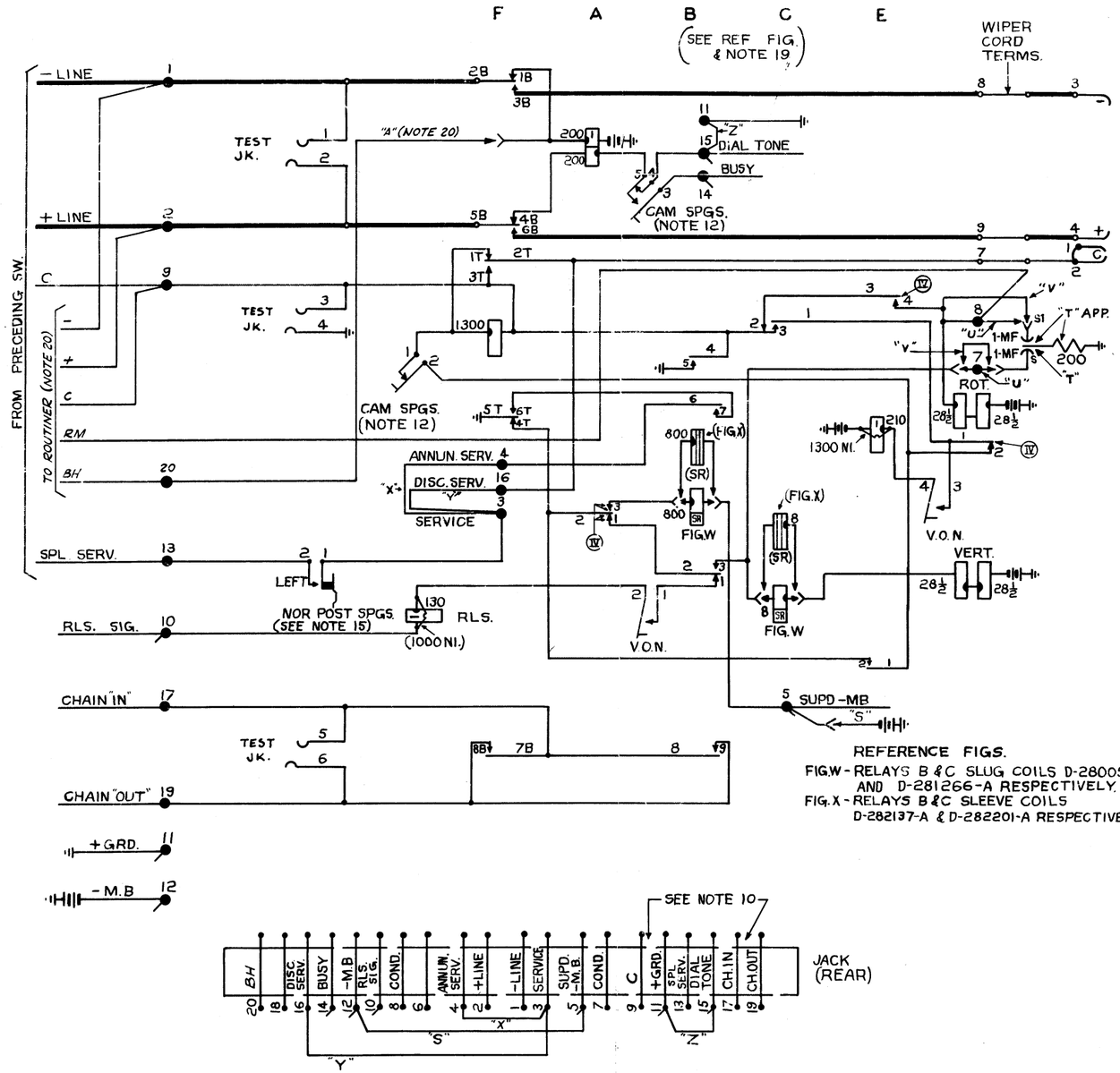

REFERENCE FIGS.

FIG.W - RELAYS B & C SLUG COILS D-280054-A AND D-281266-A RESPECTIVELY.

FIG.X - RELAYS B & C SLEEVE COILS D-282137-A & D-282201-A RESPECTIVELY.

SYMBOLS

COPPER SLEEVE ON CORE

● INDICATES INSIDE TERMINAL
(SO) SLOW TO OPERATE
(SR) SLOW TO RELEASE
JACK TERMINAL
JACK TERMINAL (COMMON TO ALL SWS.)

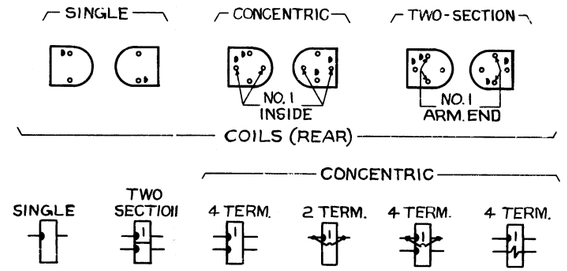

NOTES

10 - SHELF JKS. 9 & 11 & 17 & 19 MAKE CONTACT WHEN SW IS REMOVED.

11 - RLY. "E" DOES NOT OPERATE IN SERIES WITH "F".

12 - CAM SPGS. OPERATE ON 11TH ROTARY STEP.

13 - WIRE STRAP "C" FOR WATCHMAN OR ANNUNCIATOR SERVICE. WIRE STRAP "Y" FOR DISCRIMINATING SERVICE. ONLY ONE SPECIAL SERVICE CAN BE USED.

14 - LINES WHICH ARE NOT TO HAVE TRK. SERVICE MUST HAVE THE DISCRIMINATING TRK. CONT. & RLS. TRK. CONT. OF LINE SW. CONNECTED TOGETHER.

15 - NOR. POST SPGS. OPERATE ON DESIRED LEVELS.

16 - ADD STRAP "Z" ON JK. AT END OF SHELF WHEN DIAL TONE IS NOT USED.

17 - ADD STRAP "S" ON JK AT END OF SHELF WHEN SUP'D -MB IS NOT USED.

18 - TONE EQUIPMENT STARTED OVER DIAL TONE & BUSY LEADS.

19 - PRIOR TO ISSUE 4 REF. FIG. W & X WERE NOT SHOWN AFTER ISSUE 4 APPARATUS PER REFERENCE FIG. X SHALL SUPERSEDE APP. PER FIG. W.

20 - INSTALLER TO ADD "A" WRG. ON SWITCHES WIRED TO ROUTINER. ROUTINER WIRING, WHEN REQUIRED, IS USED ONLY ON THE SHELF JACK FARTHEST FROM THE BANK MULTIPLE TERMINATION.

21 - PRIOR TO ISSUE 8 "U" WIRING WAS PART OF CKT., "V" WIRING WAS NOT SHOWN AND "T" APPARATUS WAS MOUNTED ON THE SHELF. "V" WIRING SUPERSEDES "U" WIRING & "T" WIRING & APPARATUS BECOME PART OF THE SWITCH.

CHANGES	APP'D.	CHANGES	APP'D.
ISSUE NO. 5			
6-5-52 RETRACED. F.E.B. SEZ			
ISSUE: 6			
C.O.42456 CL. B 11-25-55 ADDED -+C.RM & BH LEADS & NOTE 20. SEZ SEZ	H.W.B. 11/28/55		
ISSUE 7			
C.O.53314 CL. B 7-17-57 ADDED - NOTE 21. R.K. SEZ	7-22-57		
ISSUE: 8			

RL-1471 RUNNING LIST

J. VOSS	37 551 552 572	DR. P.H.	D
APP'D. 11-23-28 B.D.W. H.B.M. O.K. 11-23-28		CHK'D A.D. 12-12-28 INDEX H.M. G.E.L.	M
SCALE:		DATE 11-6-28	

SELECTOR CIRCUIT P.A.X.
RESTRICTED SERVICE

H-51301-A ISSUE NO.

AUTOMATIC ELECTRIC COMPANY
NORTHLAKE, ILL., U.S.A.