No. 5 CROSSBAR SYSTEM FUNCTIONAL DIAGRAMS SFD-10-01

Bell Laboratories

SFD-10-01

SHEET INDEX

CONTENTS		SHEET NO	5	6	7	8	9	10	11	12	13	14
SHEET INDEX		A001	5									
		A002	5									
		A003	5									
	RESERVED	A004										
		A005	5									
		A006	5									
		A007	5									
		A008	5									
		A009	5									
		A010	5									
		A011	5									
		A012	5									
		A013	5									
		A014	5									
		A015	5									
INFORMATION NOTES	GENERAL DESCRIPTION	A101	5									
	INFORMATION NOTES	A102	5									
	SYMBOLS	A103	5									
	CONNECTING CKT INDEX	A104	5									
NO 5 CROSSBAR FLOW CHARTS		A201	5									
DOUBLE SIDED 2/X TROUBLE CARD (E5488) FLOW CHART INDEX FOR ANALYSIS		A202	5									
DOUBLE SIDED 2/X TROUBLE CARD		A203	5									
DOUBLE SIDED 1/X TROUBLE CARD (E4393) FLOW CHART INDEX FOR ANALYSIS		A204	5									
DOUBLE SIDED 1/X TROUBLE CARD		A205	5									
SINGLE SIDED 1/X TROUBLE CARD (E3638) FLOW CHART INDEX FOR ANALYSIS		A206	5									
SINGLE SIDED 1/X TROUBLE CARD		A207	5									
APPARATUS INDEX (VOLUME 1)		A301	5									
		A302	5									
		A303	5									
		A304	5									
		A305	5									
		A306	5									
		A307	5									
		A308	5									
		A309	5									
		A310	5									
		A311	5									
		A312	5									
		A313	5									
CANCELED ON DWG ISSUE 4		A314										
LEAD INDEX (VOLUME 1)		A401	5									
		A402	5									
		A403	5									
		A404	5									
		A405	5									
		A406	5									
		A407	5									
		A408	5									
		A409	5									
		A410	5									
CANCELED ON DWG ISSUE 4		A411										
APPARATUS INDEX (VOLUME 2)		A501	5									
		A502	5									
		A503	5									
		A504	5									
		A505	5									
		A506	5									
		A507	5									
		A508	5									
		A509	5									
		A510	5									

CONTENTS	SHEET NO	5	6	7	8	9	10	11	12	13	14
LEAD INDEX (VOLUME 2)	A601	5									
	A602	5									
	A603	5									
	A604	5									
	A605	5									
	A606	5									
	A607	5									
	A608	5									
APPARATUS INDEX (VOLUME 3)	A701	5									
	A702	5									
	A703	5									
	A704	5									
	A705	5									
	A706	5									
	A707	5									
	A708	5									
	A709	5									
	A710	5									
	A711	5									
	A712	5									
LEAD INDEX (VOLUME 3)	A801	5									
	A802	5									
	A803	5									
	A804	5									
	A805	5									
	A806	5									
	A807	5									
	A808	5									

DWG ISSUE	SCD ISSUE	DWG ISSUE	SCD ISSUE	DWG ISSUE	SCD ISSUE
1	1	2	2		

DWG ISSUE	SCD ISSUE	DATE ISSUED	DRAWN	APPD
3	3	2-21-76	CDI RGA	JCT DAJ THJ
4	4	1-10-77	CDI RGA	JCT DAJ THJ
5	5	4-13-78	CDI NLF	JCT DAJ RCA

SHEET INDEX NOTES

1. WHEN CHANGES ARE MADE IN THIS DRAWING, ONLY THOSE SHEETS AFFECTED WILL BE REISSUED.
2. THIS SHEET INDEX WILL BE REISSUED AND BROUGHT UP TO DATE EACH TIME ANY SHEET OF THE DRAWING IS REISSUED, OR A NEW SHEET IS ADDED.
3. THE ISSUE NUMBER ASSIGNED TO A CHANGED OR NEW SHEET WILL BE THE SAME ISSUE NUMBER AS THAT OF THE SHEET INDEX.
4. SHEETS THAT ARE NOT CHANGED WILL RETAIN THEIR EXISTING ISSUE NUMBER.
5. THE LAST ISSUE NUMBER OF THE SHEET INDEX IS RECOGNIZED AS THE LATEST ISSUE NUMBER OF THE DRAWING AS A WHOLE.

SUPPORTING INFORMATION

CATEGORY	NO

ISSUE 5

BC02

CROSSBAR SYSTEMS
NO 5

SYSTEM FUNCTIONAL DIAGRAMS

INFORMATION

BELL TELEPHONE LABORATORIES INCORPORATED

DWG. SIZE 6S

SFD-10-01-A001
1,274 SHEETS
238 OVERLAYS

PRINTED IN U.S.A.

E-7419 (9-73) K&E 19 1183 4-74 40800+

SFD-10-01-A001

SHEET INDEX

CONTENTS	SHEET NO	ISSUE NO 5	6	7	8	9	10	11	12	13	14
PART B0 - DIAL TONE TROUBLE CARD ANALYSIS	B001	4									
FLOW CHART FOR ANALYSIS OF TROUBLE CARD FOR DIAL TONE CLASS OF CALL	B002	4									
SEQUENCE CHART-DIAL TONE MARKER TROUBLE ANALYSIS	B003	4									
SEQUENCE CHART-PART 1 OF DIAL TONE MARKER	B004	5									
SEQUENCE CHART-PART 2 OF DIAL TONE MARKER	B005	4									
SEQUENCE CHART-PART 3 OF DIAL TONE MARKER	B006	4									
SEQUENCE CHART-DIAL TONE MARKER FIRST RETEST AND RECYCLE	B007	4									
SEQUENCE CHART-DIAL TONE MARKER 2ND RETEST AND ROUTE ADVANCE	B008	4									
FLOW CHART SHOWING JUNCTOR RETEST, RECYCLE, AND ROUTE ADVANCE	B009	3									
PART B1 - DIAL TONE MARKER INPUT	B101	4									
DIAL TONE MARKER PREFERENCE AND SEIZURE	B102	3									
DIAL TONE MARKER PREFERENCE AND SEIZURE	B103	3									
SEIZURE OF DIAL TONE MARKER AND INITIAL INPUT TO MARKER	B104	4									
TYPE OF ORIGINATING REGISTER INPUT TO DIAL TONE MARKER	B105	3									
MISCELLANEOUS INPUTS TO DIAL TONE MARKER AND TROUBLE RELEASE CONTROLS	B106	4									
LINE LOCATION INPUT TO MARKER	B107	4									
VERTICAL GROUP SELECTION	B108	3									
HORIZONTAL GROUP AND VERTICAL FILE SELECTION	B109	3									
MAKE-BUSY AND INDICATING LEADS	B110	4									
DIAL TONE MARKER TIMING CIRCUITS	B111	5									
LINE LOAD CONTROL	B112	4									
CANCELED ON DWG ISSUE 2	B113										
LINE LINK FRAME NUMBER AUXILIARY RELAYS	B114	4									
PART B2 - CONNECTION TO TRUNK LINK FRAME AND ORIGINATING REGISTER	B201	4									
IDLE ORIGINATING REGISTER TEST	B202	4									
TRUNK LINK FRAME SELECTION	B203	3									
TRUNK LINK FRAME SEIZURE	B204	4									
TRUNK LINK FRAME MEMORY	B205	3									
ROUTE ADVANCE AND RECYCLE	B206	4									
DIAL TONE MARKER CROSS RELAY INDICATIONS	B207	3									
ORIGINATING REGISTER SELECTION	B208	4									
ORIGINATING REGISTER SEIZURE	B209	4									
PART B3 - CONNECTION TO LINE LINK FRAME											
LINE LINK FRAME SEIZURE	B301	4									
LINE LINK FRAME SEIZURE	B302	4									
CLASS OF SERVICE INPUT TO MARKER (20,30,60 CLASSES OF SERVICE)	B303	4									
CLASS OF SERVICE INPUT TO MARKER (100 CLASSES OF SERVICE)	B304	4									
LINE LINK FRAME LOCKOUT	B305	4									
	B306	3									
PART B4 - NETWORK CONNECTION AND TRANSMISSION OF INFORMATION TO ORIGINATING REGISTER	B401	4									
JUNCTOR PATTERN UNITS CONTROL	B402	3									
JUNCTOR PATTERN TENS CONTROL	B403	3									
SEQUENCE CHART-JUNCTOR SEQUENCE CONTROL	B404	4									
JUNCTOR SEQUENCE CONTROL	B405	3									
JUNCTOR SUBGROUP SELECTION FOR 2,2-3,5,AND 10 TLF SIZES	B406	3									
JUNCTOR SUBGROUP SELECTION FOR 3,4,6,7,8,9 TLF SIZES	B407	3									
JUNCTOR SUBGROUP CONNECTOR RELAYS	B408	3									

CONTENTS	SHEET NO	ISSUE NO 5	6	7	8	9	10	11	12	13	14
CANCELED ON DWG ISSUE 2	B409										
RIGHT OR LEFT REGULAR EXTENSION, OR SECOND EXTENSION TRUNK LINK FRAME	B410	3									
JUNCTOR CONNECT RELAYS	B411	3									
DIAL TONE MARKER CHANNEL TEST CONTROL	B412	3									
SEQUENCE CHART-CONTROL OF CHANNEL SELECTION BY MASTER TEST CONTROL	B413	4									
DIAL TONE MARKER CHANNEL TEST AND SELECTION	B414	4									
DIAL TONE MARKER CHANNEL TEST AND SELECTION FAILURE TO MATCH	B415	3									
LINE LINK FRAME SELECT MAGNET OPERATION	B416	4									
TRUNK LINK FRAME SELECT MAGNET OPERATION (SD-26032-01)	B417	3									
TRUNK LINK FRAME SELECT AND HOLD MAGNET OPERATION (SD-27879-01)	B418	4									
HOLD MAGNET OPERATION	B419	4									
HOLD MAGNET TIMING AND CONTROL	B420	4									
HOLD MAGNET TIMING AND CONTROL	B421	4									
HOLD MAGNET SIMULATION AND CONTROL BY MASTER TEST CONTROL ON DT AND OR CLASS OF TEST	B422	4									
HOLD MAGNET OPERATION AND SLEEVE CHECK BY DIAL TONE MARKER	B423	4									
OPTIONAL ARRANGEMENTS OF HOLD MAGNET OPERATION AND SLEEVE CHECK BY DIAL TONE MARKER	B424	3									
DIAL TONE MARKER CONTINUITY AND FALSE CROSS AND GROUND TESTS	B425	4									
TRANSMITTAL AND INTEGRITY CHECK TO ORIGINATING REGISTER	B426	4									
TRANSMITTAL AND INTEGRITY CHECK TO ORIGINATING REGISTER	B427	4									
REGISTRATION AND MEMORY CIRCUIT CHECK	B428	3									
TRANSMITTAL AND INTEGRITY CHECK TO ORIGINATING REGISTER	B429	4									
TEST AND MONITOR INDICATIONS TO ORIGINATING REGISTER	B430	3									
NO TEST CONNECTOR	B431	3									
PART B5 - MARKER RELEASE, DIALING	B501	4									
DIAL TONE MARKER DISCONNECT CONTROL	B502	3									
ORIGINATING REGISTER DIAL TONE, DIALING PATH, AND TIP PARTY TEST	B503	5									
ORIGINATING REGISTER SEQUENCE CHART REGULAR CALL-INDIVIDUAL LINE (7 DIGITS DIALED)	B504	3									
ORIGINATING REGISTER SEQUENCE CHART "TOUCH-TONE" R PULSING	B505	3									
DIALING AND DIGIT REGISTRATION	B506	3									
DIALING AND PULSE COUNTING	B507	4									
"TOUCH-TONE" CONTROL	B508	3									
DIGIT STEERING AND REGISTRATION	B509	4									
RESERVED	B510										
ORIGINATING REGISTER COIN TEST	B511	3									
ORIGINATING REGISTER MARKER START CONTROL-PRETRANSLATOR START	B512	4									
ORIGINATING REGISTER TIMING, ALARMS, AND MISC	B513	3									
PART B6 - PRETRANSLATION	B601	3									
SEQUENCE CHART PRETRANSLATION- 7 DIGIT CALL AND 10 DIGIT CALL WITH OR WITHOUT STATIONS DELAY	B602	3									
INPUTS TO PRETRANSLATOR	B603	5									
PRETRANSLATOR PREFERENCE AND SEIZURE	B604	4									
PRETRANSLATOR PREFERENCE AND SEIZURE	B605	3									
PRETRANSLATOR CODE TRANSLATION	B606	3									
PRETRANSLATOR CODE TRANSLATION	B607	3									
PRETRANSLATOR RELEASE	B608	3									
PRETRANSLATOR RELEASE	B609	4									
CROSS CONNECTION INFORMATION	B610	3									
PRETRANSLATOR TIMING AND ALARMS	B611	5									
PART B7 - MAINTENANCE	B701	3									
SIMULATION OF DIAL TONE CALLS WHICH PRODUCE 2/X DOUBLE SIDED TROUBLE RECORD CARDS (E5488)	B702	3									
NO 5 CSBR 2/X DOUBLE SIDED TROUBLE RECORD CARD (E5488) INDICATING DESIGNATIONS WHICH MAY BE PERFORATED ON A DIAL TONE MARKER TROUBLE RECORD CARD	B703	4									
SIMULATION OF DIAL TONE CALLS WHICH PRODUCE 1/X DOUBLE SIDED TROUBLE RECORD CARDS (E4393)	B704	3									
NO 5 CSBR 1/X DOUBLE SIDED TROUBLE RECORD CARD (E4393) INDICATING DESIGNATIONS WHICH MAY BE PERFORATED ON A DIAL TONE MARKER TROUBLE RECORD CARD	B705	4									
SIMULATION OF DIAL TONE CALLS WHICH PRODUCE 1/X SINGLE SIDED TROUBLE RECORD CARDS (E3638)	B706	3									
NO 5 CSBR 1/X SINGLE SIDED TROUBLE RECORD CARD (E3638) INDICATING DESIGNATIONS WHICH MAY BE PERFORATED ON A DIAL TONE MARKER TROUBLE RECORD CARD	B707	3									
CORRELATION BETWEEN JUNCTOR GROUP, JUNCTOR STEP, AND JUNCTOR SEQUENCE SELECTION	B708	3									

ISSUE	DWG SIZE	SYSTEM FUNCTIONAL DIAGRAMS
5	6S	
SFD-10-01-	A002	BELL LABORATORIES

SFD-10-01-A002

SHEET INDEX

CONTENTS	SHEET NO	ISSUE NO 5	6	7	8	9	10	11	12	13	14
SIMULATION OF DIAL TONE CALLS WHICH PRODUCE AN AUTOMATIC TROUBLE ANALYSIS EXCEPTION REPORT	B709	3									
DIAL TONE CLASS OF TEST	B710	4									
DIAL TONE CLASS OF TEST	B711	4									
ORIGINATING REGISTER CLASS OF TEST	B712	4									
ORIGINATING REGISTER CLASS OF TEST	B713	3									
SIMULATION OF PRETRANSLATION CALLS WHICH PRODUCE 2/X DOUBLE SIDED TROUBLE RECORD CARDS (E5488)	B714	3									
NO 5 CSBR 2/X DOUBLE SIDED TROUBLE RECORD CARD (E5488) INDICATING DESIGNATIONS WHICH MAY BE PERFORATED ON A PRETRANSLATION TROUBLE RECORD CARD	B715	3									
SIMULATION OF PRETRANSLATION CALLS WHICH PRODUCE 1/X DOUBLE SIDED TROUBLE RECORD CARDS (E4393)	B716	3									
NO 5 CSBR 1/X DOUBLE SIDED TROUBLE RECORD CARD (E4393) INDICATING DESIGNATIONS WHICH MAY BE PERFORATED ON A PRETRANSLATION TROUBLE RECORD CARD	B717	3									
SIMULATION OF PRETRANSLATION CALLS WHICH PRODUCE 1/X SINGLE SIDED TROUBLE RECORD CARD (E3638)	B718	3									
NO 5 CSBR 1/X SINGLE SIDED TROUBLE RECORD CARD (E3638) INDICATING DESIGNATIONS WHICH MAY BE PERFORATED ON A PRETRANSLATION TROUBLE RECORD CARD	B719	3									
SIMULATION OF PRETRANSLATION CALLS WHICH PRODUCE AN AUTOMATIC TROUBLE ANALYSIS EXCEPTION REPORT	B720	3									
PRETRANSLATION CLASS OF TEST	B721	3									
PART CO - SUBSCRIBER OUTGOING CALL TROUBLE CARD ANALYSIS	C001	3									
FLOW CHART FOR ANALYSIS OF TROUBLE CARD FOR SUBSCRIBER OUTGOING CALL	C002	4									
SEQUENCE CHART-SUBSCRIBER OUTGOING CALL TROUBLE ANALYSIS	C003	5									
PART C1 - INPUT TO COMPLETING MARKER AND CODE TRANSLATION	C101	3									
SEQUENCE CHART-SEIZURE OF COMPLETING MARKER BY ORIGINATING REGISTER	C102	4									
RESERVED	C103										
COMPLETING MARKER PREFERENCE AND SEIZURE	C104	3									
COMPLETING MARKER PREFERENCE AND SEIZURE	C105	3									
MAKE-BUSY AND INDICATING LEADS	C106	4									
ORIGINATING REGISTER AND CONNECTOR CONTROLS	C107	4									
INPUTS TO MARKER	C108	4									
STANDING CROSS RELAY-TROUBLE INDICATIONS	C109	3									
TRANSLATOR CONTROL LEADS	C110	4									
INPUTS FROM ORIGINATING REGISTER TO MARKER	C111	3									
INPUTS FROM ORIGINATING REGISTER TO MARKER	C112	3									
INPUTS FROM ORIGINATING REGISTER TO MARKER	C113	4									
LINE LOCATION-INPUT FROM ORIGINATING REGISTER TO MARKER-TRANSMISSION TO SENDER	C114	5									
CALLED NUMBER INPUT FROM ORIGINATING REGISTER TO MARKER	C115	4									
SEQUENCE CHART-TRANSLATION, SCREENING, AND ROUTING	C116	4									
RESERVED	C117										
TRANSLATION, SCREENING, ROUTE AND ROUTE SERIES RELAY FUNCTIONS	C118	4									
TRANSLATION, SCREENING, ROUTE AND ROUTE SERIES RELAY FUNCTIONS	C119	4									
"A" DIGIT TRANSLATION	C120	4									
CODE POINTS 2 DIGIT TRANSLATION	C121	3									
CODE POINTS 3 DIGIT TRANSLATION	C122	3									
RESERVED	C123										
TYPICAL ROUTING OF CALLS	C124	3									
CLASS OF SERVICE AND SCREENING RELAY CONNECTIONS	C125	3									
CLASS OF SERVICE AND SCREENING RELAY CONNECTIONS	C126	4									
CLASS OF SERVICE AND SCREENING RELAY CONNECTIONS	C127	3									
TYPICAL ROUTE, ROUTE RELAY, AND ROUTE SERIES RELAY CROSS CONNECTIONS	C128	4									
TYPICAL ROUTE, ROUTE RELAY, AND ROUTE SERIES RELAY CROSS CONNECTIONS	C129	3									
TYPICAL ROUTE, ROUTE RELAY, AND ROUTE SERIES RELAY CROSS CONNECTIONS	C130	3									
TYPICAL ROUTE, ROUTE RELAY, AND ROUTE SERIES RELAY CROSS CONNECTIONS	C131	3									
TYPICAL ROUTE, ROUTE RELAY, AND ROUTE SERIES RELAY CROSS CONNECTIONS	C132	3									
TYPICAL ROUTE, ROUTE RELAY, AND ROUTE SERIES RELAY CROSS CONNECTIONS	C133	3									
TYPICAL ROUTE, ROUTE RELAY, AND ROUTE SERIES RELAY CROSS CONNECTIONS	C134	4									
RESERVED	C135										
COMPLETING MARKER TIMING	C136	3									
COMPLETING MARKER TIMING	C137	3									
FLOW CHART-LONG DELAY (LDT) AND SHORT DELAY (SDT) TIMING CYCLES	C138	5									
RESERVED	C139										
SEQUENCE CHART-MASTER TRAFFIC CONTROL	C140	4									
SEQUENCE CHART-MASTER TRAFFIC CONTROL	C141	4									
MASTER TRAFFIC CONTROL	C142	4									
RESERVED	C143										

CONTENTS	SHEET NO	ISSUE NO 5	6	7	8	9	10	11	12	13	14
TEST CALL DIGIT CONTROL	C144	4									
TEST CALL DIGIT CONTROL	C145	4									
RESERVED	C146										
SEQUENCE CHART-MONITORING ORIGINATING REGISTERS	C147	4									
MONITORING ORIGINATING REGISTERS	C148	3									
	C149	4									
	C150	4									
	C151	3									
	C152	4									
	C153	4									
RESERVED	C154										
MONITORING ORIGINATING REGISTERS	C155	4									
	C156	5									
PART C2 - SELECTION OF A SENDER	C201	3									
SEQUENCE CHART-SENDER SELECTION AND TIMING	C202	5									
SEQUENCE CHART-OUTSENDER TIMING (OST)	C203	4									
IDLE SENDER TEST	C204	5									
SENDER SUBGROUP SELECTION	C205	5									
SENDER CONTROL	C206	4									
SENDER CONTROL	C207	5									
CALLED NUMBER TRANSFER TO SENDER-TRANSLATION FOR NUMBER GROUP SELECTION	C208	4									
CALLED NUMBER DIGIT CHECK	C209	4									
MARKER INPUTS TO SENDER	C210	3									
MARKER INPUTS TO SENDER	C211	3									
MARKER INPUTS TO SENDER	C212	5									
OUTGOING SENDER CONTROL LEAD INTERCONNECTIONS	C213	5									
SENDER REGISTRATION TIMING	C214	5									
TRUNK GUARD TEST	C215	3									
AMA RECORDER NUMBER	C216	3									
PART C3 - CONNECTION TO TRUNK LINK FRAME AND TRUNK	C301	3									
SEQUENCE CHART-TRUNK LINK FRAME SELECTION AND TRUNK SELECTION	C302	5									
RESERVED	C303										
IDLE TRUNK TEST	C304	5									
TRUNK LINK FRAME SELECTION	C305	4									
TRUNK LINK FRAME SEIZURE	C306	4									
TRUNK LINK FRAME MEMORY	C307	4									
TRUNK SEIZURE	C308	4									
TRUNK SEIZURE	C309	5									
SENDER NO DIGIT AND TRUNK TT RELAY CONTROL	C310	3									
OPERATION OF CONTROL RELAYS IN TRUNK LINK FRAME	C311	4									
TRUNK CLASS CONTROL	C312	5									
TRUNK CHARGING	C313	3									
TRUNK SELECTION TIMING	C314	4									

SYSTEM FUNCTIONAL DIAGRAMS

DWG SIZE 6S | ISSUE 5

BELL LABORATORIES | SFD-10-01- | A003

SFD-10-01-A003

E-7481 (6-70) PRINTED IN U.S.A.

SHEET INDEX

CONTENTS	SHEET NO.	ISSUE NO. 3	4	5	6	7	8	9	10	11	12
PART C4 - CONNECTION TO LINE LINK FRAME	C401	3	4	4							
SEQUENCE CHART LINE LINK FRAME SEIZURE AND CONTROL	C402	3	4	4							
LINE LOCATION CONTROL	C403	3	4	4							
LINE LINK FRAME SEIZURE	C404	3	4	4							
LINE LINK FRAME SEIZURE	C405	3	4	4							
20,30,60 CLASSES OF SERVICE INPUT TO COMPLETING MARKER	C406	3	4	5							
100 CLASSES OF SERVICE INPUT TO COMPLETING MARKER	C407	3	4	5							
LINE LINK FRAME LOCKOUT	C408	3	3	3							
LINE LINK FRAME CONTROLS - NON PAIRED OPERATION	C409	3	4	4							
PAIRED LINE LINK FRAMES - AUXILIARY LINE LINK FRAME SEIZURE	C410	3	4	4							
PAIRED LINE LINK FRAMES - AUXILIARY LINE LINK CONTROL	C411	3	3	3							
PART C5-NETWORK CONNECTION	C501	3	4	4							
SEQUENCE CHART PREPARATION FOR CHANNEL TEST	C502	3	4	5							
SEQUENCE CHART CHANNEL SELECTION AND HOLD MAGNET OPERATION	C503	3	4	4							
JUNCTOR PATTERN UNITS CONTROL	C504	3	3	3							
JUNCTOR PATTERN TENS CONTROL	C505	3	3	3							
SEQUENCE CHART JUNCTOR SEQUENCE CONTROL	C506	3	3	3							
JUNCTOR SEQUENCE CONTROL	C507	3	3	3							
JUNCTOR SUBGROUP SELECTION FOR 2,2-3,5, AND 10 TLF SIZES	C508	3	3	3							
JUNCTOR SUBGROUP SELECTION FOR 3,4,6,7,8,9 TLF SIZES	C509	3	3	3							
JUNCTOR SUBGROUP CONNECTOR RELAYS	C510	3	3	3							
RESERVED	C511										
FLOW CHART JUNCTOR RETEST, RECYCLE, AND ROUTE ADVANCE	C512	3	3	3							
SEQUENCE CHART JUNCTOR RETEST, RECYCLE, AND ROUTE ADVANCE	C513	3	4	4							
SEQUENCE CHART JUNCTOR RETEST, RECYCLE, AND ROUTE ADVANCE	C514	3	4	4							
SEQUENCE CHART JUNCTOR RETEST, RECYCLE, AND ROUTE ADVANCE	C515	3	4	4							
RECYCLE AND ROUTE ADVANCE CONTROL	C516	3	4	4							
RECYCLE AND ROUTE ADVANCE	C517	3	4	4							
RESERVED	C518										
GROUND SUPPLY AND ROUTE ADVANCE	C519	3	4	4							
RIGHT OR LEFT, REGULAR EXTENSION, OR SECOND EXTENSION TRUNK LINK FRAME	C520	3	4	5							
JUNCTOR CONNECT RELAYS	C521	3	4	4							
COMPLETING MARKER CHANNEL TEST CONTROL	C522	3	3	3							
SEQUENCE CHART CONTROL OF CHANNEL SELECTION BY MASTER TEST CONTROL	C523	3	4	4							
COMPLETING MARKER CHANNEL TEST AND SELECTION	C524	3	4	4							
COMPLETING MARKER CHANNEL TEST AND SELECTION AND FAILURE TO MATCH	C525	3	4	4							
LINE LINK FRAME SELECT MAGNET OPERATION	C526	3	3	3							
TRUNK LINK FRAME SELECT MAGNET OPERATION (SD-26032-01)	C527	3	4	4							
TRUNK LINK FRAME SELECT AND HOLD MAGNET OPERATION (SD-27879-01)	C528	3	4	4							
HOLD MAGNET OPERATION	C529	3	4	4							
HOLD MAGNET TIMING AND CONTROL	C530	3	4	4							
HOLD MAGNET TIMING AND CONTROL	C531	3	4	4							
HOLD MAGNET SIMULATION AND CONTROL BY MASTER TEST CONTROL ON ORIG, SDR, MISC, OGT, IAO, AND ITDO CLASSES OF TEST	C532	3	4	5							
LINKAGE CHECK AND HOLD MAGNET OPERATION	C533	3	4	4							
OPTIONAL ARRANGEMENTS FOR HOLD MAGNET OPERATION	C534	3	4	4							
COMPLETING MARKER CONTINUITY AND FALSE CROSS AND GROUND TESTS	C535	3	4	5							
RESERVED	C536										
NO TEST CONNECTOR	C537	3	4	4							
PART C6 - COMPLETING MARKER RELEASE AND SENDER OPERATION	C601	3	3	3							
SEQUENCE CHART COMPLETING MARKER RELEASE	C602	3	4	4							
SEQUENCE CHART COMPLETING MARKER RELEASE	C603	3	3	3							
COMPLETING MARKER RELEASE	C604	3	4	4							
COMPLETING MARKER RELEASE	C605	3	3	3							
SEQUENCE CHART MARKER ACTION FROM FAILURES (OUTGOING)	C606	3	4	4							
COMPLETING MARKER TROUBLE RECORD CONTROL	C607	3	4	4							
RESERVED	C608										
SEQUENCE CHART REGULAR CALL MF OUTGOING SENDER	C609	3	3	3							
MF SENDER - DIGIT REGISTRATION	C610	3	3	3							
MF SENDER - DIGIT STEERING FOR OUTPULSING	C611	3	3	3							
MF SENDER - DIGIT REGISTER OUTPUT	C612	3	3	3							
MF SENDER - PULSE GENERATOR AND TIMING	C613	3	3	3							
MTC AND AMRST CONTROL OF SENDER OUTPULSING	C614	3	3	3							
SUPERVISORY CONTROL -MF OUTGOING SENDER	C615	3	4	4							
ESTABLISHED CONNECTION - OUTGOING CALL	C616	3	4	4							
ESTABLISHED CONNECTION - INCOMING CALL	C617	3	4	4							
SEQUENCE CHART REGULAR CALL DP SENDER	C618	3	3	3							
SEQUENCE CHART REGULAR CALL DP SENDER	C619	3	3	3							
DP SENDER - DIGIT REGISTRATION	C620	3	3	3							
DP SENDER - DIGIT STEERING FOR OUTPULSING	C621	3	3	3							
DP SENDER - DIGIT REGISTRATION OUTPUT	C622	3	4	4							
DP SENDER - PULSE GENERATOR, COUNTING, AND TIMING	C623	3	3	3							
DP SENDER - SUPERVISORY CONTROL	C624	3	4	4							
DP SENDER - DIGIT CONTROL	C625	3	3	3							
ESTABLISHED CONNECTION OUTGOING CALL	C626	3	4	4							
ESTABLISHED CONNECTION INCOMING CALL	C627	3	4	5							

CONTENTS	SHEET NO.	ISSUE NO. 3	4	5	6	7	8	9	10	11	12
PART C7 - OUTGOING CALL, NO SENDER	C701	3	3	3							
SEQUENCE CHARTS REVERTING CALL, OPERATOR TRUNKS, AND SERVICE CODES	C702	3	3	3							
BLOCK SCHEMATIC REVERTING CALL TRUNK CONNECTION	C703	3	3	3							
GROUNDING OF CODE POINTS	C704	3	4	4							
REVERTING RELAY OPERATION CHECK PATHS	C705	3	3	3							
PARTIAL AND TYPICAL ROUTE RELAY CROSS CONNECTION SERVICE CODES AND REVERTING CALL	C706	3	3	3							
PART C8-MAINTENANCE - OUTGOING CALL	C801	3	3	3							
SIMULATION OF OUTGOING CALLS WHICH PRODUCE 2/X DOUBLE SIDED TROUBLE RECORD CARDS (E5488)	C802	3	4	4							
NO. 5 CSBR 2/X DOUBLE SIDED TROUBLE RECORD CARD (E5488) INDICATING DESIGNATIONS WHICH MAY BE PERFORATED ON A SUBSCRIBER OUTGOING CALL	C803	3	3	3							
SIMULATION OF OUTGOING CALLS WHICH PRODUCE 1/X DOUBLE SIDED TROUBLE RECORD CARDS (E4393)	C804	3	4	4							
NO. 5 CSBR 1/X DOUBLE SIDED TROUBLE RECORD CARD (E4393) INDICATING DESIGNATIONS WHICH MAY BE PERFORATED ON A SUBSCRIBER OUTGOING CALL	C805	3	3	3							
SIMULATION OF OUTGOING CALLS WHICH PRODUCE 1/X SINGLE SIDED TROUBLE RECORD CARDS (E3638)	C806	3	3	3							
NO. 5 CSBR 1/X SINGLE SIDED TROUBLE RECORD CARD (E3638) INDICATING DESIGNATIONS WHICH MAY BE PERFORATED ON A SUBSCRIBER OUTGOING CALL	C807	3	3	3							
CORRELATION BETWEEN JUNCTOR GROUP, JUNCTOR STEP, AND JUNCTOR SEQUENCE SELECTION	C808	3	4	4							
SIMULATION OF OUTGOING CALLS WHICH PRODUCE AN AUTOMATIC TROUBLE ANALYSIS EXCEPTION REPORT	C809	3	4	4							
ORIGINATING CLASS OF MARKER TEST OUTGOING CALL WITH OR WITHOUT SENDER	C810	3	4	4							
ORIGINATING CLASS OF MARKER TEST OUTGOING CALL WITH OR WITHOUT SENDER	C811	3	3	3							
ORIGINATING CLASS OF MARKER TEST REVERTING TYPE CALL	C812	3	4	4							
RESERVED	C813										
SENDER CLASS OF TEST DP, MF SENDER	C814	3	4	4							
SENDER CLASS OF TEST DP, MF SENDER	C815	3	3	3							
OUTGOING CLASS OF TRUNK TEST	C816	3	4	4							
OUTGOING CLASS OF TRUNK TEST	C817	3	3	3							
MISC CLASS OF TRUNK TEST	C818	3	4	4							
MISC CLASS OF TRUNK TEST	C819	3	3	3							
ITDO CLASS OF TRUNK TEST	C820	3	4	4							
ITDO CLASS OF TRUNK TEST	C821	3	4	4							
TEST CALL SET-UP FOR TRUNK TRANSMISSION TESTING	C822	3	4	4							
RESERVED	C823										
TRANSMISSION TEST CIRCUITS	C824	3	3	5							
PATCH CORD DIAGRAM FOR TRUNK TRANSMISSION TESTING	C825	3	3	3							
PART D0 - TERMINATING CALL TROUBLE CARD ANALYSIS	D001	3	3	3							
FLOW CHART FOR ANALYSIS OF TROUBLE CARD FOR TERMINATING CLASS OF CALL	D002	3	4	4							
SEQUENCE CHART COMPLETING MARKER TERMINATING CALL TROUBLE ANALYSIS	D003	3	4	4							
PART D1-INCOMING TRUNK SEIZURE, INCOMING REGISTER SELECTION AND PULSING	D101	3	3	3							
SEQUENCE CHART MF INCOMING REGISTER SEIZURE AND PULSING	D102	3	4	5							
INCOMING REGISTER LINK ARRANGEMENTS	D103	3	4	4							
INCOMING REGISTER LINK TRUNK PREFERENCE	D104	3	3	3							
ARRANGEMENT OF CHAIN CIRCUITS IN AN IRL FRAME	D105	3	4	4							
INCOMING REGISTER LINK REGISTER PREFERENCE	D106	3	3	3							
INCOMING REGISTER LINK REGISTER PREFERENCE	D107	3	3	3							
REGISTRATION OF INCOMING TRUNK CLASS INFORMATION IN INCOMING REGISTER (MF)	D108	3	3	3							
REGISTRATION OF TRUNK LINK FRAME NUMBER IN INCOMING REGISTER (MF)	D109	3	4	4							
MULTIFREQUENCY OUTGOING CONNECTION PULSING AND TALKING PATH	D110	3	4	4							
MULTIFREQUENCY INCOMING CONNECTION PULSING AND TALKING PATH	D111	3	4	4							
MULTIFREQUENCY INCOMING REGISTER SEIZURE AND RECEIPT OF MF TONES	D112	3	4	5							
MULTIFREQUENCY INCOMING REGISTER DIGIT REGISTRATION AND STEERING CONTROL	D113	3	3	3							

ISSUE 5

SYSTEM FUNCTIONAL DIAGRAMS

SFD-10-01-A005

BELL TELEPHONE LABORATORIES INCORPORATED

DWG SIZE 6S

PRINTED IN U.S.A.

SFD-10-01-A005

E-7421 (10-71)

SHEET INDEX

CONTENTS	SHEET NO.	ISSUE NO. 3	4	5	6	7	8	9	10	11	12
MULTIFREQUENCY INCOMING REGISTER TIMING AND MAKE-BUSY	D114	3	4	4							
STANDING CROSS RELAY TROUBLE INDICATIONS	D115	3	3	3							
SELECTION OF INCOMING REGISTER BY AMRST	D116	3	4	4							
SELECTION OF INCOMING REGISTER BY AMRST	D117	3	4	5							
SEQUENCE CHART DIAL PULSE INCOMING REGISTER	D118	3	3	3							
SEQUENCE CHART DIAL PULSE INCOMING REGISTER	D119	3	3	3							
SEQUENCE CHART DIAL PULSE INCOMING REGISTER	D120	3	3	3							
SEQUENCE CHART DIAL PULSE INCOMING REGISTER	D121	3	3	3							
REGISTRATION OF INCOMING TRUNK CLASS INFORMATION IN INCOMING REGISTER (DP)	D122	3	3	3							
REGISTRATION OF TRUNK LINK FRAME NUMBER IN INCOMING REGISTER (DP)	D123	3	3	3							
DIAL PULSE OUTGOING CONNECTION PULSING AND TALKING PATH	D124	3	4	4							
DIAL PULSE INCOMING REGISTER PULSING AND TALKING CONNECTION	D125	3	4	4							
DIAL PULSE INCOMING REGISTER BY-LINK PULSING AND TALKING CONNECTION (SXS TO NO. 5 CSBR)	D126	3	3	3							
DIAL PULSE INCOMING REGISTER BY-LINK PULSING AND TALKING CONNECTION (SXS TO NO. 5 CSBR)	D127	3	4	5							
DIAL PULSE INCOMING REGISTER PULSE COUNTING AND TRANSLATION	D128	3	3	3							
DIAL PULSE INCOMING REGISTER DIGIT STEERING AND REGISTRATION	D129	3	3	3							
DIAL PULSE INCOMING REGISTER DISCONNECT AND TIMING CIRCUITS	D130	3	3	5							
DIAL PULSE INCOMING REGISTER MARKER START AND RELEASE	D131	3	4	4							
SEQUENCE CHART MASTER TRAFFIC CONTROL	D132	3	4	4							
SEQUENCE CHART MASTER TRAFFIC CONTROL	D133	3	4	4							
MASTER TRAFFIC CONTROL	D134	3	4	4							
PART D2-CONNECTION TO COMPLETING MARKER	D201	3	3	3							
SEQUENCE CHART COMPLETING MARKER SEIZURE BY INCOMING REGISTER	D202	3	4	4							
RESERVED	D203										
COMPLETING MARKER PREFERENCE AND SEIZURE	D204	3	3	3							
COMPLETING MARKER PREFERENCE AND SEIZURE	D205	3	3	3							
MAKE-BUSY AND INDICATING LEADS	D206	3	4	4							
INCOMING REGISTER AND CONNECTOR CONTROLS	D207	3	4	4							
REGISTRATION OF TRUNK CLASS INFORMATION IN COMPLETING MARKER	D208	3	4	5							
COMPLETING MARKER MISCELLANEOUS CONTROL RELAYS	D209	3	3	3							
INPUTS TO MARKER	D210	3	4	4							
TRUNK LINK FRAME NUMBER INPUT TO MARKER AND "A" DIGIT TRANSLATION	D211	3	4	5							
CALLED NUMBER INPUT FROM REGISTER TO MARKER	D212	3	4	4							
CALLED NUMBER TRANSFER TO SENDER-TRANSLATION FOR NUMBER GROUP SELECTION	D213	3	4	4							
COMPLETING MARKER TIMING	D214	3	4	4							
COMPLETING MARKER TIMING	D215	3	3	3							
FLOW CHART LONG DELAY (LDT) AND SHORT DELAY (SDT) TIMING CYCLES ON TERMINATING CALLS	D216	3	3	3							
TEST CALL DIGIT CONTROL	D217	3	4	4							
TEST CALL DIGIT CONTROL	D218	3	4	4							
PART D3 - CONNECTION TO TRUNK LINK FRAME	D301	3	3	3							
SEQUENCE CHART SEIZURE OF TRUNK LINK FRAME AND TRUNK	D302	3	4	4							
RESERVED	D303										
TRUNK LINK FRAME SEIZURE	D304	3	4	4							
RESERVED	D305										
TRUNK CLASS INPUT TO COMPLETING MARKER	D306	3	4	4							
OPERATION OF CONTROL RELAYS IN TRUNK LINK FRAME	D307	3	4	4							
PART D4-CONNECTION TO NUMBER GROUP	D401	3	3	3							
SEQUENCE CHART NUMBER GROUP SEIZURE AND CALLED NUMBER TRANSLATION	D402	3	4	4							
SEQUENCE CHART INTERCEPT TREATMENT	D403	3	4	4							
SEQUENCE CHART PBX ALLOTTED TERMINAL HUNTING	D404	3	4	4							
SEQUENCE CHART PBX RECYCLE	D405	3	4	4							
SEQUENCE CHART TERMINAL HUNTING NON-ALLOTTED	D406	3	4	4							
NUMBER SERIES START SELECTION	D407	3	4	4							
NUMBER GROUP START AND OFF-NORMAL CONTROL	D408	3	3	3							
NUMBER GROUP SEIZURE	D409	3	3	3							
HUNDREDS AND TENS DIGIT NUMBER GROUP INFORMATION AND TENS BLOCK SCREENING SELECTION	D410	3	3	3							
PHYSICAL,THEORETICAL,AND NUMBER GROUP CHECK	D411	3	3	5							
RESERVED	D412										

CONTENTS	SHEET NO.	ISSUE NO. 3	4	5	6	7	8	9	10	11	12
UNITS DIGIT CONTROL	D413	3	3	3							
NUMBER GROUP TRANSLATION	D414	3	4	5							
RINGING COMBINATION CONTROL AND VERIFICATION BY TEST FRAME	D415	3	4	4							
LINE VERIFICATION MATCH	D416	3	4	4							
LINE LOCATION CONTROL	D417	3	3	5							
NUMBER GROUP RELEASE CONTROL	D418	3	3	3							
BLANK NUMBER,INTERCEPT,AND PBX RECYCLE	D419	3	3	3							
PBX ALLOTTER CONTROL,NUMBER GROUP CONTROL APPLIQUE FOR USE WITH ALLOTTED PBX HUNTING	D420	3	3	3							
PBX ALLOTTER; HUNDREDS AND TENS DIGIT IDENTIFIER	D421	3	4	4							
PBX ALLOTTER; NUMBER GROUP SELECTION	D422	3	3	3							
PBX ALLOTTER; THOUSANDS DIGIT IDENTIFIER	D423	3	3	3							
PBX HUNTING	D424	3	4	5							
NUMBER GROUP CONTROL APPLIQUE FOR USE WITH PBX HUNTING	D425	3	4	4							
LINE VERIFICATION TEST SLEEVE VERIFICATION	D426	3	4	5							
PART D5-CONNECTION TO LINE LINK FRAME	D501	3	3	3							
SEQUENCE CHART LINE LINK FRAME SEIZURE AND CONTROL	D502	3	4	4							
RESERVED	D503										
LINE LINK FRAME SEIZURE	D504	3	4	4							
LINE LINK FRAME SEIZURE	D505	3	4	4							
RESERVED	D506										
LINE LINK FRAME CONTROLS NON-PAIRED OPERATION	D507	3	4	4							
PAIRED LINE LINK FRAMES AUXILIARY LINE LINK FRAME SEIZURE	D508	3	4	4							
PAIRED LINE LINK FRAMES AUXILIARY LINE LINK CONTROL	D509	3	3	3							
20,30,60 CLASSES OF SERVICE LINE VERIFICATION TEST AND INPUT TO COMPLETING MARKER	D510	3	4	4							
100 CLASSES OF SERVICE LINE VERIFICATION TEST AND INPUT TO COMPLETING MARKER	D511	3	4	5							
PART D6 - NETWORK CONNECTION	D601	3	3	3							
SEQUENCE CHART PREPARATION FOR CHANNEL TEST	D602	3	4	4							
SEQUENCE CHART CHANNEL SELECTION,LINKAGE CHECK, AND RINGING SWITCH CONTROL	D603	3	4	4							
JUNCTOR PATTERN UNITS CONTROL	D604	3	3	3							
JUNCTOR PATTERN TENS CONTROL	D605	3	4	4							
SEQUENCE CHART JUNCTOR SEQUENCE CONTROL	D606	3	3	3							
JUNCTOR SEQUENCE CONTROL	D607	3	3	3							
JUNCTOR SUBGROUP SELECTION FOR 2,2-3,5,AND 10 TLF SIZES	D608	3	3	3							
JUNCTOR SUBGROUP SELECTION FOR 3,4,6,7,8,9 TLF SIZES	D609	3	3	3							
JUNCTOR SUBGROUP CONNECTOR RELAYS	D610	3	3	3							
RESERVED	D611										
RIGHT OR LEFT,REGULAR EXTENSION,OR SECOND EXTENSION TRUNK LINK FRAME	D612	3	4	5							
JUNCTOR CONNECT RELAYS	D613	3	4	4							
COMPLETING MARKER CHANNEL TEST CONTROL	D614	3	3	3							
SEQUENCE CHART CONTROL OF CHANNEL SELECTION BY MASTER TEST CONTROL	D615	3	4	4							
COMPLETING MARKER CHANNEL TEST AND SELECTION	D616	3	4	4							
COMPLETING MARKER CHANNEL TEST AND SELECTION AND FAILURE TO MATCH	D617	3	4	4							
LINE LINK FRAME SELECT MAGNET OPERATION	D618	3	3	3							
TRUNK LINK FRAME SELECT MAGNET OPERATION (SD-26032-01)	D619	3	4	4							
TRUNK LINK FRAME SELECT AND HOLD MAGNET OPERATION (SD-27879-01)	D620	3	4	4							
HOLD MAGNET OPERATION	D621	3	4	4							
HOLD MAGNET TIMING AND CONTROL	D622	3	4	4							
HOLD MAGNET TIMING AND CONTROL	D623	3	4	4							
HOLD MAGNET SIMULATION AND CONTROL BY MASTER TEST CONTROL ON INC AND MLV CLASSES OF TEST	D624	3	4	4							
LINKAGE CHECK AND HOLD MAGNET OPERATION	D625	3	4	4							
OPTIONAL ARRANGEMENTS FOR HOLD MAGNET OPERATION	D626	3	4	4							
COMPLETING MARKER CONTINUITY AND FALSE CROSS AND GROUND TESTS	D627	3	4	4							
RINGING SWITCH CONTROL	D628	3	4	4							
RINGING SWITCH CONTROL	D629	3	4	4							
RINGING SWITCH CONTROL	D630	3	4	4							
NO TEST CONNECTOR	D631	3	4	4							
PART D7 - COMPLETING MARKER RELEASE, RINGING CALLED SUBSCRIBER AND DISCONNECT	D701	3	3	3							
SEQUENCE CHART COMPLETING MARKER RELEASE	D702	3	4	4							
SEQUENCE CHART COMPLETING MARKER RELASE	D703	3	3	3							
COMPLETING MARKER RELEASE	D704	3	4	4							
COMPLETING MARKER RELEASE	D705	3	4	4							
RINGING AND TALKING PATH	D706	3	4	5							
SEQUENCE CHART RINGING AND SUBSCRIBER DISCONNECT	D707	3	3	3							
SEQUENCE CHART MARKER ACTION FROM FAILURES (INCOMING)	D708	3	4	4							
COMPLETING MARKER TROUBLE RECORD CONTROL	D709	3	4	4							
PART D8 - SPECIAL MARKER OPERATIONS	D801	3	3	3							
SEQUENCE CHART SPECIAL CALLS	D802	3	3	3							
SEQUENCE CHART NO TEST TRAIN	D803	3	4	4							
MTC AND CM PREFERENCE AND SEIZURE	D804	3	4	4							
INCOMING TRUNK AND RINGING SWITCH CONTROL	D805	3	4	4							

ISSUE 5

SFD-10-01-A006

SYSTEM FUNCTIONAL DIAGRAMS

DWG SIZE 6S

BELL TELEPHONE LABORATORIES INCORPORATED

PRINTED IN U. S. A.

E-7481-L (4-72)

SFD-10-01-A006

SHEET INDEX

CONTENTS	SHEET NO.	ISSUE NO. 3	4	5	6	7	8	9	10	11	12
LINE IDLE AND LINE BUSY TESTS	D806	3	4	4							
RESERVED	D807										
NO TEST CONTROL	D808	3	4	4							
CHANNEL SELECTION	D809	3	3	3							
PART D9 - MAINTENANCE - INCOMING CALL	D901	3	3	3							
SIMULATION OF INCOMING CALLS WHICH PRODUCE 2/X DOUBLE SIDED TROUBLE RECORD CARDS (E5488)	D902	3	3	3							
NO. 5 CSBR DOUBLE SIDED 2/X TROUBLE RECORD CARD (E5488) INDICATING DESIGNATIONS WHICH MAY BE PERFORATED ON A TERMINATING CALL	D903	3	4	4							
SIMULATION OF INCOMING CALLS WHICH PRODUCE 1/X DOUBLE SIDED TROUBLE RECORD CARDS (E4393)	D904	3	3	3							
NO. 5 CSBR DOUBLE SIDED 1/X TROUBLE RECORD CARD (E4393) INDICATING DESIGNATIONS WHICH MAY BE PERFORATED ON A TERMINATING CALL	D905	3	4	4							
SIMULATION OF INCOMING CALLS WHICH PRODUCE 1/X SINGLE SIDED TROUBLE RECORD CARDS (E3638)	D906	3	3	3							
NO. 5 CSBR SINGLE SIDED 1/X TROUBLE RECORD CARD (E3638) INDICATING DESIGNATIONS WHICH MAY BE PERFORATED ON A TERMINATING CALL	D907	3	4	4							
CORRELATION BETWEEN JUNCTOR GROUP, JUNCTOR STEP, AND JUNCTOR SEQUENCE SELECTION	D908	3	3	3							
SIMULATION OF INCOMING CALLS WHICH PRODUCE AN AUTOMATIC TROUBLE ANALYSIS EXCEPTION REPORT	D909	3	3	3							
INCOMING CLASS OF MARKER TEST	D910	3	4	4							
INCOMING CLASS OF MARKER TEST	D911	3	4	4							
SUBSCRIBER LINE CLASS OF TEST	D912	3	4	5							
MARKER LINE VERIFICATION TEST (MLV)	D913	3	3	3							
INCOMING REGISTER CLASS OF TEST DP, MF REGISTER	D914	3	4	4							
INCOMING TRUNK TEST - NO PULSING (ITNP)	D915	3	4	4							
PART E0-INTRAOFFICE CALL TROUBLE CARD ANALYSIS	E001			5							
FLOW CHART FOR ANALYSIS OF TROUBLE CARD FOR INTRAOFFICE CALL	E002			5							
RESERVED	E003										
SEQUENCE CHART-INTRAOFFICE CALL TROUBLE ANALYSIS (FLG)	E004			5							
SEQUENCE CHART-INTRAOFFICE CALL TROUBLE ANALYSIS (SCB)	E005			5							
PART E1-INPUT TO COMPLETING MARKER AND CODE TRANSLATION	E101			5							
SEQUENCE CHART-SEIZURE OF COMPLETING MARKER BY ORIGINATING REGISTER	E102			5							
RESERVED	E103										
COMPLETING MARKER PREFERENCE AND SEIZURE	E104			5							
COMPLETING MARKER PREFERENCE AND SEIZURE	E105			5							
MAKE-BUSY AND INDICATING LEADS	E106			5							
ORIGINATING REGISTER AND CONNECTOR CONTROLS	E107			5							
INPUTS TO MARKER	E108			5							
STANDING CROSS RELAY TROUBLE INDICATIONS	E109			5							
TRANSLATOR CONTROL LEADS	E110			5							
INPUTS FROM ORIGINATING REGISTER TO MARKER	E111			5							
INPUTS FROM ORIGINATING REGISTER TO MARKER	E112			5							
INPUTS FROM ORIGINATING REGISTER TO MARKER	E113			5							
LINE LOCATION-INPUT FROM ORIG REG TO MKR-TRANSMISSION TO SENDER	E114			5							
CALLED NUMBER INPUT FROM ORIGINATING REGISTER TO MARKER	E115			5							
TRANSLATION, SCREENING, ROUTE AND ROUTE SERIES RELAY FUNCTIONS	E116			5							
TRANSLATION, SCREENING, ROUTE AND ROUTE SERIES RELAY FUNCTIONS	E117			5							
"A" DIGIT TRANSLATION	E118			5							
CODE POINTS 2 DIGIT TRANSLATION	E119			5							
CODE POINTS 3 DIGIT TRANSLATION	E120			5							
CHECK GROUND, TL AND LL CONTROL, AND SLEEVE RELEASE CHECK	E121			5							
TYPICAL ROUTING OF CALLS	E122			5							
CLASS OF SERVICE AND SCREENING RELAY CONNECTIONS	E123			5							
CLASS OF SERVICE AND SCREENING RELAY CONNECTIONS	E124			5							
CLASS OF SERVICE AND SCREENING RELAY CONNECTIONS	E125			5							
TYPICAL ROUTE, ROUTE RELAY AND ROUTE SERIES RELAY CROSS CONNECTIONS	E126			5							
TYPICAL ROUTE, ROUTE RELAY AND ROUTE SERIES RELAY CROSS CONNECTIONS	E127			5							
TYPICAL ROUTE, ROUTE RELAY AND ROUTE SERIES RELAY CROSS CONNECTIONS	E128			5							
TYPICAL ROUTE, ROUTE RELAY AND ROUTE SERIES RELAY CROSS CONNECTIONS	E129			5							
TYPICAL ROUTE, ROUTE RELAY AND ROUTE SERIES RELAY CROSS CONNECTIONS	E130			5							
TYPICAL ROUTE, ROUTE RELAY AND ROUTE SERIES RELAY CROSS CONNECTIONS	E131			5							
TYPICAL ROUTE, ROUTE RELAY AND ROUTE SERIES RELAY CROSS CONNECTIONS	E132			5							
CALLED NUMBER TRANSFER-TRANSLATION FOR NUMBER GROUP SELECTION	E133			5							
COMPLETING MARKER TIMING	E134			5							
COMPLETING MARKER TIMING	E135			5							
FLOW CHART-LONG DELAY (LDT) AND SHORT DELAY (SDT) TIMING CYCLES ON IAO CALLS	E136			5							

CONTENTS	SHEET NO.	ISSUE NO. 3	4	5	6	7	8	9	10	11	12
RESERVED	E137										
SEQUENCE CHART-MASTER TRAFFIC CONTROL	E138			5							
SEQUENCE CHART-MASTER TRAFFIC CONTROL	E139			5							
MASTER TRAFFIC CONTROL	E140			5							
RESERVED	E141										
TEST CALL DIGIT CONTROL	E142			5							
TEST CALL DIGIT CONTROL	E143			5							
PART E2-CONNECTION TO TRUNK LINK AND TRUNK SELECT	E201			5							
SEQUENCE CHART-TRUNK LINK FRAME AND TRUNK SELECTION	E202			5							
RESERVED	E203										
IDLE TRUNK TEST	E204			5							
TRUNK LINK FRAME SELECTION	E205			5							
TRUNK LINK FRAME SEIZURE	E206			5							
TRUNK LINK FRAME MEMORY	E207			5							
TRUNK SEIZURE	E208			5							
TRUNK SEIZURE	E209			5							
TRUNK SELECTION TIMING	E210			5							
OPERATION OF CONTROL RELAYS IN TRUNK LINK FRAME	E211			5							
TRUNK CLASS CONTROL	E212			5							
PART E3 - CONNECTION TO NUMBER GROUP	E301			5							
SEQUENCE CHART-NUMBER GROUP SEIZURE AND CALLED NUMBER TRANSLATION	E302			5							
RESERVED	E303										
RESERVED	E304										
NUMBER SERIES START SELECTION	E305			5							
NUMBER GROUP START AND OFF-NORMAL CONTROL	E306			5							
NUMBER GROUP SEIZURE	E307			5							
HUNDREDS & TENS DIGIT NUMBER GROUP INFORMATION & TENS BLOCK SCREENING SELECTION	E308			5							
PHYSICAL, THEORETICAL, AND NUMBER GROUP CHECK	E309			5							
RESERVED	E310										
UNITS DIGIT CONTROL	E311			5							
NUMBER GROUP TRANSLATION	E312			5							
RINGING COMBINATION CONTROL AND VERIFICATION BY TEST FRAME	E313			5							
LINE VERIFICATION MATCH	E314			5							
LINE LOCATION CONTROL	E315			5							
NUMBER GROUP RELEASE CONTROL	E316			5							
BLANK NUMBER, INTERCEPT, AND PBX RECYCLE	E317			5							
PART E4-CONNECTION TO LINE LINK (FLG)	E401			5							
SEQUENCE CHART-CONNECTION TO LINE LINK (FLG)	E402			5							
RESERVED	E403										
LINE LINK FRAME SEIZURE	E404			5							
LINE LINK FRAME SEIZURE	E405			5							
RESERVED	E406										
LINE LINK FRAME CONTROLS NON-PAIRED OPERATION	E407			5							
PAIRED LINE LINK FRAMES AUXILIARY LINE LINK FRAME SEIZURE	E408			5							
PAIRED LINE LINK FRAMES AUXILIARY LINE LINK CONTROL	E409			5							
20, 30, 60 CLASSES OF SERVICE LINE VERIFICATION TEST AND INPUT TO COMPLETING MARKER	E410			5							
100 CLASSES OF SERVICE LINE VERIFICATION TEST AND INPUT TO COMPLETING MARKER	E411			5							

ISSUE 5

SYSTEM FUNCTIONAL DIAGRAMS

SFD-10-01-A007

BELL TELEPHONE LABORATORIES INCORPORATED

DWG SIZE 6S

PRINTED IN U.S.A.

SFD-10-01-A007

E-7421 (10-71)

SHEET INDEX

ISSUE	DWG SIZE	SYSTEM FUNCTIONAL DIAGRAMS
5	6S	

SFD-10-01- A008 BELL LABORATORIES

SFD-10-01-A008

SHEET INDEX

CONTENTS	SHEET NO	ISSUE NO 5	6	7	8	9	10	11	12	13	14
PART F1 - INPUT TO CALLING COMPLETING MARKER AND CODE TRANSLATION (F101 IS REFERENCE INDEX TO EXISTING PAGES)	F101	5									
PART F2 - SELECTION AND CONTROL OF INTERMARKER GROUP SENDER	F201	5									
SEQUENCE CHART-INTERMARKER GROUP SENDER SELECTION AND TIMING	F202	5									
RESERVED	F203										
IDLE SENDER TEST	F204	5									
SENDER SUBGROUP SELECTION	F205	5									
SENDER SELECTION,CONTROL,AND CONNECTION TO TRUNK	F206	5									
SENDER CONTROL AND OPERATION OF INDIVIDUAL AND COMMON CHANNELS	F207	5									
SENDER CONTROL AND TRUNK LINK FRAME REGISTRATION FOR CALLED MARKER GROUP-20 TLF	F208	5									
SENDER CONTROL AND TRUNK LINK FRAME REGISTRATION FOR CALLED MARKER GROUP-30 TLF	F209	5									
CALLED NUMBER TRANSFER TO IMG SENDER - TRANSLATION FOR NUMBER GROUP SELECTION	F210	5									
CALLED NUMBER DIGIT CHECK	F211	5									
MARKER AMA INPUTS TO SENDER	F212	5									
MARKER AMA INPUTS TO SENDER	F213	5									
AMA RECORDER NUMBER	F214	5									
SENDER REGISTRATION TIMING	F215	5									
PART F3 - CONNECTION TO TRUNK LINK,LINE LINK,AND NETWORK CONNECTION - CALLING MARKER GROUP	F301	5									
RESERVED	F302										
CONNECTION TO TRUNK LINK FRAME AND TRUNK-CALLING MARKER GROUP (F303 IS REFERENCE INDEX TO EXISTING PAGES)	F303	5									
RESERVED	F304										
CONNECTION TO LINE LINK FRAME-CALLING MARKER GROUP (F305 IS REFERENCE INDEX TO EXISTING PAGES)	F305	5									
RESERVED	F306										
NETWORK CONNECTION-CALLING MARKER GROUP (F307 IS REFERENCE INDEX TO EXISTING PAGES)	F307	5									
PART F4 - CALLING COMPLETING MARKER RELEASE,INTERMARKER GROUP SENDER STORAGE AND CONTROL	F401	5									
SEQUENCE CHART-CALLING COMPLETING MARKER RELEASE	F402	5									
SEQUENCE CHART-CALLING COMPLETING MARKER RELEASE	F403	5									
CALLING COMPLETING MARKER RELEASE	F404	5									
CALLING COMPLETING MARKER RELEASE	F405	5									
SEQUENCE CHART-MARKER ACTION FROM FAILURES-CALLING MARKER GROUP	F406	5									
COMPLETING MARKER TROUBLE RECORD CONTROL	F407	5									
RESERVED	F408										
SEQUENCE CHART-INTERMARKER GROUP SENDER SUBSCRIBER TO SUBSCRIBER	F409	5									
INTERMARKER GROUP SENDER CALLED DIGIT REGISTRATION AND INPUT TO CALLED COMPLETING MARKER	F410	5									
INTERMARKER GROUP SENDER CONTROL	F411	5									
RESERVED	F412										
INTERMARKER GROUP SENDER TIMING	F413	5									
TRUNK LINK IDENTIFICATION-20 TLF CALLED MARKER GROUP	F414	5									
TRUNK LINK IDENTIFICATION-30 TLF CALLED MARKER GROUP	F415	5									
ESTABLISHING INTERMARKER GROUP CONNECTION-CALLING MARKER GROUP	F416	5									
ESTABLISHING INTERMARKER GROUP CONNECTION-CALLED MARKER GROUP	F417	5									
PART F5 - SEIZURE OF CALLED COMPLETING MARKER BY INTERMARKER GROUP SENDER	F501	5									
SEQUENCE CHART-COMPLETING MARKER SEIZURE BY INTERMARKER GROUP SENDER	F502	5									
RESERVED	F503										
CALLED COMPLETING MARKER PREFERENCE AND SEIZURE	F504	5									
CALLED COMPLETING MARKER PREFERENCE AND SEIZURE	F505	5									
MAKE-BUSY AND INDICATING LEADS	F506	5									
INTERMARKER GROUP SENDER AND CONNECTOR CONTROLS	F507	5									
REGISTRATION OF CLASS INFORMATION IN CALLED COMPLETING MARKER	F508	5									
RESERVED	F509										
INPUTS TO CALLED MARKER	F510	5									
COMPLETING MARKER MISCELLANEOUS CONTROL RELAYS	F511	5									
TRUNK LINK FRAME IDENTIFICATION CALLED MARKER-20 TLF CALLED MARKER GROUP	F512	5									
TRUNK LINK FRAME IDENTIFICATION CALLED MARKER-30 TLF CALLED MARKER GROUP	F513	5									
NUMBER GROUP AND C DIGIT TRANSLATION	F514	5									
CALLED NUMBER INPUT FROM IMG SENDER TO CALLED MARKER-TRANSLATION FOR NUMBER GROUP SELECTION	F515	5									

CONTENTS	SHEET NO	ISSUE NO 5	6	7	8	9	10	11	12	13	14
PART F6 - CONNECTION TO TRUNK LINK,NUMBER GROUP,LINE LINK,NETWORK CONNECTION,AND MARKER RELEASE-CALLED MARKER GROUP	F601	5									
RESERVED	F602										
CONNECTION TO TRUNK LINK FRAME-CALLED MARKER GROUP (F603 IS REFERENCE INDEX TO EXISTING PAGES)	F603	5									
RESERVED	F604										
CONNECTION TO NUMBER GROUP-CALLED MARKER GROUP (F605 IS REFERENCE INDEX TO EXISTING PAGES)	F605	5									
RESERVED	F606										
CONNECTION TO LINE LINK FRAME-CALLED MARKER GROUP (F607 IS REFERENCE INDEX TO EXISTING PAGES)	F607	5									
RESERVED	F608										
NETWORK CONNECTION-CALLED MARKER GROUP (F609 IS REFERENCE INDEX TO EXISTING PAGES)	F609	5									
RESERVED	F610										
CALLED COMPLETING MARKER RELEASE,RINGING CALLED SUBSCRIBER,AND DISCONNECT (F611 IS REFERENCE INDEX TO EXISTING PAGES)	F611	5									
PART F7 - MAINTENANCE-INTERMARKER GROUP CALL	F701	5									
SIMULATION OF INTERMARKER GROUP CALLS WHICH PRODUCE 2/X DOUBLE SIDED TROUBLE RECORD CARDS (E5488)	F702	5									
NO 5 CSBR 2/X DOUBLE SIDED TROUBLE RECORD CARD (E5488) INDICATING DESIGNATIONS WHICH MAY BE PERFORATED ON INTERMARKER GROUP CALL	F703	5									
SIMULATION OF INTERMARKER GROUP CALLS WHICH PRODUCE 1/X DOUBLE SIDED TROUBLE RECORD CARDS (E4393)	F704	5									
NO 5 CSBR 1/X DOUBLE SIDED TROUBLE RECORD CARD (E4393) INDICATING DESIGNATIONS WHICH MAY BE PERFORATED ON AN INTERMARKER GROUP CALL	F705	5									
SIMULATION OF INTERMARKER GROUP CALLS WHICH PRODUCE 1/X SINGLE SIDED TROUBLE RECORD CARDS (E3638)	F706	5									
NO 5 CSBR 1/X SINGLE SIDED TROUBLE RECORD CARD (E3638) INDICATING DESIGNATIONS WHICH MAY BE PERFORATED ON AN INTERMARKER GROUP CALL.	F707	5									
CORRELATION BETWEEN JUNCTOR GROUP,JUNCTOR STEP,AND JUNCTOR SEQUENCE SELECTION	F708	5									
SIMULATION OF INTERMARKER GROUP CALLS WHICH PRODUCE AN AUTOMATIC TROUBLE ANALYSIS EXCEPTION REPORT	F709	5									
INTERMARKER GROUP SENDER (IMS) CLASS OF TEST-SUBSCRIBER TO SUBSCRIBER-CALLING MARKER GROUP	F710	5									
INTERMARKER GROUP SENDER (IMS) CLASS OF TEST-SUBSCRIBER TO SUBSCRIBER-CALLING MARKER GROUP	F711	5									
INTERMARKER GROUP TRUNK TEST-SUBSCRIBER TO SUBSCRIBER-CALLING MARKER GROUP	F712	5									
INTERMARKER GROUP TRUNK TEST-SUBSCRIBER TO SUBSCRIBER-CALLING MARKER GROUP	F713	5									
PART G0 - TANDEM CALL-TROUBLE CARD ANALYSIS	G001	5									
FLOW CHART FOR ANALYSIS OF TROUBLE CARD FOR TANDEM CALL	G002	5									
TROUBLE ANALYSIS SEQUENCE CHART TANDEM CALL	G003	5									

SYSTEM FUNCTIONAL DIAGRAMS

DWG SIZE 6S | ISSUE 5

BELL LABORATORIES | SFD-10-01- | A009

E-7481 (6-79) PRINTED IN U.S.A.

SFD-10-01-A009

SHEET INDEX

CONTENTS	SHEET NO	ISSUE NO 5	6	7	8	9	10	11	12	13	14
PART G1 - INCOMING TANDEM TRUNK SEIZURE, INCOMING REGISTER SELECTION AND PULSING	G101	5									
SEQUENCE CHART-MF INCOMING REGISTER SEIZURE AND PULSING	G102	5									
INCOMING REGISTER LINK ARRANGEMENTS	G103	5									
INCOMING REGISTER LINK TRUNK PREFERENCE	G104	5									
ARRANGEMENT OF CHAIN CIRCUITS IN AN IRL FRAME (ALL TEN REGISTERS EQUIPPED WITH ONLY ONE IRL FRAME IN LINK GROUP)	G105	5									
INCOMING REGISTER LINK-REGISTER PREFERENCE	G106	5									
INCOMING REGISTER LINK-REGISTER PREFERENCE	G107	5									
REGISTRATION OF INCOMING TRUNK CLASS INFORMATION IN INCOMING REGISTER (MF)	G108	5									
REGISTRATION OF TRUNK LINK FRAME NUMBER IN INCOMING REGISTER (MF)	G109	5									
REGISTRATION OF TRUNK NUMBER IN INCOMING REGISTER (MF)	G110	5									
REGISTRATION OF TRUNK NUMBER IN INCOMING REGISTER (MF)	G111	5									
REGISTRATION OF TRUNK NUMBER IN INCOMING REGISTER (MF)	G112	5									
RESERVED	G113										
MULTIFREQUENCY OUTGOING CONNECTION PULSING AND TALKING PATH DISTANT ORIGINATING OFFICE	G114	5									
MULTIFREQUENCY INCOMING TANDEM CONNECTION PULSING AND TALKING PATH	G115	5									
MULTIFREQUENCY INCOMING REGISTER SEIZURE AND RECEIPT OF MULTIFREQUENCY TONES	G116	5									
MULTIFREQUENCY INCOMING REGISTER DIGIT REGISTRATION AND STEERING CONTROL	G117	5									
INCOMING REGISTER TIMING AND MAKE-BUSY	G118	5									
STANDING CROSS RELAY TROUBLE INDICATIONS	G119	5									
SELECTION OF INCOMING REGISTER BY AMRST	G120	5									
SELECTION OF INCOMING REGISTER BY AMRST	G121	5									
SEQUENCE CHART-DIAL PULSE INCOMING REGISTER	G122	5									
SEQUENCE CHART-DIAL PULSE INCOMING REGISTER	G123	5									
SEQUENCE CHART-DIAL PULSE INCOMING REGISTER	G124	5									
SEQUENCE CHART-DIAL PULSE INCOMING REGISTER	G125	5									
REGISTRATION OF INCOMING TRUNK CLASS INFORMATION IN INCOMING REGISTER (DP)	G126	5									
REGISTRATION OF TRUNK LINK FRAME NUMBER IN INCOMING REGISTER (DP)	G127	5									
REGISTRATION OF TRUNK NUMBER IN INCOMING REGISTER (DP)	G128	5									
REGISTRATION OF TRUNK NUMBER IN INCOMING REGISTER (DP)	G129	5									
REGISTRATION OF TRUNK NUMBER IN INCOMING REGISTER (DP)	G130	5									
RESERVED	G131										
DIAL PULSE OUTGOING CONNECTION PULSING AND TALKING PATH-DISTANT ORIGINATING OFFICE	G132	5									
DIAL PULSE INCOMING TANDEM CONNECTION PULSING AND TALKING PATH	G133	5									
DIAL PULSE INCOMING REGISTER BYLINK PULSING AND TALKING CONNECTION (SXS TO NO 5 CROSSBAR)	G134	5									
DIAL PULSE INCOMING REGISTER BYLINK PULSING AND TALKING CONNECTION (SXS TO NO 5 CROSSBAR)	G135	5									
DIAL PULSE INCOMING REGISTER PULSE COUNTING AND TRANSLATION	G136	5									
DIAL PULSE INCOMING REGISTER DIGIT STEERING AND REGISTRATION	G137	5									
DIAL PULSE INCOMING REGISTER-DISCONNECT AND TIMING CIRCUITS	G138	5									
DIAL PULSE INCOMING REGISTER-MARKER START AND RELEASE	G139	5									
SEQUENCE CHART-MASTER TRAFFIC CONTROL	G140	5									
SEQUENCE CHART-MASTER TRAFFIC CONTROL	G141	5									
MASTER TRAFFIC CONTROL	G142	5									
PART G2 - CONNECTION TO COMPLETING MARKER	G201	5									
SEQUENCE CHART-COMPLETING MARKER SEIZURE BY INCOMING REGISTER	G202	5									
RESERVED	G203										
COMPLETING MARKER PREFERENCE AND SEIZURE	G204	5									
COMPLETING MARKER PREFERENCE AND SEIZURE	G205	5									
MAKE-BUSY AND INDICATING LEADS	G206	5									
INCOMING REGISTER AND CONNECTOR CONTROLS	G207	5									
REGISTRATION OF TRUNK CLASS INFORMATION IN COMPLETING MARKER	G208	5									
COMPLETING MARKER MISCELLANEOUS CONTROL RELAYS	G209	5									
INPUTS TO MARKER	G210	5									
TRUNK LINK FRAME NUMBER INPUT TO MARKER AND "A" DIGIT TRANSLATION	G211	5									
CALLED NUMBER INPUT FROM REGISTER TO MARKER	G212	5									
CALLED NUMBER TRANSFER TO SENDER	G213	5									
REGISTRATION OF HUNDREDS NUMBER IN COMPLETING MARKER (MF REGISTER)	G214	5									

CONTENTS	SHEET NO	ISSUE NO 5	6	7	8	9	10	11	12	13	14
REGISTRATION OF TENS NUMBER IN COMPLETING MARKER (MF INC REGISTER)	G215	5									
REGISTRATION OF HUNDREDS NUMBER IN COMPLETING MARKER (DP REGISTER)	G216	5									
REGISTRATION OF TENS NUMBER IN COMPLETING MARKER (DP REGISTER)	G217	5									
REGISTRATION OF UNITS DIGIT IN COMPLETING MARKER	G218	5									
TEST CALL DIGIT CONTROL	G219	5									
TEST CALL DIGIT CONTROL	G220	5									
PART G3 - SELECTION OF A SENDER (G301 IS REFERENCE INDEX TO EXISTING PAGES)	G301	5									
PART G4 - CONNECTION TO TRUNK LINK FRAME AND TRUNK (G401 IS REFERENCE INDEX TO EXISTING PAGES)	G401	5									
PART G5 - CONNECTION TO NUMBER GROUP	G501	5									
SEQUENCE CHART-NUMBER GROUP SEIZURE AND CALLED NUMBER TRANSLATION	G502	5									
SEQUENCE CHART-INTERCEPT TREATMENT	G503	5									
NUMBER GROUP START AND OFF-NORMAL CONTROL	G504	5									
NUMBER GROUP SEIZURE	G505	5									
HUNDREDS AND TENS DIGIT REGISTRATION AND TENS BLOCK SCREENING SELECTION	G506	5									
UNITS REGISTRATION IN NUMBER GROUP	G507	5									
PHYSICAL, THEORETICAL AND NUMBER GROUP CHECK	G508	5									
NUMBER GROUP TRANSLATION OF TRUNK NUMBER TO LINE LOCATION AND TRUNK NUMBER CHECK	G509	5									
LINE LOCATION CONTROL	G510	5									
NUMBER GROUP RELEASE CONTROL	G511	5									
BLANK NUMBER, INTERCEPT AND RE-ORDER	G512	5									
PART G6 - CONNECTION TO LINE LINK FRAME (G601 IS REFERENCE INDEX TO EXISTING PAGES)	G601 *	5									
PART G7 - NETWORK CONNECTION (G701 IS REFERENCE INDEX TO EXISTING PAGES)	G701	5									
PART G8 - COMPLETING MARKER RELEASE AND SENDER OPERATION	G801	5									
SEQUENCE CHART-COMPLETING MARKER RELEASE	G802	5									
SEQUENCE CHART-COMPLETING MARKER RELEASE	G803	5									
COMPLETING MARKER RELEASE	G804	5									
COMPLETING MARKER RELEASE	G805	5									
SEQUENCE CHART-MARKER ACTION FROM FAILURES (OUTGOING)	G806	5									
COMPLETING MARKER TROUBLE RECORD CONTROL	G807	5									
SEQUENCE CHART-MARKER ACTION FROM FAILURES	G808	5									
SEQUENCE CHART-REGULAR CALL MF OUTGOING SENDER	G809	5									
MF SENDER-DIGIT REGISTRATION	G810	5									
MF SENDER-DIGIT STEERING FOR OUTPULSING	G811	5									
MF SENDER-DIGIT REGISTER OUTPUT	G812	5									
MF SENDER-PULSE GENERATOR AND TIMING	G813	5									
MTC AND AMRST CONTROL OF SENDER OUTPULSING	G814	5									
SUPERVISORY CONTROL-MF OUTGOING SENDER	G815	5									
ESTABLISHED CONNECTION-TANDEM CALL-PULSING AND TALKING PATH (MF)	G816	5									
ESTABLISHED CONNECTION-INCOMING CALL-TERMINATING OFFICE	G817	5									
SEQUENCE CHART-REGULAR CALL DP SENDER	G818	5									
SEQUENCE CHART-REGULAR CALL DP SENDER	G819	5									
DP SENDER-DIGIT REGISTRATION	G820	5									
DP SENDER-DIGIT STEERING FOR OUTPULSING	G821	5									
DP SENDER-DIGIT REGISTRATION OUTPUT	G822	5									
DP SENDER-PULSE GENERATOR, COUNTING, AND TIMING	G823	5									
DP SENDER-SUPERVISORY CONTROL	G824	5									
DP SENDER-DIGIT CONTROL	G825	5									
ESTABLISHED CONNECTION-TANDEM CALL-PULSING AND TALKING PATH (DP)	G826	5									
ESTABLISHED CONNECTION-INCOMING CALL-TERMINATING OFFICE	G827	5									

ISSUE 5	DWG SIZE 6S	SYSTEM FUNCTIONAL DIAGRAMS
SFD-10-01-	A010	BELL LABORATORIES

SFD-10-01-A010

SHEET INDEX

CONTENTS	SHEET NO	ISSUE NO 5	6	7	8	9	10	11	12	13	14
PART G9 - MAINTENANCE-TANDEM CALL	G901	5									
SIMULATION OF TANDEM CALLS WHICH PRODUCE 2/X DOUBLE SIDED TROUBLE RECORD CARDS	G902	5									
NO 5 CSBR 2/X DOUBLE SIDED TROUBLE RECORD CARD (E5488) INDICATING DESIGNATIONS WHICH MAY BE PERFORATED ON A TANDEM CALL	G903	5									
SIMULATION OF TANDEM CALLS WHICH PRODUCE 1/X DOUBLE SIDED TROUBLE RECORD CARDS	G904	5									
NO 5 CSBR 1/X DOUBLE SIDED TROUBLE RECORD CARD (E4393) INDICATING DESIGNATIONS WHICH MAY BE PERFORATED ON A TANDEM CALL	G905	5									
SIMULATION OF TANDEM CALLS WHICH PRODUCE 1/X SINGLE SIDED TROUBLE RECORD CARDS	G906	5									
NO 5 CSBR 1/X SINGLE SIDED TROUBLE RECORD CARD (E3638) INDICATING DESIGNATIONS WHICH MAY BE PERFORATED ON A TANDEM CALL	G907	5									
SIMULATION OF TANDEM CALLS WHICH PRODUCE AN AUTOMATIC TROUBLE ANALYSIS EXCEPTION REPORT	G908	5									
CORRELATION BETWEEN JUNCTOR GROUP, JUNCTOR STEP AND JUNCTOR SEQUENCE SELECTION	G909	5									
TANDEM CLASS OF MARKER TEST	G910	5									
TANDEM CLASS OF MARKER TEST	G911	5									
INCOMING TRUNK-TANDEM CLASS OF TEST	G912	5									
OUTGOING TRUNK-TANDEM CLASS OF TEST	G913	5									
PART J0 - BLOCK FLOW CHARTS-TEST FROM MAINTENANCE CENTER	J001	5									
FLOWCHARTS FOR ANALYSIS OF TROUBLE CARDS	J002	5									
RESERVED	J003										
BLOCK FLOW CHARTS-MARKER AND PRETRANSLATOR CLASS OF TEST	J004	5									
BLOCK FLOW CHARTS-REGISTER AND SENDER TESTS	J005	5									
BLOCK FLOW CHARTS-TRUNK TESTS, SUBSCRIBER LINE TEST AND MARKER LINE VERIFICATION TEST	J006	5									
BLOCK FLOW CHARTS-TRUNK TESTS	J007	5									
BLOCK FLOW CHARTS-TRUNK TESTS, SUBSCRIBER LINE TEST AND MARKER LINE VERIFICATION TEST	J008	5									
BLOCK FLOW CHARTS-PROGRESSIVE MONITORING	J009	5									
BLOCK FLOW CHARTS-MONITORING OR, IR AND OS	J010	5									
BLOCK FLOW CHARTS-MONITORING PARTICULAR OR, IR AND OS	J011	5									
PART J1 - INDEX-MTC AND MTFC SEIZURE	J101	5									
SEQUENCE CHART-MTC AND MTFC SEIZURE	J102	5									
MTC-TEST START AND RELEASE	J103	5									
MTC-TEST CLASS SELECTION-SWITCHES	J104	5									
MTC-TEST CLASS SELECTION-KEYS	J105	5									
MTC-CLASS OF TEST LAMPS AND AUXILIARY TEST CLASS RELAYS	J106	5									
MTC-TEST CONTROL RELAYS	J107	5									
MTFC-PREFERENCE CIRCUIT FOR TROUBLE RECORDING, TESTING AND MONITORING (SD-25805-01)	J108	5									
	J109	5									
	J110	5									
	J111	5									
MTFC-PREFERENCE CIRCUIT FOR TROUBLE RECORDING, TESTING AND MONITORING (SD-27718-01)	J112	5									
	J113	5									
	J114	5									
	J115	5									
RESERVED	J116										
MTFC-TEST START, MAKE-BUSY AND IDLE INDICATING LEADS	J117	5									
MTFC-MARKER, PRETRANSLATOR AND TRANSVERTER SELECTION RELAYS	J118	5									
TEST CONNECTOR RELAYS	J119	5									
MTFC-CONNECTOR RELAYS (CM)	J120	5									
MTFC-CONNECTOR RELAYS (DTM)	J121	5									
MTFC-TROUBLE RECORDER START	J122	5									
MTC-PREFERENCE	J123	5									
PROGRESS AND IDENTIFICATION LAMP CONTROL	J124	5									
PART K0-MARKER/PRETRANSLATOR CLASS OF TESTS	K001	5									
MTC KEYS AND/OR SWITCHES MARKER/PRETRANSLATOR CLASS OF TESTS	K002	5									
MTC KEYS AND/OR SWITCHES MARKER/PRETRANSLATOR CLASS OF TESTS	K003	5									
FLOW CHART-MARKER TIMING (DT CLASS)	K004	5									

CONTENTS	SHEET NO	ISSUE NO 5	6	7	8	9	10	11	12	13	14
FLOW CHART-MARKER TIMING (ORIG CLASS)	K005	5									
FLOW CHART-MARKER TIMING (INC CLASS)	K006	5									
TROUBLE ANALYSIS SEQUENCE CHART-(DT CLASS)	K007	5									
TROUBLE ANALYSIS SEQUENCE CHART-(ORIG CLASS)	K008	5									
TROUBLE ANALYSIS SEQUENCE CHART-(INC CLASS)	K009	5									
PART K1 - MARKER INPUT	K101	5									
SEQUENCE CHART-MARKER INPUT DT CLASS OF TEST	K102	5									
SEQUENCE CHART-MARKER INPUT ORIG/INC CLASS OF TEST	K103	5									
MASTER TEST CONTROL CHECK	K104	5									
MASTER TEST CONTROL CHECK	K105	5									
SEIZURE OF DIAL TONE MARKER AND INITIAL INPUT TO MARKER	K106	5									
MISC INPUTS TO MARKER AND TROUBLE RELEASE CONTROLS	K107	5									
LINE LINK FRAME INPUTS TO DIAL TONE MARKER	K108	5									
LINE LINK FRAME INPUT TO COMPLETING MARKER	K109	5									
VERTICAL GROUP INPUT TO DIAL TONE MARKER	K110	5									
VERTICAL GROUP INPUT TO COMPLETING MARKER	K111	5									
HORIZONTAL GROUP INPUT TO DIAL TONE MARKER	K112	5									
HORIZONTAL GROUP AND VERTICAL FILE INPUT TO COMPLETING MARKER	K113	5									
RESERVED	K114										
MAKE-BUSY AND INDICATING LEADS	K115	5									
REGISTRATION OF TRUNK CLASS INFORMATION IN COMPLETING MARKER	K116	5									
MISC INPUTS TO COMPLETING MARKER	K117	5									
MISC INPUTS TO COMPLETING MARKER	K118	5									
MISC INPUTS TO COMPLETING MARKER	K119	5									
CALLED NUMBER INPUT TO COMPLETING MARKER A- AND B- DIGITS	K120	5									
CALLED NUMBER INPUT TO COMPLETING MARKER C- AND D- DIGITS	K121	5									
CALLED NUMBER INPUT TO COMPLETING MARKER E- THROUGH G- DIGITS	K122	5									
CALLED NUMBER INPUT TO COMPLETING MARKER H- THROUGH L- DIGITS	K123	5									
COIN, PERMANENT SIGNAL AND PARTIAL DIAL INPUTS TO COMPLETING MARKER	K124	5									
CLASS OF SERVICE INPUTS TO COMPLETING MARKER	K125	5									
RESERVED	K126										
TRUNK LINK FRAME INPUT TO COMPLETING MARKER	K127	5									
MARKER TIMING	K128	5									
MARKER TIMING	K129	5									
PART K2 - SENDER SELECTION	K201	5									
SEQUENCE CHART-SENDER SELECTION	K202	5									
IDLE SENDER TEST	K203	5									
SENDER SUBGROUP SELECTION	K204	5									
SENDER CONTROL	K205	5									
SENDER CONTROL	K206	5									
CALLED NUMBER TRANSFER TO SENDER	K207	5									
SENDER NO DIGIT AND TRUNK TT RELAY CONTROL	K208	5									

SYSTEM FUNCTIONAL DIAGRAMS

DWG SIZE 6S | ISSUE 5

BELL LABORATORIES | SFD-10-01- | A011

SFD-10-01-A011

E-7481 (6-79) PRINTED IN U.S.A.

SHEET INDEX

CONTENTS	SHEET NO	ISSUE NO 5	6	7	8	9	10	11	12	13	14
PART K3 - TRUNK LINK SELECTION AND TRUNK SEIZURE	K301	5									
SEQUENCE CHART-TRUNK LINK SELECTION AND TRUNK SEIZURE (DT/ORIG CLASS)	K302	5									
SEQUENCE CHART-TRUNK LINK SEIZURE AND TRUNK SIMULATION (INC CLASS)	K303	5									
IDLE ORIGINATING REGISTER TEST	K304	5									
IDLE TRUNK TEST (ORIG CLASS)	K305	5									
TRUNK LINK FRAME SEIZURE (DT CLASS)	K306	5									
TRUNK LINK FRAME SEIZURE (ORIG/INC CLASS)	K307	5									
RESERVED	K308										
TRUNK LINK FRAME MEMORY	K309	5									
ORIGINATING REGISTER SELECTION	K310	5									
TRUNK SELECTION (ORIG CLASS)	K311	5									
ORIGINATING REGISTER SEIZURE	K312	5									
TRUNK SEIZURE (ORIG CLASS)	K313	5									
TRUNK CHARGING (ORIG CLASS)	K314	5									
RESERVED	K315										
TRUNK CLASS INPUT TO COMPLETING MARKER (INC CLASS)	K316	5									
OPERATION OF CONTROL RELAYS IN TRUNK LINK FRAME	K317	5									
PART K4 - NUMBER GROUP CONNECTION AND TRANSLATION	K401	5									
SEQUENCE CHART-NUMBER GROUP CONNECTION AND TRANSLATION	K402	5									
TRANSLATION FOR NUMBER GROUP SELECTION	K403	5									
RESERVED	K404										
NUMBER SERIES START SELECTION	K405	5									
NUMBER GROUP START AND OFF-NORMAL CONTROL	K406	5									
NUMBER GROUP SEIZURE	K407	5									
NUMBER GROUP RELEASE	K408	5									
RINGING COMBINATION SELECTION	K409	5									
RESERVED	K410										
PBX SLEEVE CONTROL	K411	5									
NO TEST CONTROL	K412	5									
BLANK NUMBER, INTERCEPT, AND PBX RECYCLE	K413	5									
MISCELLANEOUS INPUTS TO NUMBER GROUP	K414	5									
PART K5 - LINE LINK SEIZURE	K501	5									
SEQUENCE CHART-LINE LINK SEIZURE (DT CLASS)	K502	5									
SEQUENCE CHART-LINE LINK SEIZURE (ORIG/INC CLASS)	K503	5									
LINE LINK FRAME NUMBER AUXILIARY RELAYS	K504	5									
CHECK OF LL INPUT TO CM	K505	5									
LINE LINK FRAME INPUTS TO COMPLETING MARKER	K506	5									
VERTICAL GROUP INPUT TO COMPLETING MARKER	K507	5									
VERTICAL FILE AND HORIZONTAL GROUP INPUTS TO COMPLETING MARKER	K508	5									
RESERVED	K509										
LINE LINK FRAME SEIZURE	K510	5									
LINE LINK FRAME SEIZURE	K511	5									
VERTICAL FILE INPUT TO DIAL TONE MARKER	K512	5									
CHECK OF HORIZONTAL GROUP SELECTION	K513	5									
PAIRED LINE LINK FRAMES AUXILIARY LINE LINK FRAME SEIZURE	K514	5									
LINE LINK FRAME CONTROLS	K515	5									
CLASS OF SERVICE INPUT TO MARKER (20,30,60 CLASSES OF SERVICE) DT CLASS	K516	5									
CLASS OF SERVICE INPUT TO MARKER (100 CLASSES OF SERVICE) DT CLASSES	K517	5									
CLASS OF SERVICE INPUT TO MARKER (20,30,60 CLASSES OF SERVICE) ORIG AND INC CLASS	K518	5									

CONTENTS	SHEET NO	ISSUE NO 5	6	7	8	9	10	11	12	13	14
CLASS OF SERVICE INPUT TO MARKER (100 CLASSES OF SERVICE) ORIG AND INC CLASS	K519	5									
LINE LINK FRAME LOCKOUT	K520	5									
PART K6 - NETWORK CONNECTION	K601	5									
SEQUENCE CHART-NETWORK CONNECTION	K602	5									
SEQUENCE CHART-NETWORK CONNECTION	K603	5									
DIAL TONE MARKER CHANNEL TEST AND SELECTION FAILURE TO MATCH	K604	5									
COMPLETING MARKER CHANNEL TEST AND SELECTION AND FAILURE TO MATCH	K605	5									
RECYCLE AND ROUTE ADVANCE CONTROL	K606	5									
RECYCLE AND ROUTE ADVANCE CONTROL	K607	5									
DIAL TONE/COMPLETING MARKER CHANNEL TEST CONTROL	K608	5									
RIGHT OR LEFT, REGULAR, EXTENSION, OR SECONDARY EXTENSION TRUNK LINK FRAME	K609	5									
RESERVED	K610										
CHECK OF REGISTER MEMORY CIRCUIT	K611	5									
HOLD MAGNET TIMING AND CONTROL	K612	5									
HOLD MAGNET TIMING AND CONTROL	K613	5									
HOLD MAGNET SIMULATION AND CONTROL	K614	5									
NO TEST CONNECTOR	K615	5									
HOLD MAGNET OPERATION AND SLEEVE CHECK BY DIAL TONE MARKER	K616	5									
HOLD MAGNET OPERATION AND SLEEVE CHECK BY COMPLETING MARKER	K617	5									
DIAL TONE MARKER CHANNEL TEST AND SELECTION	K618	5									
COMPLETING MARKER CHANNEL TEST AND SELECTION	K619	5									
DIAL TONE MARKER CONTINUITY AND FALSE CROSS AND GROUND TEST	K620	5									
COMPLETING MARKER CONTINUITY AND FALSE CROSS AND GROUND TEST	K621	5									
SIMULATED RINGING SELECTION SWITCH	K622	5									
TRUNK CHARGING	K623	5									
MASTER TEST CONTROL	K624	5									
PART K7 - MARKER DISCONNECT AND TEST FRAME RESTORED	K701	5									
SEQUENCE CHART-SEIZURE OF TROUBLE RECORDER	K702	5									
SEQUENCE CHART-MARKER DISCONNECT (DT CLASS)	K703	5									
SEQUENCE CHART-MARKER DISCONNECT (ORIG CLASS)	K704	5									
SEQUENCE CHART-MARKER DISCONNECT (INC CLASS)	K705	5									
SEQUENCE CHART-TEST FRAME RESTORED TO NORMAL	K706	5									
TROUBLE RECORD CONTROL	K707	5									
DISCONNECT CONTROL (DT CLASS)	K708	5									
RESERVED	K709										
DISCONNECT CONTROL (ORIG/INC CLASS)	K710	5									
DISCONNECT CONTROL (ORIG/INC CLASS)	K711	5									
TIMING CONTROL (DT CLASS)	K712	5									
TIMING CONTROL (ORIG/INC CLASS)	K713	5									
PART K8 - PRETRANSLATOR CLASS OF TEST	K801	5									
SEQUENCE CHART-PRETRANSLATOR CLASS OF TEST	K802	5									
SEQUENCE CHART-PRETRANSLATOR CLASS OF TEST	K803	5									
INPUTS TO PRETRANSLATOR	K804	5									
RESERVED	K805										
PRETRANSLATOR CODE TRANSLATION	K806	5									
PRETRANSLATOR CODE TRANSLATION	K807	5									
PRETRANSLATOR ALARMS	K808	5									
CROSS CONNECTING INFORMATION	K809	5									
PRETRANSLATOR RELEASE	K810	5									

ISSUE	DWG SIZE	SYSTEM FUNCTIONAL DIAGRAMS
5	6S	
SFD-10-01-	A012	BELL LABORATORIES

SFD-10-01-A012

SHEET INDEX

SYSTEM FUNCTIONAL DIAGRAMS

DWG SIZE 6S | ISSUE 5

BELL LABORATORIES | SFD-10-01- | A013

E-7481 (6-79) PRINTED IN U.S.A.

SFD-10-01-A013

SHEET INDEX

CONTENTS	SHEET NO	ISSUE NO 5	6	7	8	9	10	11	12	13	14
PART M1 - INTRAOFFICE CLASS OF TRUNK TEST	M101	5									
TEST FRAME SET-UP-IAO CLASS OF TEST	M102	5									
RESERVED	M103										
SEQUENCE CHART-IAO CLASS OF TEST	M104	5									
SEQUENCE CHART-IAO CLASS OF TEST	M105	5									
SEQUENCE CHART-IAO CLASS OF TEST	M106	5									
RESERVED	M107										
IAO TRUNK TEST ESTABLISHED TEST CONNECTION ON MTF	M108	5									
IAO TRUNK TEST ESTABLISHED TEST CONNECTION ON MTF	M109	5									
RINGING SWITCH CONNECTION IAO CALL	M110	5									
PART M2 - MISC CLASS OF TRUNK TEST	M201	5									
TEST FRAME SET-UP-MISC CLASS OF TRUNK TEST	M202	5									
TEST FRAME SET-UP-MISC CLASS OF TRUNK TEST	M203	5									
SEQUENCE CHART-MISC CLASS OF TRUNK TEST (MISC)	M204	5									
SEQUENCE CHART-MISC CLASS OF TRUNK TEST (MISC)	M205	5									
SEQUENCE CHART-MISC CLASS OF TRUNK TEST (MISC)	M206	5									
RESERVED	M207										
MISC TRUNK TEST-ESTABLISHED TEST CORRECTION ON MTF	M208	5									
MISC TRUNK TEST-ESTABLISHED TEST CONNECTION ON MTF	M209	5									
MISC TRUNK TEST-ESTABLISHED LOOP-AROUND TEST CONNECTION	M210	5									
MISC TRUNK TEST-ESTABLISHED LOOP-AROUND TEST CONNECTION	M211	5									
TRANSMISSION TEST CIRCUIT	M212	5									
PATCH CORD DIAGRAM-TRUNK TRANSMISSION TESTING	M213	5									
PART M3 - ITDO CLASS OF TRUNK TEST	M301	5									
TEST FRAME SET UP-ITDO CLASS OF TRUNK TEST	M302	5									
TEST FRAME SET UP-ITDO CLASS OF TRUNK TEST	M303	5									
SEQUENCE CHART-ITDO CLASS OF TRUNK TEST	M304	5									
SEQUENCE CHART-ITDO CLASS OF TRUNK TEST	M305	5									
SEQUENCE CHART-ITDO CLASS OF TRUNK TEST	M306	5									
RESERVED	M307										
ITDO TRUNK TEST-ESTABLISHED TEST CONNECTION ON MTF	M308	5									
ITDO TRUNK TEST-ESTABLISHED TEST CONNECTION ON MTF	M309	5									
PART M4 - ITNP CLASS OF TRUNK TEST	M401	5									
TEST FRAME SET-UP-ITNP CLASS OF TRUNK TEST	M402	5									
RESERVED	M403										
SEQUENCE CHART-ITNP CLASS OF TRUNK TEST	M404	5									
SEQUENCE CHART-ITNP CLASS OF TRUNK TEST	M405	5									
SEQUENCE CHART-ITNP CLASS OF TRUNK TEST	M406	5									
RESERVED	M407										
ITNP TRUNK TEST-ESTABLISHED TEST CONNECTION MTF	M408	5									
ITNP TRUNK TEST-ESTABLISHED TEST CONNECTION MTF	M409	5									
RINGING SWITCH CONNECTION-INCOMING CALL	M410	5									
PART M5 - INTERMARKER GROUP TRUNK TEST-IAO CLASS OF TEST	M501	5									
TEST FRAME SET UP-INTERMARKER GROUP TRUNK TEST	M502	5									
RESERVED	M503										
SEQUENCE CHART-INTERMARKER GROUP TRUNK TEST-IAO CLASS OF TEST	M504	5									
SEQUENCE CHART-INTERMARKER GROUP TRUNK TEST-IAO CLASS OF TEST	M505	5									
SEQUENCE CHART-INTERMARKER GROUP TRUNK TEST-IAO CLASS OF TEST	M506	5									

CONTENTS	SHEET NO	ISSUE NO 5	6	7	8	9	10	11	12	13	14
RESERVED	M507										
INTERMARKER GROUP TRUNK TEST-ESTABLISHED TEST CONNECTION ON MTF	M508	5									
INTERMARKER GROUP TRUNK TEST-ESTABLISHED TEST CONNECTION ON MTF	M509	5									
RINGING SWITCH CONNECTION INTERMARKER GROUP CALL	M510	5									
PART M6 - OUTGOING TRUNK (TANDEM) TRUNK TEST-OUTGOING TRUNK CLASS OF TRUNK TEST	M601	5									
TEST FRAME SET UP-OUTGOING TRUNK (TANDEM) CLASS OF TEST	M602	5									
TEST FRAME SET UP-OUTGOING TRUNK (TANDEM) CLASS OF TEST	M603	5									
SEQUENCE CHART-OUTGOING TRUNK (TANDEM) CLASS OF TEST	M604	5									
SEQUENCE CHART-OUTGOING TRUNK (TANDEM) CLASS OF TEST	M605	5									
RESERVED	M606										
SEQUENCE CHART-OUTGOING TRUNK (TANDEM) CLASS OF TEST	M607	5									
OUTGOING TRUNK (TANDEM) CLASS OF TRUNK TEST-ESTABLISHED TEST CONNECTION ON MTF	M608	5									
OUTGOING TRUNK (TANDEM) CLASS OF TRUNK TEST-ESTABLISHED TEST CONNECTION ON MTF	M609	5									
PART M7 - INCOMING (TANDEM) TRUNK TEST-ITNP CLASS OF TRUNK TEST	M701	5									
TEST FRAME SETUP-ITNP CLASS OF TRUNK TEST (ITT)	M702	5									
RESERVED	M703										
SEQUENCE CHART-INCOMING TRUNK NO-PULSING CLASS OF TRUNK TEST (ITT)	M704	5									
SEQUENCE CHART-INCOMING TRUNK NO-PULSING CLASS OF TRUNK TEST (ITT)	M705	5									
SEQUENCE CHART-INCOMING TRUNK NO-PULSING CLASS OF TRUNK TEST (ITT)	M706	5									
RESERVED	M707										
INCOMING (TANDEM) TRUNK TEST-ITNP CLASS OF TRUNK TEST ESTABLISHED TEST CONN MTF	M708	5									
INCOMING (TANDEM) TRUNK TEST-ITNP CLASS OF TRUNK TEST ESTABLISHED TEST CONN MTF	M709	5									
PART N0 - SUBSCRIBER LINE CLASS OF TEST	N001	5									
TEST FRAME SET-UP-SUBSCRIBER LINE CLASS OF TEST	N002	5									
RESERVED	N003										
SEQUENCE CHART-SUBSCRIBER LINE CLASS OF TEST	N004	5									
SEQUENCE CHART-SUBSCRIBER LINE CLASS OF TEST	N005	5									
SEQUENCE CHART-VOLTMETER TESTS SUBSCRIBER LINES OR TRUNKS	N006	5									
RESERVED	N007										
SUBSCRIBER LINE CLASS OF TEST-ESTABLISHED CONN TO VOLTMETER	N008	5									
VOLTMETER TEST ON SUBSCRIBER LINES OR TRUNKS	N009	5									
MASTER TEST FRAME TELEPHONE CIRCUIT CONN AND CONTROL	N010	5									
PART N1 - MARKER LINE VERIFICATION TEST	N101	5									
TEST FRAME SET-UP-MARKER LINE VERIFICATION TEST (MLV)	N102	5									
RESERVED	N103										
SEQUENCE CHART-MLV CLASS OF TEST	N104	5									
SEQUENCE CHART-MLV CLASS OF TEST	N105	5									
SEQUENCE CHART-MLV CLASS OF TEST	N106	5									
LINE VERIFICATION MATCH OR MISMATCH COMMON CONTROL RELAYS	N107	5									
NUMBER GROUP TRANSLATION	N108	5									
LINE VERIFICATION MATCH	N109	5									
LINE LOCATION CONTROL	N110	5									
20,30,60 CLASSES OF SERVICE LINE VERIFICATION TEST AND INPUT TO COMPLETING MARKER	N111	5									
100 CLASSES OF SERVICE LINE VERIFICATION TEST AND INPUT TO COMPLETING MARKER	N112	5									

ISSUE	DWG SIZE	SYSTEM FUNCTIONAL DIAGRAMS
5	6S	
SFD-10-01-	A014	BELL LABORATORIES

SFD-10-01-A014

SHEET INDEX

CONTENTS	SHEET NO	ISSUE NO 5	6	7	8	9	10	11	12	13	14

SYSTEM FUNCTIONAL DIAGRAMS

DWG SIZE 6S

ISSUE 5

BELL LABORATORIES SFD-10-01- A015

SFD-10-01-A015

GENERAL DESCRIPTION OF SFD-10-01

A MAJOR OBJECTIVE OF SFD-10-01 IS TO PORTRAY, IN SIMPLE FORM, THE SYSTEM SERVICE FUNCTIONS OF THE BASIC NO 5 CROSSBAR OFFICE, WIRE SPRING MARKER GROUP, WHICH PROVIDES POTS (PLAIN OLD TELEPHONE SERVICE). A FURTHER OBJECTIVE IS TO CORRELATE SERVICE FUNCTIONS WITH THE MAINTENANCE FACILITIES WHICH HAVE BEEN PROVIDED TO AID IN DETECTING, ANALYZING, LOCATING, AND CLEARING TROUBLE CONDITIONS.

SFD-10-01 IS DIVIDED INTO A NUMBER OF SECTIONS, EACH OF WHICH EXCEPT FOR SECTION "A", DESCRIBES A SPECIFIC JOB PREFORMED BY NO 5 CROSSBAR. EACH SECTION IS DIVIDED INTO PARTS WHICH DESCRIBE THE MAJOR STEPS OR OPERATIONS THROUGH WHICH THE SYSTEM PROCEEDS TO PERFORM THE JOB.

SD VERSES SFD

THE TWO SKETCHES SHOWN BELOW ARE USED TO ILLUSTRATE THE SD AND SFD METHODS OF SHOWING THE GROUNDING OF THE OR LEAD. AS ILLUSTRATED, THE SD ARRANGEMENT SHOWS ALL POSSIBLE OPTIONS WHEREAS THE SFD SHOWS A SIMPLIFIED, LESS OPTIONAL PATH. WHERE COMPLEX CIRCUITRY IS INVOLVED, IT MAY BE NECESSARY FOR THE MAINTENANCE PERSON TO REFER TO THE SD DRAWING.

STANDARD SD ARRANGEMENT (OR CKT)

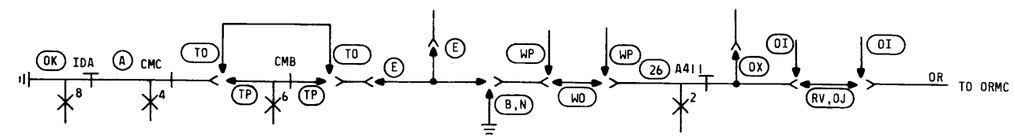

OPTIONS USED IN SFD	SD APPARATUS/ WIRING	CIRCUIT NOTES
✓	26	NUMBERING PLAN AREA TRANSLATOR (MD 45D).
✓	A,E,WO	REQUIRED FOR PRETRANSLATION OF REGULAR OR REGULAR AND IDDD CODES
	B,N,WP	PRETRANSLATORS NOT REQUIRED.
	OI,OJ,OK,OX	IDDD REQUIRED.
✓	RV	IDDD NOT REQUIRED.
	TO	WHERE THE REGISTER IS NOT ARRANGED FOR PRT AND.
		INTERCHANGEABLE NPA AND LOCAL AREA CODE.
✓	TP	WHERE THE REGISTER IS ARRANGED FOR PRT AND
		INTERCHANGEABLE NPA AND LOCAL AREA CODE.

SFD ARRANGEMENT

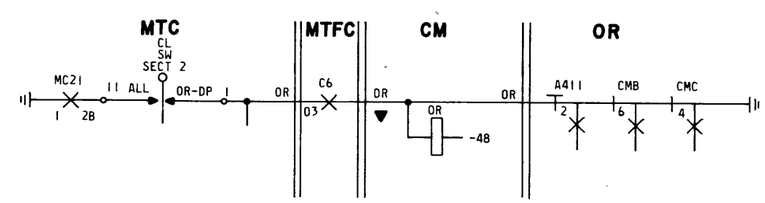

GENERAL DESCRIPTION	DWG SIZE 6S	ISSUE 5
BELL LABORATORIES SFD-10-01-		A101

SFD-10-01-A101

INFORMATION NOTES

CONTACTS IN PARENTHESIS

PARENTHESIS ARE USED AROUND CONTACTS TO ALERT THE USER THAT AN OPTIONAL ARRANGEMENT EXISTS. THE CONTACT ARRANGEMENT SHOWN IN SFD-10-01 ISSUE 4, IS THE ARRANGEMENT MOST LIKELY PROVIDED IN THE MAJORITY OF NO. 5 CSBR OFFICES.

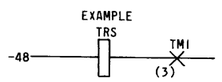

RELAYS IN PARENTHESIS

PARENTHESIS ARE USED AROUND RELAY DESIGNATIONS TO ALERT THE USER THAT AN OPTIONAL ARRANGEMENT EXISTS. THE RELAY DESIGNATION SHOWN IN SFD-10-01 ISSUE 4, IS THE RELAY MOST LIKELY PROVIDED IN THE MAJORITY OF NO. 5 CSBR OFFICES.

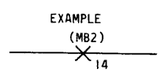

NUMEROUS OR COMPLEX CONTACT ARRANGEMENT

WHEN CONTACTS ARE TOO NUMEROUS OR THE ARRANGEMENT TOO COMPLEX, A LOWER CASE LETTER AND NOTE DIRECT THE USER TO THE SCHEMATIC DRAWING FOR THE CONTACT ARRANGEMENT.

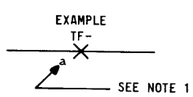

SHEET NOTES:

1. a - SEE SD-26002-01, FS 24, FOR CONTACT ARRANGEMENT.

OPTION ASSIGNMENTS

SHEET OPTION ASSIGNMENTS (A) THRU (M) WILL ALWAYS BE THE SAME THROUGHOUT THE SFD-10-01 DOCUMENT. OPTIONS (N) THRU (Z) WILL VARY AND WILL PERTAIN ONLY TO THE SHEET WHERE THE OPTION APPEARS.

- (A) 2X TROUBLE CARD;SD-27718-01
- (B) 1X TROUBLE CARD, SINGLE SIDED;SD-25805-01, TABLE I
- (C) 1X TROUBLE CARD, DOUBLE SIDED;SD-25805-01, TABLE IA
- (D) TRIPLE TRUNK LINK FRAME
- (E) PAIRED TRUNK LINK FRAME
- (F) NON PAIRED LINE LINK FRAME
- (G) PAIRED LINE LINK OPERATION
- (H) TRUNK LINK; SD-26032-01
- (J) 30 CLASSES OF SERVICE
- (K) 60 CLASSES OF SERVICE
- (L) 100 CLASSES OF SERVICE
- (M) TRUNK LINK;SD-27879-01
- (STD) STANDARD ARRANGEMENT
- (MD) MANUFACTURE DISCONTINUED ARRANGEMENT
- (A&M) ADDITIONS AND MAINTENANCE ONLY ARRANGEMENT

SEQUENCE CHARTS FOUND IN SFD-10-01 VOL III

SEQUENCE CHARTS SHOWN IN SFD-10-01 VOL III COVER OPERATIONS FOUND IN SD-27718-01, TABLE I. FUNCTIONAL SCHEMATIC PAGES INCLUDE SD-25805-01, TABLE I AND IA; AND SD-27718-01, TABLE I.

DOUBLE LINE BOXES ON SEQUENCE CHARTS

DOUBLE LINE BOXES:

1. ARE ALWAYS REFERENCE TO ANOTHER PART (NOT CIRCUIT).
2. IF SHOWN AS J1, THEN THE ENCLOSED SC IS COMPLETE AND ACCURATE FOR THE TYPE TEST BEING COVERED (EXAMPLE: OGT M004)
3. IF SHOWN AS K103 (ON PAGE M005), THEN ANY DETAIL INSIDE IS:
   - (A) REPEAT OF DETAIL FOUND ON K103 THAT IS IMPORTANT TO OGT TEST, AND
   - (B) DETAIL THAT TAKES PLACE IN THE "TIME FRAME" OF THE K103 SEQUENCE CHART AND FOR WHICH THE RELAYS SHOWN IN THE SC ARE ILLUSTRATED IN K1 PART.

A SECTION

A0 - VOL I,II,III
A1 - VOL I,II,III
A2 - VOL I,II,III
A3 - VOL I
A4 - VOL I
A5 - VOL II
A6 - VOL II
A7 - VOL III
A8 - VOL III

FLOW CHARTS

SYMBOLS USED IN FLOW CHARTS ARE AS FOLLOWS:

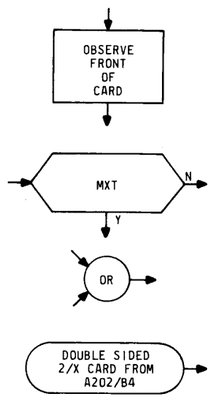

INSTRUCTION AND/OR INFORMATION BLOCK.

DECISION BLOCK - IS MXT DESIGNATION PUNCHED ON TROUBLE CARD N = NO, Y = YES

PROCEED THROUGH FROM EITHER INPUT.

INPUT FROM ANOTHER LOCATION

TROUBLE ANALYSIS SEQUENCE CHARTS

TROUBLE ANALYSIS SEQUENCE CHARTS SHOW SEQUENCE ONLY OF THE OCCURENCE OF PUNCHED TROUBLE RECORD DESIGNATIONS. THIS IS ALL THAT NEED BE OF CONCERN IN ANALYZING A CARD. THE TROUBLE ANALYSIS SEQUENCE CHART CROSS REFERENCES TO PAGES OF THE REGULAR SEQUENCE CHARTS FOR TROUBLE LOCATING PURPOSES.

THE FOLLOWING METHOD OF SHOWING SEQUENCE OF TROUBLE PUNCHES IS USED IN SFD:

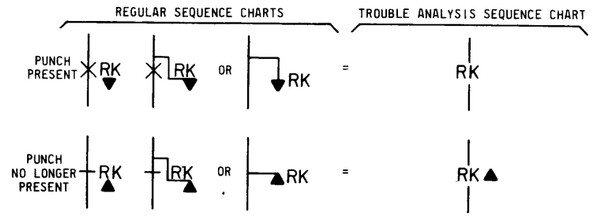

KEY PROGRESS INDICATION POINTS ARE SHOWN IN BOLD LETTERING WITH A HEAVY UNDERLINE FOR EASE IN LOCATING.

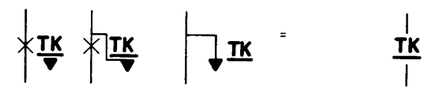

SEQUENCE CHARTS

STANDARD SYMBOLS HAVE BEEN USED IN DETACHED CONTACT DRAWINGS AND SEQUENCE CHARTS PER BSP 005-109-101 EXCEPT AS FOLLOWS:

STANDARD (SD)

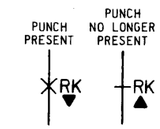

INDICATES THAT RK DESIGNATION IS PUNCHED EITHER FROM THE SAME SOURCE THAT OPERATED THE RK RELAY OR FROM A CONTACT CLOSURE OF THE RK RELAY.

PROPOSED STANDARD USED IN SFD

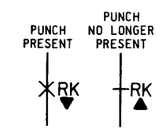

INDICATES THAT RK DESIGNATION IS PUNCHED FROM A CONTACT CLOSURE OF THE RK RELAY.

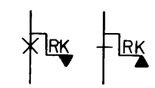

INDICATES THAT RK DESIGNATION IS PUNCHED FROM THE SAME SOURCE THAT ENERGIZED THE RELAY WINDING.

KEY PROGRESS INDICATION POINTS ARE SHOWN IN BOLD LETTERING WITH A HEAVY UNDERLINE FOR EASE IN LOCATING.

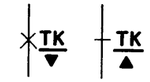

TIMING FUNCTIONS ARE DESIGNATED .

INDICATES THE START OF A TIMING CIRCUIT

INDICATES A TIMING CIRCUIT HAS STOPPED

ISSUE 5

SYMBOLS

BELL TELEPHONE LABORATORIES INCORPORATED

6S

SFD-10-01-A103

PRINTED IN U.S.A.

SFD-10-01-A103

CONNECTING CIRCUIT INDEX

ABBR	TITLE		SD-
5A TM	5A TIMER CKT		99304-01
-	KEY SHEET		25760-01
AA	AISLE ALARM		25671-01
AC-C3	AC CURRENT SUPPLY		
ALL	AUXILIARY LINE LINK		27719-01
ALM	ALARM		25671-01
ALMR	ALARM RECEIVING		95418-01
ALMS	ALARM SENDING		95417-01
AMB	ALL MARKERS BUSY		25695-01
AMRST	AUTOMATIC MONITOR,REGISTER, AND SENDER TEST (MASTER TEST FRAME)		25680-01
APTT	AUTOMATIC PROGRESSION TRUNK TEST		25938-01
BC	BATTERY CONTROL		81121-01
CM	COMPLETING MARKER		26002-01
CNS	COIN SUPERVISORY		25736-01
CSL	COIN SUPERVISORY LINK		26049-01
DTM	DIAL TONE MARKER		26001-01
DTTDC	DT TIME DELAY CONTROL		94820-01
GB	GROUP BUSY		25795-01
IAO	INTRAOFFICE TRUNK		26060-01
IMGS	INTERMARKER GROUP SENDER		25826-01
IMGT	INTERMARKER GROUP TRUNK		26141-01
IR	INCOMING REGISTER	MF	26042-01
		DP	26041-01
IRL	INCOMING REGISTER LINK		26048-01
IRMC	INCOMING REGISTER MARKER CONNECTOR	MKR	26025-01
		REG	26026-01
IT	INCOMING TRUNK		26070-01
IT SW	INCOMING TRUNK SW		95500-01
ITT	INCOMING TANDEM TRUNK		26071-01
	INCOMING TANDEM TRUNK (BYLINK)		26077-01
JGF	JUNCTOR GROUPING FRAME		-
JLK	JACK,LAMP, AND KEY (MASTER TEST FRAME)		25762-01

ABBR	TITLE		SD-
LINE	COIN,TWO PARTY AND INDIVIDUAL		-
LIT	LINE INSULATION TEST		95537-01
LITC	LINE INSULATION TEST CONTROL		25796-01
LL	LINE LINK FRAME		26030-01
LLC	LINE LINK CONNECTOR		26031-01
LLDC	LINE LOAD CONTROL		96387-01
LLMC	LINE LINK MARKER CONNECTOR		26022-01
LV	LINE VERIFICATION		26181-01
M-AMPL	MONITOR AMPLIFIER		96516-01
MDF	MAIN DISTRIBUTING FRAME		-
MFCS	MULTIFREQUENCY CURRENT SUPPLY		95391-01
MFSR	MULTIFREQUENCY SIGNAL RECEIVING		95536-01
MISC	MISCELLANEOUS FOR ALL FRAMES		25574-01
MTC	MASTER TEST CONTROL		25800-01
MTFC	MASTER TEST FRAME CONNECTOR	STD	27718-01
		MD	25805-01
MTMG	MASTER TIMER		25633-01
MTRC	MASTER TRAFFIC CONTROL		26020-01
MW SUP	2A SENDING PANEL		95000-01
	MILLIWATT DISTG CKT		95277-01
NG	NUMBER GROUP		26034-01
NGC	NUMBER GROUP CONNECTOR		26035-01
NTC	NO TEST CONNECTOR		25702-01
OSGR	OUTGOING SENDER GROUP RELEASE		26055-01
OGT	OUTGOING TRUNK		26085-01
OGIT	OUTGOING INFORMATION TRUNK		26144-01
OGT.JK	OUTGOING TRUNK TEST FR,TST AND MB JK		96376-01
OGTT	OUTGOING TRUNK TEST		95476-01
OI	OFFICE INTERRUPTER (60 OR 120 IPM)		25814-01
OR	ORIGINATING REGISTER		26040-01
ORMC	ORIGINATING REGISTER MARKER CONNECTOR	MKR	26023-01
		REG	26024-01
ORLM	ORIGINATING REGISTER LINE MEMORY	OR	26040-01
		TLC	26033-01
		ORMC	26024-01
OS	OUTGOING SENDER	MF	26051-01
		DP	26050-01
OSC	OUTGOING SENDER CONNECTOR	MKR	26059-01
		SDR	26057-01
OSL	OUTGOING SENDER LINK		25734-01
OT & P	OPERATOR TELEPHONE AND POSITION CKT		95502-01
PC	PREFERENCE CONTROL	LLMC,ORMC,IRMC	26029-01
PCMB	PREFERENCE CONTROL AND MAKE BUSY	LLC,OSC,TLC,NGC	26039-01
P-REG	PLANT REGISTER		25793-01
PRF	PERFORATOR		-

ABBR	TITLE		SD-
PRT	PRETRANSLATOR		25568-01
PRTC	PRETRANSLATOR CONNECTOR	PRT	25569-01
		REG	26038-01
PRTD	POWER,RING AND TONE DISTRIBUTION FRAME		25599-01
RCD	RECORDER (AUTOMATIC MESSAGE ACCOUNTING)		25872-01
REV	REVERTING CALL TRUNK		26068-01
RPTR	REPEATER		-
RSW	RINGING SWITCH		26080-01
SR	SIGNAL RECEIVER (MF)		95536-01
ST	SENDER TEST CKT		25675-01
STS	SENDER TEST SET		25674-01
TKL	TELEPHONE, KEY AND LAMP		25744-01
TL	TRUNK LINK	OPT H	26032-01
		OPT M	27879-01
TLC	TRUNK LINK CONNECTOR		26033-01
TN,GN	TONE GENERATOR CKT		99303-01
TP	TRUNK PREFERENCE		95501-01
TR	TROUBLE RECORDER		-
TRC	TROUBLE RECORDER CONTROL AND TEST		25572-01
T-REG	TRAFFIC REGISTER		25892-01
TRK	TRUNK		-
TRNSL	TRANSLATOR (AUTOMATIC MESSAGE ACCOUNTING)		26019-01
TS	TEST SET		
TT	TRUNK TEST (MASTER TEST FRAME)		25918-01
TT REG	TRUNK TEST REGISTER		27643-01
T-TERM	TEST TERMINATION		96540-01
TTL	TRANSMISSION TEST LINE		98100-01
TTR	"TOUCH-TONE" CALLING RECEIVING CIRCUIT-TYPE A2,ISSUE 1-4		95287-01
	"TOUCH-TONE" CALLING RECEIVING CIRCUIT-TYPE A3,POST ISSUE 5		98148-01
TTSTR	"TOUCH-TONE" STATION TEST RECEIVER-TYPE E1		98150-01
TUR	TRAFFIC USAGE RECORDER		95738-01
TV	TRANSVERTER (AUTOMATIC MESSAGE ACCOUNTING)		25591-01
TVC	TRANSVERTER CONNECTOR (AUTOMATIC MESSAGE ACCOUNTING)		26021-01
VM TST	MTF VOLTMETER TEST CKT		25792-01

ISSUE 5

SFD-10-01-A104

CONNECTING CKT INDEX

DWG SIZE 6S

BELL TELEPHONE LABORATORIES INCORPORATED

PRINTED IN U. S. A.

B-74031-L (4-72)

SFD-10-01-A104

ESTABLISHING NO. 5 CROSSBAR CONNECTIONS

INDEX

CAUTION!

DUE TO THE SIMPLIFIED NATURE OF THIS DOCUMENT, INFORMATION SHOWN MAY NOT BE COMPLETE.

ISSUE 5

NO. 5 CROSSBAR FLOW CHARTS

SFD-10-01-A201

BELL TELEPHONE LABORATORIES INCORPORATED

DWG SIZE 6S

PRINTED IN U.S.A.

SFD-10-01-A201

FLOW CHART
DOUBLE SIDED 2/X TROUBLE CARD

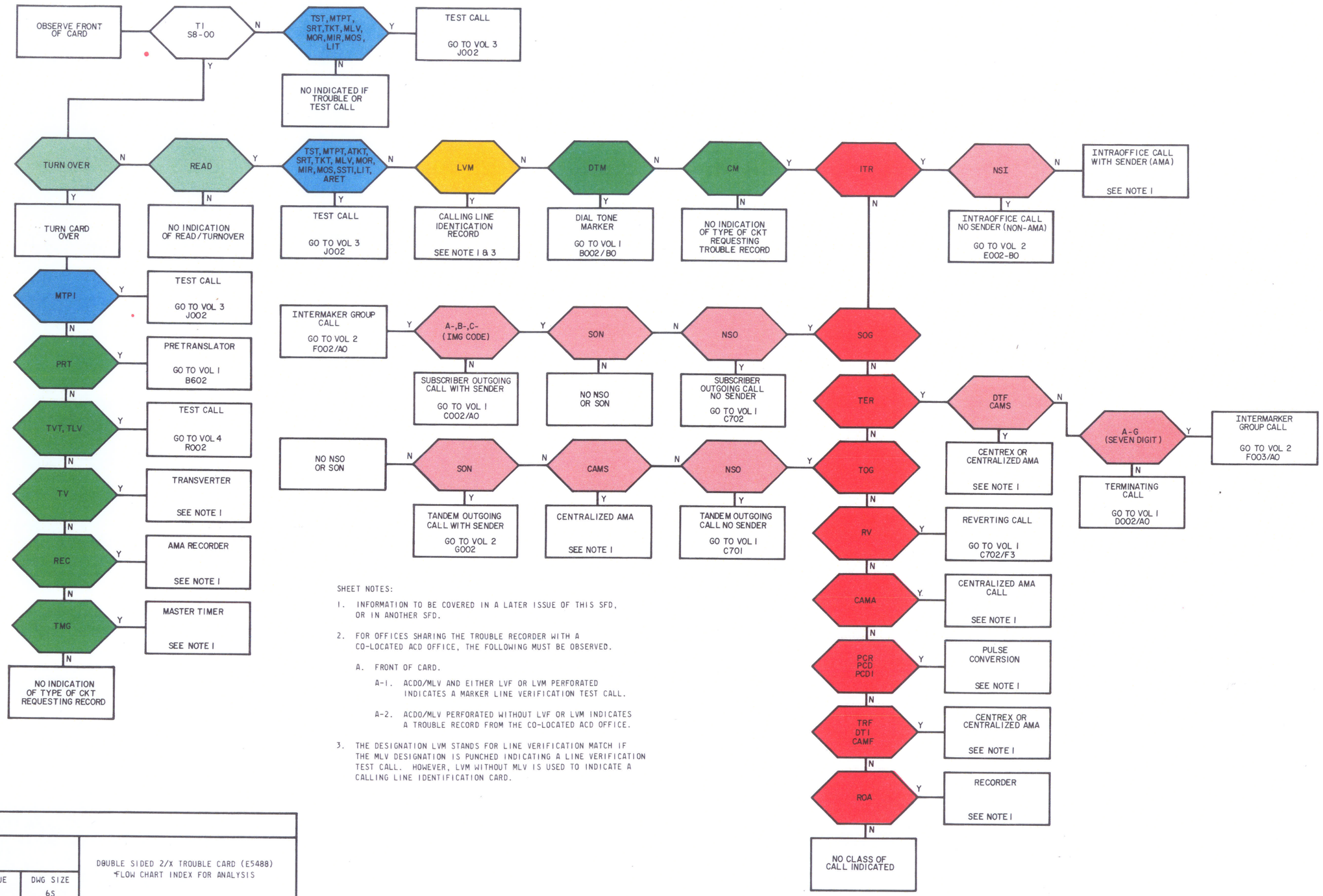

SHEET NOTES:

1. INFORMATION TO BE COVERED IN A LATER ISSUE OF THIS SFD, OR IN ANOTHER SFD.

2. FOR OFFICES SHARING THE TROUBLE RECORDER WITH A CO-LOCATED ACD OFFICE, THE FOLLOWING MUST BE OBSERVED.

   A. FRONT OF CARD.

      A-1. ACDO/MLV AND EITHER LVF OR LVM PERFORATED INDICATES A MARKER LINE VERIFICATION TEST CALL.

      A-2. ACDO/MLV PERFORATED WITHOUT LVF OR LVM INDICATES A TROUBLE RECORD FROM THE CO-LOCATED ACD OFFICE.

3. THE DESIGNATION LVM STANDS FOR LINE VERIFICATION MATCH IF THE MLV DESIGNATION IS PUNCHED INDICATING A LINE VERIFICATION TEST CALL. HOWEVER, LVM WITHOUT MLV IS USED TO INDICATE A CALLING LINE IDENTIFICATION CARD.

ISSUE 5	DWG SIZE 6S	DOUBLE SIDED 2/X TROUBLE CARD (E5488) FLOW CHART INDEX FOR ANALYSIS
SFD-10-01-	A202	BELL LABORATORIES

SFD-10-01-A202
7 SHEETS, SHEET 1

DOUBLE SIDED 2/X

FRONT

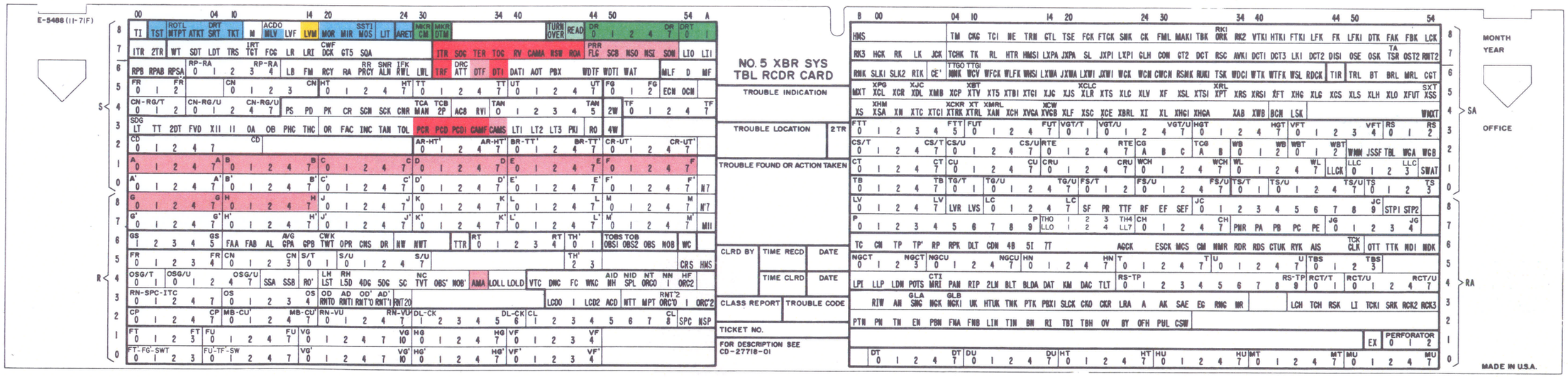

BACK

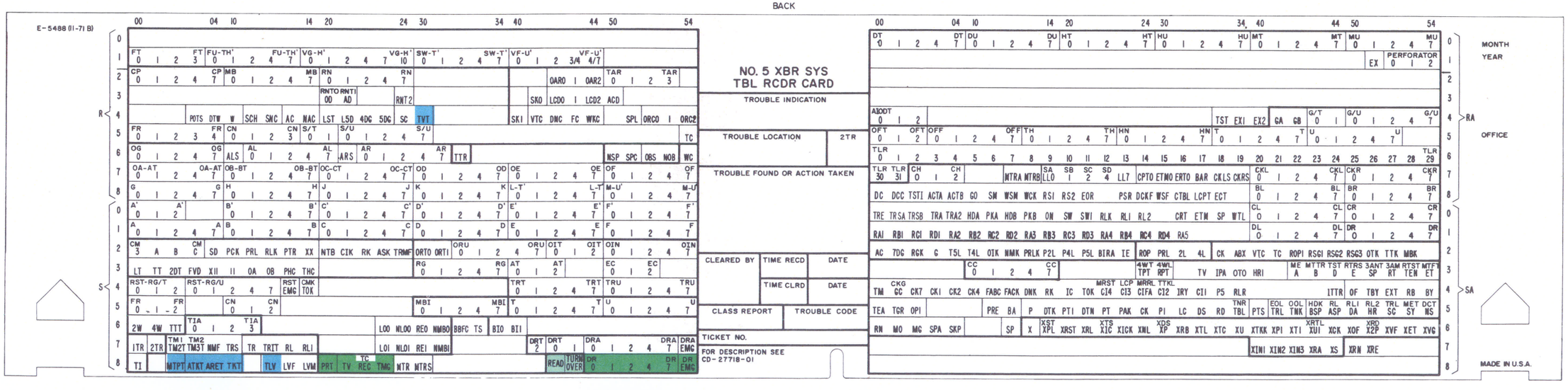

READ/TURN OVER

TYPE OF CALL

SUB TYPE OF CALL

TYPE OF EQUIPMENT REQUESTING TROUBLE RECORD

CALLING LINE IDENTIFICATION

TEST CALLS

ISSUE 5

DOUBLE SIDED 2/X
TROUBLE CARD

BELL TELEPHONE LABORATORIES
INCORPORATED

DWG SIZE 6S

SFD-10-01-A203

PRINTED IN U.S.A.

SFD-10-01-A203
7 SHEETS, SHEET 1

FLOW CHART
DOUBLE SIDED I/X TROUBLE CARD

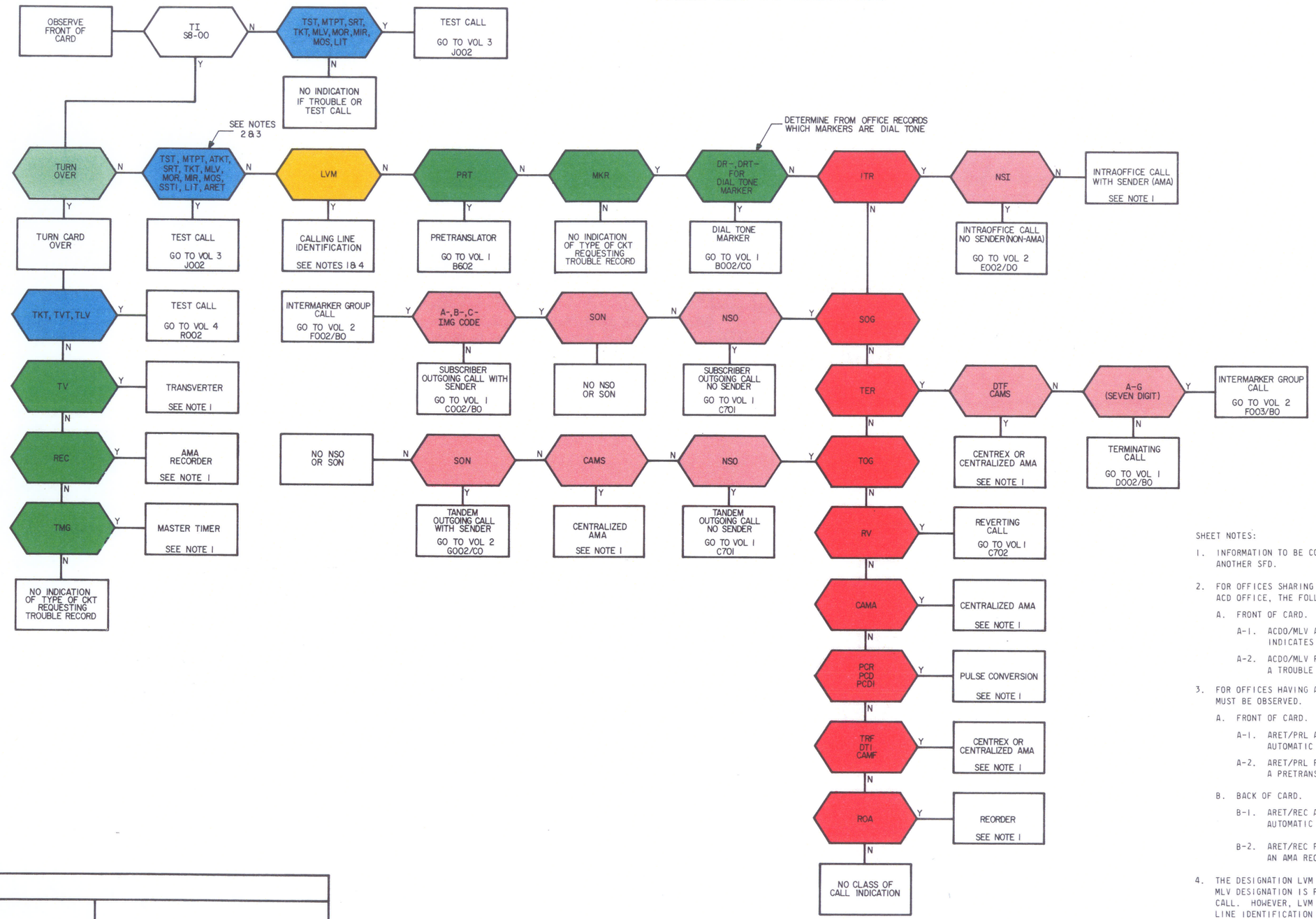

SHEET NOTES:

1. INFORMATION TO BE COVERED IN A LATER ISSUE OF THIS SFD, OR IN ANOTHER SFD.

2. FOR OFFICES SHARING THE TROUBLE RECORDER WITH A CO-LOCATED ACD OFFICE, THE FOLLOWING MUST BE OBSERVED.

   A. FRONT OF CARD.

      A-1. ACDO/MLV AND EITHER LVF OR LVM PERFORATED INDICATES A MARKER LINE VERIFICATION TEST CALL.

      A-2. ACDO/MLV PERFORATED WITHOUT LVF OR LVM INDICATES A TROUBLE RECORD FROM THE CO-LOCATED ACD OFFICE.

3. FOR OFFICES HAVING AUTOMATIC RANGE EXTENSION, THE FOLLOWING MUST BE OBSERVED.

   A. FRONT OF CARD.

      A-1. ARET/PRL AND MKR BOTH PERFORATED INDICATES AN AUTOMATIC RANGE EXTENSION TEST CALL.

      A-2. ARET/PRL PERFORATED WITHOUT A MKR PUNCH INDICATES A PRETRANSLATOR REQUESTED THE RECORD.

   B. BACK OF CARD.

      B-1. ARET/REC AND ARET BOTH PERFORATED INDICATES AN AUTOMATIC RANGE EXTENSION TEST CALL.

      B-2. ARET/REC PERFORATED WITHOUT A REC PUNCH INDICATES AN AMA RECORDER REQUESTED THE RECORD.

4. THE DESIGNATION LVM STANDS FOR LINE VERIFICATION MATCH IF THE MLV DESIGNATION IS PUNCHED INDICATING A LINE VERIFICATION TEST CALL. HOWEVER, LVM WITHOUT MLV IS USED TO INDICATE A CALLING LINE IDENTIFICATION CARD.

ISSUE 5	DWG SIZE 6S	DOUBLE SIDED I/X TROUBLE CARD (E4393) FLOW CHART INDEX FOR ANALYSIS
SFD-10-01-	A204	BELL LABORATORIES

SFD-10-01-A204
7 SHEETS, SHEET 1

DOUBLE SIDED I/X

FRONT

E-4393(1-73F)

NO. 5 XBR SYS
TBL RCDR CARD

TROUBLE INDICATION

TROUBLE LOCATION | 2TR

TROUBLE FOUND OR ACTION TAKEN

CLRD BY | TIME RECD | DATE
TIME CLRD | DATE

CLASS REPORT | TROUBLE CODE

TICKET NO.

SEE CD-25805-01 FOR DESCRIPTION

MONTH
YEAR
OFFICE

MADE IN U.S.A.

BACK

E-4393(1-73B)

NO. 5 CROSSBAR SYSTEM
TROUBLE RECORDER CARD

TROUBLE INDICATION

TROUBLE LOCATION | 2TR

TROUBLE FOUND OR ACTION TAKEN

CLEARED BY | TIME RECD | DATE
TIME CLRD | DATE

CLASS REPORT | TROUBLE CODE

TICKET NO.

SEE CD-25805-01 FOR DESCRIPTION

MONTH
YEAR
OFFICE

MADE IN U.S.A.

READ/TURN OVER

TYPE OF CALL

SUB TYPE OF CALL

TYPE OF EQUIPMENT REQUESTING TROUBLE RECORD

CALLING LINE IDENTIFICATION

TEST CALLS

ISSUE 5

DOUBLE SIDED 1/X
TROUBLE CARD

SFD-10-01-A205

BELL TELEPHONE LABORATORIES
INCORPORATED

DWG SIZE 6S

PRINTED IN U.S.A.

SFD-10-01-A205
7 SHEETS, SHEET 1

FLOW CHART
SINGLE SIDED I/X TROUBLE CARD

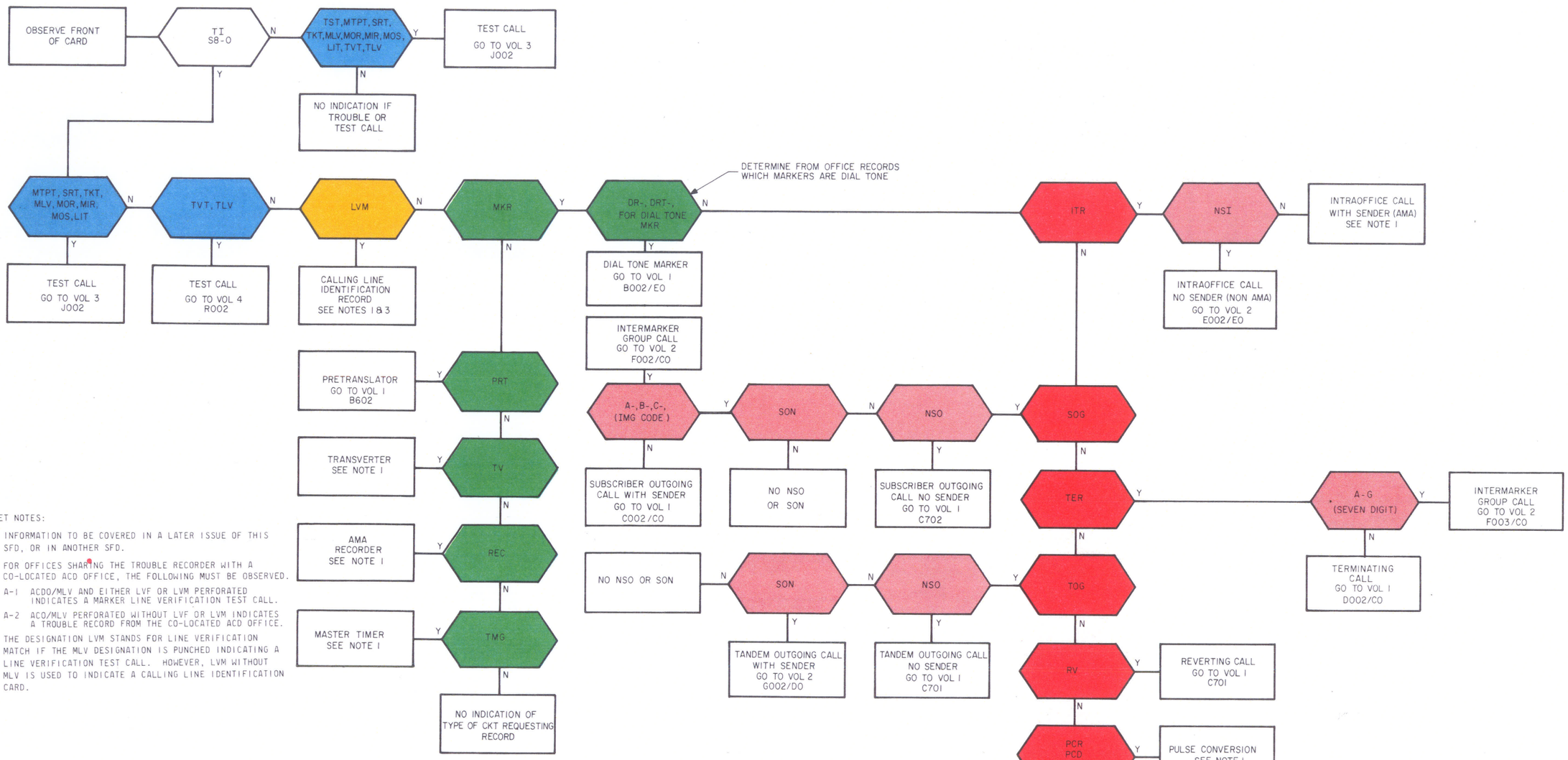

SHEET NOTES:

1. INFORMATION TO BE COVERED IN A LATER ISSUE OF THIS SFD, OR IN ANOTHER SFD.
2. FOR OFFICES SHARING THE TROUBLE RECORDER WITH A CO-LOCATED ACD OFFICE, THE FOLLOWING MUST BE OBSERVED.
   - A-1 ACDO/MLV AND EITHER LVF OR LVM PERFORATED INDICATES A MARKER LINE VERIFICATION TEST CALL.
   - A-2 ACO/MLV PERFORATED WITHOUT LVF OR LVM INDICATES A TROUBLE RECORD FROM THE CO-LOCATED ACD OFFICE.
3. THE DESIGNATION LVM STANDS FOR LINE VERIFICATION MATCH IF THE MLV DESIGNATION IS PUNCHED INDICATING A LINE VERIFICATION TEST CALL. HOWEVER, LVM WITHOUT MLV IS USED TO INDICATE A CALLING LINE IDENTIFICATION CARD.

ISSUE 5	DWG SIZE 6S	SINGLE SIDED I/X TROUBLE CARD (E3638) FLOW CHART INDEX FOR ANALYSIS
SFD-10-01-	A206	BELL LABORATORIES

SFD-10-01-A206
6 SHEETS, SHEET 1

SINGLE SIDED I/X

E-3638 (11-71)

	0	5	10	15	20	25	29
8	TI MTPT ATKT SRT TKT MLV TLV LVF LVM MOR MIR MOS TRS GT5			PRT MKR TV REC TMG	DR 0 2 3 4 5 6 7 8 9		DR EMG
7	MLF D MF LIT 2DT ITR RV SOG TOG TER ROA		SON NSO NSI	PRR FLG SCB	DRC RPB LCK RPAB TTT RPSA DRT 0 1 DRA 2 3 4 5 6 7 8		DRT-DRA 9 EMG
6	FR 0 1 2 3 4 5 6 7 8 9		FR CN 0 1 2 3	CN RP-RNT 0 1 2 3 4	RP CN-RG-RST 0 1 2 3 4 5 6 7 8		CN-RG-RST 9 EMG
5	CN-RG-RST 10 11 12 13 14 15 16 17 18 19		CN-RG-RST 20 21 22 23 PCR PCD PCD	ECN OCN 0 1 2 4	HT TT-T 7 0 1 2 4	TT-T UT-U 7 0 1 2 4	UT-U 7
4	SDG LT TT FVD XII II OA OB PHC THC		OR TAN TOL INC RO	FAC TRK LTI TR2 TOBS OBS1 TOB OBS2 FG 0	FG TF-CD 1 0 1 2 4	TF-CD 7 THO LLO 1 2 4	TH4 3 LLT
3	PS PD PK CR SCN SCK	NSP SPC MAN 2P OBS NOB	CMK CNR	CM 3 A B C	CM SD PCK PRL RLK PTR XX	TST M NID SPL CSW NC NT NTT AIS MPT AID NH NN	
2	FR 0 1 2	FR-CN 3 0 1 2	CN S 3 4	5 6 7 8 9 10 11 12	S LST L5D 4DG 5DG	SC TVT OBS' NOB' AMA RO'	
1	OSG 0 1 2 3 4 5	OSG SSA SSB	OS-RA 0 1 2 3 4	OS-RA TA OSE OSK TSR OST2 RSC RNT2 RNK	SLK1 SLK2 AVK1	TTR OSG 6 7 8 9	OSG S 13 S 14
0	A 0 1 2 4 7	A B 0 1 2 4 7	B C 0 1 2 4 7	C D 0 1 2 4 7	D E 0 1 2 4 7	E F 0 1 2 4 7	F 0 1 2 4 7
8	A' 0 1 2 4 7	A' B' 0 1 2 4 7	B' C' 0 1 2 4 7	C' D' 0 1 2 4 7	D' E' 0 1 2 4 7	E' F' 0 1 2 4 7	F' 0 1 2 4 7
7	G 0 1 2 4 7	G H 0 1 2 4 7	H J 0 1 2 4 7	J K 0 1 2 4 7	K L 0 1 2 4 7	L CR 0 1 2 4 7	CR 7
6	G' 0 1 2 4 7	G' H' 0 1 2 4 7	H' J' 0 1 2 4 7	J' K' 0 1 2 4 7	K' L' 0 1 2 4 7	L' BR-CR' 0 1 2 4 7	BR-CR' 7
5	CP 0 1 2 4 7	CP MB 0 1 2 4 7	MB RN 0 1 2 4 7	RN DL-CK 1 2 3 4 5	DL-CK 6 MII CL 1 2 3 4 5	CL 6 M7 M'7	
4	NGCU-TH 0 1 2 3 4 5 6 7 8 9		NGCU-TH HN 0 1 2 3 4 5 6 7 8	9	HN 9 OA OB SNG NGK UK HTUK TNK PTK NGK1		SNR PBX1
3	T 0 1 2 3 4 5 6 7 8 9		T U 0 1 2 3 4 5 6 7 8	9	U 9 SLCK CKO CKR A AK SAE EG RNG AN		RR PRCY
2	PN TN PTN PBN FNA FNB OV BY OFH PUL		LH RH LCH TCH LIN TIN BN RI TBI TBH RSK		LI TCK1 EN SRK RCK2 RCK3	AR 0 1 2 4	AR 7
1	FT 0 1 2 3	FT FU 0 1 2 4 7	FU VG-VU 0 1 2 4 7	VG-VU 10 0 1 2 4 7	HG-SW 0 1 2 4 7	HG-SW VF 0 1 2 3 4	VF CT 0 1	CT 2 IRT TGT IFK PSR
0	FT'-SWT 0 1 2 3	FU'-SW 0 1 2 4 7	FU'-SW VG' 0 1 2 4 7	VG' 10 HG' 0 1 2 4 7	HG' VF' 0 1 2 3 4	VF' CU 0 1 2 4 7	CU 7

NO.5 CROSSBAR SYSTEM
TROUBLE RECORDER CARD

TROUBLE INDICATION

TROUBLE LOCATION | 2TR

TROUBLE FOUND OR ACTION TAKEN

CLEARED BY | TIME RECD. | DATE
TIME CLRD. | DATE

CLASS REPORT | TRBL CODE

TICKET NO

SEE CD-25805-01 FOR DESCRIPTION

	30	35	40	45	50	55	59
8	CWF TM CKG DCK GTL TCI	JXPI CHE LXPI NE	TRN FCK FTCK CK	FML MAKI TBK TSE	LCK JCK TCHK LK	RK TK FM RCY RA	ORK DTK RKI RK2 RK3 SNK
7	CGT VTKI HTKI FTKI NR	LFK HGK LB RL	LXPA HMSI SL LTR HTR GLH CON	GT2 DCT DCTI LKI	JXPA DCT2 DCT3 TRL	BT DISI MRL	WC WT SDT LDT
6	XCL XCR XDL XMB XCP	XOB XI XTV XT5 XTB	XTG XTBI XTGI XJC	XJG XJS XLR XTS	XLC XLV XAB XF	XSL XTSI XPT XRS	XRSI XFT XCH XVGA XCW XVGB
5	XHG XLG XCS XLS XLH	XLO XFTT XFUT XRCT	SXT XSS XHM XS XSA	XN XFG XPG XPTN	XT XCLC XCKR XTC	XTCI XTRK XTRL	XBT XRL XMRL XAP XAN FCG SQA LR
4	FTT-RTE 0 1 2	RTT-RTE 3/4 FUT 0 1 2	3/4 4/7 5 6 7	8 9 FUT TPT	RCT 1 2 3 4	5 6 7 8 9	10 11 12 13 14 RCT 15
3	VGT 0 1 2	3 4 5 6 7	8 9 10 11	VGT 12 13 CGA CGB RPT	HGT 0 1 2 3	4 5 6 7 8	HGT 9 VFT 0 1 2 3 VFT 4
2	CS-TLR 0 1 2	3 4 5 6 7	8 9 10 11	12 13 14	15 16 17 18	19 20 21 22	23 24 25 26 27 CS-TLR 28 29
1	FS-G 0 1 2	3 4 5 6 7	8 9 10 11	12 13 14	15 16 17 18	FS-G 19 TB-G 0-A I-B 2	3 4 5 TB-G SF PR RF EF
0	TS-OFF 0 1 2	3 4 5 6 7	8 9 10 11	12 13 14	15 16 17 18	TS-OFF 19 LC 0 1 2	3 4 5 6 7 8 LC 9
8	TG 0 1 2	3 4 5 6 7	8 9 10 11	12 13 14	15 16 17 18	TG 19 FAK FBK LV 2	3 4 5 6 7 8 LV 9
7	RS-TP 0 1 2	3 4 5 6 7	8 RS-TP 9 RN-SPC-ITC-TTG 0 1 2	3 4 5 6	7 8 RN-SPC-ITC-TTG 9 CH 0 1 2	3 4 5 6 7 8	CH 9
6	JC 0 1 2	3 4 5 6 7	8 JC 9 JG 0 1 2	3 4 JG	PNR PA PB PC P 0 1 2	3 4 5 6 7 8	P 9
5	STPI STP2 GS 1 2	3 4 GS 5 AL	AVG GPA GPB DR	CWK TWT OPR CNS	CRR 0 1 CRR 2 EX RT 0 1 2	3 RT 4 FAA FAB	NOC CLG CLTI CLT2 TCK CLK
4	TC CN TP TP' RP	RPK NDI NDK	OTT TTK CL7 CL8 LT2	OFT 0 1 OFT 2	TV IPA OTO HRI	AT MT-NGCT A-0 B-1 D-2	E-3 SP RT MT-NGCT TEN ET
3	TM CKG CK7 RVI CKI DAC CK2 TLT CK4 LOLD DNK LOLL	RK	IC TOK CI4 CI3	CI2 IRY CI1	P5 RLR RL	LVO TR LVI TM1 TB6 TM2	TB7 CIFA TB8 FABC TB9 FACK XSC TRIT OF TBY EXT RB BY
2	CRS TEA HMS TGR TRK ITR TR2 2TR OPI	AC8	P	DTK PTI DTN	PT PAK	CK PI LC	DS RD MXT TBL PTS BSP ASP DA HR SC SY NS
1	RN MO MG SPA SKP		XPL	X XRST XRL	XIC XICK	XNL XP	XRB XTL XTC XU XTKK XPI XTI XUI XCK XOF X2P XVF XET XVG
0	DT 0 1 2 4 7	DT DU 0 1 2 4 7	DU HT 0 1 2 4 7	HT HU 0 1 2 4 7	HU MT 0 1 2 4 7	MT MU 0 1 2 4 7	MU

MONTH
YEAR
OFFICE

MADE IN USA

TYPE OF CALL

SUB TYPE OF CALL

TYPE OF EQUIPMENT REQUESTING TROUBLE RECORD

CALLING LINE IDENTIFICATION

TEST CALLS

ISSUE 5

SINGLE SIDED 1/X
TROUBLE CARD

SFD-10-01-A207

BELL TELEPHONE LABORATORIES
INCORPORATED

DWG SIZE 6S

PRINTED IN U.S.A.

E-7421 (10-71)

SFD-10-01-A207
6 SHEETS, SHEET 1

RELAYS

DESIG	CKT	LOC	EQPT LOC *
A	IT	C617/B4	
A	IR	C617/F8	
A	IT	C627/C4	
A	IT	D111/B4	
A	IR	D111/E8	
A	IT	D125/B4	
A	IT	D127/B2	
A	CM	D418/C8	C28L
A	IT	D706/F3	
A-	NG	D425/C7	
AB	LLDC	B112/C3	
AB	IR	D108/C9	
AB	IR	D122/C8	
AB	CM	D422/G4	P27
AB0-8	MTFC	C607/F6	
AB0-8	MTFC	D709/F6	
AC	LLDC	B112/D3	
AC	IR	D130/F9	
ACC	IR	D125/G6	
ACC	IR	D126/D2	
ACV	JLK	C535/G9	
ACV	JLK	D627/G9	
ACV1	JLK	C535/G9	
ACV1	JLK	D627/G9	
AC0	AMRST	B430/C4	
AC0,1,2,4,7	PRT	B603/B7	
AC0,1,2,4,7	CM	C115/A3	T26R
AC0,1,2,4,7	CM	D212/B3	T26R
AC4,7	CM	C704/E1,F1	T26R
AD	CM	C216/G4	C22L
ADVA	CM	D407/E4	P28
AHB0-4	CM	D421/F3,G3	P38
AHB5-9	CM	D421/E3,F3	P40
AHG	CM	D420/C9	P27
AK	CM	D418/D8	C28L
ALA	MTRC	C142/D6	
ALA	MTRC	D134/D6	
ALB	MTRC	C142/F6	
ALB	MTRC	D134/F6	
ALS0-5	CM	D407/B9-F9	P28
AL0-3	CM	C119/B8	T52L
AMA	OSC	C207/B2	
AMA	OS	C211/G8	
AMA	CM	C214/D0	T47R
AMA1	CM	C214/E0	C13L
AMA3-5	CM	C214/E0,F0	C24L
AMB	DTM	B110/D5	15
AMB	CM	C106/D5	C20R
AMB	CM	D206/D5	C20R
AN	CM	D423/E7	P27
ANA0-4	CM	D423/E6	P29
ANA5-9	CM	D423/E6	P31
ANB0-4	CM	D423/A6	P37
ANB5-9	CM	D423/A6	P39
ANC0,4	CM	D423/B6	P45
ANC5,9	CM	D423/B6	P47
AND0,4	CM	D423/C6	P53
AND5,9	CM	D423/C6	P55
ANDN	CM	D420/A9	P27
ANR	CM	D420/F1	P27
ANR1,2	CM	D420/D1,D9	P27
ANS	CM	D420/C9	P27
ANT	CM	D420/A9	P27
AO	DTM	B429/H4	31
AOA	CM	C406/F5	C27R
AOA	CM	C407/F5	C27R
AOA	CM	D510/F5	C27R
AOA	CM	D511/F5	C27R
AOC	CM	C406/E4	C25R
AOC	CM	D510/E4	C25R
AOMR	DTM	B429/H3	29
ARS	OS	C611/F1	
ARS	OS	C621/F1	
AR0,1,2,4,7	OS	C610/C1	
AR0,1,2,4,7	OS	C620/C1	
AS	TT	B422/A0	
AS	OR	B509/A1	

DESIG	CKT	LOC	EQPT LOC *
AS	TT	C532/B1	
AS	OS	C611/F2	
AS	OS	C621/F2	
AS	TT	C824/G8	
AS	IR	D113/A4	
AS	IR	D129/A3	
AS	TT	D624/B1	
ASB	CM	C207/E4	C18L
ASB	MTC	C207/G1	R12
AST	CM	D408/C9	T38R
ATB0-4	CM	D421/B3,C3	P30
ATB5-9	CM	D421/A3,B3	P32
ATC	OS	C615/C6	
ATC	OS	C624/C4	
ATC1	OS	C624/D4	
ATM	OS	C613/F2	
ATM	OS	C623/G6	
ATT	APST	C310/G6	
ATT	MTC	C310/G9	R52
AT0-2,9	CM	C120/C6-G6	T25R
AV	OS	C206/G9	
AVK	CM	C206/G4	C21L
AVK	CM	C604/A9	C21L
AVK1	CM	C207/E7	C22L
A0-11	MTFC	C607/C4	
A0-11	MTFC	D709/C4	
A0,1,2,4,7	OR	B509/E1	
A0,1,2,4,7	AMRST	C145/H0	
A0,1,2,4,7	AMRST	C150/D6	
A0,1,2,4,7	OS	C208/A8	
A0,1,2,4,7	CM	C208/B4	T28R-T32R
A0,1,2,4,7	OS	C610/C3	
A0,1,2,4,7	OS	C620/C3	
A0,1,2,4,7	IR	D113/G2	
A0,1,2,4,7	IR	D129/E1	
A0,1,2,4,7	OS	D213/A7	
A0,1,2,4,7	CM	D213/B4	T28R-T32R
A0,1,2,4,7	AMRST	D218/G0	
B	LL	B112/A8	
B	LLDC	B112/C5	
B	AMB	B112/H7	
B	IT	D127/C4	
BAT	JLK	C106/E9	
BAT	JLK	D206/E9	
BA0-9	PRT	B606/A1-D1	
BB	MTC	C144/B3	R8
BB	MTC	D217/B3	R8
BC0	DTM	B204/F3	47
BC0,1,2,4,7	PRT	B603/B7	
BC0,1,2,4,7	CM	C115/B3	T27R
BC0,1,2,4,7	CM	D212/C3	T27R
BC00	CM	C307/G1	C47R
BC10	DTM	B204/F3	50
BC10	CM	C307/G1	C50R
BC20	DTM	B204/G3	S-3
BC20	CM	C307/H1	F3
BD	OS	C625/B0	
BG	CM	C108/G4	C21L
BG	CM	D209/A5	C21L
BG	CM	D210/G3	C21L
BL	CM	C132/C3	T43R
BL	IR	D126/F5	
BLK	IR	D126/E7	
BN	CM	D419/D1	C31L
BNB	CM	D419/E8	C32L
BNTH	CM	D411/E4	C31L
BRS	OS	C611/F1	
BRS	OS	C621/F1	
BR0,1,2,4,7	OS	C610/C2	
BR0,1,2,4,7	OS	C620/C2	
BS	OR	B509/A2	
BS	PRT	B607/E0	
BS	OS	C611/F3	
BS	OS	C621/F3	
BS	IR	D113/A5	
BS	IR	D129/A4	
BSR0-2	PRTC	B609/E4	

DESIG	CKT	LOC	EQPT LOC *
BT	MTC	B106/B0	R4
BT	OR	B512/E8	
BT	MTC	C107/C0	R4
BT	OR	C107/C7	
BT	AMRST	C517/D9	
BT	MTC	D207/C1	R4
BTOR-9R	CM	C121/E4	T18R
BTOS-9S	CM	C121/C4	T18R
BTOT-9T	CM	C121/A4	T18R
BT00-90	CM	C121/G4	T17R
BT1	AMRST	D117/G6	
BT2	AMRST	D116/H7	
BX	DTM	B207/A0	10
BX	CM	C109/D0	C4L
BX	CM	D115/D0	C4L
BX	CM	D209/E1	C4L
BY	IT	D127/C2	
BY	CM	D630/A3	C32L
BY	CM	D806/E7	C32L
B0-9	PRT	B606/A1-D1	
B0-9	MTFC	C607/C4	
B0-9	MTFC	D709/C4	
B0,1,2,4,7	OR	B509/E3	
B0,1,2,4,7	AMRST	C145/H1	
B0,1,2,4,7	AMRST	C151/C0	
B0,1,2,4,7	CM	C208/C4	T28R-T32R
B0,1,2,4,7	OS	C208/C7	
B0,1,2,4,7	OS	C610/C3	
B0,1,2,4,7	OS	C620/C3	
B0,1,2,4,7	IR	D113/G4	
B0,1,2,4,7	IR	D129/G3	
B0,1,2,4,7	CM	D213/C4	T28R-T32R
B0,1,2,4,7	OS	D213/C7	
B0,1,2,4,7	AMRST	D218/G1	
B1,2	AMB	B112/H6,H7	
B1,2	MFCS	C615/G2	
B147,B258,B369	CM	C121/D3,E3	T27R
C	LL	B112/E8	
C	LLDC	B112/F5	
C	AMRST	D116/E3	
CA	LL	B106/H8	
CA	PRTC	B609/A2,D7	
CA	PC	C107/B7	
CA	PC	D207/B7	
CAA	CM	C119/B8	T43R
CAA	CM	C133/H7	T43R
CAU0-9	CM	C407/B5	C52R
CAU0-9	CM	D511/C5	C52R
CB	CM	C403/A4	C42L
CB-	PC	B103/B6,E6	
CB-	PC	C105/B6,E6	
CB-	PC	D205/B6,E6	
CB-	PC	D804/A0	
CB0	PC	B103/B3,E3	
CB0	PRTC	B605/B3	
CB0	PC	C105/B3,E3	
CB0	PC	D205/B3,E3	
CB1	PRTC	B605/B8	
CB1,2	CM	C403/A4,C8	C42L,C46L
CB3,4	CM	C403/D8	C44L
CB5,6	CM	C403/E8	C36R,C40L
CCM	PRT	B607/G1	
CCT	JLK	B425/G6	
CCT	JLK	C530/D2	
CCT	JLK	C535/G8	
CCT	JLK	D622/D2	
CCT	JLK	D627/G8	
CC0,1,2,4,7	PRT	B603/C7	
CC0,1,2,4,7	CM	C115/B3	T27R
CC0,1,2,4,7	CM	D212/C3	T27R
CDK0,1	CM	C204/A6	C18L
CGA	DTM	B304/E5	31
CCA	DTM	B305/E5	31
CGA	OR	B429/E6	
CGA	CM	C113/E4	T49L
CGA1	DTM	B429/C1	31
CGB	DTM	B304/F5	31

* SHEET NOTES:

1. EXPLANATION OF EQPT LOC

CM SD-26002-01 COMPLETING MARKER CIRCUIT
C--L OR C--R LEFT OR RIGHT COMMON EQPT FRAME (CE)
T--L OR T--R LEFT OR RIGHT TRANSLATOR AND CODE TREATMENT FRAME (T&CT)
S-- SUPPLEMENTAL OR AUX SERV TREATMENT FRAME (SST) OR (AST)
RR-- ROUTE RELAY FRAME (RR)
F-- FC RELAY FRAME (FCR)
P-- PBX ALLOTTER FRAME (PBX ALLR)
CV-- CODE CONVERSION FRAME (CC)
REL R RELAY RACK FRAME (RR)

DTM SD-26001-01 DIAL TONE MARKER CIRCUIT
-- DIAL TONE MARKER FRAME (DTM)
S-- SUPPLEMENTARY DIAL TONE MARKER FRAME (SDTM)

MTC SD-25800-01 MASTER TEST CONTROL CIRCUIT
L-- OR R-- LEFT OR RIGHT MTF CONTROL FRAME (MTF CONT)

RELAY RACK MOUNTED EQPT
RR4 PAIRED LINE LINK CONTROL (RR)

APPARATUS INDEX	DWG SIZE	ISSUE
	C2	5
BELL LABORATORIES SFD-10-01		A301

PRINTED IN U.S.A.

RELAYS

DESIG	CKT	LOC	EQPT LOC *
CGB	DTM	B305/F5	31
CGB	OR	B429/E6	
CGB	CM	C113/F4	T49L
CGB1	DTM	B429/D1	31
CGRA	CM	C113/E4	T4+R
CGRB	CM	C113/F4	T4+R
CGT	CM	C530/D4	C27R
CGT	JLK	C530/E2	
CGT	CM	D622/D4	C27R
CGT	JLK	D622/E2	
CGT	CM	D804/C4	C27R
CH	PCMB	B204/C8	
CH	PCMB	B303/B3,E3	
CH	PCMB	C306/C9	
CH	PCMB	C405/B3,E3	
CH	PCMB	D304/C9	
CH	PCMB	D409/A3,E3	
CH	PCMB	D505/B3,E3	
CHA	DTM	B415/A0	23
CHA	CM	C525/A0	C31R
CHA	CM	D617/A0	C31R
CHA	CM	D809/C8	C31R
CHA1	CM	C525/A0	C28R
CHA1	CM	D617/A0	C28R
CHA1	CM	D809/C8	C28R
CHT	CM	C525/G6	C24R
CHT	CM	D617/G6	C24R
CHT	CM	D809/E1	C24R
CHT0-9	DTM	B414/G2-G9	19
CHT0-9	CM	C524/G2-G9	C24R
CHT0-9	CM	D616/G2-G9	C24R
CHO-9	DTM	B415/B2-B7	17
CHO-9	CM	C525/A2-A7	C22R
CHO-9	CM	D617/A2-A7	C22R
CHO-9	CM	D809/B1-B7	C22R
CI	AMRST	C149/F4	
CIC	MTFC	C607/C5	
CIC	MTFC	D709/C5	
CI1	AMRST	C149/C6	
CK	IR	D106/H7	
CK	IR	D109/F8	
CK	IR	D123/F8	
CK	IR	D126/G4	
CKE	AMRST	C155/C7	
CKG	MTC	D210/G0	
CKG1,2	DTM	B104/C3	21,23
CKG1,2	DTM	B502/A6	21,23
CKG1,2	CM	C108/H5	C35R,C36R
CKG1,2	CM	C605/B9	C35R,C36R
CKG1,2	CM	D210/H5	C35R,C36R
CKG1,2	CM	D705/B9	C35R,C36R
CKG4,8	CM	C307/F1	C35R,C31R
CKG4,8	CM	D209/B2,C2	C35R,C31R
CKG5,6	CM	C108/H5	C36R,C35R
CKG5,6	CM	D209/C1,D1	C36R,C35R
CKG5,6	CM	D210/H5	C36R,C35R
CKN	AMRST	C155/E4	
CKO	CM	D419/C8	C30L
CKR	CM	D419/F8	C30L
CKS	AMRST	C155/G6	
CK1,2	MTC	C614/B1,B2	R43,R44
CK2,3	SR	D112/F7,G3	
CLG	CM	C312/B1	C20L
CLK	CM	C312/F1	C20L
CLK1-3	CM	C210/F1,G1	T45R
CLL1,2	DTM	B427/D1	29
CLP	CM	C119/F4	T45R
CLS	CM	C119/F4	T45R
CLS	IR	D108/D9	
CLS	IR	D122/E8	
CLS	IR	D804/A2	
CLS1	IR	D122/G8	
CLT	CM	C312/D3	C20L
CLT	IR	D108/E9	
CLT	IR	D122/G8	
CLT1,2	CM	C312/C1,B1	C20L
CLO-5	CM	C119/F4	T45R

DESIG	CKT	LOC	EQPT LOC *
CL1	IR	D122/C8	
CL1-6	OS	C210/F9,G9	
CL1-8	OS	C210/F9	
CL6-8	CM	C119/F4	T5+R
CL9	CM	C119/F4	T5R
CMA	PRT	B607/A0	
CMA	MTC	B607/B8	R51
CMA	OR	B607/E7	
CMB	PRT	B607/B0	
CMB	MTC	B607/B8	R51
CMB	OR	B607/F7	
CMC	PRT	B607/C0	
CMC	MTC	B607/C8	R51
CMC	OR	B607/G7	
CMR0,1	CM	C119/B8	T9R
CMS	AMRST	B430/G1	
CM3	MTC	B607/A8	R51
CM3	PRT	B607/D0	
CM3	OR	B607/D7	
CN	DTM	B429/G2	31
CN	OR	B429/G6	
CN	OR	B511/D2	
CN	DTM	B511/D4	31
CN	OGT	C312/A9	
CN	OGT	C313/A9	
CN	CM	C406/D4	C25R
CN	CM	D510/D4	C25R
CNA	CM	C406/F5	C27R
CNA	CM	C407/F5	C27R
CNA	CM	D510/F5	C27R
CNA	CM	D511/F5	C27R
CNC	CM	C312/D7	T42R
CNK	CM	C312/A6	C20L
CNR	MTC	C112/F1	R43
CNT	OR	B512/C5	
CNT1-3	OR	B511/C0,D0	
CN1	OR	B511/C3	
CO	IRL	D106/E2	
COF	OS	C620/G1	
CON	DTM	B425/D9	25
CON	MTC	C530/C0	R42
CON	CM	C535/D9	C26R
CON	MTC	D622/C0	R42
CON	CM	D627/D9	C26R
CONA	CM	C530/B6	C26R
CONA	CM	D622/A6	C26R
CONT	PRF	C607/C2	
CON1	DTM	B425/G8	24
CON1	CM	C530/C4	C26R
CON1	CM	C535/F7	C26R
CON1	CM	D622/C3	C26R
CON1	CM	D627/F7	C26R
CON1	CM	D804/D4	C26R
COX	DTM	B207/D0	10
CPK1,2	CM	C212/A1,C1	T49R
CPP	CM	C119/D4	T49R
CPS	CM	C119/E4	T49R
CPO-9	CM	C119/D4	T50R
CPO,1,2,4,7	OS	C212/B9	
CP10	CM	C119/D4	REL R
CR	OR	B512/D7	
CR	PRT	B606/E1	
CR	CM	C112/E4	T40R
CRB1	AMRST	D116/E9	
CRK1,2	CM	C210/D1,B1	T44R
CRP	CM	C119/D4	T44R
CRS	CM	C119/D4	T44R
CRS	OS	C611/F1	
CRS	OS	C621/F2	
CRU0,1,2,4,7	OR	B429/A6	
CRU0,1,2,4,7	CM	C113/D4	T4+R
CRO-4	CM	C119/D4	T44R
CRO,1,2,4,7	OS	C210/B9	
CRO,1,2,4,7	OS	C610/C2	
CRO,1,2,4,7	OS	C620/C2	
CR1,2	OR	B511/B8,C8	
CR4	OR	C112/F8	

DESIG	CKT	LOC	EQPT LOC *
CR5	CM	C119/D4	T44R
CS	OR	B509/A2	
CS	PRT	B606/F1	
CS	OS	C611/F3	
CS	OGT	C616/B6	
CS	OS	C621/F3	
CS	OGT	C626/B6	
CS	OGT	D110/B6	
CS	IR	D113/A6	
CS	OGT	D124/B5	
CS	IR	D129/A5	
CSD	PRT	B607/D1	
CSGA	DTM	B304/E6	31,6
CSGA	DTM	B305/E6	31,6
CSGB	DTM	B304/F6	31,6
CSGB	DTM	B305/G6	31,6
CSGK	DTM	B429/D1	31,6
CSK	MTC	B304/C1	R9
CSK	MTC	B305/D1	R9
CSK	MTC	C406/D0	R9
CSK	MTC	C407/E0	R9
CSK	CM	C407/E3	C12L
CSK	MTC	D510/D0	R9
CSK	MTC	D511/E0	R9
CSK	CM	D511/E3	C12L
CSK1	MTC	B304/B1	L45
CSK1	MTC	B305/C1	L45
CSK1	MTC	C406/C0	L45
CSK1	MTC	C407/D0	L45
CSK1	MTC	D510/C0	L45
CSK1	MTC	D511/D0	L45
CSRK	MTC	B304/D1	L45
CSRK	MTC	B305/D1	L45
CSRK	MTC	C406/E0	L45
CSRK	MTC	C407/F0	L45
CSRK	MTC	D510/E0	L45
CSRK	MTC	D511/F0	L45
CSRK1,2	DTM	B429/A1,B1	5
CSRO-9	DTM	B304/C6	5
CSRO-9	DTM	B305/D6	5
CSTK1,2	DTM	B429/E1	31
CSTO-2	DTM	B305/C6	30
CSTO-2	CM	C407/C5	C12L
CSTO-2	CM	D511/D5	C12L
CST3-9	DTM	B305/C6	6
CST3-9	CM	C407/C5	C11L
CST3-9	CM	D511/D5	C11L
CSU0-9	DTM	B305/D6	30
CSU0-9	CM	C407/D5	C12L
CSU0-9	CM	D511/D5	C12L
CSO-9	DTM	B304/B6	30
CSO-9	DTM	B427/B3	30
CT	PRT	B606/F1	
CT	OS	C213/D6,G6	
CTA0-9	CM	C113/B4	T48L
CTB0-2	CM	C113/B6	T49L
CTO-2	DTM	B304/D6	30
CTO-2	DTM	B427/B4	30
CTO-2	CM	C113/B4	T48L
CTO,1,2,4,7	OR	B429/E6	
CTO,1,2,4,7	CM	C113/B4	T48L
CT1	MTC	D624/C2	R42
CT1-4	MTC	C530/A1,B1	R42
CT1-4	MTC	D622/A1,B1	R42
CU	PRT	B606/D3	
CUA	PRT	B606/D3	
CUA0,1,2,4,7	CM	C113/B4	T48L
CUB0,1,2,4,7	CM	C113/B4	T49L
CUK1,2	DTM	B427/G1	29
CU0,1,2,4,7	OR	B427/G8	
CV	PRT	B606/E3	
CVA	PRT	B606/E3	
CV00-95	CM	C119/B8	CV23
CW	PRT	B606/G3	
CWA	PRT	B606/G3	
CWA	MTRC	C108/B7	
CWA	MTRC	C142/D4	

DESIG	CKT	LOC	EQPT LOC *
CWA	MTRC	D134/D4	
CWA	MTRC	D210/B7	
CWB	MTRC	C108/B7	
CWB	MTRC	C142/F4	
CWB	MTRC	D134/F4	
CWB	MTRC	D210/B7	
CWT	LL	B106/E9	
CZC	PRT	B606/F1	
CZO-9	PRT	B606/A2-D2	
CO-5	IRL	D130/B4	
CO-7	MTFC	C607/E4	
CO-7	MTFC	D709/E4	
CO,1,2,4,7	OR	B509/E4	
CO,1,2,4,7	AMRST	C145/H2	
CO,1,2,4,7	AMRST	C151/C2	
CO,1,2,4,7	OS	C208/C7	
CO,1,2,4,7	CM	C208/D4	T28R-T32R
CO,1,2,4,7	OS	C610/C4	
CO,1,2,4,7	OS	C620/C4	
CO,1,2,4,7	IR	D113/G4	
CO,1,2,4,7	IR	D129/G4	
CO,1,2,4,7	OS	D213/C7	
CO,1,2,4,7	CM	D213/D4	T28R-T32R
CO,1,2,4,7	AMRST	D218/G2	
C5	IRL	D107/B2	
D	DTM	B105/C5	15
D	OGT	C213/F2	
D	OGT	C309/C9	
D	OGT	C616/D6	
D	OGT	C626/D6	
D	OGT	D110/D6	
D	OGT	D124/C5	
D	IT	D127/C1	
D	IT	D131/B0,D0	
DAR	OS	C612/F1	
DAR	OS	C622/F2	
DBR	OS	C612/F3	
DBR	OS	C622/F3	
DCI	CM	D419/B1	C33R
DCK	IR	D104/H8	
DCK	IR	D126/G6	
DCK	CM	D131/E8	
DCR	OS	C612/E5	
DCR	OS	C622/E6	
DCT	DTM	B423/E4	25
DCT	DTM	B424/D7	25
DCT	MTC	B502/G3	R3
DCT	CM	C533/D4	C29R
DCT	CM	C534/D8	C29R
DCT	MTC	C604/G2	R3
DCT	CM	D625/D4	C29R
DCT	CM	D626/D8	C29R
DCT	MTC	D704/G2	R3
DCT1	DTM	B502/E6	24
DCT1	CM	C604/B9	C33R
DCT1	CM	D704/B9	C33R
DIR1	AMRST	D116/E9	
DISA	DTM	B110/F2	22
DISA	CM	C106/F2	C18R
DISA	CM	D206/F2	C18R
DIS1	MTC	B502/D3	R4
DIS1	CM	C215/B5	C18R
DIS1,2	DTM	B502/C6	22
DIS1,2	CM	C605/B8	C18R
DIS1,2	MTC	C605/F6,G7	R4
DIS1,2	CM	D705/B8	C18R
DIS1,2	MTC	D705/G7	R4
DL	OR	B512/E5	
D'	PRT	B611/E4	
DL	CM	C607/F8	C18R
DL	CM	D709/F8	C18R
DLA	JLK	B513/E8	
DLK1	CM	C211/E3	T46R
DLK2	CM	C210/E1	T46R
DLP	CM	C119/E4	T46R
DLS	CM	C119/E4	T46R
DLO-6	CM	C119/E4	T46R

DESIG	CKT	LOC	EQPT LOC *
DL1-6	OS	C211/D8	
DMS	OR	B512/A2	
DOR	AMRST	B430/B8	
DOR1,2	AMRST	B430/G3	
DP	CM	C111/B5	T49R
DP	IR	C627/G4	
DP	IR	D126/E5	
DRR0,1	CM	C119/B8	T5+R
DRO-2	CM	C129/B6,D8,D9	T42R
DRG-7	CM	C119/B8	T42R
DR10-19	CM	C119/B8	T8R
DR3	CM	C134/B7	T42R
DR8,9	CM	C119/B8	T41R
DS	OR	B509/A3	
DS	OS	C611/F4	
DS	OS	C621/F4	
DS	IR	D113/A6	
DS	IR	D129/A5	
DSM	AMRST	C614/A7	
DT	LL	B106/A7	
DT	LL	B306/B4	
DT	OR	B512/G8	
DT	LL	C408/B4	
DTK	DTM	B106/G3	22
DTK	DTM	B306/E8	22
DTK	CM	B306/F1	C32R
DTK	DTM	C408/E8	22
DTK	CM	C408/F1	C32R
DVA	DTM	B420/D5	28
DVA	CM	C530/B9	C30R
DVA	CM	D622/B9	C30R
DVO	DTM	B420/C5	28
DVO	CM	C530/A9	C28R
DVO	CM	D622/A9	C28R
DO,1	MTFC	C607/C4	
DO,1	MTFC	D709/C4	
DO,1,2,4,7	OR	B509/F5	
DO,1,2,4,7	AMRST	C145/H2	
DO,1,2,4,7	AMRST	C151/C3	
DO,1,2,4,7	CM	C208/D4	T28R-T32R
DO,1,2,4,7	OS	C208/D7	
DO,1,2,4,7	OS	C610/C4	
DO,1,2,4,7	OS	C620/C4	
DO,1,2,4,7	IR	D113/G4	
DO,1,2,4,7	IR	D129/G5	
DO,1,2,4,7	CM	D213/D4	T28R-T32R
DO,1,2,4,7	OS	D213/D7	
DO,1,2,4,7	AMRST	D218/G2	
E-	PCMB	B204/B7	
E-	PCMB	B303/C2,F2	
E-	PCMB	C205/C8	
E-	PCMB	C306/A8-E8	
E-	PCMB	C405/C8	
E-	PCMB	D304/B7-E7	
E-	PCMB	D409/B2,F1	
E-	PCMB	D505/B1,F1	
ECM	CM	D207/D3	T38R
EF	TL	B410/G0	
EF	TL	C520/G0	
EF	TL	D612/G0	
EG	CM	D425/G0	C28L
EL	TL	B410/C0	
EL	TL	C520/C0	
EL	TL	D612/C0	
ELT	CM	C110/E5	T26R
EM	OS	C210/H9	
EMP	AMRST	C149/B6	
EN	CM	D411/D4	T39R
EP	PCMB	C405/C9,F9	
EP	PCMB	C410/B7,E7	
EP	OS	C615/E6	
EP	OS	C624/E8	
EP	PCMB	D505/B9,F9	
EP	PCMB	D508/B7,E7	
ER	TL	B410/A0	
ER	TL	C520/A0	
ER	TL	D612/A0	

* FOR EXPLANATION OF EQPT LOC; REFER TO SHEET NOTE 1 ON SHEET A701.

ISSUE	DWG SIZE	APPARATUS INDEX
5	C2	
A302	SFD-10-01	BELL LABORATORIES

PRINTED IN U.S.A.

RELAYS

DESIG	CKT	LOC	EQPT LOC *
ES	OR	B509/A3	
ES	OS	C611/F4	
ES	OS	C621/F4	
ES	IR	D113/A7	
ES	IR	D129/A6	
ETS	DTM	B209/G3	32
ETS	CM	C309/G3	C41R
ETO-2,9	CM	C120/C7-G7	T14+R
EV	ALL	C411/C7	
EV	ALL	D509/C7	
EVA	ALL	C411/G7	
EVA	ALL	D509/G7	
EX	CM	C136/F5	C17R
EX	CM	D214/F5	C17R
EXA	CM	C136/G3	C17R
EXA	CM	D214/G3	C17R
EXB	MTFC	C136/A1	
EXB	MTFC	D214/B1	
EXG	MTFC	C136/A1	
EXG	MTFC	D214/A1	
E0-2	MTFC	C607/C4	
E0-2	MTFC	D709/C4	
E0,1,2,4,7	OR	B509/F5	
E0,1,2,4,7	AMRST	C145/H3	
E0,1,2,4,7	AMRST	C151/C4	
E0,1,2,4,7	OS	C208/D7	
E0,1,2,4,7	CM	C208/E4	T28R-T32R
E0,1,2,4,7	OS	C61C/C4	
E0,1,2,4,7	OS	C620/C4	
E0,1,2,4,7	IR	D113/G5	
E0,1,2,4,7	IR	D129/G6	
E0,1,2,4,7	OS	D213/D7	
E0,1,2,4,7	CM	D213/E4	T28R-T32R
E0,1,2,4,7	AMRST	D218/G3	
E1,2	MFCS	C615/F2	
F	OR	B209/D9	
F	OGT	C309/D9	
F	IAO	C309/F9	
F	MTC	D306/A1	R39
F	IT	D306/A6	
F	MTC	D625/G4	R39
F	IT	D805/A0	
FA	DTM	B110/B7	13
FA	PRT	B611/G8	
FA	CM	C106/B7	C20R
FA	CM	D206/B7	C20R
FA--	TL	C311/B8	
FA--	TL	D306/A7	
FA--	TL	D625/A8	
FA-2	TL	B421/A7	
FAC	CM	C110/C4	T51L
FAK	DTM	B421/C4	23
FAK	CM	C311/C4	C31R
FAK	CM	D307/C4	C31R
FA1	DTM	B110/C6	13
FA1	CM	C106/C5	C20R
FA1	CM	D206/C6	C20R
FA1,2	PRT	B611/F7,G7	
FB	MTC	D306/B1	R39
FB	MTC	D625/E9	R39
FB--	TL	C311/B8,C8	
FB--	TL	D306/A7	
FB--	TL	D625/A8	
FBK	CM	C311/C4	C31R
FBK	CM	D307/C4	C31R
FB0-9	DTM	B202/D1-D3	47
FB0-9	CM	C304/C1-C3	C47R
FB10-19	DTM	B202/D4-D6	50
FB10-19	CM	C304/E4-C6	C50R
FB20-29	DTM	B202/D7-D9	S-3
FB20-29	CM	C304/C8,C9	F3
FC	PC	C108/B8	
FC	PC	C142/B3	
FC	MTC	C313/B0	R7
FC	PC	D134/B3	
FC	PC	D210/B9	
FC	MTC	D629/H0	R7
FC-	CM	C119/A3	F14-S5
FCD0,10,20	DTM	B105/D7	48,51,S-4
FCG	DTM	B425/E7	25
FCG	CM	C530/B4	C25R
FCG	CM	C535/D6	C25R
FCG	CM	D622/B4	C25R
FCG	CM	D627/D6	C25R
FCK	DTM	B105/H5	44
FCM0,10,20	DTM	B105/B7	47,50,S-3
FCR0,10,20	DTM	B105/D6	REL R
FCR1,11,21	DTM	B105/E6	REL R
FCR2,12,22	DTM	B105/F6	REL R
FCR3,13,23	DTM	B105/G6	REL R
FC1	PC	C108/B8	
FC1	PC	C142/C3	
FC1	PC	D134/C3	
FC1	PC	D210/B9	
FG0-2	CM	C306/F6	C43R
FG0-2	IR	D109/G7	
FG0-2	IR	D123/F7,G7	
FG0-2	CM	D211/B1,C1	C43R
FG0-2	CM	D304/F6	C43R
FIA	ORLM	B513/F7	
FIB	ORLM	B513/F7	
FLG	CM	D209/F8	C35R
FLG1	CM	D209/F8	C35R
FM	DTM	B415/E2	21
FM	CM	C517/A6	C38R
FM	CM	C525/E2	C38R
FM	CM	D617/D2	C38R
FMG	DTM	B205/F0	45
FMG	CM	C307/F0	C45R
FMG0,5	DTM	B205/B1,B3	46
FMG0,5	CM	C307/C1-C5	C46R
FMG10,15	DTM	B205/B4,B6	49
FMG10,15	CM	C307/C4-C6	C49R
FMG20,25	DTM	B205/B7,B8	S-2
FMG20,25	CM	C307/C8	F2
FMK	DTM	B205/G3	45
FMK	CM	C307/G3	C45R
FML	DTM	B205/E6	45
FML	CM	C307/E6	C45R
FMP	DTM	B415/B8	21
FMP	CM	C525/B8	C38R
FMP	CM	D617/B8	C38R
FM0-4	DTM	B205/C1-C6	45
FM0-4	CM	C307/C1-C6	C45R
FR	DTM	B107/G5	36
FR	DTM	B109/E5	36
FS	OR	B509/A4	
FS	OS	C611/F5	
FS	OS	C621/F5	
FS	IR	D113/A8	
FS	IR	D129/A7	
FSA	CM	C307/F6	C45R
FSA	CM	D209/A0	C35R
FS0-2	MTC	B202/G8	R35
FS0-2	MTC	C304/F6	R35
FS0-9	DTM	B203/B1-B4	46
FS0-9	CM	C305/B1-B4	C46R
FS10-19	DTM	B203/B5-B8	49
FS10-19	CM	C305/B5-B8	C49R
FS20-29	DTM	B203/F1-F4	S-2
FS20-29	CM	C305/F1-F4	F2
FTA0-4	DTM	B114/A2-F2	S-5
FTA0-4	CM	C403/A3	C11R
FTA0-4	CM	D417/A3,B3	C11R
FTB0-3	CM	C403/A3	C40L
FTB0-3	CM	D417/A3	C40L
FTB0-5	DTM	B114/A2-G2	39,S-5
FTB4,5	CM	C403/A3	C11R
FTB4,5	CM	D417/B3	C11R
FTCK	DTM	B205/E3	44
FTCK	DTM	B206/C6	44
FTCK	CM	C307/E3	C44R
FTCK1	DTM	B205/F4	44
FTCK1	CM	C305/E0	C44R
FTC0-9	DTM	B202/D1-D3	48
FTC0-9	CM	C119/B1	C48R
FTC0-9	CM	C304/D0-D2	C48R
FTC10-19	DTM	B202/D4-D6	51
FTC10-19	CM	C119/B1	C51R
FTC10-19	CM	C304/D3-D5	C51R
FTC20-29	DTM	B202/D8,D9	S-4
FTC20-29	CM	C119/B1	F4
FTC20-29	CM	C304/D7,D8	F4
FTK	MTC	D416/A3	R9
FTK1	DTM	B107/H3	36
FTK1	CM	C403/H6	C46L
FTK1	CM	D417/H6	C46L
FTL	CM	C403/B4	C30L
FTL	CM	D417/B4	C30L
FTN0-5	CM	D414/A8,B8	C47L
FTTB	CM	D414/E0	C40L
FTTB	CM	D418/B8	C40L
FTT0-3	CM	C403/A2	C41L
FTT0-3	CM	D417/A3	C41L
FTT0-5	DTM	B114/A4-G4	40,S-6
FTT4,5	CM	C403/A2	C12R
FTT4,5	CM	D417/B3	C12R
FT0-3	DTM	B107/A5	38
FT0-3	DTM	B426/A4	38
FT0-3	OR	B426/A8	
FT0-3	CM	C114/B3	C42L
FT0-3	OS	C114/B8	
FT0-3	AMRST	C150/D0	
FT0-3	CM	C150/H6	C42L
FUK	MTC	D416/B3	R9
FUL	CM	C403/C3	C30L
FUL	CM	D417/C4	C30L
FUN0-9	CM	D414/B8	C47L
FUT0-9	DTM	B114/A0-G0	39
FUT0-9	CM	C403/B2	C41L
FUT0-9	MTFC	D417/B1,C1	
FUT0-9	CM	D417/B3,C3	C41L
FU0,1,2,4,7	DTM	B107/B5	38
FU0,1,2,4,7	DTM	B426/A4	38
FU0,1,2,4,7	OR	B426/B8	
FU0,1,2,4,7	CM	C114/C3	C42L
FU0,1,2,4,7	OS	C114/C8	
FU0,1,2,4,7	AMRST	C150/E0	
FU0,1,2,4,7	CM	C150/H7	C42L
FVD	CM	D208/D5	T26R
F0,1,2,4,7	OR	B509/F5	
F0,1,2,4,7	AMRST	C145/H4	
F0,1,2,4,7	AMRST	C151/C5	
F0,1,2,4,7	CM	C208/E4,F4	T28R-T32R
F0,1,2,4,7	OS	C208/E7	
F0,1,2,4,7	OS	C610/C5	
F0,1,2,4,7	OS	C620/C5	
F0,1,2,4,7	IR	D113/G5	
F0,1,2,4,7	IR	D129/G7	
F0,1,2,4,7	CM	D213/E4	T28R-T32R
F0,1,2,4,7	OS	D213/E7	
F0,1,2,4,7	AMRST	D218/G4	
F1	MTC	B422/C7	R40
F1	MTC	C532/E5	R40
F1	MTC	D624/E5	R40
F1	MTC	D804/F0	R40
F1	IT	D805/A0	
F1,Z	MFCS	C615/F2	
GA0-2	PRTC	B604/A2-A6	
GB	CM	D413/A5	C27L
GBA	CM	C205/B3	C18L
GBB	CM	C205/H3	C18L
GB0-2	PRTC	B604/A1-A5	
GC	DTM	B415/F9	42
GC	CM	C525/D9	C38L
GC	CM	D617/D9	C38L
GCA	DTM	B415/G9	S-5
GCA	CM	C525/E9	C11R
GCA	CM	D617/E9	C11R
GCA0-2	PRTC	B604/A0-A4	
GC0-2	PRTC	B604/B2-B5	
GK	DTM	B108/F7	36
GK	PRTC	B609/E6	
GK1	PRTC	B609/F6	
GLH	DTM	B421/E6	24
GLH	DTM	B425/F7	24
GLH	CM	C530/A5	C26R
GLH	CM	D622/A5	C26R
GLH1	DTM	B421/E6	24
GLH1	CM	C530/A7	C26R
GLH1	CM	D622/A7	C26R
GR	MTC	B608/F3	R50
GR0-2	PRTC	B609/F1	
GS	OR	B509/A4	
GS	OS	C611/F5	
GS	OS	C621/F6	
GS	IR	D113/A8	
GS	IR	D129/A8	
GSA1-3	CM	C519/A2-C2	C47R
GSA11-13	CM	C519/A3-C3	C50R
GSA14,15	CM	C519/C3,D3	C51R
GSA21-25	CM	C519/A3-D3	F3,4
GSA4,5	CM	C519/C2,D2	C48R
GS0-2	PRTC	B604/C0-C4	
GS1-5	CM	C519/A1-D1	C38R
GT	OR	B511/B0	
GT	PC	C107/C6	
GT	CM	C535/F4	C25R
GT	PC	D207/C6	
GT	CM	D627/F4	C25R
GTA	CM	C530/F5	C26R
GTA	CM	D622/F5	C26R
GTK	CM	C530/B7	C27R
GTK	CM	D622/B7	C27R
GTL	CM	C214/C0	C23L
GTL1	DTM	B428/E3	38
GTL2	CM	C214/C0	C45L
GTL2,3	DTM	B428/G3,F3	29
GTU	DTM	B428/G3	38
GT1	DTM	B421/G3	24
GT1	OR	B511/A8	
GT1	CM	C531/C6	C26R
GT1	CM	D623/C6	C26R
GT2,3,5	CM	C530/B3,G4,F7	C26R
GT2,3,5	CM	D622/G3,G4,F7	C26R
GT5	CM	C604/C0	C26R
GT5	CM	D704/C0	C26R
G0-4	TLC	B408/A0-D0	
G0-4	TLC	C510/A0-D0	
G0-4	TLC	D610/A0-D0	
G0,1,2,4,7	OR	B509/F7	
G0,1,2,4,7	AMRST	C145/H5	
G0,1,2,4,7	AMRST	C151/C6	
G0,1,2,4,7	OS	C208/E7	
G0,1,2,4,7	CM	C208/F4	T28R-T32R
G0,1,2,4,7	OS	C610/C5	
G0,1,2,4,7	OS	C620/C5	
G0,1,2,4,7	IR	D113/G6	
G0,1,2,4,7	IR	D129/G8	
G0,1,2,4,7	OS	D213/E7	
G0,1,2,4,7	CM	D213/F4	T28R-T32R
G0,1,2,4,7	AMRST	D218/G5	
G1	MTC	B608/H3	R50
H	IR	D104/H7	
H	IR	D126/G5	
H	IT	D808/A0	
HB	LLDC	B112/C3	
HB0-9	NG	D410/B7	
HC	LLDC	B112/F3	
HD	PRT	B608/G7	
HDK	PRT	B605/H2	
HFA	DTM	B110/A7	13
HFA	CM	C106/A7	C20R
HFA	CM	D206/A7	C20R
HGA0-9	LL	B107/D8	
HGA0-9	LL	C409/D3	
HGA0-9	LL	C411/G3	
HGA0-9	LL	D507/D3	
HGA0-9	LL	D509/G3	
HGB0-9	LL	B107/D8	
HGB0-9	LL	C409/D3	
HGB0-9	LL	C411/G3	
HGB0-9	LL	D507/D3	
HGB0-9	LL	D509/G3	
HGC1,2	DTM	B426/F2	29
HGG	DTM	B109/E5	37
HGG	DTM	B306/F6	37
HGG	DTM	C408/F7	37
HGK	MTC	B107/E0	R9
HGK	DTM	B107/E6	23
HGK	CM	C409/E5	C31R
HGK	CM	C411/E0	C31R
HGK	MTC	C532/H5	R9
HGK	MTC	C532/H5	R9
HGK	MTC	D416/E3	R9
HGK	CM	D507/F5	C31R
HGK	CM	D509/E0	C31R
HGK	MTC	D624/H5	R9
HGL	CM	C403/F3	C30L
HGL	CM	D417/F4	C30L
HGN0-9	CM	D414/C8	C50L
HGR	DTM	B109/H1	37
HGT0-9	DTM	B107/D5	37
HGT0-9	DTM	B109/A1-G1	37
HGT0-9	CM	C403/E2	C45L
HGT0-9	MTFC	D417/E1	
HGT0-9	CM	D417/E3	C45L
HGT0-9	CM	D624/G9	C45L
HG0,1,2,4,7	OR	B426/E8	
HG0,1,2,4,7	CM	C114/E3	C44L
HG0,1,2,4,7	OS	C114/F8	
HG0,1,2,4,7	AMRST	C150/C0	
HG0,1,2,4,7	CM	C150/H5	C44L
HMS1	DTM	B421/F6	27
HMS1	MTC	B421/F7	R42
HMS1	MTC	B425/H3	R42
HMS1	DTM	B425/H4	27
HMS1	CM	C156/E0	C30R
HMS1	CM	C531/A6	C30R
HMS1	MTC	C535/G3	R42
HMS1	CM	C535/G4	C30R
HMS1	CM	D623/A6	C30R
HMS1	MTC	D627/G3	R42
HMS1	CM	D627/G4	C30R
HMT	DTM	B420/B3	26
HMT	CM	C530/D5	C28R
HMT	CM	D622/D5	C28R
HMT1	DTM	B420/C3	27
HMT1	CM	C530/E7	C28R
HMT1	CM	D622/E7	C28R
HN0,1,2,4,7	CM	C208/G3	T34R
HN0,1,2,4,7	CM	D213/G3	T34R
HS	OR	B509/A5	
HS	OS	C611/F6	
HS	OS	C621/F6	
HS	IR	D113/A8	
HS	IR	D129/A9	
HTK	DTM	B109/F5	37
HTK	DTM	B306/G8	37
HTK	DTM	C408/G8	37
HTK1	DTM	B107/E6	37
HTK1	CM	C403/H6	C45L
HTK1	CM	D417/H6	C45L
HTR	DTM	B111/G4	24
HTR	CM	C133/C8	C27R
HTR	CM	C137/E3	C27R
HTR	CM	D215/E3	C27R
HTT	DTM	B111/F8	11
HTT	CM	C137/F8	C15R
HTT	CM	D215/F8	C15R
HTUK	CM	D411/G4	C31L
H0-9	LL	C411/A5,G5	
H0-9	ALL	C411/A9,G9	
H0-9	LL	D509/A5,F5	
H0-9	ALL	D509/A9,F9	

* FOR EXPLANATION OF EQPT LOC; REFER TO SHEET NOTE 1 ON SHEET ' 31.

APPARATUS INDEX	DWG SIZE C2	ISSUE 5
BELL LABORATORIES SFD-10-01		A303

RELAYS

DESIG	CKT	LOC	EQPT LOC *
H0,1,2,4,7	OR	B509/F7	
H0,1,2,4,7	AMRST	C145/H6	
H0,1,2,4,7	AMRST	C151/C7	
H0,1,2,4,7	OS	C208/F7	
H0,1,2,4,7	CM	C208/G4	T28R-T32R
H0,1,2,4,7	OS	C610/E6	
H0,1,2,4,7	OS	C620/C6	
H0,1,2,4,7	IR	D113/G6	
H0 1,2,4,7	IR	D129/G9	
H0,1,2,4,7	OS	D213/F7	
H0,1,2,4,7	CM	D213/G4	T28R-T32R
H0,1,2,4,7	AMRST	D218/G6	
IAOC	MTC	B422/A9	
IAOC	MTC	C532/A9	
IAOC	MTC	D624/A9	
IM	LL	B106/C7	
IM	MTRC	B106/D8	
IM	PC	C108/C8	
IM	MTRC	C108/D7	
IM	PC	C142/G2	
IM	MTRC	C142/G6	
IM	PC	D134/G2	
IM	MTRC	D134/G6	
IM	PC	D210/C9	
IM	MTRC	D210/D7	
INC	CM	D208/F5	T51L
INT	PRF	C607/D2	
IPC0-9	CM	C119/B8	T11+R
IRB-	AMRST	D117/C5	
IRB0	AMRST	D117/B5	
IRP-	AMRST	D117/B5	
IRP0	AMRST	D117/A5	
IRST	AMRST	D116/F0	
ITRA	CM	C119/B8	T41R
ITR1,2	CM	C108/A3	C34R
ITR1,2	CM	D210/A3	C34R
JB	CM	D808/D2	REL R
JCA0-9	TL	B411/E0	
JCA0-9	TL	C521/D0	
JCA0-9	TL	D613/D0	
JCB0-9	TL	B411/E0	
JCB0-9	TL	C521/E0	
JCB0-9	TL	D613/E0	
JCK	DTM	B417/H1	23
JCK	DTM	B418/E0	23
JCK	CM	C527/H1	C31R
JCK	CM	C528/E0	C31R
JCK	CM	D619/H1	C31R
JCK	CM	D620/E0	C31R
JCX0-9	TL	B411/F0	
JCX0-9	TL	C521/E0	
JCX0-9	TL	D613/E0	
JC0-29	TL	B411/A0-D0	
JC0-29	TL	C521/A0-D0	
JC0-29	TL	D613/A0-D0	
JGCK	DTM	B423/E6	26
JGCK	CM	C533/D6	C29R
JGCK	CM	D625/D6	C29R
JG0-3	DTM	B407/B1-G1	42
JG0-3	CM	C509/B1-G1	C38L
JG0-3	CM	D609/A1-G1	C38L
JG0-4	DTM	B406/B1-F1	42
JG0-4	CM	C508/B1-F1	C38L
JG0-4	CM	D608/B1-F1	C38L
JHM	MTC	C533/H5	R39
JHM	MTC	D625/H5	R39
JLE	DTM	B405/E6	34
JLE	CM	C507/C6	C36L
JLE	CM	D607/C6	C36L
JLO	DTM	B405/E6	34
JLO	CM	C507/C6	C36L
JLO	CM	D607/C6	C36L
JS	OR	B509/A5	
JS	OS	C611/F7	
JS	OS	C621/F7	
JS	IR	D113/A8	
JSA	TL	B410/E0	

DESIG	CKT	LOC	EQPT LOC *
JSA	TL	C520/E0	
JSA	TL	D612/E0	
JSB	TL	B410/E0	
JSB	TL	C520/E0	
JSB	TL	D612/E0	
JSE	DTM	B405/D6	34
JSE	CM	C507/D6	C36L
JSE	CM	D607/D6	C36L
JSO	DTM	B405/D6	34
JSO	CM	C507/D6	C36L
JSO	CM	D607/D6	C36L
JSQ0-5	DTM	B405/B4-E4	34
JSQ0-5	CM	C507/A3-D3	C36L
JSQ0-5	CM	D607/A3-D3	C36L
JSX	TL	B410/E0	
JSX	TL	C520/E0	
JSX	TL	D612/E0	
JSXA	TL	B410/F0	
JSXA	TL	C520/F0	
JSXA	TL	D612/F0	
JXP	DTM	B423/F6	26
JXP	DTM	B424/C3	26
JXP	CM	C533/F6	C29R
JXP	CM	D625/F6	C29R
JXPA	DTM	B420/D6	27
JXPA	CM	C531/D3	C30R
JXPA	CM	D623/D3	C30R
JXP1	DTM	B420/E6	27
JXP1	CM	C531/C3	C30R
JXP1	CM	D623/C3	C30R
J0,1,2,4,7	OR	B509/F7	
J0,1,2,4,7	AMRST	C145/H6	
J0,1,2,4,7	AMRST	C151/C9	
J0,1,2,4,7	OS	C208/F7	
J0,1,2,4,7	CM	C208/G4	T28R-T32R
J0,1,2,4,7	OS	C610/C6	
J0,1,2,4,7	OS	C620/C6	
J0,1,2,4,7	OS	D213/F7	
J0,1,2,4,7	CM	D213/G4	T28R-T32R
J0,1,2,4,7	AMRST	D218/G7	
K	MTC	C144/A3	R8
K	MTC	D217/A3	R8
KA	MTC	B603/E9	R8
KA	MTC	C115/A0	R8
KA	CM	C209/F5	T29R
KA	MTC	D212/B0	R8
KA0,1,2,4,7	AMRST	C152/B1	
KB	MTC	B603/F9	R8
KB	MTC	C115/B0	R8
KB	MTC	D212/B0	R8
KBC	CM	C209/F5	T30R
KB0,1,2,4,7	AMRST	C152/D1	
KC	MTC	B603/F9	R8
KC	MTC	C115/B0	R8
KC	MTC	D212/C0	R8
KCH	MTC	B405/H1	R35
KCH	MTC	B412/F1	R35
KCH	MTC	C507/G0	R35
KCH	MTC	C522/F1	R35
KCH	MTC	D607/G0	R35
KCH	MTC	D614/F1	R35
KCS0-3	MTC	B304/E2-G2	R10
KCS0-3	MTC	B305/E2-G2	R10
KCS3	MTC	C111/F2	R10
KCS4,5	MTC	B304/F0,G0	L45
KCS4,5	MTC	B305/F0	L45
KCS6	MTC	C111/F2	L45
KC0,1,2,4,7	AMRST	C152/E1	
KD	MTC	C115/C0	R8
KD	MTC	D212/C0	R8
KDE	CM	C209/F5	T29R
KD0,1,2,4,7	AMRST	C152/F1	
KE	MTC	C115/C0	R8
KE	MTC	D212/D0	R8
KE0,1,2,4,7	AMRST	C152/G1	
KF	MTC	C115/D0	R8
KF	MTC	D212/E0	R8

DESIG	CKT	LOC	EQPT LOC *
KFG	CM	C209/G5	T30R
KFS	MTC	B202/H4	R36
KFS	MTC	C304/G4	R36
KFTU	MTC	B107/G1	R11
KF0,1,2,4,7	AMRST	C153/A1	
KG	MTC	C115/D0	R8
KG	CM	C209/D5	T28R
KG	MTC	D212/E0	R8
KGS1,2	CM	C209/D5	T31R
KG0,1,2,4,7	AMRST	C153/B1	
KH	MTC	C115/E0	R8
KH	MTC	D212/F0	R8
KHGT	MTC	B107/C1	R11
KHJ	CM	C209/G5	T29R
KH0,1,2,4,7	AMRST	C153/C1	
KJ	MTC	C115/E0	R8
KJ	MTC	D212/F0	R8
KJSQ	MTC	B405/G2	R35
KJSQ	MTC	C507/H1	R35
KJSQ	MTC	D607/G1	R35
KJ0,1,2,4,7	AMRST	C153/D1	
KK	MTC	C115/F0	R8
KK	CM	C209/D7	T28R
KK	MTC	D212/G0	R8
KKL	CM	C209/H5	T30R
KK0,1,2,4,7	AMRST	C153/E1	
KL	MTC	C115/G0	R8
KL	MTC	D212/G0	R8
KL0,1,2,4,7	AMRST	C153/F1	
KMT9	MTC	B202/H3	R36
KMT9	MTC	C304/H2	R36
KM7	AMRST	C153/G1	
KOR	MTC	C110/E2	R43
KOS	MTC	C204/A0	R12
KOSA	MTC	C204/A2	R12
KP	OS	C611/F0	
KP	SR	D112/F5	
KP1,2	SR	D112/G7	
KRA	MTC	B206/D1	R36
KRA	MTC	C516/B6	R36
KRC1,2	MTC	D415/E1	R10
KRS	MTC	D628/G2	R39
KS	OR	B509/A6	
KS	OS	C611/F7	
KS	OS	C621/F7	
KS	IR	D113/A8	
KTF	MTC	D211/H3	R36
KTR	PRT	B607/E1	
KTS	MTC	B208/H8	R36
KV	MTC	B107/F1	R11
KVG1,2	MTC	B107/G1	R11
K0,1,2,4,7	OR	B509/F7	
K0,1,2,4,7	AMRST	C145/H7	
K0,1,2,4,7	AMRST	C151/F0	
K0,1,2,4,7	CM	C208/G4	T28R-T32R
K0,1,2,4,7	OS	C208/G7	
K0,1,2,4,7	OS	C610/C7	
K0,1,2,4,7	OS	C620/C7	
K0,1,2,4,7	CM	D213/G4	T28R-T32R
K0,1,2,4,7	OS	D213/G7	
K0,1,2,4,7	AMRST	D218/G7	
K1-3	MTC	C144/E3	R7
K1-3	MTC	D217/E3	R7
L	TL	B410/C0	
L	OR	B503/B8	
L	OR	C108/D7	
L	AMRST	C149/A2	
L	TL	C520/C0	
L	IR	C627/F6	
L	IR	D125/F8	
L	IR	D126/D1	
L	TL	D612/C0	
LA	TL	B410/B0	
LA	CM	C403/B8	C30L
LA	TL	C520/B0	
LA	CM	D417/B8	C30L
LA	TL	D612/B0	

DESIG	CKT	LOC	EQPT LOC *
LB	TL	B410/B0	
LB	TL	C520/B0	
LB	TL	D612/B0	
LB	CM	D623/G6	C32L
LB	CM	D806/C4	C32L
LBT	CM	C533/E0	C29R
LBT	CM	C534/D3	C29R
LBT	CM	D625/E0	C29R
LBT	CM	D626/D3	C29R
LBT	CM	D806/E1	C29R
LBTA	CM	D623/E6	C31R
LBTA	CM	D806/D2	C31R
LC	MTC	C311/B1	R39
LC	MTC	C528/H7	R39
LC	MTC	C529/H7	R39
LC	MTC	D307/B1	R39
LC	MTC	D620/H7	R39
LC	MTC	D621/H7	R39
LCH	PRF	C607/E3	
LCH	CM	D306/G4	
LCK	DTM	B418/G8	23
LCK	DTM	B419/G8	23
LCK	DTM	B421/C1	23
LCK	CM	C311/B4	C31R
LCK	CM	C528/G7	C31R
LCK	CM	C529/G7	C31R
LCK	CM	D307/B4	C31R
LCK	CM	D620/G7	C31R
LCK	CM	D621/G7	C31R
LCM	PRT	B607/F1	
LC0-9	TL	B418/B8-F8	
LC0-9	TL	B419/C8-F8	
LC0-9	TL	B421/A3	
LC0-9	TL	C311/A8	
LC0-9	TL	C528/C8-E8	
LC0-9	TL	C529/C8-E8	
LC0-9	TL	D307/A8	
LC0-9	TL	D620/C8-E8	
LC0-9	TL	D621/C8-E8	
LD	OS	C610/G1	
LDT	DTM	B111/E3	12
LDT	CM	C136/F9	C16R
LDT	CM	D214/F9	C16R
LEA	CM	C119/B8	T38R
LEA	CM	D211/C5	T38R
LEB	CM	C119/B8	T39R
LEB	CM	D211/E5	T39R
LFK	DTM	B107/H5	22
LFK	CM	C409/B7	C32R
LFK	CM	C410/C2,E2	C32R
LFK	CM	D507/B7	C32R
LFK	CM	D508/C3,E3	C32R
LFKA	CM	C410/B2,D2	C7L
LFKA	CM	D508/B3,D3	C7L
LFT0-5	MTC	C410/G9	RR4
LFT0-5	MTC	D508/G9	RR4
LF0-9	CM	D808/D5-G5	REL R
LGCK	DTM	B423/E2	26
LGCK	DTM	B424/D2	26
LGT	CM	D418/B1	C27R
LG00-11	LL	B107/F8	
LG00-11	LL	C409/A1,B1	
LG00-11	LL	D507/A1	
LHM	MTC	B422/F2	R40
LHM	MTC	C532/E2	R40
LHM	MTC	D624/D3	R40
LHMA	MTC	B422/D2	R40
LHMA	MTC	C532/D2	R40
LHMA	MTC	D624/D3	R40
LHMT	MTC	B422/G5	L45
LHMT	MTC	C532/F5	L45
LHMT	MTC	D624/E5	L45
LHT	DTM	B420/B9	24
LHT	CM	C531/E6	C46L
LHT	CM	D209/C5	C46L
LHT	CM	D623/D6	C46L
LI	MTC	D426/E2	R10

DESIG	CKT	LOC	EQPT LOC *
LI	CM	D623/F6	C32L
LIN	CM	D306/A3	C26L
LIT	CM	C533/F0	C29R
LIT	CM	C534/D3	C29R
LIT	CM	D625/F0	C29R
LIT	CM	D626/D3	C29R
LIT	CM	D806/F1	C29R
LK	DTM	B410/D3	23
LK	CM	C520/D3	C31R
LK	AMRST	D104/G0	
LK	SR	D112/A8	
LK	CM	D612/D3	C31R
LK1	CM	C604/C5	C33R
LK1	MTC	C604/F5	R40
LK1	CM	D704/C5	C33R
LK1	MTC	D704/F5	R40
LK1	CM	D806/B8	C33R
LK2	MTC	B502/F3	R3
LK2	MTC	C605/F1	R3
LK2	MTC	D705/F1	R3
LLB	CM	B303/H2	C32R
LLB	CM	C405/H1,H3	C32R
LLB	CM	D505/H1	C32R
LLC1,2	DTM	B205/F7	21
LLC1,2	CM	C307/E6,H5	C32R,C38L
LLC1,2	CM	D209/B8,C8	C32R,C38L
LLC3	CM	C307/H5	C30R
LLC3	CM	D209/C8	C30R
LLI	CM	D408/E4	C30L
LLJ	MTC	B423/H2	L45
LLJ	MTC	C533/G4	L45
LLJ	MTC	D625/G4	L45
LLT	DTM	B414/G2	26
LLT	DTM	B423/D3	26
LLT	CM	C524/G2	C29R
LLT	CM	D616/G2	C29R
LLTA	DTM	B414/H2	27
LLTA	DTM	B423/D4	27
LLTA	CM	C524/H2	C30R
LLTA	CM	D616/H2	C30R
LL0,1,2,4,7	OR	B427/D8	
LL0,1,2,4,7	CM	C111/E5	C36R
LNT	CM	D809/E4	REL R
LO	LL	B306/B4	
LO	LL	C408/B3	
LOT	CM	B306/G1	C32R
LOT	CM	C408/G1	C32R
LOT1	CM	B306/F3	C32R
LOT1	CM	C408/F3	C32R
LPA	CM	C119/B8	T38R
LPA	CM	C128/B2	T38R
LPA	CM	C133/F1	T38R
LPA	CM	D211/B5	T38R
LPB	CM	C119/B8	T39R
LPB	CM	C128/B2	T39R
LPB	CM	C133/F1	T39R
LPB	CM	D211/D5	T39R
LR	OS	C213/C8,G8	
LR	IR	D114/B2	
LR	CM	D114/C7	C17R
LR	IR	D130/B9	
LR	CM	D131/E8	
LS	OR	B509/A6	
LS	OS	C611/F8	
LS	OS	C621/F8	
LS	IR	D113/A8	
LSD	PRT	B607/D1	
LST	OS	C212/F9	
LST	MTC	D426/E1	R9
LT	PRT	B603/D7	
LT	CM	C110/D5	T26R
LT	CM	D208/E5	T26R
LTA	CM	C119/B8	T38R
LTA	CM	D211/B5	T38R
LTB	CM	C119/B8	T39R
LTB	CM	D211/E5	T39R
LTR	DTM	B421/G3	24

* FOR EXPLANATION OF EQPT LOC; REFER TO SHEET NOTE 1 ON SHEET A701.

ISSUE	DWG SIZE	APPARATUS INDEX
5	C2	
A304	SFD-10-01	BELL LABORATORIES

PRINTED IN U.S.A.

RELAYS

DESIG	CKT	LOC	EQPT LOC *
LTR	CM	C531/B6	C27R
LTR	CM	D623/B6	C27R
LV0-9	TL	C311/E8	
LV0-9	ALL	C411/C6-E6	
LV0-9	TL	D307/E8	
LV0-9	ALL	D509/C6-E6	
LV2	TL	B421/A5	
LV2-9	TL	C311/E8	
LV2-9	TL	D307/E8	
LX	TL	B410/B0	
LX	TL	C520/C0	
LX	TL	D612/C0	
LXP	DTM	B423/F2	26
LXP	DTM	B424/G3	26
LXP	CM	C533/F1	C29R
LXP	CM	C534/F4	C29R
LXP	"	D426/C0	C29R
LXP		D625/F1	C29R
LXP		D626/F4	C29R
LXPA	DTM	B420/E3	27
LXPA	CM	C531/D6	C30R
LXPA	CM	D623/D6	C30R
LXP1	DTM	B420/E3	27
LXP1	CM	C531/C6	C30R
LXP1	CM	D623/C6	C30R
L0-4	LL	B102/G4	
L0-4	LL	B503/C2	
L0-4	LL	C616/D2	
L0-4	LL	C617/E7	
L0-4	LL	C626/D2	
L0-4	LL	C627/E7	
L0-4	LL	D110/C2	
L0-4	LL	D111/C7	
L0-4	LL	D124/C1	
L0-4	LL	D125/D7	
L0-4	LL	D127/D7	
L0-4	LL	D706/H8	
L0,1,2,4,7	OR	B509/F7	
L0,1,2,4,7	AMRST	C145/H8	
L0,1,2,4,7	AMRST	C151/F2	
L0,1,2,4,7	CM	C208/G4	T28R-T32R
L0,1,2,4,7	OS	C208/G7	
L0,1,2,4,7	OS	C610/C7	
L0,1,2,4,7	OS	C620/C7	
L0,1,2,4,7	CM	D213/G4	T28R-T32R
L0,1,2,4,7	OS	D213/G7	
L0,1,2,4,7	AMRST	D218/G8	
L5D	OS	C212/F9	
M	TLC	B204/B3	
M	OR	B430/D5	
M	TLC	C306/A3	
M	TLC	D304/A3	
MA	LLMC	B103/B1,F1	
MA	LLMC	B104/E5	
MA	ORMC	C105/B1	
MA	IRMC	C105/F1	
MA	ORMC	D205/B1	
MA	IRMC	D205/F1	
MAK	DTM	B103/H2	15
MAK	DTM	B104/G5	15
MAK	CM	C105/H2	C20R
MAK	CM	D205/H2	C20R
MAK1	DTM	B202/D0	22
MAK1	DTM	B204/C0	22
MAK1	CM	C304/C0	C44R
MAK1	CM	C306/B0	C44R
MAK1	CM	D304/B0	C44R
MAN	DTM	B429/G2	31
MAN	OR	B429/G6	
MAN	OR	B507/G3	
MAN	DTM	C704/D1	31
MAN	OR	C704/D3	
MA1-	LLC	B303/D1-G7	
MA1-	LLC	C405/D0-G7	
MA1-	LLC	D505/D0-G6	
MA1-,2-	OSC	C207/B4	
MA1,2	TL	B204/A3	

DESIG	CKT	LOC	EQPT LOC *
MA1,2	TLC	C306/A2	
MA1,2	TLC	D304/A3	
MA2-	LLC	B302/A7-G7	
MA2-	LLC	C404/A7-G7	
MA2-	LLC	D504/A7-G7	
MB	LLMC	B103/B1,F1	
MB	LLMC	B104/E5	
MB	DTM	B110/C2	15
MB	OR	B209/C9	
MB	OR	B430/E5	
MB	OR	B513/F9	
MB	PRT	B605/H0	
MB	PRT	B611/B7	
MB	ORMC/IRMC	C105/B0,F0	
MB	CM	C106/C2	C20R
MB	OR	C155/C8	
MB	OS	C207/G3	
MB	IR	D114/G4	
MB	ORMC/IRMC	D205/B0,F0	
MB	CM	D206/C2	C20R
MB	PCMB	D408/F0	
MB-	PCMB	B110/H5	
MBK	CM	C211/D6	T48R
MBK1,2	CM	C211/C2	T48R
MBK3-5	CM	C211/H3,G3	T47R
MBN	AMRST	B430/F3	
MBS0-2,9	CM	C129/A8-C9	T48R
MBS0-9	CM	C119/B8	T48R
MBS1	CM	C128/D8	T48R
MB0,1,2,4,7	OS	C211/B8	
MB1-,2-	LLC	B302/A7-G7	
MB1-,2-	OSC	C207/B4	
MB1-,2-	LLC	C404/A7-G7	
MB1-,2-	LLC	D504/A7-G7	
MB1,2	TLC	B204/A2	
MB1,2	TLC	C306/A2	
MB1,2	TLC	D304/A2	
MC	MTC	B405/B0	R3
MC	ORMC/IRMC	C105/B0,F0	
MC	MTC	C507/A0	R3
MC	TRC	C607/D0	
MC	ORMC/IRMC	D205/B0,F0	
MC	MTC	D607/A0	R3
MC	TRC	D709/D0	
MCA	AMRST	C149/C1	
MCA-	NGC	D409/C0,G0	
MCB	AMRST	C149/D1	
MCB-	NGC	D408/A1	
MCB0-2	DTM	B110/D4	15 OR S-6
MCB0,1	CM	C106/D5	C20R
MCB0,1	CM	D206/D5	C20R
MCB3	DTM	B110/D4	15
MCC-	NGC	D408/A1	
MCD-	NGC	D408/B1	
MCE	AMRST	C149/D1	
MCE-	NGC	D408/B1	
MCK	DTM	B103/H3	15
MCK	DTM	B104/G5	15
MCK	CM	C105/H3	C20R
MCK	CM	D205/H3	C20R
MCN	DTM	B429/H3	31
MCN	OR	B507/H4	
MCR	TRC	C607/D0	
MCR	TRC	D709/D0	
MC1	TLC	B204/A1	
MC1	TLC	C306/A1	
MC1	TT	C604/F4	
MC1	TLC	D304/A1	
MC1	TT	D704/F4	
MC1-,2-	OSC	C207/B4	
MC23	MTC	C410/G5	R21
MC23	MTC	D508/H5	RR4
MD	ORMC/IRMC	C105/B0,F0	
MD	CM	C208/G4	REL R
MD	ORMC/IRMC	D205/B1,F1	
MDI	CM	C120/B7	T40R
MDI	JLK	C120/C8	

DESIG	CKT	LOC	EQPT LOC *
MDK	CM	C306/B0	C32R
MDK	CM	D304/B0	C32R
MD1,2	TLC	B204/A1	
MD1,2	TLC	C306/A0	
MD1,2	TLC	D304/A1	
MD7	CM	C208/G4	REL R
MD7	CM	D213/G4	REL R
ME	ORMC/IRMC	C105/B0,F0	
ME	ORMC/IRMC	D205/B1,F1	
MF	DTM	B105/B5	14
MF	OR	B508/F4	
MF	CM	C111/C5	T40R
MF	AMRST	D116/C8	
MFK	CM	C410/A3,D3	C7L
MFK	CM	D508/A3,D3	C7L
MFL	CM	C410/A3,D3	C7L
MFL	CM	D508/A3,D3	C7L
MF1	OR	B508/A1	
MIR1	AMRST	D116/F9	
MJ	ALM	B106/H7	
MJ	ALM	B110/G5,A9	
MJ	ALM	B513/D7	
MJ	ALM	B609/G4	
MJ	JLK	B611/E5	
MJ	ALM	B611/F4	
MJ	ALM	C106/B9	
MJ	ALM	C107/C9	
MJ	ALM	C142/E4	
MJ	ALM	D134/E4	
MJ	ALM	D206/B9	
MJ	ALM	D408/G3	
MJ1	ALM	B513/D7	
MJ1	ALM	B611/G4	
MK	LL	B106/D5	
MK	PC	C104/B7,F7	
MK	PC	C107/A6	
MK	PC	D204/B7,F7	
MK	PC	D207/B6	
MKA-	MTFC	C607/C6	
MKA-	MTFC	D709/C7	
MKB-	MTFC	C149/G8	
MKB-	MTFC	C607/C6	
MKB-	MTFC	D709/B7	
MKB1-	MTFC	C149/G8	
MKB1-	MTFC	C607/C6	
MKB1-	MTFC	D709/B7	
MKT0,1	AMRST	C149/E4	
MKT2,3	MTC	C532/H4	R2,L45
MKT2,3	MTC	D624/H4	R2,L45
MKT4	MTC	C532/H4	RR21
MKT4	MTC	D624/H4	RR21
MLF	DTM	B105/B5	13
MLVF	MTC	D416/H8	R9
MLVM	MTC	D416/G8	R9
MM	AMRST	C148/A2	
MN	ALM	B204/A9	
MN	ALM	B303/A0,E0	
MN	ALM	B513/B7	
MN	ALM	C156/F3	
MN	ALM	C306/A9	
MN	ALM	C405/A0,E0	
MN	ALM	C535/H8	
MN	ALM	D304/A9	
MN	ALM	D409/A0,E0	
MN	ALM	D505/A0,E0	
MN	ALM	D627/H7	
MN	CM	D808/D2	REL R
MN1	ALM	B513/C7	
MN1	CM	D808/E2	REL R
MN2	JLK	B611/E6	
MN2	JLK	C156/F0	
MON	CM	C148/A7	C17R
MON	MTFC	C148/F6	
MON1	CM	C148/C7	C17R
MOR	MTFC	C156/E8	
MO1	MTC	B502/D1	R3
MO1	MTC	C605/G5	R3

DESIG	CKT	LOC	EQPT LOC *
MO1	MTC	D705/G5	R3
MP-	PCMB	B204/B6-E6	
MP-	PCMB	B303/C2,G2	
MP-	PCMB	C205/B8,E8	
MP-	PCMB	C306/A7-D7	
MP-	PCMB	C405/C1,G1	
MP-	PCMB	D304/A7-D7	
MP-	PCMB	D409/C2,G1	
MP-	PCMB	D505/C1,G1	
MPC1,2	AMRST	C155/F6	
MPP	PCMB	C405/C9,G9	
MPP	PCMB	C410/B7,E7	
MPP	PCMB	D505/C9,G9	
MPP	PCMB	D508/B7,E7	
MPR	MTFC	B502/H4	
MPR	MTFC	C607/B6	
MPR	MTFC	D709/B6	
MPR1	MTFC	B502/H4	
MPT	CM	D808/F0	REL R
MR	CM	C406/E4	C27R
MR	AMRST	D116/B8	
MR	CM	D510/E4	C27R
MRA	CM	C406/G5	C27R
MRA	CM	C407/G5	C27R
MRA	CM	D510/G5	C27R
MRA	CM	D511/G5	C27R
MRL	DTM	B111/F3	11
MRL	MTC	B502/B3	R4
MRL	OR	B512/D8	
MRL	MTC	C107/D0	R4
MRL	OR	C107/D7	
MRL	CM	C137/G6	C15R
MRL	IR	D131/B4	
MRL	MTC	D207/D1	R4
MRL	IR	D207/D8	
MRL	CM	D215/G6	C15R
MRL1	DTM	B111/E3	14
MRL1	CM	C605/B7	C18R
MRL1	CM	D705/B7	C18R
MS	MTC	B104/B2	R3
MS-	PC	B103/B2-E7	
MS-	PC	B104/F6-F9	
MS-	PC	C105/B2-E7	
MS-	PC	D205/B2,E7	
MSK	DTM	B103/H2	15
MSK	DTM	B104/G5	15
MSK	CM	C105/H2	C20R
MSK	CM	D205/H2	C20R
MST	OR	B512/B7	
MST	IR	D113/C2	
MST	IR	D131/F5	
MST1	OR	B511/B8	
MST1	OR	B513/A0	
MST1	AMRST	C149/A6	
MS1	MTC	B104/E1	R3
MT	DTM	B202/E0	14
MT	CM	C106/A3	
MTR	AMRST	C605/A9	
MTR	MTFC	C607/C6	
MTR	AMRST	D705/A9	
MTR	MTFC	D709/C6	
MTT	APTT	C310/F6	
MTT	MTC	C310/F9	R4
MT1	DTM	B202/E0	14
MT1	CM	C106/A3	C19R
MT12	CM	C310/D3	C19R
MT14	CM	C304/D4	C51R
MT14,19	DTM	B202/D5,D6	51
MT2	CM	C204/D5	119L
MT24	CM	C304/D8	F4
MT24,29	DTM	B202/D8,D9	S-4
MT4	DTM	B202/D2	48
MT4	CM	C304/D2	C48R
MT5	DTM	B208/F5	33
MT5	CM	C308/F7	C39R
MT6	DTM	B208/E5	32
MT6	CM	C308/F7	C40R

DESIG	CKT	LOC	EQPT LOC *
MT7	DTM	B412/D4	42
MT7	CM	C522/D4	C38L
MT7	CM	D614/D4	C38L
MT8	DTM	B405/H4	34
MT8	CM	C507/H4	C36L
MT8	CM	D607/H4	C36L
MT8A	DTM	B405/H4	36
MT8A	CM	C507/F5	C37L
MT8A	CM	D607/F5	C37L
MT8K	MTC	B405/F1	R35
MT8K	MTC	C507/E0	R35
MT8K	MTC	D607/E0	R35
MT9	DTM	B202/D5	48
MT9	CM	C306/H6	C44R
MT9	CM	D304/H6	C44R
MXT	DTM	B207/A3	10
MXT	DTM	B405/G8	10
MXT	CM	C109/A0	C9L
MXT	CM	C507/G8	C9L
MXT	CM	D115/A0	C9L
MXT	CM	D607/F8	C9L
MO-9	AMRST	C149/F4	
MO-9	CM	D808/D4-G4	REL R
M7	AMRST	C145/H9	
M7	OS	C208/H7	
M7	OS	D213/H7	
M7	AMRST	D218/G9	
N	MTC	D116/H4	R5
NA	MTC	C145/D0	R7
NA	MTC	D218/D0	R7
NANS	CM	D420/B9	P27
NAR1,2	CM	D420/A1,B1	P27
NA1	MTC	C145/D0	
NA1	MTC	D218/D0	
NB	MTC	C145/D1	R7
NB	MTC	D218/D1	R7
NB1	MTC	C145/D1	
NB1	MTC	D218/D1	
NC	MTC	C145/D2	R7
NC	MTC	D218/D2	R7
NCCN	CM	C119/B8	T42R
NCCN	CM	C129/D9	T42R
NCCN	CM	C131/E6	T42R
NCNC	CM	C119/B8	T42R
NCNC	CM	C128/C8	T42R
NCNC	CM	C129/A8	T42R
NCNC	CM	C130/D8	T42R
NCNC	CM	C131/B8	T42R
NCNC	CM	C132/C9	T42R
NCNC	CM	C133/D9	T42R
NCNC	CM	C134/C7	T42R
NCNC	CM	C706/B8,D8	T42R
NCNC	CM	C706/E6	T42R
NC1	MTC	C145/D2	
NC1	MTC	D218/D2	
ND	MTC	C145/D3	R7
ND	MTC	D218/D3	R7
NDI	CM	C310/B4	C23L
NDK	CM	C310/A6	C23L
ND1	MTC	C145/D3	
ND1	MTC	D218/D3	
NE	CM	D213/H4	T36R
NGB	CM	D409/H1	C29L
NGC	CM	D408/G4	C27L
NGK	CM	D411/E7	C31L
NGK1	CM	D411/F7	C31L
NGSA-H	CM	D422/A4-F4	P26
NGP	CM	C517/C8	C29L
NGSK	CM	D422/B0	P27
NGTA-H	CM	D421/A8-F8	P25
NH	CM	D805/F2	REL R
NOB	CM	C111/D5	T47R
NOB	OS	C211/F8	
NOC	CM	C312/E1	C26L
NOE	IR	D113/B1	
NR	CM	D418/G2	C31L
NS	MTC	D426/E1	R10

* FOR EXPLANATION OF EQPT LOC; REFER TO SHEET NOTE 1 ON SHEET A701.

APPARATUS INDEX

DWG SIZE C2 | ISSUE 5

BELL LABORATORIES | SFD-10-01 | A305

PRINTED IN U.S.A.

RELAYS

DESIG	CKT	LOC	EQPT LOC *
NSI	CM	C128/E3	C23L
NSI	CM	C204/B6	C23L
NSK1	CM	C212/E1	T49R
NSO	CM	E204/A6	C23L
NSO	CM	E704/G2	C23L
NSSO-5	CM	D407/B8-F8	T33R
NST	CM	D424/D9	PRE1,34
NST	MTC	D426/D7	R9
NT	CM	D805/D2	REL R
NTAN	IR	D108/F9	
NTAN	IR	D122/H8	
NTB	MTC	B422/C5	R40
NTB	MTC	C532/D4	R40
NTB	MTC	D624/C4	R40
NTC	MTC	B422/C2	R40
NTC	MTC	C532/G4	R40
NTC	MTC	D624/G4	R40
NTC	CM	D804/D6	REL R
NTC1	MTC	B422/C2	R40
NTC1	MTC	C532/G4	R40
NTC1	MTC	D624/G4	R40
NTH	MTC	B422/D1	R40
NTH	MTC	C532/C2	R40
NTH	MTC	D624/C3	R40
NTH	CM	D804/E6	REL R
NTR	MTC	D806/B7	R3
NTR	CM	D806/C2	REL R
NTT	CM	D806/C4	REL R
NT1,4	CM	D808/C2,E0	REL R
NT2,3,5	CM	D804/C6,E6	REL R
N1,2	CM	D213/B2,A3	T34R
N3,4	CM	D213/A3	T33R
OA	IR	D108/B9	
OA	IR	D122/A8	
OA	CM	D208/B5	T38R
OAT	DTM	B110/C3	11
OAT	CM	C106/C3	C15R
OAT	CM	D206/C4	C15R
OAT1	DTM	B111/G7	11
OAT1	CM	C137/F4	C15R
OAT1	CM	D215/F4	C15R
OB	IR	D108/C9	
OB	IR	D122/B8	
OB	CM	D208/C5	T39R
OBS	CM	C111/E5	T47R
OBS	OS	C211/E8	
OC	DTM	B104/G4	22
OCM	CM	D207/E3	T39R
OC1	DTM	B104/B3	22
OD	CM	C216/F4	C22L
ODA	ALL	C411/H7	
ODA	ALL	D509/H7	
ODD	ALL	C411/E7	
ODD	ALL	D509/E7	
OF	OGT	C213/E2	
OF	OS	C213/H6	
OF	OS	C215/B3	
OF	OS	C616/G3	
OF	OS	C626/F4	
OF	OS	D110/G3	
OF	OS	D124/E3	
OF	MG	D414/E5	
OFH	CM	D630/C3	C33L
OFK	CM	D414/F8	C32L
OF1	OS	C615/C6	
OGC	CM	C207/C6	C23L
OH	AMRST	D104/F1	
OK	AMRST	C156/C0	
OK	AMRST	C614/F6	
ON	Ok	B503/E5	
ON	OR	B507/E4	
ON	MTFC	C149/G6	
ON	OS	C206/E9	
ON	OS	C213/A8,E8	
ON	TRC	C607/C0	
ON	MTFC	C607/H6	
ON	IR	D114/F3	

DESIG	CKT	LOC	EQPT LOC *
ON	IR	D117/E8	
ON	TRC	D709/B0	
ON	MTFC	D709/H6	
ONX	DTM	B425/A9	10
ONX	CM	C108/G3	C4L
ONX	CM	D209/G1	C4L
ONX	CM	D210/H3	C4L
ON1	OR	B513/D4	
ON1	OS	C206/F9	
ON1	IR	D114/F0	
ON1	IR	D130/C0	
OPR	CM	C130/H7	T43R
OPS0-3	CM	C119/B8	T43R
OPS0,1	CM	C130/C6,G6	T43R
OR	CM	C110/C5	T51L
ORK1	CM	C209/B0	T32R
ORK2	CM	C209/B9	T31R
OS	TTL	C824/G3	
OSA	TTL	C824/G3	
OSB	TTL	C824/G3	
OSC	CM	C207/D6	C22L
OSE	CM	C207/E7	C19L
OSE1	CM	C206/D7	C19L
OSGA0-9	OSC	C205/A7	
OSGA10,11	OSC	C205/A7	
OSGB0-9	OSC	C205/G7	
OSGB10,11	OSC	C205/G7	
OSG0-11	MTC	C204/B2	R12
OSG0-4	CM	C119/B4	C17L
OSG0-4	CM	C128/F0	C17L
OSG0-4	CM	C204/B6	C17L
OSG10,11	CM	C119/B4	C23L
OSG10,11	CM	C128/F0	C23L
OSG10,11	CM	C204/B6	C23L
OSG5-9	CM	C119/B4	C16L
OSG5-9	CM	C128/F0	C16L
OSG5-9	CM	C204/B6	C16L
OSK	MTC	C204/G2	R12
OSK	CM	C204/H5	C19L
OSKA	CM	C204/H5	C18L
OST	CM	C214/B3	C21L
OST1,2	CM	C214/E8	C22L
OS0-4	CM	C206/A1-C1	C19L
OT	DTM	B208/C2	33
OT	DTM	B209/F4	33
OT	CM	C308/B7	C41R
OT	CM	C309/F4	C41R
OTL1	MTC	C114/G2	R10
OTL2	MTC	B107/H1	R10
OTS	DTM	B209/G4	32
OTS	CM	C309/G4	C41R
OTT	CM	C310/C3	C23L
OV	CM	D630/B6	C32L
OV	CM	D806/D7	C32L
OVC	CM	C517/B5	C29L
OVC	CM	D419/A1	C29L
OVC	CM	D617/D6	C29L
OVL	OR	B513/D3	
P	OS	C623/C0	
PA	DTM	B403/C2	43
PA	CM	C505/C2	C39L
PA	CM	D605/C2	C39L
PA0-2	PRTC	B609/G1	
PB	DTM	B403/E2	43
PB	OGT	C313/E9	
PB	CM	C505/E2	C39L
PB	CM	D605/E2	C39L
PBC	OR	B508/G4	
PBN	CM	D414/G8	C32L
PBXA	CM	C517/G2	C27R
PBXA	CM	D418/A1	C27R
PBX1,2	CM	D418/F4	C28L
PBY	CM	C119/B8	T43R
PBY	CM	C132/C3	T43R
PB0-2	PRTC	B609/H1	
PC	DTM	B403/E2	43
PC	PRT	B605/G2	

DESIG	CKT	LOC	EQPT LOC *
PC	CM	C505/E2	C39L
PC	CM	D605/E2	C39L
PCA0-2	PRTC	B609/G3	
PCK	PRT	B608/F6	
PCL1,2	CM	C108/C2	C24L
PCL1,2	CM	D210/C2	C24L
PCN	CM	C119/B8	T43R
PCN	CM	C133/D8	T43R
PC0-14	AMRST	D117/E2,F2	
PC0,1	PRTC	B605/B1,B6	
PC00-27	CM	C119/B8	T12*R
PC1-3	MTC	B608/B2-D2	R51
PC28-39	CM	C119/B8	T7*R
PD	OR	B513/F7	
PD	CM	C112/B4	T40R
PE	DTM	B403/F6	S-6
PE	AMRST	C149/B1	
PE	CM	C505/F6	C12R
PE	CM	D605/F6	C12R
PEA	AMRST	C149/B1	
PG	OS	C613/A5	
PG	OS	C623/B3	
PG1	OS	C613/B3	
PK	PRTC	B609/H3	
PK	CM	C112/B4	T40R
PL	AMRST	C614/B7	
PLL	MTC	C410/G1	RR4
PLL	MTC	D508/G1	RR4
PMO	CM	D414/G8	C32L
PMO	CM	D419/A1	C32L
PN	CM	D411/A4	T39R
PNC	CM	C119/B8	T43R
PNC	CM	C133/G8	T43R
PNR	DTM	B403/A2	43
PNR	CM	C505/A2	C39L
PNR	CM	D605/A2	C39L
PPR-	MTFC	B611/C3	
PPX	CM	C119/B8	T43R
PPX	CM	C133/B8	T43R
PR	DTM	B408/F8	40
PR	CM	C510/F8	C40L
PR	CM	D610/F8	C40L
PRA-	PRTC	B604/E0-G0	
PRL	MTC	B608/A3	R50
PRL	PRT	B608/A6	
PRL	OR	B609/A4	
PRL	CM	C410/B3,D3	C7L
PRL	CM	D508/B3,D3	C7L
PRLL	CM	C410/A2,E2	C7L
PRLL	CM	D508/A3,E3	C7L
PRLLA	CM	C410/A2,F2	C7L
PRLLA	CM	D508/A3,F3	C7L
PRS-	PRTC	B604/D1-G1	
PS	PRT	B605/G2	
PS	CM	C112/C4	T40R
PST	OR	B512/A2	
PST	MTC	B608/C4	R50
PS0,1	PRTC	B605/A3,B8	
PTK	CM	D411/A2	C29L
PTK	CM	D419/E4	C29L
PTN	CM	D411/C4	T39R
PTP	MTFC	B611/D3	
PTR	PRTC	B609/E1	
PTR1	MTC	B608/D3	R40
PTR1	PRTC	B609/D1	
PU	CM	C532/D2	C25R
PU	CM	C535/F5	C25R
PU	MTC	D624/D2	R42
PU	CM	D627/F5	C25R
PU	IT	D706/C4	
PUL	CM	D419/C5	C30L
PU1	CM	C532/E1	C30L
PU1	CM	D419/F2	C30L
PU1	MTC	D624/E1	R42
PW	PRT	B607/A1	
PW1	PRT	B607/B1	
P0-9	DTM	B402/A0-F0	43

DESIG	CKT	LOC	EQPT LOC *
P0-9	CM	C504/A0-F0	C39L
PC-9	CM	D604/A0-F0	C39L
P0A-2A	DTM	B402/A1,B1	S-6
P0A-2A	CM	C504/A1,B1	C12R
P0A-2A	CM	D604/A1,B1	C12R
P1-5	OR	B507/B3-F3	
P1-5	OS	C623/A9-F9	
P1-5	IR	D128/A0-F0	
P2A	OR	B507/C3	
P2A	IR	D128/C4	
P3A-5A	MTC	C516/G4,H4	R35
P5A-9A	DTM	B402/D1-F1	S-6
P5A-9A	CM	C504/D1-F1	C12R
P5A-9A	CM	D604/D1-F1	C12R
R	TL	B410/A0	
R	TL	C520/A0	
R	IT	D127/D2	
R	TL	D612/A0	
R-	CM	C119/A3,G4	RR--
R-	CM	C120/A7	RR--
R-	CM	C128/C7-F7	RR--
R-	CM	C129/C1-H1	RR--
R-	CM	C130/B6-G6	RR--
R-	CM	C131/B1-E6	RR--
R-	CM	C132/B9-G9,G3	RR--
R-	CM	C133/B1,F8,H6	RR--
R-	CM	C134/D1,E1	RR--
R-	OSGR	C207/F4	
R-	OSGR	C615/G5	
R-	OSGR	C624/G6	
R-	CM	C706/B2-F6	RR--
RA	MTC	B206/F5	R36
RA	TL	B410/A0	
RA	OR	B507/F4	
RA	ORMC/IRMC	C104/B2-E5	
RA	MTC	C516/D7	R36
RA	TL	C520/A0	
RA	IR	D113/B0	
RA	IR	D128/A5	
RA	ORMC/IRMC	D204/B2,E2	
RA	TL	D612/A0	
RAP1-5	MTC	C516/D4-G4	R36
RAP1,2	MTC	B206/D3	R36
RAV	MTC	B206/B3	R35
RAV	MTC	C516/A3	R35
RAV1	DTM	B206/B6	21
RAV1	CM	C705/F1,H1	C36R
RAV1,2	CM	C517/B8	C36R
RA0-8	MTFC	C607/F6	
RA0-8	MTFC	D709/F6	
RA1	MTC	B206/B3	R36
RA1	OR	B507/D5	
RA1	OR	B512/B8	
RA1	IR	D128/B9	
RA1-3	MTC	C516/B3,C3	R36
RA1-6	CM	C119/C1	C37R
RA1-6	CM	C308/C3-F3	C37R
RA1'	MTC	B206/C2	R36
RA1',2'	MTC	C516/B3	R36
RA3'-5'	MTC	C516/C3,D3	R35
RA4,5	MTC	C516/C3,D3	R35
RB	LLDC	B112/B2	
RB	TL	B410/A0	
RB	ORMC/IRMC	C104/B2-E6	
RB	TL	C520/B0	
RB	IR.	D114/F3	
RB	ORMC/IRMC	D204/B3,E2	
RB	TL	D612/A0	
RB-	OI	D706/B9	
RB0	IRL	D106/E3	
RB0	IRL	D116/B0	
RBT	CM	C517/D3	C36R
RBT	CM	D419/D7	C36R
RBT1	MTC	C516/E8	R4
RB1	IR	D114/F3	
RB1-3	AMRST	D116/C3,D5	
RB1-6	G6	B513/A5-B6	

DESIG	CKT	LOC	EQPT LOC *
RB1,2	GB	B112/F8,F7	
RB3	IRL	D107/B2	
RC	LLDC	B112/C2	
RC	ORMC/IRMC	C104/B2-E6	
RC	MTC	C313/C0	R39
RC	ORMC/IRMC	D204/B3,E2	
RC	MTC	D629/B0	R39
RC	IT	D629/C8	
RC	IT	D706/D7	
RC	IT	D805/B0	
RCCK	PRT	B611/E3	
RCK	MTC	D415/B0	R9
RCK1	CM	D706/D9	C33L
RCK1-3	CM	D629/C5-E5	C33L
RCK1,2	CM	D805/B4,C5	C33L
RCL	CM	D415/F7	C30L
RCN1-15	CM	D414/D8	C50L
RCTA	DTM	B425/C9	24
RCTA	CM	C535/A7	C26R
RCTB	DTM	B425/B9	24
RCTB	CM	C535/B7	C26R
RCT1-14	CM	D415/A7-E7	C34L
RCT15	CM	D415/E7	C35L
RCY	DTM	B206/C7	21
RCY	MTC	B206/E1	R6
RCY	MTC	C516/A3	R6
RCY	CM	C517/A3	L37R
RCY1	DTM	B206/B6	21
RCY1	CM	C517/A3	C37R
RCY2-4	CM	D419/F3,G3,G6	C31L
RCY5	CM	D419/G3	C29L
RD	ORMC/IRMC	C104/B2-E5	
RD	ORMC/IRMC	D204/B2,E2	
RDL	CM	C517/C3	C17R
RE	ORMC/IRMC	C104/B2-E6	
RE	ORMC/IRMC	D204/B2,E3	
REC	MTC	B502/E1	R3
REC	MTL	C605/H4	R3
REC	MTC	D705/H4	R3
RF	DTM	B206/A8	21
RF	TL	B410/F0	
RF	CM	C517/G4	C38R
RF	TL	C520/F0	
RF	CM	D419/G0	C38R
RF	TL	D612/F0	
RFA	DTM	B206/B8	21
RFA	CM	C517/H4	C38R
RFA	CM	D419/H0	C38R
RGT	CM	C133/F2	T38R
RGT	CM	D211/F5	T38R
RGTA	CM	C133/H0	C29L
RGTA	CM	D411/F2	C29L
RI	CM	D419/C1	C31L
RIB	CM	D419/E8	C32L
RIR1	AMRST	D116/F9	
RK	DTM	B410/D3	23
RK	CM	C520/D3	C31R
RK	CM	D612/D3	C31R
RK1-3	DTM	B428/A1-F3	31
RK1-3	CM	C114/G9,H4	C32R
RL	OR	B512/D7	
RL	OR	C107/E7	
RL	IT	D706/D6	
RLK	PRT	B608/A6	
RLK	IR	D114/F0	
RLK	IR	D130/B0	
RM	MTFC	C607/E6	
RM	MISC	D709/E0	
RM	MTFC	D709/E6	
RMA	MTFC	C607/E6	
RMA	MTFC	D709/E6	
RM1	MTFC	C607/G6	
RM1	MTFC	D709/G6	
RM1A	MTFC	C607/G6	
RM1A	MTFC	D709/G6	
RN	AMRST	C155/E6	
RN	CM	C214/F1	C25L

* FOR EXPLANATION OF EQPT LOC; REFER TO SHEET NOTE 1 ON SHEET A701.

ISSUE	DWG SIZE	APPARATUS INDEX
5	C2	
A306	SFD-10-01	BELL LABORATORIES

PRINTED IN U.S.A.

RELAYS

DESIG	CKT	LOC	EQPT LOC *
RNG	CM	D418/A2	C30L
RNK1,2	CM	C214/F2,F7	C25L
RNT	CM	C214/A6	C25L
RNTO-2	OS	C216/E6-H6	
RNT1,2	CM	C214/G1,F2	C25L
RNT20	CM	C216/C6	C13L
RNO,1,2,4,7	CM	C216/A7-D7	C25L
RNO,1,2,4,7	OS	C216/C9	
RN2K	CM	C216/H4	C13L
RN2T	CM	C216/G4	C13L
RO	OS	C207/F3	
RO	OS	C624/F8	
RO	IR	D113/D2	
RO	IR	D130/F0	
RO	CM	D208/E5	T51L
RO	CM	D630/D3	T51L
ROA	CM	C120/F3	C33R
ROA	CM	C134/D8	C33R
ROA	CM	D306/G8	C33R
ROA	CM	D630/C3	C33R
ROS	MTFC	C607/E5	
ROS	MTFC	D709/D5	
ROT	MTC	C614/D1	R43
RP	CM	B503/G6	T51L
RP	CM	C113/C4	T51L
RP	OS	C212/H9	
RPE1	AMRST	C148/D3	
RPK	CM	C212/H6	T47R
RPO	IRL	D106/E2	
RPO	IRL	D116/A0	
RPS1	AMRST	C148/D2	
RP3	IRL	D107/B1	
RQ	DTM	B408/D6	40
RQ	CM	C510/D6	C40L
RQ	CM	D610/D6	C40L
RR	CM	C119/B8	T40R
RR	CM	C130/E8	T40R
RR	CM	C131/C8	T40R
RR	CM	C706/C8,D8	T40R
RRK	CM	C112/F4	T40R
RRO,1,2,4,7	OS	C612/A0-C0	
RRO,1,2,4,7	OS	C622/A0-C0	
RS	ORMC/IRMC	C104/C2,G2	
RS	ORMC/IRMC	C142/B0	
RS	IRMC	D131/D6	
RS	ORMC/IRMC	D134/B0	
RS	ORMC/IRMC	D204/C2-G5	
RSC	CM	C214/B2	C22L
RSH	MTC	C313/D0	R39
RSH	MTC	D629/C0	R39
RSK	CM	D628/G7	C33L
RSO	MTC	D628/A2	R37
RSO-9	CM	D628/A3-F3	C35L
RS1-9	MTC	D628/B2-F2	R38
RT	GB	B513/C6	
RT	IT	D706/C4	
RTC	AMRST	C145/H3	
RTC	AMRST	D218/H4	
RTC1,2	AMRST	C156/D3,C3	
RTN	CM	C216/F4	C13L
RTNA	CM	C216/C6	C13L
RTOS	MTFC	C607/F6	
RTOS	MTFC	D709/F6	
RUN	CM	C216/E4	C13L
RUNA	CM	C216/D6	C13L
RV	CM	C705/D0	C29L
RV	IR	D114/C2	
RV	IR	D130/C9	
RV1,2	CM	C403/A8,G8	C29L
RV1,2	CM	C705/A8,A0	C29L
RX	TL	B410/B0	
RX	TL	C520/B0	
RX	TL	D612/B0	
RYC	DTM	B205/F1	21
RYC	CM	C517/F2	C37R
RYT	DTM	B111/C3	12
RYT	CM	C137/C3	C16R
RYT	CM	D215/C3	C16R
RYT1	DTM	B111/B3	12
RYT1	CM	C137/B4	C16R
RYT1	CM	D215/B4	C16R
RO	OS	C615/F6	
RO-3	DTM	B105/D5-G5	REL R
RO-8	MTFC	C607/F6	
RO-8	MTFC	D709/F6	
S	OGT	C616/B5	
S	IT	C617/B5	
S	OGT	C626/B5	
S	IT	C627/C4	
S	T TERM	C824/B6	
S	OGT	D110/B5	
S	IT	D111/B4	
S	OGT	D124/A4	
S	IT	D125/B5	
S	IR	D127/B4	
S	IT	D706/F4	
S-	OSC	C207/A1	
SA	TL	B410/G0	
SA	TL	C520/G0	
SA	TL	D612/G0	
SA-	NG	D425/G6	
SAC	CM	D418/E6	T35R
SAC1	CM	D418/E8	C28L
SAE	CM	D424/H4	C27L
SAK	CM	D413/A7	C28L
SA0-8	MTFC	C607/F6	
SA0-8	MTFC	D709/F6	
SA0-9	CM	D424/A1-G1	T37R
SA1-,2-	OSC	C207/B3	
SB	TL	B410/H0	
SB	OS	C206/G9	
SB	MTC	C516/B7	R5
SB	TL	C520/H0	
SB	TL	D612/G0	
SB1-,2-	OSC	C207/B3	
SC	OS	C211/F8	
SC-	NG	D425/A3	
SCBA0,1	CM	C204/B9	C17L
SCBA2,3	CM	C204/B9	C16L
SCBB0,1	CM	C204/C9	C17L
SCBB2,3	CM	C204/C9	C16L
SCC	CM	C111/A6	T47R
SCCK	CM	C113/G7	T51L
SCK	CM	B511/E9	T40R
SCK	CM	C112/D4	T40R
SCK	NG	D425/B7	
SCN	CM	B511/E9	T40R
SCN	CM	C112/E4	T40R
SCR	CM	D425/B0	C28L
SCT	CM	C148/E7	C17R
SC1-,2-	OSC	C207/B2	
SD	MTC	B607/A8	R51
SD	OR	B607/D7	
SD	T TERM	C824/B9	
SDT	DTM	B111/D8	12
SDT	CM	C136/G3	C16R
SDT	CM	D214/G3	C16R
SEF	TL	B410/G0	
SEF	TL	C520/G0	
SEF	TL	D612/G0	
SEL	TL	B410/C0	
SEL	TL	C520/C0	
SEL	TL	D612/C0	
SER	TL	B410/A0	
SER	TL	C520/A0	
SER	TL	D612/A0	
SF	CM	C136/B3	C15R
SF	CM	D214/B3	C15R
SFR	CM	D804/F6	REL R
SFT	DTM	B111/B5	12
SFT	CM	C136/B3	C16R
SFT	CM	D214/B3	C16R
SHK	CM	C206/F3	C21L
SHKA	CM	C206/E6	C22L
SIA	CM	C204/D5	C18L
SIB	CM	C204/E5	C18L
SK	CM	C313/D5	C20L
SKA	CM	C205/D4	C18L
SKB	CM	C205/F4	C18L
SL	DTM	B423/E8	26
SL	CM	C533/D9	C29R
SL	MTC	C533/G6	R42
SL	CM	D625/D9	C29R
SL	MTC	D625/G6	R42
SLA	DTM	B423/F9	27
SLA	CM	C533/E3	C30R
SLA	CM	D625/E3	C30R
SLCK	CM	D425/A0	C28L
SLCK1	CM	D418/F8	C28L
SLK	CM	C206/G3	C21L
SLK	MTC	D426/F2	R10
SLKT	MTC	D426/G8	R10
SLK1,2	CM	C207/F7	C22L
SLRK	DTM	B421/F6	27
SLRK	CM	C531/B6	C30R
SLRK	CM	D623/B6	C30R
SL0-9	CM	D424/A4-G4	T35R
SL0-9	CM	D426/B3	T35R
SNG1	CM	D408/F4	T39R
SNG2	CM	D408/F4	C31L
SNK	DTM	B206/D7	23
SNK	CM	C307/G5	C37R
SOG1,2	CM	C108/B2	C34R
SOG1,2	CM	D210/B2	C34R
SON	CM	C204/C5	C22L
SP	DTM	B502/G8	23
SP	CM	C605/D4	C35R
SP	OS	C615/A6	
SP	OS	C625/C8	
SP	SR	D112/F1	
SP	CM	D705/D3	C35R
SPC	CM	D804/F4	REL R
SPE	AMRST	C614/C6	
SPE1	AMRST	C614/C6	
SPH	CM	D805/E2	REL R
SPL	CM	D208/A5	REL R
SPL	PC	D804/B0	
SPL	CM	D804/C3	REL R
SPL1	CM	D208/A5	REL R
SPL1	CM	D804/C3	REL R
SPR-	AMRST	D116/F2	
SPO-2	MTFC	D804/D2,E3	
SP1	CM	C605/D4	C34R
SP1	CM	D705/D3	C34R
SP2	MTFC	B422/E8	
SQA	DTM	B405/G7	34
SQA	CM	C507/H6	C36L
SQA	CM	D607/H6	C36L
SQ0,1	DTM	B405/F7,G7	34
SQ0,1	CM	C507/F6,E6	C36L
SQ0,1	CM	D607/E6,F6	C36L
SR	OR	B503/C8	
SR	MTC	B608/B2	R50
SR	IR	D114/G0	
SRA	MTRC	C108/A7	
SRA	MTRC	C142/A4	
SRA	MTRC	D134/A4	
SRA	MTRC	D210/A7	
SRB	MTRC	C108/A7	
SRB	MTRC	C142/B4	
SRB	MTRC	D134/B4	
SRB	MTRC	D210/A7	
SRK	CM	D629/C4	C33L
SSA	MTC	C204/F2	R12
SSA	CM	C204/F5	C19L
SSAA	MTC	C204/F2	R12
SSB	MTC	C204/G2	R12
SSB	CM	C204/G5	C19L
SSBA	MTC	C204/G2	R12
SST1	MTC	C207/F1	R12
SSU0,1,2,4,7	CM	C113/B4	T4+R
SS0-9	OSL	C213/A1-D1	
ST	TRC	C607/B0	
ST	OS	C610/E9	
ST	TRC	D709/B0	
ST-	OI	D706/A8	
STF	DTM	B408/E8	40
STF	CM	C510/E8	C40L
STF	CM	D610/E8	C40L
STP	DTM	B415/D9	42
STP	MTC	B415/G0	R35
STP	CM	C525/C9	C38L
STP	MTC	C525/G0	R35
STP	CM	D617/C9	C38L
STP	MTC	D617/G0	R35
STPA	CM	C410/A3,D3	C7L
STPA	MTC	C410/G4	R35
STPA	CM	C525/E2	C7L
STPA	CM	D508/A3,D3	C7L
STPA	MTC	D508/G4	RR4
STPA	CM	D617/D7	C7L
STP1-9	DTM	B415/B8,F2,E9	42
STP1-3	CM	C525/A8,F2,D9	C38L
STP1-3	CM	D617/A8,F2,D9	C38L
STP2A	DTM	B415/F2	S-5
STP2A	CM	C525/F2	C11R
STP2A	CM	D617/F2	C11R
STR	OR	B508/E4	
STRA	OR	B507/D6	
STR1,2	TRC	C607/A0	
STR1,2	TRC	D709/A0	
STS	OR	B509/A7	
STS	OS	C310/A8	
STS	OS	C611/F8	
STS	OS	C621/F8	
STS	IR	D113/A8	
STS1	OS	C310/A8	
STS1	OS	C611/F9	
STS1	IR	D113/A9	
STT	AMRST	D116/G7	
STX	DTM	B207/B0	10
STX	CM	C109/B0	C9L
STX	CM	D115/B0	C9L
STX	CM	D207/E3	C9L
ST7	OS	C620/E9	
SW	PRT	B607/B1	
SW1	PRT	B607/C1	
S0-8	MTFC	C607/F6	
S0-8	MTFC	D709/F6	
S00-179	CM	C126/A4	T43L
S1	OR	B418/A9	
S1	OR	B419/B9	
S1	OGT	C528/A8	
S1	OGT	C529/A9	
S1	OGT	D620/B9	
S1	OGT	D621/B9	
S2	IAO	C213/E4	
T	AMB	B112/H7	
T	IT	D629/E9	
T	IT	D706/C6	
TA	CM	C314/D2	C44R
TA	OI	D706/A9	
TAL	DTM	B110/B4	14
TAL	CM	C106/B4	C18R
TAL	CM	D206/B4	C18R
TAM1,2	CM	C214/A0	T3+R
TB	MTC	B206/A3	R5
TB	MTC	C516/C7	R5
TB	OI	D706/A9	
TBA-	NG	D425/B6	
TBC	CM	C308/H7	C44R
TBH	CM	D419/D8	C33L
TB1	CM	D419/F1	C31L
TB1B	CM	D419/E8	REL R
TBK	DTM	B209/H5	44
TBK	CM	C309/G5	C44R
TBL	OR	B507/E1	
TBSK	MTC	D410/F0	
TBSO-3	CM	D410/G3	C10R
TBSO-3	NG	D410/G8	
TBT	DTM	B204/G3	45
TBT	CM	C314/B2	C44R
TBTA	DTM	B111/E8	45
TBTA	CM	C314/C2	C45R
TBTB	CM	C314/C2	C45R
TBW	CM	D410/D2	C31L
TB0	TL	B209/G8	
TB0-5	CM	C119/C4	C43R
TB0-5	CM	C308/D0	C43R
TB0-5	TL	C309/F7	
TB0-9	TL	C309/F7	
TB00-99	NG	D410/E8,F8	
TB1	AMRST	C614/E5	
TB6-9	CM	C119/C4	REL R
TB6-9	CM	C308/D0	REL R
TC	LL	B104/D6	
TC	PC	C108/H7	
TC	PC	C142/D1	
TC	MTC	C313/E0	R39
TC	CM	C313/F5	T42R
TC	PC	D134/D1	
TC	PC	D210/H7	
TC	MTC	D629/F0	R39
TCA	MTRC	C108/A7	
TCA	MTRC	C142/A4,C4	
TCA	MTRC	D134/A4	
TCA	MTRC	D210/A7	
TCA1	MTRC	C142/B6	
TCA1	MTRC	D134/B6	
TCB	MTRC	C108/A7	
TCB	MTRC	C142/C4	
TCB	MTRC	D134/B4	
TCB	MTRC	D210/A7	
TCB1	MTRC	C142/B6	
TCB1	MTRC	D134/B6	
TCC	CM	C313/E5	C20L
TCCA	CM	D209/E3	C43L
TCCK	CM	C120/D3	T51L
TCCK	CM	D209/D8	T51L
TCCK	CM	D630/D3	T51L
TCCN	CM	C119/B8	T42R
TCH	CM	D306/H4	
TCHK	DTM	B415/H2	23
TCHK	CM	C525/H2	C31R
TCHK	CM	D617/H2	C31L
TCHO-9	DTM	B412/A8-H8	16
TCHO-9	CM	C522/A8-H8	C21R
TCHO-9	CM	D614/A8-H8	C21R
TCK	CM	D629/F5	C33L
TCK	CM	D706/D9	C33L
TCL-	AMRST	D117/G2	
TCNC	CM	C119/B8	T42R
TCNC	CM	C128/F8	T42R
TC1	MTC	B104/D1	R3
TC1	LL	B104/D6	
TC1	PC	C108/H7	
TC1	PC	C142/E1	
TC1	PC	D134/E1	
TC1	PC	D210/H7	
TC1,2	IR	D131/B3,D3	
TC2	IR	D114/E0	
TC2	IR	D130/A0	
TE	CM	C308/B7	C39R
TE	CM	C309/F3	C39R
TEA	CM	D306/H7	C33R
TEA	CM	D407/E0	C33R
TEN	IR	D113/C2	
TER1,2	CM	C108/D1	C34R
TER1,2	CM	D210/D1	C34R
TFK1-3	CM	C306/C3-E3	C44R
TFK1-3	CM	D304/C3-E3	C44R
TFK1,2	DTM	B204/C3,E3	44
TFT	IR	D109/A9	
TFT	IR	D123/A9	
TF0,1,2,4,7	CM	C306/F6	C43R

* FOR EXPLANATION OF EQPT LOC; REFER TO SHEET NOTE 1 ON SHEET 4701.

APPARATUS INDEX

DWG SIZE C2 | ISSUE 5

BELL LABORATORIES | SFD-10-01 | A307

PRINTED IN U.S.A.

RELAYS

DESIG	CKT	LOC	EQPT LOC *
TF0,1,2,4,7	IR	D109/A7,B7	
TF0,1,2,4,7	IR	D123/A7-F7	
TF0,1,2,4,7	CM	D211/D1-F1	C43R
TF0,1,2,4,7	CM	D304/E6	C43R
TG	OS	C213/H7	
TG	OS	C215/B3	
TG	CM	C215/C8	C23L
TG	OS	C616/G3	
TG	OS	C626/F4	
TG	OS	D110/G3	
TG	OS	D124/E4	
TGCK	DTM	B423/E8	26
TGCK	CM	C533/D8	C29R
TGCK	CM	D625/D8	C29R
TGP	CM	C119/C4	C42R
TGP	CM	C308/B0	C42R
TGS	CM	C119/C4	C42R
TGS	CM	C308/A0	C42R
TGS1,2	CM	C209/E5	T44R,T47R
TGT	CM	C215/B8	C23L
TGT	CM	C605/D6	C23L
TGT	OS	C624/B4	
TG0-9	CM	C119/C4	C42R
TG0-9	CM	C308/A1-C1	C42R
TG1	OS	C215/C4	
TG1	OS	C615/B6	
TG1	OS	C624/C8	
TH0,1,2,4,7	CM	C208/G3	T34R
TH0,1,2,4,7	CM	D213/G3	T34R
TIN	CM	D306/B3	C26L
TK	DTM	B415/G2	23
TK	CM	C525/G2	C31R
TK	CM	D617/F2	C31R
TKS	MTC	B202/H5	R35
TKS	MTC	C304/H2	R35
TLC	DTM	B204/E3	21
TLC1,2	CM	C306/D2,E2	C32R
TLC1,2	CM	D209/F3	C32R
TLC1,2	CM	D304/D2	C32R
TLH	MTC	B423/H5	L45
TLH	MTC	C533/G8	L45
TLH	MTC	D625/G8	L45
TM	LL	B106/B7	
TM	DTM	B110/B2	15
TM	MTFC	B110/E0	
TM	OGT	C213/F1	
TM	LL	B306/A4	
TM	OR	B513/H4	
TM	MTFC	B608/E5	
TM	PRT	B608/E6	
TM	PRTC	B611/D0	
TM	CM	C106/B2	C20R
TM	MTFC	C106/E0	
TM	PC	C108/E8	
TM	PC	C142/F0	
TM	LL	C408/A4	
TM	OS	C613/F8	
TM	OS	C623/G3	
TM	IR	D114/E2	
TM	IR	D130/H9	
TM	PC	D131/C5	
TM	PC	D134/F2	
TM	CM	D206/B2	C20R
TM	MTFC	D206/E0	
TM	PC	D210/E9	
TMA	OR	B513/D0	
TMA	MTRC	C142/H6	
TMA	IR	D130/D0	
TMA	MTRC	D134/H6	
TMB	CR	B513/E0	
TMB	MTRC	C142/H6	
TMB	IR	D130/E0	
TMB	MTRC	D134/H6	
TMC	OR	B513/B3	
TMS	DTM	B111/C1	12
TMS	CM	C137/B1	C16R
TMS	T TERM	C824/C9	

DESIG	CKT	LOC	EQPT LOC *
TMS	CM	D215/B1	C16R
TM1	LL	B106/B7	
TM1	LL	B306/A5	
TM1	OR	B507/D8	
TM1	OR	B513/C0	
TM1	PRTC	B611/C0	
TM1	PC	C108/E8	
TM1	PC	C142/F2	
TM1	LL	C408/A5	
TM1	IR	D114/G0	
TM1	PC	D134/F0	
TM1	PC	D210/E9	
TM1,2	TT	C824/G8,H8	
TN	CM	D411/B4	T39R
TNA	CM	D420/E9	P26
TNR	CM	C517/A3	C29L
TOA	JLK	B513/C9	
TOC	MTC	C311/C1	
TOC	MTC	C528/H6	
TOC	MTC	C529/H6	
TOC	MTC	D307/C1	
TOC	MTC	D620/H6	
TOC	MTC	D621/H7	
TOG1,2	CM	C108/D2	C34R
TOG1,2	CM	D210/D2	C34R
TOS	CM	C119/B8	T43R
TOS	CM	C134/E8	T43R
TP	OR	B503/A5	
TP	CM	B503/H6	T51L
TP	CM	C113/D4	T51L
TP	OS	C212/H9	
TPA	OR	B503/F5	
TPB	OR	B503/E9	
TPB	OR	B512/B6	
TPC	OR	B503/E6	
TPD	OR	B503/A5	
TPK	CM	C313/B5	T43R
TPS	CM	C212/H6	T41R
TPT	OR	B503/D7	
TPYK	CM	C313/C5	C20L
TP00-39	IRL	D104/C2-7	
TP01	IRL	D127/E3	
TP1,2	OR	B503/C5,D6	
TR	LL	B106/D6	
TR	PCMB	B204/E9	
TR	PCMB	B303/A7,E7	
TR	PRT	B608/C6	
TR	PCMB	C306/D9	
TR	PCMB	C405/A6,E6	
TR	T TERM	C824/C9	
TR	PCMB	D304/D9	
TR	PCMB	D409/A6,E6	
TR	PCMB	D505/A6,E6	
TR-	PCMB	B204/D9	
TR-	PCMB	B303/A5,E5	
TR-	PCMB	C306/C9	
TR-	PCMB	C405/A4,E4	
TR-	PCMB	D304/C9	
TR-	PCMB	D409/A6,E6	
TR-	PCMB	D505/A4,E4	
TRA	DTM	B110/C4	14
TRA	TL	B421/B6	
TRA	PRT	B611/F9	
TRA	CM	C106/C4	C18R
TRA	CM	D206/C4	C18R
TRB	DTM	B502/H7	14
TRB	PRT	B611/B2	
TRBA	PRT	B611/B1	
TRB1	PRT	B611/G0	
TRB1,2	CM	C607/D9	C18R
TRB1,2	CM	D709/D9	C18R
TRB2	CM	C607/B9	
TRB2	CM	D709/B9	
TRC	PC	C106/H7	
TRC	AMRST	C155/D6	
TRC	MTFC	C607/A4	
TRC	TRC	C607/C0	

DESIG	CKT	LOC	EQPT LOC *
TRC	PC	D206/H6	
TRC	MTFC	D709/A4	
TRC	TRC	D709/C0	
TRC1,2	MTFC	C607/B5	
TRC1,2	MTFC	D709/B5	
TRL	MTC	B106/C0	R4
TRL	LL	B106/C5	
TRL	DTM	B502/A8	14
TRL	PRT	B611/G0	
TRL	MTC	C107/B0	R4
TRL	PC	C107/B6	
TRL	CM	C605/D8	C18R
TRL	OS	C615/D6	
TRL	OS	C624/D8	
TRL	OS	C625/B9	
TRL	IR	D131/C4	
TRL	MTC	D207/B1	R4
TRL	PC	D207/B6	
TRL	IR	D207/C7	
TRL	CM	D705/D8	C18R
TRLA	DTM	B502/B8	14
TRR	DTM	B502/E5	14
TRR	CM	C605/D5	C18R
TRR	CM	D705/C6	C18R
TRR1,2	AMRST	C156/A0,B0	
TRS	DTM	B106/B2	13
TRS	LL	B106/B5	
TRS	PRTC	B609/B8	
TRS	PRT	B611/A1	
TRS	CM	C108/F3	C19R
TRS	PC	C108/G9	
TRS	CM	D210/F3	C19R
TRS	PC	D210/G9	
TRSA	CM	C605/A4	C19R
TRSA	CM	D705/A4	C19R
TRST	DTM	B502/F8	14
TRST	PRT	B611/F0	
TRST	CM	C605/A7	C19R
TRST	CM	D705/A7	C19R
TRS1	PRTC	B611/D0	
TRT	DTM	B111/D4	11
TRT	CM	C136/C8	C15R
TRT	CM	D214/C7	C15R
TRTR	DTM	B111/G3	11
TRTR	PRT	B611/E9	
TRTR	CM	C136/B9	C15R
TRTR	CM	D214/B9	C15R
TR1	LL	B106/E6	
TR1	DTM	B502/G8	14
TR1	CM	C605/D5	C18R
TR1	CM	D705/D4	C18R
TR2	PRTC	B609/E8	
TR2	PRT	B611/A2	
TR2	CM	C108/F5	C35R
TR2	CM	D210/F5	C35R
TR2A	DTM	B106/F3	22
TR2B	DTM	B106/F3	22
TR2B	CM	C108/C5	C35R
TR2B	CM	D210/C5	C35R
TR2C	CM	C108/C5	C27R
TR2C	CM	D210/C5	C27R
TS	TT	C824/H8	
TSE1	CM	C308/G7	C40R
TSE1,2	DTM	B208/F5,G5	33
TSE2	CM	C308/G7	C39R
TSK	MTC	B209/B4	R35
TSK	MTC	C309/B4	R35
TST	TL	B209/B8	
TST	TL	C309/B8	
TST	CM	D114/D7	C17R
TST	CM	D131/E7	
TS0-4	DTM	B208/C2-G2	33
TS0-9	CM	C308/A4-G4	C40R
TT	TRK	C310/C9	
TT	OS	C624/B8	
TTA	TL	C310/D8	
TTF	DTM	B408/F8	40

DESIG	CKT	LOC	EQPT LOC *
TTF	CM	C510/F8	C40L
TTF	CM	D610/F8	C40L
TTK	CM	C310/B4	C23L
TTK	OS	C624/A8	
TTL	MTC	C144/D3	R8
TTL	MTC	D217/D3	R8
TTL1,2	MTC	C144/D3,B3	R8
TTL1,2	MTC	D217/B3,D3	R8
TTM	TL	C310/C8	
TT0-4	DTM	B209/B3-D3	32
TT0-9	CM	C309/B3-D3	C39R
TT1	OS	C624/C8	
TVA	CM	C111/B6	T47R
TVT	OS	C211/G8	
TW	CM	C308/F0	C41R
TYM	CM	D411/H4	C27L
TYMA	CM	D411/F0	C27L
TYM1	CM	D420/C1	P26
TZ	CM	C308/F1	C41R
T0-2	MTFC	C607/C4	
T0-2	MTFC	D709/C4	
T0,1,2,4,7	CM	C208/G3	T33R
T0,1,2,4,7	CM	D213/G3	T33R
T12	JLK	C156/F2	
UC	CM	D408/B4	T36R
UK	CM	D411/E4	C31L
UN0-3	JLK	C207/H2	
UT	CM	D420/F2	C27L
U0-9	NG	D413/D8	
U0,1,2,4,7	CM	C208/H3	T36R
U0,1,2,4,7	CM	D213/H3	T36R
VCI	CM	D419/B1	C33R
VFA	LL	B304/G8	
VFA	LL	B305/G7	
VFA	LL	C406/F7	
VFA	LL	C407/G7	
VFA	LL	D510/F7	
VFB	LL	D511/G7	
VFB	LL	B304/G8	
VFB	LL	B305/G7	
VFB	LL	C406/F7	
VFB	LL	C407/G7	
VFB	LL	D510/F7	
VFB	LL	D511/G7	
VFC	LL	B304/G8	
VFC	LL	B305/G7	
VFC	DTM	B426/H2	29
VFC	LL	C406/F7	
VFC	LL	C407/G7	
VFC	LL	D510/F7	
VFC	LL	D511/G7	
VFC	LL	B305/G7	
VFG	DTM	B109/G5	36
VFK	MTC	D416/F3	R9
VFL	CM	C403/G3	C30L
VFL	CM	D417/G4	C30L
VFN0-4	CM	D414/E8	C50L
VFT0-4	DTM	B107/G5	36
VFT0-4	DTM	B109/A5-D5	36
VFT0-4	CM	C403/F2	C46L
VFT0-4	CM	D417/F3	C46L
VF0-4	OR	B426/G8	
VF0-4	CM	C114/D3	C46L
VF0-4	OS	C114/E8	
VF0-4	AMRST	C150/D0	
VF0-4	CM	C150/H5	C46L
VGA	MTC	B107/C0	R11
VGA00-11	LL	B107/C8	
VGB00-11	LL	B304/H8	
VGB00-11	LL	B305/H7	
VGB00-11	LL	C406/G7	
VGB00-11	LL	C407/H7	
VGB00-11	LL	C409/C3	
VGB00-11	LL	C411/E3	
VGB00-11	LL	D507/C3	
VGB00-11	LL	D509/E3	
VGB00-11	LL	D510/G7	
VGB00-11	LL	D511/H7	

DESIG	CKT	LOC	EQPT LOC *
VGC00-11	LL	B304/H8	
VGC00-11	LL	B305/H7	
VGC00-11	LL	C406/H7	
VGC00-11	LL	C407/H7	
VGC00-11	LL	D510/H7	
VGC00-11	LL	D511/H7	
VGC1,2	DTM	B426/B2,D2	29
VGG1,2	DTM	B108.D7	35
VGK	MTC	D416/D3	R9
VGL	CM	C403/D3	C30L
VGL	CM	D417/D4	C30L
VGN0-11	CM	D414/D8	C44L
VGR	DTM	B108/A0	36
VGS00-11	LL	B102/B5-E7	
VGS00-11	LL	B107/C9	
VGT0-11	DTM	B107/C5	35
VGT0-11	DTM	B108/B0-G0	35
VGT0-11	CM	C403/D2	C43L
VGT0-11	MTFC	D417/C1,D1	
VGT0-11	CM	D417/C3,D3	C44L
VGT1	MTC	D416/D3	R6
VG0,1,2,4,7,10	OR	B426/D8	
VG0,1,2,4,7,10	CM	C114/F3	C44L
VG0,1,2,4,7,10	OS	C114/F8	
VG0,1,2,4,7,10	AMRST	C150/B0	
VG0,1,2,4,7,10	CM	C150/H4	C44L
VG10	OR	B426/A8	
VG10	OS	C114/B8	
VP	CM	C137/E3	T43R
VPT	DTM	B105/C4	REL R
VP0-2	DTM	B105/E5-G5	REL R
VTK	DTM	B106/F2	36
VTK1	DTM	B107/D6	36
VTK1	CM	C403/G6	C43L
VTK1	CM	D417/G6	C43L
W	LL	B102/F7	
W	PRTC	B609/B5	
W	PC	C104/A8,E8	
W	OS	C625/C0	
W	PC	D204/A8,E8	
WSD	MTC	B202/E1	RR24
WT	DTM	B111/B2	12
WT	PRT	B611/B9	
WT	CM	C137/B3	C16R
WT	CM	D215/B3	C16R
XACH	DTM	B414/H9	9
XACH	CM	C524/H9	C6L
XACH	CM	D616/H9	C6L
XACS	CM	C406/F3	C6L
XACS	CM	D510/F3	C6L
XAF	DTM	B410/F3	9
XAF	CM	C520/F5	C6L
XAF	CM	D612/E5	C6L
XAFT	CM	C304/D1	C9L
XAJC	DTM	B411/E9	9
XAJC	CM	C521/E9	C6L
XAJC	CM	D613/E9	C6L
XAJS	DTM	B417/H4	9
XAJS	CM	C527/H4	C6L
XAJS	CM	D619/H4	C6L
XALC	DTM	B418/H6	9
XALC	DTM	B419/H6	9
XALC	CM	C528/H5	C6L
XALC	CM	C529/H5	C6L
XALC	CM	D620/H5	C6L
XALC	CM	D621/H5	C6L
XALR	DTM	B410/E3	9
XALR	CM	C520/E5	C6L
XALR	CM	D612/E5	C6L
XAN	CM	D420/E9	P25
XATS	DTM	B417/H7	9
XATS	CM	C527/H7	C6L
XATS	CM	D619/H7	C6L
XAVGB	DTM	B304/G4	9
XAVGB	DTM	B305/G5	9
XAVGB	CM	C406/F3	C6L
XAVGB	CM	C407/H4	C6L

* FOR EXPLANATION OF EQPT LOC; REFER TO SHEET NOTE 1 ON SHEET A701.

ISSUE	DWG SIZE	APPARATUS INDEX
5	C2	
A308	SFD-10-01	BELL LABORATORIES

PRINTED IN U.S.A.

RELAYS

DESIG	CKT	LOC	EQPT LOC *
XAVGB	CM	C409/E7	C6L
XAVGB	CM	D507/D7	C6L
XAVGB	CM	D510/F3	C6L
XAVGB	CM	D511/H4	C6L
XBT	DTM	B106/C2	10
XBT	CM	C107/C3	C7L
XBT	CM	D131/C8	C7L
XBT	CM	D207/C3	C7L
XCF	DTM	B428/B0	9
XCH	DTM	B414/H8	8
XCH	CM	C524/H8	C5L
XCH	CM	D616/H8	C5L
XCKR	CM	C312/F2	C7L
XCL	DTM	B105/H6	7
XCL	CM	C119/F5	C7L
XCLC	CM	C110/C5	C7L
XCLC	CM	D208/F4	C7L
XCP	CM	C119/D5	T49R
XCR	CM	C119/D5	C7L
XCS	DTM	B427/F1	8
XCS	CM	C406/D3	C5L
XCS	CM	D510/D3	C5L
XDL	CM	C119/E5	C7L
XF	DTM	B410/H8	8
XF	CM	C520/G8	C5L
XF	CM	D612/G8	C5L
XFT	CM	C304/C1	C9L
XFT	MTC	C304/G0	R36
XFTN	CM	D414/B0	C4L
XFUN	CM	D414/D0	C4L
XHG	DTM	B107/E4	10
XHG	CM	C409/E7	C7L
XHG	CM	C411/D0	C7L
XHG	CM	D507/E6	C7L
XHG	CM	D509/D0	C7L
XJC	DTM	B411/D9	8
XJC	CM	C521/D9	C5L
XJC	CM	D613/D9	C5L
XJG	DTM	B408/B4	8
XJG	CM	C510/A4	C5L
XJG	CM	D610/B4	C5L
XJS	DTM	B417/H3	8
XJS	DTM	B418/F1	8
XJS	CM	C527/H2	C5L
XJS	CM	C528/E0	C5L
XJS	CM	D619/H2	C5L
XJS	CM	D620/E0	C5L
XJS1	DTM	B418/F1	8
XJS1	CM	C528/F0	C10L
XJS1	CM	D620/F1	C10L
XLC	DTM	B418/G7	8
XLC	DTM	B419/G7	8
XLC	DTM	B421/C3	8
XLC	CM	C528/G6	C5L
XLC	CM	C529/G6	C5L
XLC	CM	D307/A4	C5L
XLC	CM	D620/G5	C5L
XLC	CM	D621/G6	C5L
XLG	DTM	B107/F4	10
XLG	CM	C409/B7	C7L
XLG	CM	D507/B7	C7L
XLH	DTM	B420/C8	25
XLH	DTM	B423/E1	25
XLH	DTM	B424/E1	25
XLO	CM	B306/F4	C7L
XLO	LLC	C408/F4	
XLR	DTM	B410/A4	8
XLR	CM	C520/A4	C5L
XLR	CM	D612/A4	C5L
XLS	DTM	B416/H2	10
XLS	CM	C526/H2	C7L
XLS	CM	D618/H2	C7L
XM	AMRST	B430/C2	
XMRL	CM	C107/D3	C7L
XMRL	CM	D131/B8	C7L
XMRL	CM	D207/D3	C7L
XMR1	AMRST	C517/E7	

DESIG	CKT	LOC	EQPT LOC *
XMR2	AMRST	C107/H4	
XN	CM	D407/G9	C7L
XNS	CM	D407/F9	T34R
XOB	CM	C111/E4	T47R
XOR	AMRST	B430/C3	
XPG	DTM	B403/A1	9
XPG	CM	C505/A1	C7L
XPG	CM	D605/A1	C7L
XPT	CM	C216/E6	C8L
XPT	CM	D306/B5	C8L
XR	PRT	B607/A3	
XRC	CM	D415/G7	C8L
XRL	PRT	B608/B6	
XRL	CM	C107/E3	C8L
XRS1,2	CM	D628/C7,D7	C5L
XRS3,4	CM	D628/A3,B3	C6L
XS	CM	C207/C2	C8L
XSA	CM	C207/C2	C22L
XSC	NG	D425/A7	
XSL	DTM	B423/D8	9
XSL	CM	C533/D8	C8L
XSL	CM	D625/C8	C8L
XSS	CM	C206/D0	C8L
XT	PRT	B607/G1	
XT	PRT	B608/B8	
XT	CM	C110/F5	C8L
XT	CM	D208/F5	C8L
XTA	CM	C110/E4	C9L
XTA	CM	C704/A3	C9L
XTA	CM	D208/F5	C9L
XTC	DTM	B104/D3	10
XTC1	DTM	B104/E3	10
XTG1	DTM	B209/D5	7
XTG1	CM	C309/D5	C8L
XTRK	DTM	B106/G3	10
XTRK	CM	C108/D5	C8L
XTRK	CM	D210/D5	C8L
XTRL	DTM	B106/D2	10
XTRL	CM	C107/B3	C8L
XTRL	CM	D207/B3	C8L
XTS	DTM	B417/H5	8
XTS	CM	C311/G4	C5L
XTS	CM	C527/H5	C5L
XTS	CM	D307/G4	C5L
XTS	CM	D619/H5	C5L
XTS1	DTM	B417/H5	9
XTS1	CM	C311/G4	C8L
XTS1	CM	C527/H5	C8L
XTS1	CM	D307/G4	C8L
XTS1	CM	D619/H5	C8L
XTV	CM	C111/A6	T47R
XT1	CM	C212/D1	C4L
XT1,3	CM	C210/D1	C4L
XT2	CM	C211/A2	C4L
XT5	CM	C211/G2	C6L
XVGA	DTM	B107/C6	10
XVGB	DTM	B304/G5	8
XVGB	DTM	B305/H5	8
XVGB	CM	C406/G3	C5L
XVGB	CM	C407/H4	C5L
XVGB	CM	C409/C7	C5L
XVGB	CM	C411/D1	C5L
XVGB	CM	D507/C7	C5L
XVGB	CM	D509/D1	C5L
XVGB	CM	D510/G3	C5L
XVGB	CM	D511/H4	C5L
XVHF	DTM	B426/D2	8
X11	CM	C704/A2	T26R
Y0,3	OR	B508/B4	
Y6,9	OR	B508/C4	
Z	LL	B102/G7	
Z	PRTC	B609/B5	
Z	PC	C104/B8,F8	
Z	OS	C625/E0	
Z	PC	D204/B8,F8	
Z1-3	OR	B508/D4	
Z2A	OR	B508/F4	

DESIG	CKT	LOC	EQPT LOC *
0,1,2,4,7,10	SR	D112/A7-E7	
0NN	CM	C216/A4	C26L
0NN	CM	D306/B6	C26L
1F	CM	C517/F4	C38R
1FA	CM	C517/F4	C38R
1SE	CM	C216/A4	C26L
1SE	CM	D306/B6	C26L
10LV	DTM	B410/E2	22
10LV	CM	C520/E3	C10'
10LV	CM	D612/E3	C10
10TLF	DTM	B405/E9	41
10TLF	CM	C507/F8	C37L
10TLF	CM	D607/F8	C37L
11A	OR	B507/C8	
11B	OR	B507/B8	
11C	OR	B507/B8	
11X	PRT	B603/E7	
11X	CM	C110/E5	T26R
12LV	DTM	B410/F2	22
12LV	CM	C520/E3	C10L
12LV	CM	D612/E3	C10L
2-3TLF	DTM	B405/B9	41
2-3TLF	CM	C507/B8	C37L
2-3TLF	CM	D607/A8	C37L
2CK	IR	D113/B0	
2F	CM	C517/F4	C38R
2FA	CM	C517/G4	C38R
2G	DTM	B407/G4	42
2G	CM	C509/G4	C38L
2G	CM	D609/G4	C38L
2P	OR	B429/F6	
2P	DTM	B429/G2	31
2P	OR	B503/E6	
2P	DTM	B503/F7	31
2PMR	DTM	B429/H3	29
2SA	CM	C216/B4	C26L
2SA	CM	D306/C6	C26L
2TLF	DTM	B405/A9	41
2TLF	CM	C507/A8	C37L
2TLF	CM	D607/A8	C37L
20F	DTM	B408/A6	40
20F	CM	C510/A6	C40L
20F	CM	D610/A6	C40L
3G	DTM	B407/G7	42
3G	CM	C509/G7	C38L
3G	CM	D609/G8	C38L
3NA	CM	C216/B4	C26L
3NA	CM	D306/C6	C26L
3TLF	DTM	B405/B9	41
3TLF	CM	C507/B8	C37L
3TLF	CM	D607/B8	C37L
4DG	OS	C212/F9	
4NE	CM	C216/C4	C26L
4NE	CM	D306/D6	C26L
4NG	CM	D423/D6	P26
4TLF	DTM	B405/B9	41
4TLF	CM	C507/B8	C37L
4TLF	CM	D607/B8	C37L
40F	DTM	B408/B6	40
40F	CM	C510/B6	C40L
40F	CM	D610/A6	C40L
5DG	OS	C212/F9	
5ST	CM	C216/C4	C26L
5ST	CM	D306/D6	C26L
5TLF	DTM	B405/C9	41
5TLF	CM	C507/C8	C37L
5TLF	CM	D607/C8	C37L
6NT	CM	C216/C4	C26L
6NT	CM	D306/E6	C26L
6TFA	DTM	B405/C9	S-5
6TFA	CM	C507/C8	C11R
6TFA	CM	D607/C8	C11R
6TLF	DTM	B405/C9	41
6TLF	CM	C507/D8	C37L
6TLF	CM	D607/D8	C37L
60F	DTM	B408/C6	S-5
60F	CM	C510/C6	C11R

DESIG	CKT	LOC	EQPT LOC *
60F	CM	D610/C6	C11R
7Q	DTM	B408/D6	40
7Q	CM	C510/D6	C40L
7Q	CM	D610/D6	C40L
7RN	CM	C216/D4	C26L
7RN	CM	D306/E6	C26L
7TFA	DTM	B405/D9	S-5
7TFA	CM	C507/D8	C11R
7TFA	CM	D607/D8	C11R
7TLF	DTM	B405/D9	41
7TLF	CM	C507/D8	C37L
7TLF	CM	D607/D8	C37L
8NG	CM	D423/E6	P26
8SP	CM	C216/D4	C26L
8SP	CM	D306/F6	C26L
8TLF	DTM	B405/D9	41
8TLF	CM	C507/E8	C37L
8TLF	CM	D607/E8	C37L
9NP	CM	C216/E4	C26L
9NP	CM	D306/F6	C26L
9TLF	DTM	B405/E9	41
9TLF	CM	C507/F8	C37L
9TLF	CM	D607/E8	C37L

JACKS

DESIG	CKT	LOC	EQPT LOC *
BSR	JLK	B609/E5	
CK3	SR	D112/F3	
IN	M AMPL	C824/E1	
IRMB	JLK	D114/G5	
IRMC MB	JLK	C105/F3	
IRMC MB	JLK	D205/F3	
JS0-9	LL	B414/E0,E1	
JS0-9	TL	B414/E4,E5	
JS0-9	TL	B418/F5,F6	
JS0-9	TL	B419/F5,F6	
JS0-9	TL	B423/B6	
JS0-9	LL	C524/E0,E1	
JS0-9	TL	C524/E4,E5	
JS0-9	TL	C528/F4	
JS0-9	TL	C529/F4,F5	
JS0-9	LL	D616/E0,E1	
JS0-9	TL	D616/E4,E5	
JS0-9	TL	D620/F4	
JS0-9	TL	D621/F4	
JS0-9	LL	D808/A4	
KP	SR	D112/F4	
L	AMRST	C149/A1,A2	
LLMC MB	JLK	B103/B3,F3	
LMB	LL	B110/G5	
M-D-MB	JLK	B110/D2	
MB	JLK	C207/G3	
MB	OGT	C309/C9	
MB	JLK	C613/B8	
MB	JLK	C616/D9	
MB	JLK	C626/D9	
MB	JLK	D110/D9	
MB	OGT JK	D124/C8	
MBE	ALL	C410/D9	
MBE	ALL	D508/D9	
MBO	ALL	D508/B9	
MBO	ALL	C410/B9	
MEAS 600	T TERM	C824/E7	
MEAS 900	T TERM	C824/F7	
MMB	JLK	B110/D2	
MMB	JLK	C106/D2	
MMB	JLK	D206/D2	
NMB	NG	D408/G1	
OF-	T-REG	C119/G4	
ORMB	JLK	B209/C9	
ORMB	JLK	B513/E8	
ORMC MB	JLK	C105/B3	
ORMC MB	JLK	D205/B3	
OUT	M AMPL	C824/A1	
PC-	T-REG	C119/F4	
PRT MB	JLK	B605/H0	
PRT MB	JLK	B611/B5	
PRTC MB	JLK	B605/C4,F4	
PRTC MB	JLK	B611/F2	
RCVR	T TERM	C824/A3	
REC1	T TERM	C824/C3,B7	
REC2	T TERM	C824/D3	
RM	MISC	C607/E0	
SC MB	JLK	C204/B9,C9	
SD	T TERM	C824/B3,B7	
SP	SR	D112/F2	
T	JLK	C616/E9	
T	IT	C617/C2	
T	OGT JK	C626/E9	
T	IT	C627/C2	
T	JLK	D110/D9	
T	IT	D111/B2	
T	OGT JK	D124/C8	
T	IT	D125/B2	
T	IT	D127/B1	
T	IT	D706/F1	
TM1,2	JLK	C824/G9,H9	
TRK1,2	T TERM	C824/B7,E7	
TRMB	TRC	C607/D4	
TRMB	TRC	D709/D4	
TRMB-CM	JLK	C607/D7	
TRMB-CM	JLK	D709/D8	
TRMB-DTM	JLK	B502/H1	

* FOR EXPLANATION OF EQPT LOC; REFER TO SHEET NOTE 1 ON SHEET A.01.

APPARATUS INDEX	DWG SIZE	ISSUE
	C2	5
BELL LABORATORIES	SFD-10-01	A309

PRINTED IN U.S.A.

JACKS

DESIG	CKT	LOC	EQPT LOC *
TRMB-PRT	JLK	B611/B5	
TST1,2	T TERM	C824/B6,E5	
1000/0/600	T TERM	C824/G5	
1000/0/900	T TERM	C824/F5	

KEYS

DESIG	CKT	LOC	EQPT LOC *
ACO	AMRST	B430/C3	
AR	MISC	B110/C8	
AR	LLDC	B112/B1,C1	
AR	PCMB	B204/F9	
AR	PC	B303/A8,E8	
AR	MISC	B611/H5	
AR	MISC	C106/C8	
AR	PCMB	C306/D9	
AR	PCMB	C405/A7,E7	
AR	MISC	D206/C8	
AR	PCMB	D304/D9	
AR	PCMB	D409/A7,E7	
AR	PCMB	D505/A7,E7	
A0-9	MTC	B603/A8	
A0-9	MTC	C115/A1	
A0-9	MTC	C145/G0	
A0-9	MTC	D212/B1	
A0-9	MTC	D218/G0	
B	LLDC	B112/A5	
BAT	JLK	B110/F8	
BAT	JLK	C106/E9	
BAT	JLK	D206/E9	
BB	MTC	C144/B2	
BB	MTC	D217/B2	
B0-9	MTC	B603/B8	
B0-9	MTC	C115/B1	
B0-9	MTC	C145/G1	
B0-9	MTC	D212/B1	
B0-9	MTC	D218/G1	
C	LLDC	B112/E5	
CCT	JLK	B425/G6	
CCT	JLK	C530/D1	
CCT	JLK	C535/G8	
CCT	JLK	D622/D1	
CCT	JLK	D627/G8	
CGB	MTC	B304/E3,F3	
CGB	MTC	B305/F3	
CGB	MTC	C113/E1	
CGLS	MTC	B422/E6	
CGT	JLK	C530/E1	
CGT	JLK	D622/E1	
CHT	MTC	B209/A4	
CHT	MTC	C309/A4	
CH0-9	MTC	B412/D1,D2	
CH0-9	MTC	C522/C2,D1	
CH0-9	MTC	D614/D1,C2	
CLB	LLDC	B112/C3	
CLC	LLDC	B112/F3	
CMTCA	JLK	C142/A5	
CMTCA	JLK	D134/A5	
CMTCB	JLK	C142/C5	
CMTCB	JLK	D134/C5	
CNR	MTC	C112/C1	
CON	MTC	B425/E1,F1	
CON	MTC	C535/C1,D1	
CON	MTC	D627/C1,D1	
CRU0-9	MTC	B304/D2,F1	
CRU0-9	MTC	B305/D2,G1	
CRU0-9	MTC	C113/D1	
CRU0-9	MTC	C406/E1	
CRU0-9	MTC	C407/F1	
CRU0-9	MTC	D510/E1	
CRU0-9	MTC	D511/F1	
CSGA	MTC	B304/F0,E3	
CSGA	MTC	B305/F0,E2	
CSGA	MTC	C113/E1	
CSGB	MTC	B304/F0,F3	
CSGB	MTC	B305/F0,G2	
CSGB	MTC	C113/F1	
CST0-2	MTC	C113/A1	
CST0-9	MTC	B304/B2,F1	
CST0-9	MTC	B305/B2,F1	
CST0-9	MTC	C406/B1	
CST0-9	MTC	C407/C1	
CST0-9	MTC	D510/C1	
CST0-9	MTC	D511/C1	
CST0,1,2,4,7	MTC	C113/A1	
CSU0-9	MTC	B304/C2,E1	
CSU0-9	MTC	B305/C2,E1	
CSU0-9	MTC	C113/B1	
CSU0-9	MTC	C406/D1	
CSU0-9	MTC	C407/D1	
CSU0-9	MTC	D510/D1	
CSU0-9	MTC	D511/D1	
CTR	JLK	C213/B6,E6	
C0-9	MTC	B603/C8	
C0-9	MTC	C115/B1	
C0-9	MTC	C145/G2	
C0-9	MTC	D212/C1	
C0-9	MTC	D218/G2	
DC	AMRST	D104/E1	
DCK	MTC	D114/C9	
DT	MTC	D116/G4	
D0-9	MTC	C115/C1	
D0-9	MTC	C145/G3	
D0-9	MTC	D212/D1	
D0-9	MTC	D218/G3	
D0-9	CM	D424/D8	
D0-9	MTC	D426/E5	
EBH	MTC	C507/E1	
EBH	MTC	D607/E1	
ETHC	MTC	D306/F1	
EXR	JLK	C136/H5	
EXR	JLK	D214/G5	
E0-9	MTC	C115/C1	
E0-9	MTC	C145/G4	
E0-9	MTC	D212/D1	
E0-9	MTC	D218/G4	
FACD	MTC	C110/B1	
FCG	MTC	B425/E3	
FCG	MTC	C533/G6	
FCG	MTC	C535/D3	
FCG	MTC	D625/G6	
FCG	MTC	D627/D3	
FG0-2	MTC	B202/G3-H8	
FG0-2	MTC	C304/G1-G5	
FG1,2	MTC	C306/H8	
FG1,2	MTC	D211/B3,B4	
FG1,2	MTC	D304/H8	
FS	MTC	B202/H4	
FS	MTC	B405/G2	
FS	MTC	C304/H4	
FS	MTC	C507/F2	
FS	MTC	D607/F1	
FS0-9	MTC	B202/F3,G2	
FS0-9	MTC	B202/F6	
FS0-9	MTC	C304/F1,G1	
FS0-9	MTC	C304/G3	
FS0-9	MTC	C306/H9	
FS0-9	MTC	D211/D4-F4	
FS0-9	MTC	D304/F8,G8	
FT0-3	MTC	B107/A0	
FT0-3	MTC	C114/B1	
FT0-5	MTC	C114/B1	
FT0-5	MTC	C410/H8	
FT0-5	MTC	D416/A5	
FT0-5	MTC	D508/G8	
FU0-9	MTC	B107/A0	
FU0-9	MTC	C114/C1	
FU0-9	MTC	C410/G5	
FU0-9	MTC	D416/B5	
FU0-9	MTC	D508/G5	
FVD0	MTC	D208/E2	
F0-9	MTC	C115/D1	
F0-9	MTC	C145/G4	
F0-9	MTC	D212/E1	
F0-9	MTC	D218/G4	
GT	MTC	C535/C1	
GT	MTC	D627/C2	
G0-9	MTC	C115/D1	
G0-9	MTC	C145/G5	
G0-9	MTC	D212/E1	
G0-9	MTC	D218/G5	
HG0-9	MTC	B107/D0	
HG0-9	MTC	C114/E1	
HG0-9	MTC	D416/F5	
HG0-9	MTC	D624/G6	
HLD	AMRST	C155/E8	
HTR	MTC	B111/H5	
HTR	MTC	C137/F1	
HTR	MTC	D215/F2	
H0-9	MTC	C115/E1	
H0-9	MTC	C145/G6	
H0-9	MTC	D212/F1	
H0-9	MTC	D218/G6	
IAO	MTC	B422/A8	
IAO	MTC	C532/A8	
IAO	MTC	D624/A7	
IC-AB	MTC	D208/D0,F1	
IC-FVD	MTC	D208/D0	
IC-NTAN	MTC	D208/E1,F1	
IC-OA	MTC	D208/B1,G1	
IC-OB	MTC	D208/C1,F1	
IG0-14	AMRST	D116/E7	
IG0-14	AMRST	D117/E4	
INC	MTC	D116/G5	
IR	MTC	D116/G5	
IRGT	AMRST	D116/E7	
IRGT	AMRST	D117/D2	
ITC-RN0-9	MTC	C216/B9	
ITC-RN0-9	MTC	D306/D1	
JSQ0-5	MTC	B405/B2	
JSQ0-5	MTC	B405/H2	
JSQ0-5	MTC	C507/A2	
JSQ0-5	MTC	C507/H0	
JSQ0-5	MTC	D607/A2,H0	
J0-9	MTC	C115/E1	
J0-9	MTC	C145/G7	
J0-9	MTC	D212/F1	
J0-9	MTC	D218/G7	
KRC	MTC	C144/A2	
KRC	MTC	D217/A2	
KRC	MTC	D415/E1	
KY	MTC	C144/A2	
KY	MTC	D217/A2	
K0-9	MTC	C115/F1	
K0-9	MTC	C145/G7	
K0-9	MTC	D212/G1	
K0-9	MTC	D218/G7	
LB	MTC	B422/F6	
LB	CM	C532/D4,H6	
LB	MTC	D426/E0	
LB	MTC	D624/D5,H6	
LBL	MTC	B422/F5	
LBL	CM	C532/D1,D4,H6	
LBL	MTC	D624/D1,D4,H6	
LGT	MTC	C535/D1	
LGT	MTC	D627/D2	
LK	MTC	B607/A9	
LP	T TERM	C824/A8	
LR	MTC	D114/B9,C9	
LT1	MTC	B603/E8	
LT1	MTC	C110/D1	
L0-9	MTC	C115/F1	
L0-9	MTC	C145/G8	
L0-9	MTC	D212/G1	
L0-9	MTC	D218/G8	
MC-AR	JLK	B106/G9	
MC-AR	JLK	C107/B9	
MC-AR	JLK	C142/D5	
MC-AR	JLK	D134/D5	
MC-AR	JLK	D207/B9	
MCC	TRC	C607/D1	
MLC	TRC	D709/D1	
MCOR	TRC	C607/E1	
MCOR	TRC	D709/E1	
MDI	JLK	C120/C9	
MF	MTC	B105/B0	
MF	MTC	C111/B1	
MFEB	MTC	C410/G1	
MFEB	MTC	D508/G1	
MFSB	MTC	C410/G1,G4	
MFSB	MTC	D508/G1,G4	
MIR	AMRST	B430/F2	
MLF	MTC	B105/B0	
MLF	MTC	C111/B1	
MPIR	AMRST	B430/F2	
MPOR	AMRST	B430/B3,E3,F1	
MPOS	AMRST	B430/F2	
NO	MTC	C310/B1	
NDT	TT	C310/B0	
NGA-H	MTC	D421/H6	
NH	MTC	D805/F4	
NN	MTC	D805/E4	
NT	MTC	D805/E5	
NTC	MTC	B422/C1	
NTC	CM	C532/G3	
NTC	MTC	D624/G2	
NTFS	MTC	B202/H3	
NTFS	MTC	B405/G2	
NTFS	MTC	C304/G3	
NTFS	MTC	C507/F2	
NTFS	MTC	D607/F1	
NTTS	MTC	B208/H8,H9	
NTTS	MTC	B209/A4,B4	
NTTS	MTC	B405/B1	
NTTS	MTC	C309/A4,B4	
NTTS	MTC	C507/A0	
NTTS	MTC	D607/A0	
OBS	MTC	C111/D1	
OCN	MTC	D207/E1	
OR	MTC	B430/G4	
OR	MTC	D116/G5	
ORIG	MTC	D116/G5	
OSS	MTC	C204/A0	
OSS	MTC	C507/G1	
OSS	MTC	D607/G1	
OS0-4	MTC	C206/B4	
OT	MTC	B608/C1	
PBXH	MTC	C507/E1	
PBXH	MTC	D607/E1	
PD	MTC	C112/A2	
PHC	MTC	D208/D2	
PMM	MTC	C113/C1	
PRL	MTC	B608/A4,B1	
PS	MTC	C112/A1	
PTL	MTC	D808/C8	
PTR	MTC	B608/A3,C1,D4	
PTRC-AR	JLK	B609/D5	
PU	CM	C532/D1	
PU	MTC	C535/C2,E2	
PU	MTC	D624/D1	
PU	MTC	D627/D2	
RA0-3	MTC	B206/D0,E3,E4	
RA0-3	MTC	C516/B5,D5	
RCT1	MTC	D415/B1	
RC1-15	MTC	D415/D1	
REC	MTC	B502/E1	
REC	MTC	C605/G8,H6	
REC	MTC	D705/G8,H6	
REC2	T TERM	C824/D4,E4	
RLK	MTC	B608/A4	
RLT	MTC	C107/F2	
ROT	MTC	B502/G1	
ROT	MTC	C605/H8	
ROT	MTC	C614/B2,E2,F8	
ROT	MTC	D416/G5	
ROT	MTC	D705/H8	
RT0-3	MTC	B105/D0-H1	
RV	MTC	B425/F2	
RV	MTC	C535/E1	
RV	MTC	D627/E1	
SCN	MTC	C112/C2	
SD-REC1	T TERM	C824/B8	
SDR	MTC	D116/G5	
SGA	MTC	C204/D2	
SGA	MTC	C207/E1	
SGB	MTC	C204/E2	

* FOR EXPLANATION OF EQPT LOC; REFER TO SHEET NOTE 1 ON SHEET A701.

ISSUE	DWG SIZE	APPARATUS INDEX
5	C2	
A310	SFD-10-01	BELL LABORATORIES

PRINTED IN U.S.A.

KEYS

DESIG	CKT	LOC	EQPT LOC *
SGB	MTC	C207/E1	
SPL	MTC	D208/A3	
SPL	MTC	D804/C0	
SRS0-9	AMRST	D116/B3,D3	
SRS0-9	AMRST	D117/B2	
STM	AMRST	B430/C3	
STM	AMRST	C517/E8	
STP1,2	MTC	B412/D1	
STP1,2	MTC	B415/F1,G1	
STP1,2	MTC	C522/D1	
STP1,2	MTC	C525/F1-H1	
STP1,2	MTC	D614/D1	
STP1,2	MTC	D617/F0,G0	
STT	AMRST	B430/C3	
STT	AMRST	C517/D8	
STT	AMRST	D116/G7	
S0-9	CM	D424/F8	
S0-9	MTC	D808/D8,E8	
TC	MTC	B425/C1	
TC	MTC	C535/B1	
TC	MTC	D627/B1	
TCT	MTC	B111/B6	
TCT	MTC	B425/E1,F1	
TCT	MTC	C136/C1	
TCT	MTC	C530/A1	
TCT	MTC	C535/C1,E1	
TCT	MTC	D214/C1	
TCT	MTC	D624/C1	
TCT	MTC	D627/C1,E1	
TG	MTC	C310/A1	
TGT	MTC	D622/A1	
THC	MTC	D208/D2	
THC	MTC	D306/G1	
TMS1,2	T TERM	C824/B4-D8	
TM1,2	JLK	C824/H9	
TO	T TERM	C824/C6,C7	
TP	MTC	C113/C1	
TR	PCMB	B204/A8-F8	
TR	PC	B303/A1-E9	
TR	PCMB	C306/A9-E9	
TR	PCMB	C405/B0,B8	
TR	PCMB	C411/B3,D3	
TR	T TERM	C824/D6,C8	
TR	PCMB	D304/A9-E9	
TR	PCMB	D409/A0,E0	
TR	PCMB	D409/A5,E5	
TR	PCMB	D505/A0-E8	
TR	PCMB	D509/A3,D3	
TR	OI	D706/B8	
TR-AR	JLK	B513/A8	
TRR-AR	JLK	C156/F1,G3	
TRS	MTC	B106/A0,B1	
TRS	MTC	B611/B3	
TRS	MTC	C108/F0	
TRS	MTC	D210/F0	
TR2	MTC	B106/E1,F1	
TR2	MTC	B611/A3	
TR2	MTC	C108/E1	
TR2	MTC	D210/E0	
TR2	MTC	D306/G1	
TS	MTC	B208/H8,H9	
TS	MTC	B405/B1	
TS	MTC	C507/A1	
TS	T TERM	C824/B4-D6	
TS	MTC	D607/A1	
TST	OI	D706/B8	
TST1	MTC	B209/C0	
TST1	MTC	C309/C0	
TS0-18	MTC	C309/F0	
TS0-19	MTC	C309/C0	
TS0-8	MTC	B209/F0	
TS0-9	MTC	B209/C0	
TS1-19	MTC	C309/G0	
TS1-9	MTC	B209/G0	
TTC	MTC	C313/G0	
TTC	MTC	D629/H0	
TTL	MTC	C144/B2,D2	

DESIG	CKT	LOC	EQPT LOC *
TTL	MTC	D217/B2,D2	
VFO-4	MTC	B107/F0	
VFO-4	MTC	C114/D1	
VFO-4	MTC	D416/F5	
VGT1	MTC	C114/F0,G0	
VGT1	MTC	D416/D4,D5	
VGO-11	MTC	B107/B0	
VGO-11	MTC	D416/C5	
VGO-13	MTC	C114/F1	
XLH	MTC	B422/G2	
XLH	CM	C532/F3	
XLH	MTC	D624/F2	
X11	MTC	D208/E2	
1-4	MFCS	C615/F1	
11	MTC	B603/E8	
11	MTC	C110/D0	
11	MTC	D208/E2	
2-5	MFCS	C615/F1	
2CD	MTC	B603/C9	
3-6	MFCS	C615/F1	

LAMPS

DESIG	CKT	LOC	EQPT LOC *
ACV	JLK	C535/G8	
ACV	JLK	D627/G8	
AS	TT	B422/B0	
AS	TT	C532/B1	
AS	TT	D624/B1	
ATT	APTT	C310/G6	
ATT	MTC	C310/G9	
B	LLDC	B112/C5	
BT-OF	MTC	B106/B0	
BT-OF	MTC	C107/C0	
BT-OF	MTC	D207/C0	
BY	MTC	D426/D3	
BY	MTC	D628/BC	
C	LLDC	B112/D5	
CCT	JLK	B425/H6	
CCT	JLK	C530/D1	
CCT	JLK	C535/G8	
CCT	JLK	D622/D1	
CCT	JLK	D627/G8	
CE	CM	D211/G6	
CGT	JLK	C530/E1	
CGT	JLK	D622/E1	
CH	PCMB	B204/B8	
CH	PCMB	B303/A1,E1	
CH	PCMB	C306/A9	
CH	PCMB	C405/A0,E0	
CH	PCMB	D304/A9	
CH	PCMB	D409/A0,D1	
CH	PCMB	D505/A1,E1	
CK	MTC	C614/F2	
CMA	MTC	B607/E8	
CMB	MTC	B607/E8	
CMC	MTC	B607/E8	
CMCGA	JLK	C142/C5	
CMCGA	JLK	D134/C5	
CMCGB	JLK	C142/F5	
CMCGB	JLK	D134/F5	
CM3	MTC	B607/D8	
CNR	MTC	C112/F1	
CO	AMRST	D116/A8	
CON	DTM	B425/D9	
CON	CM	C535/C8	
CON	CM	D627/C8	
CR	OR	B511/B3	
CS	DTM	B304/B6	
CS	DTM	B427/C3	
DIS1	MTC	B502/D2	
DIS1	MTC	C605/F6	
DIS1	MTC	D705/F6	
DL	JLK	B611/B5	
DL	JLK	C607/F7	
DL	JLK	D709/F7	
F	DTM	B410/H8	
F	CM	C520/G8	
F	CM	D612/G8	
FA	MISC	B110/A8	
FA	MISC	B611/F5	
FA	MISC	C106/A8	
FA	MISC	D206/A8	
FG	MISC	B110/B8	
FG	MISC	B611/F6	
FG	MISC	C106/B8	
FG	MISC	D206/B8	
FL1	MTC	D628/F0	
FTC	MTC	B202/H0	
FTC	MTC	C304/H1	
G RED	LLDC	B112/B5	
GR	MTC	B608/D1	
G1	MTC	B608/D1	
HBS	CM	D410/A2	
HD	PRT	B605/H3	
HD	MTC	B608/F1	
HG	DTM	B107/E4	
HG	CM	C409/E7	
HG	CM	C411/C0	
HG	CM	D507/E7	
HG	CM	D509/C0	

DESIG	CKT	LOC	EQPT LOC *
HGB	DTM	B107/E4	
HGB	CM	C409/D7	
HGB	CM	C411/C0	
HGB	CM	D507/D7	
HGB	CM	D509/C0	
IE	OS	C213/D8	
IRMC	JLK	D206/E8	
IRP	JLK	D206/E7	
JC	DTM	B411/D9	
JC	CM	C521/D9	
JC	CM	D613/D9	
JG	DTM	B408/D4	
JG	CM	C510/D4	
JG	CM	D610/D4	
JS	DTM	B417/H3	
JS	DTM	B418/E0	
JS	CM	C527/H3	
JS	CM	C528/F0	
JS	CM	D619/H3	
JS	CM	D620/F0	
LBS0-2	CM	B302/B7,D7	
LBS0-2	CM	C404/B7,D7	
LBS0-2	CM	D504/B7,D7	
LBS0,1	DTM	B302/F7,H7	
LBS0,1	DTM	C404/F7,H7	
LBS0,1	DTM	D504/F7,H7	
LC	DTM	B418/G6	
LC	DTM	B419/G6	
LC	DTM	B421/D3	
LC	CM	C311/A3	
LC	CM	C528/G5	
LC	CM	C529/G5	
LC	CM	D307/A3	
LC	CM	D620/G5	
LC	CM	D621/G5	
LFS	CM	B302/B2,D2	
LFS	DTM	B302/E3,G3	
LFS	CM	C404/B2,D2	
LFS	DTM	C404/E3,G3	
LFS	CM	D504/B2,D2	
LFS	DTM	D504/E3,G3	
LG	DTM	B107/F4	
LG	CM	C409/B7	
LG	CM	D507/B7	
LHMT	MTC	B422/G6	
LHMT	CM	C532/F5	
LHMT	MTC	D624/F5	
LK	AMRST	D116/A7	
LK	IR	D126/C6	
LK2	MTC	B502/E2	
LK2	MTC	C605/F0	
LK2	MTC	D705/F0	
LLC0	JLK	B302/A9-G9	
LLC0	JLK	C404/F9	
LLC0	JLK	D504/G9	
LLJ	MTC	B423/H1	
LLJ	MTC	C533/G3	
LLJ	MTC	D625/G3	
LLMC	JLK	B106/F9	
LMB	LL	B110/G7	
LO	AMRST	D115/A6	
LOB	CM	B306/F4	
LOB	CM	C408/F4	
LR	DTM	B410/A5	
LR	CM	C520/A5	
LR	CM	D612/A5	
LS	DTM	B416/H4	
LS	CM	C526/H4	
LS	CM	D618/H4	
LSA	DTM	B416/H4	
LSA	CM	C526/H4	
LSA	CM	D618/H4	
M	JLK	B110/D8	
M	JLK	C106/D8	
M	JLK	D206/D8	
MA	CM	C207/D4	
MB	CM	C207/D4	

DESIG	CKT	LOC	EQPT LOC *
MBA	LLDC	B112/H5	
MC	CM	C207/D4	
MFG	JLK	B110/D7	
MFG	JLK	C106/D7	
MFG	JLK	D206/D7	
MJ	ALM	B513/C7,C8	
MJ	ALM	B611/G3	
MN	ALM	B513/C7,C8	
MPP	CM	C410/B4,E4	
MPP	MTC	C410/G4	
MPP	CM	D508/B4,E4	
MPP	MTC	D508/G4	
MRL	MTC	B502/A1	
MRL	MTC	C107/D0	
MRL	MTC	D207/D0	
MTT	APTT	C310/E6	
MTT	MTC	C310/E9	
NBS1-4	CM	D408/A3	
NGB	CM	D414/F1	
NGB	CM	D425/D0	
NGC	JLK	D408/E0	
NGKB	CM	D411/F4	
NGS	CM	D408/A4	
NMB	NG	D408/G1	
NTB	MTC	B422/D5	
NTB	CM	C532/D4	
NTB	MTC	D624/C3	
OFL	MTC	D628/A0	
OH	AMRST	D116/A7	
OK	AMRST	C614/F5	
ORB	JLK	B513/A8	
ORMC	JLK	C106/E8	
ORP	JLK	C106/E7	
ORST-0	LLDC	B112/G5	
OSA	CM	C205/C0	
OSB	CM	C205/E0	
PN	DTM	B402/A0	
PN	DTM	B405/A9	
PN	CM	C504/A0	
PN	CM	C507/A9	
PN	CM	D607/A9	
PNA	DTM	B402/A0	
PNA	DTM	B405/B9	
PNA	CM	C504/A0	
PNA	CM	C507/B9	
PNA	CM	D607/A9	
PRL	MTC	B608/E1	
PRT	JLK	B611/A5	
PRT FG	JLK	B611/E6	
PRTC	JLK	B609/F5	
PTR	MTC	B608/E1	
R-S-TOA	JLK	B513/C8	
RA1	MTC	B206/A0	
RA1-9	MTC	C516/D1-F1	
RB	AMRST	D116/A6	
RBT1	MTC	C516/E8	
RB1,2	CM	C119/A9	
RCY	MTC	B206/B0	
RCY	MTC	C516/A1	
RP	MTC	D628/A0	
RS	CM	C119/B9	
S	CM	C207/D2	
S	T TERM	C824/A8	
SA	CM	C207/D2	
SAM	CM	C207/D3	
SB	MTC	C516/A7	
SBM	CM	C207/D3	
SCM	CM	C207/D2	
SD	MTC	B607/D8	
SG	JLK	B609/E5	
SH	CM	C206/H3	
SKA	CM	C205/F4	
SKB	CM	C205/D4	
SLCK	CM	D425/B1	
SLK	MTC	D426/G2	
SM	IR	D106/G6	
SMB	CM	C206/G1	

* FOR EXPLANATION OF EQPT LOC; REFER TO SHEET NOTE 1 ON SHEET A701.

APPARATUS INDEX

DWG SIZE	ISSUE
C2	5

BELL LABORATORIES | SFD-10-01 | A311

PRINTED IN U.S.A.

LAMPS

DESIG	CKT	LOC	EQPT LOC *
SP	MTC	B422/E7	
SP	CM	D804/E4	
SP	MTC	D804/F0	
STP	MTC	C410/G1	
STP	MTC	D508/G1	
TA	MISC	B110/B8	
TA	MISC	C106/B8	
TA	MISC	D206/B8	
TB	MTC	B206/A0	
TB	DTM	B209/G5	
TB	CM	C309/F5	
TB	MTC	C516/C7	
TBS	CM	D410/D2	
TBS0-4	DTM	B204/C3	
TBS0-4	CM	C306/B2	
TBS0-4	CM	D304/B3	
TCT	MTC	C530/B1	
TCT	MTC	D622/B1	
TC1	MTC	B104/C1	
TFS	DTM	B204/H6	
TFS	CM	C306/F0	
TFS	CM	D304/F0	
THB	CM	D421/E0	
TLC	JLK	B204/A0	
TLH	MTC	B423/H4	
TLH	MTC	C533/G8	
TLH	MTC	D625/G8	
TN	OR	B503/A7	
TO	JLK	B513/E8	
TO	JLK	C207/H3	
TO	JLK	C615/D8	
TO	OS	C624/G3	
TO	JLK	D114/H5	
TP	MTC	D628/B0	
TRL	MTC	B106/C0	
TRL	MTC	C107/B0	
TRL	MTC	D207/A0	
TRR	JLK	B611/A4	
TRR	JLK	C156/G0	
TRT	MISC	B110/C8	
TRT	MISC	B611/F5	
TRT	MISC	C106/C8	
TRT	MISC	D206/C8	
TSK	MTC	B209/A5	
TSK	MTC	C309/A5	
TSM	DTM	B417/H6	
TSM	CM	C311/G2	
TSM	CM	C527/H7	
TSM	CM	D307/G2	
TSM	CM	D619/H6	
TT	MTC	B209/D0	
TT	MTC	C309/D0	
TTB	CM	D421/A0	
TXP	DTM	B423/F7	
TXP	DTM	B424/C6	
TXP	CM	C533/F7	
TXP	CM	D625/F7	
TXP1	DTM	B423/F7	
TXP1	DTM	B424/C6	
TXP1	CM	C533/F8	
TXP1	CM	D625/F8	
UBS	CM	D413/D1	
VGA	DTM	B107/C4	
VGB	DTM	B304/H5	
VGB	DTM	B305/H5	
VGB	CM	C406/G3	
VGB	CM	C407/H4	
VGB	CM	C409/C7	
VGB	CM	C411/C1	
VGB	CM	D507/C7	
VGB	CM	D509/C1	
VGB	CM	D510/G3	
VGB	CM	D511/H4	
WF	CM	D414/D1	
WG	CM	D414/C1	
WL	CM	D414/B1	
X	AMRST	C517/F8	

DESIG	CKT	LOC	EQPT LOC *
XTSK	MTC	B209/A5	
XTSK	MTC	C309/A5	
1+	MTC	D628/F0	
1-5	MTC	D628/C0-E0	
2+	MTC	D628/C0,F0	
3+	MTC	D628/C0	

SWITCHES

DESIG	CKT	LOC	EQPT LOC *
A	MTC	B603/A8	
A	MTC	C115/A1	
A	MTC	C145/G0	
A	MTC	D212/B1	
A	MTC	D218/G0	
B	MTC	B603/B8	
B	MTC	C115/B1	
B	MTC	C145/G1	
B	MTC	D212/B1	
B	MTC	D218/G1	
C	MTC	B603/C8	
C	MTC	C115/B1	
C	MTC	C145/G2	
C	MTC	D212/C1	
C	MTC	D218/G2	
CH	MTC	B412/D1,D2	
CH	MTC	C522/C2,D1	
CH	MTC	D614/D1,C2	
CL	MTC	C110/B2	
CRU	MTC	B304/D2,G1	
CRU	MTC	B305/D2,G1	
CRU	MTC	C113/D1	
CRU	MTC	C406/D1	
CRU	MTC	C407/E1	
CRU	MTC	D510/D1	
CRU	MTC	D511/E1	
CST	MTC	B304/B2,F1	
CST	MTC	B305/B2,F1	
CST	MTC	C113/A1	
CST	MTC	C406/B1	
CST	MTC	C407/C1	
CST	MTC	D510/B1	
CST	MTC	D511/C1	
CSU	MTC	B304/C2,E1	
CSU	MTC	B305/C2,F1	
CSU	MTC	C113/B1	
CSU	MTC	C406/C1	
CSU	MTC	C407/D1	
CSU	MTC	D510/C1	
CSU	MTC	D511/D1	
D	MTC	C115/C1	
D	MTC	C145/G3	
D	MTC	D212/D1	
D	MTC	D218/G3	
D	CM	D424/D8	
D	MTC	D426/D5	
E	MTC	C115/C1	
E	MTC	C145/G4	
E	MTC	D212/D1	
E	MTC	D218/G4	
F	MTC	C115/D1	
F	MTC	C145/G4	
F	MTC	D212/E1	
F	MTC	D218/G4	
FS	MTC	B202/F1	
FS	MTC	C304/F0	
FS	MTC	C306/F9	
FS	MTC	D211/D4,F4	
FS	MTC	D304/E9,F9	
FT	MTC	B107/A0	
FT	MTC	C114/B1	
FT	MTC	C410/G8	
FT	MTC	D416/A5	
FT	MTC	D508/G8	
FU	MTC	B107/A0	
FU	MTC	C114/C1	
FU	MTC	C410/G5	
FU	MTC	D416/B5	
FU	MTC	D508/F5	
G	MTC	C115/D1	
G	MTC	C145/G5	
G	MTC	D212/E1	
G	MTC	D218/G5	
H	MTC	C115/E1	
H	MTC	C145/G6	
H	MTC	D212/F1	
H	MTC	D218/G6	

DESIG	CKT	LOC	EQPT LOC *
HG	MTC	B107/D0	
HG	MTC	C114/E1	
HG	MTC	D416/E5	
HG	MTC	D624/G6	
IC	MTC	D208/B2,F2	
IC	MTC	D208/E0	
ICL	MTC	D208/G2	
IRG	AMRST	D116/D7-G7	
IRG	AMRST	D117/D3	
IRG	AMRST	D117/G5	
ITC-RW	MTC	C216/B9	
ITC-RW	MTC	D306/E1	
J	MTC	C115/E1	
J	MTC	C145/G7	
J	MTC	D212/F1	
J	MTC	D218/G7	
JSQ	MTC	B405/B2	
JSQ	MTC	B405/H2	
JSQ	MTC	C507/A2	
JSQ	MTC	C507/H1	
JSQ	MTC	D607/A2-E2,H0	
K	MTC	C115/F1	
K	MTC	C145/G7	
K	MTC	D212/G1	
K	MTC	D218/G7	
L	MTC	C115/F1	
L	MTC	C145/G8	
L	MTC	D212/G1	
L	MTC	D218/G8	
M	MTC	C145/G9	
M	MTC	D218/F9	
MB	IAO	C304/A1	
MB	IAO	C309/F9	
NTC	NTC	D808/A2	
ORG	MTC	C111/B2	
OS	MTC	C206/C3	
RA	MTC	B206/D0,F4,G5	
RA	MTC	C516/C5,D7,E7	
RAU	MTC	B206/D0,G5	
RAU	MTC	C516/C5,E7	
RCU	MTC	D415/A1,B1	
RG	MTC	B105/A3,C3	
RG	MTC	C111/B2	
S	CM	D424/F8	
S	MTC	D808/D8,E8	
SRS	AMRST	D116/A3,C3	
SRS	AMRST	D117/A1,2	
TBS	MTC	D410/F1	
TRNA	MTC	B603/C8	
TRNA	MTC	C110/D2	
TRNA	MTC	D208/E2	
TRNB	MTC	B603/D8	
TRNB	MTC	D208/D2	
TRNB	MTC	D306/E1	
TSTB	MTC	B422/A8	
TSTB	MTC	C532/A8	
TSTB	MTC	D624/A7	
TSU	MTC	B209/C0,E0	
TSU	MTC	C309/B0-E0	
VF	MTC	B107/F0	
VF	MTC	C114/D1	
VF	MTC	D416/F5	
VG	MTC	B107/B0	
VGU	MTC	C114/F1,G1	
VGU	MTC	D416/D5	

HOLD MAGNETS

DESIG	CKT	LOC	EQPT LOC *
ENTC	MTC	B431/F0	
ENTC	MTC	C537/F0	
ENTC	MTC	D631/F0-F5	
HOLD-	RSW	D629/A9	
HOLD-	RSW	D706/B7	
J0-9	TL	B418/B5	
J0-9	TL	B419/A5	
J0-9	LL	B419/C2	
J0-9	LL	B423/B4	
J0-9	TL	B423/B6	
J0-9	LL	B503/C3	
J0-9	TL	B503/C4	
J0-9	TL	C528/B3	
J0-9	TL	C529/B3	
J0-9	LL	C529/C2	
J0-9	LL	C533/B4	
J0-9	TL	C533/B6	
J0-9	TL	C616/C4	
J0-9	LL	C616/D3	
J0-9	TL	C617/D6	
J0-9	LL	C617/E7	
J0-9	TL	C626/C4	
J0-9	LL	C626/D3	
J0-9	TL	C627/D6	
J0-9	LL	C627/E6	
J0-9	TL	D110/C4	
J0-9	LL	D110/D3	
J0-9	TL	D111/C6	
J0-9	LL	D111/D6	
J0-9	LL	D124/C2	
J0-9	TL	D124/C3	
J0-9	TL	D125/D6	
J0-9	LL	D125/E7	
J0-9	TL	D127/C6	
J0-9	LL	D127/D6	
J0-9	TL	D620/E3-E5	
J0-9	TL	D621/B4,B5	
J0-9	LL	D521/C2	
J0-9	LL	D625/A4	
J0-9	TL	D625/A6	
J0-9	LL	D808/A4	
J0-9	TL	D808/A5	
L0-4	LL	B419/C0	
L0-4	LL	B423/B2,B3	
L0-4	LL	B503/C2	
L0-4	LL	C529/C0	
L0-4	LL	C533/A2,A3	
L0-4	LL	C616/D3	
L0-4	LL	C617/E7	
L0-4	LL	C626/D3	
L0-4	LL	C627/E7	
L0-4	LL	D110/D3	
L0-4	LL	D111/D7	
L0-4	LL	D124/C2	
L0-4	LL	D125/E7	
L0-4	LL	D127/D7	
L0-4	LL	D424/A8	
L0-4	LL	D426/A0	
L0-4	LL	D621/C0	
L0-4	LL	D625/A2,A3	
L0-4	LL	D706/H8	
L0-4	LL	D806/A1	
L0-4	LL	D808/A3	
L00-19	IRL	D104/A2-A4	
L00-19	IRL	D127/H4-H6	
NT	LL	B423/B3	
NT	LL	B431/B8	
NT	LL	C533/B1	
NT	LL	C537/B9	
NT	LL	D625/A1	
NT	LL	D631/B8-F8	
NT	LL	D808/A3	
NTC	NTC	B431/C0	
NTC	NTC	C533/B0	
NTC	NTC	C537/C0	
NTC	NTC	D625/B0	
NTC	NTC	D631/C0-C5	

* FOR EXPLANATION OF EQPT LOC; REFER TO SHEET NOTE 1 ON SHEET A701.

ISSUE	DWG SIZE	APPARATUS INDEX
5	C2	
A312	SFD-10-01	BELL LABORATORIES

PRINTED IN U.S.A.

HOLD MAGNETS				SELECT MAGNETS															
DESIG	CKT	LOC	EQPT LOC *	DESIG	CKT	LOC	EQPT LOC *	DESIG	CKT	LOC	EQPT LOC *	DESIG	CKT	LOC	EQPT LOC *	DESIG	CKT	LOC	EQPT LOC *
NTC	NTC	D808/B2		ENTC	NTC	B431/E0													
SMO-9	OSL	C206/E8		ENTC	NTC	C537/E0,F0													
SMO-9	OSL	C213/D2-D4		ENTC	NTC	D631/E0													
SL20-39	IRL	D104/A5-A7		JA	TL	B418/A2													
TO-9	TL	B418/B7		JA	TL	C528/A1													
TO-9	TL	B419/C7		JA	TL	D620/A1													
TO-9	TL	B423/B7		JB	TL	B418/A2													
TO-9	TL	B503/C4		JB	TL	C528/A1													
TO-9	TL	C528/C6		JB	TL	D620/A1													
TO-9	TL	C529/C6		JO-9	ALL	B416/A7													
TO-9	TL	C533/B8		JO-9	TL	B417/A0													
TO-9	TL	C616/D4		JO-9	TL	B418/B2,C2													
TO-9	TL	C617/D6		JO-9	ALL	C526/A7													
TO-9	TL	C626/D4		JO-9	TL	C527/A0													
TO-9	TL	C627/D6		JO-9	TL	C528/B1													
TO-9	TL	D110/D4		JO-9	ALL	D618/F7													
TO-9	TL	D111/C6		JO-9	TL	D619/F0-F4													
TO-9	TL	D124/C3		JO-9	TL	D620/B1													
TO-9	TL	D125/D6		LJO-9	LL	B416/A4													
TO-9	TL	D127/C6		LJO-9	LL	C526/A4													
TO-9	TL	D620/E6		LJO-9	LL	D618/F4													
TO-9	TL	D621/C7		LO-9	LL	B416/A1													
TO-9	TL	D625/A8		LO-9	LL	C526/A1													
TO-9	TL	D808/A6		LO-9	LL	D618/F1													
				NTC	NTC	B423/B1													
				NTC	NTC	B431/B0													
				NTC	NTC	C537/B0,C0													
				NTC	NTC	D631/B0													
				NTC	NTC	D808/B2													
				SMO-9	RSW	D628/A9-G9													
				SSO-9	OSL	C206/D8													
				SSO-9	IRL	D104/B8													
				SO-9	IRL	D104/B4													
				TA	TL	C311/F8													
				TA	TL	D307/G8													
				TB	TL	C311/H8													
				TB	TL	D307/H8													
				TO-9	TL	B417/A6													
				TO-9	TL	C311/G7-H8													
				TO-9	TL	C527/A6													
				TO-9	TL	D307/G7-H8													
				TO-9	TL	D619/F6													

* FOR EXPLANATION OF EQPT LOC; REFER TO SHEET NOTE 1 ON SHEET A301.

APPARATUS INDEX	DWG SIZE C2	ISSUE 5
BELL LABORATORIES	SFD-10-01	A313

DESIG	LOCATION	FROM CIRCUIT	TO/FROM CIRCUIT OR LOCATION					
+	B112/H3	BC	LLDC					
+130	B110/A8	MISC	DTM					
+130	B611/H7	PRT	MISC					
+130	C106/A8	CM	MISC					
+130	D206/A8	CM	MISC					
+130(E)	C137/G4	PRTD	CM					
+130(E)	D215/G4	PRTD	CM					
-	B112/H3	BC	LLDC					
-48	B611/G7	PRT	MISC					
A	D418/D9	CM	MTFC					
A'0,1,2,4,7	C208/B5	CM	MTFC					
A'0,1,2,4,7	D213/B5	CM	MTFC					
AA	D408/H0	PCMB	NG					
AB	B112/C6	LLDC	LL					
AB	B112/H8	DTM/CM	AMB					
AB	C213/C5,G5	OS	OSL	OGT/IAOT				
AB	D408/G0	PCMB	NG					
AC	B112/D6	LLDC	LL					
AC	C614/F8	AMRST	MTC					
AC-DC	B425/D9	DTM	PRTD					
AC-DC	C535/C9	PRTD	DTM/CM	JLK				
AC-DC	D627/C9	PRTD	DTM/CM	JLK				
AD	C216/F4	MTFC	CM	OSC	OS			
AD'	C216/G4	MTFC	CM					
AK	D418/D5	NG	NGC	CM	MTFC			
ALA	C142/A6	JLK	MTC					
ALA	D134/A6	JLK	MTRC					
ALB	C142/C6	JLK	MTC					
ALB	D134/C6	JLK	MTRC					
ALC	B418/F9	TL	TLC	DTM				
ALC	B419/F9	TL	TLC	DTM				
ALC	B421/C3	DTM	TLC	TL				
ALC	C311/A6	CM	TLC	TL				
ALC	C528/F9	TL	TLC	CM				
ALC	C529/F9	TL	TLC	CM				
ALC	D307/A6	CM	TLC	TL				
ALC	D620/F9	CM	TLC	TL				
ALC	D621/F9	TL	TLC	CM				
ALM	B513/E8	OR	JLK					
ALM	C615/D7	OS	JLK					
ALM	C624/G3	OS	JLK					
ALM	D114/H5	IR	JLK					
AMA	C211/H6	MTFC	CM	OSC	OS			
AMB	B110/E6	DTM	JLK					
AMB	C106/E6	CM	JLK					
AMB	D206/E6	CM	JLK					
AN	D423/F8	CM	MTFC					
ANK	D420/D6	CM	NGC	NG				
AN0-4	D421/C5	CM	NG					
AR	B110/C8	DTM	MISC					
AR	B611/H6	MISC	PRT					
AR	C106/C8	CM	MISC					
AR	D206/C8	CM	MISC					
ART	B425/C6	TL	TLC	DTM				
ART	C535/C5	CM	TLC	TL				
AR0,1,2,4,7	C610/A1	CM	OSC	OS				
AR0,1,2,4,7	C620/A1	CM	OSC	OS				
ASB	C207/E2	MTC	CM					
ASM	B417/G7	TL	TLC	DTM				
ASM	C311/G6	CM	TLC	TL				
ASM	C527/G7	CM	TLC	TL				
ASM	D307/G6	CM	TLC	TL				
ASM	D619/H7	CM	TLC	TL				
AST	B423/C8	DTM	TLC	TL				
AST	C533/B9	TL	TLC	CM				
AST	D625/B9	TL	TLC	CM				
ATT	B425/C5	TL	TLC	DTM				
ATT	C310/G9	TL	MTC					
ATT	C535/C5	CM	TLC	TL				
ATT1	C31./G7	APTT	TL					
AV	C206/G6	CM	OSC	OS				
AVK1	C207/E8	CM	MTFC					
A0-11	C207/F5	CM	OSGR					
A0-11	C615/G4	CM	OSGR					
A0-11	C624/G6	CM	OSGR					
A0,1,2,4,7	B603/B5	OR	PRTC	PRT	MTFC	MTC		
A0,1,2,4,7	C115/A2	MTC	MTFC	CM	ORMC	OR		

DESIG	LOCATION	FROM CIRCUIT	TO/FROM CIRCUIT OR LOCATION					
A0,1,2,4,7	C145/A0	CM	MTFC	MTC	AMRST			
A0,1,2,4,7	C150/D8	AMRST	MTFC					
A0,1,2,4,7	C152/B3	AMRST	MTFC	CM	ORMC	OR		
A0,1,2,4,7	C208/B0	CM	OSC	OS				
A0,1,2,4 7	C610/A3	CM	OSC	OS				
A0,1,2,4,7	C620/A3	CM	OSC	OS				
A0,1,2,4,7	D212/B2	MTC	MTFC	CM	IRMC	IR		
A0,1,2,4,7	D213/B0	CM	OSC	OS				
A0,1,2,4,7	D218/A0	CM	MTFC	MTC	AMRST			
A4,7	C704/E1,F1	MTFC	CM	ORMC	OR			
B	B110/C8	DTM	MISC					
B	B112/A6	LLDC	LL					
B	B512/G6	OR	DTTDC					
B	B611/G6	MISC	PRT					
B	C106/C8	CM	MISC					
B	D106/G1	IR	IRL					
B	D107/G1	IR	IRL					
B	D117/G2	AMRST	IRL					
B	D206/C8	CM	MISC					
B	D629/A9	IT	RSW					
B	D706/C7	RSW	IT					
B	D709/C2	TRC	PRF					
B	D805/D1	RSW	IT					
B'0,1,2,4,7	C208/C5	CM	MTFC					
B'0,1,2,4,7	D213/C5	CM	MTFC					
BA	B112/H6	LLDC	AMB					
BAT	B508/A5	OR	TTR					
BAT 1,2	D112/D9	SR	D113/D0	IR				
BL	D104/C0	IRL	IT					
BL	D104/G1	IRL	AMRST					
BL	D106/G1	IR	IRL					
BL	D107/G1	IR	IRL					
BL	D109/D8	IR	IRL	IT				
BL	D123/D8	IR	IRL	IT				
BL	C126/E9	IR	D127/F0	IRL	AMRST/IT			
BLC	C311/B1	MTC	MTFC	CM	TLC	TL		
BLC	C528/F9	TL	TLC	CM	MTFC	MTC		
BLC	C529/F9	TL	TLC	CM	MTFC	MTC		
BLC	D307/B1	MTC	MTFC	CM	TLC	TL		
BLC	D620/F9	TL	TLC	CM	MTFC	MTC		
BLC	D621/F9	TL	TLC	CM	MTFC	MTC		
BLG	D126/F8	AMRST	IR	D127/G0	IRL			
BN	D419/E0	CM	MTFC					
BNK	D411/C8	CM	NGC	NG				
BRT	C535/C5	CM	TLC	TL				
BR0,1,2,4,7	C610/A2	CM	OSC	OS				
BR0,1,2,4,7	C620/A2	CM	OSC	OS				
BS	B107/F6	DTM	LLC	LL				
BS	B430/D4	AMRST	OR					
BS	C409/B3	LL	LLC	CM				
BS	D507/B3	LL	LLC	CM				
BSM	B417/G8	TL	TLC	CM				
BSM	C311/H6	CM	TLC	TL				
BSM	C527/G8	CM	TLC	TL				
BSM	D307/H6	CM	TLC	TL				
BSM	D619/H8	CM	TLC	TL				
BSR	B609/E4	PRTC	JLK					
BST	C533/B9	TL	TLC	CM				
BST	D625/B9	TL	TLC	CM	MTFC	MTC		
BS0-4	B204/B1-B3	DTM	TLC					
BS0-4	C306/B1,B2	CM	TLC					
BS0-4	D304/B1,B2	CM	TLC					
BS0,1	B302/A7-G7	DTM/CM	LLC					
BS0,1	C404/A7-G7	DTM/CM	LLC					
BS0,1	D504/A7-G7	DTM/CM	LLC					
BS1-4	D408/A2,B2	CM	NGC					
BT	B106/B1	MTC	MTFC	DTM	LLMC			
BT	B209/D9	TL	OR					
BT	C107/C2	MTC	MTFC	CM	ORMC	OR/PC		
BT	C309/D9,F9	TL	OGT/IAOT					
BT	D131/C5	IR	IRMC	CM	MTFC			
BT	D207/C2	MTC	MTFC	CM	IRMC	IR/PC		
BTT	C535/C5	CM	TLC	TL				
BT0-9	B209/C6	DTM	TLC	TL				
BT00-19	C309/C6	CM	TLC	T-L				
BY	D630/B2	CM	MTFC					
BY	D806/F7	CM	MTFC					

DESIG	LOCATION	FROM CIRCUIT	TO/FROM CIRCUIT OR LOCATION					
B0,1,2,4,7	B603/B5	OR	PRTC	PRT	MTFC	MTC		
B0,1,2,4,7	C115/B2	MTC	MTFC	CM	ORMC	OR		
B0,1,2,4,7	C145/A1	CM	MTFC	MTC	AMRST			
B0,1,2,4,7	C151/C1	AMRST	MTFC					
B0,1,2,4,7	C152/D3	AMRST	MTFC	CM	ORMC	OR		
B0,1,2,4,7	C208/C0	CM	OSC	OS				
B0,1,2,4,7	C610/A3	CM	OSC	OS				
B0,1,2,4,7	C620/A3	CM	OSC	OS				
B0,1,2,4,7	D212/B2	MTC	MTFC	CM	IRMC	IR		
B0,1,2,4,7	D213/C0	CM	OSC	OS				
B0,1,2,4,7	D218/A1	CM	MTFC	MTC	AMRST			
B1,2	C309/C9	JLK	OGT					
B1,2	C616/D7	OGT	MDF	JLK				
B1,2	C626/D7	OGT	MDF	JLK				
B1,2	D110/D7	OGT	MDF	JLK				
B1,2	D124/C6	OGT	MDF	OGT JK				
C	B106/F9	LL	JLK					
C	B112/E6	LLDC	LL					
C	B512/E6	OR	DTTDC					
C	B609/F4	PRTC	JLK					
C	C106/E8	JLK	PC					
C	D206/F8	JLK	PC					
C'0,1,2,4,7	C208/C5	CM	MTFC					
C'0,1,2,4,7	D213/C5	CM	MTFC					
CB	B103/A1,E1	LLMC	PC					
CB	B103/G3-G9	DTM	PC	JLK				
CB	B605/G3	PRT	PRTC	JLK				
CB	C105/A1,E1	ORMC/IRMC	PC					
CB	C105/G3-G9	CM	PC	JLK				
CB	D205/A1,E1	ORMC/IRMC	PC					
CB	D205/G3-G9	CM	PC	JLK				
CBS	C104/A1,E1	OR/IR	ORMC/IRMC					
CBS	D204/A1,E1	OR/IR	ORMC/IRMC					
CB1	B103/A1	LLMC	PC					
CB1	C105/A1,E1	ORMC/IRMC	PC					
CB1	D205/B1,E1	ORMC/IRMC	PC					
CCT	B425/G6	DTM	JLK					
CCT	C530/D2	MTFC	CM					
CCT	C535/F8	JLK	CM					
CCT	D622/D2	CM	JLK					
CCT	D627/F8	CM	JLK					
CGA	B304/E4	MTC	DTM	LLC	LL			
CGA	B305/E4	MTC	DTM	LLC	LL			
CGA	B429/C4	MTFC	DTM	TLC	ORLM			
CGA	C113/E2	MTC	MTFC	CM	ORMC	OR		
CGA	C406/E2	MTC	CM	LLC	LL			
CGA	C407/E2	MTC	CM	LLC	LL			
CGA	D510/E2	MTC	CM	LLC	LL			
CGA	D511/E2	MTC	CM	LLC	LL			
CGA1	B304/E4	MTC	DTM					
CGA1	B305/E3	MTC	DTM					
CGB	B304/F4	MTC	DTM	LLC	LL			
CGB	B305/G4	MTC	DTM	LLC	LL			
CGB	B429/C4	MTFC	DTM	TLC	ORLM			
CGB	C113/F2	MTC	MTFC	CM	ORMC	OR		
CGB	C406/F2	MTC	CM	LLC	LL			
CGB	C407/E2	MTC	CM	LLC	LL			
CGB	D510/F2	MTC	CM	LLC	LL			
CGB	D511/E2	MTC	CM	LLC	LL			
CGB1	B304/F4	MTC	DTM					
CGB1	B305/F3	MTC	DTM					
CGT	C530/B2	MTFC	CM	JLK				
CGT	D622/C2	CM	MTFC					
CGT	D622/E2	CM	JLK					
CGT	D804/D4	CM	MTFC					
CGTL	B112/G0	JLK	LLDC					
CGTR	B112/G0	JLK	LLDC					
CHA	C525/E4	CM	MTFC					
CHA	D617/E4	CM	MTFC					
CH0-9	B415/E7-H7	MTFC	DTM					
CH0-9	C525/E4-E7	CM	MTFC					
CH0-9	D617/E4-E7	CM	MTFC					
CH0-9	D809/C9-G9	CM	MTFC					
CI	C149/F6	AMRST	MTFC					
CI	C607/B7	MTFC	CM					
CI	D709/B7	CM	MTFC					
CK	B204/D4	MTFC	DTM	PCMB				

LEAD INDEX

DWG SIZE	ISSUE
C2	5

BELL LABORATORIES | SFD-10-01 | A401

PRINTED IN U.S.A.

DESIG	LOCATION	FROM CIRCUIT	TO/FROM CIRCUIT OR LOCATION					
CK	C306/A6,B6	DTM	PC					
CK	C306/B4	MTFC	CM	PCMB				
CK	D304/B4	MTFC	CM	PCMB				
CKG	B104/C3	MTFC	DTM	LLMC				
CKG	B502/B5,A9	MTFC	DTM	LLMC				
CKG	C108/G1	MTFC	CM	ORMC				
CKG	D210/G1	MTFC	CM	IRMC				
CKG	D705/D9	CM	IRMC					
CKG1	C108/F1	MTC	MTFC	CM				
CKG1	D210/G1	MTC	MTFC	CM				
CKG1	D705/D9	CM	MTFC	MTC				
CKG2	B104/B2	MTC	MTFC	DTM				
CKG2	B502/A4	MTC	MTFC	DTM				
CKO	D419/C8	CM	MTFC					
CKR	D419/F8	CM	MTFC					
CLG	C312/B0	CM	MTFC					
CLK	C312/E0	CM	MTFC					
CLPTL	B112/G1	JLK	LLDC					
CLPTR	B112/G2	JLK	LLDC					
CLT1,2	C312/A0,C0	CM	MTFC					
CLO-10	D108/C5	IRL	IR					
CLO-10	D122/C5	IRL	IR					
CLO-10	D804/A4	IR	IRL					
CL1-8	C210/D7-H7	MTFC	CM	OSC	OS			
CMA	B607/E6	OR	PRTC	PRT	MTFC	MTC		
CMB	B607/F6	OR	PRTC	PRT	MTFC	MTC		
CMC	B607/G6	OR	PRTC	PRT	MTFC	MTC		
CM3	B607/D6	OR	PRTC	PRT	MTFC	MTC		
CN	B106/D2	MTFC	DTM	LLMC				
CN	B429/G4	MTFC	DTM	TLC	TL	OR		
CN	B511/D3	OR	TL	TLC	DTM	MTFC		
CN	B604/B7	PRTC	MTFC					
CN	C106/G7	PC	ORMC	OR	AMRST			
CN	C106/H8	PC	OR	AMRST				
CN	C156/C5	AMRST	OR	ORMC	MTFC			
CN	C207/A6	AMRST	OS	OSC	MTFC			
CN	C312/D0	MTFC	CM	TLC	TL	OGT		
CNG	B106/D2	MTFC	DTM	LLMC				
CNG	C106/F5	MTFC	ORMC					
CNG	C207/A8	OSC	MTFC					
CNG-	B604/A7	PRTC	MTFC					
CNR	C112/F2	MTC	MTFC	CM	ORMC	OR		
CNS	C132/E9	CM	MTFC					
CNO-3	C106/H5	MTFC	PC					
CNO-3	D206/G5	MTFC	PC	IR	AMRST			
CO	D116/D0	IR	IRL	AMRST				
CON	B425/H4	DTM	MTFC					
CON	C530/C2	MTC	MTFC	CM				
CON	D622/C2	CM	MTFC	MTC				
CON	D804/D4	CM	MTFC					
CPO,1,2,4,7	C212/A7-D7	MTFC	CM	OSC	OS			
CR	C112/E2	MTC	MTFC	CM	ORMC	OR		
CRUO,1,2,4,7	B429/A4,B4	MTFC	DTM	TLC	ORLM			
CRUO,1,2,4,7	C113/D2	MTC	MTFC	CM	ORMC	OR		
CRO,1,2,4,7	C210/A7-D7	MTFC	CM	OSC	OS			
CRO,1,2,4,7	C610/A2	CM	OSC	OS				
CRO,1,2,4,7	C620/A2	CM	OSC	OS				
CSG1,2	B304/A4	MTC	MTFC	DTM				
CSG1,2	B305/A3	MTC	MTFC	DTM				
CSG1,2	C406/A2	MTC	MTFC	CM				
CSG1,2	C407/A2	MTC	MTFC	CM				
CSG1,2	D510/A2	MTC	MTFC	CM				
CSG1,2	D511/A2	MTC	MTFC	CM				
CSO-29	B304/B4	MTC	MTFC	DTM	LLC	LL		
CSO-29	B305/C3	MTC	MTFC	DTM	LLC	LL		
CSO-29	B427/A2,B2	LL	LLC	DTM	MTFC			
CSO-29	C406/B2,C2	MTC	MTFC	CM	LLC	LL		
CSO-29	C407/C2,D2	MTC	MTFC	CM	LLC	LL		
CSO-29	D510/B2,C2	MTC	MTFC	CM	LLC	LL		
CSO-29	D511/C2,D2	MTC	MTFC	CM	LLC	LL		
CTAO,1,2,4,7	C113/A2	MTC	MTFC	CM	ORMC	OR		
CTM	B611/C1	PRTC	PRT					
CTO-2	B304/D5	MTFC	DTM					
CTO-2	B427/A5,B5	MTFC	DTM	TLC	ORLM			
CTO,1,2,4,7	B429/D4-F4	MTFC	DTM	TLC	ORLM			
CUO,1,2,4,7	B427/F5-H5	MTFC	DTM	TLC	ORLM			
CUO,1,2,4,7	C113/B2	MTC	MTFC	CM	ORMC	OR		

DESIG	LOCATION	FROM CIRCUIT	TO/FROM CIRCUIT OR LOCATION					
CWA	C108/B8	MTRC	PC					
CWA	C142/D3	PC	MTC					
CWA	D134/D3	PC	MTRC					
CWA	D210/B8	MTRC	PC					
CWB	C108/B8	MTRC	PC					
CWB	C142/F3	PC	MTC					
CWB	D134/F3	PC	MTRC					
CWB	D210/B8	MTRC	PC					
CO,1,2,4,7	B603/C5	OR	PRTC	PRT	MTFC	MTC		
CO,1,2,4,7	C115/B2	MTC	MTFC	CM	ORMC	OR		
CO,1,2,4,7	C145/A2	CM	MTFC	MTC	AMRST			
CO,1,2,4,7	C151/C2	AMRST	MTFC					
CO,1,2,4,7	C152/E3	AMRST	MTFC	CM	ORMC	OR		
CO,1,2,4,7	C208/C0	CM	OSC	OS				
CO,1,2,4,7	C610/A3	CM	OSC	OS				
CO,1,2,4,7	C620/A3	CM	OSC	OS				
CO,1,2,4,7	D212/C2	MTC	MTFC	CM	IRMC	IR		
CO,1,2,4,7	D213/C0	CM	OSC	OS				
CO,1,2,4,7	D218/A2	CM	MTFC	MTC	AMRST			
D	B105/C4	MTC	MTFC	DTM				
D	C111/B4	MTC	MTFC	CM	ORMC	OR		
D	C213/D5,G5	OS	OSL	OGT/IAOT				
D	D131/B2	IR	IRL	IT				
D'0,1,2,4,7	C208/D5	CM	MTFC					
D'0,1,2,4,7	D213/D5	CM	MTFC					
DCK	D114/B5	IR	IRMC	CM	MTFC	MTC		
DCK	D131/E9	MTFC	CM	IRMC	IR			
DCT	B502/G4	MTC	MTFC	DTM				
DCT	C604/D2	CM	MTFC	MTC	TT			
DCT	D704/D2	CM	MTFC	MTC	TT			
DCT1	B502/G5	MTFC	DTM					
DCT1	C604/D9	CM	MTFC					
DCT1	D704/D9	CM	MTFC					
DIS	B502/C4	MTC	MTFC	DTM				
DIS	C517/E6	AMRST	CM					
DIS	C605/D8	CM	MTFC	MTC				
DIS	D705/D8	CM	MTFC	MTC				
DIS1	B502/D4	MTC	MTFC	DTM				
DIS1	C605/D6	CM	MTFC	MTC				
DIS1	D705/D6	CM	MTFC	MTC				
DL	B611/B6	JLK	PRT					
DL	C607/F7	JLK	CM					
DL	D709/F8	CM	JLK					
DLB	B611/E4	PRT	JLK					
DLB	C607/F7	JLK	CM					
DLB	D709/F8	CM	JLK					
DL1-6	C211/E6,F6	MTFC	CM	OSC	OS			
DOR	B430/G4	AMRST	MTC					
DPG	C627/G4	IRL	IR					
DPG	D126/F8	AMRST	IR	D127/G0	IRL			
DR	C129/F9	CM	MTFC					
DRTO,1	B110/H2	PRF	MTFC					
DRTO,1	C106/H2	PRF	MTFC					
DRTO,1	C149/D6,E6	AMRST	MTFC					
DRTO,1	D206/H2	PRF	MTFC					
DRO-9	B110/G2	PRF	MTFC					
DRO-9	C106/G2	PRF	MTFC					
DRO-9	C149/F6	AMRST	MTFC					
DRO-9	D206/G2	PRF	MTFC					
DRO,1,2,4,7	B110/G2	PRF	MTFC					
DRO,1,2,4,7	C106/G2	PRF	MTFC					
DRO,1,2,4,7	D206/G2	PRF	MTFC					
DTK	B106/G1	MTC	MTFC	DTM	LLMC	LL		
DTK	B306/E0	MTC	MTFC	CM	LLC	LL		
DTK	B306/E7	MTC	MTFC	DTM	LLMC	LL		
DTK	C408/E0	MTC	MTFC	CM	LLC	LL		
DTK	C408/E7	MTC	MTFC	DTM	LLMC	LL		
DO,1,2,4,7	C115/C2	MTC	MTFC	CM	ORMC	OR		
DO,1,2,4,7	C145/A3	CM	MTFC	MTC	AMRST			
DO,1,2,4,7	C151/C3	AMRST	MTFC					
DO,1,2,4,7	C152/F3	AMRST	MTFC	CM	ORMC	OR		
DO,1,2,4,7	C208/D0	CM	OSC	OS				
DO,1,2,4,7	C610/A4	CM	OSC	OS				
DO,1,2,4,7	C620/A4	CM	OSC	OS				
DO,1,2,4,7	D212/D2	MTC	MTFC	CM	IRMC			
DO,1,2,4,7	D212/D2	MTC	MTFC	CM	OSCIR			
DO,1,2,4,7	D212/D2	MTC	MTFC	CM	OS			

DESIG	LOCATION	FROM CIRCUIT	TO/FROM CIRCUIT OR LOCATION					
DO,1,2,4,7	D218/A3	CM	MTFC	MTC	AMRST			
DZ	C616/G9	MFCS	OS					
DZ	D110/G9	OS	MFCS					
E	B111/G3	DTM	PRTD					
E'0,1,2,4,7	C208/D5	CM	MTFC					
E'0,1,2,4,7	D213/D5	CM	MTFC					
ECN	D207/E2	MTC	MTFC	CM	IRMC			
EF	B410/G3	MTFC	DTM	TLC	TL			
EF	C520/G6	MTFC	CM	TLC	TL			
EF	D612/G6	MTFC	CM	TLC	TL			
EG	D425/H0	MTFC	CM	NGC	NG			
EN	D411/D3	MTFC	CM	NGC	NG			
EN1	D411/B8	CM	NGC	NG				
ETSO,1	B209/E1	MTC	DTM					
ETSO,1	C309/E2	MTC	CM					
EX	C136/G4	JLK	CM	P-REG				
EX	D214/H4	CM	P-REG/JLK					
EXA	C136/G4	CM	JLK					
EXA	D214/G4	CM	JLK					
EXB	C136/A2	MTFC	CM					
EXB	D214/B2	MTFC	CM					
EXG	C136/A2	MTFC	CM					
EXG	D214/A2	MTFC	CM					
EXT	B111/B5	DTM	MTFC	MTC				
EXT	C136/C2	MTC	MTFC	CM				
EXT	D214/C2	MTC	MTFC	CM				
EO,1,2,4,7	C115/C2	MTC	MTFC	CM	ORMC	OR		
EO,1,2,4,7	C145/A3	CM	MTFC	MTC	AMRST			
EO,1,2,4,7	C151/C4	AMRST	MTFC					
EO,1,2,4,7	C152/G3	AMRST	MTFC	CM	ORMC	OR		
EO,1,2,4,7	C208/D0	CM	OSC	OS				
EO,1,2,4,7	C610/A4	CM	OSC	OS				
EO,1,2,4,7	C620/A4	CM	OSC	OS				
EO,1,2,4,7	D212/D2	MTC	MTFC	CM	IRMC			
EO,1,2,4,7	D212/D2	MTC	MTFC	CM	OSCIR			
EO,1,2,4,7	D212/D2	MTC	MTFC	MTC	AMRST			
EO,1,2,4,7	D218/A4	CM	MTFC					
F	B209/D9	OR	TL					
F	C309/E9,F9	TL	OGT/IAOT					
F	D306/A2	MTC	MTFC	CM	IRMC	IRL	IT	
F	D625/F5	CM	MTFC	MTC				
F	D805/A1	IT	IRL	IRMC	CM			
F'0,1,2,4,7	C208/E5	CM	MTFC					
F'0,1,2,4,7	D213/E5	CM	MTFC					
FA	B110/B8	MISC	DTM					
FA	B611/G6	MISC	PRT					
FA	C106/B8	CM	MISC					
FA	C311/B8,C8	TL	OGT/IAOT					
FA	D206/B8	CM	MISC					
FA	D306/A7	TL	IT					
FA-	D625/B9	MTC	TL	TRK				
FA-2	B421/B7	TL	OR					
FAC	C110/C3	MTC	MTFC	CM	ORMC	OR		
FAK	B421/C3	MTFC	DTM	TLC	TL			
FAK	C311/C2	MTFC	CM	TLC	TL			
FAK	D307/C2	MTFC	CM	TLC	TL			
FA1	B110/B8	MISC	DTM					
FA1	B611/F6	MISC	PRT					
FA1	C106/B8	CM	MISC					
FA1	D206/B8	MISC	DTM					
FB	C108/B8	MTRC	PC					
FB	C142/B3	PC	MTC					
FB	D134/B3	PC	MTRC					
FB	D210/B8	MTRC	PC					
FBK	C311/D1	MTC	MTFC	CM	TLC	TL		
FBK	D307/D1	MTC	MTFC	CM	TLC	TL		
FBO-29	B202/C0-C9	DTM	TLC					
FBO-29	C304/C1-C9	CM	TLC					
FB1	C108/C8	MTRC	PC					
FB1	C142/C3	PC	MTC					
FB1	D134/C3	PC	MTRC					
FB1	D210/C8	MTRC	PC					
FCG	B425/E4	MTFC	DTM					
FCG	C535/D4	MTFC	CM					
FCG	D627/D4	CM	MTFC					
FCK	B105/H4	MTFC	DTM					
FCK	B206/D4	MTC	MTFC	DTM				

ISSUE	DWG SIZE	LEAD INDEX
5	C2	

A402 SFD-10-01 BELL LABORATORIES

PRINTED IN U.S.A.

DESIG	LOCATION	FROM CIRCUIT	TO/FROM CIRCUIT OR LOCATION						
FCK	C308/G8	CM	MTFC	MTC					
FG	B110/D7	JLK	DTM	MISC					
FG	B611/F6	JLK	PRT	MISC					
FG	C106/D7	JLK	CM	MISC					
FG	D206/B8	JLK	CM	MISC					
FG0-2	C306/F6	CM	MTFC	MTC					
FG0-2	D109/D5	IRL	IR						
FG0-2	D211/B0,C0	IR	IRMC	CM	MTFC	MTC			
FG0-2	D304/F7	MTC	MTFC	CM	IRMC	IR			
FK	B428/F0	OR	TLC	DTM					
FL	D706/C6	RSW	IT						
FLG	D209/F8	CM	MTFC						
FM	B415/E2	MTFC	DTM						
FM	C517/A1	MTFC	CM						
FM	C525/E2	MTFC	CM						
FM	D617/E2	CM	MTFC						
FML	B205/D8	DTM	MTFC						
FML	C307/D8	CM	MTFC						
FR	B106/E2	MTFC	DTM	LLMC					
FR	B604/A7	PRTC	MTFC						
FR	C106/G7	PC	ORMC	OR	AMRST				
FR	C106/H8	PC	OR	AMRST					
FR	C156/D5	AMRST	OR	ORMC	MTFC				
FR	C207/B6	AMRST	OS	OSC	MTFC				
FRG	B106/E2	MTFC	DTM	LLMC					
FRG	C106/F5	MTFC	ORMC						
FRG	C207/B8	OSC	MTFC						
FRG-	B604/A7	PRTC	MTFC						
FR0-2	C106/H5	MTFC	PC						
FR0-2	D206/G5	MTFC	PC	IR	AMRST				
FS0-29	B203/A1-E9	DTM	MTFC						
FS0-29	C305/A1-E9	CM	MTFC						
FT'0-3	B426/A5	DTM	MTFC						
FT'0-3	C114/B3	MTFC	CM						
FTC	B206/C4	MTC	MTFC	DTM					
FTC	C307/E4	CM	MTFC	MTC					
FTCK	B206/C4	MTC	MTFC	DTM					
FTCK	C307/E4	CM	MTFC	MTC					
FTC0-29	C304/E0-E9	MTC	CM	TL					
FTK1	B107/H3	MTFC	DTM						
FTK1	C403/H6	CM	MTFC						
FTK1	D417/H7	CM	MTFC						
FTT0-5	B114/A5-G5	DTM	MTFC						
FTT0-5	C403/A0,B0	MTC	MTFC	CM					
FTT0-5	D417/A2,B2	CM	MTFC	D416/A0					
FT0-3	B107/A2	MTC	MTFC	DTM	LLMC				
FT0-3	B426/A1	LLMC	DTM	TLC	ORLM				
FT0-3	C114/B2	MTC	MTFC	CM	ORMC				
FT0-3	C114/B2	MTC	MTFC	CM	OSCOR				
FT0-3	C114/B2	MTC	MTFC	CM	OS				
FT0-3	C150/D2	AMRST	MTFC	CM	ORMC	OR			
FT0-5	D414/B7	NG	NGC	CM					
FU'0,1,2,4,7	B426/A5	DTM	MTFC						
FU'0,1,2,4,7	C114/C3	MTFC	CM						
FUT0-9	B114/A1-G1	DTM	MTFC						
FUT0-9	C403/C0	MTC	MTFC	CM					
FUT0-9	D417/C2	CM	MTFC	D416/C0					
FU0-9	D414/C7	NG	NGC	CM					
FU0,1,2,4,7	B107/A2	MTC	MTFC	DTM	LLMC				
FU0,1,2,4,7	B426/A1	LLMC	DTM	TLC	ORLM				
FU0,1,2,4,7	C114/C2	MTC	MTFC	CM	ORMC				
FU0,1,2,4,7	C114/C2	MTC	MTFC	CM	OSCOR				
FU0,1,2,4,7	C114/C2	MTC	MTFC	CM	OS				
FU0,1,2,4,7	C150/E2	AMRST	MTFC	CM	ORMC	OR			
FVD	D208/D3	MTC	MTFC	CM	IRMC	IR			
F0,1,2,4,7	C115/D2	MTC	MTFC	CM	ORMC	OR			
F0,1,2,4,7	C145/A4	CM	MTFC	MTC	AMRST				
F0,1,2,4,7	C151/C6	AMRST	MTFC						
F0,1,2,4,7	C153/A3	AMRST	MTFC	CM	ORMC	OR			
F0,1,2,4,7	C208/E0	CM	OSC	OS					
F0,1,2,4,7	C610/A5	CM	OSC	OS					
F0,1,2,4,7	C620/A5	CM	OSC	OS					
F0,1,2,4,7	D212/E2	MTC	MTFC	CM	IRMC				
F0,1,2,4,7	D212/E2	MTC	MTFC	CM	OSCIR				
F0,1,2,4,7	D212/E2	MTC	MTFC	CM	OS				
F0,1,2,4,7	D218/A4	CM	MTFC	MTC	AMRST				
F1	B513/F7	ORLM	OR						

DESIG	LOCATION	FROM CIRCUIT	TO/FROM CIRCUIT OR LOCATION						
G	B106/G1	MTC	MTFC	DTM	LLC	LL			
G	B112/B6	LLDC	LL						
G	B306/D7	MTC	MTFC	DTM	LLMC	LL			
G	B306/E0	MTC	MTFC	CM	LLC	LL			
G	B512/E7	OR	DTTDC						
G	C104/C1,F1	PC	ORMC/IRMC						
G	C408/D7	MTC	MTFC	DTM	LLMC	LL			
G	C408/E0	MTC	MTFC	CM	LLC	LL			
G	C824/C2	M AMPL	T TERM						
G	D204/C1,F1	PC	ORMC/IRMC						
G	D629/B9	IT	RSW						
G	D706/C5	RSW	IT						
G	D709/B2	TRC	PRF						
G	D805/D0	RSW	IT						
G'0,1,2,4,7	C208/F5	CM	MTFC						
G'0,1,2,4,7	D213/F5	CM	MTFC						
GBE	C205/B6,H6	CM	OSC						
GB0	C205/B6,H6	CM	OSC						
GLH	B421/D5	MTFC	DTM						
GLH	C530/A2	MTFC	CM						
GLH	D622/A2	CM	MTFC						
GR	B608/F4	MTC	MTFC	PRT	B609/D0	PRTC			
GRD	B508/A5	OR	TTR						
GS1-5	C519/A4-C4	CM	MTFC						
GT	C107/C6	PC	ORMC						
GT	D207/C6	PC	IRMC						
GTL	B428/D0	MTFC	DTM						
GTL	C214/B0	MTFC	CM						
GT2	B421/H3	MTFC	DTM						
GT2	C530/B2	MTFC	CM						
GT2	D622/B2	CM	MTFC						
GT5	C530/A2	MTFC	CM						
GT5	D622/B2	CM	MTFC						
G0-4	B408/B1-D1	TLC	DTM						
G0-4	C510/B1-D1	TLC	CM						
G0-4	D610/B1-D1	CM	TLC						
G0,1,2,4,7	C115/D2	MTC	MTFC	CM	ORMC	OR			
G0,1,2,4,7	C145/A5	CM	MTFC	MTC	AMRST				
G0,1,2,4,7	C151/C7	AMRST	MTFC						
G0,1,2,4,7	C153/B3	AMRST	MTFC	CM	ORMC	OR			
G0,1,2,4,7	C208/F0	CM	OSC	OS					
G0,1,2,4,7	C610/A5	CM	OSC	OS					
G0,1,2,4,7	C620/A5	CM	OSC	OS					
G0,1,2,4,7	D212/E2	MTC	MTFC	CM	IRMC				
G0,1,2,4,7	D212/E2	MTC	MTFC	CM	OSCIR				
G0,1,2,4,7	D212/E2	MTC	MTFC	CM	OS				
G0,1,2,4,7	D218/A5	CM	MTFC	MTC	AMRST				
G0A	B408/A1	TLC	DTM						
G0A	C510/A1	TLC	CM						
G0A	D610/A1	CM	TLC						
G1	B608/H6	MTFC	PRT						
G1	C104/B1,F1	PC	ORMC/IRMC						
G1	D204/C1,F1	PC	ORMC/IRMC						
G1,2	B605/G1,G5	PRTC	PRT						
G1T	B608/H4	MTC	MTFC						
H	B423/B0	MTC	NTC	LL					
H	C533/D0	MTC	NTC	LL					
H	C824/G4,H4	TTL	T TERM						
H	D112/D9	SR	D113/D0	IR					
H	D117/E6	AMRST	IR						
H	B629/A9	IT	RSW						
H	D631/D7	NTC	LL						
H	D706/C7	RSW	IT						
H	D805/D1	RSW	IT						
H	D808/A1	IT	NTC	LL					
H'0,1,2,4,7	C208/G5	CM	MTFC						
H'0,1,2,4,7	D213/G5	CM	MTFC						
HB0-9	D410/A6-C6	CM	NGC	NG					
HD	B605/G1	PRTC	PRT	B608/C6	MTFC	MTC			
HG	C409/D5	LLC	CM						
HG'0,1,2,4,7	B426/D6-F6	DTM	MTFC						
HG'0,1,2,4,7	C114/E3	MTFC	CM						
HGK	B107/F3,E6	MTC	MTFC	DTM	LLC	LL			
HGK	C409/E3,F7	LL	LLC	CM	MTFC				
HGK	C411/G1	CM	LLC	LL					
HGK	C532/H8	CM	MTFC	MTC					
HGK	D507/E3,F8	LL	LLC	CM	MTFC				

DESIG	LOCATION	FROM CIRCUIT	TO/FROM CIRCUIT OR LOCATION						
HGK	D509/G1	CM	LLC	LL					
HGK	D624/H8	MTC	MTFC	CM					
HGT0-9	B107/D3	MTFC	DTM	LLMC	LL				
HGT0-9	C403/E0,F0	MTC	MTFC	CM					
HGT0-9	D417/E2,F2	CM	MTFC	D416/E9					
HGT0-9	D624/G8	MTC	MTFC	CM					
HG0-9	B107/E6	DTM	LLC	LL					
HG0-9	C409/D3	LL	LLC	CM					
HG0-9	C411/G1	CM	LLC	LL					
HG0-9	D414/C7	NG	NGC	CM					
HG0-9	D507/D3	LL	LLC	CM					
HG0-9	D509/G1	CM	LLC	LL					
HG0,1,2,4,7	B426/D6-F6	DTM	TLC	ORLM					
HG0,1,2,4,7	C114/E2	MTC	MTFC	CM	ORMC				
HG0,1,2,4,7	C114/E2	MTC	MTFC	CM	OSCOR				
HG0,1,2,4,7	C114/E2	MTC	MTFC	CM	OS				
HG0,1,2,4,7	C150/C2	AMRST	MTFC	CM	ORMC	OR			
HG1-4	B508/C5-E5	OR	TTR						
HM	C206/E8	OS	OSL	OGT					
HM	C213/A5,E5	OS	OSL	OGT/IAOT					
HM	D104/E1	AMRST	IRL	IR					
HM	D126/G8	IR	D127/H0	IRL	AMRST				
HMS1	B425/H4	MTC	MTFC	DTM					
HMS1	C156/D1	CM	MTFC	AMRST					
HMS1	C535/G4	MTC	MTFC	CM					
HMS1	D623/A7	CM	MTFC						
HMS1	D627/G4	CM	MTFC	MTC					
HN0-9	D410/A6-C6	CM	MTFC						
HTK1	B107/E3	MTFC	DTM						
HTK1	C403/H6	CM	MTFC						
HTK1	D417/H7	CM	MTFC						
HTR	B111/G5	DTM	MTFC	MTC					
HTR	C133/B8	CM	MTFC						
HTR	C137/F2	MTC	MTFC	CM					
HTR	D215/F3	MTC	MTFC	CM					
HTUK	D411/G3	CM	MTFC						
H0,1,2,4,7	C115/E2	MTC	MTFC	CM	ORMC	OR			
H0,1,2,4,7	C145/A6	CM	MTFC	MTC	AMRST				
H0,1,2,4,7	C151/C8	AMRST	MTFC						
H0,1,2,4,7	C153/C3	AMRST	MTFC	CM	ORMC	OR			
H0,1,2,4,7	C208/F0	CM	OSC	OS					
H0,1,2,4,7	C610/A6	CM	OSC	OS					
H0,1,2,4,7	C620/A6	CM	OSC	OS					
H0,1,2,4,7	D212/F2	MTC	MTFC	CM	IRMC				
H0,1,2,4,7	D212/F2	MTC	MTFC	CM	OSCIR				
H0,1,2,4,7	D212/F2	MTC	MTFC	CM	OS				
H0,1,2,4,7	D218/A6	CM	MTFC	MTC	AMRST				
I	B512/E7	OR	DTTDC						
IM	B106/C8	LL	MTC						
IM	C108/C8	MTRC	PC						
IM	C142/G3	PC	MTC						
IM	D134/G3	PC	MTRC						
IM	D210/C8	MTRC	PC						
INC	D208/G3	MTC	MTFC	CM	IRMC	IR			
INT	D709/D2	TRC	PRF						
ITR	C108/A1	MTFC	CM						
ITR	D210/B1	CM	MTFC						
J	D112/D9	SR	D113/D0	IR					
J'0,1,2,4,7	C208/G5	CM	MTFC						
J'0,1,2,4,7	D213/G5	CM	MTFC						
JCK	B415/G2	MTFC	DTM						
JCK	C525/E7	CM	MTFC						
JCK	D617/E7	CM	MTFC						
JC0-7	B423/B0	MTC	NTC						
JC0-7	D808/B1	IT	NTC						
JC0-9	B411/A1-D1	TL	TLC	DTM	MTFC				
JC0-9	C521/A0-D0	TL	TLC	CM	MTFC				
JC0-9	D613/A0-D0	TL	TLC	CM	MTFC				
JG0-3	B407/A0-F0	DTM	MTFC						
JG0-3	C509/A0-F0	MTFC	CM						
JG0-3	D609/A0-F0	CM	MTFC						
JG0-4	B406/A0-E0	DTM	MTFC						
JG0-4	C508/A0-E0	MTFC	CM						
JG0-4	D608/A0-E0	CM	MTFC						
JR	C411/A6	LL	ALL						
JR	D509/A6	ALL	LL						
JS	C411/A6	LL	ALL						

LEAD INDEX

DWG SIZE C2 | ISSUE 5

BELL LABORATORIES | SFD-10-01 | A403

PRINTED IN U.S.A.

DESIG	LOCATION	FROM CIRCUIT	TO/FROM CIRCUIT OR LOCATION					
JS	D509/A6	ALL	LL					
JSQ0-5	B405/B4-E4	MTC	MTFC	DTM				
JSQ0-5	C507/A2-D2	MTC	MTFC	CM				
JSQ0-5	D607/A2-D2	MTC	MTFC	CM				
JSQ-9	B417/G1,G2	TL	TLC	DTM				
JSQ-9	B418/C0	TL	TLC	DTM				
JSQ-9	C527/G1,G2	CM	TLC	TL				
JSQ-9	C528/C0	TL	TLC	CM				
JSQ-9	D619/H1,H2	CM	TLC	TL				
JSQ-9	D620/D1	CM	TLC	TL				
JT	C411/A6	LL	ALL					
JT	D509/A6	ALL	LL					
JXPA	B420/F7	MTFC	DTM					
JXPA	C531/D4	CM	MTFC					
JXPA	D623/D4	CM	MTFC					
JXP1	B420/E7	MTFC	DTM					
JXP1	C531/D4	CM	MTFC					
JXP1	D623/D4	CM	MTFC					
J0-9	B419/F5,F6	TL	TLC	DTM				
J0-9	B423/C5	DTM	TLC	TL				
J0-9	C529/F4,F5	TL	TLC	CM				
J0-9	C533/B5	TL	TLC	CM				
J0-9	D616/E4,E5	TL	TLC	CM				
J0-9	D625/C5	CM	TLC	TL				
J0,1,2,4,7	C115/E2	MTC	MTFC	CM	ORMC	OR		
J0,1,2,4,7	C145/A7	CM	MTFC	MTC	AMRST			
J0,1,2,4,7	C151/C9	AMRST	MTFC					
J0,1,2,4,7	C153/D3	AMRST	MTFC	CM	ORMC	OR		
J0,1,2,4,7	C208/F0	CM	OSC	OS				
J0,1,2,4,7	C610/A6	CM	OSC	OS				
J0,1,2,4,7	C620/A6	CM	OSC	OS				
J0,1,2,4,7	D212/F2	MTC	MTFC	CM	IRMC			
J0,1,2,4,7	D212/F2	MTC	MTFC	CM	OSCIR			
J0,1,2,4,7	D212/F2	MTC	MTFC	CM	OS			
J0,1,2,4,7	D218/A7	CM	MTFC	MTC	AMRST			
K*0,1,2,4,7	C208/G5	CM	MTFC					
K*0,1,2,4,7	D213/G5	CM	MTFC					
KJSQ	B405/G3	MTC	MTFC	DTM				
KJSQ	C507/H2	MTC	MTFC	CM				
KJSQ	D607/H2	MTC	MTFC	CM				
K0,1,2,4,7	C115/F2	MTC	MTFC	CM	ORMC	OR		
K0,1,2,4,7	C145/A7	CM	MTFC	MTC	AMRST			
K0,1,2,4,7	C151/E2	AMRST	MTFC					
K0,1,2,4,7	C153/E3	AMRST	MTFC	CM	ORMC	OR		
K0,1,2,4,7	C208/F0	CM	OSC	OS				
K0,1,2,4,7	C610/A7	CM	OSC	OS				
K0,1,2,4,7	C620/A7	CM	OSC	OS				
K0,1,2,4,7	D212/G2	MTC	MTFC	CM	IRMC			
K0,1,2,4,7	D212/G2	MTC	MTFC	CM	OSCIR			
K0,1,2,4,7	D212/G2	MTC	MTFC	CM	OS			
K0,1,2,4,7	D218/A7	CM	MTFC	MTC	AMRST			
L	B110/F8	ALMS	JLK					
L	B410/D1	DTM	TLC	TL				
L	B503/B9	OR	ORMC	PC				
L	B512/G8	OR	DTTDC					
L	C106/F9	JLK	ALMS					
L	C108/D6	OR	ORMC	PC				
L	C207/H1	ALMS	JLK					
L	C520/C1	TL	TLC	CM				
L	D112/D9	SR	D113/D0	IR				
L	D206/F9	JLK	ALMS					
L	D414/F3	CM	NGC	NG				
L	D612/C1	TL	TLC	CM				
L*0,1,2,4,7	C208/G5	CM	MTFC					
L*0,1,2,4,7	D213/G5	CM	MTFC					
LA	B513/A7	T-REG	JLK					
LA	D425/B2	CM	NGC	NG				
LAL	C142/D6	JLK	MTRC					
LAL	D134/D6	JLK	MTRC					
LATT	C310/G7	APTT	MTC					
LB	B112/C6	LLDC	LL					
LB	C824/C7	M AMPL	T TERM					
LB	D419/H4	CM	MTFC					
LB	D623/G7	CM	MTFC					
LB	D706/B7	RSW	OI					
LB	D806/D7	CM	MTFC					
LBT	D706/A7	RSW	OI					

DESIG	LOCATION	FROM CIRCUIT	TO/FROM CIRCUIT OR LOCATION					
LB0-9	B414/E2,E3	DTM	LLC	LL				
LB0-9	B423/C4	DTM	LLC	LL				
LB0-9	C524/E2,E3	LL	LLC	CM				
LB0-9	D616/E2,E3	LL	LLC	CM				
LC	B112/D6	LLDC	LL					
LCA	B106/G9	LL	JLK					
LCA	B609/D5	JLK	PRTC					
LCA	C107/B8	PC	JLK					
LCA	D207/B8	PC	JLK					
LCB	B103/G1	LLMC	PC	LL				
LCB	C105/C1,G1	PC	ORMC/IRMC					
LCB	D205/C1,G1	PC	ORMC/IRMC					
LCH	D306/G3	CM	MTFC					
LCH	D709/D2	TRC	PRF					
LCK	B418/F9	MTFC	DTM	TLC	TL			
LCK	B419/F8	MTFC	DTM	TLC	TL			
LCK	B421/C1	MTFC	DTM	TLC	TL			
LCK	C311/C1	MTC	MTFC	CM	TLC	TL		
LCK	C528/F6	TL	TLC	CM	MTFC	MTC		
LCK	C529/F6	TL	TLC	CM	MTFC	MTC		
LCK	D307/C1	MTC	MTFC	CM	TLC	TL		
LCK	D620/F6	TL	TLC	CM	MTFC	MTC		
LCK	D621/F6	TL	TLC	CM	MTFC	MTC		
LC0-9	B421/A6	TL	MTFC					
LC0-9	C311/F9	TL	MTFC					
LC0-9	D307/F9	TL	MTFC					
LDT	B111/B4	DTM	MTFC					
LDT	C136/C2	MTFC	CM					
LDT	D214/C2	CM	MTFC					
LFK	B107/H3	MTFC	DTM	LLC				
LFK	C409/A5	LLC	CM	MTFC				
LFK	C410/C1	MTFC	CM	LLC	ALL			
LFK	D507/A5	LLC	CM	MTFC				
LFK	D508/C1,E1	MTFC	CM	LLC	ALL			
LFS	B303/H7	PCMB	LLMC	DTM				
LFS	C405/H9	PCMB	LLMC	DTM				
LFS	D505/D6	PCMB	LLMC	DTM				
LG1-4	B508/B5,C5	OR	TTR					
LHB	D410/D6	CM	NGC	NG				
LHM	B422/D8	MTC	MTFC	B423/D0	DTM			
LHM	C532/D6	MTC	MTFC	C533/C0	CM			
LHM	D426/C0	CM	MTFC	MTC				
LHM	D624/D6	MTC	MTFC	D625/C0	CM			
LHMT	B422/D8	MTC	MTFC	B423/D0	DTM			
LHMT	C532/D6	MTC	MTFC	C533/C0	CM			
LHMT	D426/C0	CM	MTFC	MTC				
LHMT	D624/D6	MTC	MTFC	D625/C0	CM			
LH0-4	B419/F0	LL	LLC	DTM				
LH0-4	B423/C2	DTM	LLC	LL				
LH0-4	C529/F0	TL	TLC	CM				
LH0-4	C533/C1,C2	CM	LLC	LL				
LH0-4	D426/B0	CM	LLC	LL				
LH0-4	D625/C2	CM	LLC	LL				
LH0-4	D808/B4	CM	LLC	LL				
LH0-9	B414/E6-E8	DTM	TLC	LL				
LH0-9	B419/F9	TL	TLC	DTM				
LH0-9	B423/C7	DTM	TLC	TL				
LH0-9	C524/E6-E8	TL	TLC	CM				
LH0-9	C529/F9	TL	TLC	CM				
LH0-9	C533/B7	TL	TLC	CM				
LH0-9	D616/E6-E8	TL	TLC	CM				
LH0-9	D625/C7	CM	TLC	TL				
LI	D623/F7	CM	MTFC					
LIN	D306/A3	CM	MTFC					
LK	B106/G9	JLK	ALMS					
LK	B204/F9	PCMB	ALMS					
LK	B303/A8	PCMB	ALMS					
LK	B410/D1	TL	TLC	DTM	MTFC			
LK	B430/B4	OR	AMRST					
LK	B513/A9	JLK	ALMS					
LK	B611/E4	PRT	MTFC	JLK				
LK	B611/H4	ALMS	MISC					
LK	C107/C9	JLK	ALMS					
LK	C156/G3	JLK	AMRST					
LK	C306/E9	PCMB	ALMS					
LK	C405/A8	PCMB	ALMS					
LK	C520/D1	TL	TLC	CM	MTFC			

DESIG	LOCATION	FROM CIRCUIT	TO/FROM CIRCUIT OR LOCATION			
LK	D104/G1	IRL	AMRST			
LK	D106/G1	IR	IRL			
LK	D107/G1	IR	IRL			
LK	D126/C9	IR	D127/F0	IRL	AMRST/IT	
LK	D207/C9	JLK	ALMS			
LK	D304/E9	PCMB	ALMS			
LK	D409/A9	PCMB	ALMS			
LK	D505/D7	PCMB	ALMS			
LK	D612/D1	TL	TLC	CM	MTFC	
LK1	C142/D5	ALMS	JLK			
LK1	C604/D5	CM	MTFC	MTC		
LK1	D134/D5	ALMS	JLK			
LK1	D704/D5	CM	MTFC	MTC		
LK1	D806/C7	CM	MTFC			
LK2	B611/D5	JLK	ALMS			
LK2	C156/G2	ALMS	JLK			
LK2,3	B502/F4,E4	MTC	MTFC	DTM		
LK2,3	C605/D1	CM	MTFC	MTC		
LK2,3	D705/D1	CM	MTFC	MTC		
LLF	B302/A9,C9	JLK	LLC	CM	MTC	
LLF	B302/E9,H9	JLK	LLC	DTM	MTC	
LLF	C404/A9,C9	JLK	LLC	CM	MTC	
LLF	C404/E9,H9	JLK	LLC	DTM	MTC	
LLF	D504/A9,C9	JLK	LLC	CM	MTC	
LLF	D504/E9,H9	JLK	LLC	DTM	MTC	
LLJ	B423/G0	MTC	MTFC	DTM		
LLJ	C533/G0	MTC	MTFC	CM		
LLJ	D625/F5	CM	MTFC	MTC		
LL0-9	B414/E0,E1	DTM	LLC	LL		
LL0-9	C524/E0,E1	LL	LLC	CM		
LL0-9	D616/E0,E1	LL	LLC	CM		
LL0-9	D808/E7	MTC	CM	LLC	LL	
LL0,1,2,4,7	B427/C5-E5	MTFC	DTM	TLC	ORLM	
LL0,1,2,4,7	C111/E4	MTFC	CM	ORMC	OR	
LMTT	C310/H7	APTT	MTC			
LO	B306/C3	CM	LLC	LL		
LO	C408/D3	CM	LLC	LL		
LO	D106/G1	IR	IRL			
LO	D107/G1	IR	IRL			
LOB	B306/C4	CM	LLC	LL		
LOB	C408/D4	CM	LLC	LL		
LOK	B306/C2	CM	LLC	LL		
LOK	C408/D2	CM	LLC	LL		
LP	B513/A7,E8	T-REG/OR	JLK			
LP	C207/H3	JLK	OS			
LP	C615/D7	OS	JLK			
LP	C624/G3	OS	JLK			
LP	D114/H5	IR	JLK			
LR	C411/A6	LL	ALL			
LR	D114/C5	IR	IRMC	CM	MTFC	MTC
LR	D131/E9	MTFC	CM	IRMC	IR	
LR	D509/A6	ALL	LL			
LS	C411/A6	LL	ALL			
LS	D509/A6	ALL	LL			
LST	C212/F9	OS	OSC	CM	MTFC	
LT	B603/D5	OR	PRTC	PRT	MTFC	MTC
LT	C110/D3	MTC	MTFC	CM	ORMC	OR
LT	C411/A6	LL	ALL			
LT	D208/E3	MTC	MTFC	CM	IRMC	IR
LT	D509/A6	ALL	LL			
LTR	B421/G4	MTFC	DTM			
LT1	C110/D3	MTC	MTFC	CM	ORMC	OR
LT2	B503/C9	OR	PRTD			
LT2	D125/F4	IR	T SUP			
LT2	D126/C3	IR	T SUP			
LT4	D706/A9	OI	T SUP			
LV	C411/A4	PCMB	LL			
LV	D509/A4	PC	LL			
LV0-9	C311/E9,F9	TL	MTFC			
LV0-9	C411/C6-E6	LL	ALL			
LV0-9	D307/E9,F9	TL	MTFC			
LV0-9	D509/C6-E6	LL	ALL			
LV2	B421/A6	MTFC	TL			
LW	D709/E2	TRC	PRF			
LXPA	B420/D3	MTFC	DTM			
LXPA	C531/D7	CM	MTFC			
LXPA	D623/D7	CM	MTFC			

ISSUE	DWG SIZE	LEAD INDEX
5	C2	
A404	SFD-10-01	BELL LABORATORIES

PRINTED IN U.S.A.

DESIG	LOCATION	FROM CIRCUIT	TO/FROM CIRCUIT OR LOCATION					
LXP1	B420/F3	MTFC	DTM					
LXP1	C531/D7	CM	MTFC					
LXP1	D623/C7	CM	MTFC					
L0-8	B402/D4	TL	DTM					
L0-8	C504/D4	TL	CM					
L0-8	D604/D4	TL	CM					
L0,1,2,4,7	C115/G2	MTC	MTFC	CM	ORMC	OR		
L0,1,2,4,7	C145/A8	CM	MTFC	MTC	AMRST			
L0,1,2,4,7	C151/F2	AMRST	MTFC					
L0,1,2,4,7	C153/F3	AMRST	MTFC	CM	ORMC	OR		
L0,1,2,4,7	C208/F0	CM	OSC	OS				
L0,1,2,4,7	C610/A7	CM	OSC	OS				
L0,1,2,4,7	C620/A7	CM	OSC	OS				
L0,1,2,4,7	D212/G2	MTC	MTFC	CM	IRMC			
L0,1,2,4,7	D212/G2	MTC	MTFC	CM	OSCIR			
L0,1,2,4,7	D212/G2	MTC	MTFC	CM	OS			
L0,1,2,4,7	D218/A8	CM	MTFC	MTC	AMRST			
L5D	C212/F9	OS	OSC	CM	MTFC			
M	B430/D6	OR	TLC	DTM	AMRST			
M	B430/G4	AMRST	MTC	MTFC				
M	C607/E0	MISC	TRC					
M	D112/D9	SR	D113/D0	IR				
M	D709/E0	MISC	TRC					
M'7	C208/G5	CM	MTFC					
M'7	D213/G5	CM	MTFC					
MA	B103/B1	LLMC	PC					
MA	B104/E6	LLMC	PC					
MA	C105/B1,F1	ORMC/IRMC	PC					
MA	C207/B4	OSC	CM					
MA	D205/B1,F1	ORMC/IRMC	PC					
MAK	B202/C0-C8	DTM	TLC					
MAK	B204/B0	DTM	TLC					
MAK	C304/C0-C9	TLC	CM					
MAK	C305/B0	TLC	CM					
MAK	D304/B0	CM	TLC					
MAK-	B104/G5	DTM	PC					
MAK1	B204/C0	DTM	MTFC	MTC				
MAK1	C304/E0	CM	MTFC	MTC				
MAK1	C306/C0	CM	MTFC					
MAK1	D304/C0	CM	MTFC					
MAN	B429/G4	MTFC	DTM	TLC	OR			
MAN	C704/D1	MTFC	DTM	TLC	OR			
MB	B110/C2	MTFC	DTM	JLK				
MB	B110/C6	PRTD	DTM	LLMC				
MB	B110/H6	LL	PCMB					
MB	B209/B9	OR	JLK	TL				
MB	B430/E4	OR	AMRST					
MB	B513/E8	TL	JLK	OR	AMRST			
MB	B611/C6	JLK	PRT	PRTC				
MB	C105/B1,F1	ORMC/IRMC	PC					
MB	C106/C2	MTFC	CM	JLK				
MB	C106/C6	PRTD	CM	ORMC				
MB	C155/C8	AMRST	OR					
MB	C207/B4	OSC	CM					
MB	C207/F3	JLK	OS					
MB	C309/B9	TL	OGT					
MB	C616/D5	TL	OGT					
MB	C626/D5	TL	OGT					
MB	D110/D5	TL	OGT					
MB	D114/G5	IR	JLK					
MB	D124/C4	TL	OGT					
MB	D205/C1,F1	ORMC/IRMC	PC					
MB	D206/C2	MTFC	CM	JLK				
MB	D206/E6	PRTD	CM	IRMC				
MB	D408/F0	PCMB	NG					
MB	D709/D2	TRC	PRF					
MBA	C207/G2	MTC	JLK					
MBB	C207/G2	MTC	JLK					
MBL	B110/E6	DTM	JLK					
MBL	C106/E6	CM	JLK					
MBL	D206/E6	CM	JLK					
MBO,1,2,4,7	C211/B6	MTFC	CM	OSC	OS			
MC	B204/A4,B4	TLC	PCMB					
MC	B303/D1	LLC	PCMB					
MC	C105/B1,F1	ORMC/IRMC	PC					
MC	C207/B4	OSC	CM					
MC	C306/A5,B5	TLC	PCMB					

DESIG	LOCATION	FROM CIRCUIT	TO/FROM CIRCUIT OR LOCATION					
MC	C405/D0	LLC	PCMB					
MC	D205/B1,F1	ORMC/IRMC	PC					
MC	D304/A5,B5	TLC	PCMB					
MC	D409/D0	NGC	PCMB					
MC	D505/D0	LLC	PCMB					
MCK-	B104/G5	DTM	PC					
MCO-59	B104/H6	DTM	PC					
MDI	C120/B8	CM	JLK					
MDK	B415/F5	DTM	TLC					
MDK	C306/B0	TLC	CM					
MDK	D304/B0	CM	TLC					
MF	B105/B4	MTC	MTFC	DTM				
MF	C111/C4	MTC	MTFC	CM	ORMC	OR		
MFK	C410/A5	CM	LLC	PCMB	ALL			
MFK	D508/A5,D5	CM	LLC	PCMB	ALL			
MIT	B110/E2	MTFC	DTM					
MIT	C106/E2	MTFC	CM					
MIT	D206/E2	MTFC	CM					
MJ	B106/H8	ALM	LL					
MJ	B110/B9,G6	ALM	MISC/LL					
MJ	B111/B0	ALM	LLDC					
MJ	B513/D8	ALM	JLK					
MJ	B609/G4	ALM	PRTC					
MJ	B611/E4	PRT	JLK					
MJ	B611/F3	PRT	ALM	MISC				
MJ	C106/B9	MISC	ALM					
MJ	C107/C8	PC	ALM					
MJ	C142/E4	ALM	MTC					
MJ	D134/E4	ALM	MTC					
MJ	D206/B9	MISC	ALM					
MJ	D408/G2	NG	ALM					
MJ1	B106/H9	LL	JLK					
MJ1	B609/F4	JLK	PRTC					
MJ1	C107/C8	PC	JLK					
MJ1	C142/E5	MTC	JLK					
MJ1	D134/E5	MTC	JLK					
MK	B106/D4	LLMC	LL					
MK	C104/C7,G7	ORMC/IRMC	PC					
MK	C107/A5	ORMC	PC					
MK	D204/C7,G7	ORMC/IRMC	PC					
MK	D207/B5	IRMC	PC					
MKA	C607/C7	MTFC	CM					
MKA	D709/C7	CM	MTFC					
MKB	C149/H7	AMRST	CM	MTFC				
MKB	C607/C7	MTFC	CM					
MKB	D709/C7	CM	MTFC					
MKR	B110/G2	PRF	MTFC					
MKR	C106/G2	PRF	MTFC					
MKR	D206/G2	PRF	MTFC					
MKR-CM	C106/G2	PRF	MTFC					
MKR-CM	D206/G2	PRF	MTFC					
MKR-DTM	B110/G2	PRF	MTFC					
MLF	B105/A4	MTC	MTFC	DTM				
MLFA	B105/C4	MTC	MTFC	DTM				
MN	B204/A9	PCMB	ALM					
MN	B303/A0	ALM	PCMB					
MN	B513/B7	T-REG	ALM					
MN	B611/E4	PRT	JLK					
MN	C156/F3	AMRST	JLK					
MN	C156/F3	JLK	ALM					
MN	C306/A9	ALM	PCMB					
MN	C405/A0	ALM	PCMB					
MN	C535/H8	JLK	ALM					
MN	D304/A9	PCMB	ALM					
MN	D409/A0	ALM	PCMB					
MN	D505/A0	PCMB	ALM					
MN	D627/H8	ALM	JLK					
MN1	B513/B7	T-REG	JLK					
MON	C148/B4	AMRST	OR	ORMC	CM			
MONL	C148/B5	AMRST	CM					
MON1	C148/C5	AMRST	CM					
MOR	C156/E7	AMRST	MTFC					
MO1	B502/B4	MTC	MTFC	DTM				
MO1	C605/D7	CM	MTFC	MTC				
MO1	D705/D7	CM	MTFC	MTC				
MPP	C410/F1	MTC	MTFC	CM	LLC	PCMB		
MPP	D508/F1	MTC	MTFC	CM	LLC	PCMB		

DESIG	LOCATION	FROM CIRCUIT	TO/FROM CIRCUIT OR LOCATION					
MPPO-59	C410/F6-G7	PCMB	MTC	LLC				
MPPO-59	D508/F6-G7	PCMB	MTC	LLC				
MPT	D808/G0	CM	MTFC					
MRL	B502/B4	MTC	MTFC	DTM				
MRL	C107/D2	MTC	MTFC	CM	ORMC	OR/PC		
MRL	D131/B5	IR	IRMC	CM	MTFC			
MRL	D207/D2	MTC	MTFC	CM	IRMC	IR/PC		
MSK-	B104/F5	DTM	PC					
MST	C148/D4	AMRST	OR					
MST1	C149/A7	AMRST	OR					
MS1	B104/B6	LLMC	LL					
MS1	C104/C7,G7	ORMC/IRMC	PC					
MS1	C142/B2	PC	ORMC/IRMC					
MS1	D134/B2	PC	ORMC/IRMC					
MS1	D204/C7,G7	PC	ORMC/IRMC					
MS2	B104/B6	LLMC	LL					
MS2	C104/D7,G7	ORMC/IRMC	PC					
MS2	C142/C2	PC	ORMC/IRMC					
MS2	D134/C2	PC	ORMC/IRMC					
MS2	D204/D7,H7	PC	ORMC/IRMC					
MT	B202/E0	DTM	MTFC					
MT	C106/A1	MTFC	CM					
MTR	C605/A8	CM	AMRST					
MTR	D705/A8	CM	AMRST					
MTT	C310/F7	APTT	TL					
MT1K	C502/G2	MTC	MTFC	CM				
MT1K	D607/G2	MTC	MTFC	CM				
MT10K	C507/E2	MTC	MTFC	CM				
MT10K	D607/E2	MTC	MTFC	CM				
MT12	C310/D2	MTC	MTFC	CM				
MT2	C204/D4	MTC	CM					
MT2K	B405/G3	MTC	MTFC	DTM				
MT2K	C502/G2	MTC	MTFC	CM				
MT2K	D607/G2	MTC	MTFC	CM				
MT3	C304/E2	CM	MTC					
MT3K	B405/G3	MTC	MTFC	DTM				
MT3K	C502/F2	MTC	MTFC	CM				
MT3K	D607/F2	MTC	MTFC	CM				
MT4	B202/E2	MTC	DTM					
MT5	B208/F6	DTM	MTFC	MTC				
MT5	C308/F8	CM	MTFC	MTC				
MT7	B412/D2	MTC	MTFC	DTM				
MT7	C522/D2	MTC	MTFC	CM				
MT7	D614/D2	MTC	MTFC	CM				
MT7K	C502/H2	MTC	MTFC	CM				
MT7K	D607/H2	MTC	MTFC	CM				
MT8	B405/H3	DTM	MTC					
MT8	C507/H2	MTC	CM					
MT8	D607/H3	CM	MTC					
MT8K	B405/F3	MTC	MTFC	DTM				
MT8K	C507/E2	MTC	MTFC	CM				
MT8K	D607/E2	MTC	MTFC	CM				
MT9	C306/H7	CM	MTC					
MT9	D304/H7	CM	MTC					
MT9K	B405/F3	MTC	MTFC	DTM				
MT9K	C507/F2	MTC	MTFC	CM				
MT9K	D607/F2	MTC	MTFC	CM				
MXT	B405/H8	DTM	MTFC					
MXT	C109/D5	CM	MTFC					
MXT	C507/G8	CM	MTFC					
MXT	D115/D5	CM	MTFC					
MXT	D607/G9	CM	MTFC					
M7	C115/G2	MTC	MTFC	CM	ORMC	OR		
M7	C145/A9	CM	MTFC	MTC	AMRST			
M7	C153/G3	AHRST	MTFC	CM	ORMC	OR		
M7	C208/F0	CM	OSC	OS				
M7	C610/A8	CM	OSC	OS				
M7	C620/A8	CM	OSC	OS				
M7	D212/H2	MTC	MTFC	CM	IRMC			
M7	D212/H2	MTC	MTFC	CM	OSCIR			
M7	D212/H2	MTC	MTFC	CM	OS			
M7	D218/A9	CM	MTFC	MTC	AMRST			
N	D116/H4	AMRST	MTC					
ND	C310/A6	CM	OSC	OS				
NDK	C310/B3	MTFC	CM					
NDT	C310/A0	TT	MTC	CM				
NDT	C310/B2	MTC	MTFC	CM				

LEAD INDEX

DWG SIZE	ISSUE
C2	5

BELL LABORATORIES SFD-10-01 A405

PRINTED IN U.S.A.

DESIG	LOCATION	FROM CIRCUIT	TO/FROM CIRCUIT OR LOCATION					
ND1	C310/B3	MTFC	CM					
NE	D213/H5	CM	MTFC					
NG	D408/C1	MTFC	NGC					
NGCT0-3	D408/D1	MTFC	NGC					
NGCU0-9	D408/C1	MTFC	NGC					
NGC0-9	D408/C1	MTFC	NGC					
NGF	D408/E1	JLK	NGC	CM	MTC			
NGK	D411/F3	MTFC	CM	NGC	NG			
NGTA-H	D421/H6	CM	MTC					
NG1	D408/C1	MTFC	NGC					
NH	D805/F1	IT	TLC	CM	MTFC	MTC		
NN	D805/E1	IT	TLC	CM	MTFC	MTC		
NOB	C111/D4	MTFC	CM	ORMC	OR			
NOB	C211/G7	CM	OSC	OS				
NOB'	C211/G6	CM	MTFC					
NOBT	C111/C4	MTC	MTFC	CM				
NOC	C312/E0	CM	MTFC					
NR	D418/G2	CM	MTFC					
NSI	C128/E3	CM	MTFC					
NSI	C204/B4	MTFC	CM					
NSO	C204/A4	MTFC	CM					
NSO	C704/G1	MTFC	CM					
NT	B423/C1	NTC	LL	LLC	DTM			
NT	C533/B0	CM	LLC	LL	NTC			
NT	D625/C0	CM	LLC	LL	NTC			
NT	D631/D7	NTC	LL	LLC	CM			
NT	D805/D1	IT	TLC	CM	MTFC	MTC		
NT	D808/B3	NTC	LL	LLC	CM			
NTH	B422/C8	MTC	MTFC	B423/D0	DTM			
NTH	C532/D6	MTC	MTFC	C533/C0	CM			
NTH	D624/C6	MTC	MTFC	D625/C0	CM			
NTLH	D808/C7	CM	MTC					
NTR	D806/B7	CM	MTC					
NTT	D806/D7	CM	MTFC					
OA	D208/B3	MTC	MTFC	CM	IRMC	IR		
OA	D408/D1	MTFC	NGC					
OA	D425/C2	CM	NGC	NG				
OB	D208/C3	MTC	MTFC	CM	IRMC	IR		
OB	D408/D1	MTFC	NGC					
OBS	C111/E4	MTFC	CM	ORMC	OR			
OBS	C211/F7	CM	OSC	OS				
OBS'	C211/G6	CM	MTFC					
OBST	C111/D4	MTC	MTFC	CM				
OCN	D207/E2	MTC	MTFC	CM	IRMC			
OC1	B104/A2	MTC	MTFC	DTM	LLMC			
OC2	B104/B5	DTM	LLMC					
OD	C216/E4	MTFC	CM	OSC	OS			
OD'	C216/F4	MTFC	CM					
OF	D706/B7	RSW	OI					
OF-	C119/G3	CM	T-REG					
OFH	D630/C2	CM	MTFC					
OFK	D414/F7	NG	NGC	CM				
OFT	B503/C6	IPM	OR					
OFT	D706/A7	RSW	OI					
OH	D104/F1	AMRST	IRL	IR				
OH	D126/G8	IR	D127/H0	IRL	AMRST			
OHB	D410/D6	CM	NGC	NG				
OK	C614/F8	MTC	AMRST					
ON	B430/B6	AMRST	OR					
ON	C149/G6	AMRST	MTFC					
ON	C607/H5	TRC	MTFC					
ON	D114/G5	IR	IRL					
ON	D117/D1	AMRST	IRL					
ON	D117/E7	IR	IRL					
ON	D709/C2	TRC	PRF					
ON	D709/H5	TRC	MTFC					
ONN	C216/A1	TL	TLC	CM	MTFC			
ON1	C206/F6	CM	OSC	OS				
OPR	C130/H7	CM	MTFC					
OR	C1[illegible]0/B3	MTC	MTFC	CM	ORMC	OR		
OR	C155/A8	AMRST	P-REG					
ORB	B513/B7	GB	T-REG					
ORB1	B513/A7	GB	T-REG					
ORC'0	C216/H4	CM	MTFC					
ORC0	C216/H5	CM	OSC	OS				
ORF	C155/B8	AMRST	P-REG					
ORK	C209/F8	CM	MTFC					

DESIG	LOCATION	FROM CIRCUIT	TO/FROM CIRCUIT OR LOCATION					
OR2	C110/B1	MTC	MTFC	CM	ORMC	OR		
OSE	C206/C6	MTFC	CM					
OSGA0-11	C205/A6	CM	OSC					
OSGB0-11	C205/G6	CM	OSC					
OSG0-11	C128/F1	CM	MTFC					
OSG0-11	C204/B3	MTC	MTFC	CM				
OSK	C204/G4	MTC	MTFC	CM				
OS0-4	C206/B8	OS	OSC	CM	MTFC	MTC		
OTB	D425/D2	CM	NGC	NG				
OTS0,1	B209/F1	MTC	DTM					
OTS0,1	C309/F2	MTC	CM					
OTT	C310/C2	MTC	MTFC	CM				
OV	D630/B2	CM	MTFC					
OV	D806/E7	CM	MTFC					
OVF0-9	D420/H6	CM	T-REG					
OVL	B513/D5	OR	GB					
PA	B403/C0	DTM	MTFC					
PA	C505/C0	MTFC	CM					
PA	D605/C0	CM	MTFC					
PB	B403/D0	DTM	MTFC					
PB	C505/D0	MTFC	CM					
PB	D605/D0	CM	MTFC					
PBC	B508/B1	OR	TUR					
PBL	B611/A6	JLK	PRT					
PBN	D414/G7	NG	NGC	CM				
PC	B403/E0	DTM	MTFC					
PC	C505/E0	MTFC	CM					
PC	D605/E0	CM	MTFC					
PC-	C119/F3	CM	T-REG					
PCK	B608/F4	MTC	MTFC	PRT	B609/D0	PRTC		
PD	C112/B2	MTC	MTFC	CM	ORMC	OR		
PE	B403/F0	DTM	MTFC					
PE	C505/F0	MTFC	CM					
PE	D605/F0	CM	MTFC					
PK	C112/A2	MTC	MTFC	CM	ORMC	OR		
PKU	D706/C6	RSW	IT					
PL	C614/A9	AMRST	OS					
PLL	C410/B1	CM	MTFC	MTC				
PLL	D508/F1	MTC	MTFC	CM				
PMO	D414/G7	NG	NGC	CM				
PN	D411/A8	NG	NGC	CM	MTFC			
PNR	B403/A0	DTM	MTFC					
PNR	C505/A0	MTFC	CM					
PNR	D605/A0	CM	MTFC					
PN1	D411/A8	CM	NGC	NG				
PR	B408/G7	TLC	DTM	MTFC				
PR	C510/G7	TLC	CM	MTFC				
PR	D610/F9	TLC	CM	MTFC				
PRCY	D419/H4	CM	MTFC					
PRG	B611/D3	PRT	MTFC					
PRL	B608/A4	MTC	MTFC	PRT	B609/D0	PRTC	OR	
PS	C112/B2	MTC	MTFC	CM	ORMC	OR		
PST	B611/E1	P-REG	PRT					
PTK	D411/A3	CM	MTFC					
PTN	D411/B8	CM	NGC	NG				
PTN	D411/C3	CM	MTFC					
PTN1	D411/B8	CM	NGC	NG				
PTP	B611/D3	PRT	MTFC					
PTR	B608/D4	MTC	MTFC	PRT	B609/D0	PRTC		
PU	D706/D3	IT	PRTD					
PUL	D419/C8	CM	MTFC					
P0-9	B402/D1	TL	DTM	MTFC				
P0-9	C504/D1	TL	CM	MTFC				
P0-9	D604/D1	TL	CM	MTFC				
R	B410/A1	DTM	TLC	TL				
R	B425/B1	MDF	LL	NTC	MTC			
R	B425/B1	MDF	LL	JGF	TL	OR		
R	B503/C1	MDF	LL	TL	OR	TTR		
R	C213/D5,H5	OS	OSL	OGT				
R	C215/A1	OGT	OSL	OS				
R	C520/A1	TL	TLC	CM				
R	C535/C2	MTC	NTC	LL	TL	TRK		
R	C616/C1	MDF	LL	TL	OGT	MDF		
R	C616/F0	SR	AMRST	OS	OSL	OGT		
R	C617/C0	MDF	IT	TL	LL	MDF		
R	C617/E3	IT	IRL	IR	SR			
R	C626/C2	MDF	LL	TL	OGT	MDF		

DESIG	LOCATION	FROM CIRCUIT	TO/FROM CIRCUIT OR LOCATION					
R	C626/H1	AMRST	OS	OSL				
R	C627/C1	MDF	IT	TL	LL	MDF		
R	C627/E2	IT	IRL	IR				
R	C824/A2	M AMPL	T TERM					
R	C824/F2	MW SUP	TTL	T-TERM				
R	C824/F4,H4	TTL	T TERM					
R	C824/H2	MW SUP	TTL	T-TERM				
R	C824/G7	T TERM	MTC	TT				
R	C824/H8	T TERM	TT					
R	D110/C2	MDF	LL	TL	OGT	MDF		
R	D110/F0	SR	AMRST	OS	OSL	OGT	MDF	
R	D111/C1	MDF	IT	TL	LL	MDF		
R	D111/D2	IT	IRL	IR	SR			
R	D111/G4	IR	AMRST	SR				
R	D124/B1	MDF	LL	TL	OGT	MDF		
R	D124/G0	AMRST	OS	OSL	OGT			
R	D125/C1	MDF	IT	TL	LL	MDF		
R	D125/H2	AMRST	IR	IRL	IT			
R	D126/D7	AMRST	IR	D127/E0	IRL	IT		
R	D127/B1	MDF	IT	TL	LL	MDF		
R	D612/A1	TL	TLC	CM				
R	D627/A6	TRK	TL	LL	NTC	MTC		
R	D631/D7	NTC	LL					
R	D706/C5	RSW	IT					
R	D706/E9	MDF	LL	TL	IT	IRL		
RA	B206/B4	MTC	MTFC	DTM				
RA	C104/B1,F1	PC	ORMC/IRMC					
RA	C517/B0	MTC	MTFC	CM				
RA	C605/A8	CM	AMRST					
RA	C705/F0	MTFC	CM					
RA	D204/B1,F1	PC	ORMC/IRMC					
RA	D629/B9	IT	RSW					
RA	D706/C5	RSW	IT					
RA	D805/D0	RSW	IT					
RB	B513/A5	DTM	GB					
RB	C104/B1,F1	PC	ORMC/IRMC					
RB	D204/B1,F1	PC	ORMC/IRMC					
RB	D706/C5	RSW	IT					
RBD	B112/F8	GB	DTM					
RBL	B112/G6	LLDC	GB					
RBMF	B112/F8	GB	DTM					
RBR0-3	B112/F8	GB	DTM					
RBT	C517/D0	MTC	MTFC	CM	AMRST			
RBT1	C517/E0	MTC	MTFC	CM				
RB0-9	D116/C1	IRL	AMRST					
RB1-3	D106/G1	IR	IRL					
RB1-3	D107/G1	IR	IRL					
RC	B428/F0	OR	TL	TLC	DTM			
RC	C313/C1	MTC	MTFC	CM	TLC	TL	OGT	
RC	D629/B1	MTC	MTFC	CM	TLC	TL	IT	
RC	D706/C8	IT	TL	TLC	CM			
RC	D805/B1	IT	TL	TLC	CM			
RCCK	B611/E3	PRT	MTFC					
RCK2	D805/D3	CM	MTFC					
RCK2,3	D629/D1,E1	CM	MTFC					
RCT	D415/A3	CM	MTC					
RCT	D415/B3	MTC	MTFC					
RCT1-15	D415/C3,D3	MTC	MTFC	CM				
RCY	B206/E4	MTC	MTFC	DTM				
RCY	C517/A0	MTC	MTFC	CM				
RC1-15	D414/D7	NG	NGC	CM				
RF	B410/F1	TL	TLC	DTM	MTFC			
RF	C520/F1	TL	TLC	CM	MTFC			
RF	D612/F1	TL	TLC	CM	MTFC			
RG	B604/E3	PRTC	MTFC					
RG	C156/A5	AMRST	OR	ORMC	MTFC			
RG	D206/H6	PC	IRMC	MTFC				
RGG	C106/G5	MTFC	ORMC					
RGG	D206/H7	IRMC	MTFC					
RGG-	B604/B7	PRTC	MTFC					
RG0-23	C106/G5	MTFC	ORMC					
RG0-23	C106/H8	MTFC	OR	AMRST				
RG0-23	D206/G6	MTFC	PC	IR	AMRST			
RI	D419/D0	CM	MTFC					
RING G	B425/E9	DTM	PRTD					
RING G	C535/E9	PRTD	DTM/CM	JLK				
RING G	D627/E9	PRTD	DTM/CM	JLK				

ISSUE	DWG SIZE	LEAD INDEX
5	C2	
A406	SFD-10-01	BELL LABORATORIES

PRINTED IN U.S.A.

DESIG	LOCATION	FROM CIRCUIT	TO/FROM CIRCUIT OR LOCATION					
RK	B410/D1	TL	TLC	DTM	MTFC			
RK	C520/D1	TL	TLC	CM	MTFC			
RK	D612/D1	TL	TLC	CM	MTFC			
RK1-3	B428/D0,E0	MTFC	DTM					
RK2,3	C114/G3	MTFC	CM					
RL	C107/E2	MTFC	CM	ORMC	OR			
RL	D127/D1	IT	IRL					
RLK	B608/A4	MTC	MTFC	PRT	B609/D0	PRTC	OR	
RLP	C106/E7	JLK	ORMC					
RLP	D206/E7	IRMC	JLK					
RLT	C107/F2	MTC	CM	AMRST				
RM	C824/E2	M AMPL	T TERM					
RNG	D418/B2	CM	MTFC					
RNK	C214/E7	CM	MTFC					
RNT*0-2	C216/F4-H4	CM	MTFC					
RNT0,1	C216/E4,F4	CM	MTFC					
RNT2,20	C214/F3,H4	CM	MTFC					
RN0-9	C216/A4-D4	CM	MTFC					
RN0,1,2,4,7	C216/B8	CM	MTFC	MTC				
RN0,1,2,4,7	C216/C8	CM	OSC	OS				
RN10-25	C216/E1-G1	TL	TLC	CM				
RN26-29	C216/G1	CM	TLC					
RO	C614/G8	CM	OSC	OS				
RO	C614/G8	CM	OSC	OS				
RO	D112/D9	SR	D113/D0	IR				
RO	D208/E4	MTFC	CM	IRMC	IR			
RO	D630/D4	CM	IRMC	IR				
RO	D630/E2	CM	MTFC					
RO*	C525/H2	CM	MTFC					
RO*	C614/G5	CM	MTFC					
RO*	D617/H2	CM	MTFC					
ROA	C120/F2	CM	MTFC					
ROA	C134/D8	CM	MTFC					
ROA	D306/G8	CM	MTFC					
ROA	D630/D2	CM	MTFC					
ROG	C614/H4	MTC	MTFC	CM				
ROS	C607/D5	TRC	MTFC					
ROS	D709/D5	TRC	MTFC					
ROT	C614/G4	MTC	MTFC	CM				
RP	B503/G4	OR	ORMC	CM	MTFC			
RP	C113/C2	MTC	MTFC	CM	ORMC	OR		
RP	C212/H8	CM	OSC	OS				
RPAB	D206/G5	MTFC	PC	IRMC	IRL			
RPB	D206/G5	MTFC	PC	IRMC	IRL			
RPK	C212/G7	CM	MTFC					
RPSA	D206/H5	MTFC	PC	IRMC	IRL			
RP0-3	D114/E5,F5	IRL	IRMC	PC	MTFC			
RP0-3	D206/H5	MTFC	PC	IRMC	IRL			
RP0-9	D116/A1	IRL	AMRST					
RSC	C214/B2	MTFC	CM					
RSK	D628/G2	MTC	MTFC	CM	TLC	TL	RSW	
RS0-9	D628/A3-G3	CM	MTFC	MTC				
RS0-9	D628/A8,D8	CM	TLC	TL	RSW			
RT	D127/D1	IT	IRL					
RT	D706/C4	IT	RSW					
RTOS	C607/G5	TRC	MTFC					
RTOS	D709/G5	TRC	MTFC					
RT0-3	B105/E4-H4	MTC	MTFC	DTM				
RV	C705/E0	MTFC	CM					
R1,2	C617/G5	SR	IR					
R1,2	C824/G9,H9	TT	JLK					
R1,2	D111/F5	SR	IR					
R2	C616/E8	MDF	JLK					
R2	C626/E8	MDF	JLK					
R2	D110/E8	MDF	JLK					
R2	D124/C7	MDF	OGT JK					
S	B414/B4	LL	JGF	TL	OR			
S	B418/A4	JGF	TL	OR				
S	B419/A4	JGF	TL	OR				
S	B419/C3	LL	JGF					
S	B422/A1	TT	MTC	B423/B0	NTC	LL	JGF	TL
S	B422/A1	TT	MTC	B423/A2	LL	JGF	TL	OR
S	B423/A9	TL	OR					
S	B503/C3	LL	TL	OR				
S	C207/B1	OSC	CM					
S	C207/B6	AMRST	OS	OSC	MTFC			
S	C524/B4	LL	JGF	TL	OGT			

DESIG	LOCATION	FROM CIRCUIT	TO/FROM CIRCUIT OR LOCATION					
S	C528/A3	JGF	TL	IT/OGT				
S	C529/C2	LL	JGF	TL	IT/OGT			
S	C532/B2	TT	MTC	C533/A0	NTC	LL	TL	TRK
S	C532/B2	TT	MTC	C533/A1	LL	TL	TRK	
S	C616/C3	LL	TL	OGT				
S	C617/D5	IT	TL	LL				
S	C626/C3	LL	TL	OGT				
S	C627/D5	IT	TL	LL				
S	C824/G7	T TERM	MTC	TT				
S	C824/H8	T TERM	TT					
S	D110/D3	LL	TL	OGT				
S	D111/D5	IT	TL	LL				
S	D112/D9	SR	D113/D0	IR				
S	D124/B2	LL	TL	OGT				
S	D125/E5	IT	TL	LL				
S	D127/D5	IT	TL	LL				
S	D426/A1	LL	MDF					
S	D616/B4	LL	JGF	TL	IT			
S	D620/A3	JGF	TL	IT/OGT				
S	D621/A3	LL	JGF	TL	IT/OGT			
S	D624/B2	TT	MTC	D625/A1	LL	TL	TRK	
S	D624/B2	TT	MTC	D625/A0	NTC	LL	TL	TRK
S	D631/D7	NTC	LL					
S	D706/G6	IT	TL	LL				
S	D806/A2	LL	TL	TRK				
S	D808/A1	IT	NTC	LL	TL	TRK		
SA	C142/H5	MTC	AMB					
SA	D134/H5	MTRC	AMB					
SAB1,2	C528/C1,C2	TL	TLC	CM				
SAE	D424/G6	CM	MTFC					
SAE	D424/H5	CM	MTFC					
SAM	C207/B3	OSC	CM					
SB	C142/H5	MTC	AMB					
SB	C517/B0	MTC	MTFC	CM				
SB	D134/H5	MTRC	AMB					
SBA1,2	B418/C3	TL	TLC	DTM				
SBA1,2	D620/D2	CM	TLC	TL				
SBM	C207/B3	OSC	CM					
SBT	C517/B0	MTC	MTFC	CM				
SC	C206/E8	OSL	OGT					
SC	C211/G6	MTFC	CM	OSC	OS			
SC	C213/E3	OSL	IAD/OGT					
SCBA0-3	C204/B9	CM	JLK					
SCBB0-3	C204/C9	CM	JLK					
SCK	B511/E8	OR	ORMC	CM				
SCK	C112/C2	MTC	MTFC	CM	ORMC	OR		
SCK	D425/B2	CM	NG	NG				
SCM	C207/B2	OSC	CM					
SCN	B511/E8	OR	ORMC	CM				
SCN	C112/D2	MTC	MTFC	CM	ORMC	OR		
SCN	D709/E2	TRC	PRF					
SCT	C148/E5	AMRST	CM					
SD	B607/D6	OR	PRTC	PRT	MTFC	MTC		
SDT	B111/B4	DTM	MTFC					
SDT	C136/C2	MTFC	CM					
SDT	D214/C2	CM	MTFC					
SEF	B410/G1	TL	TLC	DTM	MTFC			
SEF	C520/G1	TL	TLC	CM	MTFC			
SEF	D612/G1	TL	TLC	CM	MTFC			
SF	B408/G7	TLC	DTM	MTFC				
SF	C510/G7	TLC	CM	MTFC				
SF	D610/E9	TLC	CM	MTFC				
SG	C207/B8	OSC	MTFC					
SGL	B609/E4	PRTC	JLK					
SIA	C204/D3	MTC	MTFC	CM				
SIB	C204/E4	MTC	MTFC	CM				
SIE	C204/D8	CM	OS					
SIO	C204/D8	CM	OS					
SKA	C205/D6	CM	PCMB					
SKB	C205/F6	CM	PCMB					
SL	B423/F8	MTFC	DTM					
SL	C533/F5	MTC	MTFC	CM				
SL	D625/F5	CM	MTFC	MTC				
SLCK	D418/F9	CM	MTFC					
SLK	C213/D1	OSL	TLC	CM				
SLK1,2	C207/F8	CM	MTFC					
SM	D106/G1	IR	IRL					

DESIG	LOCATION	FROM CIRCUIT	TO/FROM CIRCUIT OR LOCATION					
SM	D107/G1	IR	IRL					
SMO-9	B416/G2,G3	DTM	LLC	LL	ALL			
SMO-9	C526/G2,G3	CM	LLC	LL	ALL			
SMO-9	D618/G2,G3	CM	LLC	LL	ALL			
SNG	D408/A1	CM	MTFC					
SNK	B206/E5	MTFC	DTM					
SNK	C307/G5	CM	MTFC					
SOG	C108/B1	MTFC	CM					
SOG	D210/B1	CM	MTFC					
SON	C204/C4	MTFC	CM					
SP	B422/E8	MTC	MTFC					
SP	D804/D1,E4	MTFC	MTC/CM					
SPC	B422/C8	MTC	MTFC					
SPC	C532/E6	MTC	MTFC					
SPC	D624/E6	MTC	MTFC					
SPC	D804/F1	MTC	MTFC	CM				
SPE	C614/B9	AMRST	OS					
SPL	D208/A3	MTC	MTFC	CM	IRMC	IR		
SPL	D804/B1	PC	IRMC	IR				
SPL	D804/C1	PC	IRMC	CM	MTFC	MTC		
SPO-9	C206/B9	OSL	OS					
SQA	B405/G4	DTM	MTFC					
SQA	C507/H3	MTFC	CM					
SQA	D607/H3	CM	MTFC					
SRK	D629/D1	CM	MTFC					
SSA	C204/F4	MTC	MTFC	CM				
SSB	C204/G4	MTC	MTFC	CM				
SSO-9	C213/D0	OSL	TLC	CM				
ST	B604/E2	OR	PRTC					
ST	C104/C1,G1	OR/IR	ORMC/IRMC					
ST	C142/B0	OR/IR	ORMC/IRMC					
ST	C824/G2	MW SUP	TTL					
ST	C824/H2	MW SUP	TTL					
ST	D104/D2	IRL	IT					
ST	D104/G1	AMRST	IRL	IT				
ST	D127/D2	IT	IRL					
ST	D131/D5	IR	IRMC					
ST	D134/B0	OR/IR	ORMC/IRMC					
ST	D204/C*,G1	OR/IR	ORMC/IRMC					
ST	D706/A7	RSW	OI					
ST	D709/B2	TRC	PRF					
STA	C104/C6,F6	PC	ORMC/IRMC					
STA	C142/B1	PC	ORMC/IRMC					
STA	C205/E6	CM	PCMB					
STA	D134/B1	PC	ORMC/IRMC					
STA	D204/C6,F6	PC	ORMC/IRMC					
STB	C104/C6,H6	PC	ORMC/IRMC					
STB	C142/C1	PC	ORMC/IRMC					
STB	C205/E6	CM	PCMB					
STB	D134/C1	PC	ORMC/IRMC					
STB	D204/D6,H6	PC	ORMC/IRMC					
STG	D116/H6	AMRST	MTC					
STH	D709/B2	TRC	PRF					
STP1,2	B415/F2,G2	MTC	MTFC	DTM				
STP1,2	C525/H2,F2	MTC	MTFC	CM				
STP1,2	D617/H2,F2	CM	MTFC	MTC				
STR	B508/E5	OR	TTR					
STR	C607/A2	TRC	MTFC					
STR	D709/A2	TRC	MTFC					
STT	D116/G6	AMRST	MTC					
STW	D709/B2	TRC	PRF					
STO	C306/E5	CM	PCMB	TL				
STO	D304/E5	CM	PCMB					
STO-29	B204/G4-G7	DTM	PCMB					
STO-39	D409/H1-H8	CM	PCMB					
STO-59	B303/H1	CM	PCMB					
STO-59	B303/H6,H8	DTM	PCMB	LLMC				
STO-59	C405/H1,H3	CM	PCMB					
STO-59	C405/H5,H9	DTM	PCMB	LLMC				
STO-59	D505/H1,H3	CM	PCMB					
STO-59	D505/H5,H8	DTM	PCMB	LLMC				
SZA	B405/A7	DTM	TLC					
SZA	C507/A7	CM	TLC					
SZA	D607/A7	CM	TLC					
SZB	B405/B7	DTM	TLC					
SZB	C507/B7	CM	TLC					
SZB	D607/B7	CM	TLC					

LEAD INDEX

DWG SIZE	ISSUE
C2	5

BELL LABORATORIES SFD-10-01 A407

PRINTED IN U.S.A.

DESIG	LOCATION	FROM CIRCUIT	TO/FROM CIRCUIT OR LOCATION					
SZC	B405/B7	DTM	TLC					
SZC	C507/B7	CM	TLC					
SZC	D607/B7	CM	TLC					
S0-2	C130/A7,B7	CM	T-REG					
S0-4	C207/B0	CM	OSC					
S0-8	C607/F5	TRC	MTFC					
S0-8	D709/F5	TRC	MTFC					
S0-9	D424/A6-H6	MTFC	CM	NGC	NG	LL		
S0-9	D424/D7	CM	MTFC	CM				
S0-9	D426/D4	MTC	MTFC	CM	NGC	NG	MDF	LL
S1	B418/A9	OR	TL	TLC	DTM			
S1	B419/B9	OR	TL	TLC	DTM			
S1	C528/B9	OGT	TL	TLC	CM			
S1	C529/C9	OGT	TL	TLC	CM			
S1	D620/G9	CM	TLC	TL	OGT			
S1	D621/C9	OGT	TL	TLC	CM			
S1,2	C824/G9,H9	TT	JLK					
T	B425/A1	MDF	LL	NTC	MTC			
T	B425/A1	MDF	LL	JGF	TL	OR		
T	B503/B1	MDF	LL	TL	OR			
T	B503/C5	TTR	OR					
T	C207/F3	JLK	OS					
T	C213/D5,H5	OS	OSL	OGT				
T	C215/A2	OGT	OSL	OS				
T	C535/C2	MTC	NTC	LL	TL	TRK		
T	C616/B1	MDF	LL	TL	OGT	MDF		
T	C616/F0	SR	AMRST	OS	OSL	OGT		
T	C617/B0	MDF	IT	TL	LL	MDF		
T	C617/E3	IT	IRL	IR	SR			
T	C626/B2	MDF	LL	TL	OGT	MDF		
T	C626/F1	AMRST	OS	OSL				
T	C627/B1	MDF	IT	TL	LL	MDF		
T	C627/E2	IT	IRL	IR				
T	C824/A2	M AMPL	T TERM					
T	C824/F2	MW SUP	TTL	T-TERM				
T	C824/F4,H4	TTL	T TERM					
T	C824/F7	T TERM	MTC	TT				
T	C824/H2	MW SUP	TTL	T-TERM				
T	C824/H8	T TERM	TT					
T	D110/B2	MDF	LL	TL	OGT	MDF		
T	D110/F0	SR	AMRST	OS	OSL	OGT		
T	D111/A1	MDF	IT	TL	LL	MDF		
T	D111/D3	IT	IRL	IR	SR			
T	D111/G3	IR	AMRST	SR				
T	D124/A1	MDF	LL	TL	OGT	MDF		
T	D124/E0	AMRST	OS	OSL	OGT			
T	D125/B1	MDF	IT	TL	LL	MDF		
T	D125/H2	AMRST	IR	IRL	IT			
T	D126/D7	AMRST	IR	D127/E0	IRL	IT		
T	D127/A1	MDF	IT	TL	LL	MDF		
T	D627/A4	LL	TL	TRK				
T	D627/C2	LL	NTC	MTC				
T	D631/D7	NTC	LL					
T	D706/C4	RSW	IT					
T	D706/E1	IT	MDF	OGT				
T	D706/E6	IT	TL	LL	MDF			
T	D706/H2	IT	IRL					
TA	B110/C9	DTM	MISC					
TA	C106/C9	CM	MISC					
TA	C142/H5	AMB	MTC					
TA	D134/H6	MTRC	AMB					
TA	D206/C9	MISC	CM					
TB	B206/A4	MTC	MTFC	DTM				
TB	C142/H5	AMB	MTC					
TB	C517/C0	MTC	MTFC	CM				
TB	D134/H6	MTRC	AMB					
TBH	D419/D8	CM	MTFC					
TBI	D419/E0	CM	MTFC					
TBK	B209/H6	TL	TLC	DTM	MTFC			
TBK	C309/G6	TL	TLC	CM	MTFC			
TBO	B105/A4	MTFC	DTM					
TBO	B209/G6	DTM	TLC	TL				
TBS0-3	D410/F3	MTC	MTFC	CM	NGC	NG		
TBT	B206/A4	MTC	MTFC	DTM				
TBT	C517/C0	MTC	MTFC	CM				
TB0-9	C308/A9	CM	MTFC					
TB0-9	C309/G6	CM	TLC	TL				

DESIG	LOCATION	FROM CIRCUIT	TO/FROM CIRCUIT OR LOCATION					
TB0-9	D410/D6-G6	CM	NGC	NG				
TC	B104/C5	DTM	LLMC	LL	PC			
TC	C108/G6	ORMC	PC					
TC	C142/D1	PC	ORMC/IRMC					
TC	C313/F1	MTFC	CM	TLC	TL	OGT		
TC	D134/D1	PC	ORMC/IRMC					
TC	D210/G6	PC	IRMC					
TC	D629/G6	CM	TLC	TL	IT	RSW		
TC	D706/C5	RSW	IT	TL	TLC	CM		
TCA	C108/A8	MTRC	PC					
TCA	C142/A3	PC	MTC	JLK				
TCA	D134/A3	PC	MTRC	JLK				
TCA	D210/A8	PC	MTRC					
TCB	C108/A8	PC	MTRC					
TCB	C142/C3	PC	MTC	JLK				
TCB	D134/C3	PC	MTRC	JLK				
TCB	D210/A8	MTRC	PC					
TCH	D306/H3	CM	MTFC					
TCHK	B415/H2	MTC	MTFC	DTM				
TCHK	C525/H2	MTC	MTFC	CM				
TCHK	D617/H2	CM	MTFC	MTC				
TCH0-9	B412/D2	MTC	MTFC	DTM				
TCH0-9	C522/C2	MTC	MTFC	CM				
TCH0-9	D614/C2	MTC	MTFC	CM				
TCK1	D629/E1	CM	MTFC					
TC1	B104/D2	MTC	MTFC	DTM	LLMC	LL	PC	
TC1	C108/H6	ORMC	PC					
TC1	C142/E1	MTFC	PC	ORMC/IRMC				
TC1	D134/E1	MTFC	PC	ORMC/IRMC				
TC1	D210/H6	MTFC	PC	IRMC				
TDCT	B502/G4	MTC	MTFC	DTM				
TDCT	C604/D3	CM	MTFC	MTC				
TDCT	D704/D3	CM	MTFC	MTC				
TER	C108/D1	MTFC	CM					
TER	D210/E1	CM	MTFC					
TF	C309/F9	TL	IAO					
TF	D106/G1	IR	IRL					
TF	D107/G1	IR	IRL					
TF	D130/B3	IR	IRL					
TF0-9	D109/A5-F5	IRL	IR					
TF0-9	D123/A5-F5	IRL	IR					
TF0,1,2,4,7	C306/F6	CM	MTFC	MTC				
TF0,1,2,4,7	D211/D0-F0	IR	IRMC	CM	MTFC	MTC		
TF0,1,2,4,7	D304/E7	MTC	MTFC	CM	IRMC	IR		
TG	C215/C4	OS	OSC	CM				
TGT	C215/B9	CM	MTFC					
TGT	C605/D6	CM	MTFC					
TG0-19	C308/A9	CM	MTFC					
TG0-19	C309/E6	CM	TLC	TL				
TG0-5	B105/B4-G4	MTFC	DTM					
TG0-5	B209/D6-G6	DTM	TLC	TL				
THGT0-9	B107/D2	MTC	MTFC	DTM				
TIN	D306/B3	CM	MTFC					
TK	B415/G2	MTFC	DTM					
TK	C525/G2	MTFC	CM					
TK	D617/G2	CM	MTFC					
TLA	C142/C6	JLK	MTC					
TLA	D134/C6	JLK	MTRC					
TLB	C142/G6	JLK	MTC					
TLB	D134/G6	JLK	MTRC					
TLF	B204/A0	JLK	TLC	DTM				
TLH	B423/F7	MTC	MTFC	DTM				
TLH	C533/F7	MTC	MTFC	CM				
TLH	D625/F7	CM	MTFC	MTC				
TM	B110/B0	MTC	MTFC	DTM				
TM	B110/F6	DTM	LLMC					
TM	B503/A9	OR	PC					
TM	B608/F4	MTC	MTFC	PRT	B609/D0	PRTC		
TM	B611/D0	PRTC	OR					
TM	C106/B0	MTC	MTFC	CM				
TM	C106/F6	CM	ORMC					
TM	C108/E7	PC	OR					
TM	C142/F0	PC	OR/IR					
TM	C213/B5,E5	OS	OSL	OGT/IAOT				
TM	C824/E2	M AMPL	T TERM					
TM	D131/C5	IR	PC					
TM	D134/F0	PC	OR/IR					

DESIG	LOCATION	FROM CIRCUIT	TO/FROM CIRCUIT OR LOCATION					
TM	D206/B0	MTC	MTFC	CM				
TM	D206/F6	CM	IRMC					
TM	D210/E7	IR	PC					
TMB	B303/G2	CM	PCMB					
TMB	C405/G1	CM	PCMB					
TMB	D409/G1	CM	PCMB					
TMB	D505/G1	PCMB	CM					
TN	D411/B3	CM	MTFC					
TN	D706/C6	RSW	IT					
TNGA	D420/E6	CM	MTC					
TN1	D411/A8	CM	NGC	NG				
TOG	D210/C1	CM	MTFC					
TOS0-4	C206/B6,C6	MTC	MTFC	CM				
TP	B503/H4	OR	ORMC	CM	MTFC			
TP	C113/C2	MTC	MTFC	CM	ORMC	OR		
TP	C212/H8	CM	OSC	OS				
TP	C313/A6	CM	TLC	TL	OGT			
TP	D629/A6	CM	TLC	TL	IT			
TP	D706/C8	IT	TL	TLC	CM			
TP	D805/C1	IT	TL	TLC	CM			
TP'	C313/A1	MTC	MTFC	CM				
TP'	D629/B1	CM	MTFC	MTC				
TP'	D805/D3	CM	MTFC					
TR	B611/D1	F-REG	PRT					
TR	C615/F3	MFCS	OS					
TRA	B421/B6	MTFC	TLC	TL				
TRB	B502/H5	MTFC	DTM					
TRB	B611/B3	PRT	MTFC					
TRB	C607/D7	MTFC	CM					
TRB	D709/D7	CM	MTFC					
TRB1	B502/H2	JLK	MTFC					
TRB1	B611/B5	MTFC	JLK					
TRB1	C607/D7	MTFC	JLK					
TRB1	D709/D7	MTFC	JLK					
TRC	C106/G7	ORMC	PC					
TRC	C155/D8	AMRST	MTFC					
TRC	C607/A2	TRC	MTFC					
TRC	D206/H6	PC	IRMC					
TRC	D709/A2,C2	TRC	MTFC/PRF					
TRK	B106/F1	MTC	MTFC	DTM	LLMC	LL		
TRK	B611/A3	PRT	MTFC					
TRK	C108/E1	MTC	MTFC	CM	ORMC	PC		
TRK	D210/E1	MTC	MTFC	CM	IRMC	PC		
TRK	D306/G3	MTC	MTFC	CM	IRMC	PC		
TRL	B106/C1	MTC	MTFC	DTM	LLMC	LL		
TRL	C107/B2	MTC	MTFC	CM	ORMC	PC		
TRL	D207/B2	MTC	MTFC	CM	IRMC	PC		
TRR	B502/D4	MTC	MTFC	DTM				
TRR	C605/D5	CM	MTFC	MTC				
TRR	D705/D5	CM	MTFC	MTC				
TRS	B106/A1	MTC	MTFC	DTM	LLMC	LL		
TRS	B611/B1	PRTC	PRT	MTFC	MTC			
TRS	C108/F1	MTC	MTFC	CM	ORMC	PC		
TRS	D210/F1	MTC	MTFC	CM	IRMC	PC		
TRST	B502/H5	MTFC	DTM					
TRST	B611/C3	PRT	MTFC					
TRST	C148/F5	AMRST	MTFC					
TRST	C607/B7	MTFC	CM					
TRST	D709/B7	CM	MTFC					
TRS1	B611/D1	PRTC	PRT					
TRT	B110/C8	MISC	DTM					
TRT	B425/F4	MTC	MTFC	DTM				
TRT	B611/F6	MISC	PRT					
TRT	C106/C8	MISC	CM					
TRT	C535/E4	MTC	MTFC	CM				
TRT	D206/C8	MISC	CM					
TRT	D627/E4	CM	MTFC	MTC				
TR1	B502/G4	MTC	MTFC	DTM				
TR1	C605/D4	CM	MTFC	MTC				
TR1	D705/D4	CM	MTFC	MTC				
TR2	B106/E1	MTC	MTFC	DTM	LLMC	LL		
TR2	B611/A1	PRTC	PRT	MTFC	MTC			
TR2	C108/E1	MTC	MTFC	CM	ORMC	PC		
TR2	D210/F1	MTC	MTFC	CM	IRMC	PC		
TSE	B208/F6	DTM	MTFC					
TSE	C308/B9	CM	MTFC					
TSE1,2	B208/F6,G6	DTM	MTFC	MTC				

ISSUE 5	DWG SIZE C2
LEAD INDEX	
A408	SFD-10-01
BELL LABORATORIES	

PRINTED IN U.S.A.

DESIG	LOCATION	FROM CIRCUIT	TO/FROM CIRCUIT OR LOCATION		
TSE1,2	C308/G8	CM	MTFC	MTC	
TSK	B209/B5	MTC	MTFC	TLC	TL
TSK	C309/B5	MTC	MTFC	TLC	TL
TSR	C214/E7	MTFC	CM	OSC	
TSR1	C214/F7	CM	OSC		
TST	B209/B5	MTC	MTFC	TLC	TL
TST	C309/B5	MTC	MTFC	TLC	TL
TST	D114/D5	IR	IRMC	CM	
TST	D131/E6	CM	IRMC	IR	
TSX	B417/G6	TL	TLC	DTM	
TSX	C311/G6	CM	TLC	TL	
TSX	C527/G6	CM	TLC	TL	
TSX	D307/G6	CM	TLC	TL	
TSX	D619/H6	CM	TLC	TL	
TS0-19	C308/B9	CM	MTFC		
TS0-9	B208/A6-D6	DTM	MTFC		
TT	C310/B6	CM	TLC	TL	TRK
TTA	C310/D6	MTFC	TLC	TL	
TTC	C310/D9	TL	TRK		
TTC	C313/G1	MTC	MTFC	CM	
TTC	D629/G1	MTC	MTFC	CM	
TTC1	C313/G1	MTC	MTFC	CM	
TTC1	D629/G1	MTC	MTFC	CM	
TTF	B408/G7	TLC	DTM	MTFC	
TTF	C510/G7	TLC	CM	MTFC	
TTF	D610/F9	TLC	CM	MTFC	
TTG	C310/C4	CM	MTFC		
TTK	C310/C4	CM	MTFC		
TTK	C310/F9	TL	MTC		
TTM	C310/C6	MTFC	TLC	TL	
TTT	B425/D4	MTC	MTFC	DTM	
TTT	C535/C4	MTC	MTFC	CM	
TTT	D627/C4	CM	MTFC	MTC	
TT0-19	C309/B2-D2	MTC	CM		
TT0-9	B209/B2-D2	MTC	DTM		
TT1	B503/C9	OR	PRTD		
TVFT0-4	B107/F2	MTC	MTFC	DTM	
TVGT0-11	B107/B2	MTC	MTFC	DTM	
TVT	C211/H6	MTFC	CM	OSC	OS
T0-9	D410/D6-G6	CM	MTFC		
T0,1	D415/B3	MTC	MTFC		
T0,1	D417/D2	MTFC	CM		
T0G	C108/C1	MTFC	CM		
T1,2	C617/F5	SR	IR		
T1,2	C824/F9,H9	TT	JLK		
T1,2	D111/E5	SR	IR		
T2	C616/D8	MDF	JLK		
T2	C626/D8	MDF	JLK		
T2	D110/D8	MDF	JLK		
T2	D1241/C7	MDF	OGT JK		
UK	D411/F3	MTFC	CM	NGC	NG
U0-9	D413/D7-F7	MTFC	CM	NGC	NG
U0,1,2,4,7	D415/B3	MTC	MTFC		
U0,1,2,4,7	D417/D2	MTFC	CM		
VF'0-4	B426/F6,G6	DTM	MTFC		
VF'0,1,2,4,7	C114/D3	MTFC	CM		
VFT0-4	B107/G3	MTFC	DTM	LLMC	LL
VFT0-4	C403/F0	MTC	MTFC	CM	
VFT0-4	D417/F2	CM	MTFC	D416/F9	MTC
VF0-4	B426/F6-H6	DTM	TLC	ORLM	
VF0-4	C150/D2	AMRST	MTFC	CM	ORMC
VF0-4	D414/E7	NG	NGC	CM	
VF0,1,2,4,7	C114/D2	MTC	MTFC	CM	ORMC
VF0,1,2,4,7	C114/D2	MTC	MTFC	CM	OSCOR
VF0,1,2,4,7	C114/D2	MTC	MTFC	CM	OS
VG'0,1,2,4,7,10	B426/B6-D6	DTM	MTFC		
VG'0,1,2,4,7,10	C114/F3	CM	MTFC		
VGA	B107/C2	MTC	MTFC	DTM	
VGA0-11	B107/C6	DTM	LLMC	LL	
VGB0-11	B30-/H7	DTM	LLC	LL	
VGB0-11	B305/H6	DTM	LLC	LL	
VGB0-11	C406/G5	CM	LLC	LL	
VGB0-11	C407/H6	CM	LLC	LL	
VGB0-11	C409/C3	LL	LLC	CM	
VGB0-11	C411/F1	CM	LLC	LL	
VGB0-11	D507/C3	LL	LLC	CM	
VGB0-11	D509/F1	CM	LLC	LL	

DESIG	LOCATION	FROM CIRCUIT	TO/FROM CIRCUIT OR LOCATION			
VGB0-11	D510/G6	CM	LLC	LL		
VGB0-11	D511/H6	CM	LLC	LL		
VGT	D417/D2	MTFC	CM			
VGT0-11	B107/C3	MTFC	DTM	LLMC	LL	
VGT0-11	C403/D0	MTC	MTFC	CM		
VGT0-11	D417/D2	CM	MTFC	D416/D9	MTC	
VG0-11	D414/D7	NG	NGC	CM		
VG0,1,2,4,7,10	B426/A6-D6	DTM	TLC	ORLM		
VG0,1,2,4,7,10	C114/F2	MTC	MTFC	CM	ORMC	
VG0,1,2,4,7,10	C114/F2	MTC	MTFC	CM	OSCOR	
VG0,1,2,4,7,10	C114/F2	MTC	MTFC	CM	OS	
VG0,1,2,4,7,10	C150/B2	AMRST	MTFC	CM	ORMC	OR
VTK1	B107/D3	MTFC	DTM			
VTK1	C403/G6	CM	MTFC			
VTK	D417/G7	CM	MTFC			
V0-4	B304/A7	DTM	LLC	LL		
V0-4	B305/B6	DTM	LLC	LL		
V0-4	C406/B5	CM	LLC	LL		
V0-4	C407/B6	CM	LLC	LL		
V0-4	D510/B6	CM	LLC	LL		
V0-4	D511/B6	CM	LLC	LL		
W	D411/F8	CM	NGC	NG		
WA	C207/F4	OS	OSGR			
WA	C615/G5	OSGR	OS			
WA	C624/G7	OSGR	OS	TL	OGT	MDF
WF	D414/D3	CM	NGC	NG		
WG	D414/C3	CM	NGC	NG		
WL	D414/B3	CM	NGC	NG		
WSD	B202/E1	MTC	DTM			
WT	B111/A4	DTM	MTFC			
WT	C137/E3	MTFC	CM			
WT	D215/E3	CM	MTFC			
XAB	C525/G2	MTFC	CM			
XAB	D617/G2	CM	MTFC			
XAN	C107/C2	MTFC	CM			
XAN	C109/E7	CM	MTFC			
XAN	D115/E7	CM	MTFC			
XAN	D207/C2	CM	MTFC			
XBT	B106/A2	MTFC	DTM			
XBT	B207/G7	DTM	MTFC			
XBT	C107/C2	MTFC	CM			
XBT	C109/B7	CM	MTFC			
XBT	C111/F4	MTFC	CM			
XBT	D115/B7	CM	MTFC			
XBT	D207/C2	MTFC	CM			
XCH	B207/B7	DTM	MTFC			
XCH	B414/H9	DTM	MTFC			
XCH	C109/D5	CM	MTFC			
XCH	C524/H9	CM	MTFC			
XCH	D115/D5	CM	MTFC			
XCH	D616/H9	CM	MTFC			
XCKR	C108/E1	MTFC	CM			
XCKR	C109/C7	CM	MTFC			
XCKR	D115/D7	CM	MTFC			
XCKR	D210/F1	CM	MTFC			
XCL	B105/H4	MTFC	DTM			
XCL	B207/C7	DTM	MTFC			
XCL	C109/A7	CM	MTFC			
XCL	C505/G0	MTFC	CM			
XCL	D115/A7	CM	MTFC			
XCL	D605/G0	CM	MTFC			
XCLC	C109/C7	CM	MTFC			
XCLC	C110/G4	MTFC	CM			
XCLC	D115/C7	CM	MTFC			
XCLC	D208/H4	CM	MTFC			
XCP	C109/A5	CM	MTFC			
XCP	D115/A5	CM	MTFC			
XCR	C109/F5	CM	MTFC			
XCR	D115/F5	CM	MTFC			
XCS	B207/B7	DTM	MTFC			
XCS	B428/D0	MTFC	DTM			
XCS	C109/F5	CM	MTFC			
XCS	C406/B3	MTFC	CM			
XCS	D115/F5	CM	MTFC			
XCS	D510/B3	MTFC	CM			
XDL	C109/B7	CM	MTFC			
XDL	D115/B7	CM	MTFC			

DESIG	LOCATION	FROM CIRCUIT	TO/FROM CIRCUIT OR LOCATION			
XF	B207/C7	DTM	MTFC			
XF	B410/F3	MTFC	DTM			
XF	C109/D5	CM	MTFC			
XF	C520/F6	CM	MTFC			
XF	D115/D5	CM	MTFC			
XF	D612/G5	CM	MTFC			
XFT	C109/F5	CM	MTFC			
XFT	C304/C1-C9	TL	TLC	CM		
XFT	C304/E0	CM	MTFC	MTC		
XFT	D115/F5	CM	MTFC			
XFUT	D414/F0	CM	MTFC			
XFUT	D418/B9	CM	MTFC			
XHG	B107/G3	MTFC	DTM			
XHG	B207/D7	DTM	MTFC			
XHG	C109/D5	CM	MTFC			
XHG	D115/E5	CM	MTFC			
XJC	B207/D7	DTM	MTFC			
XJC	B411/F9	DTM	MTFC			
XJC	C109/A7	CM	MTFC			
XJC	C521/F9	CM	MTFC			
XJC	D115/A7	CM	MTFC			
XJC	D613/F9	CM	MTFC			
XJG	B207/D7	DTM	MTFC			
XJG	C109/E5	CM	MTFC			
XJG	D115/E5	CM	MTFC			
XJS	B207/D7	DTM	MTFC			
XJS	B417/H0	MTFC	DTM			
XJS	C109/E5	CM	MTFC			
XJS	C527/H0	MTFC	CM			
XJS	D115/E5	CM	MTFC			
XJS	D619/H0	CM	MTFC			
XLC	B207/E7	DTM	MTFC			
XLC	B403/G0	DTM	MTFC			
XLC	B418/H7	MTFC	DTM			
XLC	B419/G7	MTFC	DTM			
XLC	C109/E5	CM	MTFC			
XLC	C528/H6	MTFC	CM			
XLC	C529/H6	MTFC	CM			
XLC	D115/E5	CM	MTFC			
XLC	D620/H6	CM	MTFC			
XLC	D621/H6	CM	MTFC			
XLG	B107/G3	MTFC	DTM			
XLG	B207/E7	DTM	MTFC			
XLG	C109/E5	CM	MTFC			
XLG	C409/C7	CM	MTFC			
XLG	D115/E5	CM	MTFC			
XLG	D507/C7	CM	MTFC			
XLH	B420/A9	MTFC	DTM			
XLO	B306/F5	CM	MTFC			
XLO	C109/A5	CM	MTFC			
XLO	C408/F1	MTFC	CM			
XLO	D115/B5	CM	MTFC			
XLR	B207/E7	DTM	MTFC			
XLR	B410/E3	MTFC	DTM			
XLR	C109/C7	CM	MTFC			
XLR	C110/G4	MTFC	CM			
XLR	C520/E6	CM	MTFC			
XLR	D115/C7	CM	MTFC			
XLR	D208/H4	CM	MTFC			
XLR	D612/E5	CM	MTFC			
XLS	B207/G7	DTM	MTFC			
XLS	B416/H4	DTM	MTFC			
XLS	C109/F5	CM	MTFC			
XLS	C526/H4	CM	MTFC			
XLS	D115/G5	CM	MTFC			
XLS	D618/H4	CM	MTFC			
XLV	B207/E7	DTM	MTFC			
XLV	C109/E5	CM	MTFC			
XLV	C411/H4	LL	ALL			
XLV	D115/F5	CM	MTFC			
XLV0-9	C411/H4	LL	ALL			
XLV0-9	D509/H4	LL	ALL	LL		
XMB	C211/D6	CM	MTFC			
XMRL	C107/C2	MTFC	CM			
XMRL	C109/E7	CM	MTFC			
XMRL	D115/E7	CM	MTFC			
XMRL	D207/C2	CM	MTFC			

LEAD INDEX

DWG SIZE	ISSUE
C2	5

BELL LABORATORIES | SFD-10-01 | A409

PRINTED IN U.S.A.

DESIG	LOCATION	FROM CIRCUIT	TO/FROM CIRCUIT OR LOCATION					
XN	C109/B5	CM	MTFC					
XN	D115/B5	CM	MTFC					
XN	D407/G9	CM	MTFC					
XOB	C109/B5	CM	MTFC					
XOB	C111/F4	MTFC	CM					
XOB	D115/B5	CM	MTFC					
XPG	B207/C7	DTM	MTFC					
XPG	B403/G0	DTM	MTFC					
XPG	C109/A7	CM	MTFC					
XPG	C505/G0	MTFC	CM					
XPG	D115/A7	CM	MTFC					
XPG	D605/G0	CM	MTFC					
XPT	C107/E2	MTFC	CM					
XPT	C109/D7	CM	MTFC					
XPT	C216/A8	CM	MTFC					
XPT	D115/D7	CM	MTFC					
XRL	C107/E2	MTFC	CM					
XRL	C109/D7	CM	MTFC					
XRL	D115/D7	CM	MTFC					
XRS	C109/G5	CM	MTFC					
XRS	D115/G5	CM	MTFC					
XRS1	C109/B5	CM	MTFC					
XRS1	D115/B5	CM	MTFC					
XRS1	D415/H6	CM	MTFC					
XS	C109/A5	CM	MTFC					
XS	C207/B2	OSC	CM					
XS	C207/D8	CM	MTFC					
XS	D115/A5	CM	MTFC					
XSA	C109/C5	CM	MTFC					
XSA	C207/B2	OSC	CM					
XSA	C207/D8	CM	MTFC					
XSA	D115/C5	CM	MTFC					
XSL	B207/G7	DTM	MTFC					
XSL	B423/F8	MTFC	DTM					
XSL	C533/F4	MTFC	CM					
XSL	D625/F4	CM	MTFC					
XSS	C109/C5	CM	MTFC					
XSS	D115/C5	CM	MTFC					
XT	C109/D7	CM	MTFC					
XT	C110/F4	MTFC	CM					
XT	D115/E7	CM	MTFC					
XT	D208/H4	CM	MTFC					
XTB	C308/H8	CM	MTFC					
XTB1	C109/C5	CM	MTFC					
XTB1	D115/C5	CM	MTFC					
XTC	B207/A7	MTFC	DTM					
XTC1	B207/A7	DTM	MTFC					
XTG	C309/G6	CM	MTFC					
XTG1	B207/B7	DTM	MTFC					
XTG1	B209/H6	DTM	MTFC					
XTG1	C109/C5	CM	MTFC					
XTG1	C309/H6	CM	MTFC					
XTG1	D115/D5	CM	MTFC					
XTRK	B106/H2	MTFC	DTM					
XTRK	B207/G7	DTM	MTFC					
XTRK	C108/E1	MTFC	CM					
XTRK	C109/C7	CM	MTFC					
XTRK	D115/C7	CM	MTFC					
XTRK	D210/F1	CM	MTFC					
XTRL	B106/A2	MTFC	DTM					
XTRL	B207/H7	DTM	MTFC					
XTRL	C107/A2	MTFC	CM					
XTRL	C109/D7	CM	MTFC					
XTRL	C110/F4	MTFC	CM					
XTRL	D115/D7	CM	MTFC					
XTRL	D207/A2	CM	MTFC					
XTRL	D208/G4	CM	MTFC					
XTS	B207/F7	DTM	MTFC					
XTS	B417/H0	MTFC	DTM					
XTS	C109/G5	CM	MTFC					
XTS	C527/H0	MTFC	CM					
XTS	D115/G5	CM	MTFC					
XTS	D619/H0	CM	MTFC					
XTS1	B207/F7	DTM	MTFC					
XTS1	B407/H0	DTM	MTFC					
XTS1	C109/A5	CM	MTFC					
XTS1	C527/H0	CM	MTFC					

DESIG	LOCATION	FROM CIRCUIT	TO/FROM CIRCUIT OR LOCATION					
XTS1	D115/A5	CM	MTFC					
XTS1	D619/H0	CM	MTFC					
XTV	C109/B7	CM	MTFC					
XTV	C111/F4	MTFC	CM					
XTV	D115/B7	CM	MTFC					
XTS	C109/C5	CM	MTFC					
XTS	C211/H3	CM	MTFC					
XTS	D115/C5	CM	MTFC					
XVGA	B107/C3	MTFC	DTM					
XVGA	B207/B7	DTM	MTFC					
XVGB	B207/F7	DTM	MTFC					
XVGB	B304/H6	DTM	MTFC					
XVGB	C109/F5	CM	MTFC					
XVGB	C406/A3	MTFC	CM					
XVGB	C407/A3	MTFC	CM					
XVGB	C409/E7	CM	MTFC					
XVGB	D115/F5	CM	MTFC					
XVGB	D507/E7	CM	MTFC					
XVGB	D510/A3	MTFC	CM					
XVGB	D511/A3	MTFC	CM					
XX	B608/D6	MTFC	PRT					
XYGB	B305/H5	DTM	MTFC					
X11	C704/A0	OR	ORMC	CM				
X11	C704/A2	MTFC	CM					
0	C150/A5-D5	AMRST	SR					
0	C616/G9	OS	MFCS					
0	D110/G9	OS	MFCS					
0	D112/D9	SR	D113/D0	IR				
0NN	D306/B3	MTC	MTFC	CM	TLC	TL		
1	C150/D5	AMRST	SR					
1	C616/G9	OS	MFCS					
1	D110/G9	OS	MFCS					
1	D112/D9	SR	D113/D0	IR				
1SE	C216/A1	TL	TLC	CM	MTFC			
1SE	D306/B3	MTC	MTFC	CM	TLC	TL		
10	C616/G9	OS	MFCS					
10	D110/G9	OS	MFCS					
10	D112/D9	SR	D113/D0	IR				
10LV	B410/E1	DTM	TLC					
10LV	C520/E1	TLC	CM					
10LV	D612/E1	TLC	CM					
11	B603/E5	OR	PRTC	PRT	MTFC	MTC		
11	C110/E3	MTC	MTFC	CM	ORMC	OR		
12LV	B410/F1	DTM	TLC					
12LV	C520/E1	TLC	CM					
12LV	D612/E1	TLC	CM					
2	C150/D5	AMRST	SR					
2	C616/G9	OS	MFCS					
2	D110/G9	OS	MFCS					
2	D112/D9	SR	D113/D0	IR				
2P	B429/F4	MTFC	DTM	TLC	OR			
2P	B503/F6	OR	TLC	DTM				
2SA	C216/B1	TL	TLC	CM	MTFC			
2SA	D306/C3	MTC	MTFC	CM	TLC	TL		
3NA	C216/B1	TL	TLC	CM	MTFC			
3NA	D306/C3	MTC	MTFC	CM	TLC	TL		
4	C150/D5	AMRST	SR					
4	C616/G9	OS	MFCS					
4	D110/G9	OS	MFCS					
4	D112/D9	SR	D113/D0	IR				
4DG	C212/F9	OS	OSC	CM	MTFC			
4NE	C216/B1	TL	TLC	CM	MTFC			
4NE	D306/D3	MTC	MTFC	CM	TLC	TL		
5DG	C212/F9	OS	OSC	CM	MTFC			
5ST	C216/C1	TL	TLC	CM	MTFC			
5ST	D306/D3	MTC	MTFC	CM	TLC	TL		
6NT	C216/C1	TL	TLC	CM	MTFC			
6NT	D306/E3	MTC	MTFC	CM	TLC	TL		
7	C150/D5	AMRST	SR					
7	C616/G9	OS	MFCS					
7	D110/G9	OS	MFCS					
7	D112/D9	SR	D113/D0	IR				
7RN	C216/D1	TL	TLC	CM	MTFC			
7RN	D306/E3	MTC	MTFC	CM	TLC	TL		
8SP	C216/D1	TL	TLC	CM	MTFC			
8SP	D306/F3	MTC	MTFC	CM	TLC	TL		
9NP	C216/E1	TL	TLC	CM	MTFC			

DESIG	LOCATION	FROM CIRCUIT	TO/FROM CIRCUIT OR LOCATION					
9NP	D306/F3	MTC	MTFC	CM	TLC	TL		

ISSUE 5	DWG SIZE C2
LEAD INDEX	
A410	SFD-10-01
BELL LABORATORIES	

PRINTED IN U.S.A.

LEAD INDEX

DESIG	LOCATION	FROM CIRCUIT	TO/FROM CIRCUIT OR LOCATION					
10LV	D612/E1	TLC	CM					
10LV	B410/E1	DTM	TLC					
10LV	C520/E1	TLC	CM					
11	C110/E3	MTC	MTFC	CM	ORMC	OR		
11	B603/E5	OR	PRTC	PRT	MTFC	MTC		
12LV	B410/F1	DTM	TLC					
12LV	C520/E1	TLC	CM					
12LV	D612/E1	TLC	CM					
2	D112/D9	SR	D113/D0	IR				
2	D110/G9	OS	MFCS					
2	C616/G9	OS	MFCS					
2	C150/D5	AMRST	SR					
2P	B429/F4	DTM	MTFC					
2P	B429/F4	DTM	TLC	OR				
2P	B503/F6	OR	TLC	DTM				
2SA	C216/B1	TL	TLC	CM	MTFC			
2SA	D306/C3	MTC	MTFC	CM	TLC	TL		
3NA	C216/B1	TL	TLC	CM	MTFC			
3NA	D306/C3	MTC	MTFC	CM	TLC	TL		
4	C150/D5	AMRST	SR					
4	C616/G9	OS	MFCS					
4	D110/G9	OS	MFCS					
4	D112/D9	SR	D113/D0	IR				
4DG	C212/E7	CM	OSC	OS				
4DG	C212/E7	CM	MTFC					
4NE	C216/B1	TL	TLC	CM	MTFC			
4NE	D306/D3	MTC	MTFC	CM	TLC	TL		
5DG	C212/F7	CM	OSC	OS				
5DG	C212/F7	CM	MTFC					
5ST	C216/C1	TL	TLC	CM	MTFC			
5ST	D306/D3	MTC	MTFC	CM	TLC	TL		
6NT	D306/E3	MTC	MTFC	CM	TLC	TL		
6NT	C216/C1	TL	TLC	CM	MTFC			
7	C150/D5	AMRST	SR					
7	C616/G9	OS	MFCS					
7	D110/G9	OS	MFCS					
7	D112/D9	SR	D113/D0	IR				
7RN	C216/D1	TL	TLC	CM	MTFC			
7RN	D306/E3	MTC	MTFC	CM	TLC	TL		
8SP	D306/F3	MTC	MTFC	CM	TLC	TL		
8SP	C216/D1	TL	TLC	CM	MTFC			
9NP	C216/E1	TL	TLC	CM	MTFC			
9NP	D306/F3	MTC	MTFC	CM	TLC	TL		

ISSUE 3

LEAD INDEX

SFD-10-01-A411

BELL TELEPHONE LABORATORIES INCORPORATED

DWG SIZE 6S

PRINTED IN U.S.A.

K-2481 (10-71)

ESTABLISHING DIALING CONNECTION

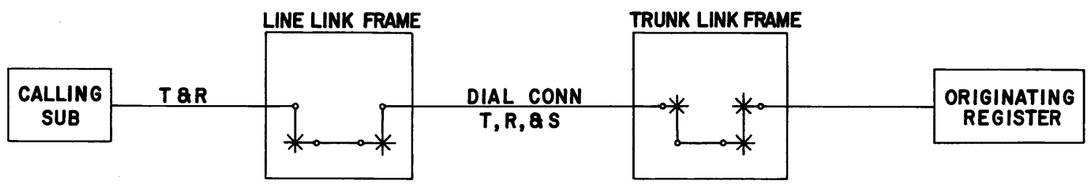

INDEX

CAUTION!

DUE TO THE SIMPLIFIED NATURE OF THIS DOCUMENT, INFORMATION SHOWN MAY NOT BE COMPLETE.

ISSUE 4

PART BO
DIAL TONE TROUBLE
CARD ANALYSIS

SFD-10-01-B001

BELL TELEPHONE LABORATORIES INCORPORATED

DWG SIZE 6S

PRINTED IN U.S.A.

SFD-10-01-B001

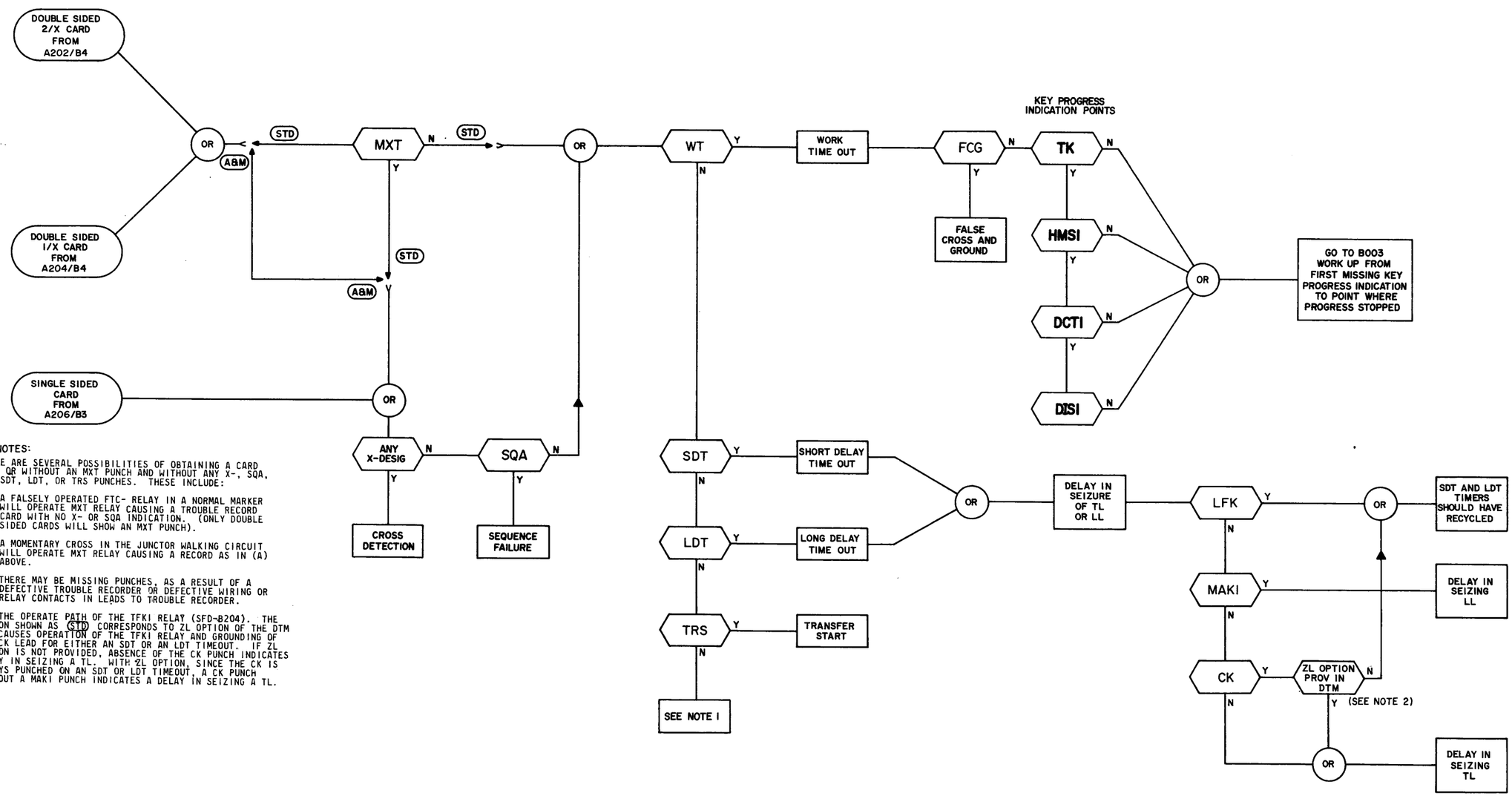

SHEET NOTES:

1. THERE ARE SEVERAL POSSIBILITIES OF OBTAINING A CARD WITH OR WITHOUT AN MXT PUNCH AND WITHOUT ANY X-, SQA, WT, SDT, LDT, OR TRS PUNCHES. THESE INCLUDE:

   A. A FALSELY OPERATED FTC- RELAY IN A NORMAL MARKER WILL OPERATE MXT RELAY CAUSING A TROUBLE RECORD CARD WITH NO X- OR SQA INDICATION. (ONLY DOUBLE SIDED CARDS WILL SHOW AN MXT PUNCH).

   B. A MOMENTARY CROSS IN THE JUNCTOR WALKING CIRCUIT WILL OPERATE MXT RELAY CAUSING A RECORD AS IN (A) ABOVE.

   C. THERE MAY BE MISSING PUNCHES, AS A RESULT OF A DEFECTIVE TROUBLE RECORDER OR DEFECTIVE WIRING OR RELAY CONTACTS IN LEADS TO TROUBLE RECORDER.

2. SEE THE OPERATE PATH OF THE TFKI RELAY (SFD-8204). THE OPTION SHOWN AS (STD) CORRESPONDS TO ZL OPTION OF THE DTM AND CAUSES OPERATION OF THE TFKI RELAY AND GROUNDING OF THE CK LEAD FOR EITHER AN SDT OR AN LDT TIMEOUT. IF ZL OPTION IS NOT PROVIDED, ABSENCE OF THE CK PUNCH INDICATES DELAY IN SEIZING A TL. WITH ZL OPTION, SINCE THE CK IS ALWAYS PUNCHED ON AN SDT OR LDT TIMEOUT, A CK PUNCH WITHOUT A MAKI PUNCH INDICATES A DELAY IN SEIZING A TL.

ISSUE 4

SFD-10-01-B002

FLOW CHART FOR ANALYSIS OF TROUBLE CARD FOR DIAL TONE CLASS OF CALL

DWG SIZE 6S

BELL TELEPHONE LABORATORIES INCORPORATED

PRINTED IN U.S.A.

SFD-10-01-B002

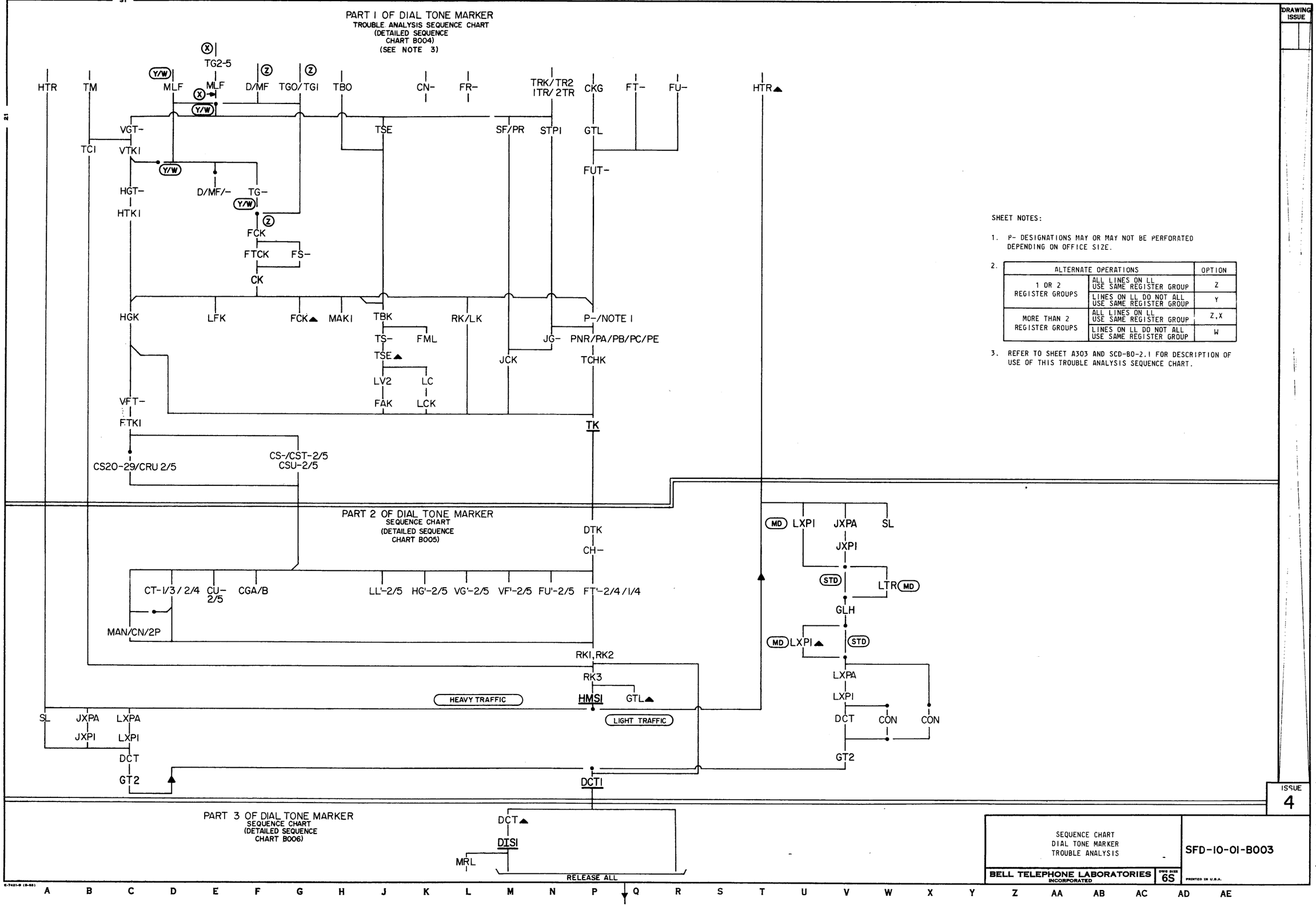

SHEET NOTES:

1. P- DESIGNATIONS MAY OR MAY NOT BE PERFORATED DEPENDING ON OFFICE SIZE.

2.

ALTERNATE OPERATIONS		OPTION
1 OR 2 REGISTER GROUPS	ALL LINES ON LL USE SAME REGISTER GROUP	Z
	LINES ON LL DO NOT ALL USE SAME REGISTER GROUP	Y
MORE THAN 2 REGISTER GROUPS	ALL LINES ON LL USE SAME REGISTER GROUP	Z,X
	LINES ON LL DO NOT ALL USE SAME REGISTER GROUP	W

3. REFER TO SHEET A303 AND SCD-B0-2.1 FOR DESCRIPTION OF USE OF THIS TROUBLE ANALYSIS SEQUENCE CHART.

PART I
DIAL TONE MARKER SEQUENCE CHART

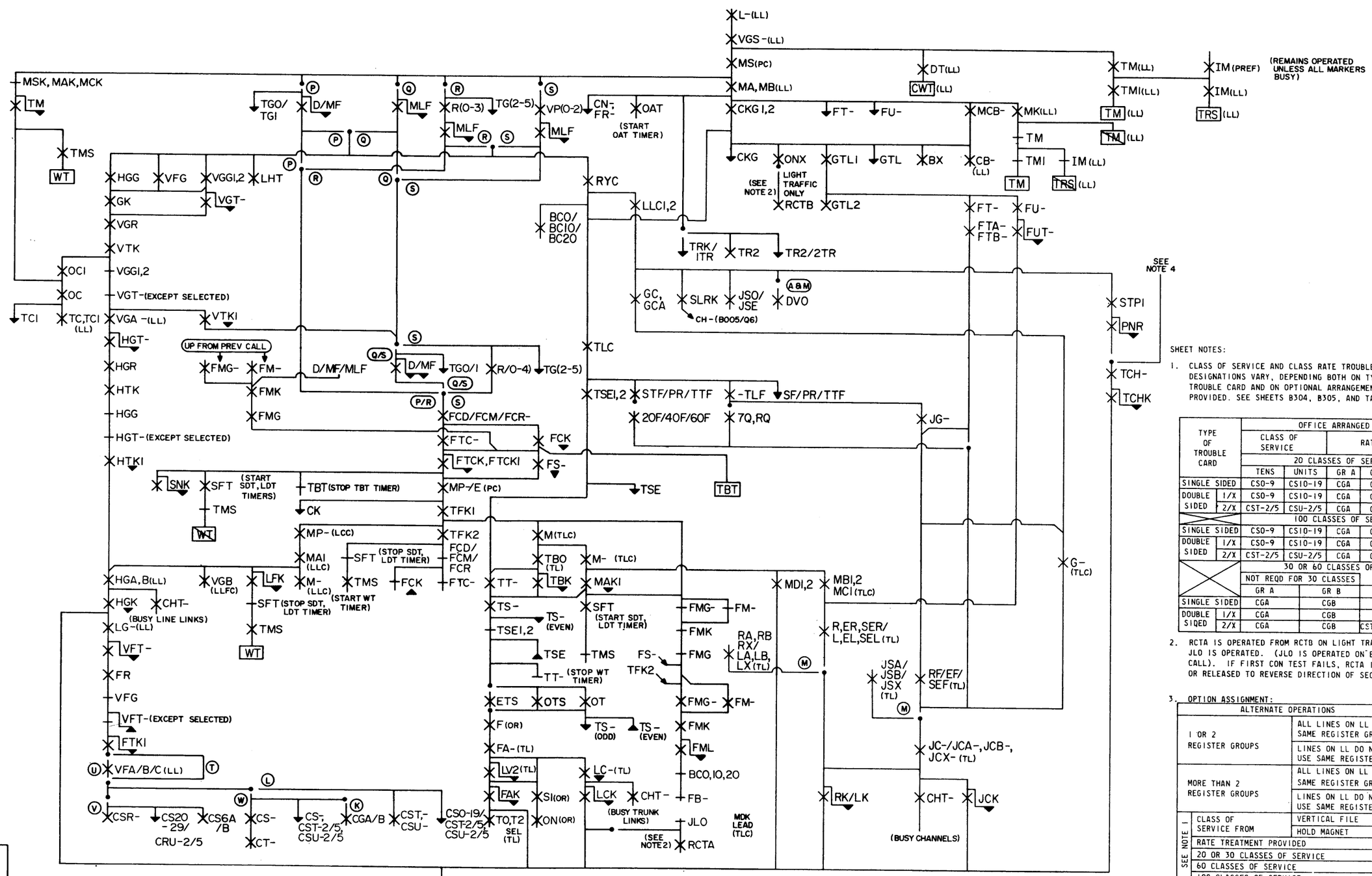

SHEET NOTES:

1. CLASS OF SERVICE AND CLASS RATE TROUBLE CARD DESIGNATIONS VARY, DEPENDING BOTH ON TYPE OF TROUBLE CARD AND ON OPTIONAL ARRANGEMENTS PROVIDED. SEE SHEETS B304, B305, AND TABLE BELOW.

TYPE OF TROUBLE CARD		OFFICE ARRANGED FOR				
		CLASS OF SERVICE		RATE CLASS		
		20 CLASSES OF SERVICE				
		TENS	UNITS	GR A	GR B	UNITS
SINGLE SIDED		CS0-9	CS10-19	CGA	CGB	CS20-29
DOUBLE SIDED	1/X	CS0-9	CS10-19	CGA	CGB	CS20-29
	2/X	CST-2/5	CSU-2/5	CGA	CGB	CRU-2/5
		100 CLASSES OF SERVICE				
SINGLE SIDED		CS0-9	CS10-19	CGA	CGB	CS20-29
DOUBLE SIDED	1/X	CS0-9	CS10-19	CGA	CGB	CS20-29
	2/X	CST-2/5	CSU-2/5	CGA	CGB	CRU-2/5
		30 OR 60 CLASSES OF SERVICE				
		NOT REQD FOR 30 CLASSES				
		GR A	GR B	CLASS 0-29		
SINGLE SIDED		CGA	CGB	CS0-29		
DOUBLE SIDED	1/X	CGA	CGB	CS0-29		
	2/X	CGA	CGB	CST-2/5	CST-2/5	

2. RCTA IS OPERATED FROM RCTB ON LIGHT TRAFFIC CALLS IF JLO IS OPERATED. (JLO IS OPERATED ON EVERY OTHER CALL). IF FIRST CON TEST FAILS, RCTA IS OPERATED OR RELEASED TO REVERSE DIRECTION OF SECOND CON TEST.

3. OPTION ASSIGNMENT:

ALTERNATE OPERATIONS			OPTION
1 OR 2 REGISTER GROUPS		ALL LINES ON LL USE SAME REGISTER GROUP	P
		LINES ON LL DO NOT ALL USE SAME REGISTER GROUP	Q
MORE THAN 2 REGISTER GROUPS		ALL LINES ON LL USE SAME REGISTER GROUP	R
		LINES ON LL DO NOT ALL USE SAME REGISTER GROUP	S
SEE NOTE 1	CLASS OF SERVICE FROM	VERTICAL FILE	T
		HOLD MAGNET	U
	RATE TREATMENT PROVIDED		V
	20 OR 30 CLASSES OF SERVICE		W
	60 CLASSES OF SERVICE		W,K
	100 CLASSES OF SERVICE		L
TRUNK LINK FRAME (SD-27879-01)			M

4. THE P- RELAYS MAY OR MAY NOT BE OPERATED DEPENDING ON OFFICE SIZE. SEE SD-26001-01, FS 18, FOR DIFFERENT PATTERN ARRANGEMENTS.

ISSUE 5

SFD-10-01-B004

PART 1 OF DIAL TONE MARKER SEQUENCE CHART

DWG SIZE 6S

BELL TELEPHONE LABORATORIES INCORPORATED

E-7481-B (10-71)

SFD-10-01-B004

PART 2
DIAL TONE MARKER SEQUENCE CHART

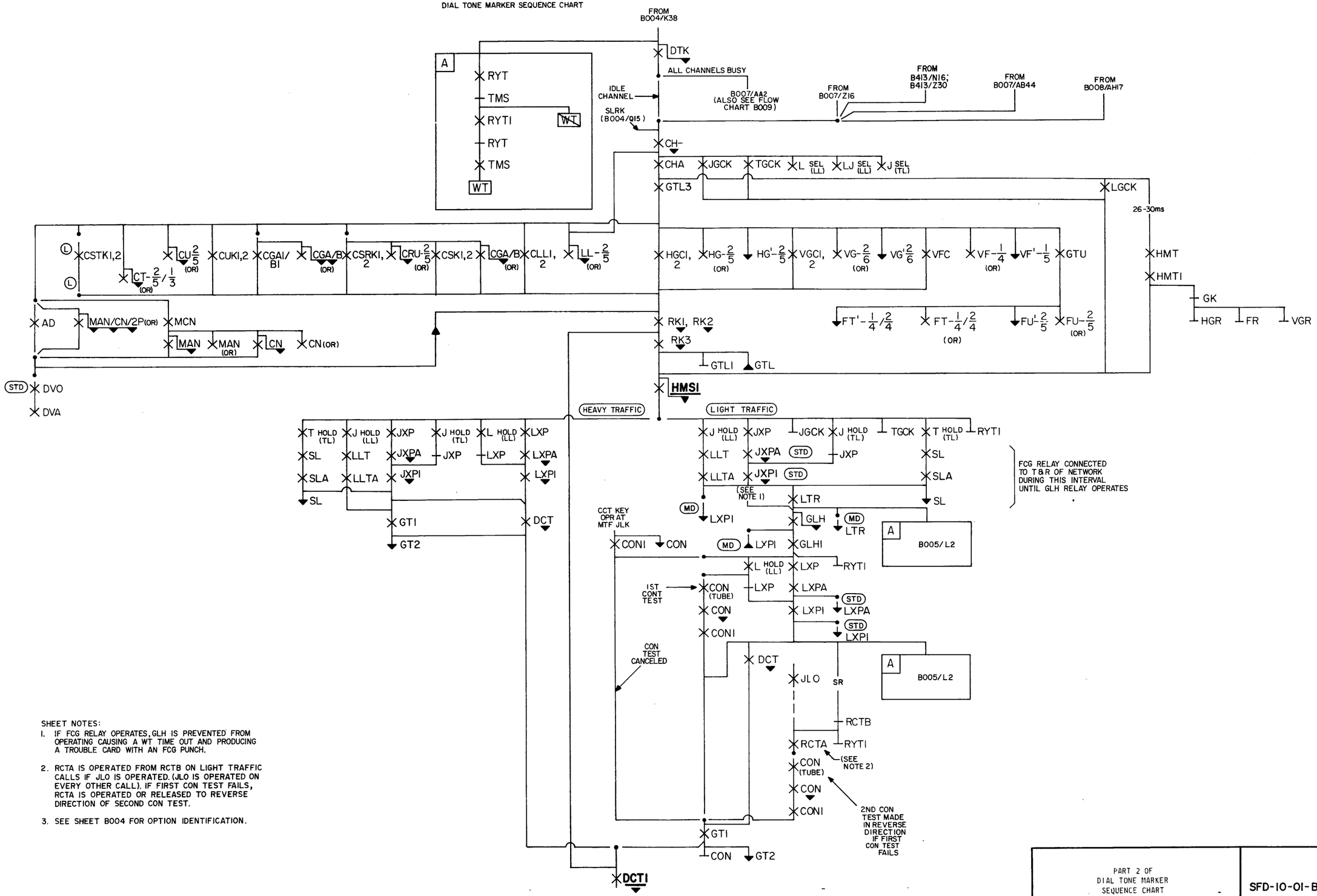

SHEET NOTES:

1. IF FCG RELAY OPERATES, GLH IS PREVENTED FROM OPERATING CAUSING A WT TIME OUT AND PRODUCING A TROUBLE CARD WITH AN FCG PUNCH.
2. RCTA IS OPERATED FROM RCTB ON LIGHT TRAFFIC CALLS IF JLO IS OPERATED. (JLO IS OPERATED ON EVERY OTHER CALL). IF FIRST CON TEST FAILS, RCTA IS OPERATED OR RELEASED TO REVERSE DIRECTION OF SECOND CON TEST.
3. SEE SHEET B004 FOR OPTION IDENTIFICATION.

DRAWING ISSUE

ISSUE 4

PART 2 OF DIAL TONE MARKER SEQUENCE CHART

SFD-10-01-B005

BELL TELEPHONE LABORATORIES INCORPORATED

DWG SIZE 6S

PRINTED IN U.S.A.

SFD-10-01-B005

PART 3
DIAL TONE MARKER SEQUENCE CHART

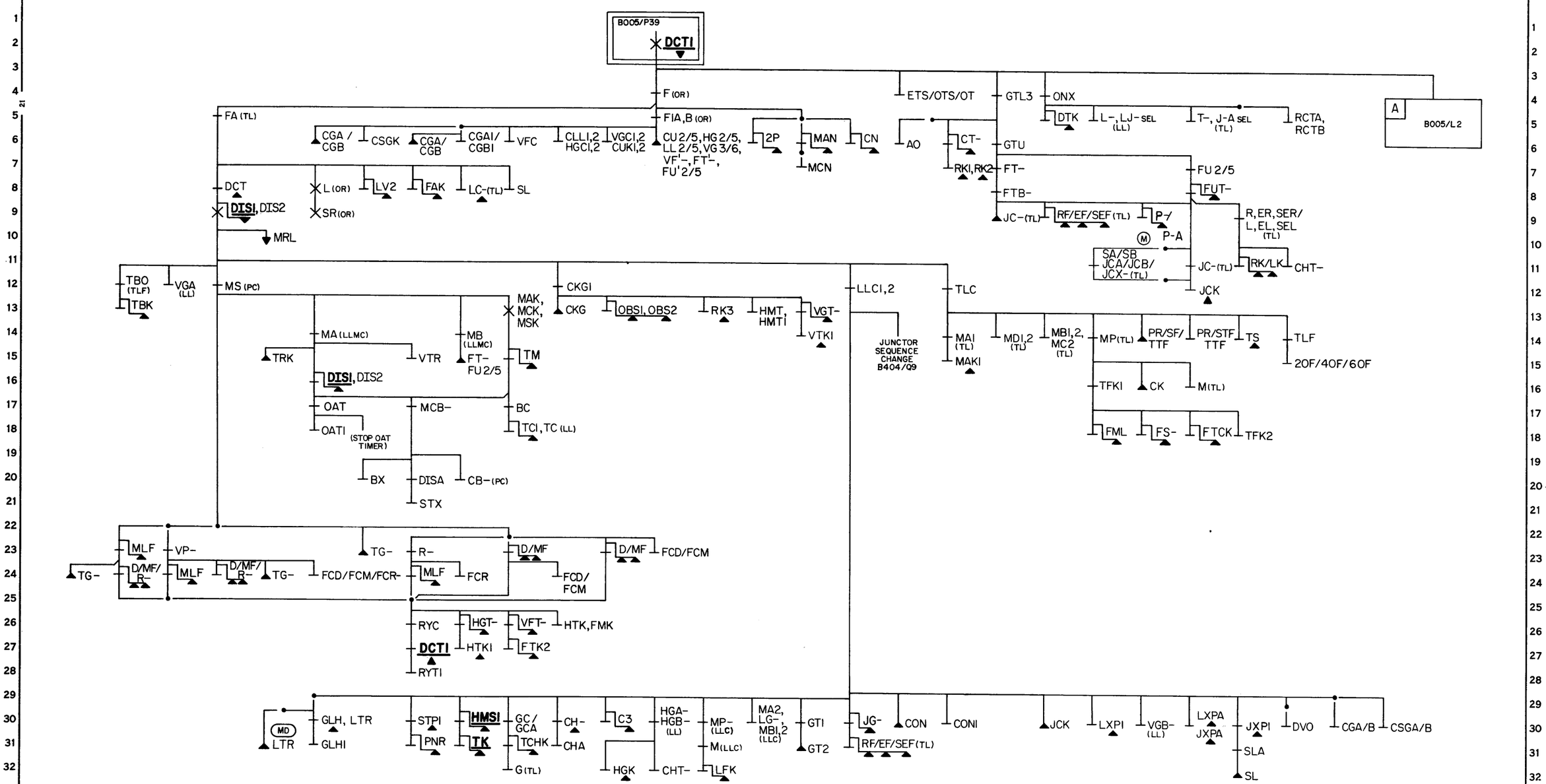

SHEET NOTES:
1. OPTION ASSIGNMENT:
(M) TRUNK LINK FRAME (SD-27879-01)

ISSUE 4

SFD-10-01-B006

PART 3 OF DIAL TONE MARKER SEQUENCE CHART

DWG SIZE 6S

BELL TELEPHONE LABORATORIES INCORPORATED

SFD-10-01-B006

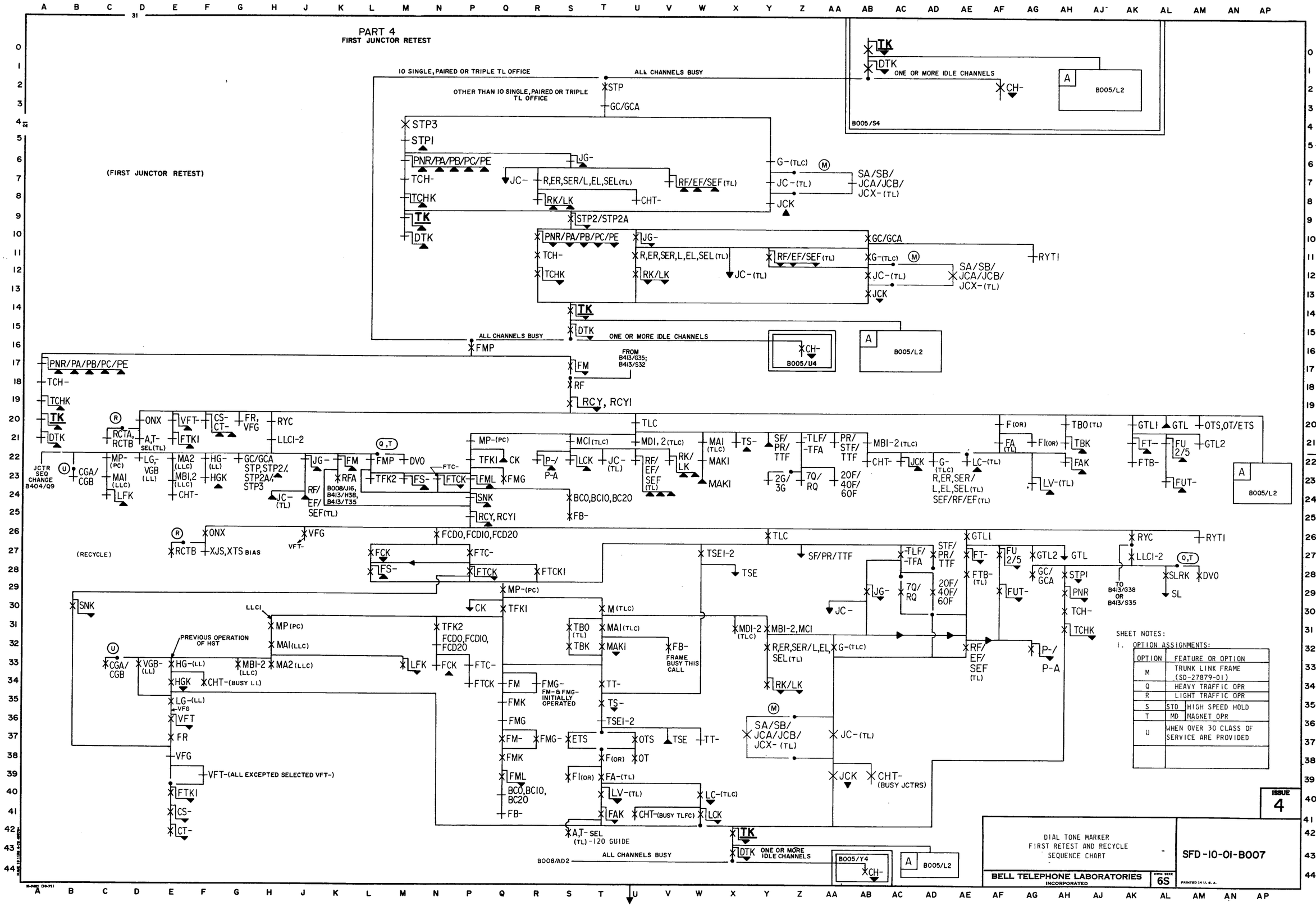

SFD-10-01-B007

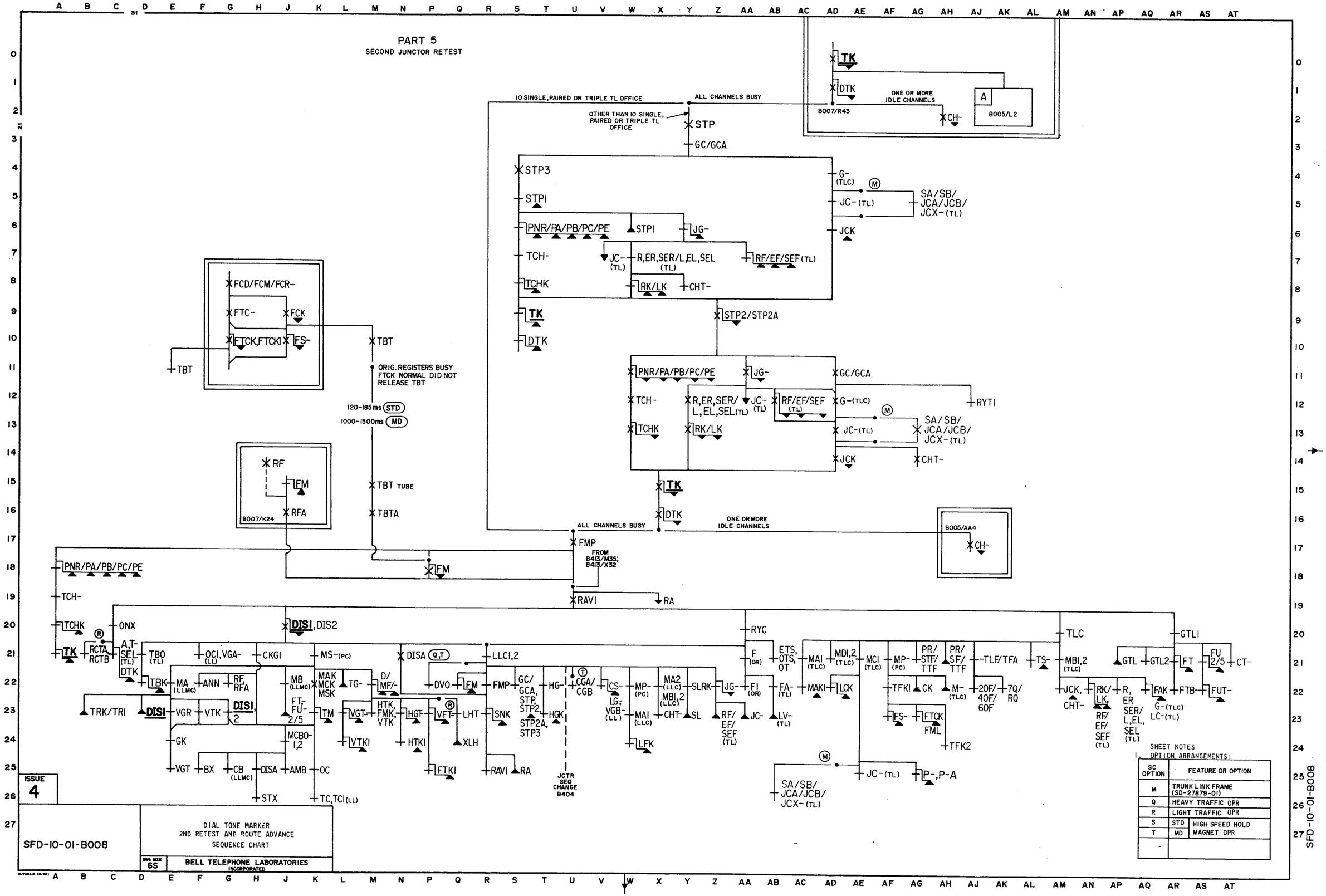
PART 5
SECOND JUNCTOR RETEST
TK
DTK
ONE OR MORE IDLE CHANNELS
B007/R43
A
B005/L2
CH-
10 SINGLE, PAIRED OR TRIPLE TL OFFICE
ALL CHANNELS BUSY
OTHER THAN 10 SINGLE, PAIRED OR TRIPLE TL OFFICE
STP
GC/GCA
STP3
STPI
PNR/PA/PB/PC/PE
JG-
TCH-
JC-(TL)
R,ER,SER/L,EL,SEL (TL)
RF/EF/SEF (TL)
TCHK
RK/LK
CHT-
G-(TLC)
JC-(TL)
JCK
SA/SB/JCA/JCB/JCX-(TL)
STP2/STP2A
RYTI
FCD/FCM/FCR-
FTC-
FCK
FTCK,FTCKI
FS-
TBT
ORIG. REGISTERS BUSY FTCK NORMAL DID NOT RELEASE TBT
120-185ms STD
1000-1500ms MD
TBT TUBE
TBTA
RF
FM
RFA
B007/K24
B005/AA4
FMP
FROM B413/M35; B413/X32
RAVI
RA
DISI, DIS2
RYC
TLC
GTLI
ONX
RCTA, RCTB
A,T-SEL (TL)
DTK
TBO (TL)
OCI,VGA- (LL)
CKGI
MS-(PC)
DISA Q,T
LLCI,2
TBK
MA (LLMC)
ANN
RF, RFA
MB (LLMC)
MAK MCK MSK
TG-
D/MF/-
DVO
FMP
GC/GCA, STP, STP2, STP2A, STP3
HG-
CGA/CGB
CS-
MP-(PC)
MA2 (LLC)
MBI,2 (LLC)
SLRK
JG-
F (OR)
ETS, OTS, OT
MAI (TLC)
MDI,2 (TLC)
MCI (TLC)
MP-(PC)
PR/STF/TTF
PR/SF/TTF
TLF/TFA
TS-
MBI,2 (TLC)
GTL
GTL2
FT
FU 2/5
CT-
TRK/TRI
DISI
VGR
VTK
DISI, 2
FT-FU-2/5
TM
VGT-
HTK, FMK, VTK
HGT
VFT
LHT
SNK
HGK
LG-VGB-(LL)
CHT-
SL
RF/EF/SEF (TL)
JC-
LV-(TL)
MAKI
LCK
TFKI
CK
M-(TLC)
20F/40F/60F
7Q/RQ
JCK,
RK/LK,
R, ER SER/L,EL, SEL (TL)
FAK
FTB
FUT-
CHT-
RF/EF/SEF (TL)
G-(TLC) LC-(TL)
GK
MCBO-1,2
VTKI
HTKI
XLH
LFK
FS-
FTCK
FML
TFK2
VGT
BX
CB (LLMC)
DISA
AMB
OC
FTKI
RAVI
RA
JCTR SEQ CHANGE B404
SA/SB/JCA/JCB/JCX-(TL)
JC-(TL)
P-,P-A
STX
TC,TCI(LL)
ISSUE 4
SFD-10-01-B008
DIAL TONE MARKER
2ND RETEST AND ROUTE ADVANCE
SEQUENCE CHART
DWG SIZE 6S
BELL TELEPHONE LABORATORIES INCORPORATED
SHEET NOTES
1. OPTION ARRANGEMENTS:
SC OPTION | FEATURE OR OPTION
M | TRUNK LINK FRAME (SD-27879-01)
Q | HEAVY TRAFFIC OPR
R | LIGHT TRAFFIC OPR
S | STD | HIGH SPEED HOLD
T | MD | MAGNET OPR
SFD-10-01-B008

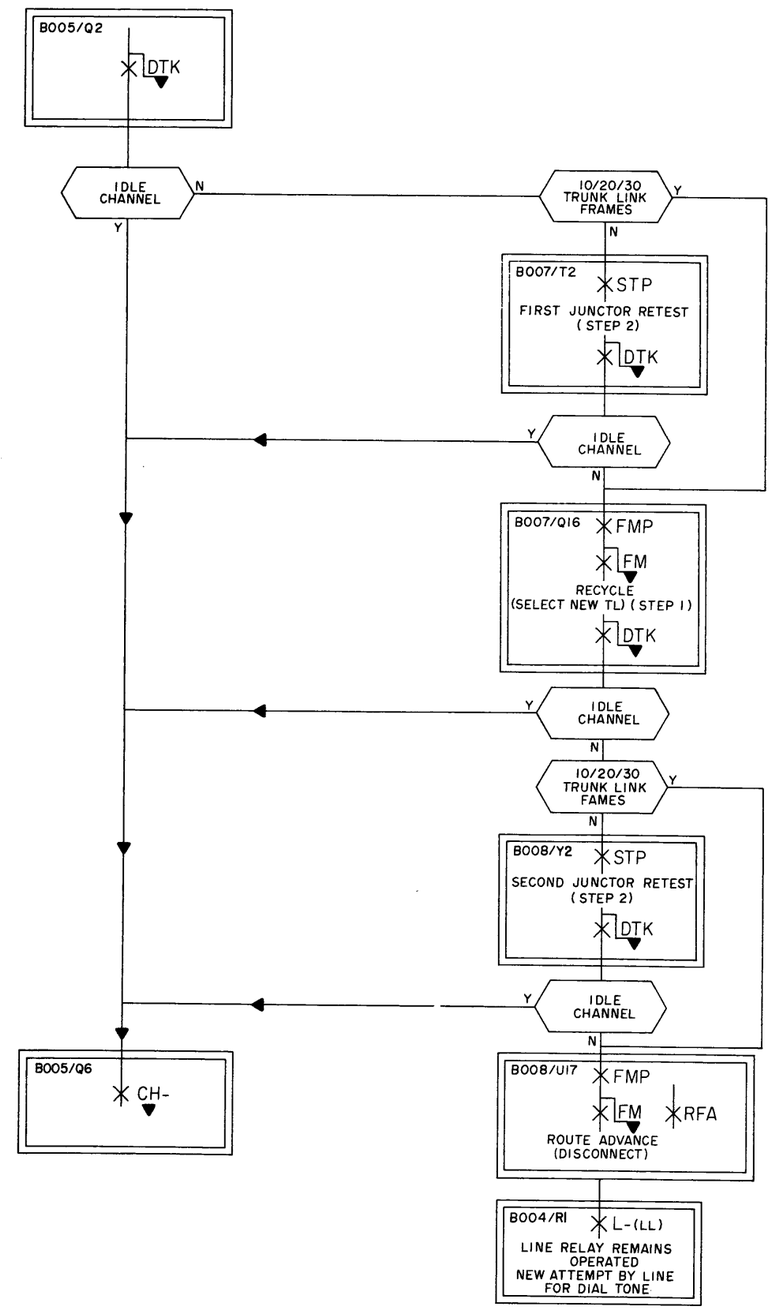

ISSUE 3

FLOW CHART SHOWING JUNCTOR RETEST, RECYCLE, AND ROUTE ADVANCE

SFD-10-01-B009

BELL TELEPHONE LABORATORIES INCORPORATED

DWG SIZE 6S

PRINTED IN U. S. A.

SFD-10-01-B009

ESTABLISHING DIALING CONNECTION

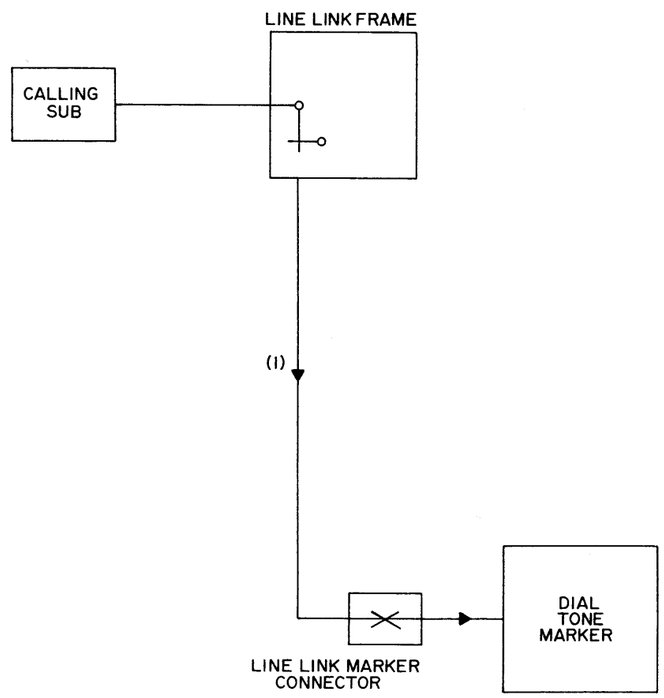

CAUTION!

DUE TO THE SIMPLIFIED NATURE OF THIS DOCUMENT, INFORMATION SHOWN MAY NOT BE COMPLETE.

INDEX

ISSUE 4

PART B1
DIAL TONE MARKER INPUT

SFD-10-01-B101

BELL TELEPHONE LABORATORIES INCORPORATED

DWG SIZE 6S

PRINTED IN U. S. A.

SFD-10-01-B101
2 SHEET, SH1

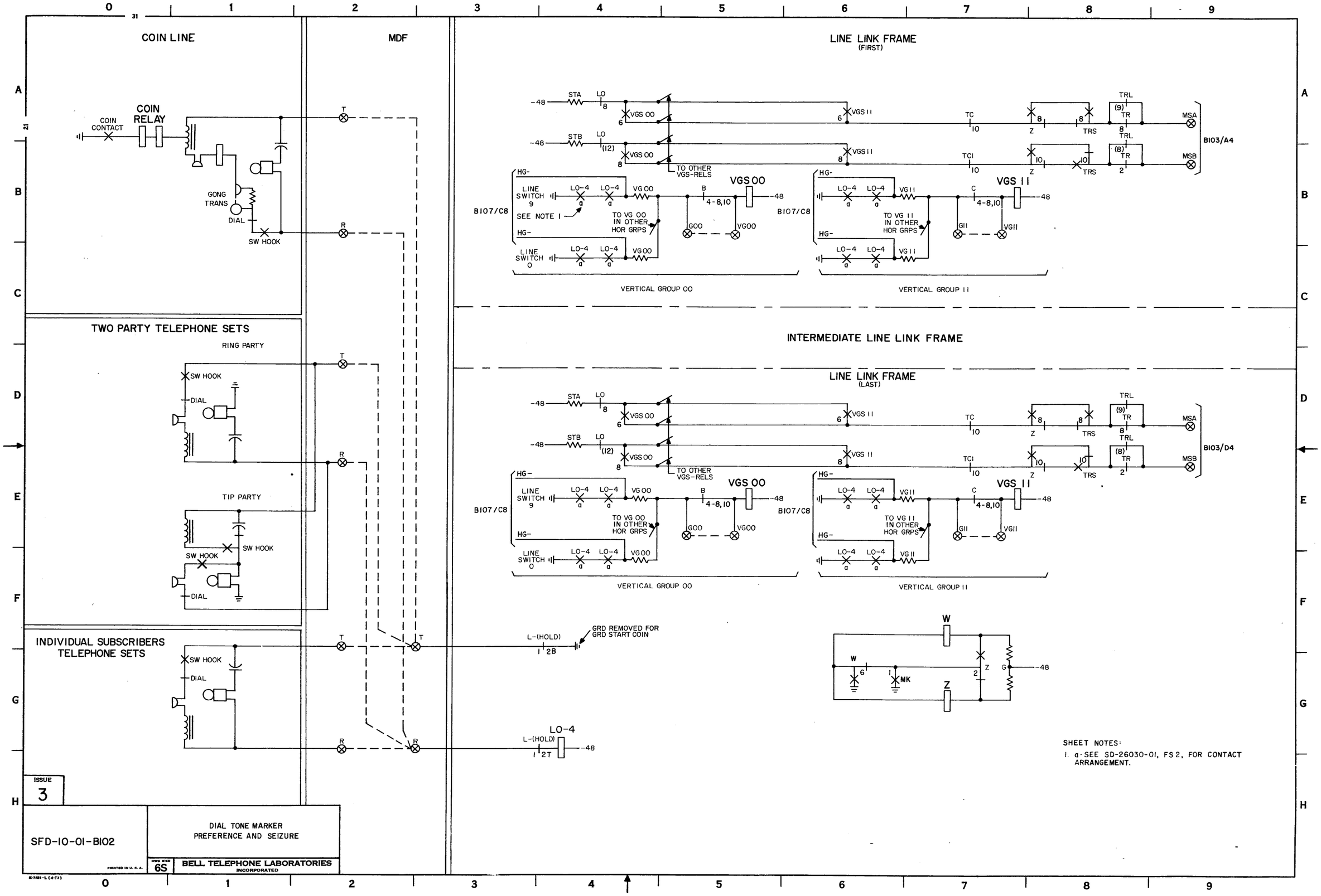
COIN LINE
COIN CONTACT
COIN RELAY
GONG TRANS
DIAL
SW HOOK
MDF
TWO PARTY TELEPHONE SETS
RING PARTY
SW HOOK
DIAL
TIP PARTY
SW HOOK
SW HOOK
DIAL
INDIVIDUAL SUBSCRIBERS TELEPHONE SETS
SW HOOK
DIAL
LINE LINK FRAME
(FIRST)
-48
STA
LO
8
VGS 00
6
VGS 11
TC
10
Z
TRS
TRL
(9)
TR
MSA
STB
(12)
TCI
(8)
MSB
B103/A4
TO OTHER VGS-RELS
HG-
LINE SWITCH 9
LO-4
VG 00
B
4-8,10
VGS 00
SEE NOTE 1
TO VG 00 IN OTHER HOR GRPS
G00
VG00
B107/C8
LINE SWITCH 0
VG 11
C
VGS 11
TO VG 11 IN OTHER HOR GRPS
G11
VG11
VERTICAL GROUP 00
VERTICAL GROUP 11
INTERMEDIATE LINE LINK FRAME
LINE LINK FRAME
(LAST)
B103/D4
L-(HOLD)
GRD REMOVED FOR GRD START COIN
2B
LO-4
2T
W
MK
Z
G
SHEET NOTES:
1. a-SEE SD-26030-01, FS 2, FOR CONTACT ARRANGEMENT.
ISSUE 3
SFD-10-01-B102
DIAL TONE MARKER PREFERENCE AND SEIZURE
DWG SIZE 6S
BELL TELEPHONE LABORATORIES INCORPORATED
PRINTED IN U. S. A.
SFD-10-01-B102

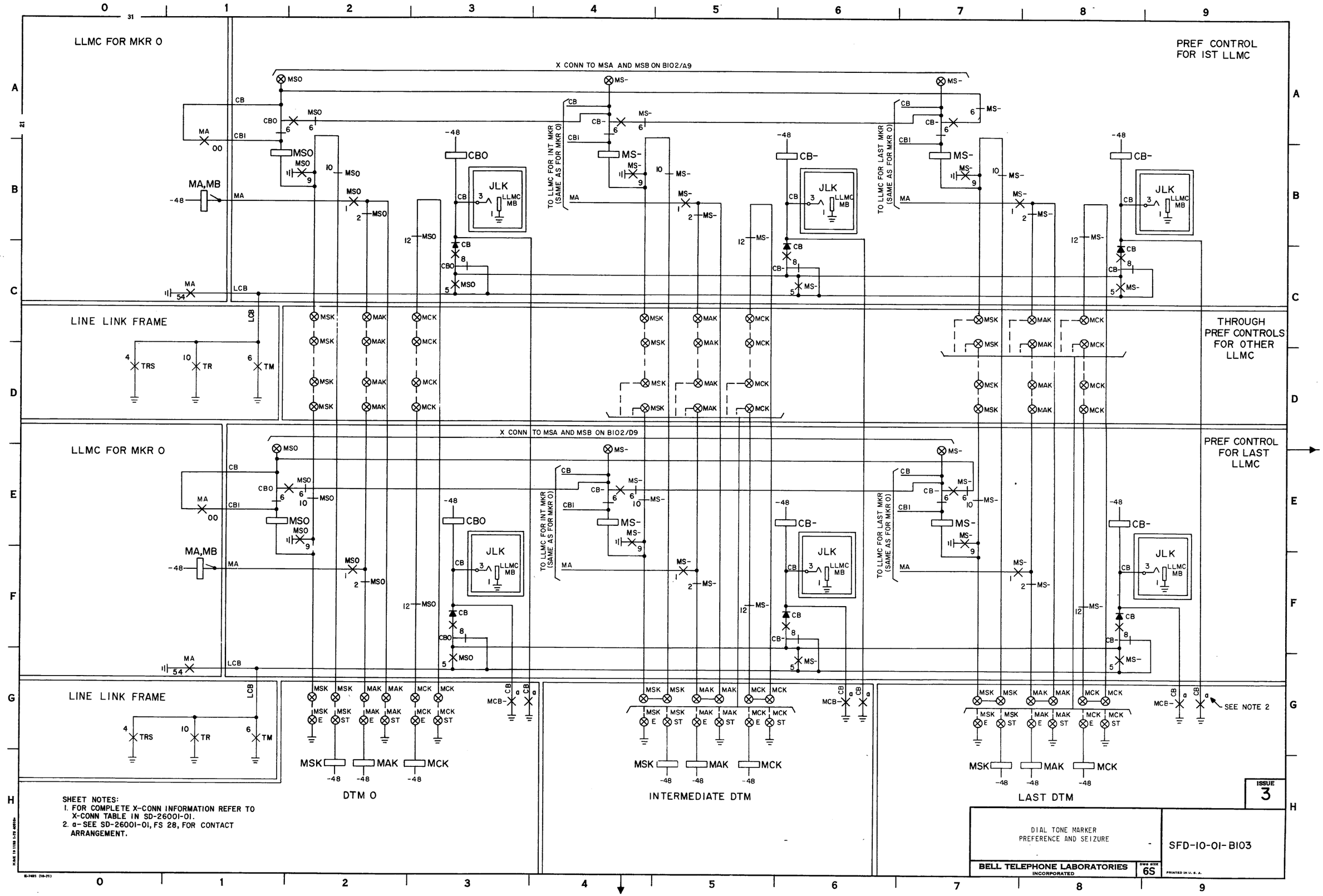

SFD-10-01-B103

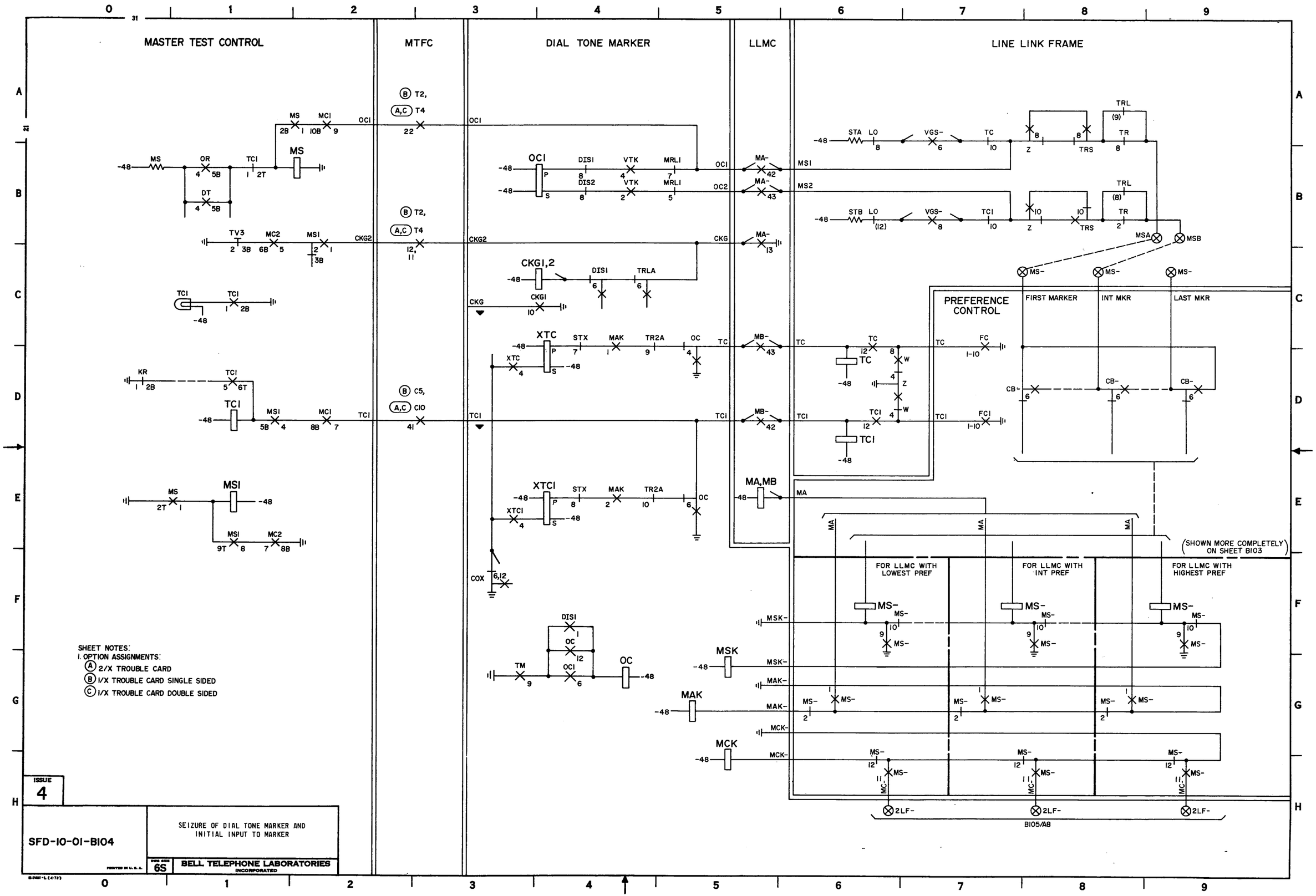

SFD-10-01-B104

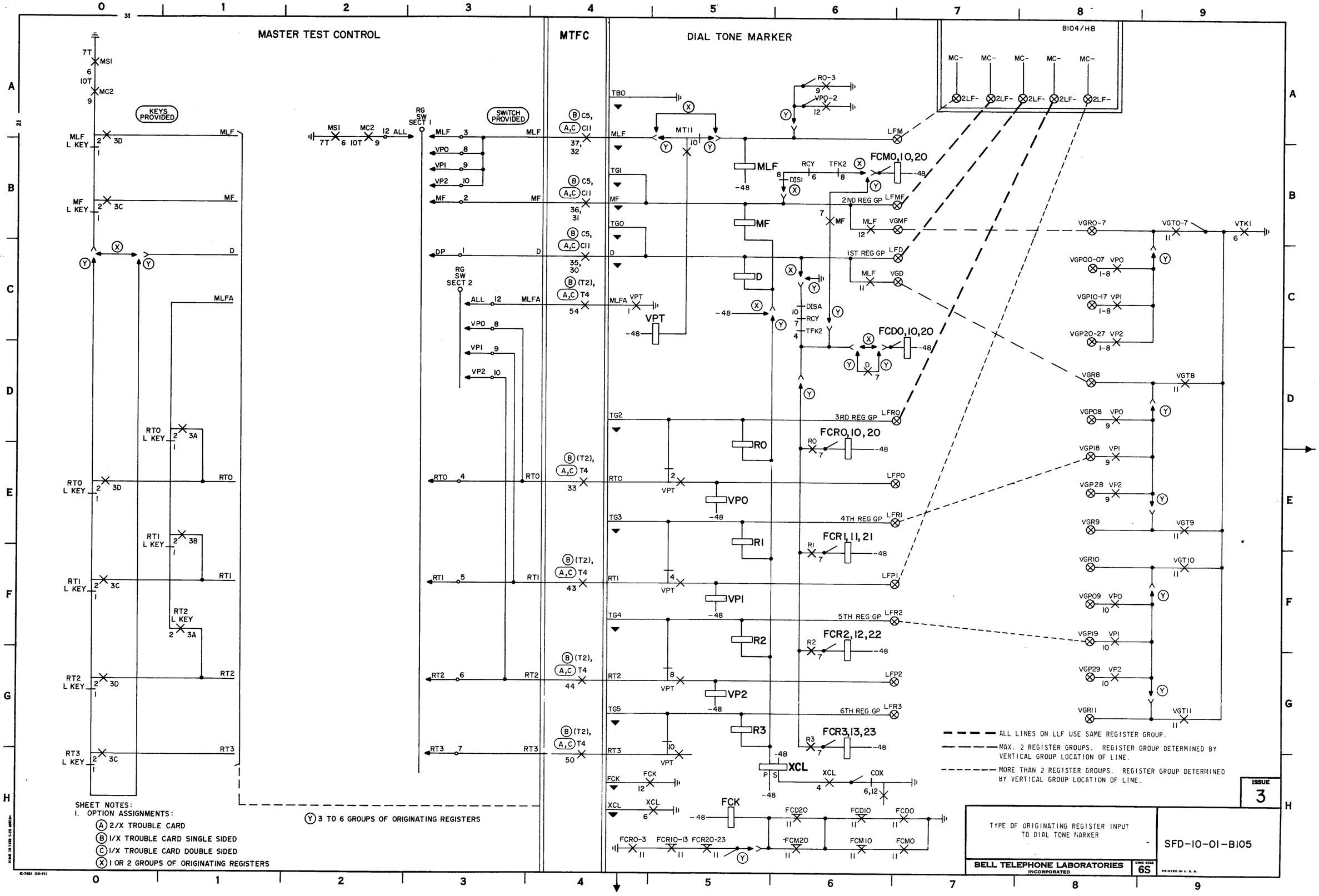

SFD-10-01-B105

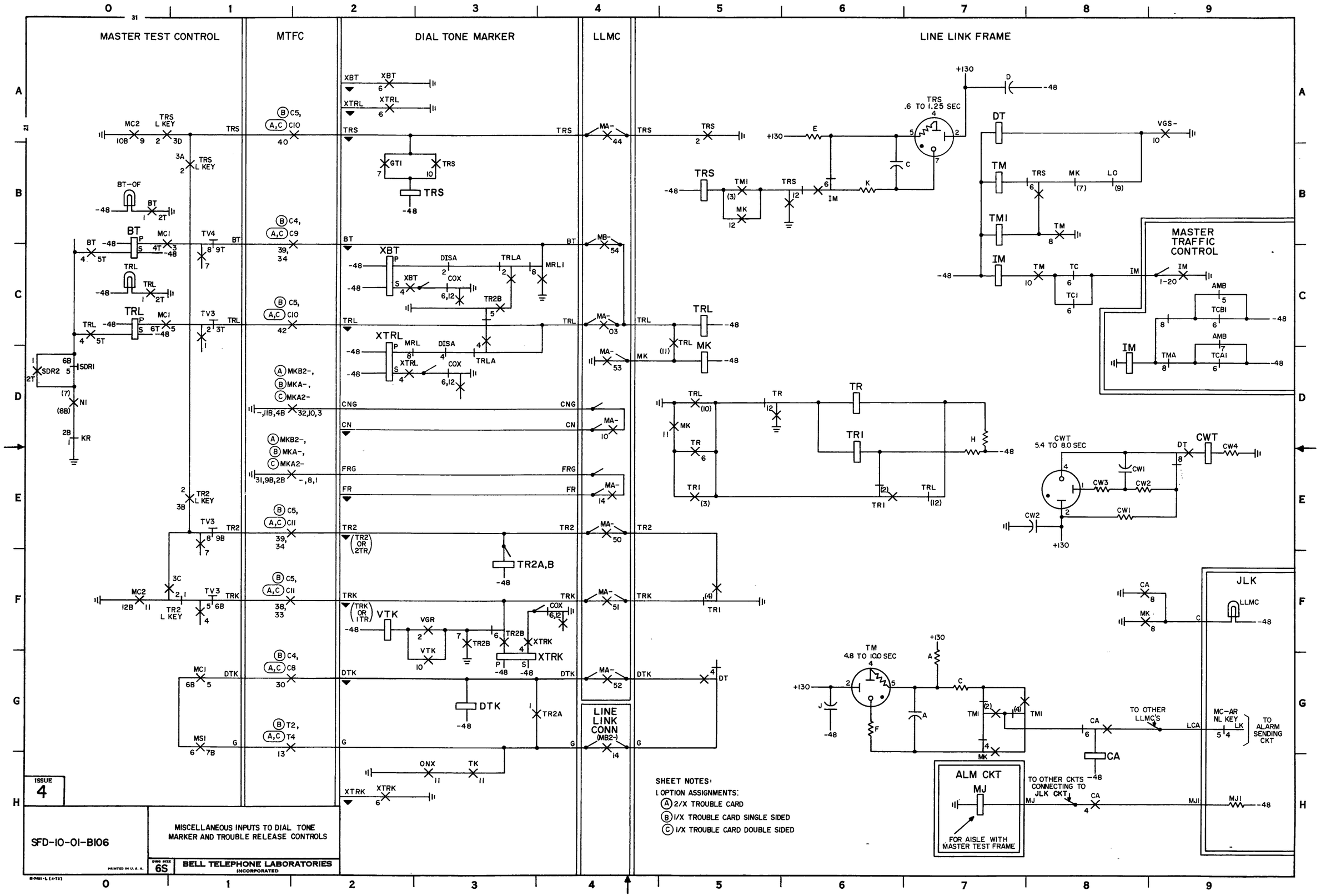

SFD-10-01-B106

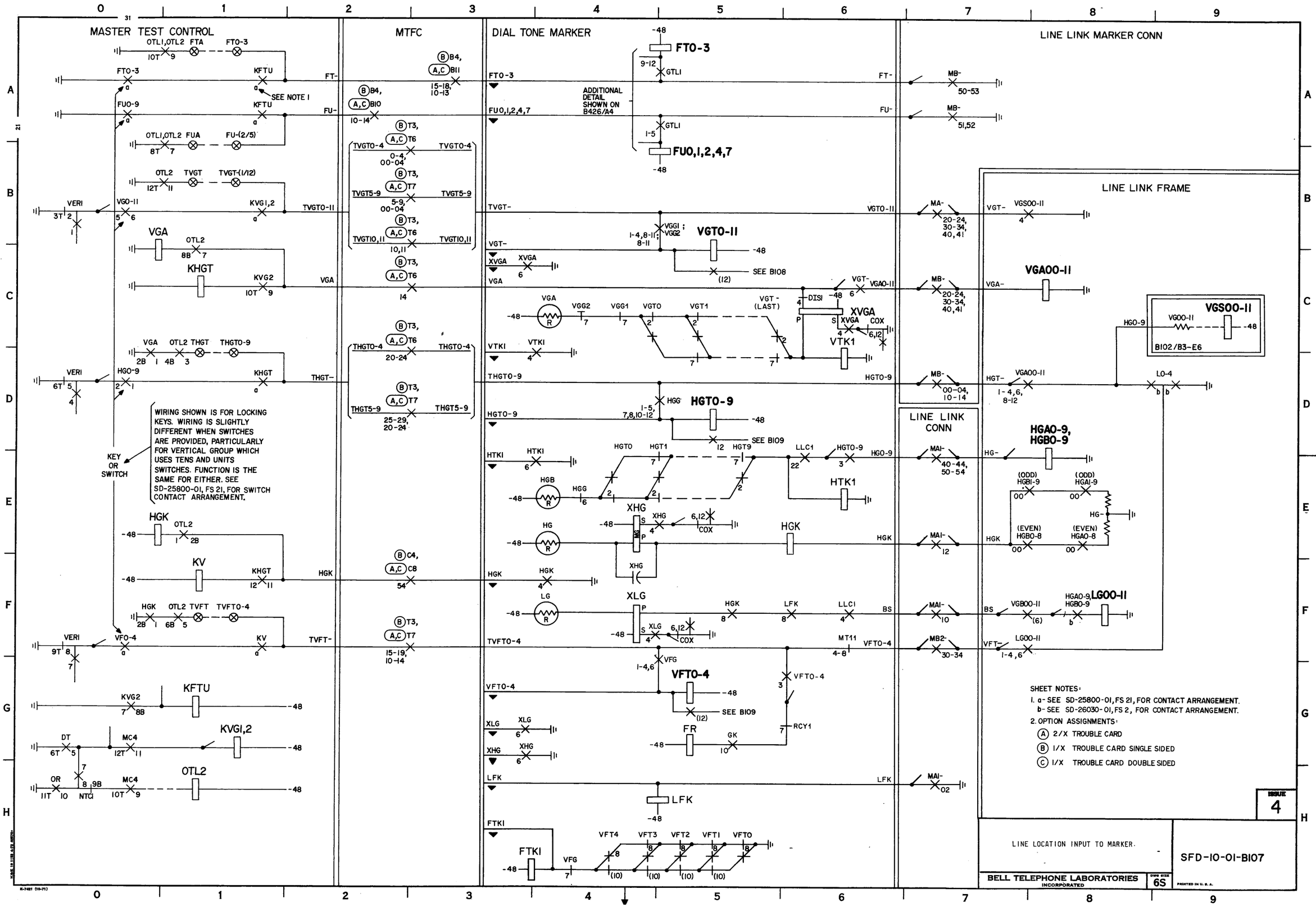

SFD-10-01-B107

DIAL TONE MARKER

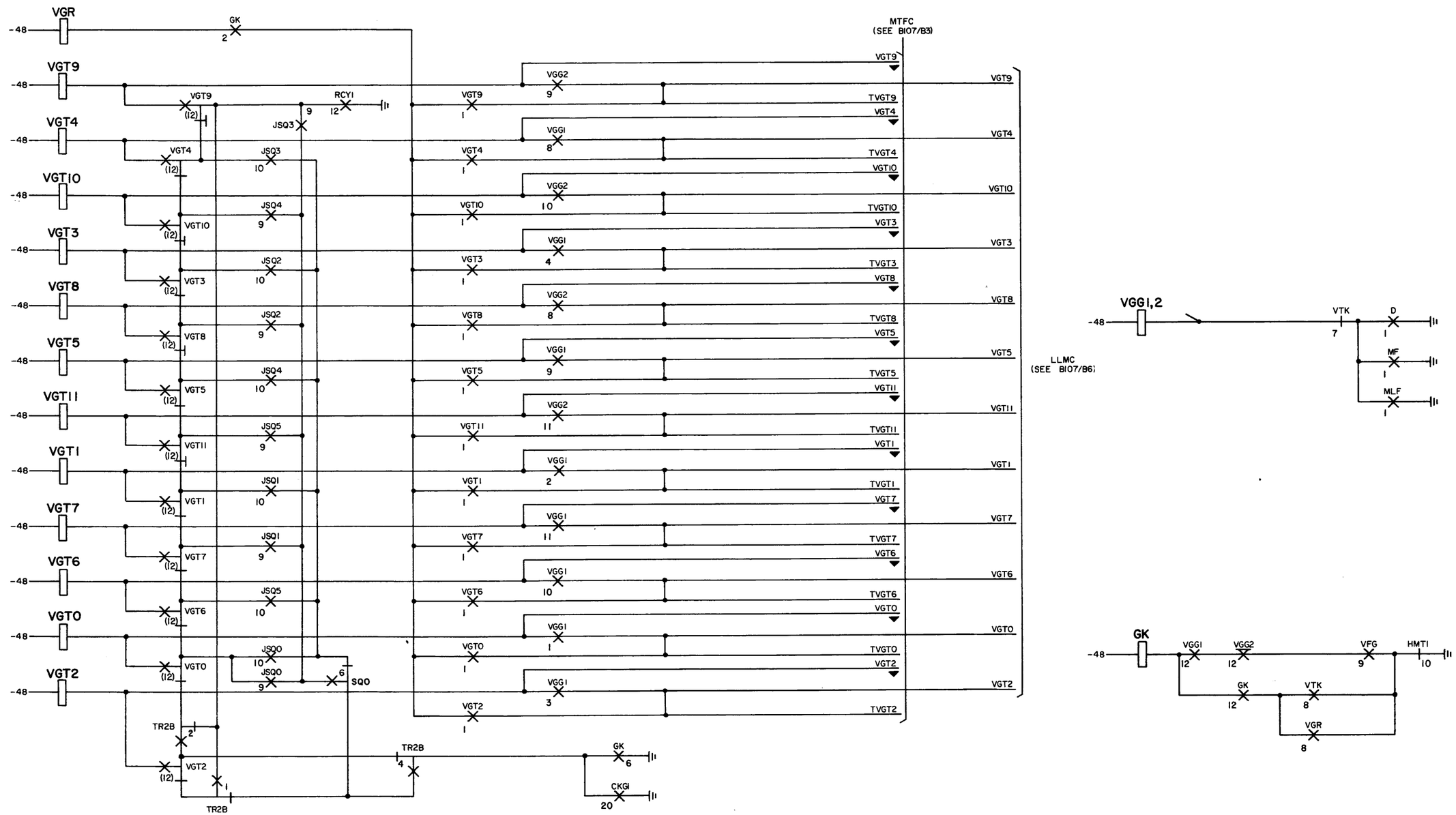

ISSUE 3

SFD-10-01-B108

VERTICAL GROUP SELECTION

PRINTED IN U. S. A.

CODE SIZE 6S

BELL TELEPHONE LABORATORIES INCORPORATED

S-2921-L (4-72)

SFD-10-01-B108

DIAL TONE MARKER

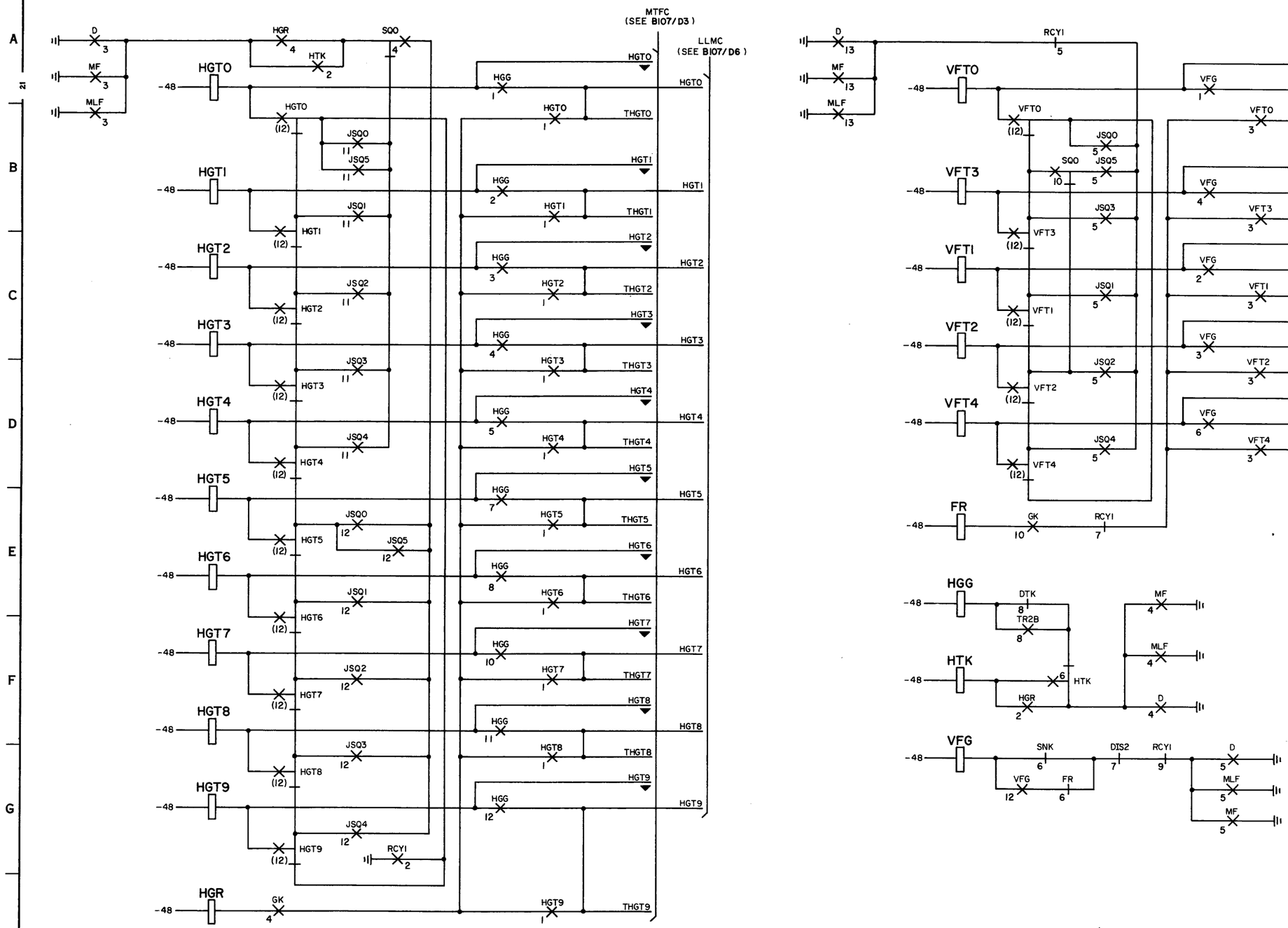

SFD-10-01-B109

ISSUE 3

HORIZONTAL GROUP AND VERTICAL FILE SELECTION

BELL TELEPHONE LABORATORIES INCORPORATED

DWG SIZE 6S

SFD-10-01-B109

PRINTED IN U.S.A.

E-7421 (10-71)

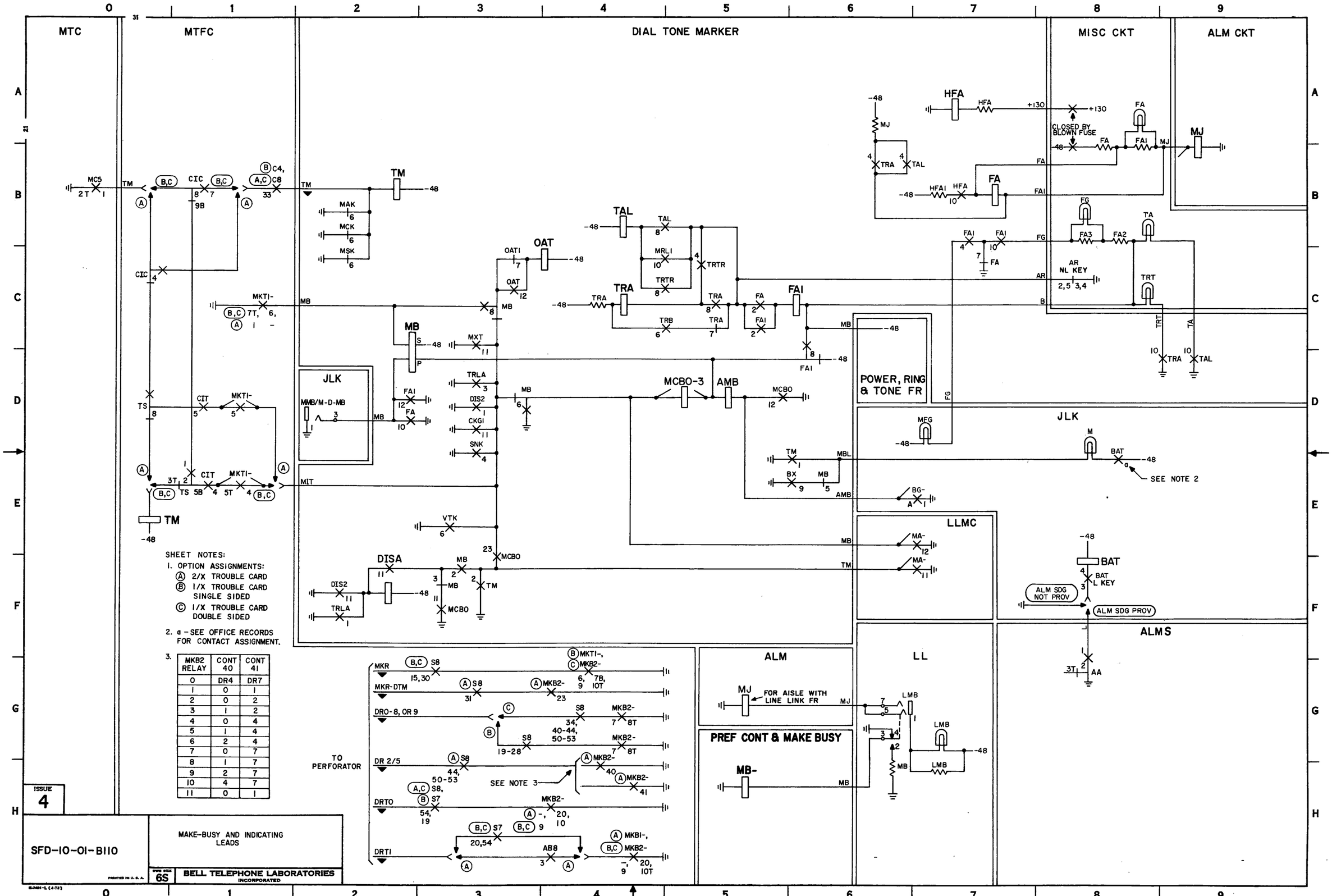

MKB2 RELAY	CONT 40	CONT 41
0	DR4	DR7
1	0	1
2	0	2
3	1	2
4	0	4
5	1	4
6	2	4
7	0	7
8	1	7
9	2	7
10	4	7
11	0	1

ISSUE 4

SFD-10-01-B110

MAKE-BUSY AND INDICATING LEADS

BELL TELEPHONE LABORATORIES INCORPORATED

SFD-10-01-B110

DIAL TONE MARKER

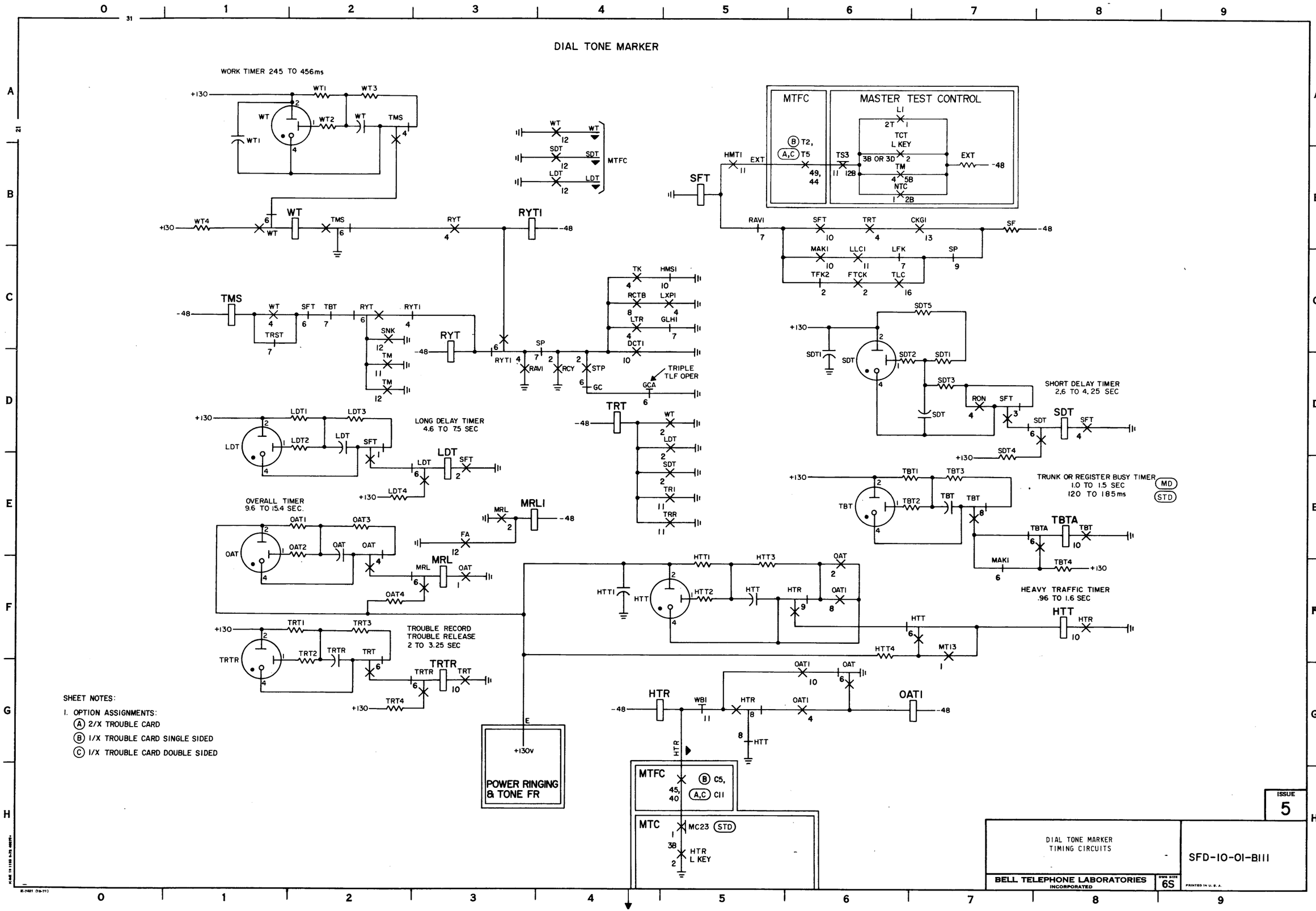

SFD-10-01-B111

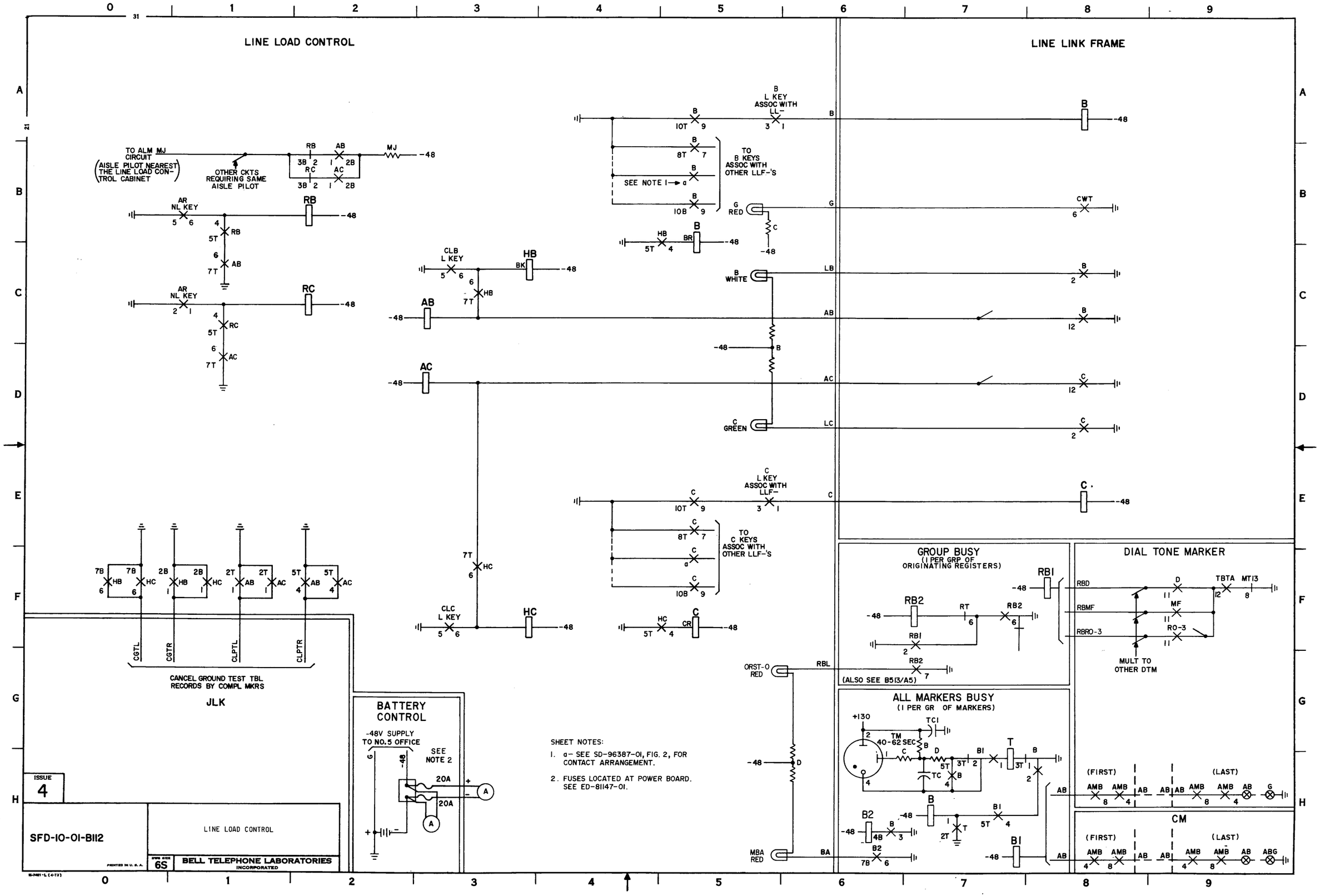
LINE LOAD CONTROL
LINE LINK FRAME
TO ALM MJ CIRCUIT (AISLE PILOT NEAREST THE LINE LOAD CONTROL CABINET)
OTHER CKTS REQUIRING SAME AISLE PILOT
B L KEY ASSOC WITH LL-
TO B KEYS ASSOC WITH OTHER LLF-'S
SEE NOTE 1 → a
C L KEY ASSOC WITH LLF-
TO C KEYS ASSOC WITH OTHER LLF-'S
CANCEL GROUND TEST TBL RECORDS BY COMPL MKRS
JLK
BATTERY CONTROL
-48V SUPPLY TO NO.5 OFFICE
SEE NOTE 2
GROUP BUSY
(1 PER GRP OF ORIGINATING REGISTERS)
(ALSO SEE B513/A5)
ALL MARKERS BUSY
(1 PER GR OF MARKERS)
DIAL TONE MARKER
MULT TO OTHER DTM
CM
(FIRST)
(LAST)
SHEET NOTES:
1. a- SEE SD-96387-01, FIG. 2, FOR CONTACT ARRANGEMENT.
2. FUSES LOCATED AT POWER BOARD. SEE ED-81147-01.
ISSUE 4
SFD-10-01-B112
LINE LOAD CONTROL
BELL TELEPHONE LABORATORIES INCORPORATED
SFD-10-01-B112

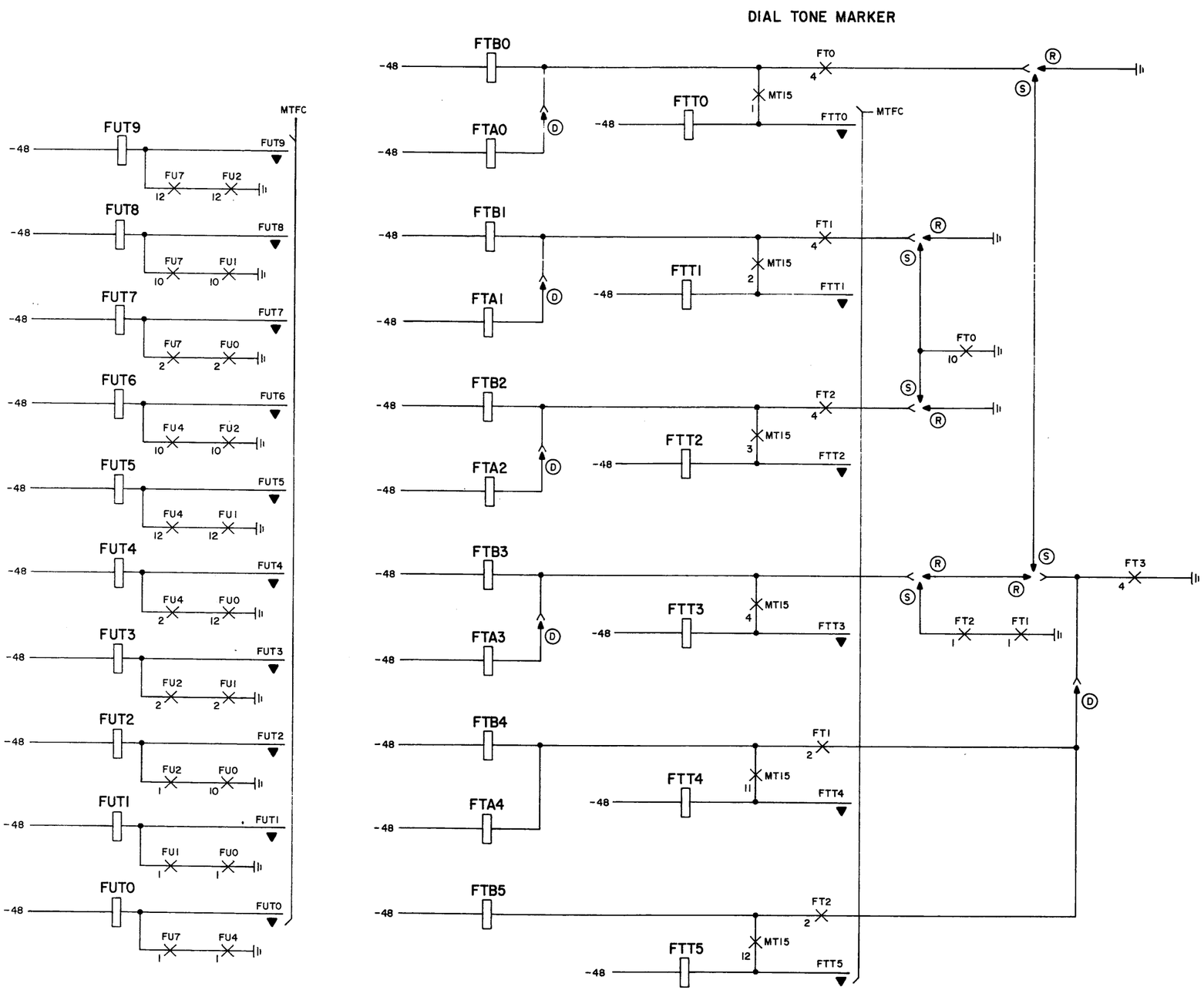

ISSUE 4

SFD-10-01-B114

LINE LINK FRAME NUMBER
AUXILIARY RELAYS

DWG SIZE 6S

BELL TELEPHONE LABORATORIES INCORPORATED

PRINTED IN U. S. A.

E-7481-L (4-72)

SFD-10-01-B114

ESTABLISHING DIALING CONNECTION

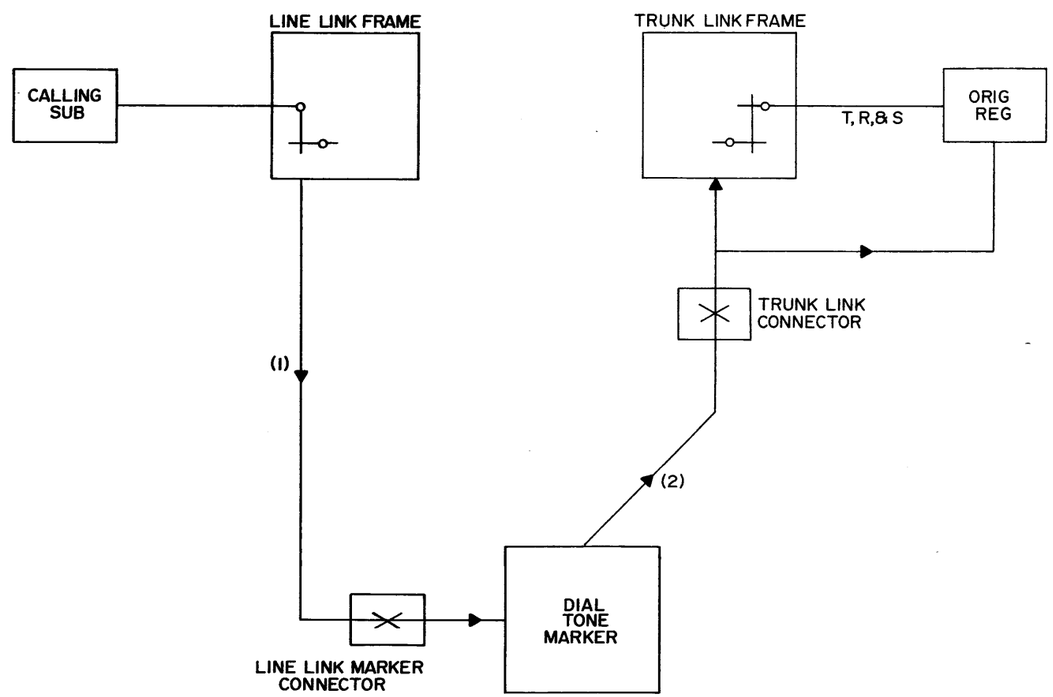

CAUTION!

DUE TO THE SIMPLIFIED NATURE OF THIS DOCUMENT, INFORMATION SHOWN MAY NOT BE COMPLETE.

INDEX

ISSUE 4

PART B2
CONNECTION TO TRUNK LINK
FRAME AND ORIGINATING REGISTER

SFD-10-01-B201

BELL TELEPHONE LABORATORIES INCORPORATED

DWG SIZE 6S

PRINTED IN U.S.A.

SFD-10-01-B201
2 SHEET, SH1

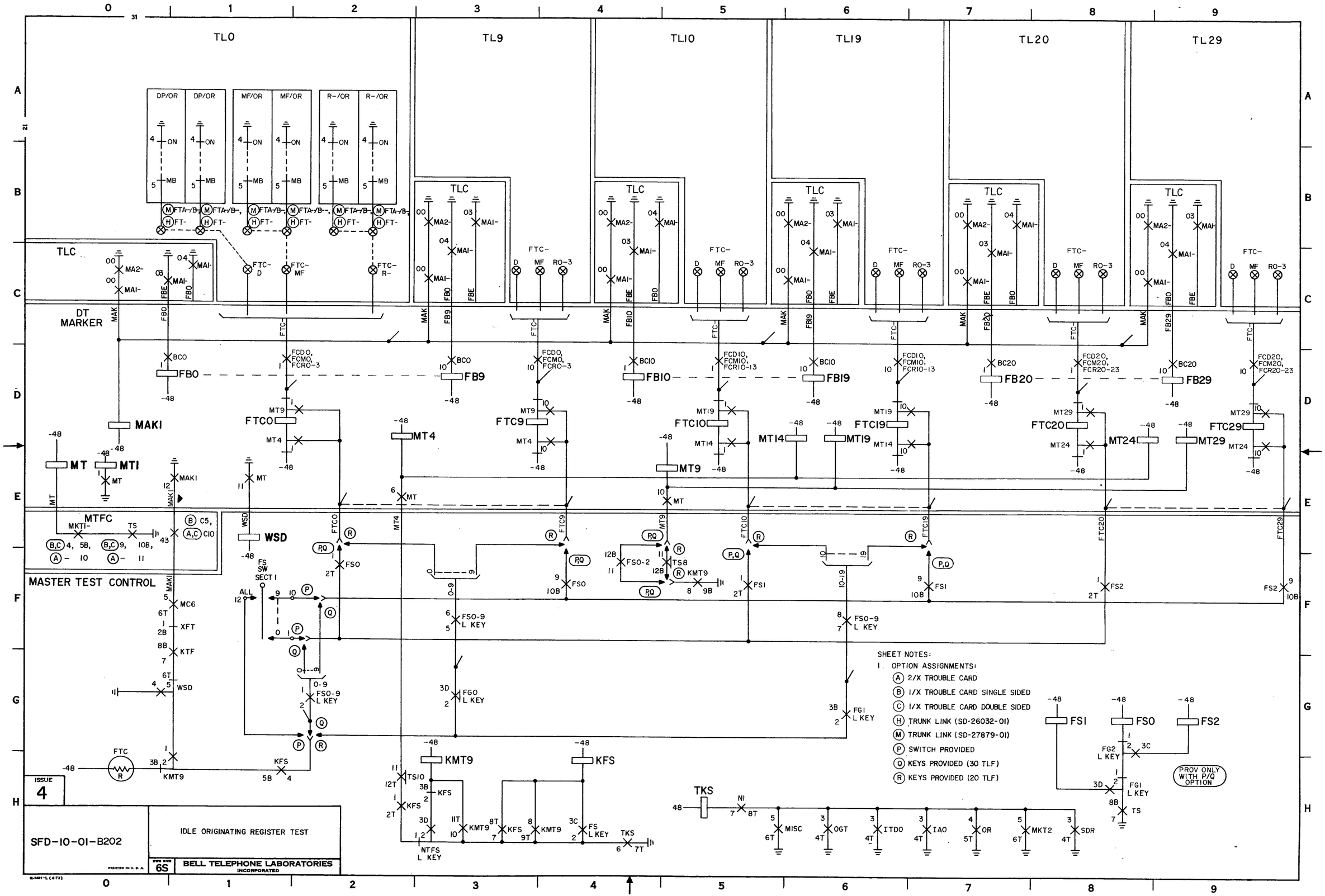

SFD-10-01-B202

DIAL TONE MARKER
TRUNK LINK FRAME SELECTION

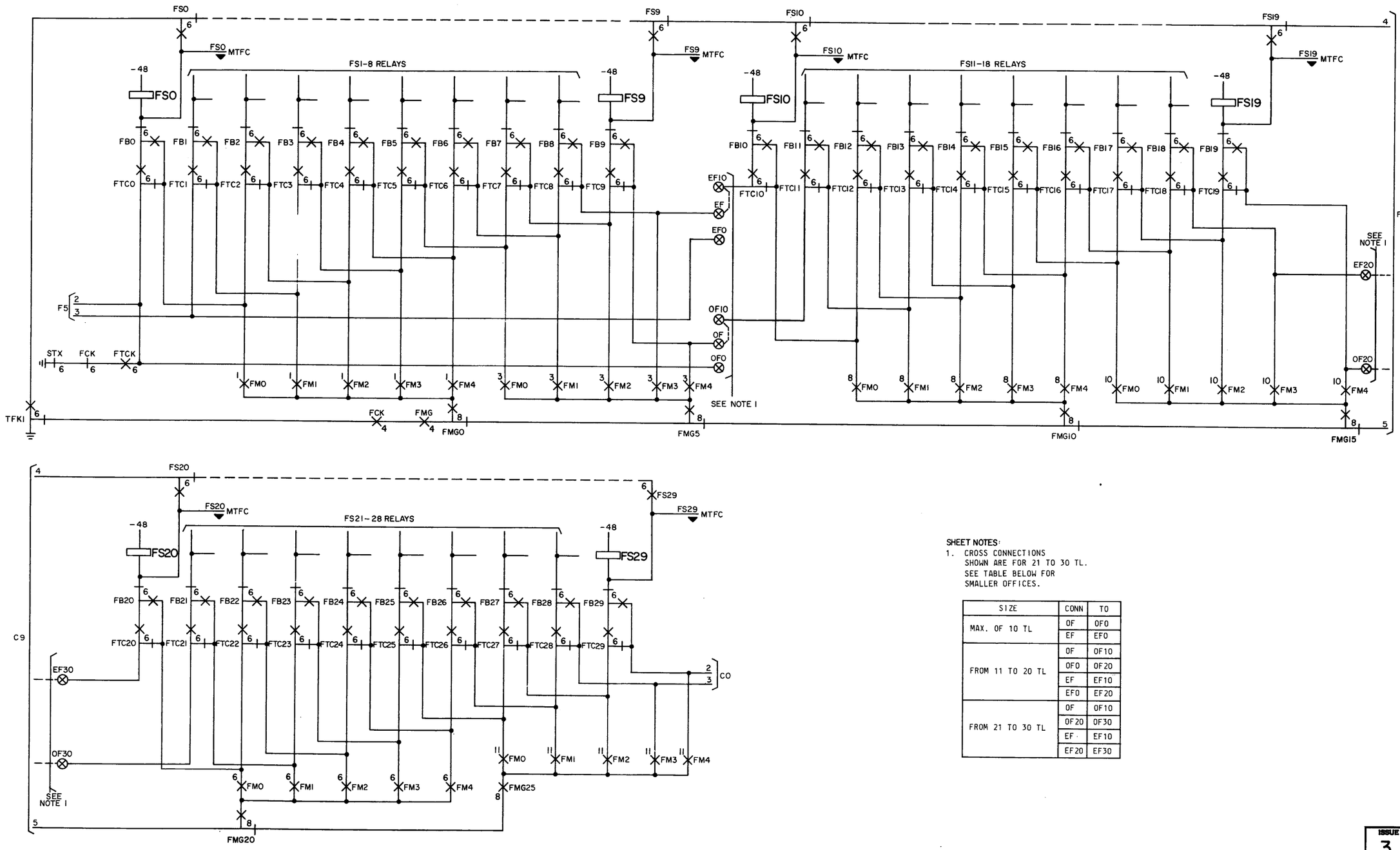

SHEET NOTES:

1. CROSS CONNECTIONS SHOWN ARE FOR 21 TO 30 TL. SEE TABLE BELOW FOR SMALLER OFFICES.

SIZE	CONN	TO
MAX. OF 10 TL	OF	OF0
	EF	EF0
FROM 11 TO 20 TL	OF	OF10
	OF0	OF20
	EF	EF10
	EF0	EF20
FROM 21 TO 30 TL	OF	OF10
	OF20	OF30
	EF	EF10
	EF20	EF30

ISSUE 3

TRUNK LINK FRAME SELECTION

SFD-10-01-B203

BELL TELEPHONE LABORATORIES INCORPORATED

DWG SIZE 6S

PRINTED IN U.S.A.

SFD-10-01-B203

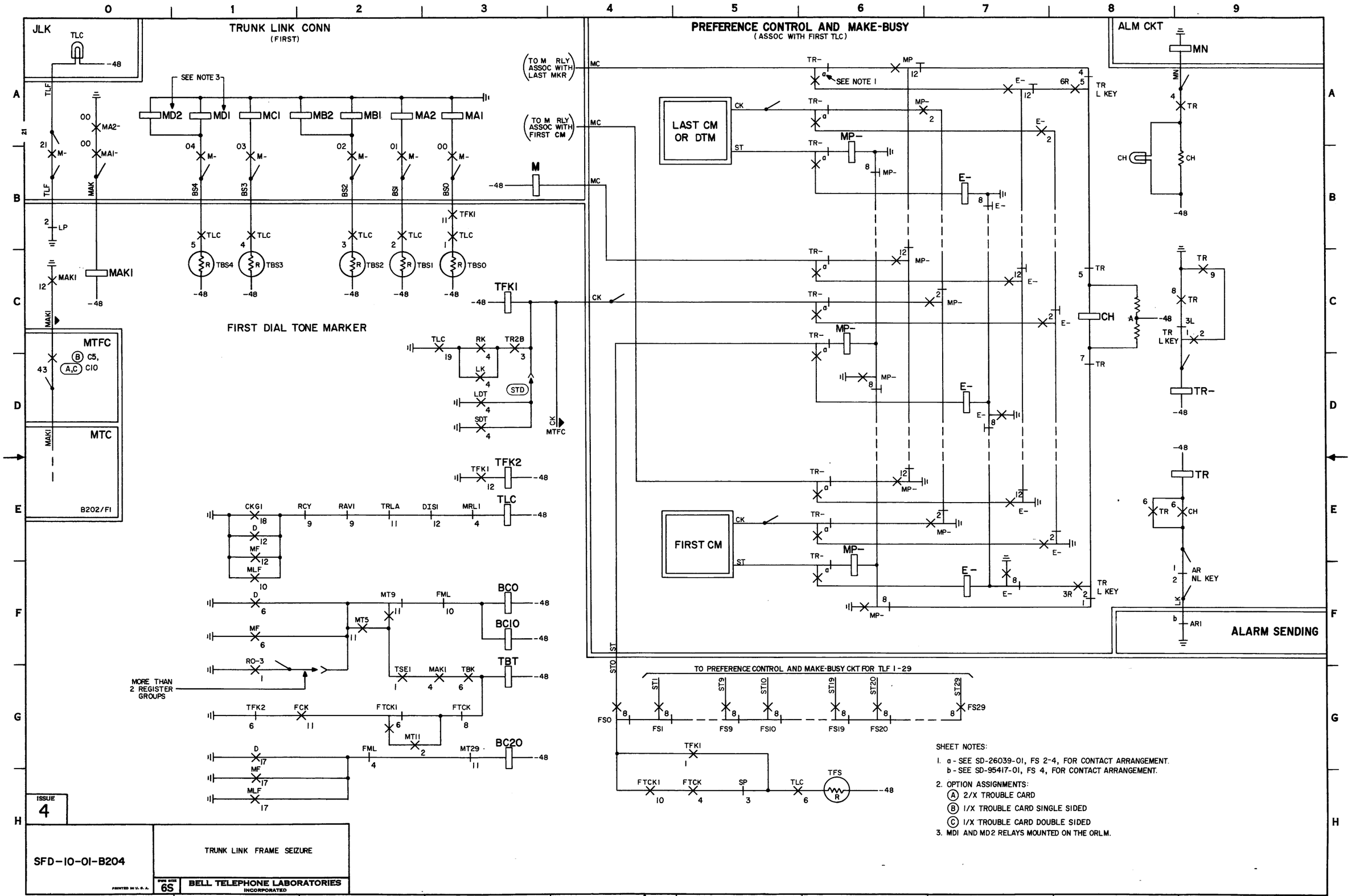

SHEET NOTES:

1. a - SEE SD-26039-01, FS 2-4, FOR CONTACT ARRANGEMENT.
   b - SEE SD-95417-01, FS 4, FOR CONTACT ARRANGEMENT.
2. OPTION ASSIGNMENTS:
   (A) 2/X TROUBLE CARD
   (B) 1/X TROUBLE CARD SINGLE SIDED
   (C) 1/X TROUBLE CARD DOUBLE SIDED
3. MD1 AND MD2 RELAYS MOUNTED ON THE ORLM.

ISSUE 4

SFD-10-01-B204

TRUNK LINK FRAME SEIZURE

PRINTED IN U. S. A.

SIZE 6S

BELL TELEPHONE LABORATORIES INCORPORATED

SFD-10-01-B204

DIAL TONE MARKER

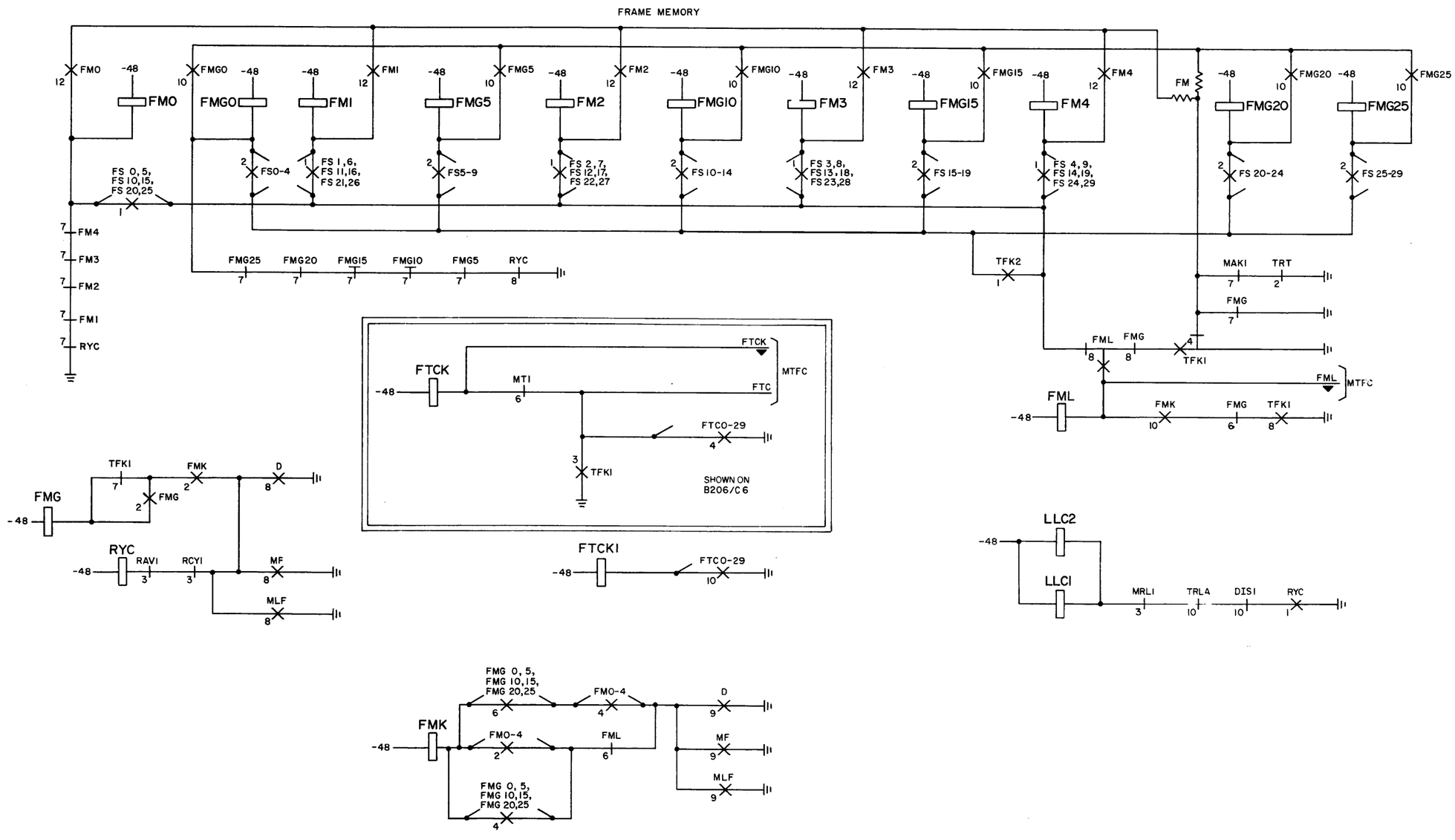

ISSUE 3

TRUNK LINK FRAME MEMORY

SFD-10-01-B205

BELL TELEPHONE LABORATORIES INCORPORATED

DWG SIZE 6S

PRINTED IN U.S.A.

SFD-10-01-B205

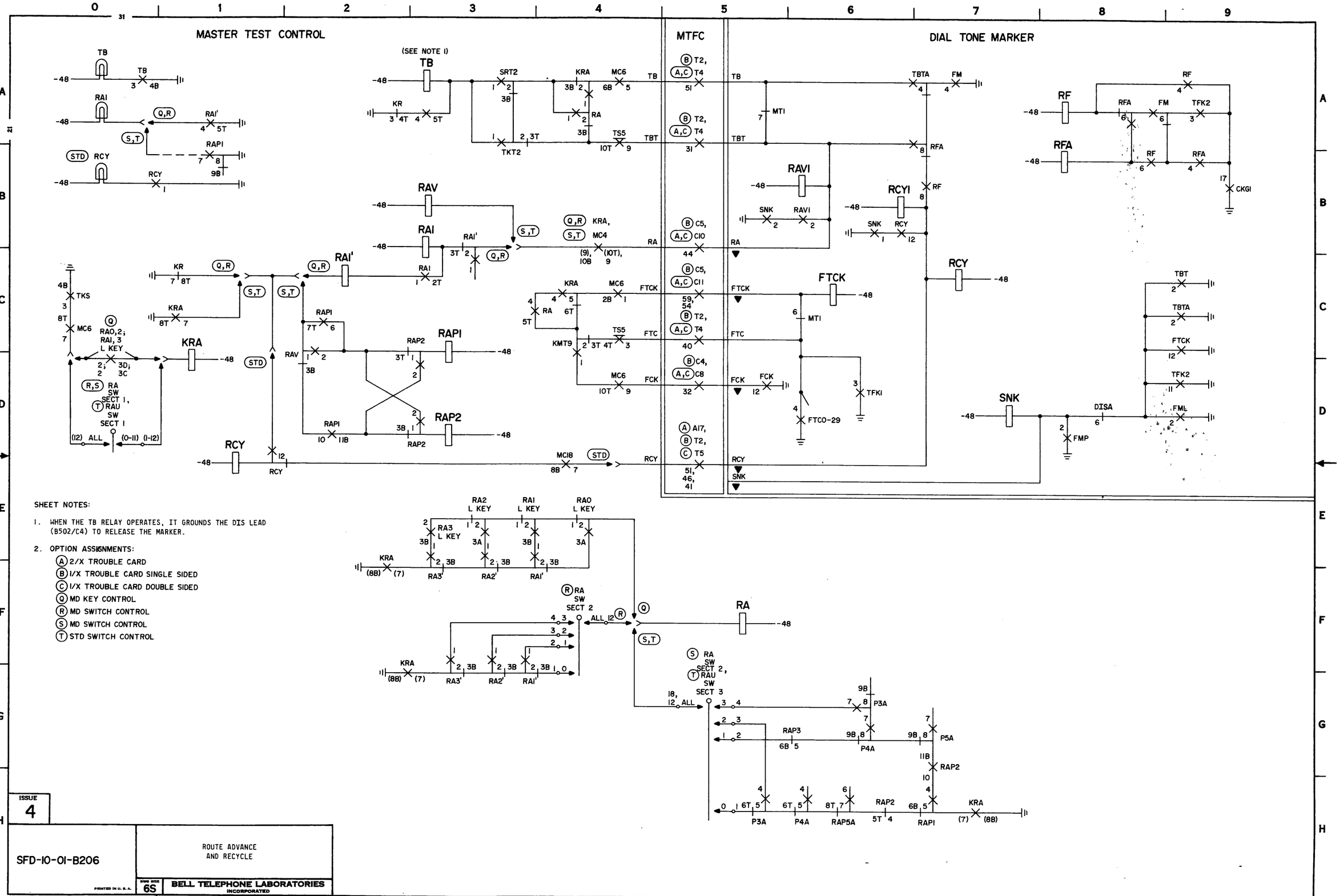

SHEET NOTES:

1. WHEN THE TB RELAY OPERATES, IT GROUNDS THE DIS LEAD (B502/C4) TO RELEASE THE MARKER.

2. OPTION ASSIGNMENTS:
   - (A) 2/X TROUBLE CARD
   - (B) 1/X TROUBLE CARD SINGLE SIDED
   - (C) 1/X TROUBLE CARD DOUBLE SIDED
   - (Q) MD KEY CONTROL
   - (R) MD SWITCH CONTROL
   - (S) MD SWITCH CONTROL
   - (T) STD SWITCH CONTROL

ISSUE 4

SFD-10-01-B206

ROUTE ADVANCE AND RECYCLE

PRINTED IN U. S. A.

DWG SIZE 6S

BELL TELEPHONE LABORATORIES INCORPORATED

B-2481-L (4-73)

SFD-10-01-B206

DIAL TONE MARKER

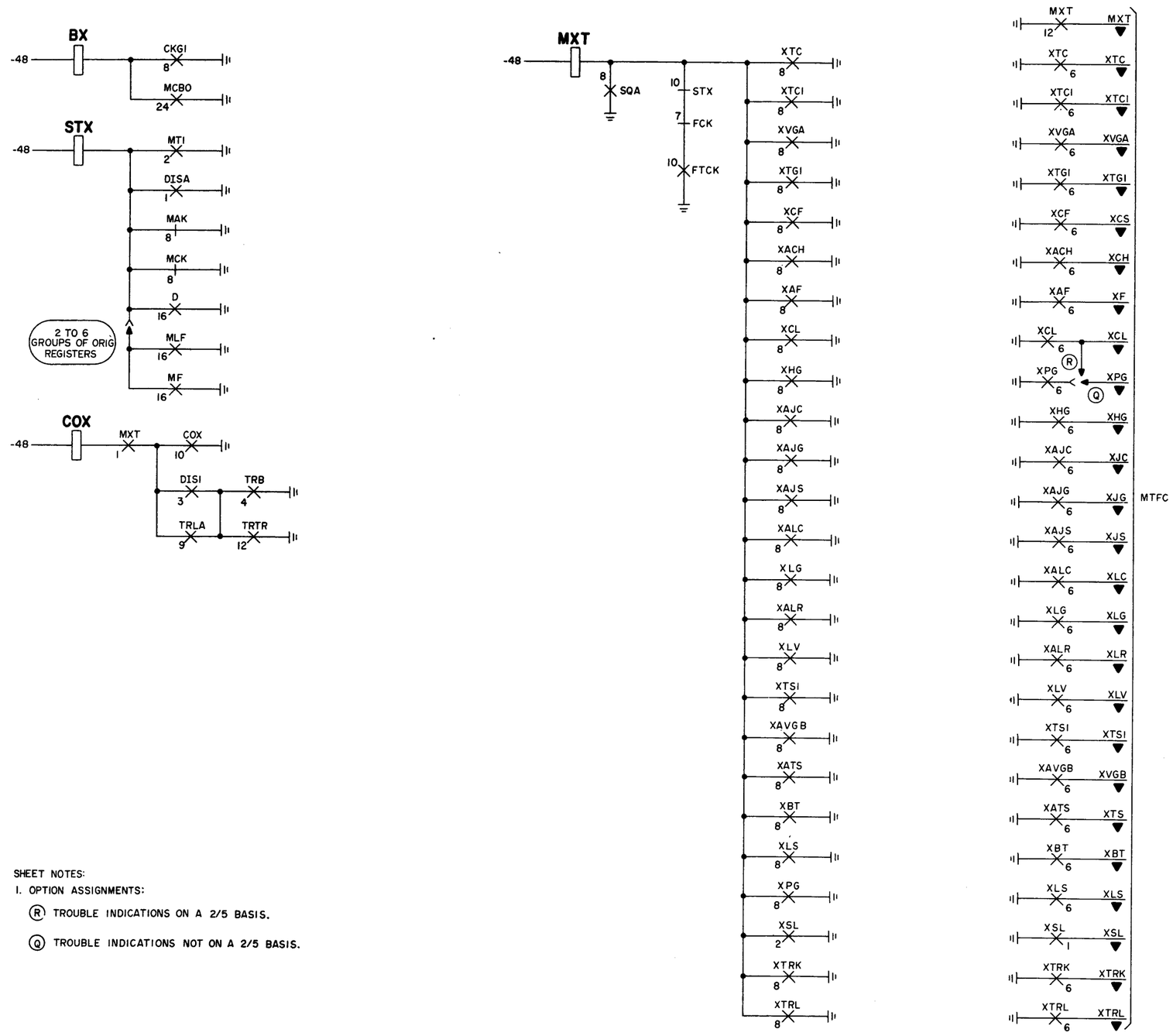

SHEET NOTES:

1. OPTION ASSIGNMENTS:

   (R) TROUBLE INDICATIONS ON A 2/5 BASIS.

   (Q) TROUBLE INDICATIONS NOT ON A 2/5 BASIS.

ISSUE 3

DIAL TONE MARKER
CROSS RELAY INDICATIONS

SFD-10-01-B207

BELL TELEPHONE LABORATORIES INCORPORATED

DWG SIZE 6S

PRINTED IN U. S. A.

SFD-10-01-B207

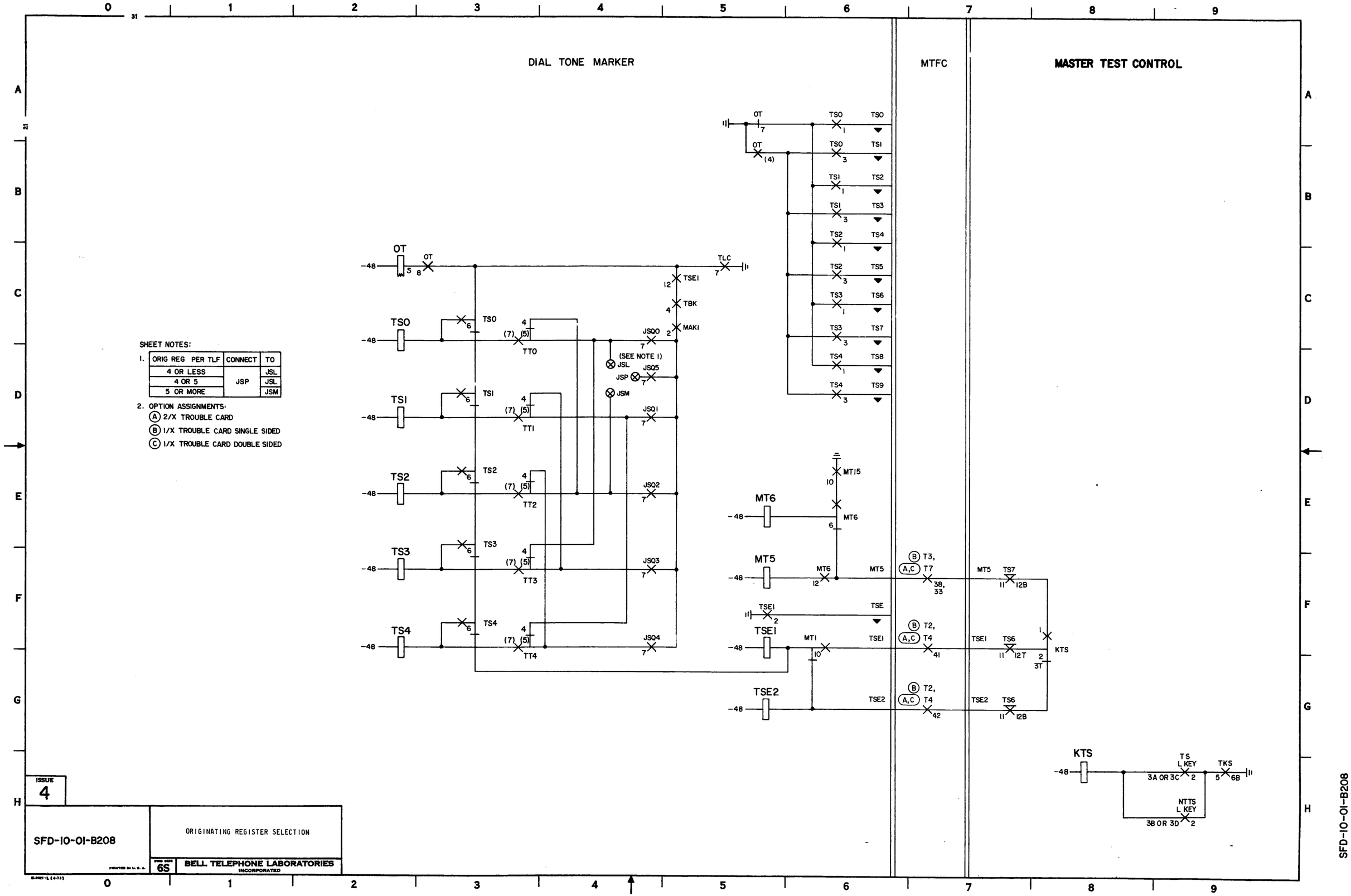
DIAL TONE MARKER
MTFC
MASTER TEST CONTROL
OT
TSO
TS1
TS2
TS3
TS4
TSE1
TSE2
MT6
MT5
KTS
-48
TLC
TBK
MAKI
JSQ0
JSQ1
JSQ2
JSQ3
JSQ4
JSQ5
JSL
JSP
JSM
(SEE NOTE 1)
TT0
TT1
TT2
TT3
TT4
MT15
MT1
TS7
TS8
TS9
TS6
T3,
T7
T2,
T4
TS
L KEY
TKS
NTTS
L KEY
3A OR 3C
3B OR 3D
SHEET NOTES:
1.
ORIG REG PER TLF	CONNECT	TO
4 OR LESS	JSP	JSL
4 OR 5		JSL
5 OR MORE		JSM
2. OPTION ASSIGNMENTS:
(A) 2/X TROUBLE CARD
(B) 1/X TROUBLE CARD SINGLE SIDED
(C) 1/X TROUBLE CARD DOUBLE SIDED
ISSUE 4
SFD-10-01-B208
ORIGINATING REGISTER SELECTION
DWG SIZE 6S
BELL TELEPHONE LABORATORIES INCORPORATED
PRINTED IN U. S. A.
SFD-10-01-B208

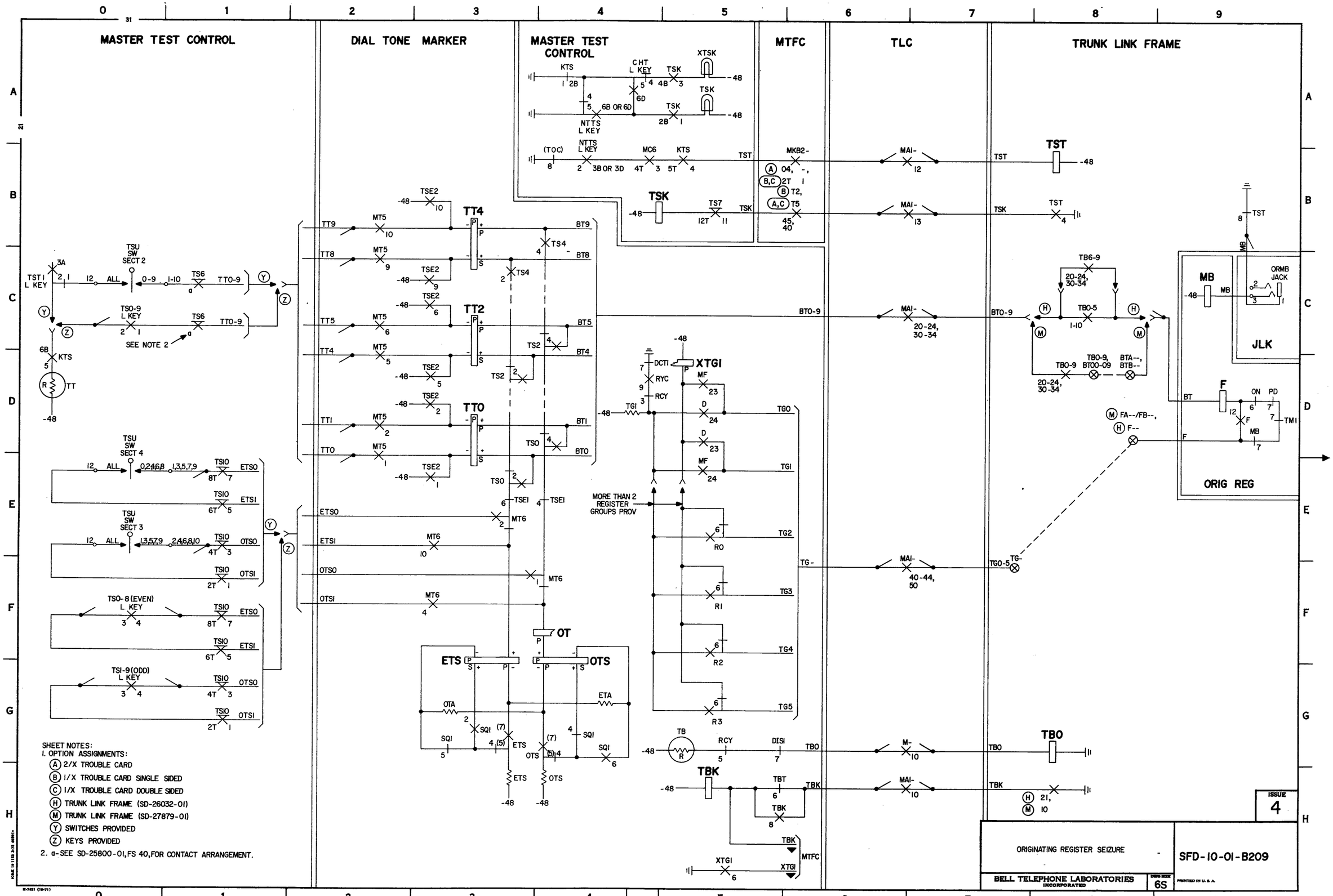

SFD-10-01-B209

ESTABLISHING DIALING CONNECTION

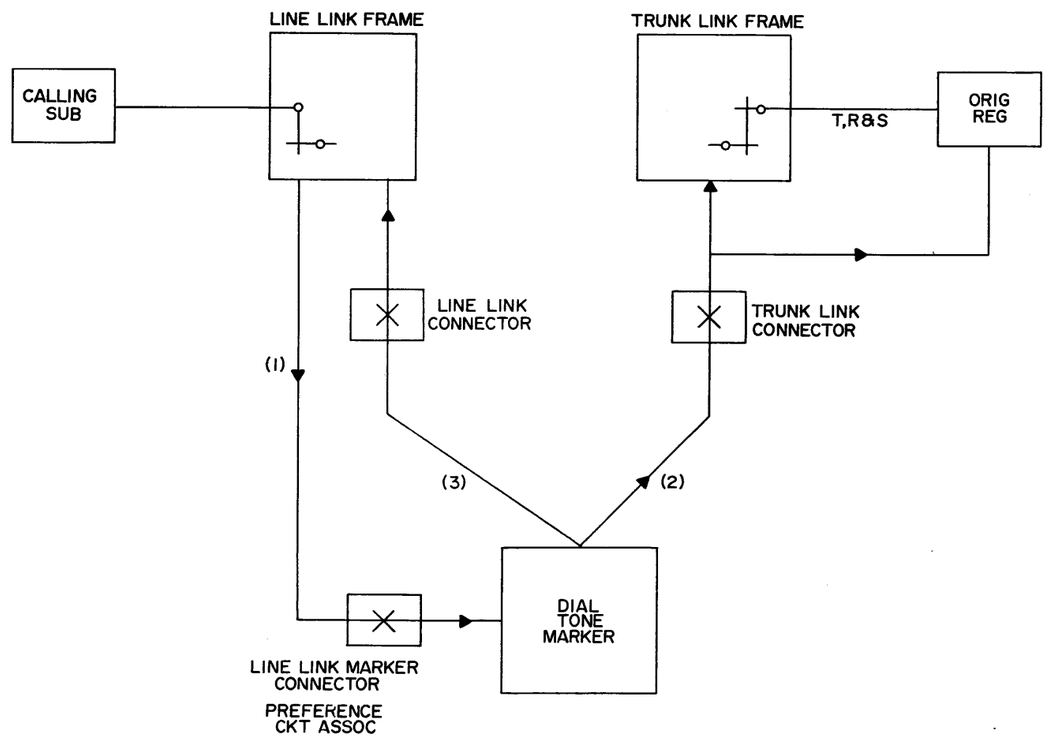

CAUTION!

DUE TO THE SIMPLIFIED NATURE OF THIS DOCUMENT, INFORMATION SHOWN MAY NOT BE COMPLETE.

INDEX

ISSUE 4

PART B3
CONNECTION TO LINE LINK FRAME

SFD-10-01-B301

BELL TELEPHONE LABORATORIES INCORPORATED

DWG SIZE 6S

PRINTED IN U. S. A.

SFD-10-01-B301
2 SHEETS, SH1

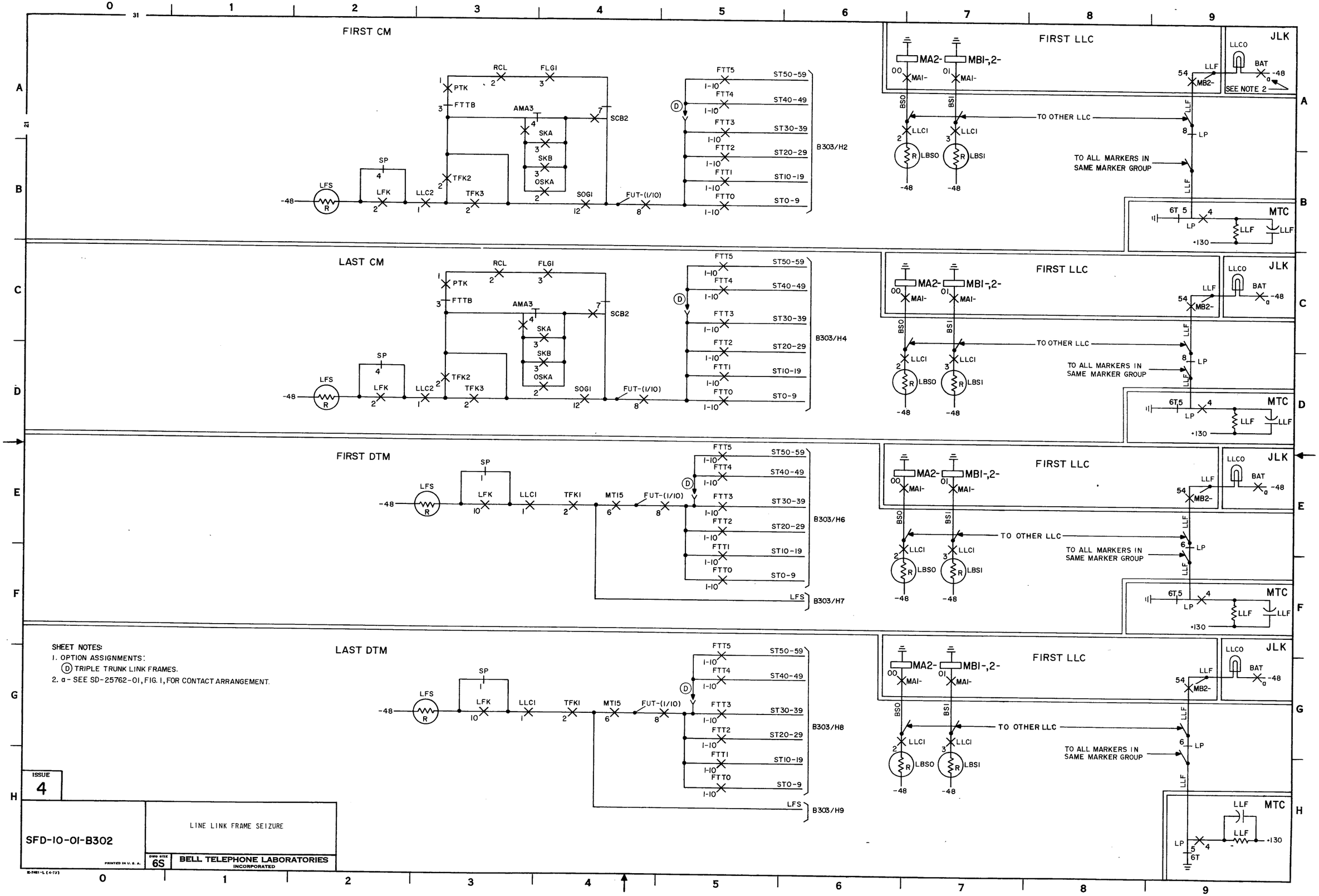

SHEET NOTES:
1. OPTION ASSIGNMENTS:
   (D) TRIPLE TRUNK LINK FRAMES.
2. a - SEE SD-25762-01, FIG. 1, FOR CONTACT ARRANGEMENT.

ISSUE 4

SFD-10-01-B302

LINE LINK FRAME SEIZURE

DWG SIZE 6S

BELL TELEPHONE LABORATORIES INCORPORATED

PRINTED IN U. S. A.

E-7481-L (4-73)

SFD-10-01-B302

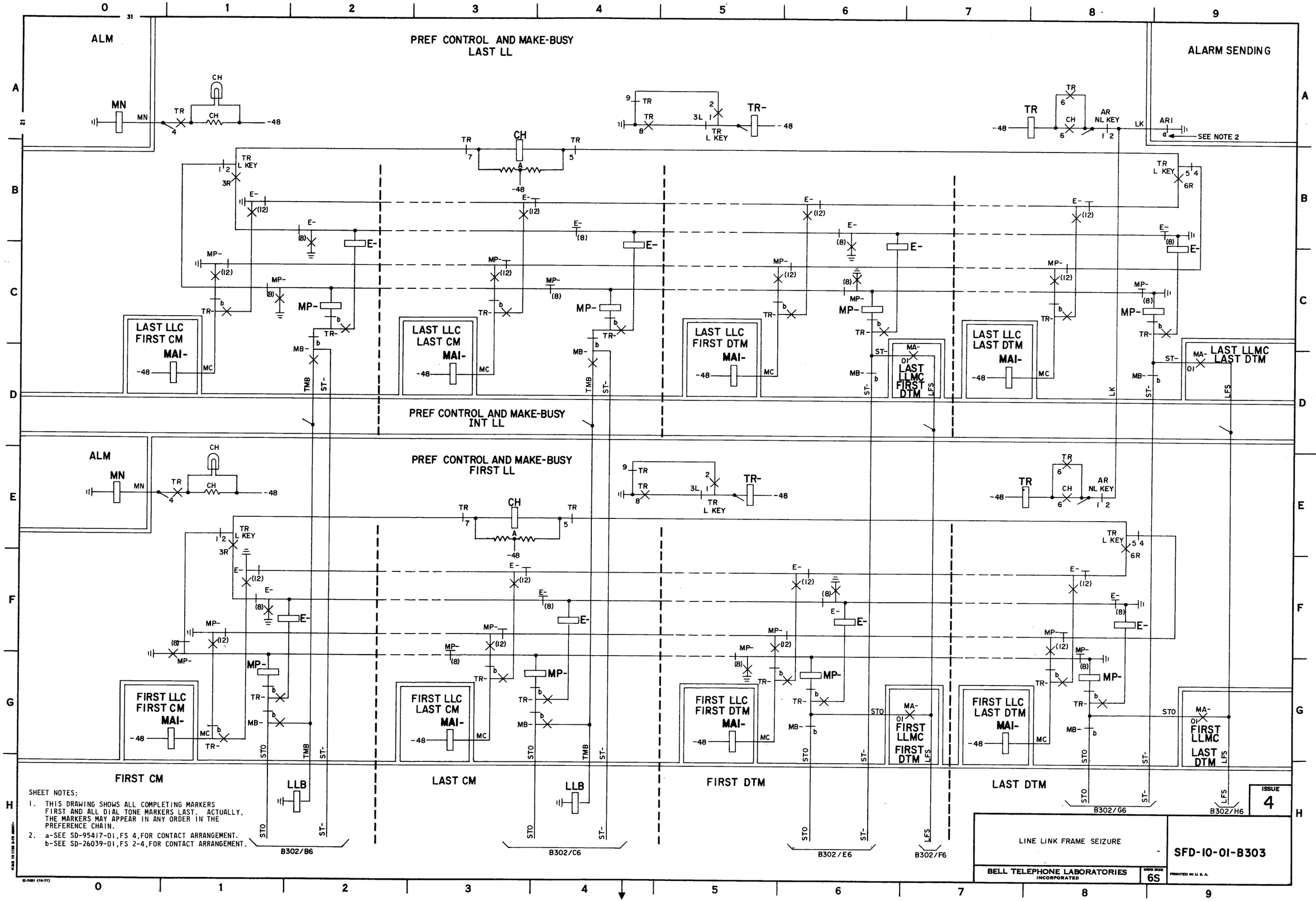

SHEET NOTES:

1. THIS DRAWING SHOWS ALL COMPLETING MARKERS FIRST AND ALL DIAL TONE MARKERS LAST. ACTUALLY, THE MARKERS MAY APPEAR IN ANY ORDER IN THE PREFERENCE CHAIN.
2. a-SEE SD-95417-01, FS 4, FOR CONTACT ARRANGEMENT.
   b-SEE SD-26039-01, FS 2-4, FOR CONTACT ARRANGEMENT.

ISSUE 4

LINE LINK FRAME SEIZURE

SFD-10-01-B303

BELL TELEPHONE LABORATORIES INCORPORATED

DWG SIZE 6S

PRINTED IN U.S.A.

E-7421 (10-71)

SFD-10-01-B303

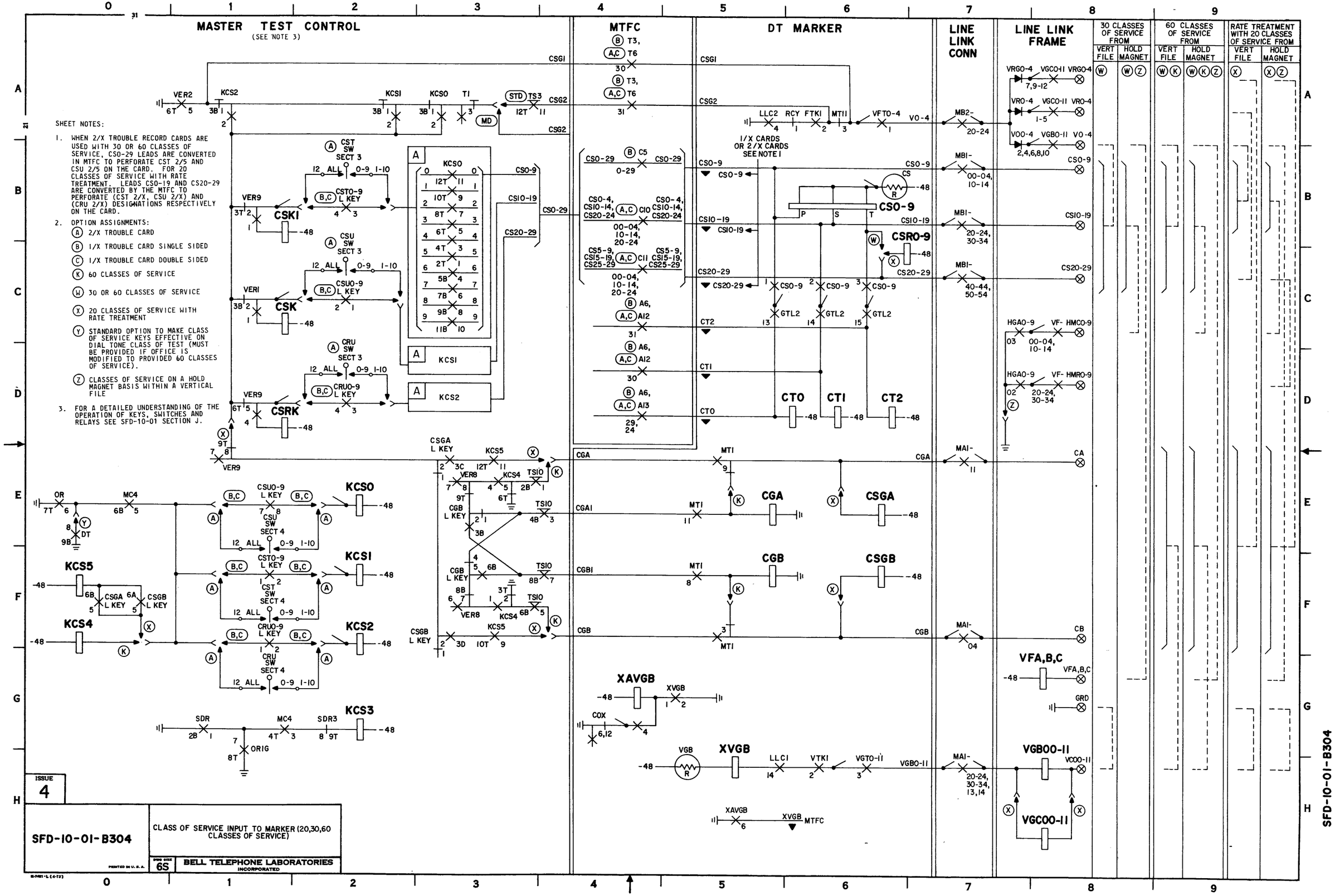

SFD-10-01-B304

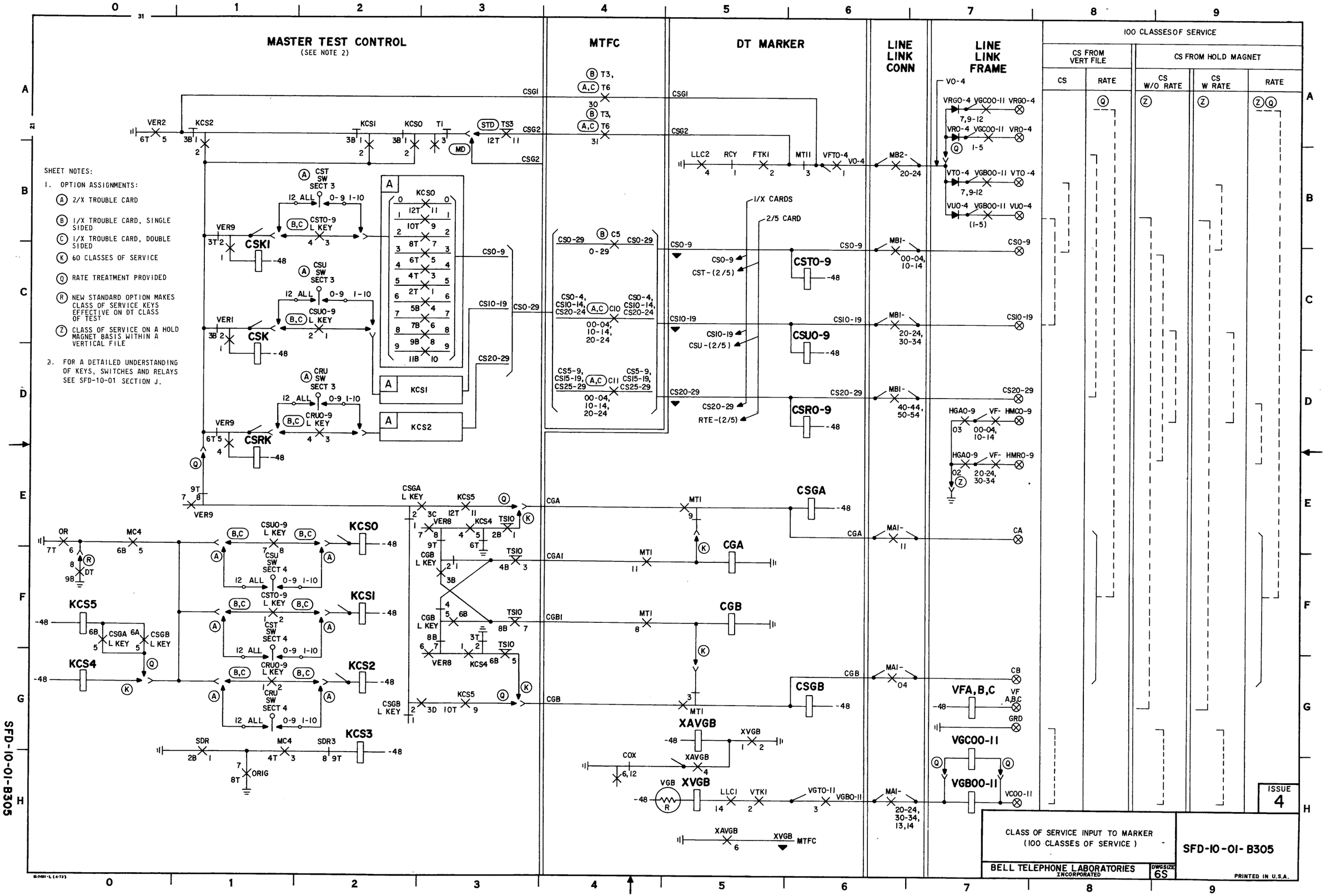
MASTER TEST CONTROL
(SEE NOTE 2)
MTFC
DT MARKER
LINE LINK CONN
LINE LINK FRAME
100 CLASSES OF SERVICE
CS FROM VERT FILE
CS FROM HOLD MAGNET
CS
RATE
CS W/O RATE
CS W RATE
SHEET NOTES:
1. OPTION ASSIGNMENTS:
(A) 2/X TROUBLE CARD
(B) 1/X TROUBLE CARD, SINGLE SIDED
(C) 1/X TROUBLE CARD, DOUBLE SIDED
(K) 60 CLASSES OF SERVICE
(Q) RATE TREATMENT PROVIDED
(R) NEW STANDARD OPTION MAKES CLASS OF SERVICE KEYS EFFECTIVE ON DT CLASS OF TEST
(Z) CLASS OF SERVICE ON A HOLD MAGNET BASIS WITHIN A VERTICAL FILE
2. FOR A DETAILED UNDERSTANDING OF KEYS, SWITCHES AND RELAYS SEE SFD-10-01 SECTION J.
CSKI
CSK
CSRK
CSTO-9
CSUO-9
CSRO-9
CSGA
CGA
CGB
CSGB
KCS0
KCS1
KCS2
KCS3
KCS4
KCS5
XAVGB
XVGB
VFA,B,C
VGCOO-11
VGBOO-11
1/X CARDS
2/5 CARD
CLASS OF SERVICE INPUT TO MARKER
(100 CLASSES OF SERVICE)
BELL TELEPHONE LABORATORIES INCORPORATED
DWG SIZE 6S
SFD-10-01-B305
ISSUE 4
PRINTED IN U.S.A.
SFD-10-01-B305

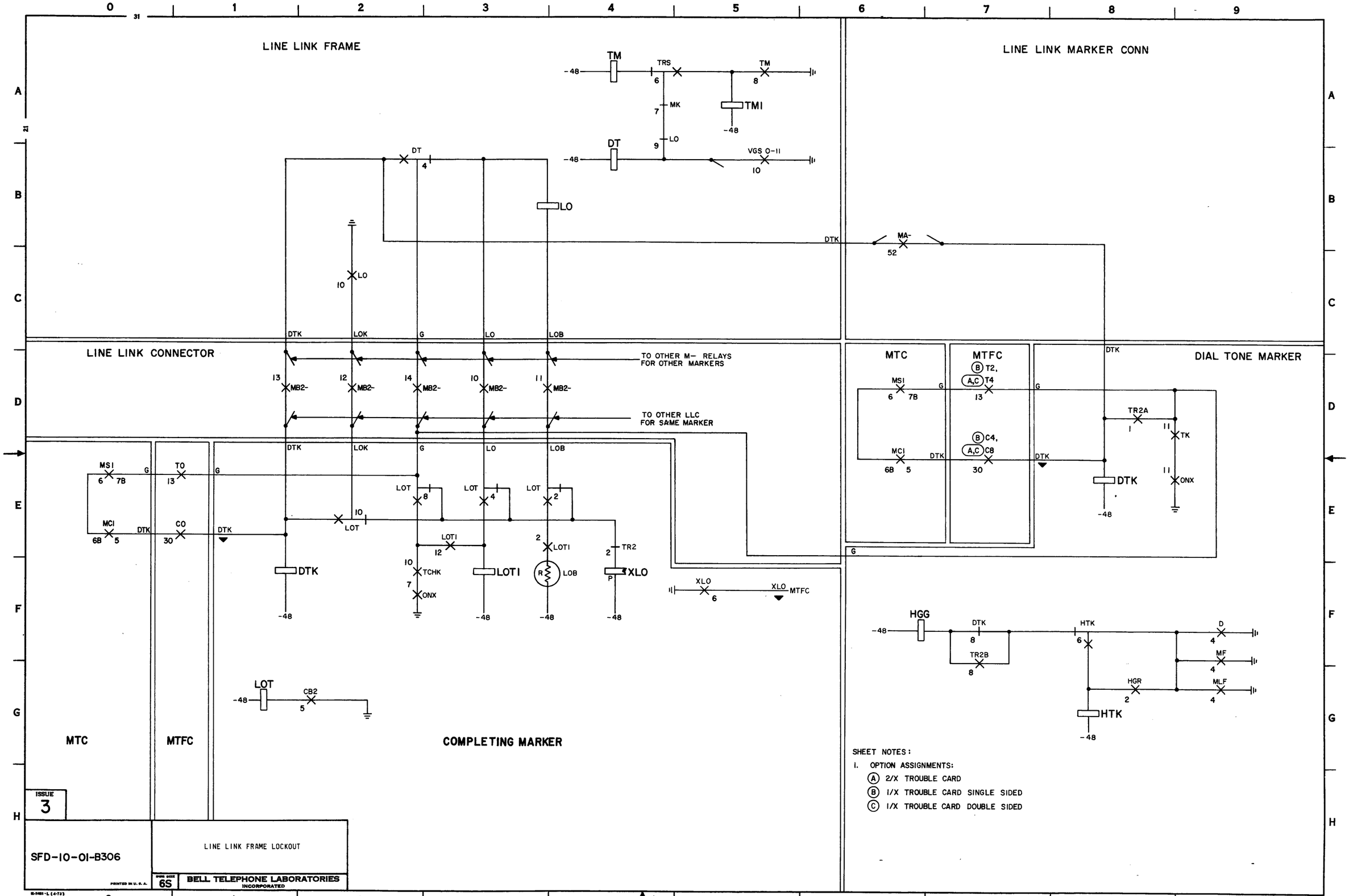

SFD-10-01-B306

ESTABLISHING DIALING CONNECTION

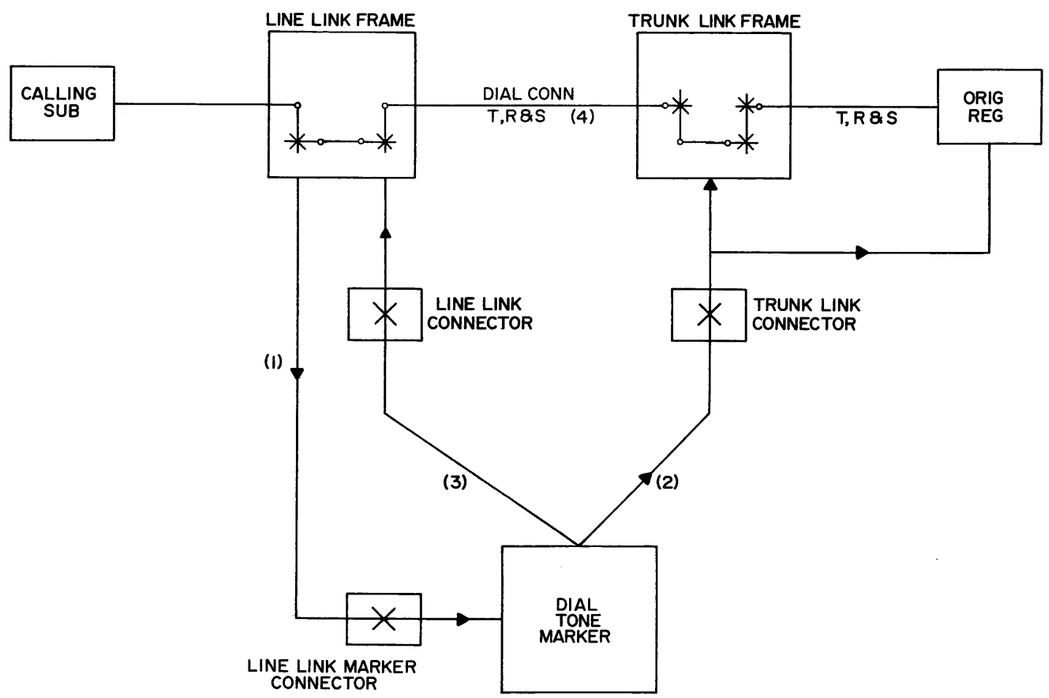

CAUTION!

DUE TO THE SIMPLIFIED NATURE OF THIS DOCUMENT, INFORMATION SHOWN MAY NOT BE COMPLETE.

INDEX

ISSUE 4

PART B4
NETWORK CONNECTION
AND TRANSMISSION OF INFORMATION
TO ORIGINATING REGISTER

SFD-10-01-B401

BELL TELEPHONE LABORATORIES INCORPORATED

DWG SIZE 6S

PRINTED IN U.S.A.

SFD-10-01-B401
2 SHEETS, SH 1

DIAL TONE MARKER

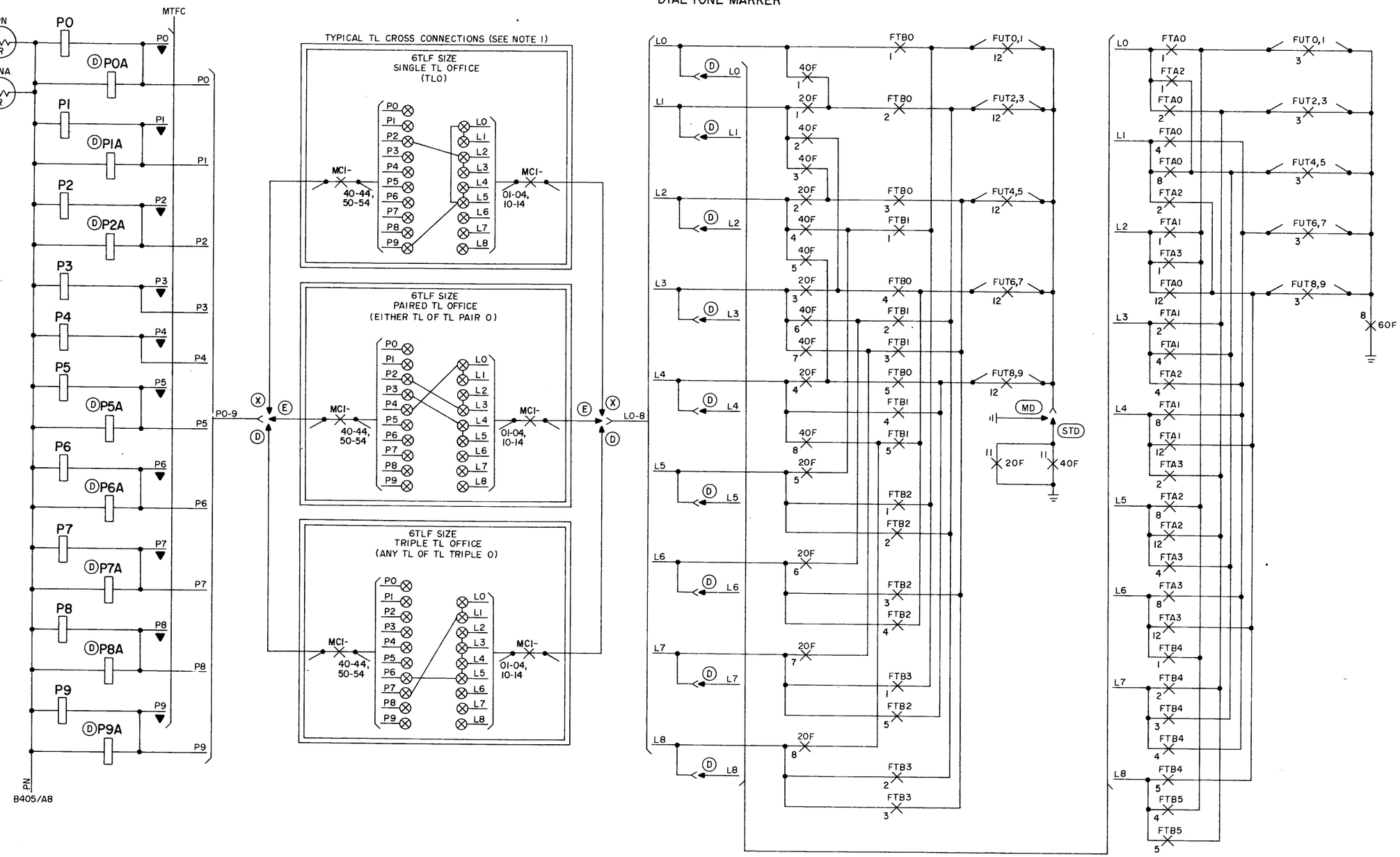

SHEET NOTES:

1. TYPICAL TL CROSS CONNECTIONS ARE SHOWN FOR 6TLF SIZE OFFICES WITH SINGLE, PAIRED OR TRIPLE TL. REFER TO BSP 819-220-150 FOR TL CROSS CONNECTIONS FOR ANY SIZE OFFICE.
2. OPTION ASSIGNMENTS:
   - (D) TRIPLE TL OFFICE
   - (E) PAIRED TL OFFICE
   - (X) SINGLE TL OFFICE

ISSUE 3

SFD-10-01-B402

JUNCTOR PATTERN UNITS CONTROL

DWG SIZE 6S

BELL TELEPHONE LABORATORIES INCORPORATED

PRINTED IN U. S. A.

SFD-10-01-B402

DIAL TONE MARKER

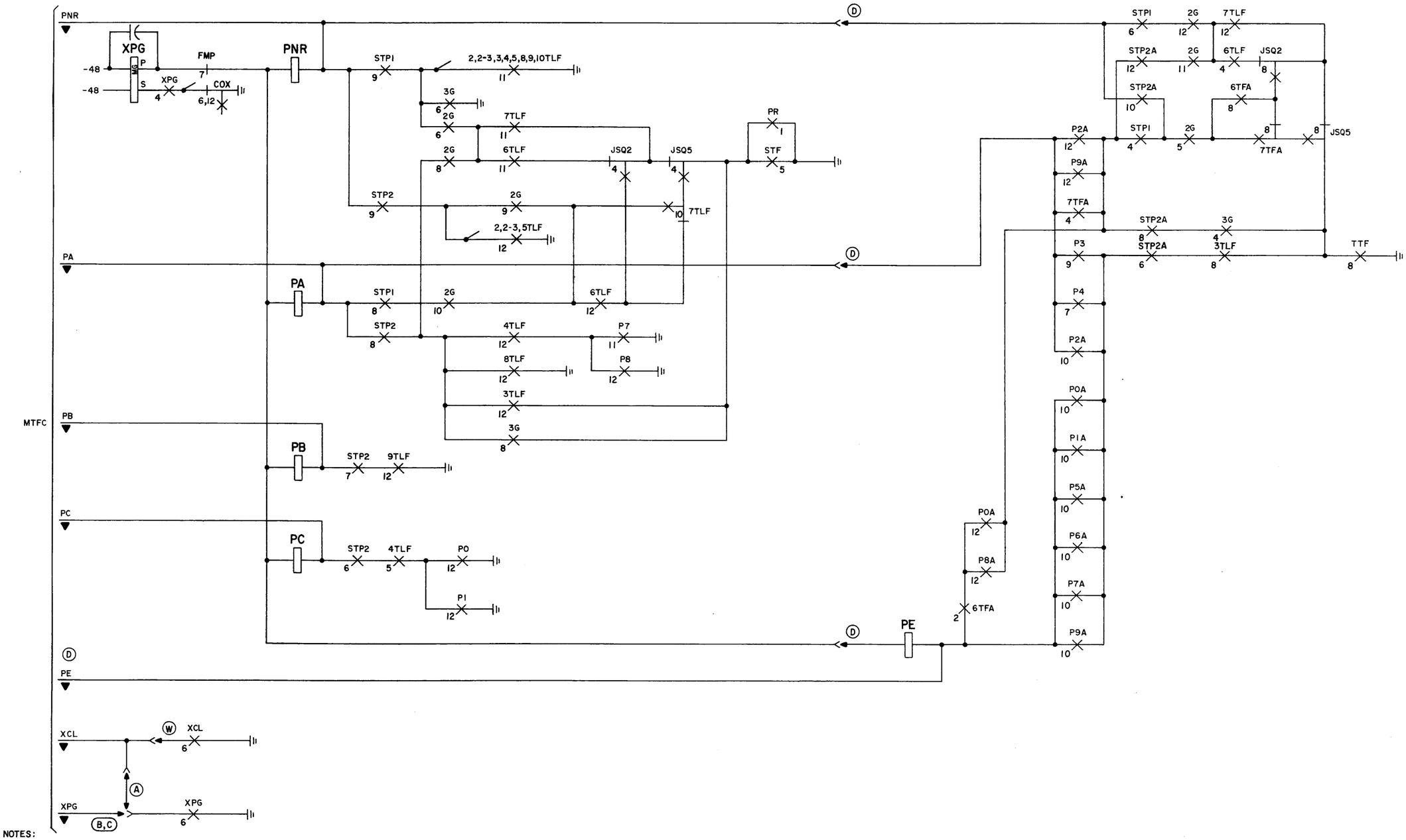

SHEET NOTES:

1. OPTION ASSIGNMENTS:
   - (A) 2/X TROUBLE CARDS
   - (B,C) 1/X TROUBLE CARDS
   - (D) TRIPLE TRUNK LINK FRAMES
   - (W) 3 TO 6 GROUPS OF ORIGINATING REGISTERS

ISSUE 3

JUNCTOR PATTERN TENS CONTROL

SFD-10-01-B403

BELL TELEPHONE LABORATORIES INCORPORATED

DWG SIZE 6S

PRINTED IN U. S. A.

SFD-10-01-B403

DIAL TONE MARKER JUNCTOR SEQUENCE CONTROL (TEST CALL)

KCH (MTC)
JSQ-(MTC) KEY/SW
MKT1 (MTFC)
MT (DTM)
MT8 (DTM)
SQ0/1
MT8A (DTM)
JSQ- (DTM)
JLE/JLO (DTM)
KJSQ (MTC)
IF JSQ1 OPERATES SQ0 OPERATES – OTHERWISE SQ0 AND SQ1 REMAIN NORMAL
JSQ-(DTM)
SQ0
JLE/JLO (DTM)
MT8 (DTM)
MT8A (DTM)
MT8K (MTC)
MC (MTC)

DIAL TONE MARKER JUNCTOR SEQUENCE CONTROL

6TH MKR SEIZURE B004 P13/ B007 AJ28 — LLC2
MKR RELEASE OR RECYCLE B006 T14/B007 A22 — LLC2

JSE
JSQ0
JLO
JSQ5 — SQ0 — IF SQ1 IS DOWN JSQ0 OPERATES SQ0, IF SQ0 IS UP JSQ0 RELEASES SQ0
JLE
JSE
NOTE 7TH SEIZURE SAME AS FIRST AND SO ON
JSO

FUSE APPLIED — SQA
JSQ0 — MXT
JLO — SQ0
JSO — SQA
NORMAL
END OF 1ST CALL AFTER FUSE APPLIED

1ST MKR SEIZURE — LLC2 B004 P13/ B007 AJ28
MKR RELEASE OR RECYCLE — LLC2 B006 T14/ B007 A22

JSQ1
JLE
JSQ0
JLO
JSO

2ND MKR SEIZURE — LLC2 B004 P13/ B007 AJ28
MKR RELEASE OR RECYCLE — LLC2 B006 T14/ B007 A22

NOTE 8TH SEIZURE SAME AS SECOND AND SO ON

JSE
JSQ2
JLO — SQ1 — IF SQ0 IS UP JSQ2 OPERATES SQ1, IF SQ1 IS UP JSQ2 RELEASES SQ1
JSQ1
JLE
JSE

3RD MKR SEIZURE — LLC2 B004 P13/ B007 AJ28
MKR RELEASE OR RECYCLE — LLC2 B006 T14/ B007 A22

JSO
JSQ3
JLE
JSQ2
JLO
JSO

4TH MKR SEIZURE — LLC2 B004 P13/ B007 AJ28
MKR RELEASE OR RECYCLE — LLC2 B006 T14/ B007 A22

JSE
JSQ4
JLO
JSQ3
JLE
JSE

5TH MKR SEIZURE — LLC2 B004 P13/ B007 AJ28
MKR RELEASE OR RECYCLE — LLC2 B006 T14/ B007 A22

JSO
JSQ5
JLE
JSQ4
JLO
JSO

	WHEN LLC2 OPERATES	WHEN LLC2 RELEASES
ODD MARKER USAGES	JSO OPERATES	JSQ1, 3 OR 5 & JLE OPERATES
EVEN MARKER USAGES	JSE OPERATES	JSQ0, 2 OR 4 & JLO OPERATES

ISSUE 4

SFD-10-01-B404

SEQUENCE CHART
JUNCTOR SEQUENCE CONTROL

DWG SIZE 6S

BELL TELEPHONE LABORATORIES INCORPORATED

SFD-10-01-B404

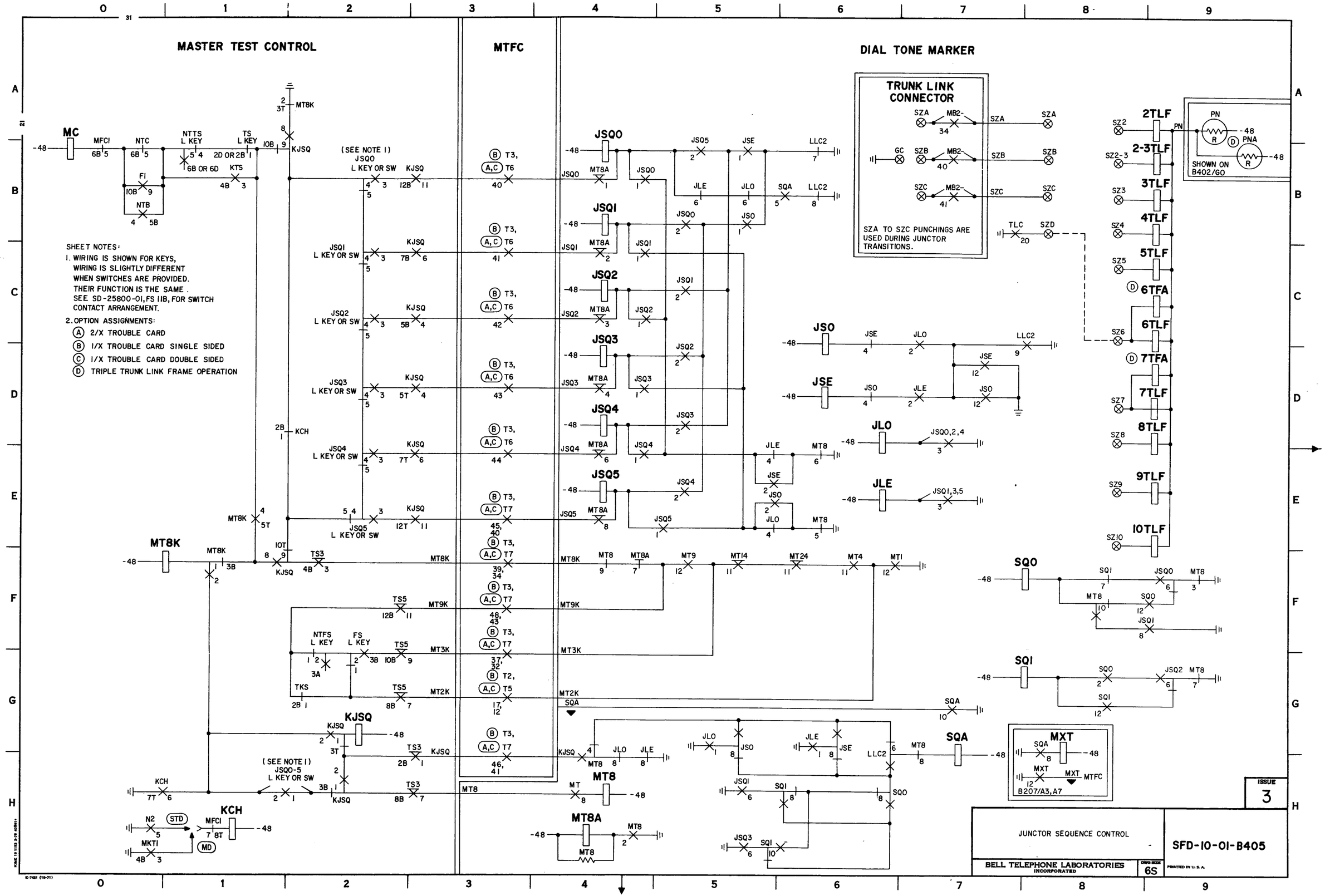

SFD-10-01-B405

DIAL TONE MARKER

JUNCTOR SUBGROUP SELECTION
FOR 2,2-3,5 AND 10 TLF SIZES
(SEE NOTE 1)

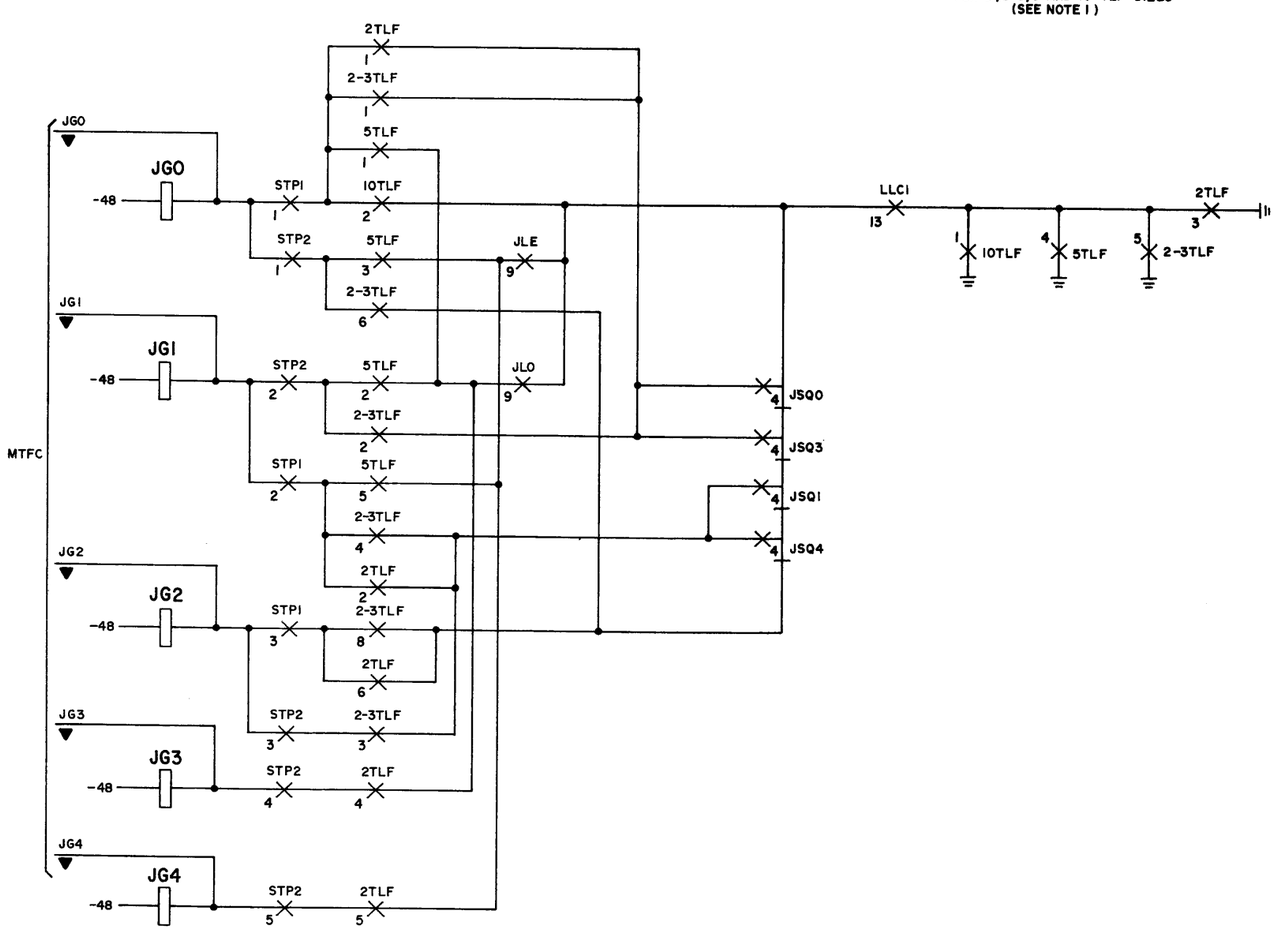

SHEET NOTES:

1. THIS IS A SIMPLIFIED DRAWING SHOWING PATHS USED FOR JUNCTOR SUBGROUP SELECTION IN 2,2-3,5 AND 10 TLF SIZES. ALL JUNCTOR SUBGROUPS FOR THESE SIZES HAVE 10 JUNCTORS.

ISSUE 3

SFD-10-01-B406

JUNCTOR SUBGROUP SELECTION
FOR 2,2-3,5 AND 10 TLF SIZES

PRINTED IN U.S.A.

SYSTEM SIZE 6S

BELL TELEPHONE LABORATORIES
INCORPORATED

E-24811-L (4-72)

SFD-10-01-B406

DIAL TONE MARKER

JUNCTOR SUBGROUP SELECTION
FOR 3,4,6,7,8,9 TLF SIZES
(SEE NOTE 1)

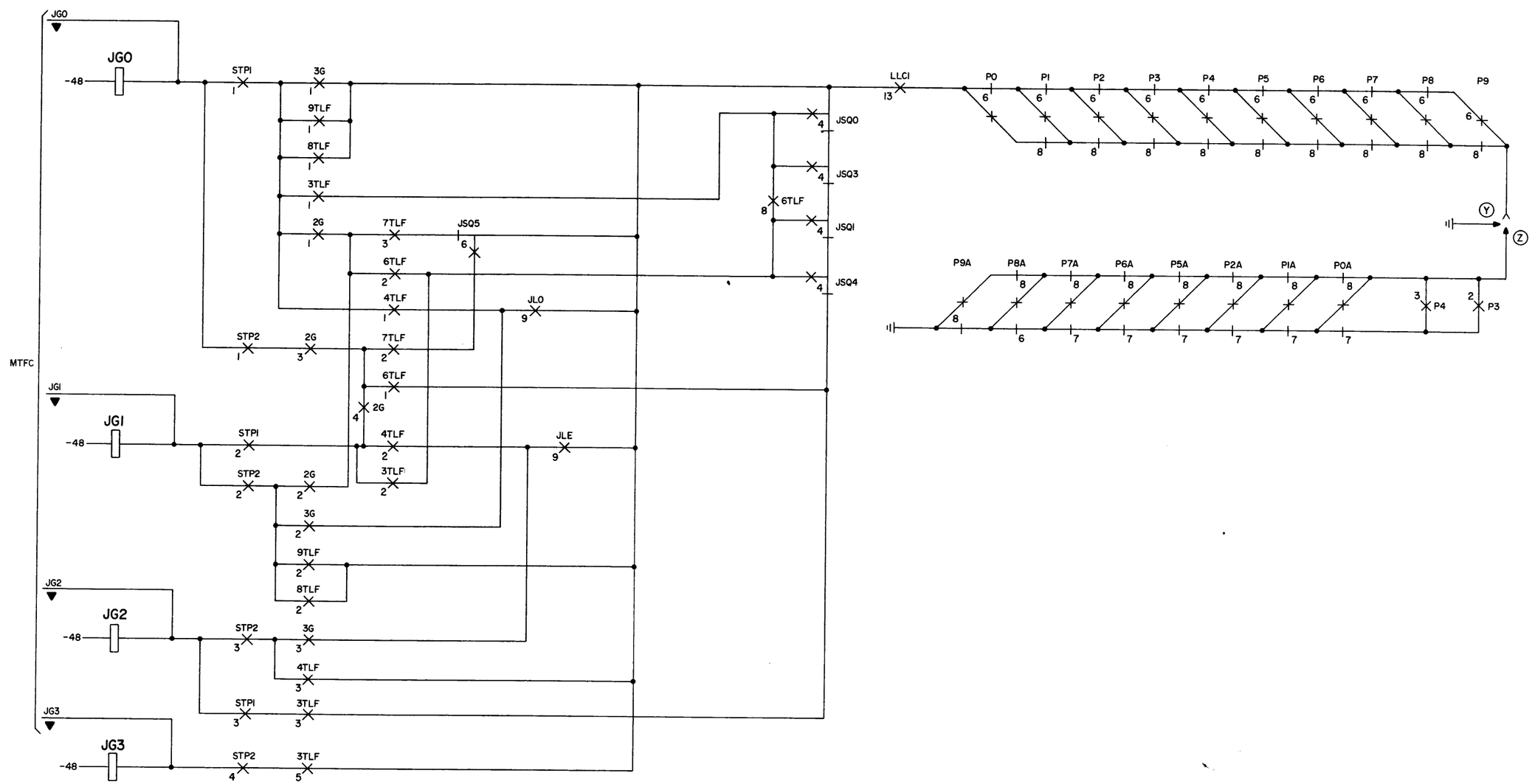

SHEET NOTES:

1. THIS IS A SIMPLIFIED DRAWING SHOWING PATHS USED FOR JUNCTOR SUBGROUP SELECTION IN 3,4,6,7,8, AND 9 TLF SIZES. EACH OF THESE SIZES HAVE ONE OR MORE JUNCTOR SUBGROUPS WITH LESS THAN 10 JUNCTORS.
2. OPTION ASSIGNMENTS:
   - (Y) 20 OR LESS TRUNK LINK FRAMES.
   - (Z) MORE THAN 20 TRUNK LINK FRAMES.

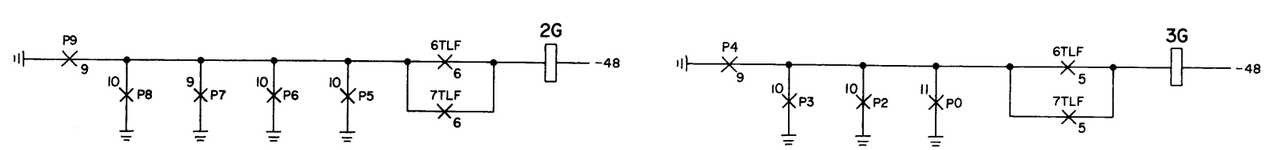

ISSUE 3

JUNCTOR SUBGROUP SELECTION
FOR 3,4,6,7,8,9 TLF SIZES

SFD-10-01-B407

BELL TELEPHONE LABORATORIES
INCORPORATED

DWG SIZE 6S

PRINTED IN U.S.A.

SFD-10-01-B407

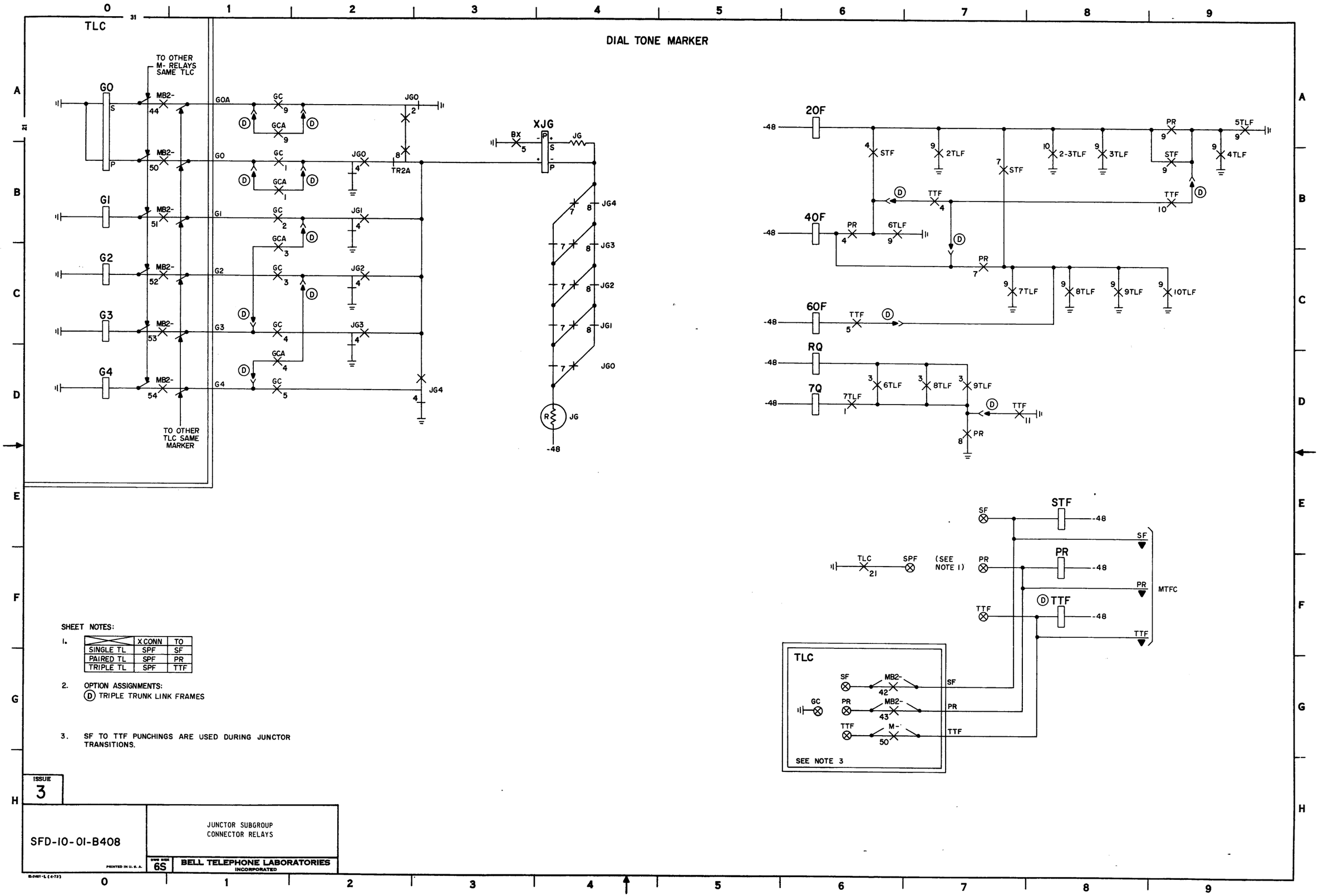

SHEET NOTES:

1.

X	X CONN	TO
SINGLE TL	SPF	SF
PAIRED TL	SPF	PR
TRIPLE TL	SPF	TTF

2. OPTION ASSIGNMENTS:
   (D) TRIPLE TRUNK LINK FRAMES

3. SF TO TTF PUNCHINGS ARE USED DURING JUNCTOR TRANSITIONS.

ISSUE 3

SFD-10-01-B408

JUNCTOR SUBGROUP CONNECTOR RELAYS

DWG SIZE 6S

BELL TELEPHONE LABORATORIES INCORPORATED

PRINTED IN U. S. A.

SFD-10-01-B408

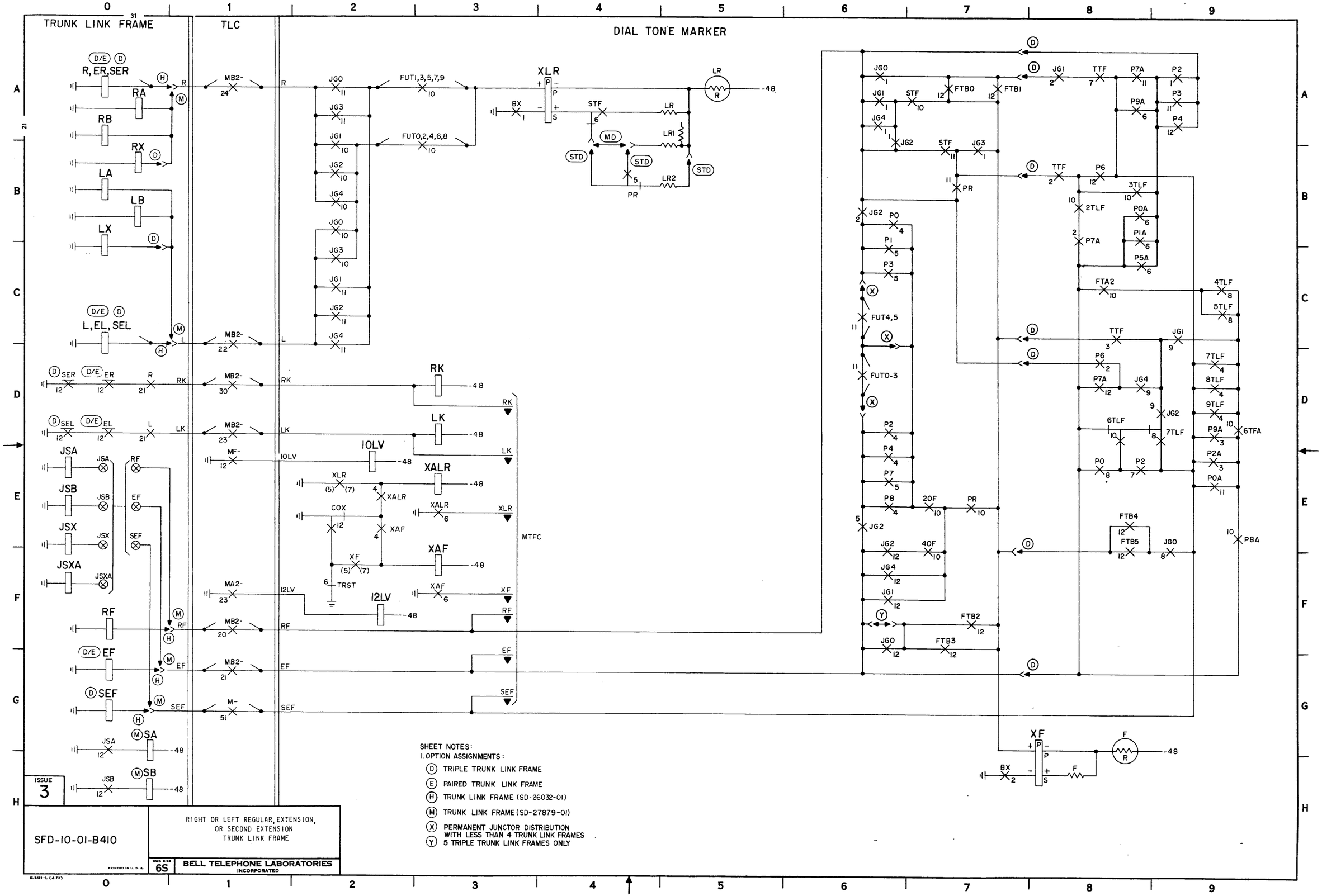

SHEET NOTES:

1. OPTION ASSIGNMENTS:

- (D) TRIPLE TRUNK LINK FRAME
- (E) PAIRED TRUNK LINK FRAME
- (H) TRUNK LINK FRAME (SD-26032-01)
- (M) TRUNK LINK FRAME (SD-27879-01)
- (X) PERMANENT JUNCTOR DISTRIBUTION WITH LESS THAN 4 TRUNK LINK FRAMES
- (Y) 5 TRIPLE TRUNK LINK FRAMES ONLY

SFD-10-01-B410

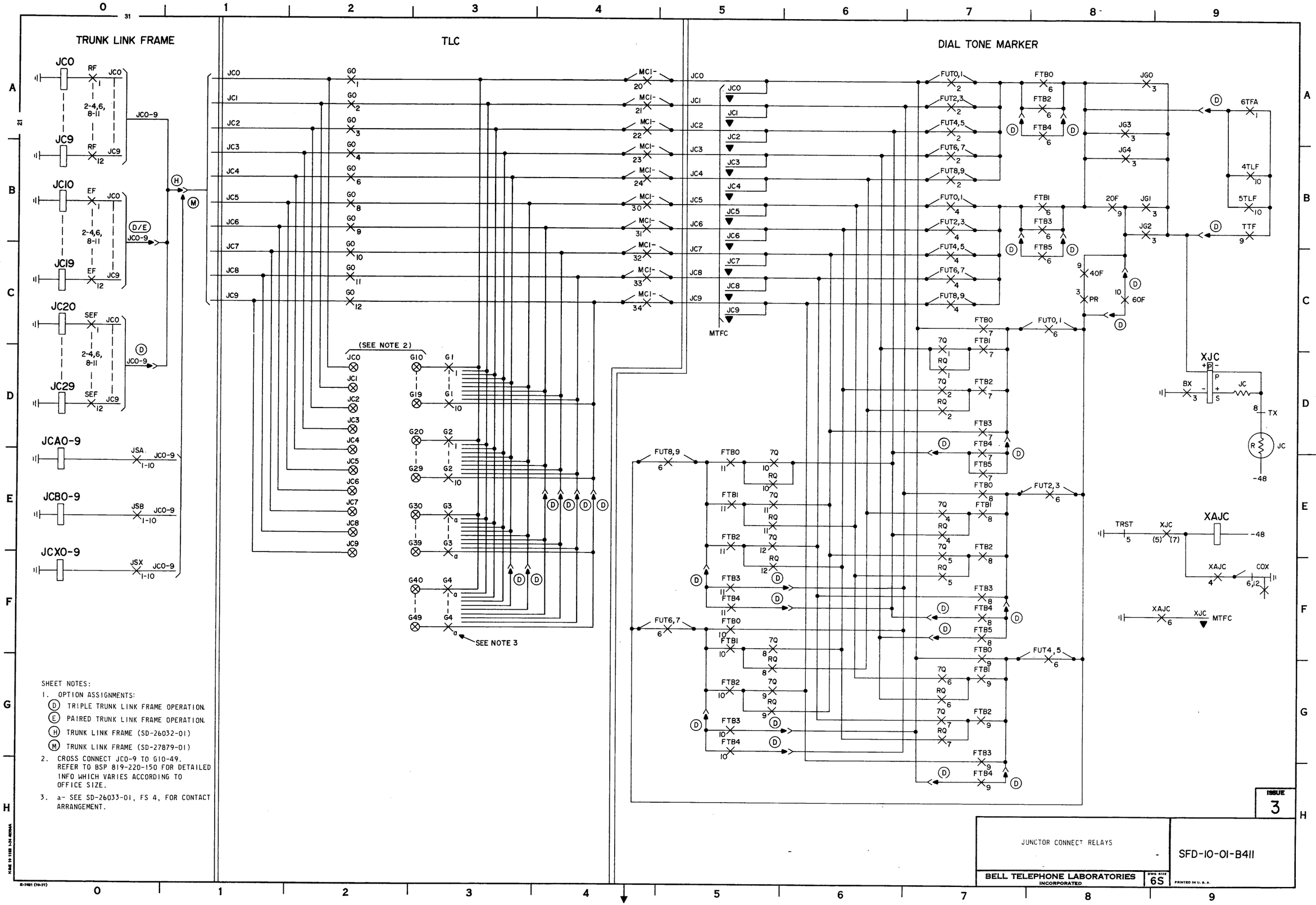

SFD-10-01-B411

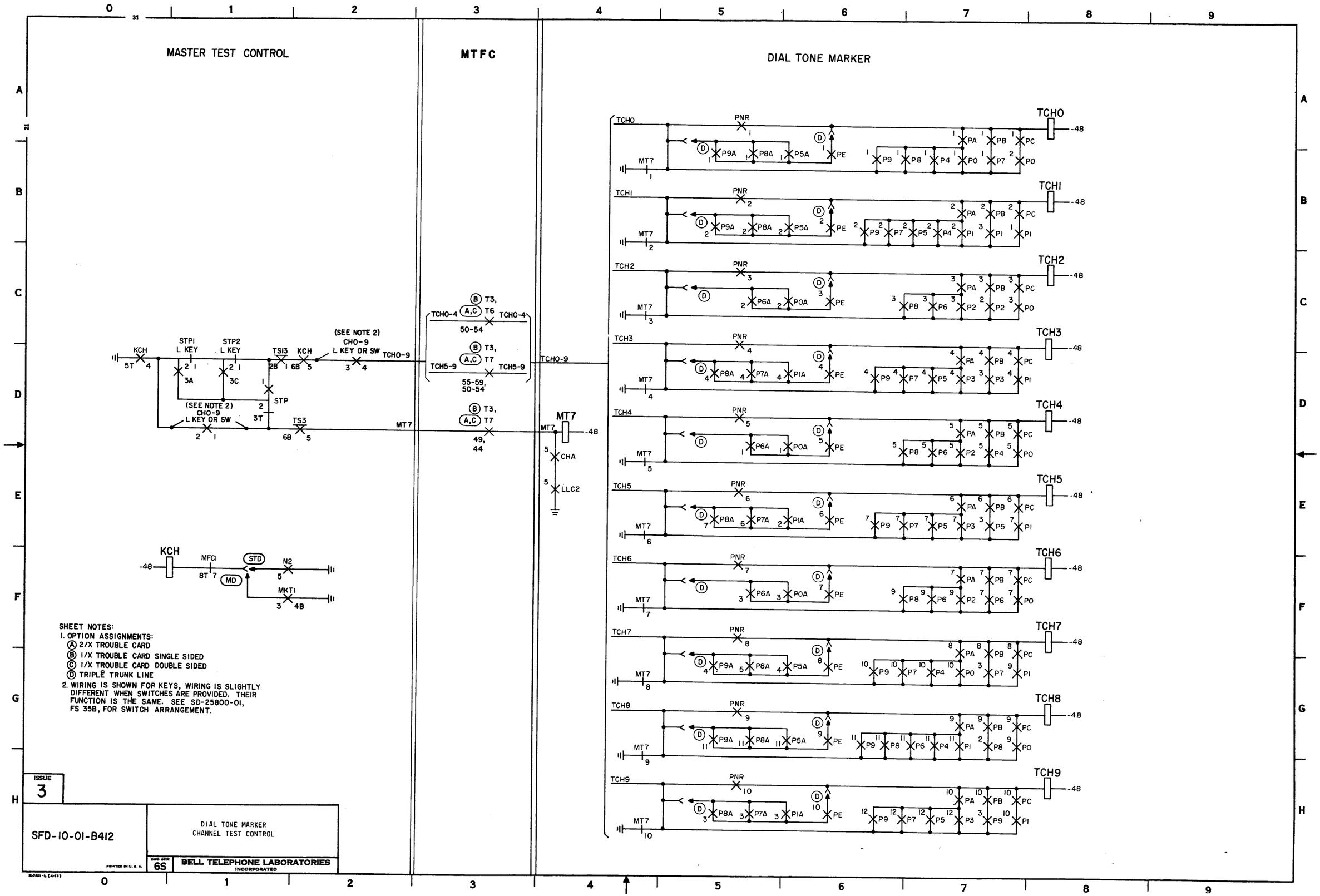
MASTER TEST CONTROL
MTFC
DIAL TONE MARKER
KCH
STP1 L KEY
STP2 L KEY
TSI3
KCH
(SEE NOTE 2) CHO-9 L KEY OR SW
TCHO-9
STP
(SEE NOTE 2) CHO-9 L KEY OR SW
TS3
MT7
TCHO-4
TCH5-9
50-54
55-59, 50-54
49, 44
CHA
LLC2
MFCI
STD
MD
N2
MKTI
PNR
PE
PA
PB
PC
PO
PI
TCHO
TCH1
TCH2
TCH3
TCH4
TCH5
TCH6
TCH7
TCH8
TCH9
SHEET NOTES:
1. OPTION ASSIGNMENTS:
(A) 2/X TROUBLE CARD
(B) 1/X TROUBLE CARD SINGLE SIDED
(C) 1/X TROUBLE CARD DOUBLE SIDED
(D) TRIPLE TRUNK LINE
2. WIRING IS SHOWN FOR KEYS, WIRING IS SLIGHTLY DIFFERENT WHEN SWITCHES ARE PROVIDED. THEIR FUNCTION IS THE SAME. SEE SD-25800-01, FS 35B, FOR SWITCH ARRANGEMENT.
ISSUE 3
SFD-10-01-B412
DIAL TONE MARKER
CHANNEL TEST CONTROL
DWG SIZE 6S
BELL TELEPHONE LABORATORIES INCORPORATED
PRINTED IN U.S.A.
SFD-10-01-B412

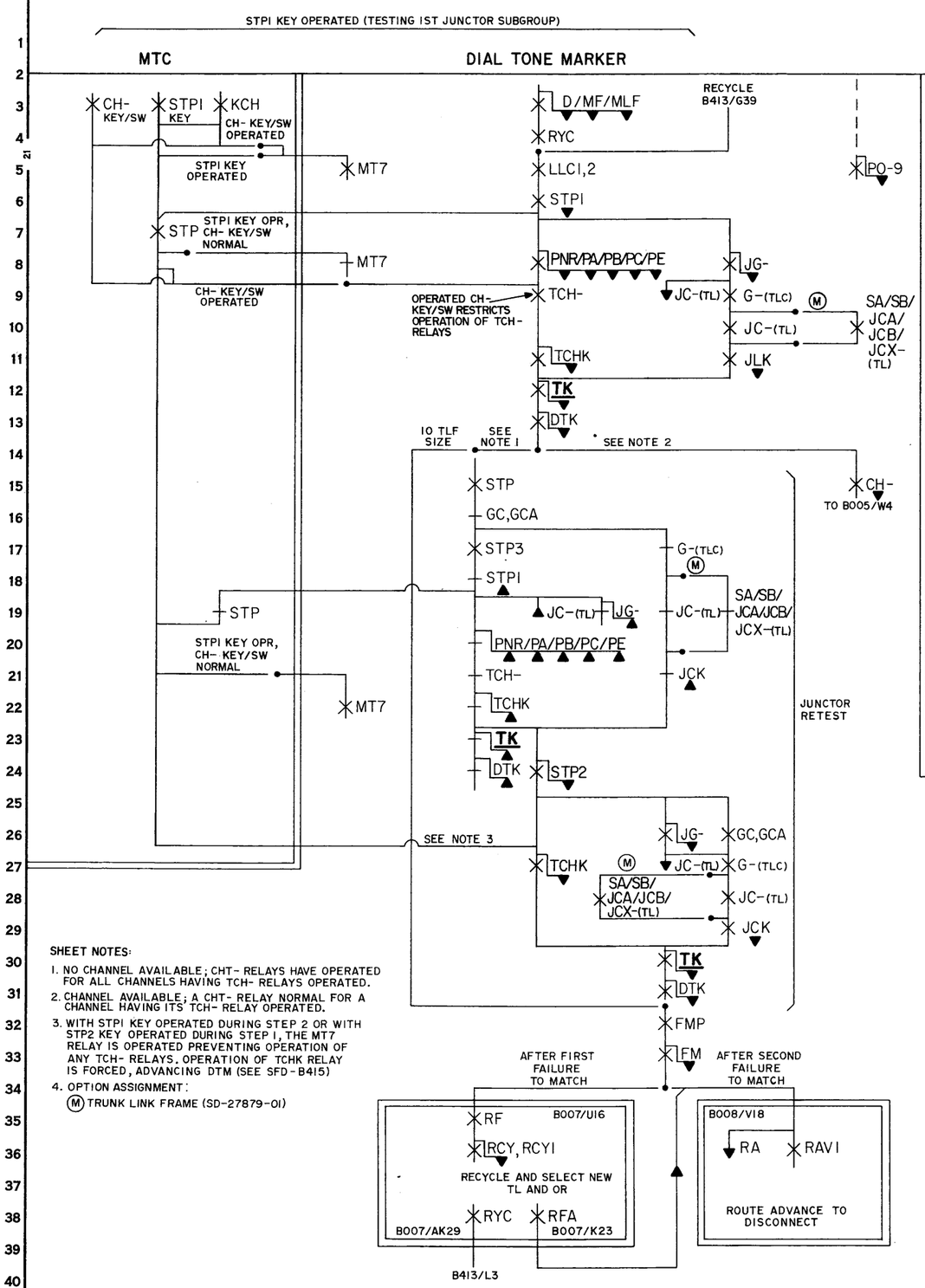

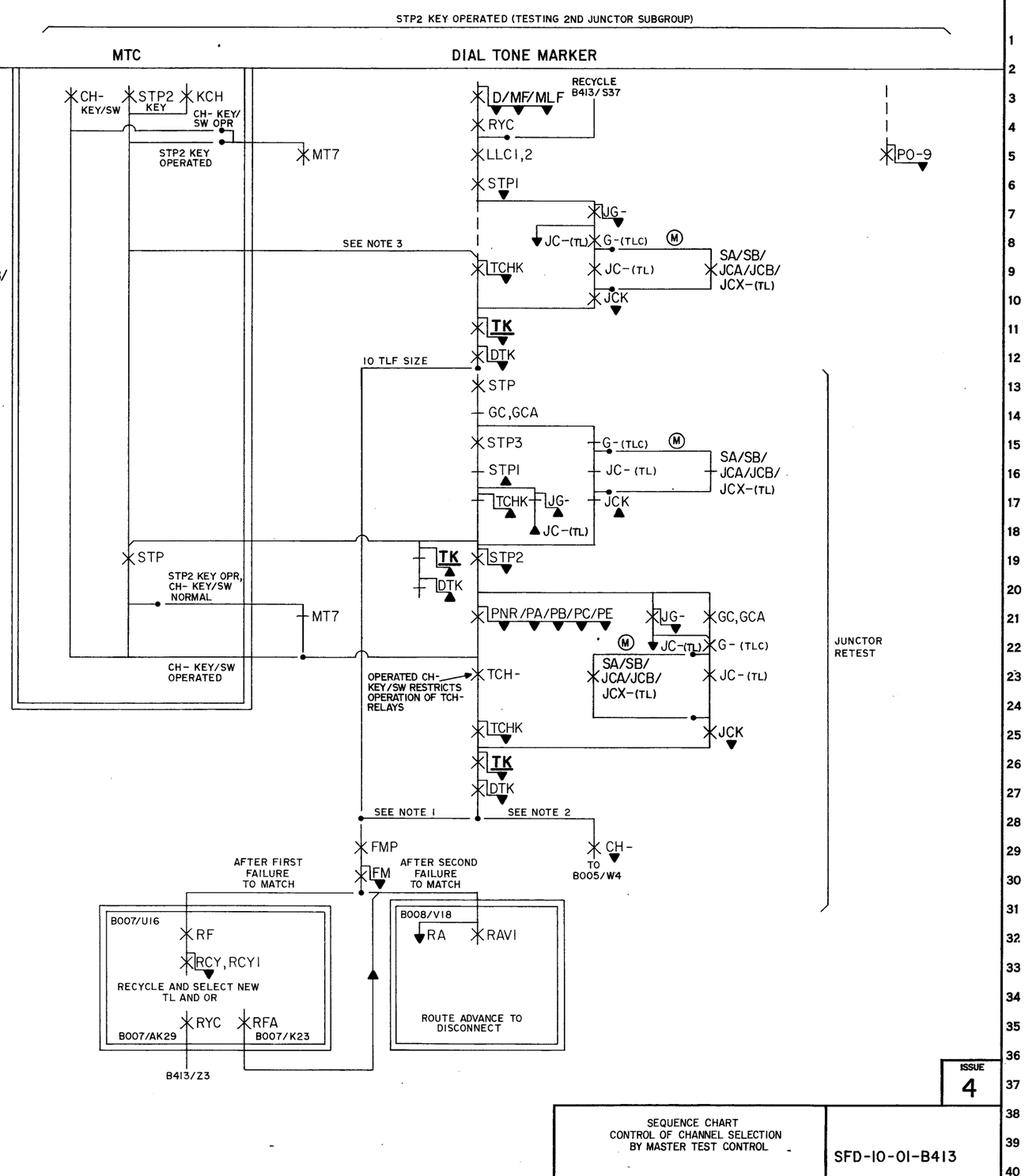

SHEET NOTES:

1. NO CHANNEL AVAILABLE; CHT- RELAYS HAVE OPERATED FOR ALL CHANNELS HAVING TCH- RELAYS OPERATED.
2. CHANNEL AVAILABLE; A CHT- RELAY NORMAL FOR A CHANNEL HAVING ITS TCH- RELAY OPERATED.
3. WITH STPI KEY OPERATED DURING STEP 2 OR WITH STP2 KEY OPERATED DURING STEP 1, THE MT7 RELAY IS OPERATED PREVENTING OPERATION OF ANY TCH- RELAYS. OPERATION OF TCHK RELAY IS FORCED, ADVANCING DTM (SEE SFD-B415)
4. OPTION ASSIGNMENT:
   (M) TRUNK LINK FRAME (SD-27879-01)

ISSUE 4

SEQUENCE CHART
CONTROL OF CHANNEL SELECTION
BY MASTER TEST CONTROL

SFD-10-01-B413

BELL TELEPHONE LABORATORIES INCORPORATED

DWG SIZE 6S

PRINTED IN U.S.A.

E-7421-B (10-71)

SFD-10-01-B413

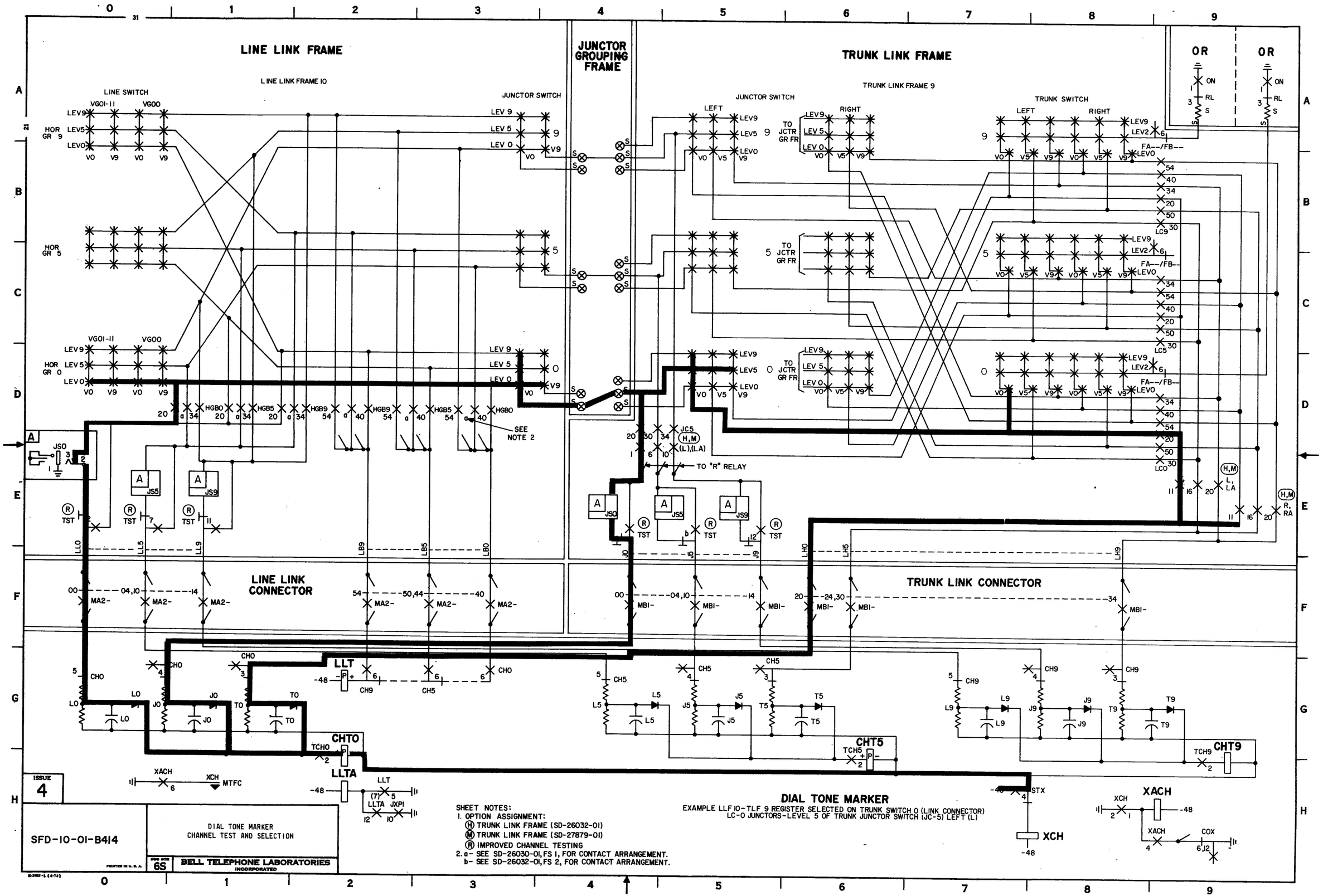
LINE LINK FRAME
LINE LINK FRAME 10
LINE SWITCH
JUNCTOR SWITCH
JUNCTOR GROUPING FRAME
TRUNK LINK FRAME
TRUNK LINK FRAME 9
JUNCTOR SWITCH
TRUNK SWITCH
LEFT
RIGHT
TO JCTR GR FR
OR
ON
RL
HOR GR 9
HOR GR 5
HOR GR 0
SEE NOTE 2
TO "R" RELAY
LINE LINK CONNECTOR
TRUNK LINK CONNECTOR
LLT
LLTA
CHTO
CHT5
CHT9
XACH
XCH
MTFC
COX
DIAL TONE MARKER
EXAMPLE LLF 10-TLF 9 REGISTER SELECTED ON TRUNK SWITCH 0 (LINK CONNECTOR)
LC-0 JUNCTORS-LEVEL 5 OF TRUNK JUNCTOR SWITCH (JC-5) LEFT (L)
SHEET NOTES:
1. OPTION ASSIGNMENT:
(H) TRUNK LINK FRAME (SD-26032-01)
(M) TRUNK LINK FRAME (SD-27879-01)
(R) IMPROVED CHANNEL TESTING
2. a- SEE SD-26030-01, FS 1, FOR CONTACT ARRANGEMENT.
b- SEE SD-26032-01, FS 2, FOR CONTACT ARRANGEMENT.
ISSUE 4
SFD-10-01-B414
DIAL TONE MARKER
CHANNEL TEST AND SELECTION
BELL TELEPHONE LABORATORIES
INCORPORATED
SFD-10-01-B414
2 SHEETS, SH 1

DIAL TONE MARKER

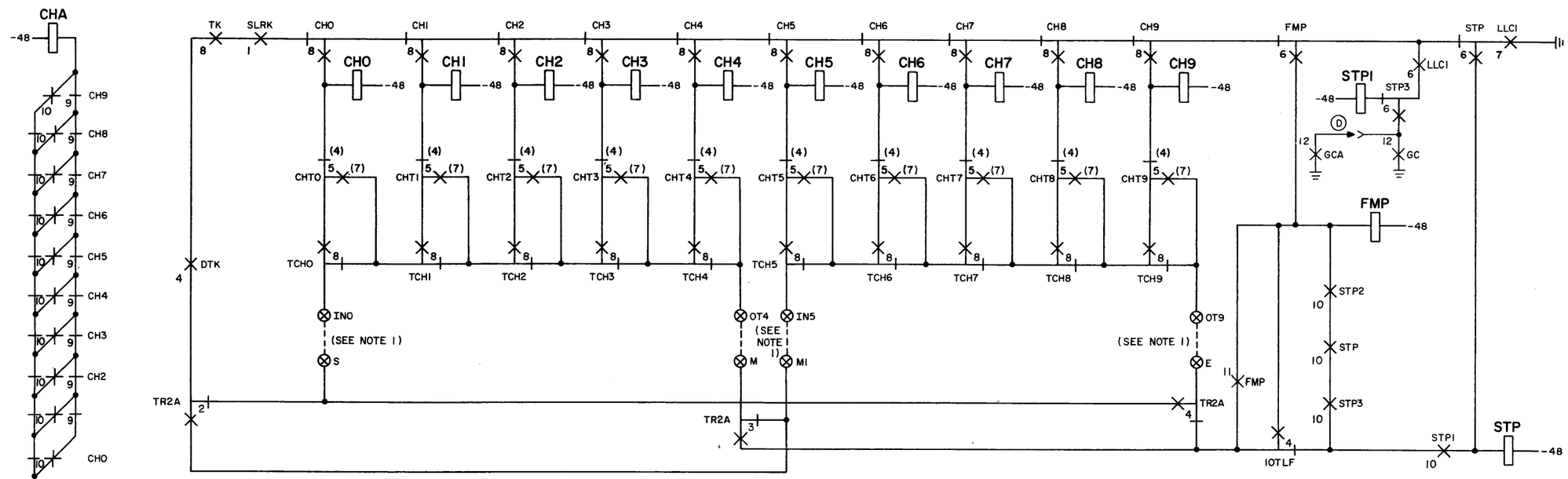

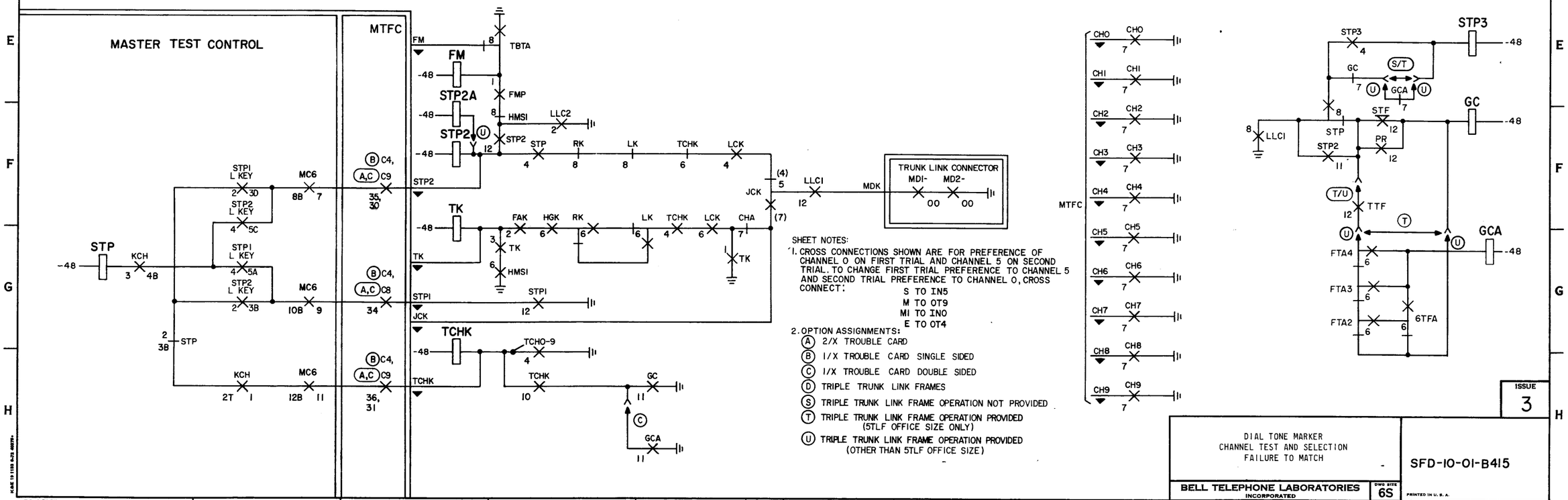

SHEET NOTES:

1. CROSS CONNECTIONS SHOWN ARE FOR PREFERENCE OF CHANNEL 0 ON FIRST TRIAL AND CHANNEL 5 ON SECOND TRIAL. TO CHANGE FIRST TRIAL PREFERENCE TO CHANNEL 5 AND SECOND TRIAL PREFERENCE TO CHANNEL 0, CROSS CONNECT:
   - S TO IN5
   - M TO OT9
   - M1 TO IN0
   - E TO OT4
2. OPTION ASSIGNMENTS:
   - (A) 2/X TROUBLE CARD
   - (B) 1/X TROUBLE CARD SINGLE SIDED
   - (C) 1/X TROUBLE CARD DOUBLE SIDED
   - (D) TRIPLE TRUNK LINK FRAMES
   - (S) TRIPLE TRUNK LINK FRAME OPERATION NOT PROVIDED
   - (T) TRIPLE TRUNK LINK FRAME OPERATION PROVIDED (5TLF OFFICE SIZE ONLY)
   - (U) TRIPLE TRUNK LINK FRAME OPERATION PROVIDED (OTHER THAN 5TLF OFFICE SIZE)

ISSUE 3

DIAL TONE MARKER
CHANNEL TEST AND SELECTION
FAILURE TO MATCH

SFD-10-01-B415

BELL TELEPHONE LABORATORIES INCORPORATED

DWG SIZE 6S

PRINTED IN U. S. A.

SFD-10-01-B415

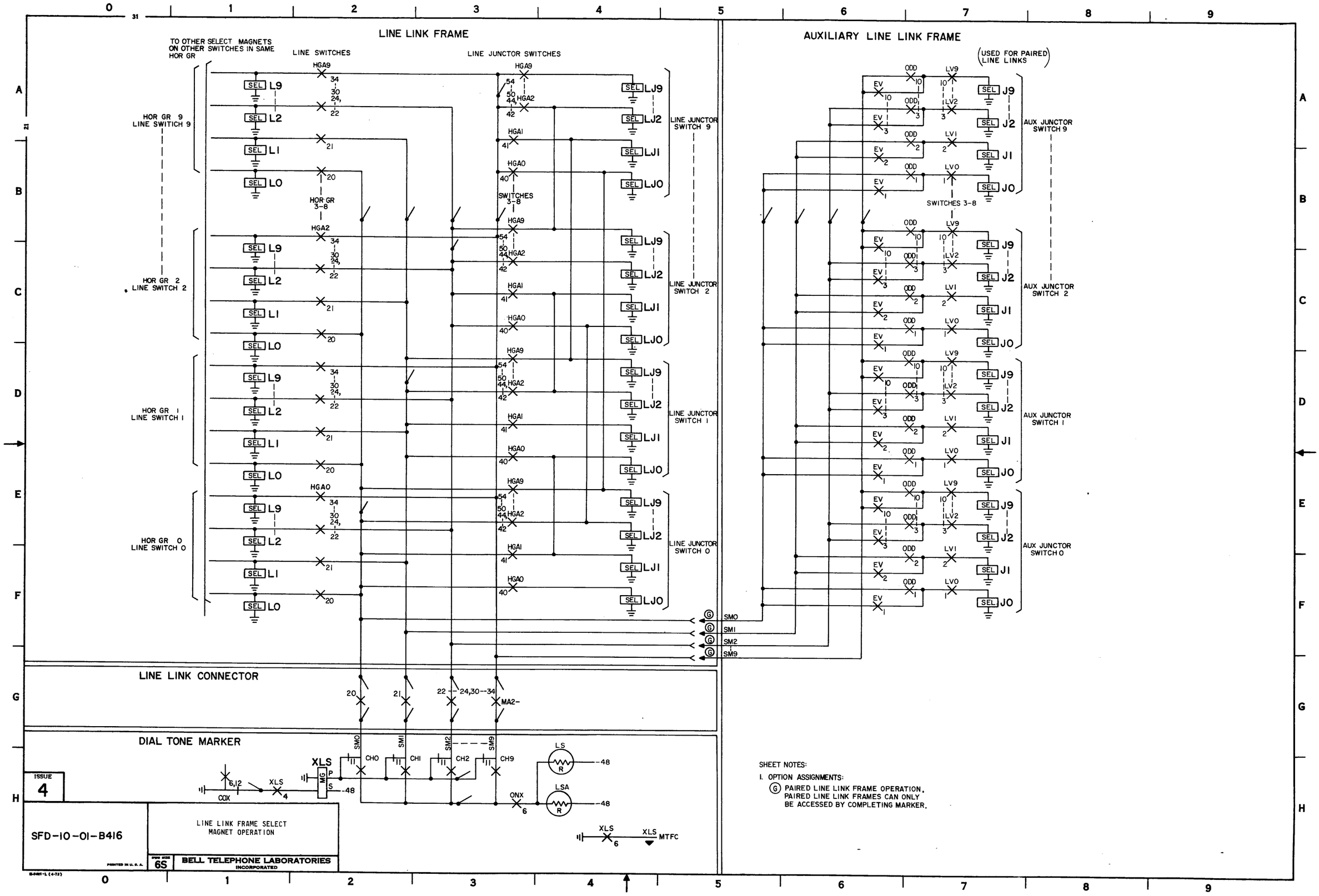
LINE LINK FRAME
TO OTHER SELECT MAGNETS ON OTHER SWITCHES IN SAME HOR GR
LINE SWITCHES
LINE JUNCTOR SWITCHES
HOR GR 9 LINE SWITCH 9
HOR GR 2 LINE SWITCH 2
HOR GR 1 LINE SWITCH 1
HOR GR 0 LINE SWITCH 0
LINE JUNCTOR SWITCH 9
LINE JUNCTOR SWITCH 2
LINE JUNCTOR SWITCH 1
LINE JUNCTOR SWITCH 0
HOR GR 3-8
SWITCHES 3-8
AUXILIARY LINE LINK FRAME
(USED FOR PAIRED LINE LINKS)
AUX JUNCTOR SWITCH 9
AUX JUNCTOR SWITCH 2
AUX JUNCTOR SWITCH 1
AUX JUNCTOR SWITCH 0
SWITCHES 3-8
LINE LINK CONNECTOR
DIAL TONE MARKER
XLS
COX
ONX
LS
LSA
MTFC
SHEET NOTES:
1. OPTION ASSIGNMENTS:
(G) PAIRED LINE LINK FRAME OPERATION. PAIRED LINE LINK FRAMES CAN ONLY BE ACCESSED BY COMPLETING MARKER.
ISSUE 4
SFD-10-01-B416
LINE LINK FRAME SELECT MAGNET OPERATION
BELL TELEPHONE LABORATORIES INCORPORATED
6S
SFD-10-01-B416

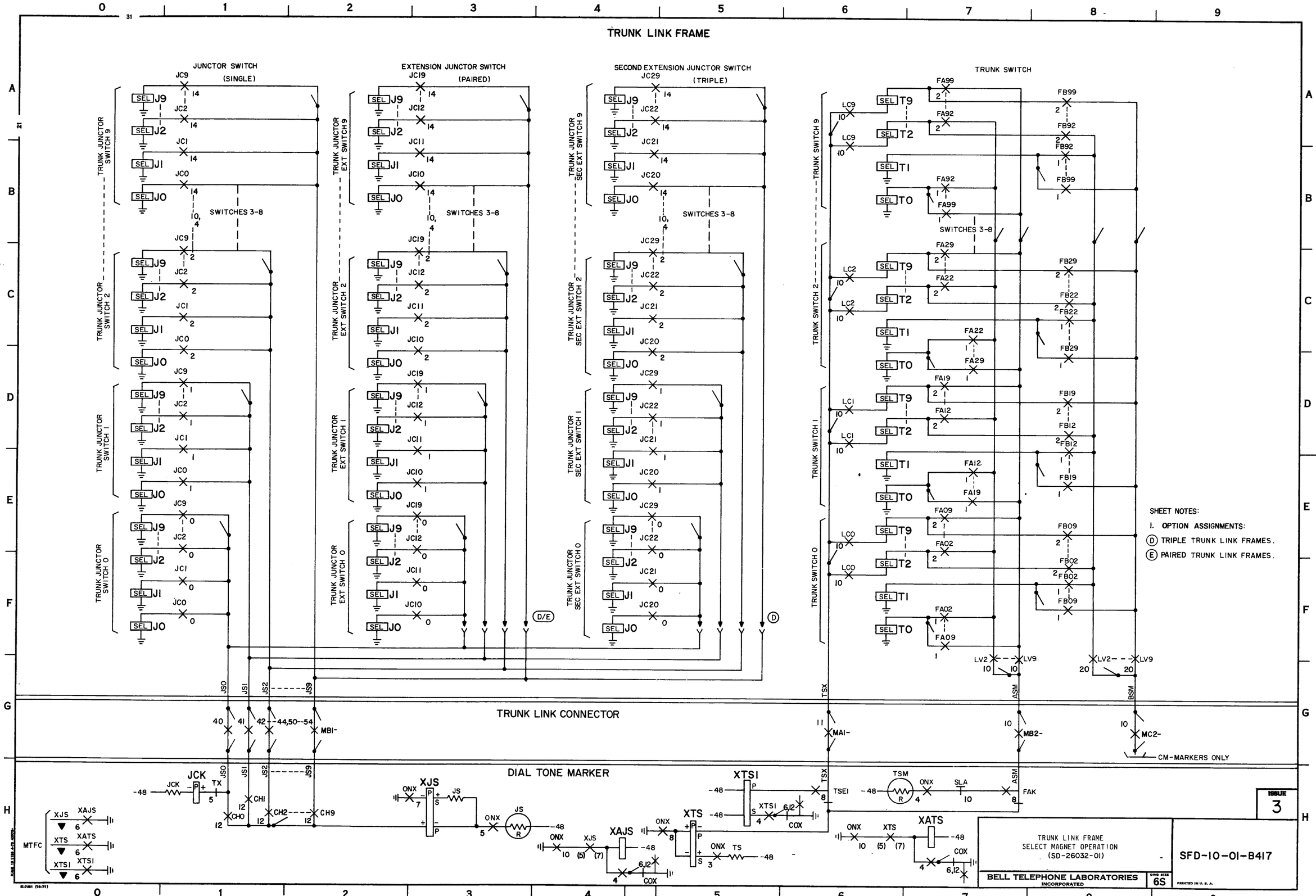

SFD-10-01-B417

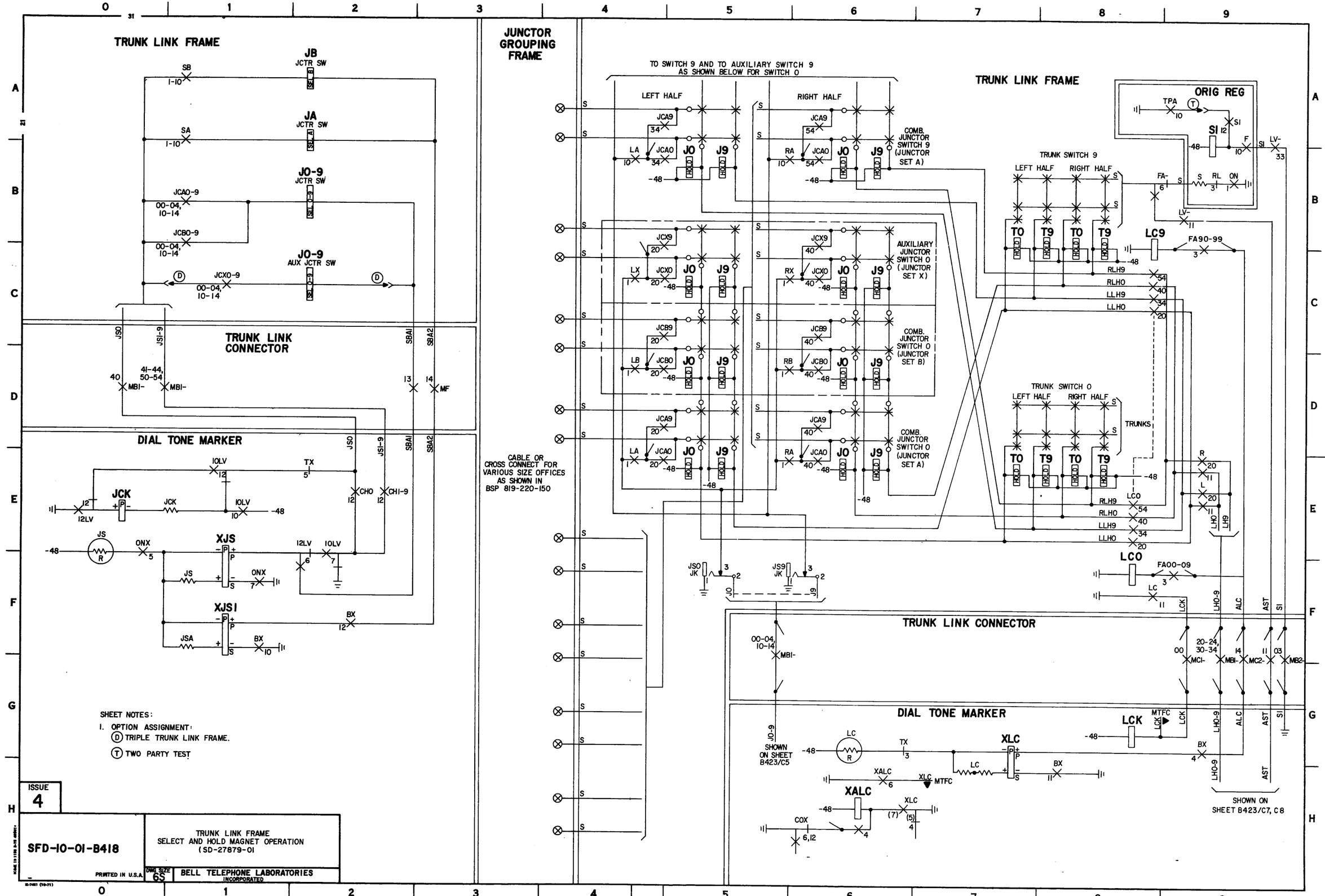

SHEET NOTES:

1. OPTION ASSIGNMENT:
   - (D) TRIPLE TRUNK LINK FRAME.
   - (T) TWO PARTY TEST

ISSUE 4

SFD-10-01-B418

TRUNK LINK FRAME
SELECT AND HOLD MAGNET OPERATION
(SD-27879-01

PRINTED IN U.S.A.

DWG SIZE 6S

BELL TELEPHONE LABORATORIES INCORPORATED

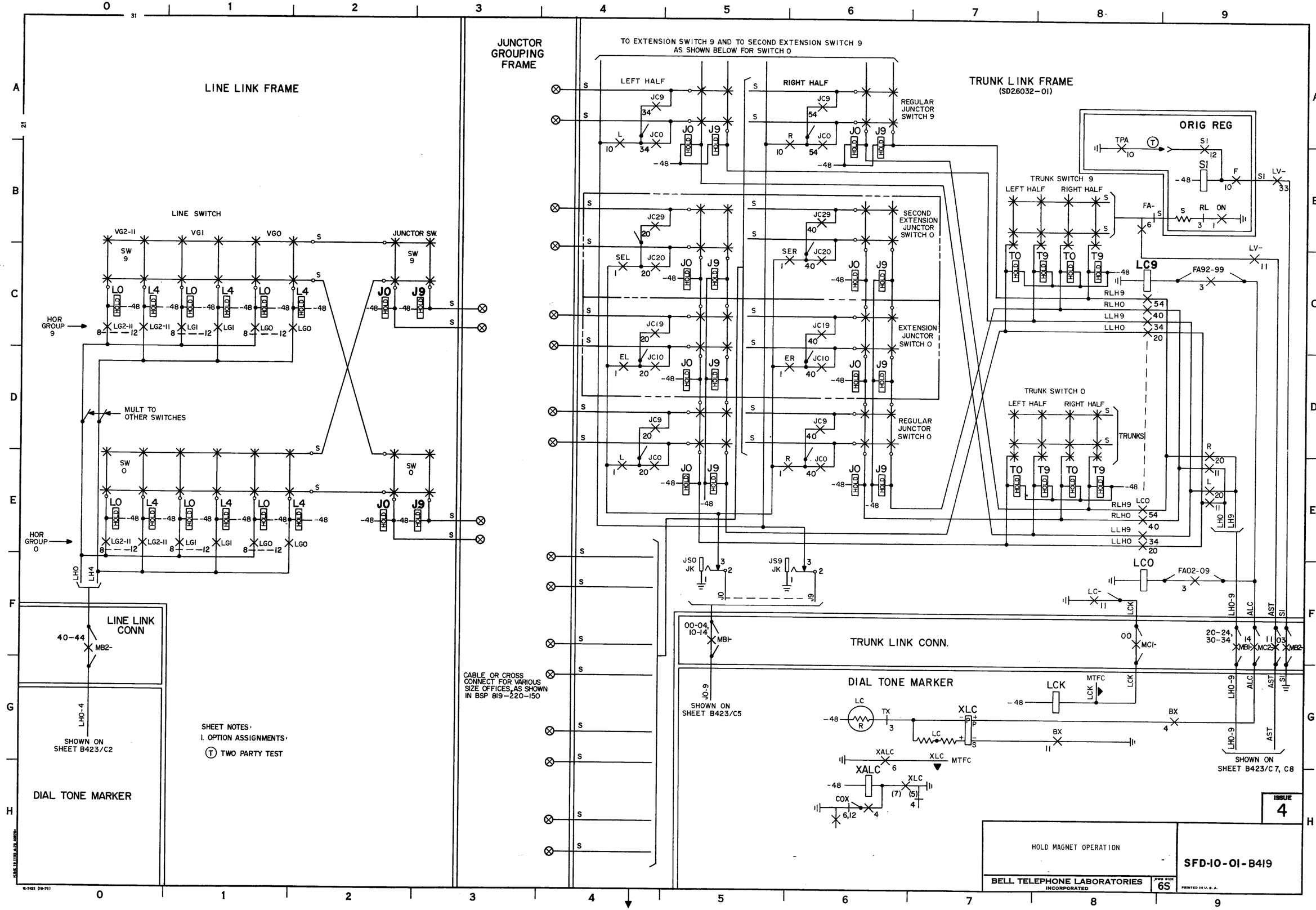

SFD-10-01-B419

DIAL TONE MARKER

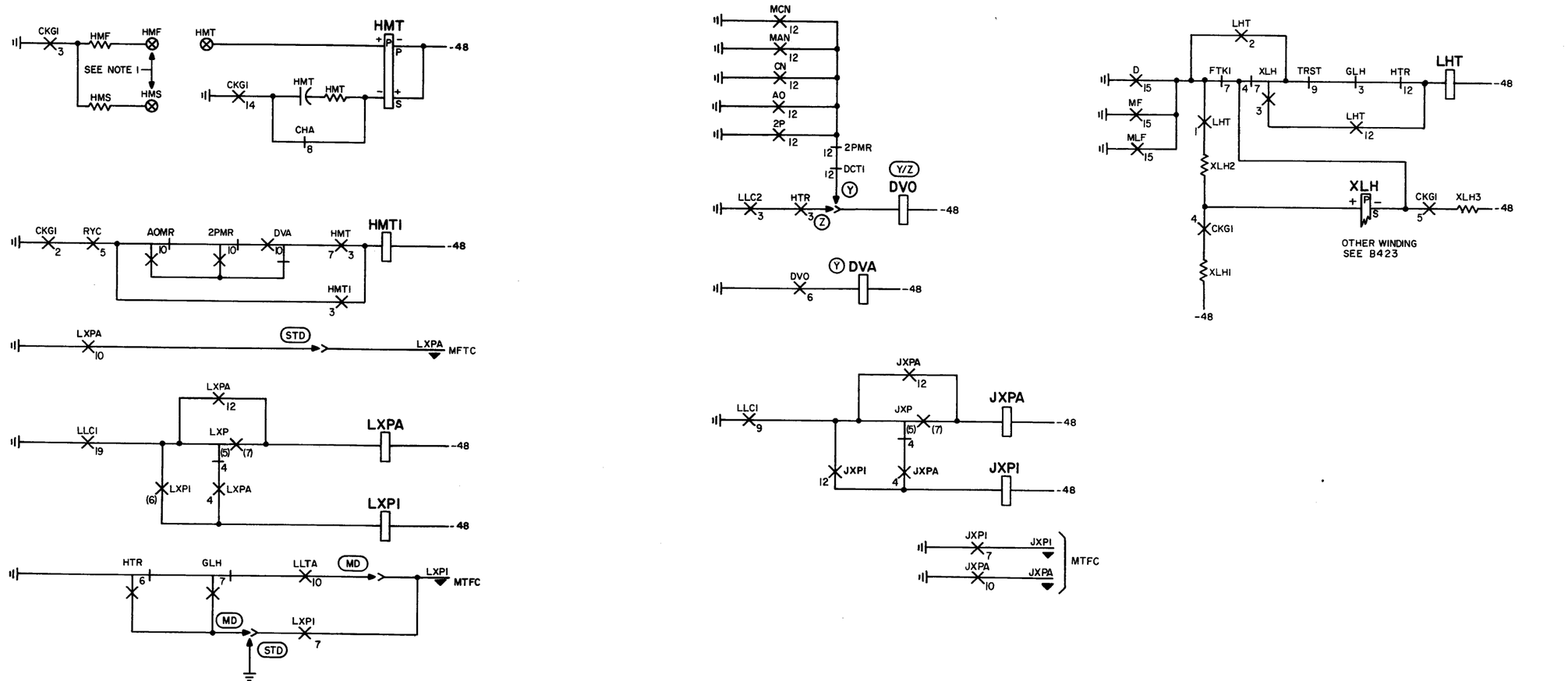

SHEET NOTES:

1. CROSS CONNECT HMF TO HMT WHEN ALL SWITCHES ARE EQUIPPED WITH DAMPING CONES (26-30ms TIMING). CROSS CONNECT HMS TO HMT WHEN ANY SWITCH OR SWITCHES ARE NOT EQUIPPED WITH DAMPING CONES (40.5-50ms TIMING).

2. OPTION ASSIGNMENTS:

FEATURE		PROV
DUAL VOLTAGE OPERATION	STANDARD	Y
	MD	Z

ISSUE 4

SFD-10-01-B420

HOLD MAGNET TIMING AND CONTROL

DWG SIZE 6S

BELL TELEPHONE LABORATORIES INCORPORATED

PRINTED IN U.S.A.

SFD-10-01-B420

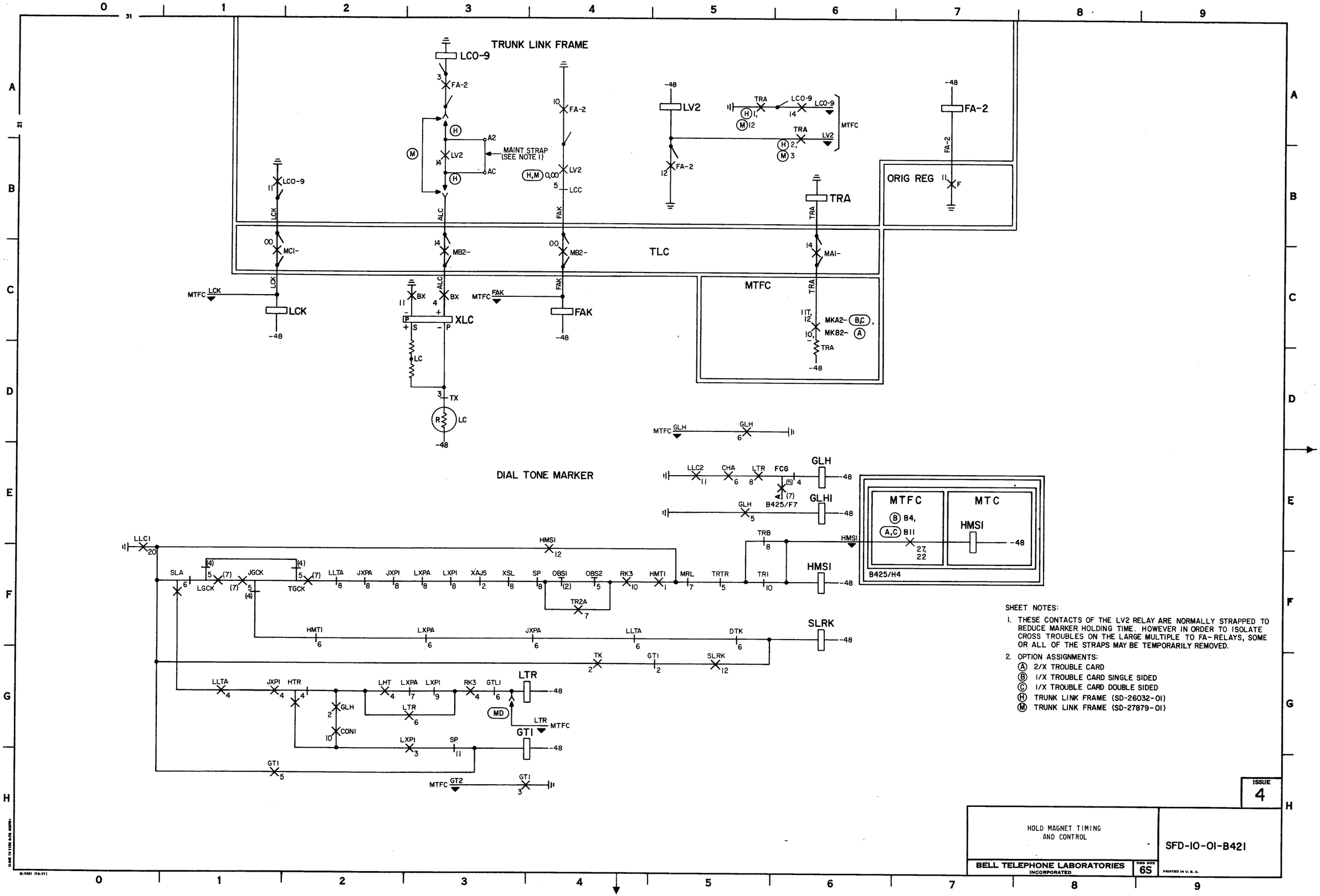

SFD-10-01-B421

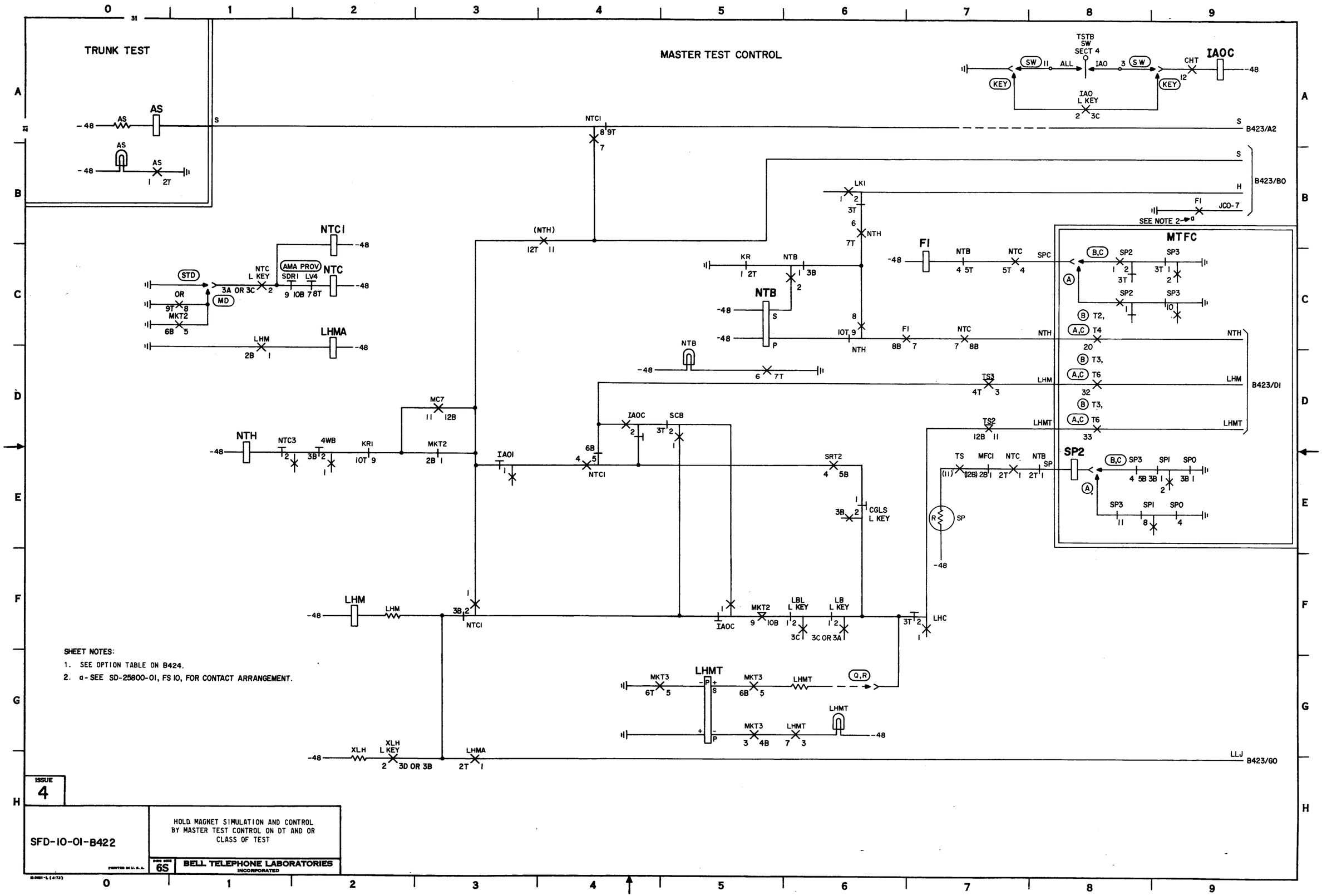
TRUNK TEST
MASTER TEST CONTROL
AS
NTCI
NTC
LHMA
NTB
NTH
LHM
LHMT
FI
SP2
MTFC
IAOC
B423/A2
B423/B0
B423/DI
B423/G0
SEE NOTE 2
SHEET NOTES:
1. SEE OPTION TABLE ON B424.
2. a - SEE SD-25800-01, FS 10, FOR CONTACT ARRANGEMENT.
ISSUE 4
SFD-10-01-B422
HOLD MAGNET SIMULATION AND CONTROL BY MASTER TEST CONTROL ON DT AND OR CLASS OF TEST
BELL TELEPHONE LABORATORIES INCORPORATED
SFD-10-01-B422

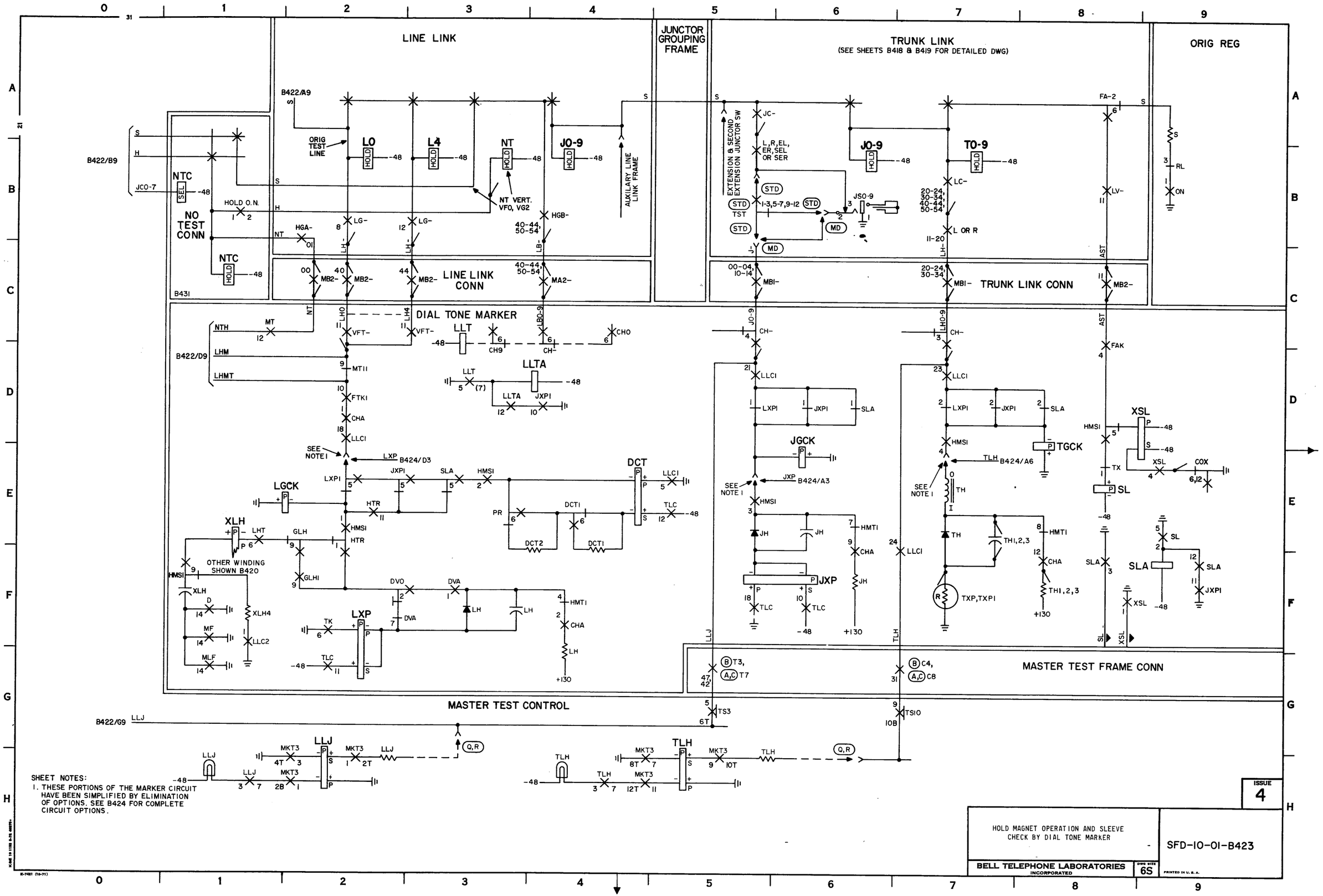
LINE LINK
JUNCTOR GROUPING FRAME
TRUNK LINK
(SEE SHEETS B418 & B419 FOR DETAILED DWG)
ORIG REG
NO TEST CONN
LINE LINK CONN
DIAL TONE MARKER
TRUNK LINK CONN
MASTER TEST CONTROL
MASTER TEST FRAME CONN
ORIG TEST LINE
NT VERT. VFO, VG2
AUXILARY LINE LINK FRAME
EXTENSION & SECOND EXTENSION JUNCTOR SW
OTHER WINDING SHOWN B420
SEE NOTE 1
B422/A9
B422/B9
B422/D9
B422/G9
B424/D3
B424/A3
B424/A6
B431
SHEET NOTES:
1. THESE PORTIONS OF THE MARKER CIRCUIT HAVE BEEN SIMPLIFIED BY ELIMINATION OF OPTIONS. SEE B424 FOR COMPLETE CIRCUIT OPTIONS.
ISSUE 4
HOLD MAGNET OPERATION AND SLEEVE CHECK BY DIAL TONE MARKER
SFD-10-01-B423
BELL TELEPHONE LABORATORIES INCORPORATED
DWG SIZE 6S
PRINTED IN U.S.A.
SFD-10-01-B423

DIAL TONE MARKER

TABLE OF OPTIONS SHOWN ON B422, B423, B424			
FEATURE OR OPTION		NOT PROV	PROV
2/X TROUBLE CARD			A
1/X TROUBLE CARD SINGLE SIDED			B
1/X TROUBLE CARD DOUBLE SIDED			C
WIDE BAND CENTREX		T	U
TRIPLE TRUNK LINK FRAMES		W	D
PHASE 3 CENTREX		Y	Z
12 LEVEL SWITCHES ON TRUNK LINK FRAME		N	
	10 & 12 LEVEL SWITCHES		H
	ALL 12 LEVEL SWITCHES		M
PAIRED LINE LINK FRAMES		X	E
DUAL VOLTAGE OPERATION OF ALL HOLD MAGNETS EXCEPT FOR MESSAGE REGISTER LINES		P	
	STANDARD		Q
	MFR DISC		R
MORE THAN ONE GROUP OF ORIG REG			S

B423 IS DRAWN TO INCLUDE OPTIONS A,N,Q,T,W,X & Y

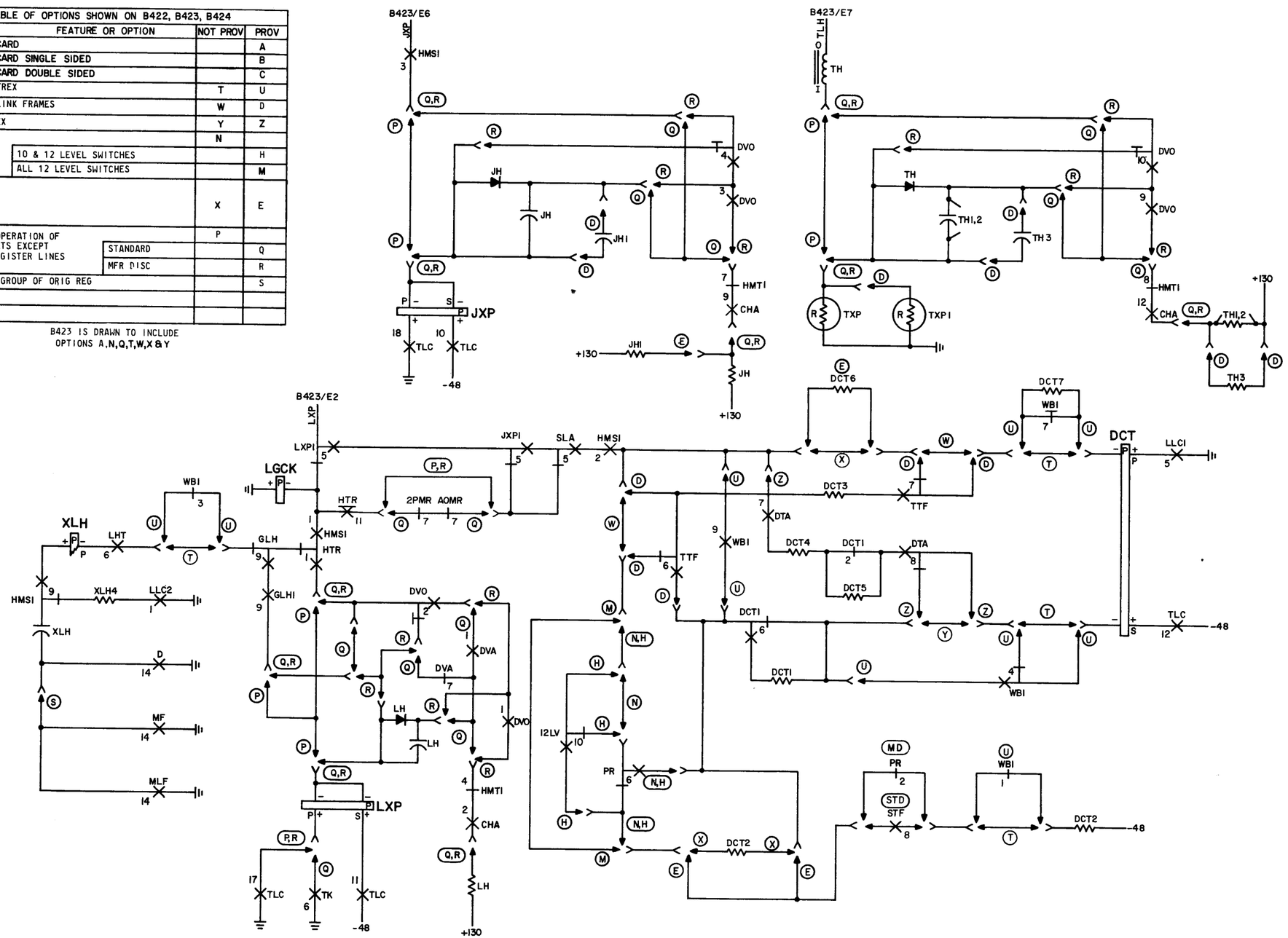

ISSUE 3

SFD-10-01-B424

OPTIONAL ARRANGEMENTS OF HOLD MAGNET OPERATION AND SLEEVE CHECK BY DIAL TONE MARKER

DWG SIZE 6S

BELL TELEPHONE LABORATORIES INCORPORATED

PRINTED IN U.S.A.

E-2481-1 (4-72)

SFD-10-01-B424

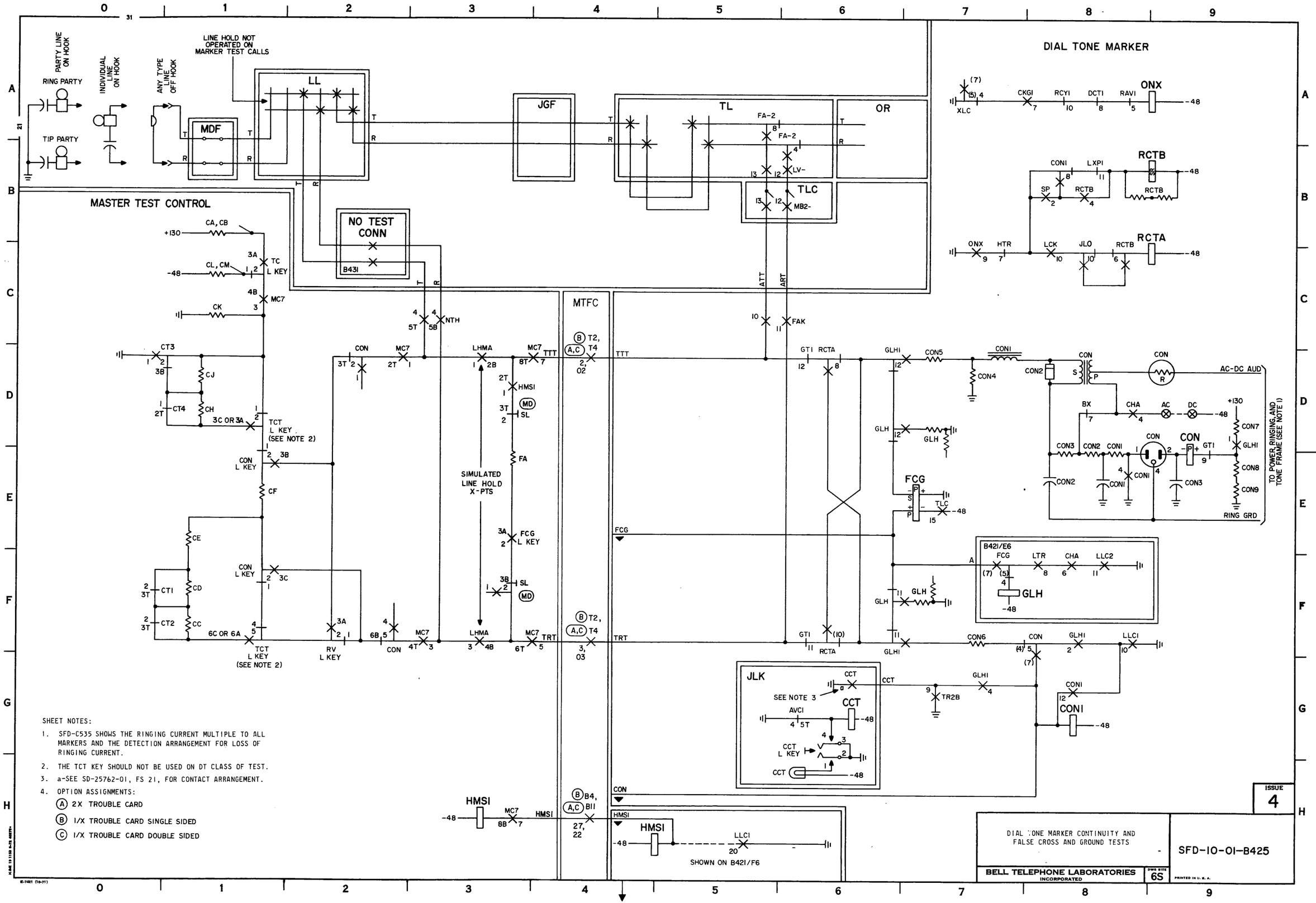

SFD-10-01-B425

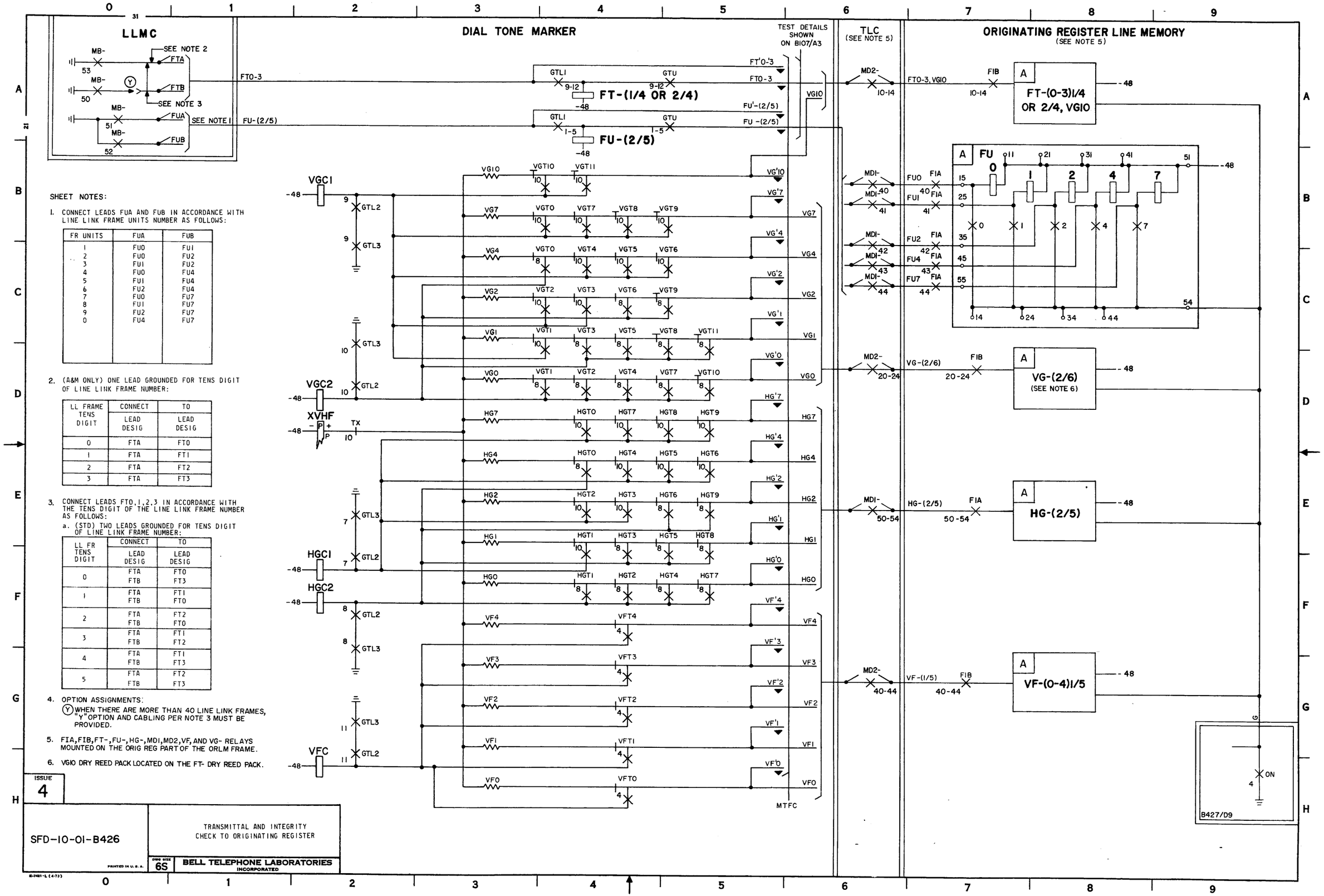

SHEET NOTES:

1. CONNECT LEADS FUA AND FUB IN ACCORDANCE WITH LINE LINK FRAME UNITS NUMBER AS FOLLOWS:

FR UNITS	FUA	FUB
1	FU0	FU1
2	FU0	FU2
3	FU1	FU2
4	FU0	FU4
5	FU1	FU4
6	FU2	FU4
7	FU0	FU7
8	FU1	FU7
9	FU2	FU7
0	FU4	FU7

2. (A&M ONLY) ONE LEAD GROUNDED FOR TENS DIGIT OF LINE LINK FRAME NUMBER:

LL FRAME TENS DIGIT	CONNECT	TO
	LEAD DESIG	LEAD DESIG
0	FTA	FT0
1	FTA	FT1
2	FTA	FT2
3	FTA	FT3

3. CONNECT LEADS FT0,1,2,3 IN ACCORDANCE WITH THE TENS DIGIT OF THE LINE LINK FRAME NUMBER AS FOLLOWS:
   a. (STD) TWO LEADS GROUNDED FOR TENS DIGIT OF LINE LINK FRAME NUMBER:

LL FR TENS DIGIT	CONNECT	TO
	LEAD DESIG	LEAD DESIG
0	FTA FTB	FT0 FT3
1	FTA FTB	FT1 FT0
2	FTA FTB	FT2 FT0
3	FTA FTB	FT1 FT2
4	FTA FTB	FT1 FT3
5	FTA FTB	FT2 FT3

4. OPTION ASSIGNMENTS:
   (Y) WHEN THERE ARE MORE THAN 40 LINE LINK FRAMES, "Y" OPTION AND CABLING PER NOTE 3 MUST BE PROVIDED.

5. FIA, FIB, FT-, FU-, HG-, MD1, MD2, VF, AND VG- RELAYS MOUNTED ON THE ORIG REG PART OF THE ORLM FRAME.

6. VGIO DRY REED PACK LOCATED ON THE FT- DRY REED PACK.

ISSUE 4

SFD-10-01-B426

TRANSMITTAL AND INTEGRITY CHECK TO ORIGINATING REGISTER

DWG SIZE 6S

BELL TELEPHONE LABORATORIES INCORPORATED

PRINTED IN U.S.A.

E-7481-L (4-73)

SFD-10-01-B426

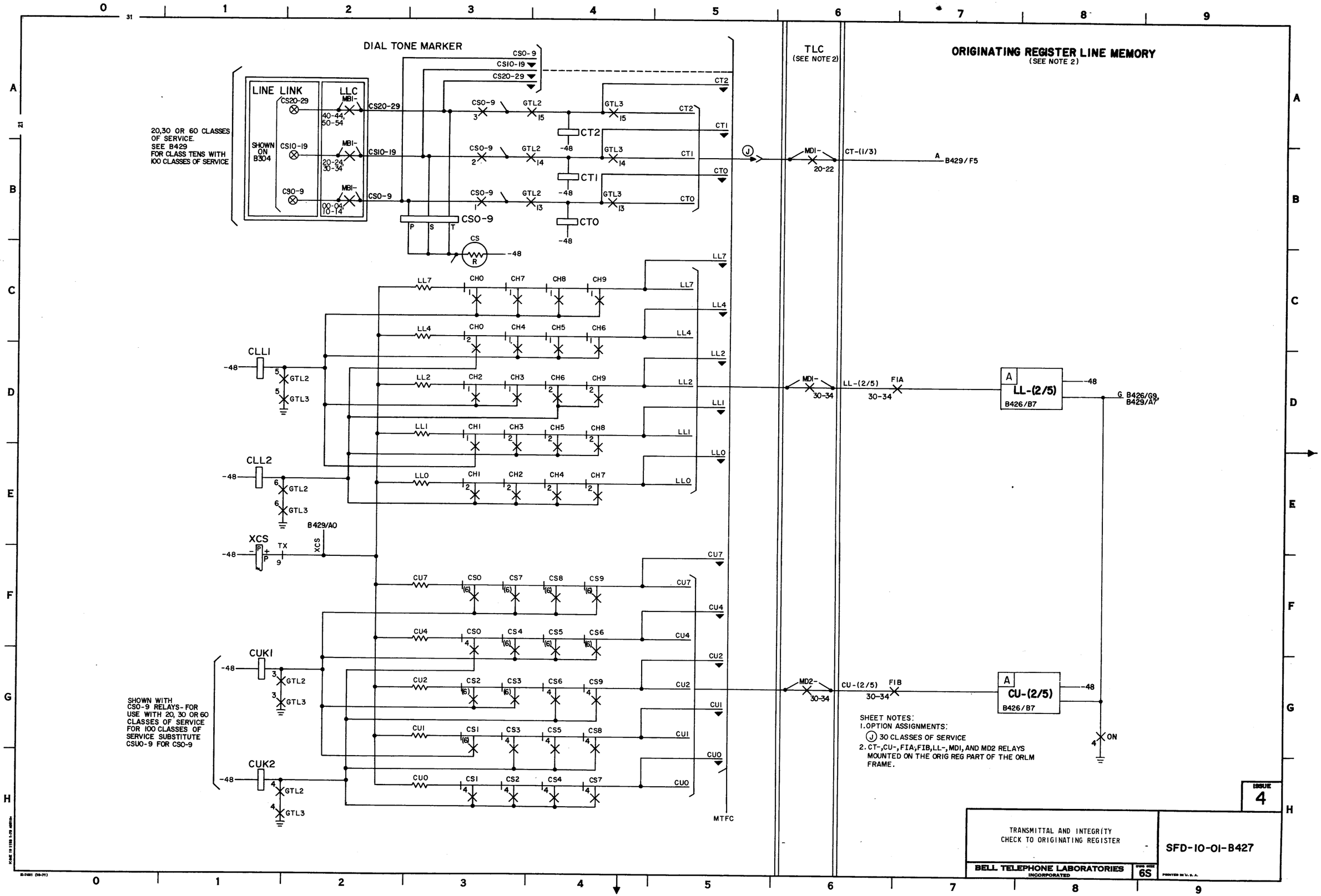

SFD-10-01-B427

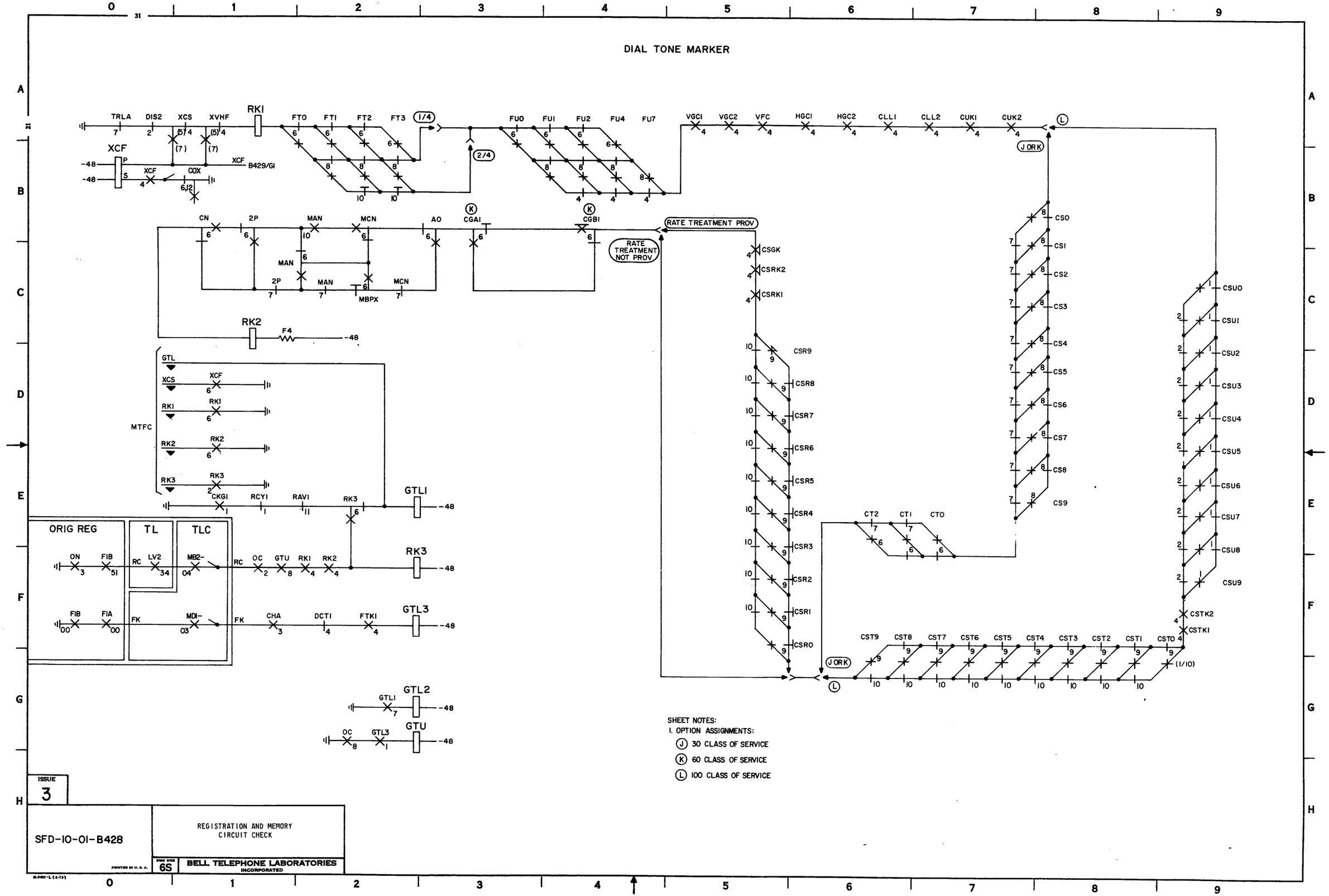
DIAL TONE MARKER
TRLA
DIS2
XCS
XVHF
RKI
XCF
-48
XCF
COX
B429/GI
FTO
FTI
FT2
FT3
1/4
2/4
FU0
FU1
FU2
FU4
FU7
VGCI
VGC2
VFC
HGCI
HGC2
CLLI
CLL2
CUKI
CUK2
J ORK
CN
2P
MAN
MCN
AO
CGAI
CGBI
MBPX
RATE TREATMENT PROV
RATE TREATMENT NOT PROV
RK2
F4
GTL
MTFC
RK3
CKGI
RCYI
RAVI
GTLI
ORIG REG
TL
TLC
ON
FIB
LV2
MB2-
RC
OC
GTU
FIA
FK
MDI-
CHA
DCTI
FTKI
GTL3
GTL2
CSGK
CSRK2
CSRKI
CSR9
CSR8
CSR7
CSR6
CSR5
CSR4
CSR3
CSR2
CSR1
CSR0
CS0
CS1
CS2
CS3
CS4
CS5
CS6
CS7
CS8
CS9
CSU0
CSU1
CSU2
CSU3
CSU4
CSU5
CSU6
CSU7
CSU8
CSU9
CSTK2
CSTK1
CT2
CT1
CT0
CST9
CST8
CST7
CST6
CST5
CST4
CST3
CST2
CST1
CST0
1/10
SHEET NOTES:
1. OPTION ASSIGNMENTS:
J 30 CLASS OF SERVICE
K 60 CLASS OF SERVICE
L 100 CLASS OF SERVICE
ISSUE 3
SFD-10-01-B428
REGISTRATION AND MEMORY CIRCUIT CHECK
DWG SIZE 6S
BELL TELEPHONE LABORATORIES INCORPORATED
PRINTED IN U.S.A.
SFD-10-01-B428

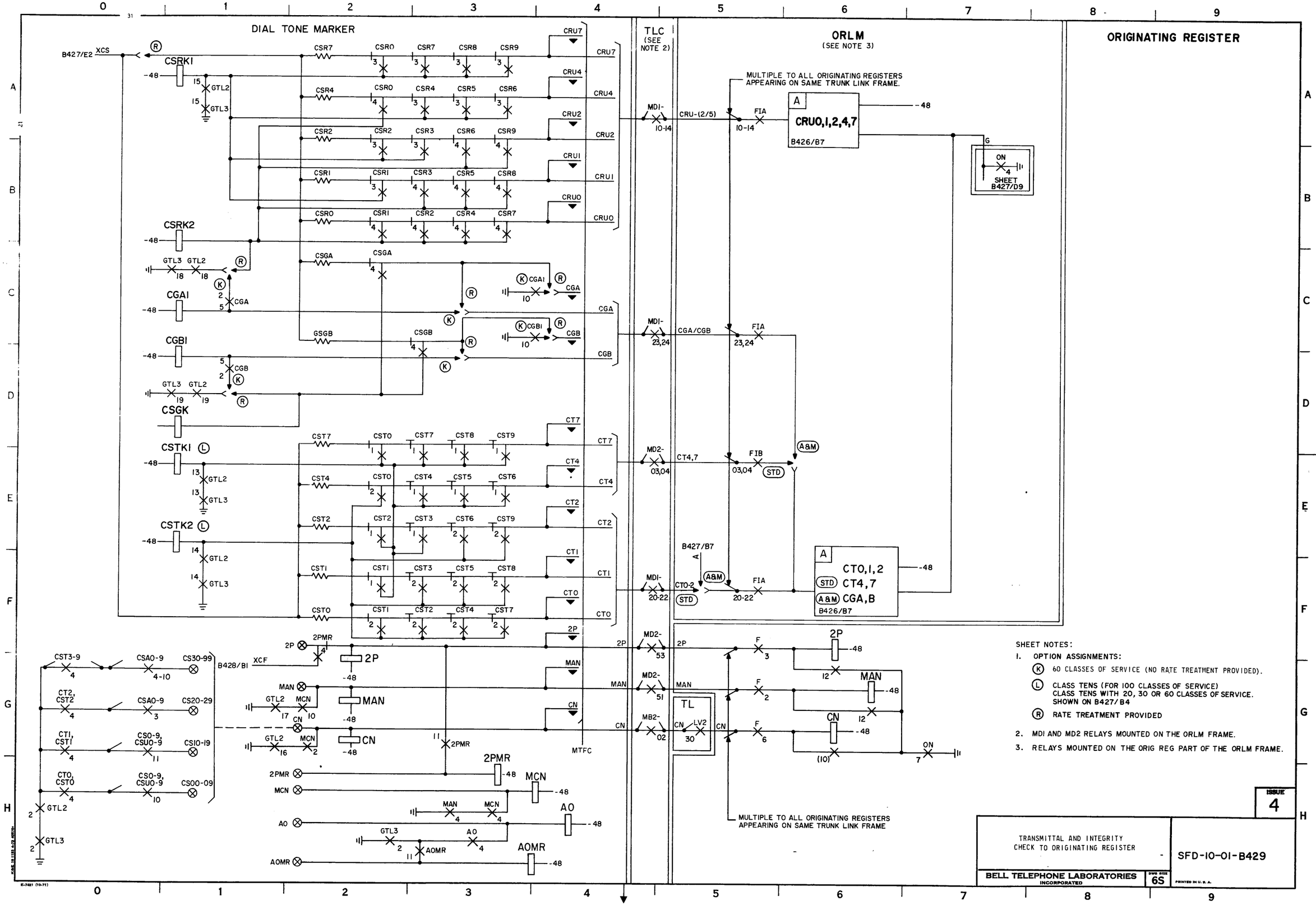

SHEET NOTES:

1. OPTION ASSIGNMENTS:
   - (K) 60 CLASSES OF SERVICE (NO RATE TREATMENT PROVIDED).
   - (L) CLASS TENS (FOR 100 CLASSES OF SERVICE) CLASS TENS WITH 20, 30 OR 60 CLASSES OF SERVICE. SHOWN ON B427/B4
   - (R) RATE TREATMENT PROVIDED
2. MDI AND MD2 RELAYS MOUNTED ON THE ORLM FRAME.
3. RELAYS MOUNTED ON THE ORIG REG PART OF THE ORLM FRAME.

ISSUE 4

TRANSMITTAL AND INTEGRITY CHECK TO ORIGINATING REGISTER

BELL TELEPHONE LABORATORIES INCORPORATED

DWG SIZE 6S

SFD-10-01-B429

PRINTED IN U.S.A.

SFD-10-01-B429

AUTOMATIC MONITOR

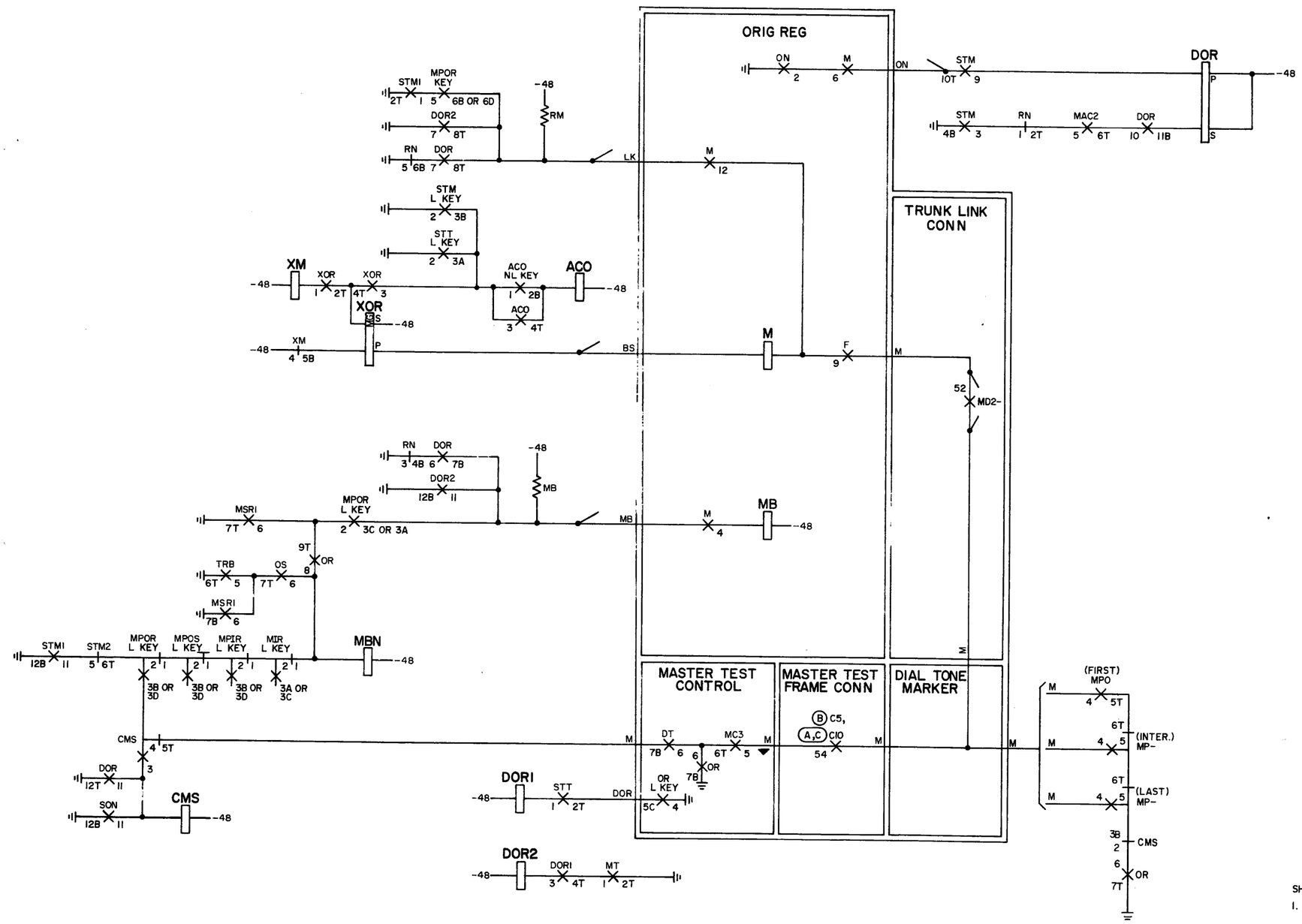

SHEET NOTES:

1. OPTION ASSIGNMENTS:
   - (A) 2/X TROUBLE CARD
   - (B) 1/X TROUBLE CARD SINGLE SIDED
   - (C) 1/X TROUBLE CARD DOUBLE SIDED

ISSUE 3

SFD-10-01-B430

TEST AND MONITOR INDICATIONS TO ORIGINATING REGISTER

SHEET NUMBER 6S

BELL TELEPHONE LABORATORIES INCORPORATED

PRINTED IN U.S.A.

SFD-10-01-B430

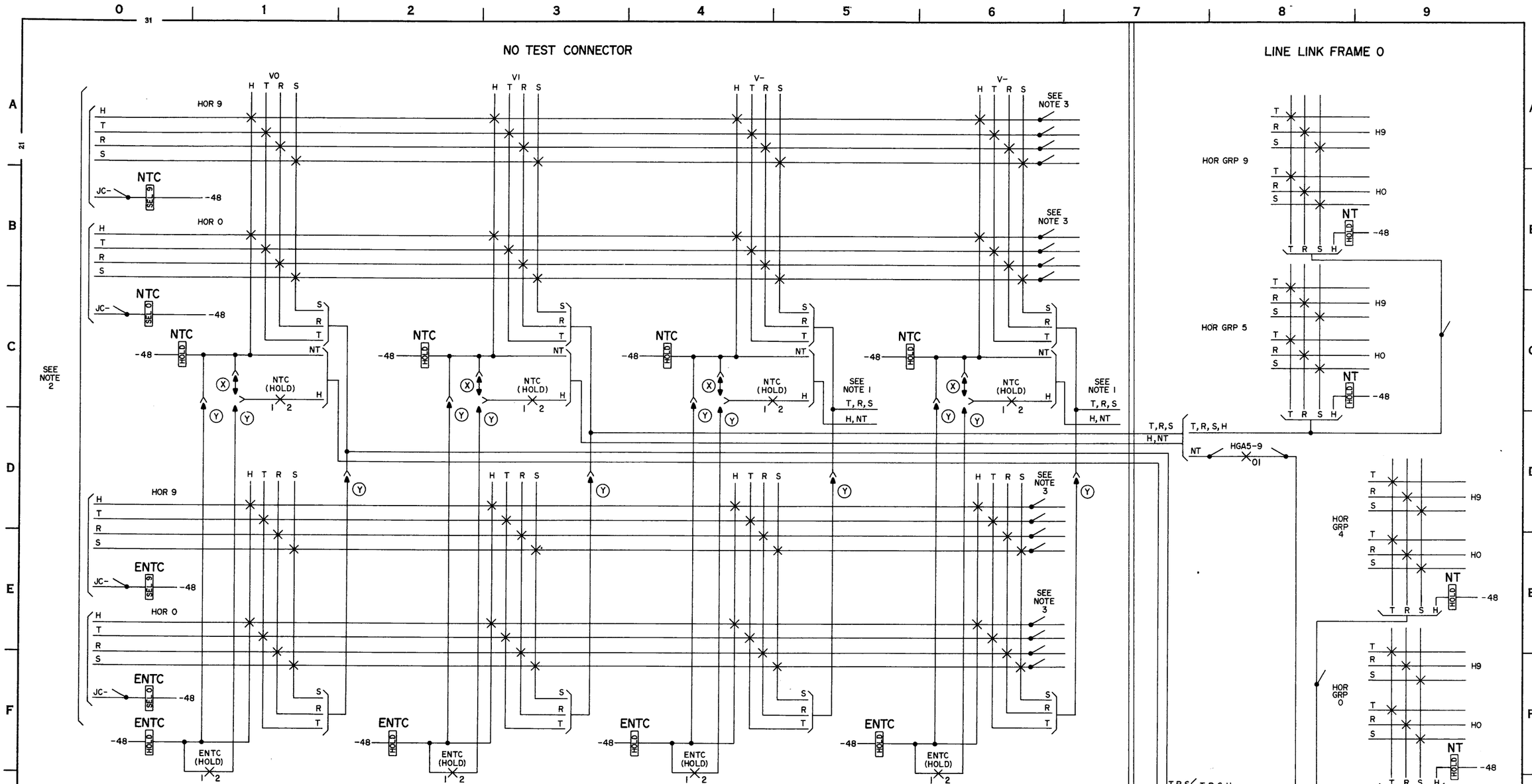

SHEET NOTES:

1. DISTRIBUTION OF (NTC) SWITCH VERTICALS TO LINE LINK FRAME. HORIZONTAL LINE GROUP NO TEST VERTICALS.

VERTICAL	NTC SWITCH 1ST	2ND	3RD	4TH	5TH	6TH	7TH	8TH	9TH	10TH	11TH	12TH	LINE LINK NO TEST VERTICAL HORIZONTAL LINE GROUP
	LINE LINK FRAME												
00	00	05	10	15	20	25	30	35	40	45	50	55	0-4
01													5-9
02	01	06	11	16	21	26	31	36	41	46	51	56	0-4
03													5-9
04	02	07	12	17	22	27	32	37	42	47	52	57	0-4
05													5-9
06	03	08	13	18	23	28	33	38	43	48	53	58	0-4
07													5-9
08	04	09	14	19	24	29	34	39	44	49	54	59	0-4
09													5-9

WHERE MORE THAN FORTY LINE LINK FRAMES ARE REQUIRED, THE JC- LEADS SHALL BE ASSIGNED AND MULTIPLED TO OTHER SWITCHES AS FOLLOWS:

FROM JC LEAD NO.	TO SWITCH ASSOC WITH LL FRAMES	TO SWITCH ASSOC WITH LL FRAMES
0	00-04	—
1	05-09	—
2	10-14	—
3	15-19	—
4	20-24	40-44
5	25-29	45-49
6	30-34	50-54
7	35-39	55-59

2. ASSIGN LEVELS AS REQUIRED TO:
   DSA BD - NO TEST TRUNKS
   LTD - NO TEST TRUNKS
   MASTER TEST CONTROL
   LIT
   ETC.
3. MULTIPLE TO CORRESPONDING LEVELS OF OTHER NO TEST SWITCHES.
   (X) 10 OR LESS NT TRUNK APPEARANCES REQUIRED.
   (Y) MORE THAN 10 NT TRUNK APPEARANCES REQUIRED.

ISSUE 3

NO TEST CONNECTOR

SFD-10-01-B431

BELL TELEPHONE LABORATORIES INCORPORATED

DWG SIZE 6S

PRINTED IN U.S.A.

SFD-10-01-B431

ESTABLISHING DIALING CONNECTION

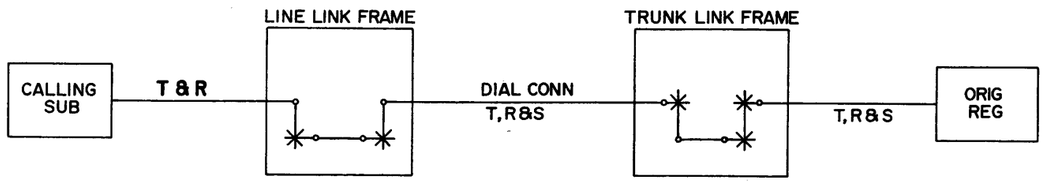

INDEX

CAUTION!

DUE TO THE SIMPLIFIED NATURE OF THIS DOCUMENT, INFORMATION SHOWN MAY NOT BE COMPLETE.

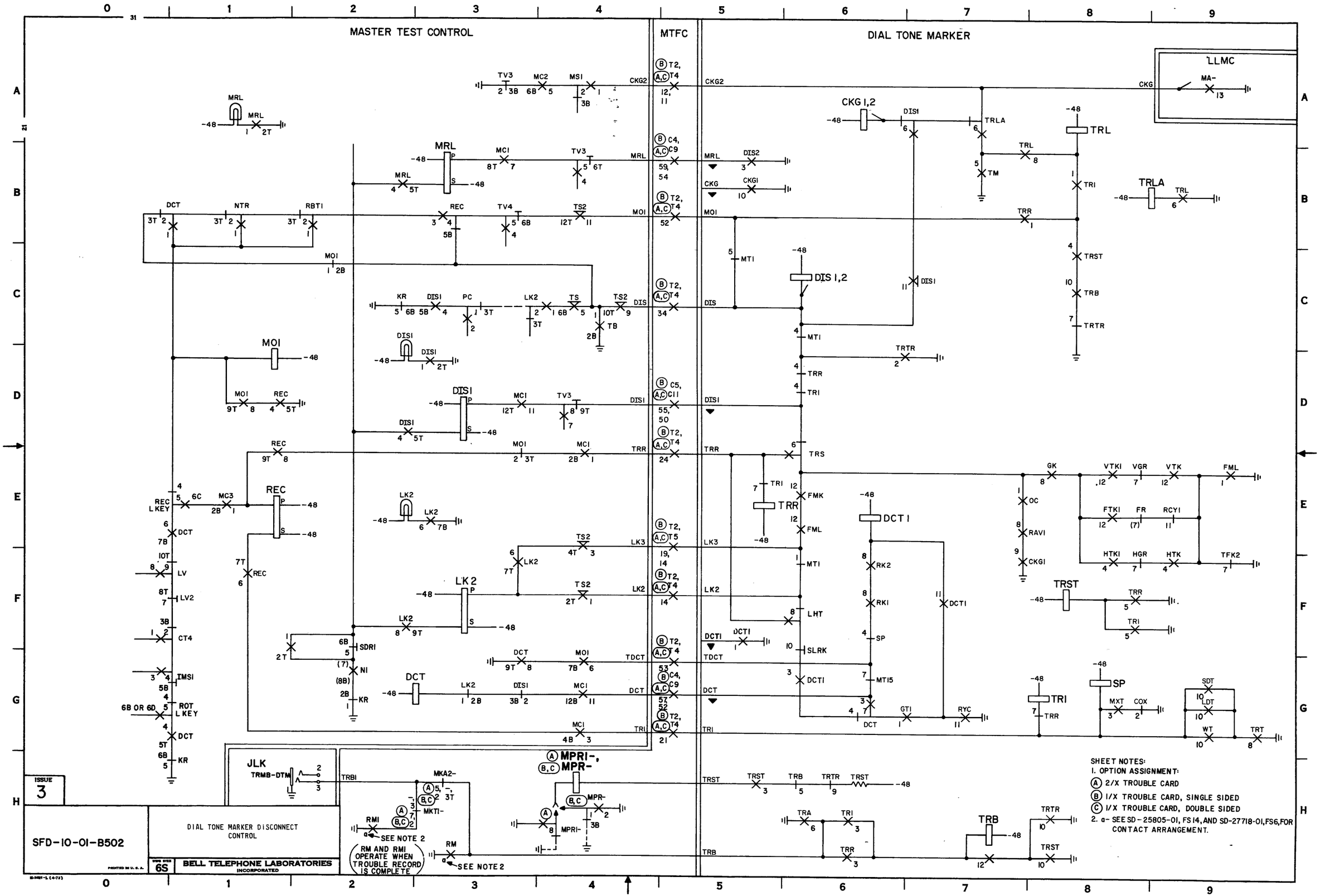

SFD-10-01-B502

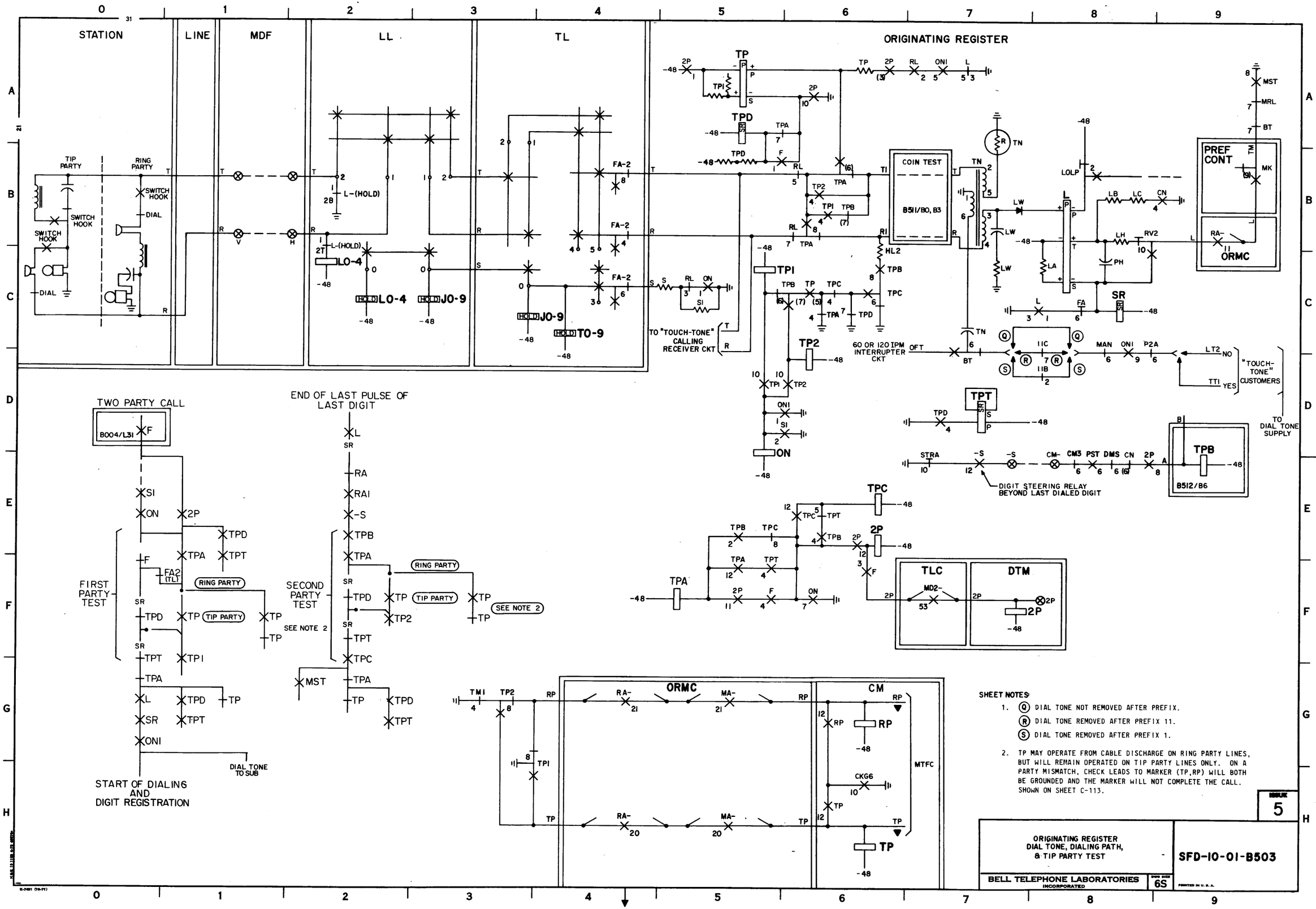

SHEET NOTES

1. (Q) DIAL TONE NOT REMOVED AFTER PREFIX.
   (R) DIAL TONE REMOVED AFTER PREFIX 11.
   (S) DIAL TONE REMOVED AFTER PREFIX 1.

2. TP MAY OPERATE FROM CABLE DISCHARGE ON RING PARTY LINES, BUT WILL REMAIN OPERATED ON TIP PARTY LINES ONLY. ON A PARTY MISMATCH, CHECK LEADS TO MARKER (TP,RP) WILL BOTH BE GROUNDED AND THE MARKER WILL NOT COMPLETE THE CALL. SHOWN ON SHEET C-113.

ISSUE 5

ORIGINATING REGISTER
DIAL TONE, DIALING PATH,
& TIP PARTY TEST

SFD-10-01-B503

BELL TELEPHONE LABORATORIES
INCORPORATED

SIZE 6S

PRINTED IN U.S.A.

SFD-10-01-B503

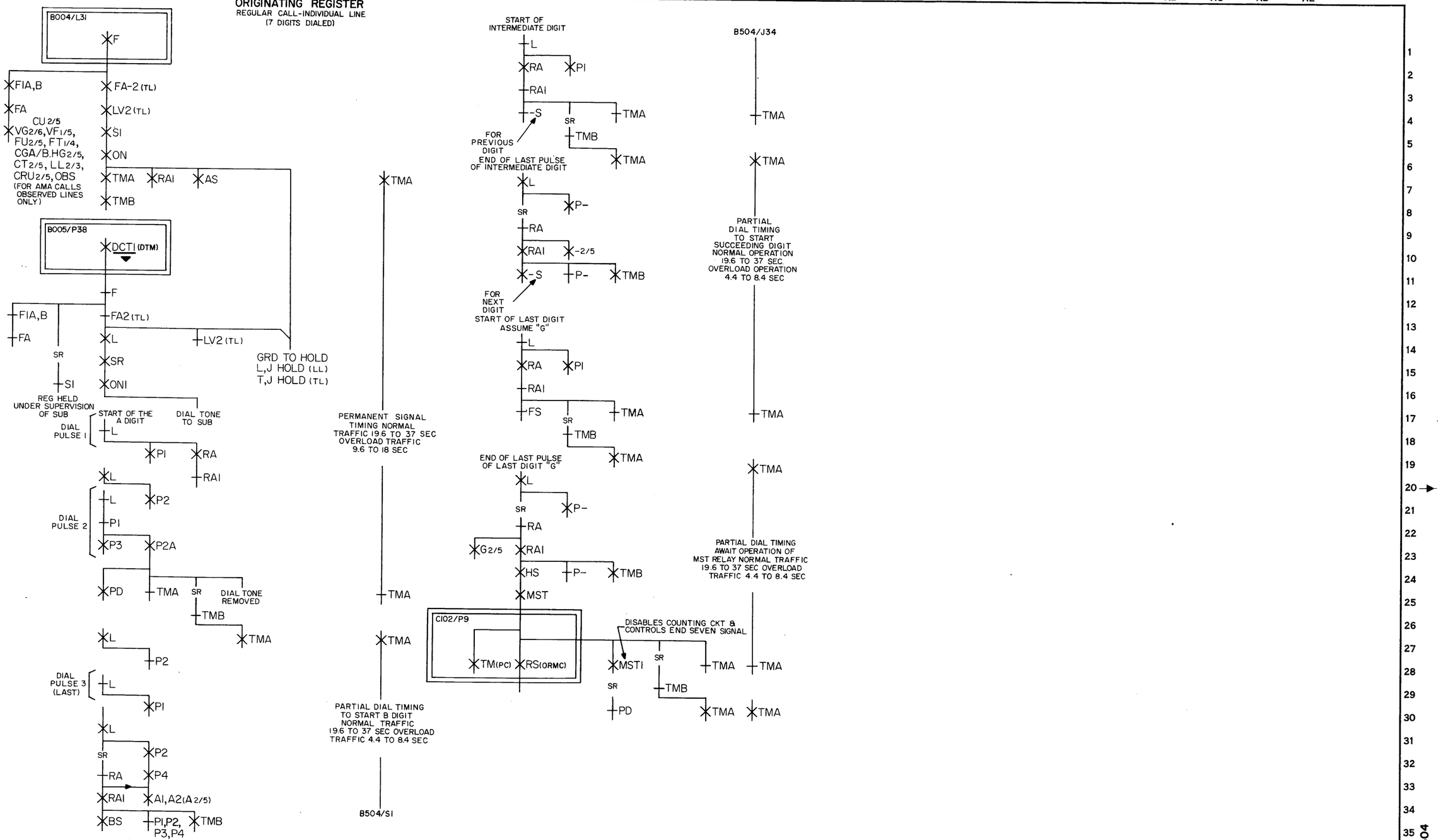

ISSUE 3

SFD-10-01-B504

ORIGINATING REGISTER SEQUENCE CHART
REGULAR CALL-INDIVIDUAL LINE
(7 DIGITS DIALED)

DWG SIZE 6S

BELL TELEPHONE LABORATORIES INCORPORATED

E-7421-B (10-71)

SFD-10-01-B504

ORIGINATING REGISTER

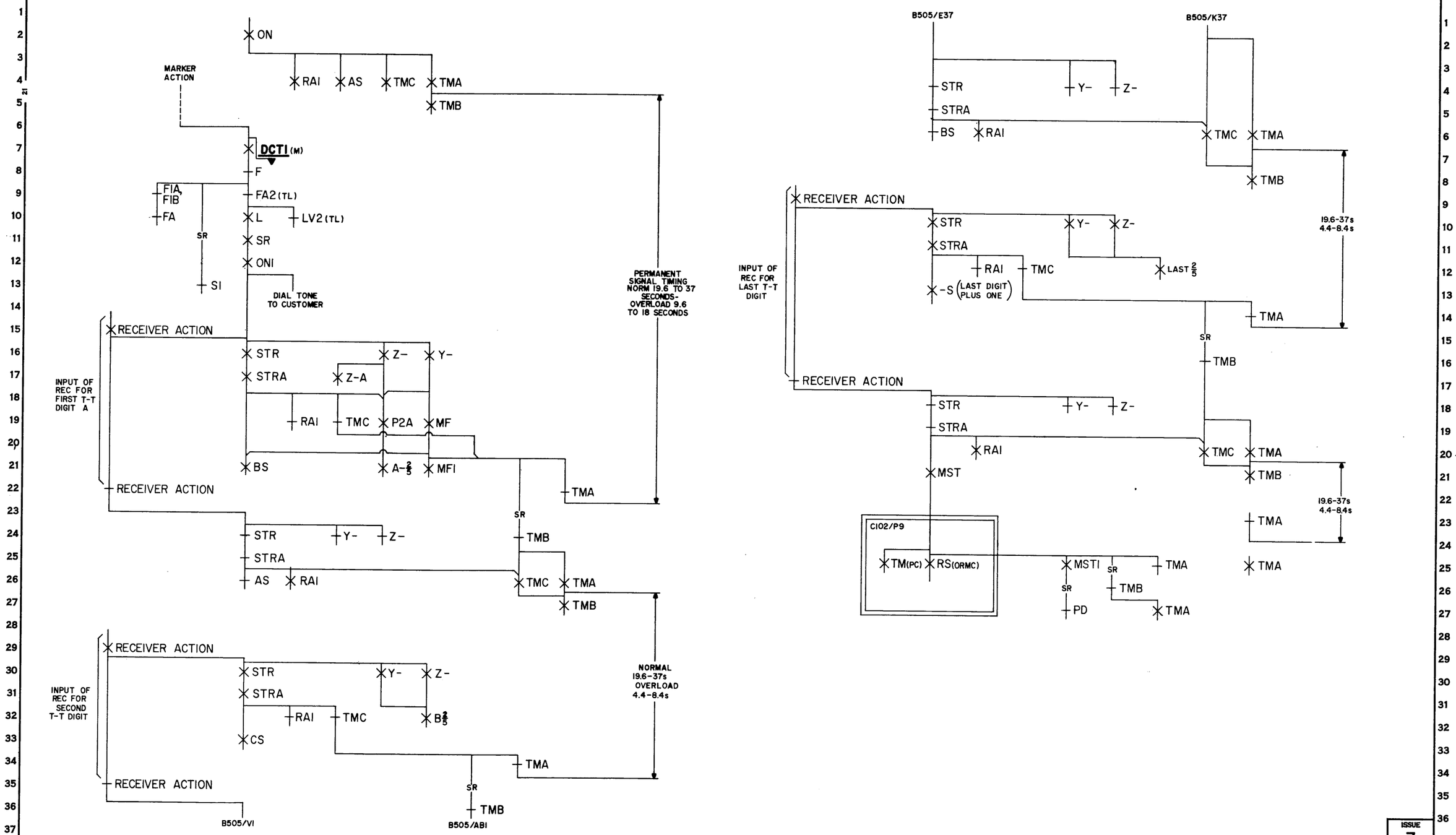

ISSUE 3

ORIGINATING REGISTER SEQUENCE CHART "TOUCH-TONE" PULSING

SFD-10-01-B505

BELL TELEPHONE LABORATORIES INCORPORATED

DWG SIZE 6S

PRINTED IN U.S.A.

E-7481-B (10-71)

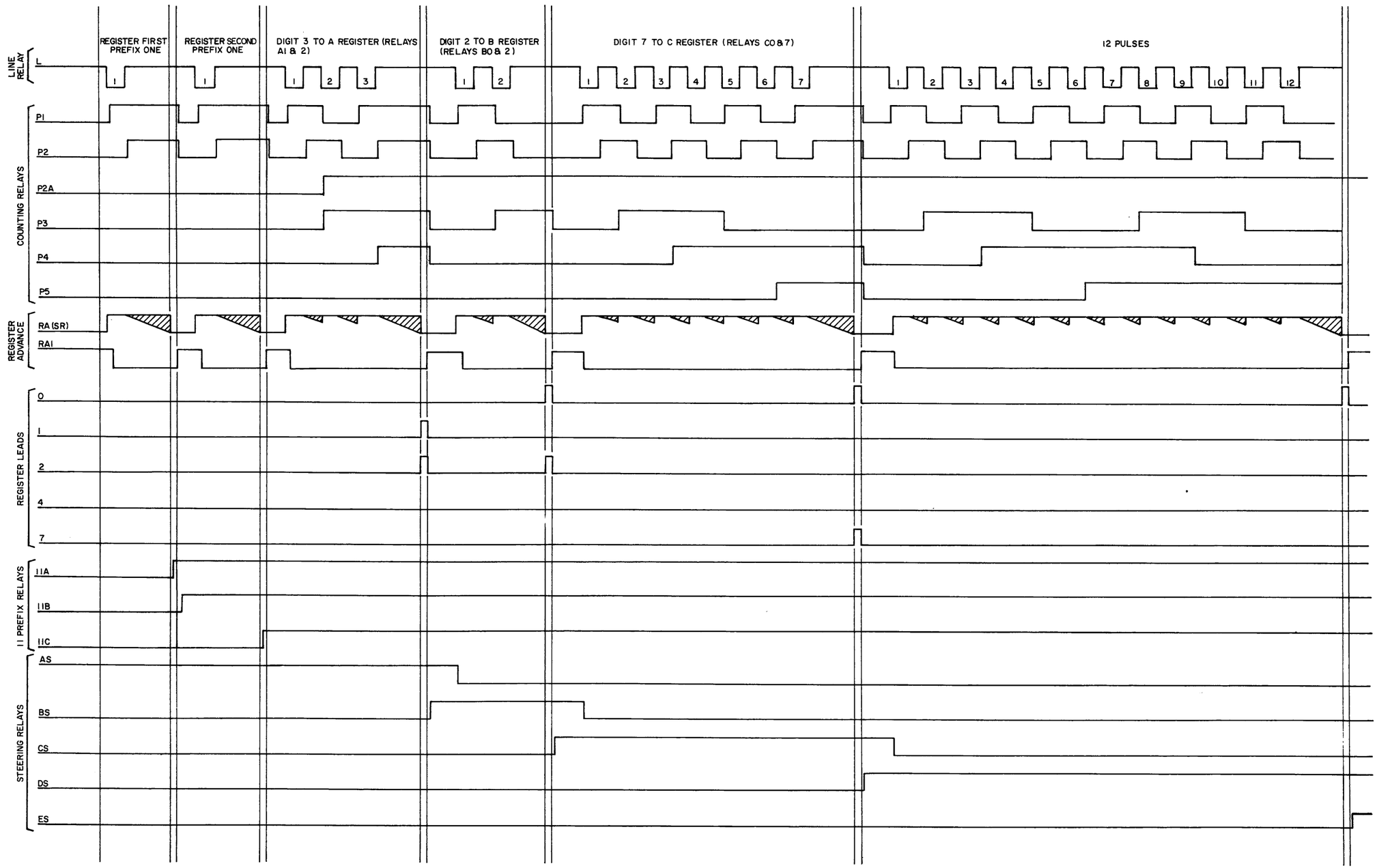

NOTES:

1. UPPER POSITION OF CHART LINES INDICATE RELAY OPERATED. LOWER POSITION INDICATES RELAY RELEASED. SHADED PORTIONS INDICATE TIME TO RELEASE SLOW RELEASE RELAY RA. REGISTER LEADS ARE GROUNDED BETWEEN THE RELEASE OF THE RA AND OPERATE OF THE RA1.

ISSUE 3

SFD-10-01-B506

DIALING AND DIGIT REGISTRATION

DWG SIZE 6S

BELL TELEPHONE LABORATORIES INCORPORATED

PRINTED IN U. S. A.

SFD-10-01-B506

ORIGINATING REGISTER

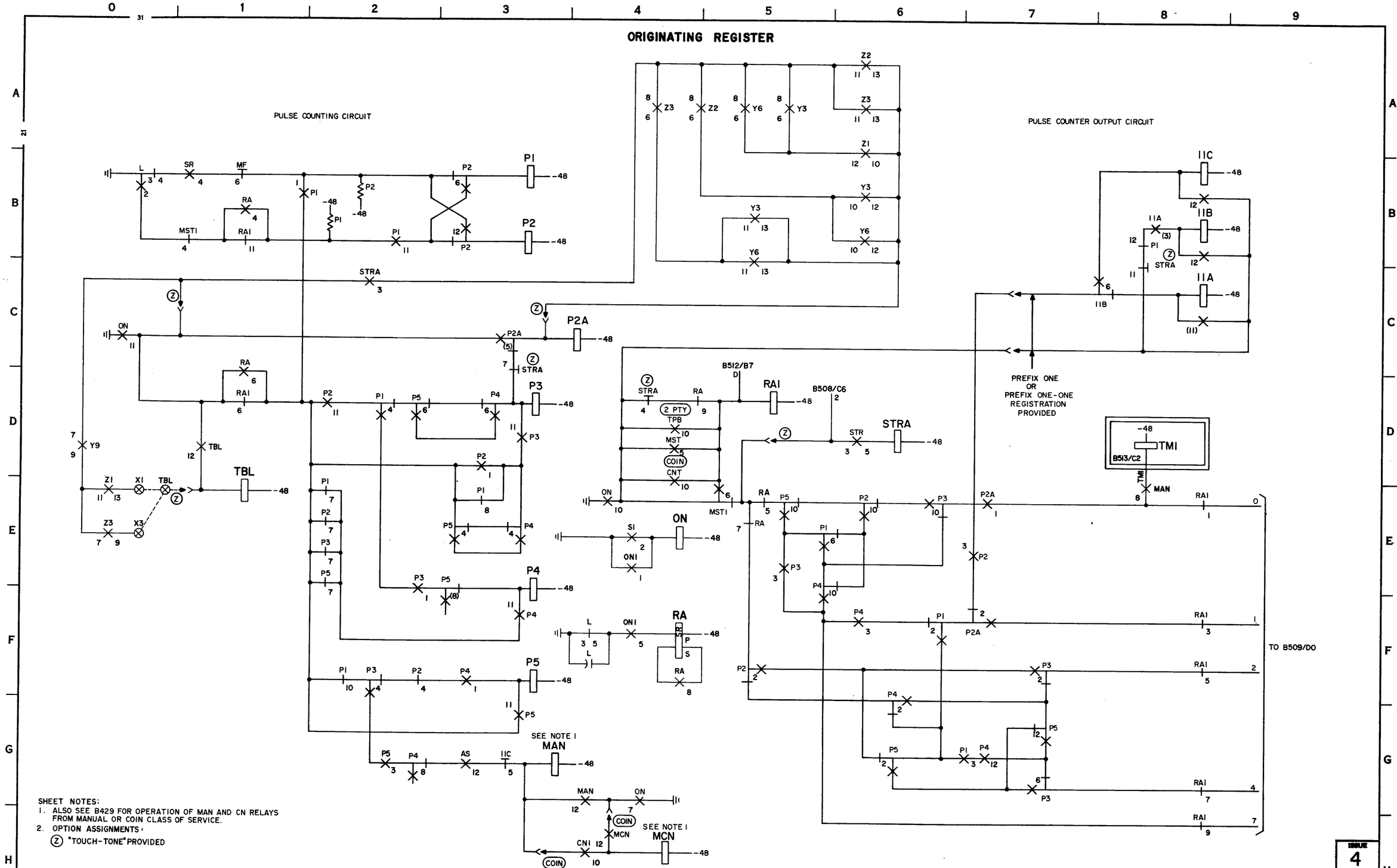

ISSUE 4

DIALING & PULSE COUNTING

BELL TELEPHONE LABORATORIES INCORPORATED

6S

SFD-10-01-B507

PRINTED IN U.S.A.

SFD-10-01-B507

ORIGINATING REGISTER

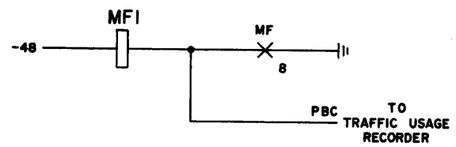

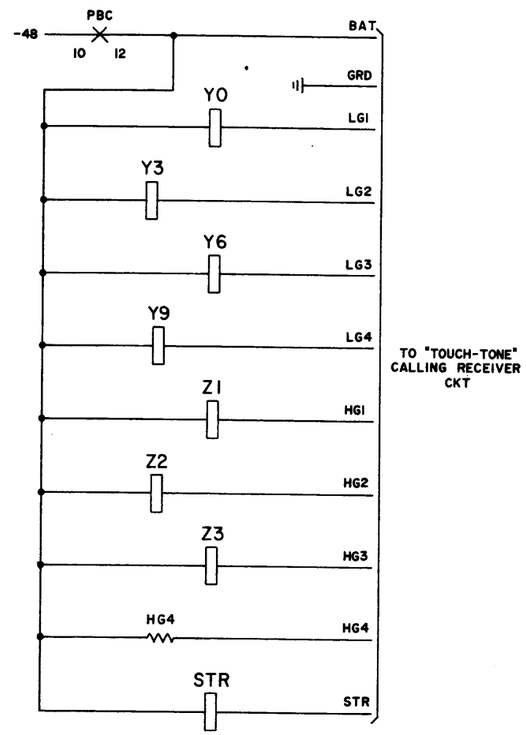

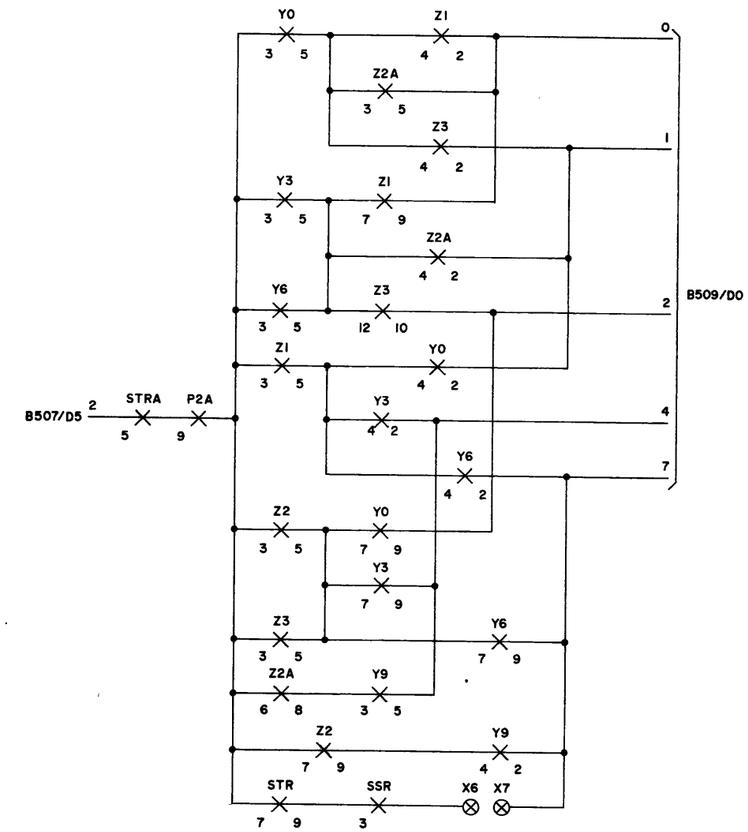

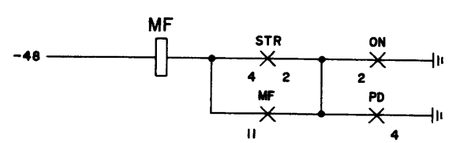

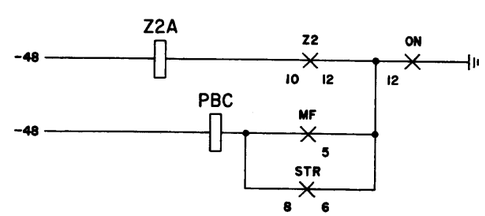

ISSUE 3

SFD-10-01-B508

"TOUCH-TONE" CONTROL

6S

BELL TELEPHONE LABORATORIES
INCORPORATED

ORGINATING REGISTER

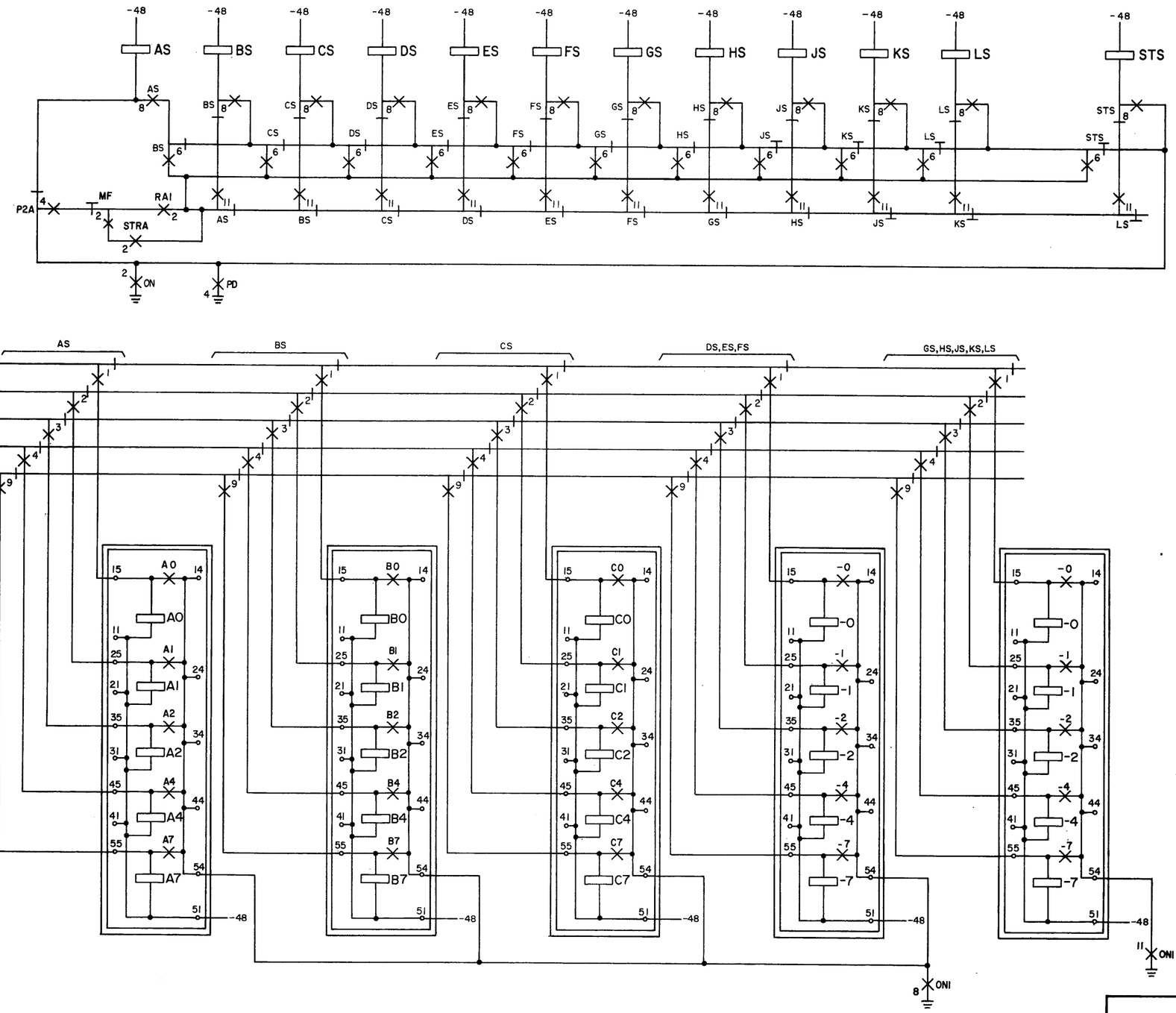

ISSUE 4

DIGIT STEERING AND REGISTRATION

SFD-10-01-B509

BELL TELEPHONE LABORATORIES INCORPORATED

DWG SIZE 6S

PRINTED IN U.S.A.

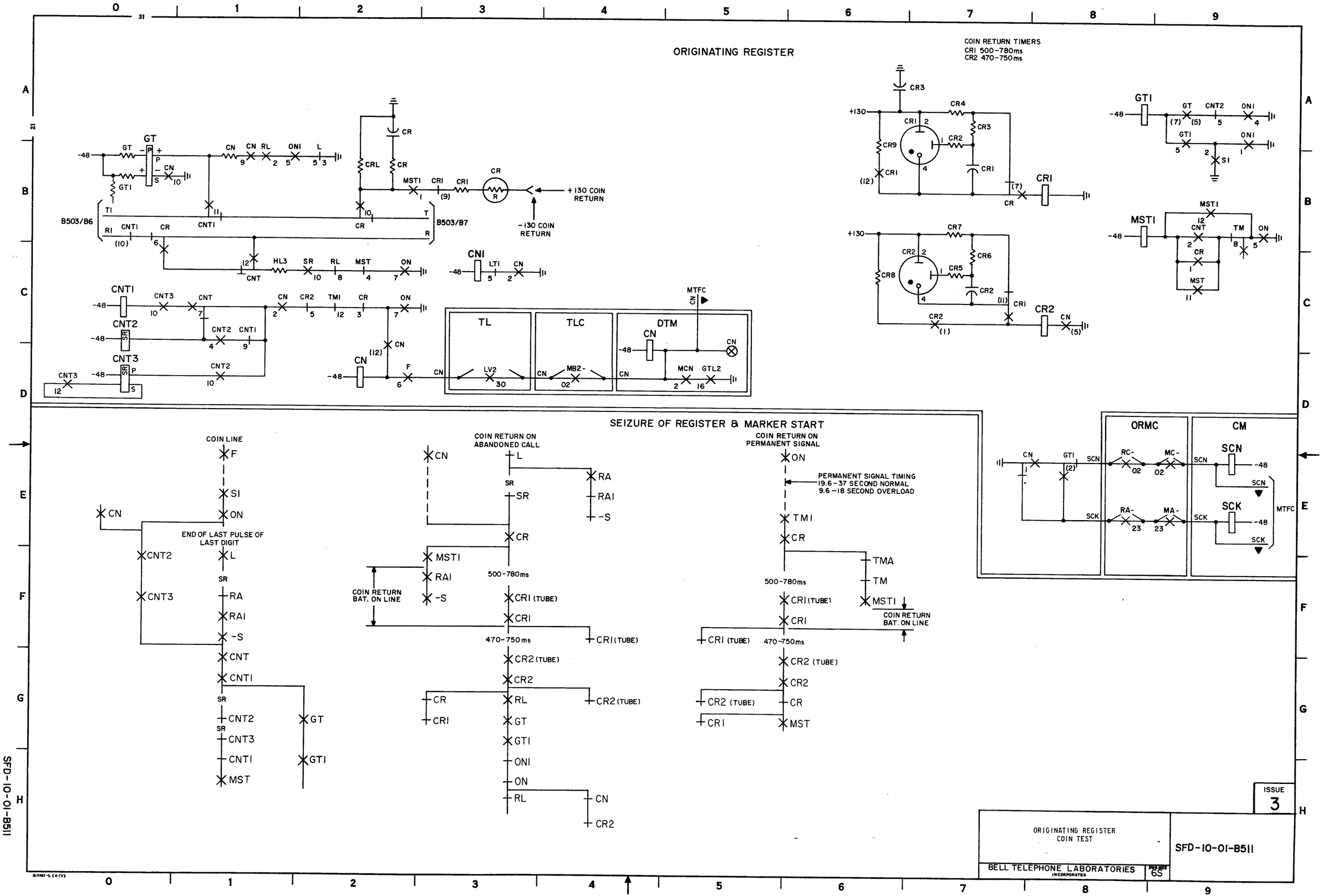
ORIGINATING REGISTER
COIN RETURN TIMERS
CR1 500-780ms
CR2 470-750ms
+130 COIN RETURN
-130 COIN RETURN
B503/B6
B503/B7
TL
TLC
DTM
MTFC
SEIZURE OF REGISTER & MARKER START
COIN LINE
END OF LAST PULSE OF LAST DIGIT
COIN RETURN ON ABANDONED CALL
COIN RETURN BAT. ON LINE
COIN RETURN ON PERMANENT SIGNAL
PERMANENT SIGNAL TIMING
19.6-37 SECOND NORMAL
9.6-18 SECOND OVERLOAD
500-780ms
470-750ms
ORMC
CM
SCN
SCK
MTFC
ISSUE 3
ORIGINATING REGISTER COIN TEST
BELL TELEPHONE LABORATORIES INCORPORATED
SFD-10-01-B511
SFD-10-01-B511

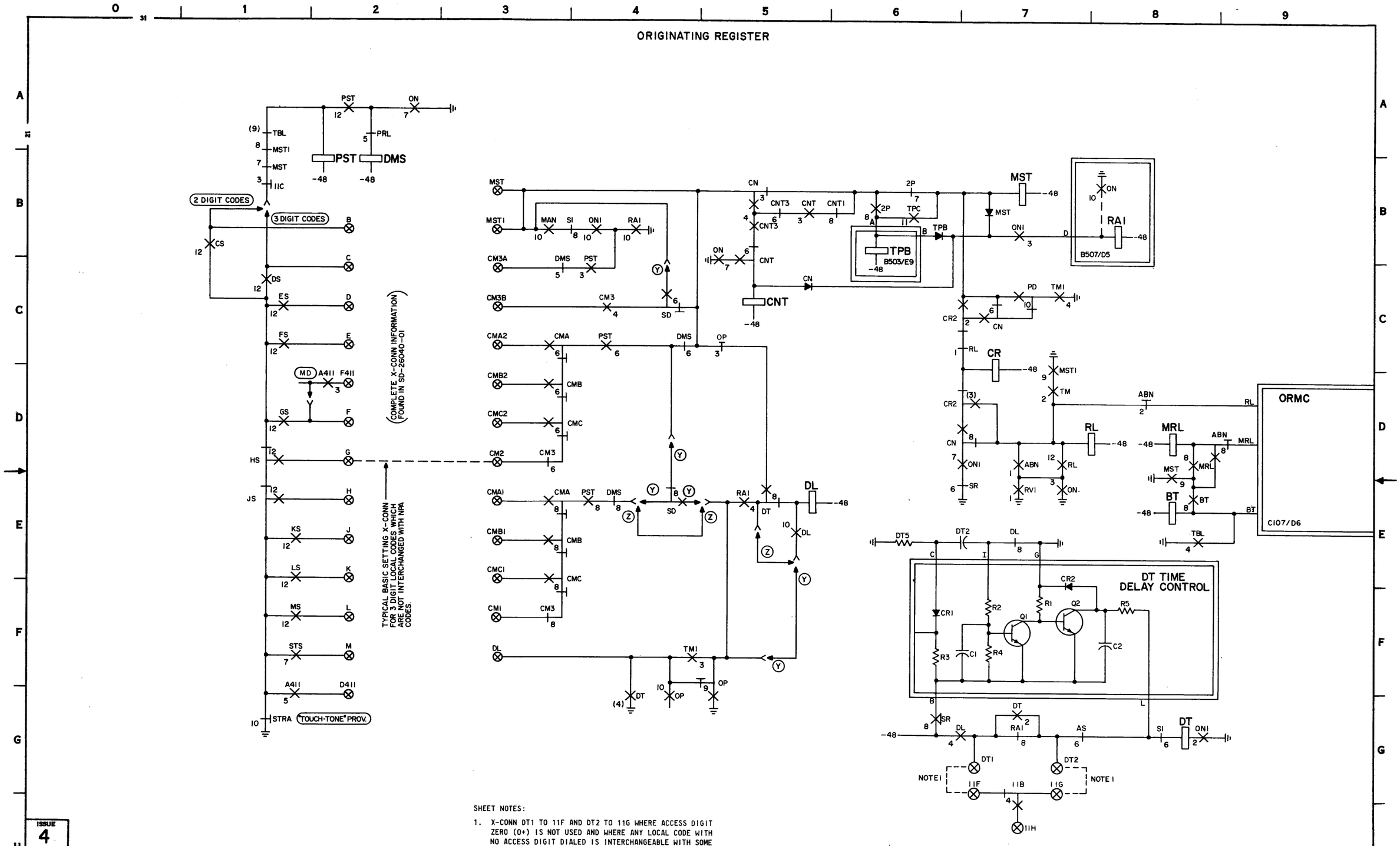

SHEET NOTES:

1. X-CONN DT1 TO 11F AND DT2 TO 11G WHERE ACCESS DIGIT ZERO (0+) IS NOT USED AND WHERE ANY LOCAL CODE WITH NO ACCESS DIGIT DIALED IS INTERCHANGEABLE WITH SOME NPA CODES.
2. OPTION ASSIGNMENTS:
   - (Y) (A & M) STATIONS PROVIDED (NOT PROVIDED WHERE LOCAL CODES AND NPA CODES ARE INTERCHANGEABLE)
   - (Z) (STD) STATIONS NOT PROVIDED

ISSUE 4

SFD-10-01-B512

ORIGINATING REGISTER
MARKER START CONTROL
PRETRANSLATOR START

BELL TELEPHONE LABORATORIES INCORPORATED

6S

SFD-10-01-B512

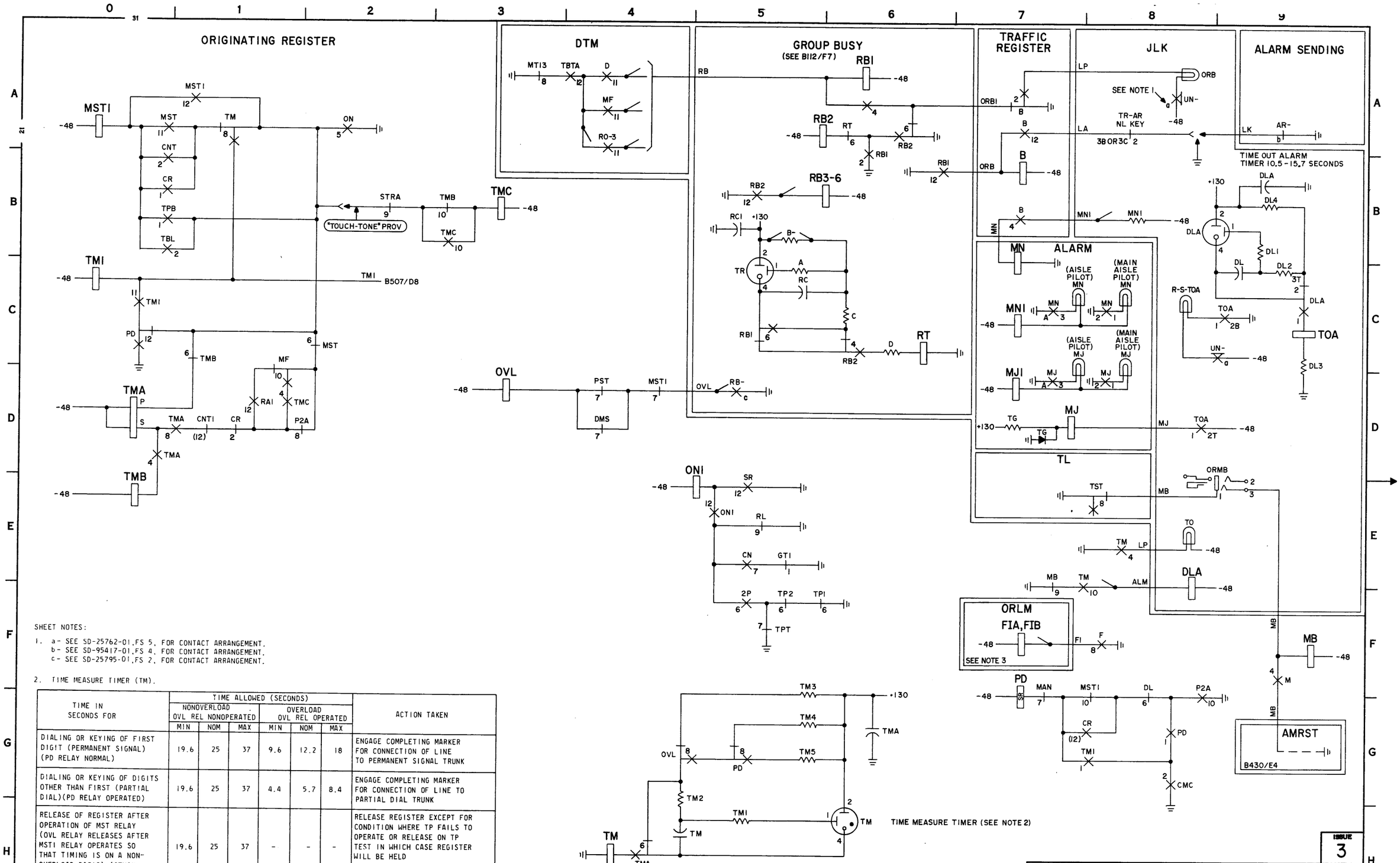

SHEET NOTES:

1. a- SEE SD-25762-01,FS 5, FOR CONTACT ARRANGEMENT.
   b- SEE SD-95417-01,FS 4, FOR CONTACT ARRANGEMENT.
   c- SEE SD-25795-01,FS 2, FOR CONTACT ARRANGEMENT.

2. TIME MEASURE TIMER (TM).

TIME IN SECONDS FOR	TIME ALLOWED (SECONDS) NONOVERLOAD OVL REL NONOPERATED MIN	NOM	MAX	OVERLOAD OVL REL OPERATED MIN	NOM	MAX	ACTION TAKEN
DIALING OR KEYING OF FIRST DIGIT (PERMANENT SIGNAL) (PD RELAY NORMAL)	19.6	25	37	9.6	12.2	18	ENGAGE COMPLETING MARKER FOR CONNECTION OF LINE TO PERMANENT SIGNAL TRUNK
DIALING OR KEYING OF DIGITS OTHER THAN FIRST (PARTIAL DIAL)(PD RELAY OPERATED)	19.6	25	37	4.4	5.7	8.4	ENGAGE COMPLETING MARKER FOR CONNECTION OF LINE TO PARTIAL DIAL TRUNK
RELEASE OF REGISTER AFTER OPERATION OF MST RELAY (OVL RELAY RELEASES AFTER MSTI RELAY OPERATES SO THAT TIMING IS ON A NON-OVERLOAD BASIS) (STUCK REGISTER)	19.6	25	37	-	-	-	RELEASE REGISTER EXCEPT FOR CONDITION WHERE TP FAILS TO OPERATE OR RELEASE ON TP TEST IN WHICH CASE REGISTER WILL BE HELD

3. FIA AND FIB RELAYS MOUNTED ON ORIG REG PART OF THE ORLM FRAME.

ORIGINATING REGISTER
TIMING, ALARMS, AND MISC

BELL TELEPHONE LABORATORIES INCORPORATED

DWG SIZE 6S

SFD-10-01-B513

ISSUE 3

PRINTED IN U.S.A.

SFD-10-01-B513

ESTABLISHING DIAL CONNECTION

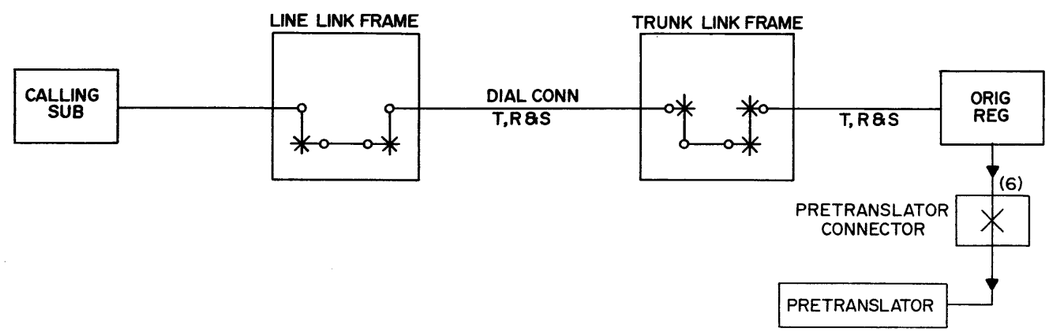

INDEX

CAUTION!

DUE TO THE SIMPLIFIED NATURE OF THIS DOCUMENT, INFORMATION SHOWN MAY NOT BE COMPLETE.

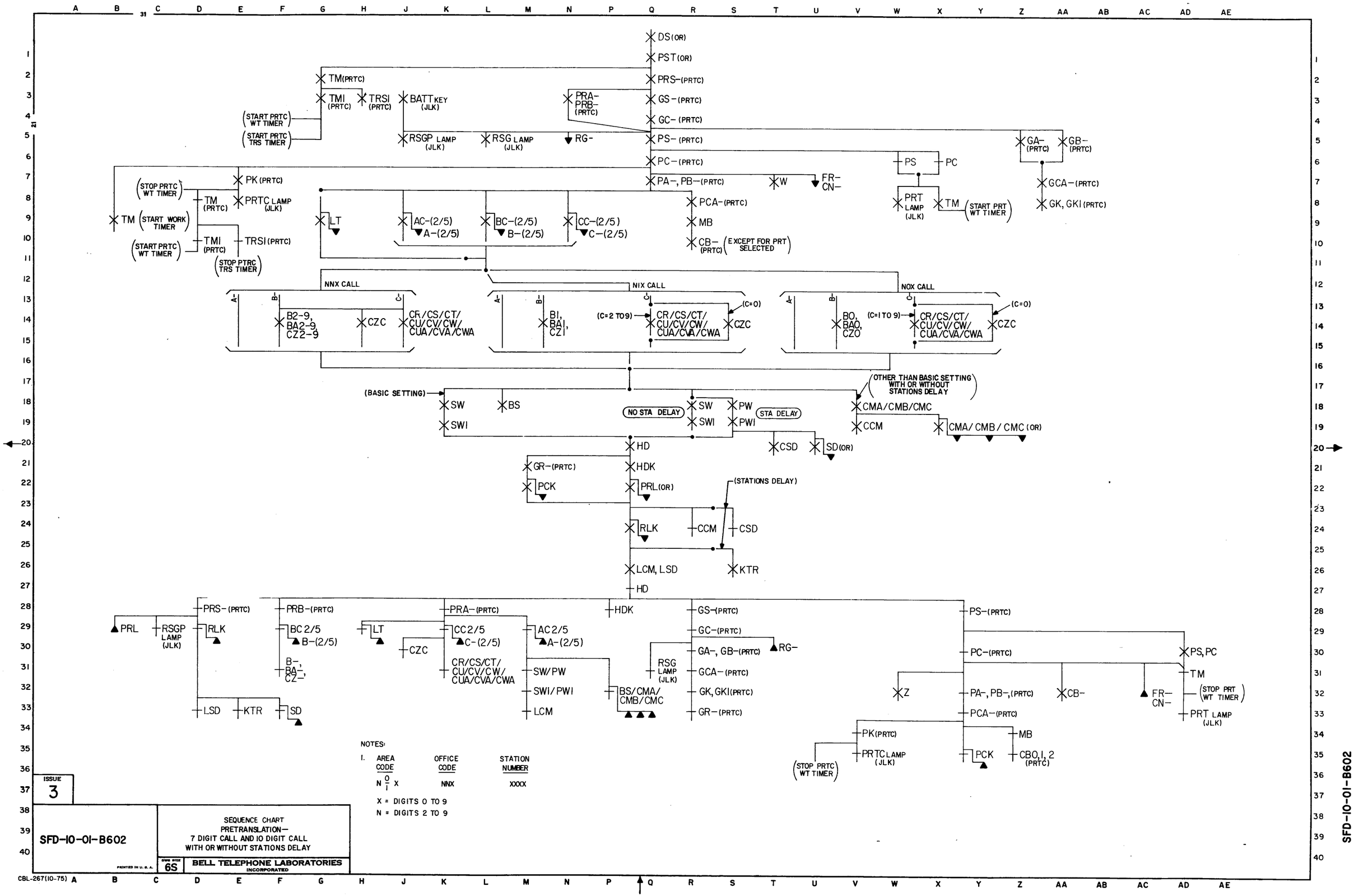
DS (OR)
PST (OR)
PRS- (PRTC)
GS- (PRTC)
GC- (PRTC)
PS- (PRTC)
PC- (PRTC)
PA-, PB- (PRTC)
TM (PRTC)
TMI (PRTC)
TRSI (PRTC)
BATT KEY (JLK)
PRA- PRB- (PRTC)
START PRTC WT TIMER
START PRTC TRS TIMER
RSGP LAMP (JLK)
RSG LAMP (JLK)
RG-
GA- (PRTC)
GB- (PRTC)
GCA- (PRTC)
GK, GKI (PRTC)
PS
PC
PRT LAMP (JLK)
TM (START PRT WT TIMER)
W
FR- CN-
PK (PRTC)
PRTC LAMP (JLK)
STOP PRTC WT TIMER
TM (START WORK TIMER)
STOP PTRC TRS TIMER
LT
AC-(2/5)
A-(2/5)
BC-(2/5)
B-(2/5)
CC-(2/5)
C-(2/5)
PCA- (PRTC)
MB
CB- (PRTC) (EXCEPT FOR PRT SELECTED)
NNX CALL
NIX CALL
NOX CALL
B2-9, BA2-9, CZ2-9
CZC
CR/CS/CT/ CU/CV/CW/ CUA/CVA/CWA
BI, BAI, CZI
(C=2 TO 9)
(C=0)
BO, BAO, CZO
(C=1 TO 9)
(BASIC SETTING)
SW
SWI
BS
NO STA DELAY
PW
PWI
STA DELAY
(OTHER THAN BASIC SETTING WITH OR WITHOUT STATIONS DELAY)
CMA/CMB/CMC
CCM
CMA/ CMB / CMC (OR)
CSD
SD (OR)
HD
HDK
GR- (PRTC)
PCK
PRL (OR)
(STATIONS DELAY)
RLK
LCM, LSD
KTR
PRS- (PRTC)
PRL
RSGP LAMP (JLK)
LSD
SD
PRB- (PRTC)
BC 2/5
B-(2/5)
B-, BA-, CZ-,
PRA- (PRTC)
CC 2/5
C-(2/5)
AC 2/5
A-(2/5)
CR/CS/CT/ CU/CV/CW/ CUA/CVA/CWA
SW/PW
SWI/PWI
LCM
BS/CMA/ CMB/CMC
RSG LAMP (JLK)
GS- (PRTC)
GC- (PRTC)
GA-, GB- (PRTC)
GCA- (PRTC)
GK, GKI (PRTC)
GR- (PRTC)
PS- (PRTC)
PC- (PRTC)
PS, PC
TM
(STOP PRT WT TIMER)
PRT LAMP (JLK)
Z
PA-, PB-, (PRTC)
CB-
FR- CN-
PCA- (PRTC)
PK (PRTC)
PRTC LAMP (JLK)
(STOP PRTC WT TIMER)
MB
PCK
CBO, 1, 2 (PRTC)
NOTES:
1. AREA CODE N 0/1 X
OFFICE CODE NNX
STATION NUMBER XXXX
X = DIGITS 0 TO 9
N = DIGITS 2 TO 9
ISSUE 3
SFD-10-01-B602
SEQUENCE CHART
PRETRANSLATION—
7 DIGIT CALL AND 10 DIGIT CALL
WITH OR WITHOUT STATIONS DELAY
DWG SIZE 6S
BELL TELEPHONE LABORATORIES INCORPORATED
PRINTED IN U.S.A.
CBL-267(10-75)
SFD-10-01-B602

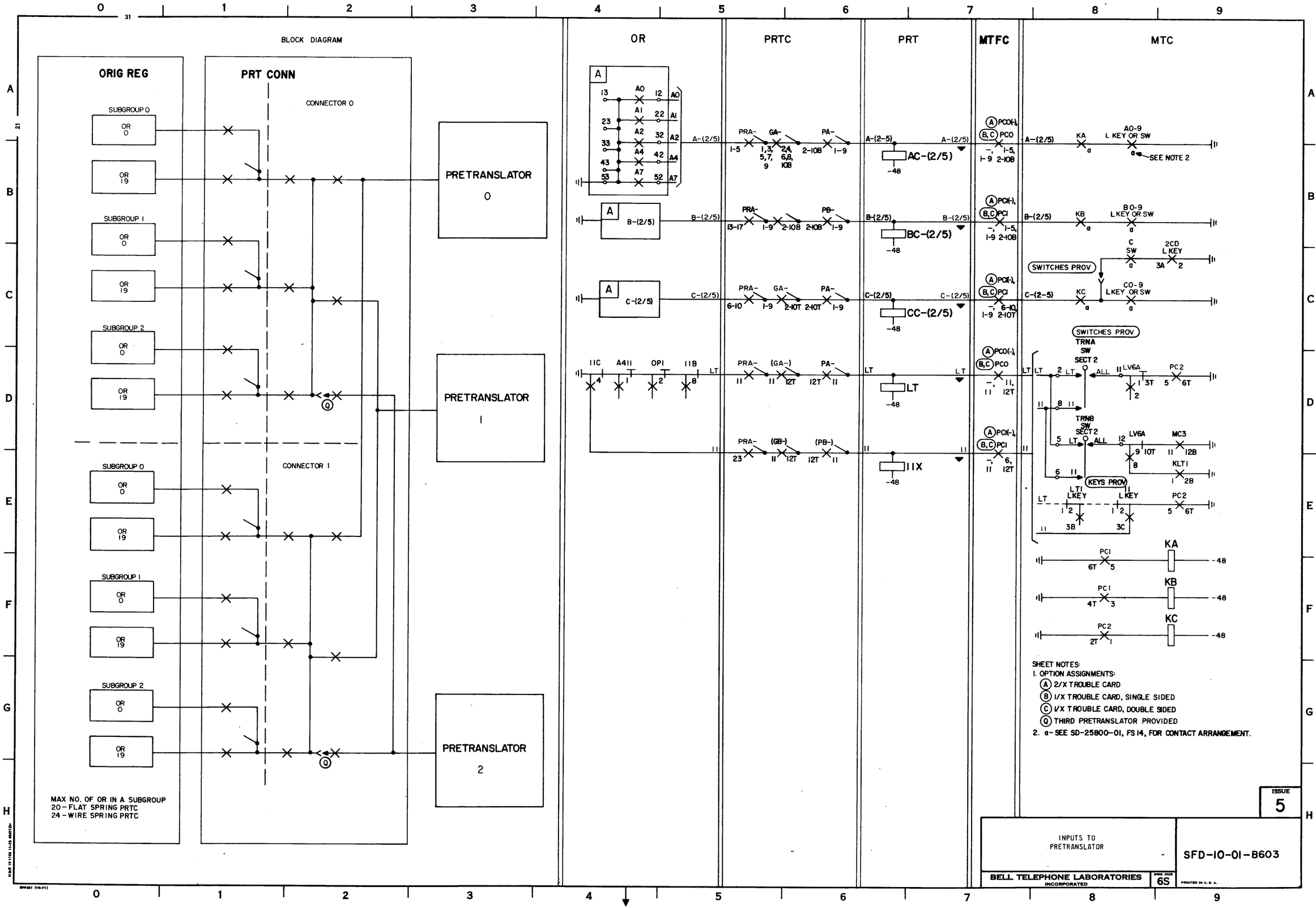

SFD-10-01-B603

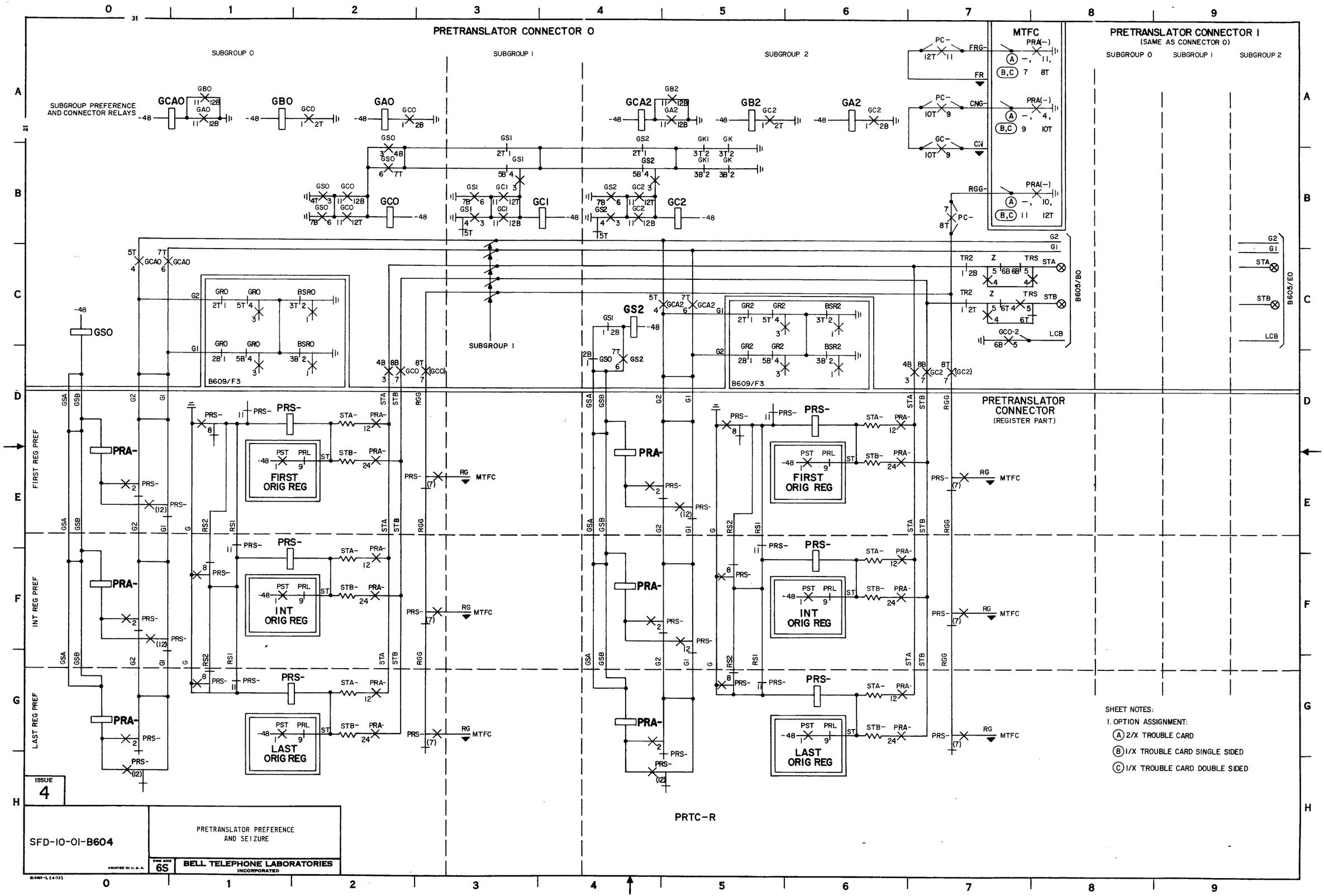
PRETRANSLATOR CONNECTOR O
SUBGROUP 0
SUBGROUP 1
SUBGROUP 2
SUBGROUP PREFERENCE AND CONNECTOR RELAYS
GCAO
GBO
GAO
GCA2
GB2
GA2
GCO
GC1
GC2
GS2
GSO
MTFC
PRETRANSLATOR CONNECTOR I
(SAME AS CONNECTOR O)
B605/BO
B605/EO
B609/F3
FIRST REG PREF
INT REG PREF
LAST REG PREF
FIRST ORIG REG
INT ORIG REG
LAST ORIG REG
PRETRANSLATOR CONNECTOR
(REGISTER PART)
PRTC-R
SHEET NOTES:
1. OPTION ASSIGNMENT:
(A) 2/X TROUBLE CARD
(B) 1/X TROUBLE CARD SINGLE SIDED
(C) 1/X TROUBLE CARD DOUBLE SIDED
ISSUE 4
SFD-10-01-B604
PRETRANSLATOR PREFERENCE AND SEIZURE
BELL TELEPHONE LABORATORIES INCORPORATED
6S
PRINTED IN U.S.A.
SFD-10-01-B604

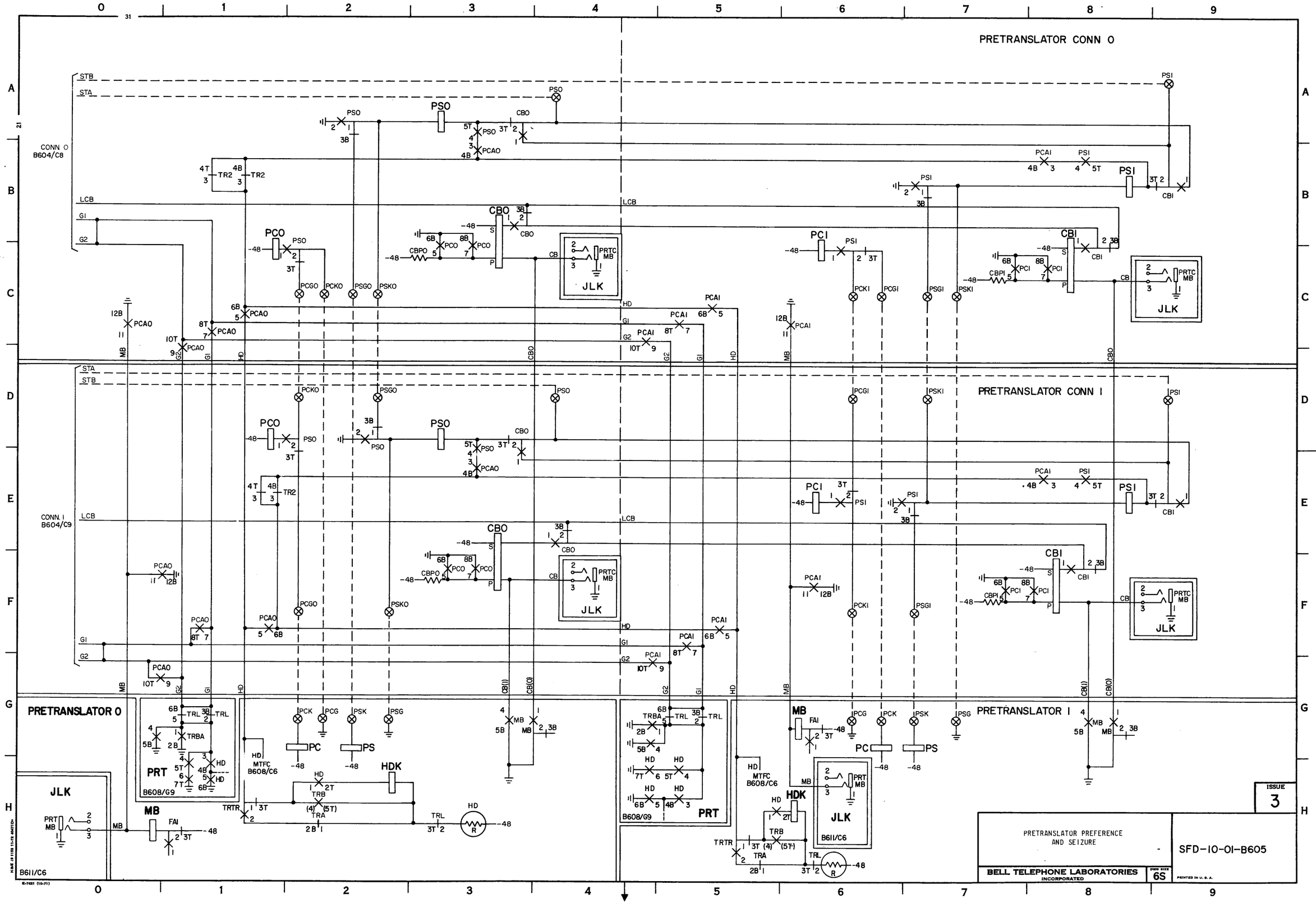

SFD-10-01-B605

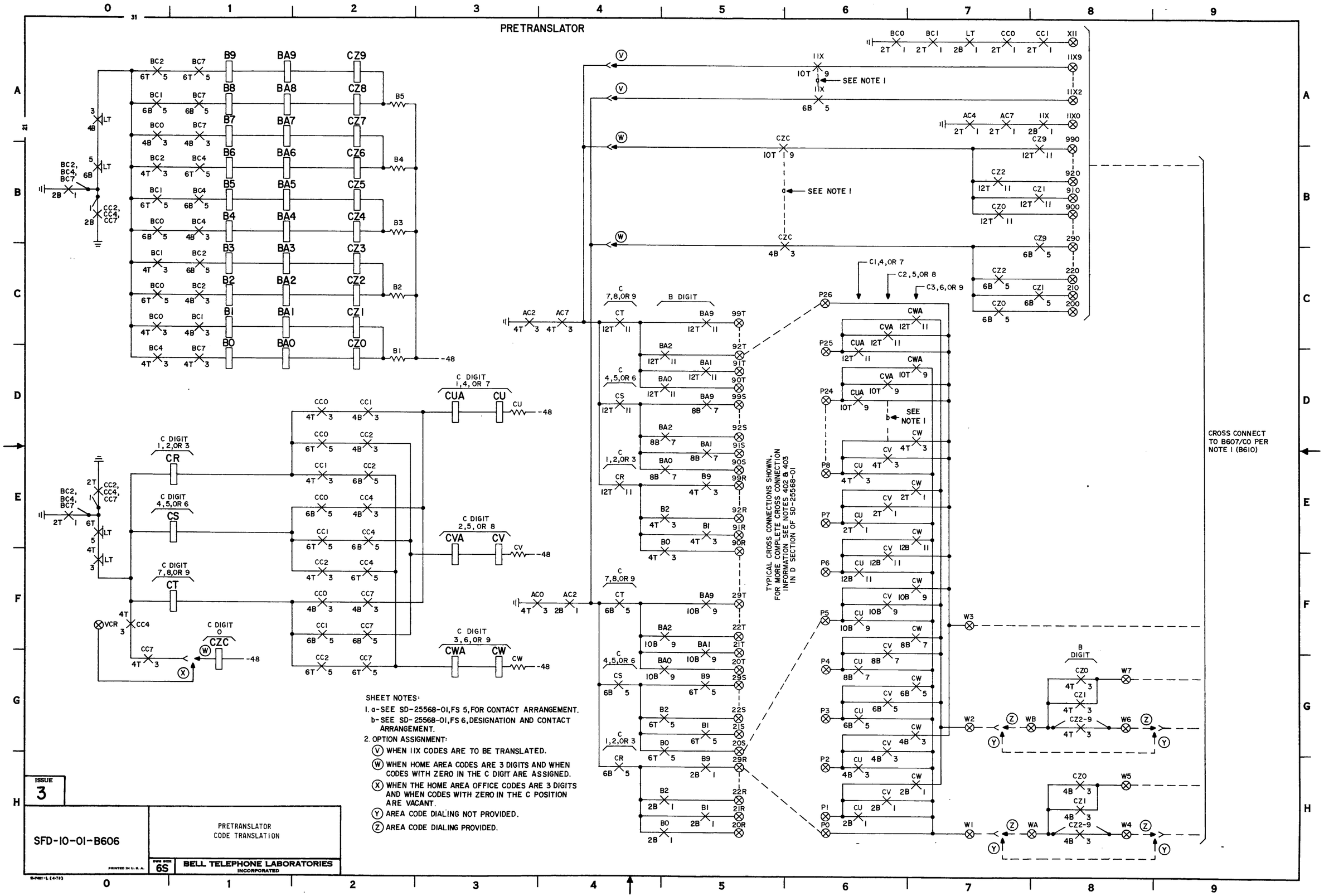
PRETRANSLATOR
B9 B8 B7 B6 B5 B4 B3 B2 B1 B0
BA9 BA8 BA7 BA6 BA5 BA4 BA3 BA2 BA1 BA0
CZ9 CZ8 CZ7 CZ6 CZ5 CZ4 CZ3 CZ2 CZ1 CZ0
C DIGIT 1,4,OR 7
CUA CU
C DIGIT 1,2,OR 3
CR
C DIGIT 4,5,OR 6
CS
C DIGIT 2,5,OR 8
CVA CV
C DIGIT 7,8,OR 9
CT
C DIGIT 0
CZC
C DIGIT 3,6,OR 9
CWA CW
B DIGIT
SEE NOTE 1
TYPICAL CROSS CONNECTIONS SHOWN. FOR MORE COMPLETE CROSS CONNECTION INFORMATION SEE NOTES 402 & 403 IN D SECTION OF SD-25568-01
CROSS CONNECT TO B607/CO PER NOTE 1 (B610)
C1,4,OR 7
C2,5,OR 8
C3,6,OR 9
SHEET NOTES:
1. a-SEE SD-25568-01,FS 5,FOR CONTACT ARRANGEMENT.
b-SEE SD-25568-01,FS 6,DESIGNATION AND CONTACT ARRANGEMENT.
2. OPTION ASSIGNMENT:
(V) WHEN 11X CODES ARE TO BE TRANSLATED.
(W) WHEN HOME AREA CODES ARE 3 DIGITS AND WHEN CODES WITH ZERO IN THE C DIGIT ARE ASSIGNED.
(X) WHEN THE HOME AREA OFFICE CODES ARE 3 DIGITS AND WHEN CODES WITH ZERO IN THE C POSITION ARE VACANT.
(Y) AREA CODE DIALING NOT PROVIDED.
(Z) AREA CODE DIALING PROVIDED.
ISSUE 3
SFD-10-01-B606
PRETRANSLATOR CODE TRANSLATION
DWG SIZE 6S
BELL TELEPHONE LABORATORIES INCORPORATED
PRINTED IN U.S.A.
SFD-10-01-B606

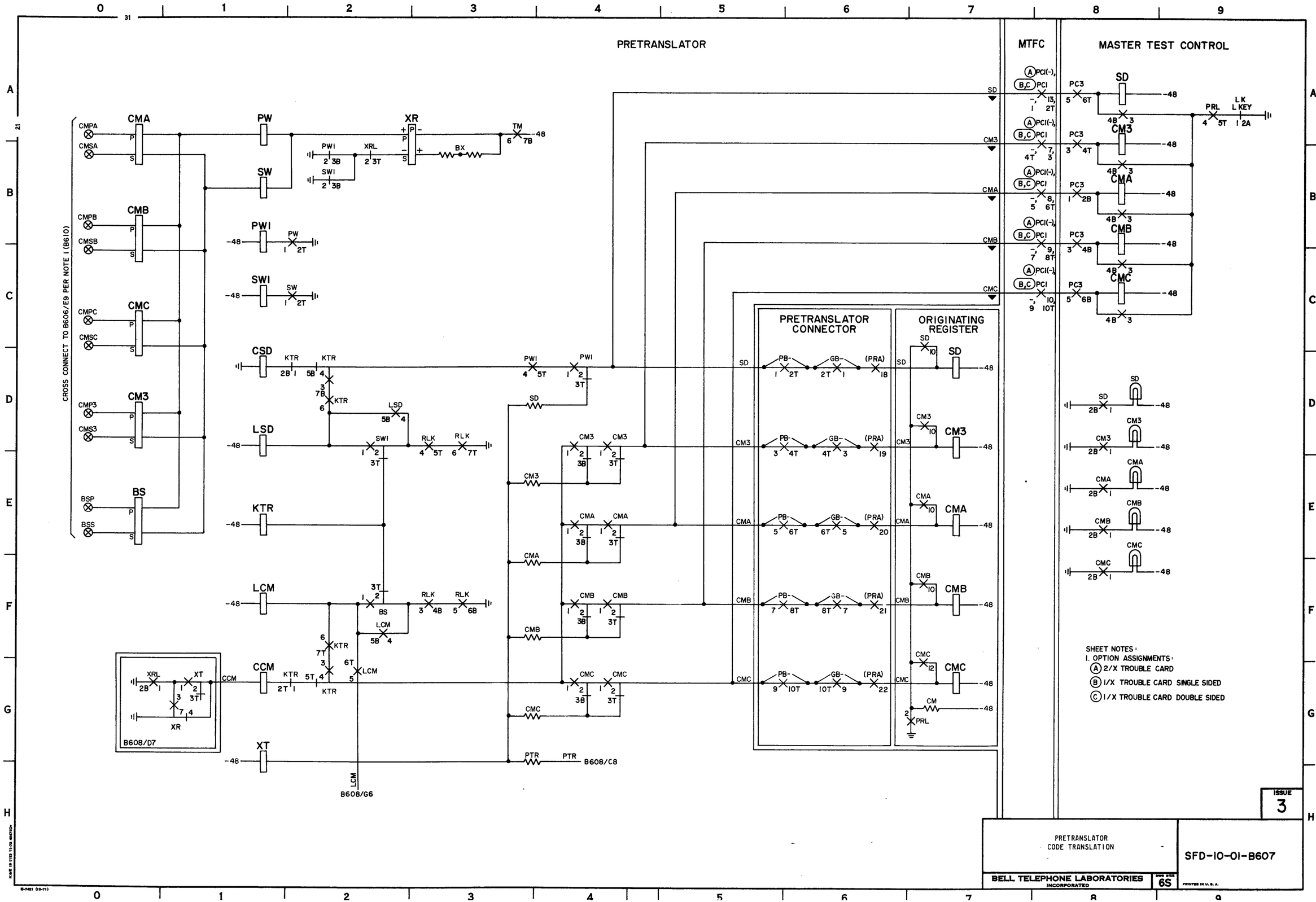

SFD-10-01-B607

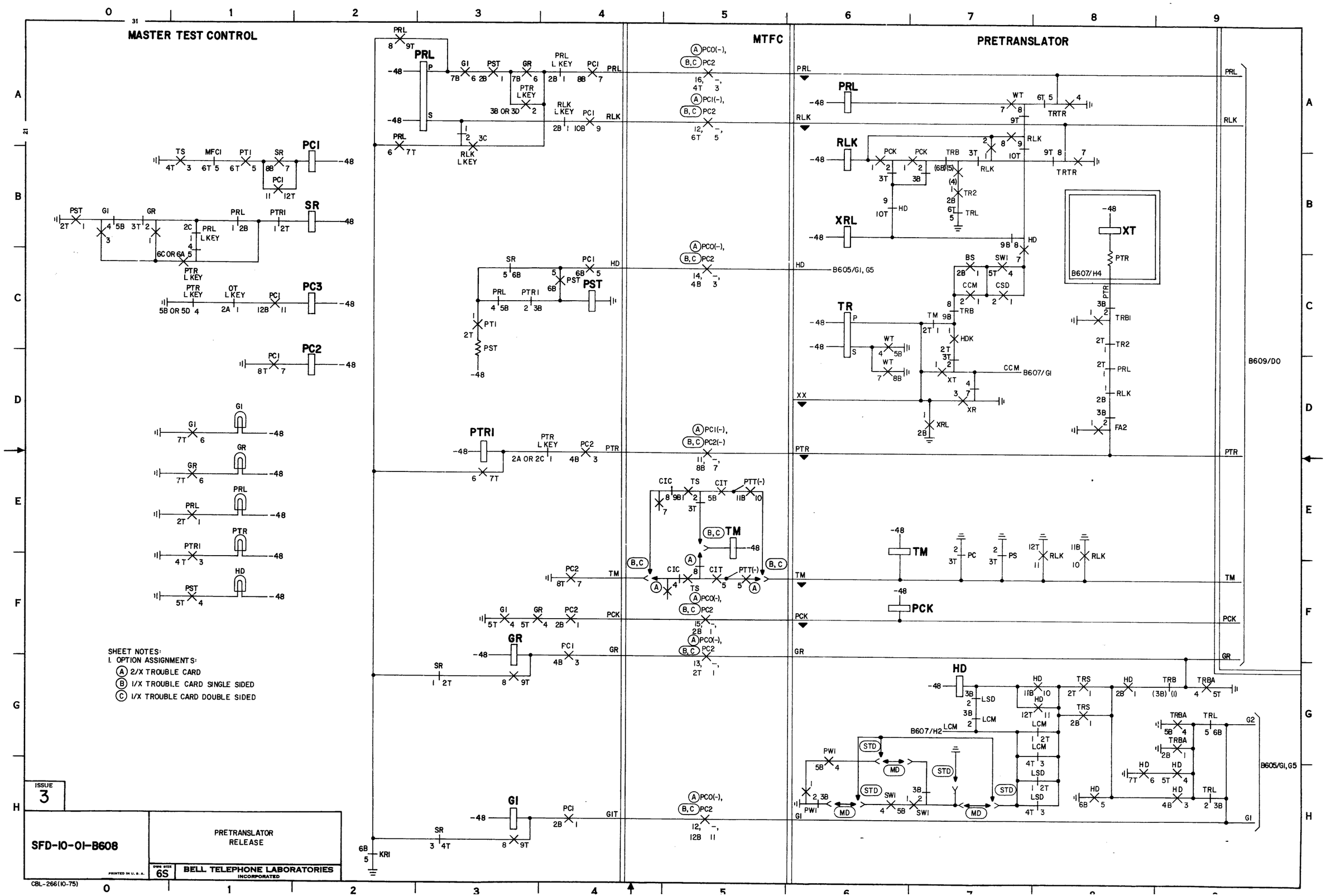

SFD-10-01-B608

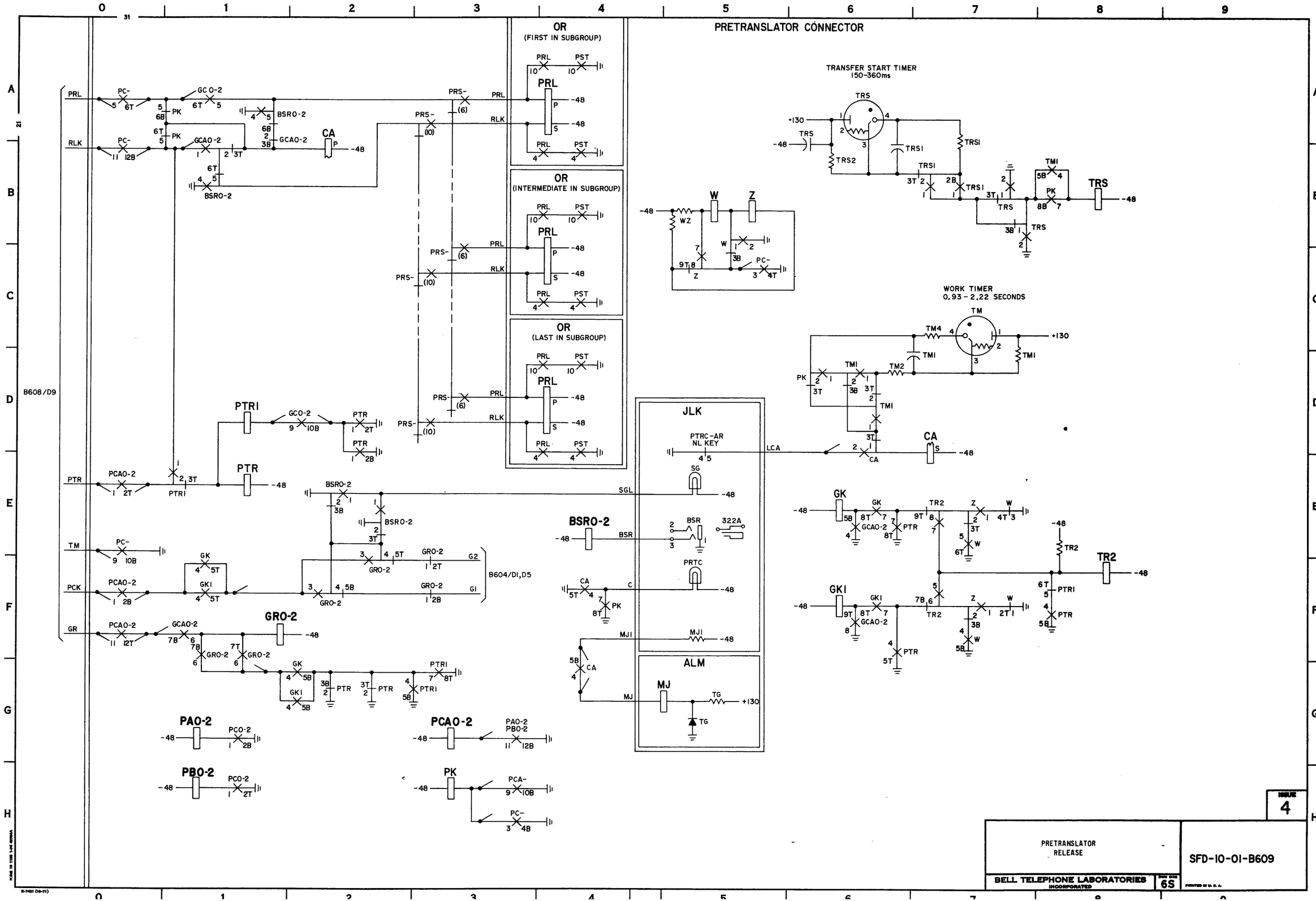

SFD-10-01-B609

NOTES:

1.

		CROSS CONNECT								OR COIN RETURN	REMARKS
	FROM	TO									
		AREA CODE DIALING NOT PROVIDED			AREA CODE DIALING PROVIDED						
		DIGITS EXPECTED			DIGITS EXPECTED						
		3	7	7 OR 8 (STA DELAY)	3	7	7 OR 8 (STA DELAY)	10	10 OR 11 (STA DELAY)		
	W1	-	BSS	BSP	← WA →						
	W2	-	BSS	BSP	← WB →						
	W3	CMS3			CMS3					NO	VAC CODE
		CMP3			CMP3					YES	
	W4					BSS	BSP				
	W5							CMSC	CMRC		
	W6					BSS	BSP				
	W7							CMSC	CMRC		
ZERO IN C DIGIT NOT PROV	VCR	CMS3			CMS3					NO	VAC CODE
		CMP3			CMP3					YES	
ZERO IN C DIGIT PROV	200 TO 990	CMS3			CMS3					NO	VAC CODE
		CMP3			CMP3					YES	
			BSS	BSP		BSS	BSP				
								CMSC	CMRC		
	XII	CMS3			CMS3					NO	3 DIGIT SERVICE CODE OR VAC CODE
		CMP3			CMP3					YES	
	11X0	CMS3			CMS3					NO	VAC CODE
		CMP3			CMP3					YES	
	11X(2-9)	CMS3			CMS3					NO	3 DIGIT SERVICE CODE OR VAC CODE
		CMR3			CMR3					YES	
			BSS	BSP		BSS	BSP				

CROSS CONNECT INFORMATION FOR FEATURES SELDOM USED IS CROSS HATCHED.

2. ASSIGNMENT OF P TERMINALS

TABLE A

OFFICE CODE HAVING "C" DIGIT			ASSIGN TO P-TERM.
1, 4, OR 7	2, 5, OR 8	3, 6, OR 9	
NO. OF DIGITS TO BE AWAITED			
7	7	7	0
7	7	7 OR 8	1
7	7	3	2
7	7 OR 8	7	3
7	7 OR 8	7 OR 8	4
7	7 OR 8	3	5
7	3	7	6
7	3	7 OR 8	7
7	3	3	8
7 OR 8	7	7	9
7 OR 8	7	7 OR 8	10
7 OR 8	7	3	11
7 OR 8	7 OR 8	7	12
7 OR 8	7 OR 8	7 OR 8	13
7 OR 8	7 OR 8	3	14
7 OR 8	3	7	15
7 OR 8	3	7 OR 8	16
7 OR 8	3	3	17
3	7	7	18
3	7	7 OR 8	19
3	7	3	20
3	7 OR 8	7	21
3	7 OR 8	7 OR 8	22
3	7 OR 8	3	23
3	3	7	24
3	3	7 OR 8	25
3	3	3	26

TABLE B

XOX OR XIX CODE HAVING "C" DIGIT			ASSIGN TO P-TERM.
1, 4, OR 7	2, 5, OR 8	3, 6, OR 9	
NO. OF DIGITS TO BE AWAITED			
10	10	10	0
10	10	10 OR 11	1
10	10	3	2
10	10 OR 11	10	3
10	10 OR 11	10 OR 11	4
10	10 OR 11	3	5
10	3	10	6
10	3	10 OR 11	7
10	3	3	8
10 OR 11	10	10	9
10 OR 11	10	10 OR 11	10
10 OR 11	10	3	11
10 OR 11	10 OR 11	10	12
10 OR 11	10 OR 11	10 OR 11	13
10 OR 11	10 OR 11	3	14
10 OR 11	3	10	15
10 OR 11	3	10 OR 11	16
10 OR 11	3	3	17
3	10	10	18
3	10	10 OR 11	19
3	10	3	20
3	10 OR 11	10	21
3	10 OR 11	10 OR 11	22
3	10 OR 11	3	23
3	3	10	24
3	3	10 OR 11	25
3	3	3	26

ISSUE 3

SFD-10-01-B610

CROSS CONNECTION INFORMATION

DWG SIZE 6S

BELL TELEPHONE LABORATORIES INCORPORATED

PRINTED IN U. S. A.

E5-7481-L (4-73)

SFD-10-01-B610

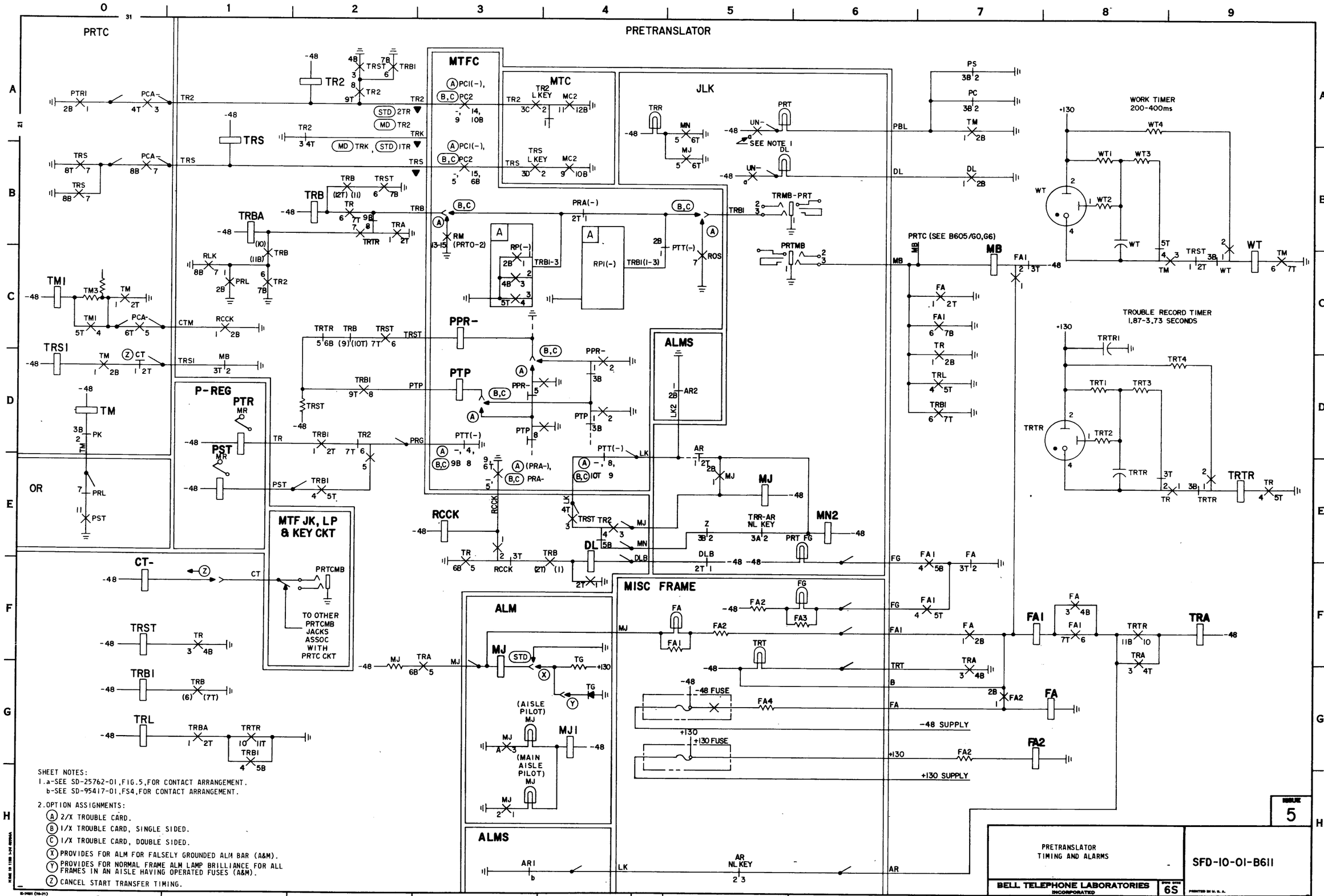

SFD-10-01-B611

ESTABLISHING DIALING CONNECTION

INDEX

CAUTION!

DUE TO THE SIMPLIFIED NATURE OF THIS DOCUMENT, INFORMATION SHOWN MAY NOT BE COMPLETE.

DOUBLE SIDED 2/X TROUBLE RECORD CARD (E-5488)						KEY(S) OR SWITCH(ES) USED TO SIMULATE TROUBLE RECORD			
FUNCTION			SEE NOTE	DESIGNATION PERFORATED	LOCATION ON CARD	KEY DESIGNATION	SWITCH DESIGNATION	SWITCH POSITION	KEY DESIGNATION
TYPE OF CALL						DT/OR	TSTA	DT/OR	
MARKER				MKR DTM	S8,31				
		TENS		DRT(0,1)	S8,54,S8,A	MT(0-11)			MTTI
		UNITS		DR(2/5)	S8,44,50-53		MTU	0-9	
LINE LOCATION	FRAME	TENS		FT-(1/4),FT-(2/4)	R1,00-03	FT(0-5)	FT	0-5	
		UNITS		FU-(2/5)	R1,04-13	FU(0-9)	FU	0-9	
	VERTICAL GROUP	TENS		VGT/T,(0/1)	SA3,20,21	VG(0-11)			VGTI
		UNITS		VGT/U,(2/5)	SA3,22-31		VGU	0-9	
	HORIZONTAL GROUP			HGT-(2/5)	SA3,32-41	HG(0-9)	HG	0-9	
	VERTICAL FILE			VFT-(0-4)	SA3,42-51	VF(0-4)	VF	0-4	
CLASS OF SERVICE	30,60 OR 100 CLASSES	TENS	1A	CS/T-(2/5)	SA2,B,00-03	CST(0-9)	CST	0-9	
		UNITS		CS/U-(2/5)	SA2,04,10-13	CSU(0-9)	CSU	0-9	
	30 OR 60 CLASSES	0-29	1B	CGA	SA2,24				
		30-59		CGB	SA2,30	CGB			CGB
RATE TREATMENT		TENS 0		CGA	SA2,24	CSGA			CSGA
		TENS 1		CGB	SA2,30	CSGB			CSGB
		UNITS		RTE-(2/5)	SA2,14,20-23	CRU(0-9)	CRU	0-9	
TRUNK LINK	FRAME	TENS		FS/T-(1/3)	SA0,21-23	FG(0-2)			FG(0-2)
		UNITS		FS/U-(2/5)	SA0,24,30-33	FS(0-9)	FS	0-9	
			3			FS OR NTFS			FS OR NTFS
TRUNK (ORIGINATING REGISTER)		TENS		TS/T-(0)	SA0,34				
		UNITS		TS/U-(2/5)	SA0,41-44,50	TS(0-9)	TSU	0-9	
			3			TS OR NTTS			TS OR NTTS
LINE SERVED BY LINE LINK	MIXED LINK FRAME		2	MLF	S6,53	MLF	RG	MLF	
	DIAL PULSE			D,TG/T(0),TG/U(4,7)	S6,54,SA0,04,14,20			DP	
	TOUCH TONE			MF,TG/T(0),TG/U(0,1)	S6,A,SA0,04,11,12	MF		MF	
	MORE THAN 2 REG GROUPS		5	TG/T(0),TG/U-(2/5)	SA0,04,11-14,20	RT(0-3)		RT(0-3)	
CHANNEL				CH-(2/5)	RA7,24,30-33	CH(0-9)	CH	0-9	
JUNCTOR STEP				STP1/STP2	RA8,52,53	STP1/STP2			STP1/STP2
JUNCTOR GROUP			4	JG(0-4)	RA7,44,50-53	JSQ(0-5)	JSQ	0-5	
OBSERVED CALL				OBS	R6,52	OBS			OBS

SHEET NOTES:

1A. GENERALLY, CLASS OF SERVICE KEY SHOULD NOT BE OPERATED ON DIAL TONE CLASS OF TEST. THIS PERMITS THE MARKER TO OBTAIN CLASS OF SERVICE DIRECTLY FROM THE LINE LINK CROSS CONNECTIONS ASSOCIATED WITH THE LINE LOCATION SETUP. USE OF CLASS OF SERVICE KEYS PERMITS SIMULATION OF ANY CLASS OF SERVICE FOR ANY LINE LOCATION BUT DOES NOT USE THE LINE LINK CROSS CONNECTIONS.

1B. WHEN 60 CLASSES OF SERVICE ARE PROVIDED, THE CA AND CB CROSS CONNECTIONS OF THE LINE LINK FRAME CANNOT BE CHECKED ON DIAL TONE CLASS OF TEST.

2. WHEN OPTION (B) IS PROVIDED ON B105, IT CANNOT DEFINITELY BE DETERMINED FROM THE CARD WHICH OF THE KEY OR SWITCH POSITIONS MLF, RT-(0-3), OR VP-(0-2) SHOULD BE USED. OFFICE RECORDS FOR THE PARTICULAR LINE LOCATION SHOULD BE CONSULTED.

3. USE FS AND TS RATHER THAN NTFS AND NTTS KEYS UNLESS REGISTER TO BE SELECTED IS MADE BUSY.

4. CONSULT JUNCTOR SEQUENCE TABLE ON B708 FOR SETTING OF JSQ KEY OF SWITCH FOR PARTICULAR JG- AND STP- DESIGNATIONS PERFORATED.

5. REGISTER GROUPS 2-5.

ISSUE 3

SFD-10-01-B702

SIMULATION OF DIAL TONE CALLS WHICH PRODUCE 2/X DOUBLE SIDED TROUBLE RECORD CARDS (E5488)

TYPE SIZE 6S

BELL TELEPHONE LABORATORIES INCORPORATED

PRINTED IN U.S.A.

CBL-266(10-75)

SFD-10-01-B702

DIAL TONE CALL
2/X DOUBLE SIDED TROUBLE CARD

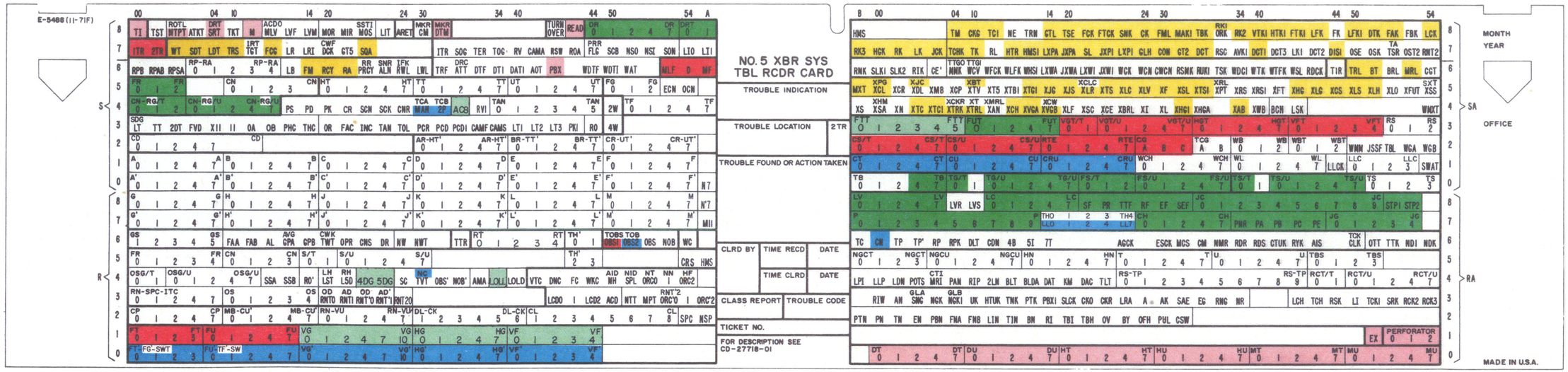

- MISCELLANEOUS
- INPUT TO MARKER
- CIRCUITS OR PATHS USED
- MARKER OUTPUT TO ORIGINATING REGISTER
- PROGRESS AND TROUBLE INDICATIONS
- DESIGNATIONS WHICH MAY BE PERFORATED UNDER SPECIAL CONDITIONS

ISSUE 4

NO. 5 XBR 2/X DOUBLE SIDED TROUBLE RECORD CARD (E5488) INDICATING DESIGNATIONS WHICH MAY BE PERFORATED ON A DIAL TONE - MARKER TROUBLE RECORD CARD

BELL TELEPHONE LABORATORIES INCORPORATED

DWG SIZE 6S

SFD-10-01-B703

PRINTED IN U.S.A.

E-7481 (10-71)

SFD-10-01-B703
7 SHEETS, SHEET 1

DOUBLE SIDED 1/X TROUBLE RECORD CARD (E-4393)					KEY(S) OR SWITCH(ES) USED TO SIMULATE TROUBLE RECORD			
FUNCTION			SEE NOTE	DESIGNATION PERFORATED	LOCATION ON CARD	KEY DESIGNATION	SWITCH DESIGNATION	SWITCH POSITION	KEY DESIGNATION
TYPE OF CALL						DT/OR	TSTA	DT/OR	
MARKER				MKR	S8,30	MT(0-11)			
		TENS 0	6	DRTO	S8,54				
		TENS 1		DRT1	S7,54				MTT1
		UNITS		DR(0-9)	S8,34,40-44,50-53		MTU	0-9	
LINE LOCATION	FRAME	TENS		FT-(1/4),FT-(2/4)	R1,00-03	FT(0-5)	FT	0-5	
		UNITS		FU-(2/5)	R1,04,10-13	FU(0-9)	FU	0-9	
	VERTICAL GROUP	TENS		VGT(0-11)	SA4,31-34, 40-44,50-52	VG(0-11)			VGT1
		UNITS					VGU	0-9	
	HORIZONTAL GROUP			HGT(0-9)	SA3,00-04,10-14	HG(0-9)	HG	0-9	
	VERTICAL FILE			VFT(0-4)	SA3,20-24	VF(0-4)	VF	0-4	
CLASS OF SERVICE	30,60,OR 100 CLASSES	TENS	1A	CS(0-29)	SA2,00-54	CST(0-9)	CST	0-9	
		UNITS				CSU(0-9)	CSU	0-9	
	30 OR 60 CLASSES	0-29	1B	CGA	R1,53				
		30-59		CGB	R1,54	CGB			CGB
RATE TREATMENT		TENS 0		CGA	R1,53	CSGA			CSGA
		TENS 1		CGB	R1,54	CSGB			CSGB
		UNITS		CS(20-29)	SA2,40-44,50-54	CRU(0-9)	CRU	0-9	FG(0-2)
TRUNK LINK	FRAME	TENS		FS(0-29)	SA0,00-54	FG(0-2)			FG
		UNITS				FS(0-9)	FS	0-9	
			3			FS OR NTFS			FS OR NTFS
TRUNK (ORIGINATING REGISTER)				TS(0-9)	RA8,00-34	TS(0-9)	TSU	0-9	
			3			TS OR NTTS			TS OR NTTS
LINE SERVED BY LINE LINK	MIXED LINK FRAME		2	MLF	S7,23	MLF	RG	MLF	
	DIAL PULSE			D,TGO	S7,24,SA1,11			DP	
	TOUCH TONE			MF,TG1	S7,30,SA1,12	MF		MF	
	MORE THAN 2 REG GROUPS		5	TG(2-5)	SA1,13-21	RT(0-3)		RT(0-3)	
CHANNEL				CH(0-9)	RA5,10-14,20-24	CH(0-9)	CH	0-9	
JUNCTOR STEP				STP1/STP2	RA5,53,54	STP1/STP2)			STP1/STP2
JUNCTOR GROUP			4	JG(0-4)	RA6,20-24	JSQ(0-5)	JSQ	0-5	
OBSERVED CALL				OBS	S2,21	OBS			OBS

SHEET NOTES:

1A. GENERALLY, CLASS OF SERVICE KEY SHOULD NOT BE OPERATED ON DIAL TONE CLASS OF TEST. THIS PERMITES THE MARKER TO OBTAIN CLASS OF SERVICE DIRECTLY FROM THE LINE LINK CROSS CONNECTIONS ASSOCIATED WITH THE LINE LOCATION SETUP. USE OF CLASS OF SERVICE KEYS PERMITS SIMULATION OF ANY CLASS OF SERVICE FOR ANY LINE LOCATION BUT DOES NOT USE THE LINE LINK CROSS CONNECTIONS

1B. WHEN 60 CLASSES OF SERVICE ARE PROVIDED, THE CA AND CB CROSS CONNECTIONS OF THE LINE LINK FRAME CANNOT BE CHECKED ON DIAL TONE CLASS OF TEST.

2. WHEN OPTION (B) IS PROVIDED ON B105, IT CANNOT DEFINITELY BE DETERMINED FROM THE CARD WHICH OF THE KEYS OR SWITCH POSITIONS MLF,RT(0-3), OR VP(0-2) SHOULD BE USED. OFFICE RECORDS FOR THE PARTICULAR LINE LOCATION SHOULD BE CONSULTED.

3. USE FS AND TS RATHER THAN NTFS AND NTTS KEYS UNLESS REGISTER TO BE SELECTED IS MADE BUSY.

4. CONSULT JUNCTOR SEQUENCE TABLE ON B708 FOR SETTING OF JSQ KEY OR SWITCH FOR PARTICULAR JG- AND STP- DESIGNATIONS PERFORATED.

5. REGISTER GROUPS 2-5.

6. OBSERVE DRTO/1 AND DRO-9 AND CONSULT OFFICE RECORDS TO DETERMINE WHETHER RECORD WAS PRODUCED BY A DIAL TONE MARKER.

ISSUE 3

SFD-10-01-B704

SIMULATION OF DIAL TONE CALLS WHICH PRODUCE 1/X DOUBLE SIDED TROUBLE RECORD CARDS (E4393)

DWG SIZE 6S

BELL TELEPHONE LABORATORIES INCORPORATED

PRINTED IN U.S.A.

CBL-266(10-75)

SFD-10-01-B704

DIAL TONE CALL
I/X DOUBLE SIDED TROUBLE CARD

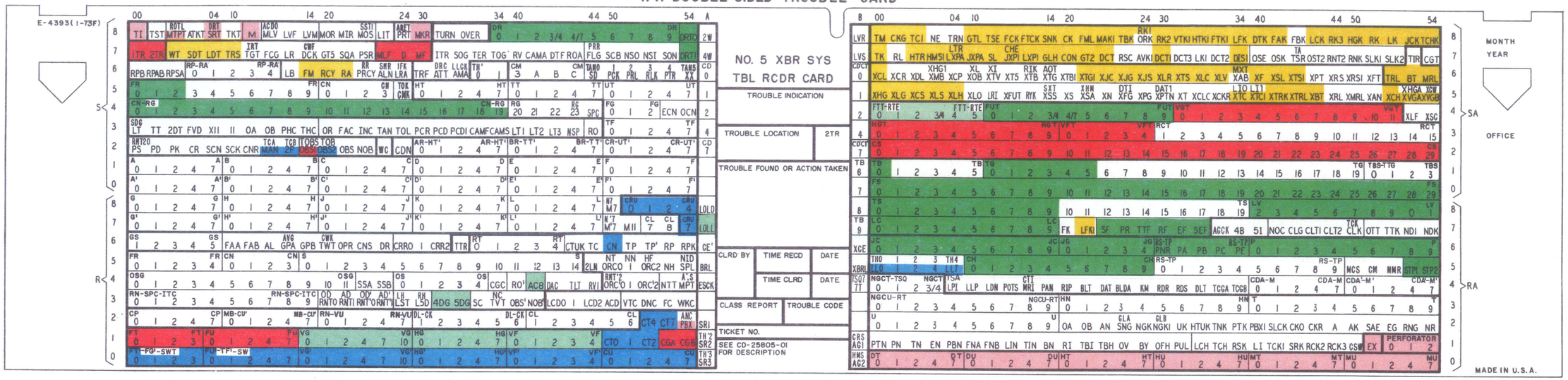

- MISCELLANEOUS
- INPUT TO MARKER
- CIRCUITS OR PATHS USED
- MARKER OUTPUT TO ORIGINATING REGISTER
- PROGRESS AND TROUBLE INDICATIONS
- DESIGNATIONS WHICH MAY BE PERFORATED UNDER SPECIAL CONDITIONS

ISSUE 4

NO. 5 XBR I/X DOUBLE SIDED TROUBLE RECORD CARD (E4393) INDICATING DESIGNATIONS WHICH MAY BE PERFORATED ON A DIAL TONE MARKER TROUBLE RECORD CARD

BELL TELEPHONE LABORATORIES INCORPORATED

DWG SIZE 6S

SFD-10-01-B705

PRINTED IN U.S.A.

SFD-10-01-B705
7 SHEETS, SHEET 1

SINGLE SIDED I/X TROUBLE RECORD CARD (E3638)						KEY(S) OR SWITCH(ES) USED TO SIMULATE TROUBLE RECORD			
FUNCTION			SEE NOTE	DESIGNATION PERFORATED	LOCATION ON CARD	KEY DESIGNATION	SWITCH DESIGNATION	SWITCH POSITION	KEY DESIGNATION
TYPE OF CALL						DT/OR	TSTA	DT/OR	
MARKER			6	MKR	S8,15	MT(0-11)			
		TENS 0		DRTO	S7,19				
		TENS 1		DRT1	S7,20				MTT1
		UNITS		DR(0-9)	S8,19-28		MTU	0-9	
LINE LOCATION	FRAME	TENS		FT-(1/4),FT-(2/4)	R1,0-3	FT(0-3)	FT	0-5	
		UNITS		FU-(2/5)	R1,4-8	FU(0-9)	FU	0-9	
	VERTICAL GROUP	TENS		VGT(0-11)	S3,30-41	VG(0-11)			VGT1
		UNITS					VGU	0-9	
	HORIZONTAL GROUP			HGT(0-9)	S3,45-54	HG(0-9)	HG	0-9	
	VERTICAL FILE			VFT(0-4)	S3,55-59	VF(0-4)	VF	0-4	
CLASS OF SERVICE	30,60 OR 100 CLASSES	TENS	1A	CS(0-29)	S2,30-59	CST(0-9)	CST	0-9	
		UNITS				CSU(0-9)	CSU	0-9	
	30 OR 60 CLASSES	0-29	1B	CGA	S3,42				
		30-59		CGB	S3,43	CGB			CGB
TRUNK LINK	FRAME	TENS		FS(0-19)	S1,30-49	FG(0-1)			FG(0-1)
		UNITS				FS(0-9)	FS	0-9	
			3			FS OR NTFS			FS OR NTFS
TRUNK (ORIGINATING REGISTER)		TENS		TS(0-9)	S0,30-39				
		UNITS				TS(0-9)	TSU	0-9	
			3			TS OR NTTS			TS OR NTTS
LINE SERVED BY LINE LINK	MIXED LINK FRAME		2	MLF	S7,0	MLF	RG	MLF	
	DIAL PULSE			D,TGO	S7,1,R8,30			DP	
	TOUCH TONE			MF,TG1	S7,2,R8,31	MF		MF	
	MORE THAN 2 REG GROUPS		5	TG(2-5)	R8,32-35	RT(0-3)		RT(0-3)	
CHANNEL				CH(0-9)	R7,50-59	CH(0-9)	CH	0-9	
JUNCTOR STEP				STP1/STP2	R5,30,31	STP1/STP2			STP1/STP2
JUNCTOR GROUP			4	JG(0-4)	R6,40-44	JSQ(0-5)	JSQ	0-5	
OBSERVED CALL				OBS	S3,8	OBS			OBS

SHEET NOTES:

1A. GENERALLY, CLASS OF SERVICE KEY SHOULD NOT BE OPERATED ON DIAL TONE CLASS OF TEST. THIS PERMITS THE MARKER TO OBTAIN CLASS OF SERVICE DIRECTLY FROM THE LINE LINK CROSS CONNECTIONS ASSOCIATED WITH THE LINE LOCATION SETUP. USE OF CLASS OF SERVICE KEYS PERMITS SIMULATION OF ANY CLASS OF SERVICE FOR ANY LINE LOCATION BUT DOES NOT USE THE LINE LINK CROSS CONNECTIONS.

1B. WHEN 60 CLASS OF SERVICE ARE PROVIDED, THE CA AND CB CROSS CONNECTIONS OF THE LINE LINK FRAME CANNOT BE CHECKED ON DIAL TONE CLASS OF TEST.

2. WHEN OPTION (B) IS PROVIDED ON B105, IT CANNOT DEFINITELY BE DETERMINED FROM THE CARD WHICH OF THE KEYS OR SWITCH POSITIONS MLF, RT-(0-3), OR VP-(0-2) SHOULD BE USED. OFFICE RECORDS FOR THE PARTICULAR LINE LOCATION SHOULD BE CONSULTED.

3. USE FS AND TS RATHER THAN NTFS AND NTTS KEYS UNLESS REGISTER TO BE SELECTED IS MADE BUSY.

4. CONSULT JUNCTOR SEQUENCE TABLE ON B708 FOR SETTING OF JSQ KEY OR SWITCH FOR PARTICULAR JG- AND STP- DESIGNATIONS PERFORATED.

5. REGISTER GROUPS 2-5.

6. OBSERVE DRTO/1 AND DRO-9 AND CONSULT OFFICE RECORDS TO DETERMINE WHETHER RECORD WAS PRODUCED BY A DIAL TONE MARKER.

ISSUE 3

SFD-10-01-B706

SIMULATION OF DIAL TONE CALLS WHICH PRODUCE 1/X SINGLE SIDED TROUBLE RECORD CARDS (E3638)

PRINTED IN U.S.A.

DWG SIZE 6S

BELL TELEPHONE LABORATORIES INCORPORATED

CBL-266(10-75)

SFD-10-01-B706

DIAL TONE CALL
I/X SINGLE SIDED TROUBLE CARD

E-3638 (11-71)

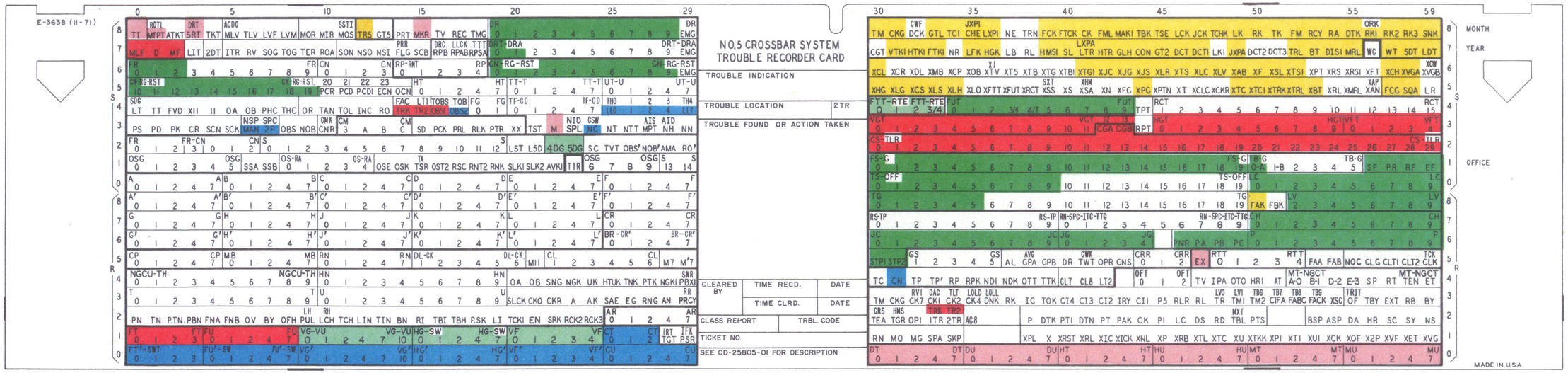

MISCELLANEOUS

INPUT TO MARKER

CIRCUITS OR PATHS USED

MARKER OUTPUT TO ORIGINATING REGISTER

PROGRESS AND TROUBLE INDICATIONS

DESIGNATIONS WHICH MAY BE PERFORATED UNDER SPECIAL CONDITIONS

ISSUE 3

NO. 5 XBR I/X SINGLE SIDED TROUBLE RECORD CARD (E3638) INDICATING DESIGNATIONS WHICH MAY BE PERFORATED ON A DIAL TONE MARKER TROUBLE RECORD CARD -

SFD-10-01-B707

BELL TELEPHONE LABORATORIES INCORPORATED

DWG SIZE 6S

PRINTED IN U.S.A.

E-7481 (10-71)

SFD-10-01-B707

7 SHEETS, SHEET 1

JUNCTOR SUBGROUP SELECTED (JG- DESIGNATION PERFORATED)

NUMBER OF TRUNK LINK FRAMES			JUNCTOR STEP POSITION (STP1 OR STP2)	JUNCTOR SEQUENCE (JSQ-)					
SINGLE	PAIRED	TRIPLED		0	1	2	3	4	5
2	4	6	1 2	JG0 JG3	JG1 JG4	JG2 JG3	JG0 JG4	JG1 JG3	JG2 JG4
2-3	4-6	6-9	1 2	JG0 JG1	JG1 JG2	JG2 JG0	JG0 JG1	JG1 JG2	JG2 JG0
3	6	9	1 2	JG0 JG3	JG1 JG3	JG2 JG3	JG0 JG3	JG1 JG3	JG2 JG3
4	8	12	1 2	JG0 JG2	JG1 JG2	JG0 JG2	JG1 JG2	JG0 JG2	JG1 JG2
5	10	15	1 2	JG0 JG1	JG1 JG0	JG0 JG1	JG1 JG0	JG0 JG1	JG1 JG0
6	12	18	1 2	JG0 JG1	JG0 ** JG1/2	* JG0/1 ** JG0/1	JG0 ** JG1/2	JG0 JG1	** JG0/1 ** JG0/2
7	14	21	1 2	JG0 JG1	JG0 ** JG1/2	JG0 JG1	JG0 ** JG1/2	JG0 JG1	** JG0/1 ** JG0/2
8	16	24	1 2	JG0 JG1	JG0 JG1	JG0 JG1	JG0 JG1	JG0 JG1	JG0 JG1
9	18	27	1 2	JG0 JG1	JG0 JG1	JG0 JG1	JG0 JG1	JG0 JG1	JG0 JG1
10	20	30	1	JG0	JG0	JG0	JG0	JG0	JG0

* JG0 DESIGNATION PERFORATED IF THREE JUNCTOR SUBGROUPS EXIST BETWEEN LINE LINK AND TRUNK LINK FRAMES.
JG1 DESIGNATION PERFORATED IF TWO JUNCTOR SUBGROUPS EXIST BETWEEN LINE LINK AND TRUNK LINK FRAMES.

** LOWER-NUMBERED JG- DESIGNATION PERFORATED IF TWO JUNCTOR SUBGROUPS EXIST BETWEEN LINE LINK AND TRUNK LINK FRAMES.
HIGHER-NUMBERED JG- DESIGNATION PERFORATED IF THREE JUNCTOR SUBGROUPS EXIST BETWEEN LINE LINK AND TRUNK LINK FRAMES.

ISSUE 3

SFD-10-01-B708

CORRELATION BETWEEN
JUNCTOR GROUP, JUNCTOR STEP
AND JUNCTOR SEQUENCE SELECTION

DWG SIZE 6S

BELL TELEPHONE LABORATORIES
INCORPORATED

PRINTED IN U.S.A.

E-24611-L (4-72)

SFD-10-01-B708

AUTOMATIC TROUBLE ANALYSIS EXCEPTION REPORT					KEY(S) OR SWITCH(ES) USED TO SIMULATE TROUBLE RECORD			
FUNCTION			SEE NOTE	TTY OUTPUT	KEY DESIGNATION	SWITCH DESIGNATION	SWITCH POSITION	KEY DESIGNATION
TYPE OF CALL					DT/OR	TSTA	DT/OR	
MARKER				MKR DTM	MT(0-11)			
		TENS	6	MKR.XX				MTTI
		UNITS				MTU	0-9	
LINE LOCATION	FRAME	TENS		FT.X	FT(0-5)	FT	0-5	
		UNITS		FU.X	FU(0-9)	FU	0-9	
	VERTICAL GROUP	TENS		VG.XX	VG(0-11)			VGTI
		UNITS				VGU	0-9	
	HORIZONAL GROUP			HG.X	HG(0-9)	HG	0-9	
	VERTICAL FILE			VF.X	VF(0-4)	VF	0-4	
CLASS OF SERVICE	30,60 OR 100 CLASSES	TENS	1A	CS.XX	CST(0-9)	CST	0-9	
		UNITS			CSU(0-9)	CSU	0-9	
	30 OR 60 CLASSES	0-29	1B	CGA				
		30-59		CGB	CGB			CGB
RATE TREATMENT		TENS 0		CGA	CSGA			CSGA
		TENS 1		CGB	CSGB			CSGB
		UNITS		RTE.X/CS.XX	CRU(0-9)	CRU	0-9	
TRUNK LINK	FRAME	TENS		FS.XX	FG(0-2)			FG(0-2)
		UNITS			FS(0-9)	FS	0-9	
			3		FS OR NTFS			FS OR NTFS
TRUNK (ORIGINATING REGISTER)		TENS		TS.XX				
		UNITS			TS(0-9)	TSU	0-9	
			3		TS OR NTTS			TS OR NTTS
LINE SERVED BY LINE LINK	MIXED LINK FRAME		2	MLF	MLF	RG	MLF	
	DIAL PULSE			D,TG.0			DP	
	TOUCH TONE			MF,TG.1	MF		MF	
	MORE THAN 2 REG GROUPS		5	TG.2-5	RT(0-3)		RT(0-3)	
CHANNEL				CH.X	CH(0-9)	CH	0-9	
JUNCTOR STEP				STP1/STP2	STP1/STP2			STP1/STP2
JUNCTOR GROUP			4	JG.X	JSQ(0-5)	JSQ	0-5	
OBSERVED CALL				OBS	OBS			OBS

SHEET NOTES:

1A. GENERALY, CLASS OF SERVICE KEY SHOULD NOT BE OPERATED ON DIAL TONE CLASS OF TEST. THIS PERMITS THE MARKER TO OBTAIN CLASS OF SERVICE DIRECTLY FROM THE LINE LINK CROSS CONNECTIONS ASSOCIATED WITH THE LINE LOCATION SETUP. USE OF CLASS OF SERVICE KEYS PERMITS SIMULATION OF ANY CLASS OF SERVICE FOR ANY LINE LOCATION BUT DOES NOT USE THE LINE LINK CROSS CONNECTIONS.

1B. WHEN 60 CLASSES OF SERVICE ARE PROVIDED, THE CA AND CB CROSS CONNECTIONS OF THE LINE LINK FRAME CANNOT BE CHECKED ON DIAL TONE CLASS OF TEST.

2. WHEN OPTION (B) IS PROVIDED ON B105, IT CANNOT DEFINITELY BE DETERMINED FROM THE REPORT WHICH OF THE KEY OR SWITCH POSITIONS MLF, RT-(0-3), OR VP-(0-2) SHOULD BE USED, OFFICE RECORDS FOR THE PARTICULAR LINE LOCATION SHOULD BE CONSULTED.

3. USE FS AND TS RATHER THAN NTFS AND NTTS KEYS UNLESS REGISTER TO BE SELECTED IS MADE BUSY.

4. CONSULT JUNCTOR SEQUENCE TABLE ON B708 FOR SETTING OF JSQ KEY OF SWITCH FOR PARTICULAR JG- AND STP- DESIGNATIONS.

5. REGISTER GROUPS 2-5.

6. OBSERVE MKR.XX AND CONSULT OFFICE RECORDS TO DETERMINE WHETHER RECORD WAS PRODUCED BY A DIAL TONE MARKER.

ISSUE 3

SIMULATION OF DIAL TONE CALLS WHICH PRODUCE AN AUTOMATIC TROUBLE ANALYSIS EXCEPTION REPORT

SFD-10-01-B709

BELL TELEPHONE LABORATORIES INCORPORATED

DWG SIZE 6S

PRINTED IN U.S.A.

SFD-10-01-B709

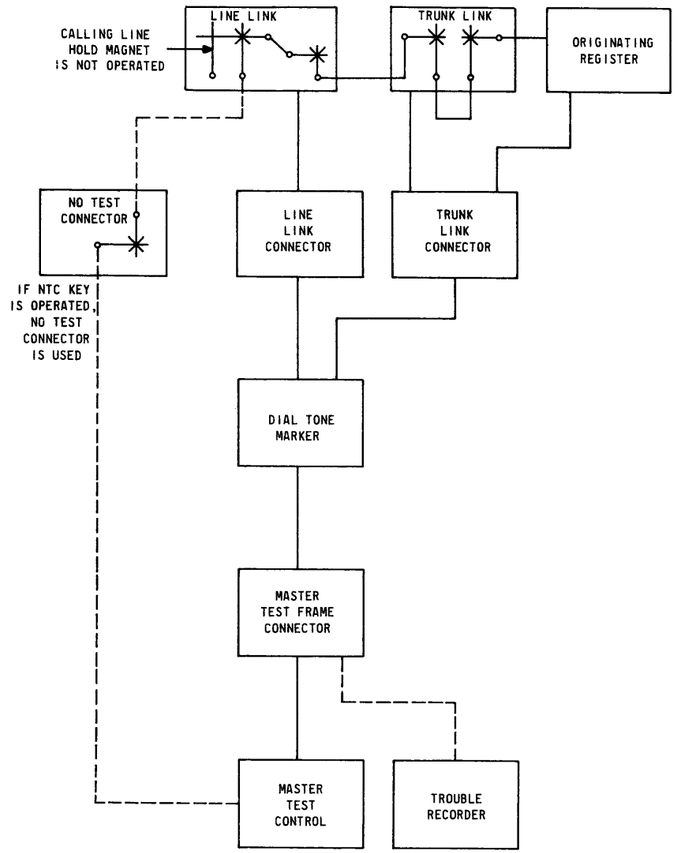

BSP 218-120-501 ISS 7
SD-25800-01 MASTER TEST CONTROL CIRCUIT (MTC)
SD-25918-01 TRUNK TEST CIRCUIT (TTC)
SD-25680-01 AUTOMATIC MONITOR, REGISTER, AND SENDER TEST (AMRST)

SHEET NOTES:

1. KEY(S) OR SWITCH(ES) THAT MUST BE OPERATED TO PERFORM THIS CLASS OF TEST.
2. KEY(S) OR SWITCH(ES) USED TO SIMULATE TROUBLE RECORD (SEE SFD-B702/B704/B706).
3. KEY(S) OR SWITCH(ES) WHICH MAY BE OPERATED TO CAUSE ADDITIONAL ACTIONS OR TEST VARIATIONS FOR THIS PARTICULAR TEST.
4. KEY(S) OR SWITCH(ES) LOCATED ON AMRST PANEL.

SD-25800-01

SEE NOTE	FIG. OR OPT	KEY OR SWITCH	FUNCTION
1	67	DT KEY	DIAL TONE CLASS OF TEST SIMULATES SEIZURE OF DTM BY LINE LINK FRAME USING MTC AND MTFC CIRCUIT.
	74	TSTA SW (DT)	
1,2	19,21	MT (0-11) KEY	MARKER TEST DIRECTS THE MTFC TO CONNECT THIS TEST CIRCUIT (MTC) TO THE MARKER CORRESPONDING TO THE NUMBER OPERATED.
	52	MT SW (0-11)	
	81	MTU SW (0-9)	
		MTTI KEY	
1,2	S	FT (0-3) KEY	FRAME TENS OPERATED TO TRANSMIT THE LINE LINK FRAME TENS DIGIT TO THE MARKER.
	T	FT (0-5) KEY	
	78	FT SW (0-5)	
1,2	6,KX	FU (0-9) KEY	FRAME UNITS OPERATED TO TRANSMIT THE LINE LINK FRAME UNITS DIGIT TO THE MARKER.
	6,ZWP, ZWQ	FU SW (0-9)	
1,2	6,KX	VG (0-9) KEY	VERTICAL GROUP OPERATED TO TRANSMIT THE VERTICAL GROUP TO THE MARKER.
	6,ZF	VG (10-13) KEY	
	6,JF	VGU SW (0-9)	
		VGTI KEY	
1,2	6,KX	HG (0-9) KEY	HORIZONTAL GROUP OPERATED TO TRANSMIT THE HORIZONTAL GROUP TO THE MARKER.
	6,JF	HG SW (0-9)	
1,2	6,RD	VF (0-4) KEY	VERTICAL FILE OPERATED TO TRANSMIT THE VERTICAL FILE TO THE MARKER.
	6,JF	VF SW (0-4)	
1,2	G	MF/MLF KEY (OPR/N-OPR)	ORIGINATING REGISTER GROUP WHEN THE LLF SERVES ONLY MULTIFREQUENCY ORIGINATING REGISTERS OPERATE TO MF. IF LLF SERVES BOTH MULTIFREQUENCY AND DIAL PULSE ORIGINATING REGISTERS OPERATE TO MLF.
	124	RG SW (DP/MF/ MLF)	FOR LLF SERVING DIAL PULSE ORIGINATING REGISTERS MF/MLF KEY SHOULD BE NORMAL OR RG SWITCH OPERATED TO DP.
1,2	7,XA, XB,ZG	CST (0-2) KEY	CLASS OF SERVICE TENS CONTROLS THE CLASS-OF-SERVICE TENS DIGIT TRANSMITTED TO THE MARKER.
	7,XB	CST (0-9) KEY	
	7,JF	CST SW (0-9)	
1,2	7,JH, RY	CSU (0-9) KEY	CLASS OF SERVICE UNITS CONTROLS THE CLASS-OF-SERVICE UNITS DIGIT TRANSMITTED TO THE MARKER.
	7,JF	CSU SW (0-9)	
1,2	37, GC,GD	CGB KEY (OPR/N-OPR)	CLASS GROUP B USED WHEN OFFICE HAS A MAXIMUM OF 60 CLASSES OF SERVICE. SELECTS CLASS GROUP A WITH KEY IN NORMAL POSITION.
		NONE	

SD-25800-01

SEE NOTE	FIG. OR OPT	KEY OR SWITCH	FUNCTION
1,2	7,JI	CRU (0-9) KEY	CUSTOMER RATE TREATMENT UNITS PROVIDE RATE TREATMENT INFORMATION TO MARKER.
	7,JF	CRU SW (0-9)	
		NONE	NO RATE TREATMENT REQUIRED.
1,2	7,ED	CSGA/ CSGB KEY	RATE TREATMENT GROUP A AND B CONTROLS THE RATE TREATMENT GROUP INDICATION TO MARKER.
		NONE	NO RATE TREATMENT REQUIRED.
1	1	ST/RL KEY	START AND RELEASE OPERATED TO ST INITIATES A TEST CALL. OPERATED TO RL CAUSES TEST CALL AND ALL ASSOCIATED CIRCUITS TO RELEASE.
2	9	FS/ NTFS KEY	FRAME SELECTION/NO TEST FRAME SELECTION PERMITS SELECTION OF A PARTICULAR TRUNK LINK FRAME UNDER CONTROL OF THE FG(0-2) KEYS AND FS(0-9) KEYS OR SWITCH, WITH FS KEY OR WITHOUT NTFS KEY, FIRST TESTING FOR IDLE TRUNKS ON THAT TRUN LINK FRAME.
2	U	FG (0,1) KEY	TRUNK LINK FRAME GROUP USED IN CONJUNCTION WITH THE FS(0-9) KEYS OR SWITCH WHEN THE FS OR NTFS KEYS ARE OPERATED. INDICATES TENS DIGIT OF TRUNK LINK FRAME NUMBER.
	79	FG (0-2) KEY	
	80	FG (1,2) KEY	FOR FRAME GROUP 0, THE FG KEY SHOULD BE IN THE NORMAL POSITION.
2	U, 79	FS (0-9) KEY	TRUNK LINK FRAME UNITS WITH FS KEY OPERATED, MAKES ALL TRUNK LINK FRAMES EXCEPT THAT CORESSPONDING TO THE OPERATED FS(0-9) ON FG(0-2) KEYS LOOK BUSY.
	80	FS SW (0-9)	
2	9	TS/ NTTS KEY	TRUNK SELECTION/NO TEST TRUNK SELECTION MAKES ALL TRUNKS EXCEPT THE ONE CORRESPONDING TO THE OPERATED TS(0-19) KEYS OR SWITCH LOOK BUSY TO THE MARKER AND IF NTTS KEY IS OPERATED, WILL OPERATE THE TST RELAY IN THE TLF WHICH REMOVES THE PLUGGED-BUSY CONDITION FROM ALL TRUNKS ON THAT TRUNK LINK FRAME.
2	9,KX	TS (0-19) KEY	TRUNK SELECTION MAKES ALL TRUNKS EXCEPT ONE CORRESPONDING TO THE OPERATED TS(0-9) KEY LOOK BUSY TO THE MARKER.
	9,JF	TSU SW (0-9)	TRUNK SELECTION UNITS SAME AS (TS0-19) KEY.
		TSTI KEY	TRUNK SELECTION TENS OPERATED WITH TSU SWITCH SELECTS PARTICULAR TRUNK.
2	10	STP1/ STP2 KEY	JUNCTOR SEQUENCE STEP WITH STP1 KEY OPERATED, ALLOWS MARKER TO MAKE CHANNEL SELECTION IN JUNCTOR GROUP STEP 1, BUT IF NO CHANNEL IS AVAILABLE AND MARKER ADVANCES TO STEP 2, MAKES ALL CHANNELS LOOK BUSY. WITH STP2 KEY OPERATED, MAKES ALL CHANNELS LOOK BUSY IN JUNCTOR GROUP STEP 1, CAUSING MARKER TO ADVANCE TO STEP 2 WHERE IT IS ALLOWED TO MAKE CHANNEL SELECTION.
2	10, FS, FT	CH (0-9) KEY	CHANNEL BLANKS OUT ALL BUT THE DESIRED CHANNEL.
	10, EA	CH SW (0-9)	

ISSUE 4

SFD-10-01-B710

DIAL TONE CLASS OF TEST

PRINTED IN U.S.A.

DWG SIZE 6S

BELL TELEPHONE LABORATORIES INCORPORATED

E-74681-L (4-72)

SFD-10-01-B710

SD-25800-01

*SEE NOTE	FIG.OR OPT	KEY OR SWITCH	FUNCTION
2	9,QE	RA (0-3) KEY	ROUTE ADVANCE ALLOWS THE MARKER TO FIND AN IDLE TRUNK ONLY AFTER IT HAS ROUTE ADVANCED EXACTLY THE NUMBER OF TIMES CORRESPONDING TO KEY OR SWITCH SETTING.
	9,QF	RA SW (0-5)	
	9,IB	RA SW (0-11)	
	9,CG	RAU SW (0-9)	
	9/99, DL	RATI KEY	
2	10, KX	JSQ (0-5) KEY	JUNCTOR SEQUENCE RESETS THE JUNCTOR SEQUENCE WALKING RELAYS OF THE MARKER TO A DESIRED WALKING POSITION. REFER TO B708 FOR SETTINGS.
	10, JF	JSQ (0-5) SW	
3	1	REC KEY	RECORD CAUSES MARKER TO REQUEST A TROUBLE RECORD OF THE TEST CALL BEFORE RELEASING.
3	14	NTC KEY	NO TEST CONNECTOR CAUSES THE MARKER TO USE A NO TEST VERTICAL AS THE ORIGINATING LINE FOR THE TEST.
2	50	RT(0-3) KEY	ORIGINATING REGISTER GROUP SIGNALS THE MARKER TO ESTABLISH A CONNECTION TO A PARTICULAR REGISTER GROUP.
	124	RG SW (RT0/RT1/ RT2/RT3/ VP0/VP1/ VP2)	
3	7,WR	HTR/ TC KEY	HEAVY TRAFFIC/TEST CONTINUITY. HTR SIGNALS MARKER TO FUNCTION ON A HEAVY TRAFFIC BASIS. WITH TC KEY OPERATED, APPLIES A POSITIVE POLARITY AS THE DC COMPONENT OF THE CURRENT FLOW TEST OF THE MARKER CONTINUITY FEATURE. KEY NORMAL, APPLIES A NEGATIVE DC COMPONENT.
3	15, ZL	TCT KEY	TEST CONTINUITY TUBE CONTROLS THE TEST APPLIED TO THE MARKER VACUUM TUBES IN THE CONTINUITY TEST FEATURE SO THAT THIS MAY BE LIMITED AS TO RINGING VOLTAGE.
	15, ZM	LGT KEY	LOOP GROUND TEST KEY NORMAL, CAUSES GROUND TEST TO BE APPLIED TO THE TIP. LGT KEY OPERATED, CAUSES GROUND TESTS TO BE APPLIED BY LOOPING THE TIP AND RING.
3	15	CON/ RV KEY	CONTINUITY/REVERSE CON KEY OPERATED, APPLIES A LOOP CONTINUITY TEST TO THE MARKER CON TUBE. WITH THE RV KEY OPERATED, TRANSFERS THE CONTINUITY TEST FEATURE FROM THE RING TO THE TIP.
3	129, ZQY, ZQO	OBS KEY	OBSERVED GROUNDS THE OBST LEAD INSTEAD OF NOBT TO SIMULATE AN ORIGINATING REGISTER ON AN OBSERVED CALL.
3	15	FCG KEY	FALSE CROSS AND GROUND APPLIES AN OPERATE TEST TO THE MARKER FCG RELAY.
3	15	LB/ XLH KEY	LINE BUSY/CROSSED LINE HOLD MAGNET WITH LB KEY OPERATED, MAKES ANY LINE APPEAR BUSY TO MARKER BY CAUSING THE LHMT LEAD TO BE GROUNDED UPON RECEIVING A GROUND FROM THE MARKER ON THE HGK LEAD. XLH KEY OPERATED, SHUNTS THE LHM RELAY WITH 3000-OHMS TO SIMULATE A CONDITION SIMILAR TO CROSSED-LINE HOLD MAGNETS
3	1, ZWB, ZWC	TR2/ TRS KEY	SECOND TRIAL/TRANSFER START WITH KEY NORMAL, SIGNALS MARKER TO FUNCTION ON A FIRST TRIAL BASIS. WHEN OPERATED, TR2 KEY SIGNALS MARKER TO FUNCTION ON SECOND TRIAL BASIS. TRS KEY OPERATED, SIGNALS THE MARKER THAT THERE WAS A CONNECTOR START TRANSFER.
3	9	AN KEY	OVERLOAD ANNOUNCEMENT OPERATED WITH RA KEY OR RAU SWITCH AND ENABLES THE DIAL TONE MARKER TO RECYCLE AND SET UP THE CALL TO AN OVERLOAD ANNOUNCEMENT TRUNK.
3	4	P&LO KEY	PREFERENCE AND LOCKOUT TESTS THE PREFERENCE AND LOCKOUT FEATURE OF DTM BY PROVIDING DOUBLE LINE LOCATION INFORMATION.

* SEE SHEET B710 FOR SHEET NOTES

ISSUE 4

DIAL TONE CLASS OF TEST

SFD-10-01-B711

BELL TELEPHONE LABORATORIES INCORPORATED

DWG SIZE 6S

PRINTED IN U.S.A.

SFD-10-01-B711

K-7481 (10-71)

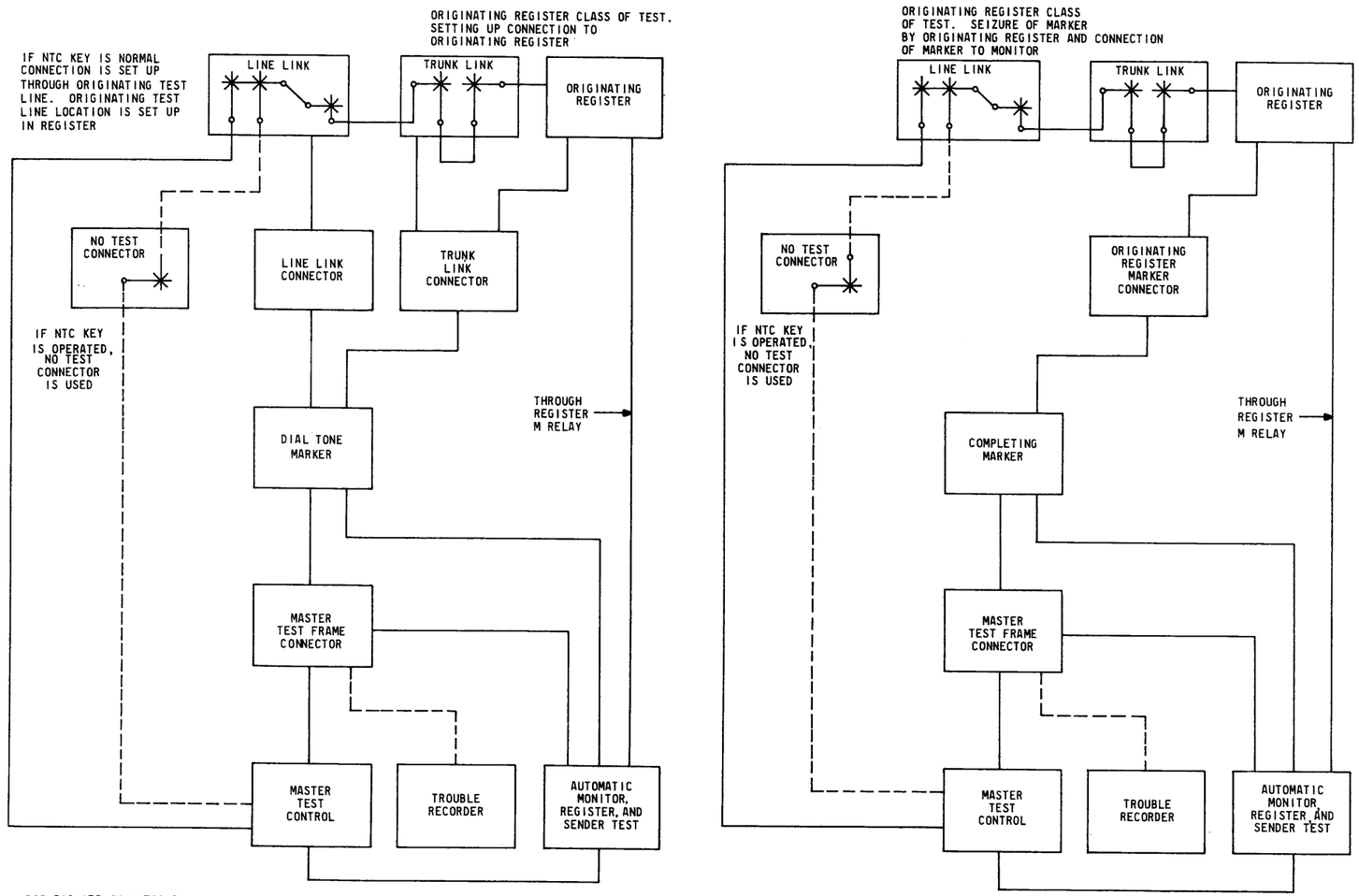

BSP-218-135-501, ISS 8
SD-25800-01, MASTER TEST CONTROL CKT
SD-25680-01, AUTOMATIC MONITOR REGISTER AND SENDER TEST CKT.

SHEET NOTES:

1. KEY(S) OR SWITCH(ES) THAT MUST BE OPERATED TO PERFORM THIS CLASS OF TEST.
2. KEY(S) OR SWITCH(ES) USED TO SIMULATE TROUBLE RECORD (SEE SFD-B702/B704/B706).
3. KEY(S) OR SWITCH(ES) WHICH MAY BE OPERATED TO CAUSE ADDITIONAL ACTIONS OR TEST VARIATIONS FOR THIS PARTICULAR TEST.
4. KEY(S) OR SWITCH(ES) LOCATED ON AMRST PANEL.

SD-25800-01

SEE NOTE	FIG. OR OPT	KEY OR SWITCH	FUNCTION
1	67	OR KEY	ORIGINATING REGISTER CLASS OF TEST CALL ALLOWS ESTABLISHING A TEST CONNECTION FROM AN ORIGINATING REGISTER TO THE AUTOMATIC MONITOR AS ILLUSTRATED BY DIAGRAM.
	74	TSTA SW (OR)	
1,2	11,NQ	CL SW (OR-DP/MF)(FAC-DP/MF)	ORIGINATING/FOREIGN AREA CLASS WITH THE CL SWITCH OPERATED TO OR-DP/MF, INDICATES A HOME OFFICE CODE. WITH THE CL SWITCH OPERATED TO FAC-DP/MF, INDICATES A FOREIGN AREA CODE.
1,2	11,NQ	TRNA SW (LT/LT1/LT2/LT3/2DT/X11/11/FVD)	TRANSLATOR CLASS OPERATE AS REQUIRED TO PRIME MARKER WITH NECESSARY ORIGINATING TRANSLATION FOR SELECTED ROUTE.
1,2	19,21	MT (0-11) KEY	MARKER TEST DIRECTS THE MTFC TO CONNECT THIS TEST CIRCUIT (MTC) TO THE MARKER CORRESPONDING TO THE NUMBER OPERATED.
	52	MT SW (0-11)	
	81	MTU SW (0-9)	
		MTTI KEY	
1,2	4,KX	A-C (0-9) KEY	CALLED DIGITS (A-C) PRIMES THE MARKER WITH A THREE DIGIT AREA CODE OR THREE DIGIT OFFICE CODE.
	4,KZL, ZVM	A-C SW (0-9)	
1,2	4,KX	D(0-9) KEY	CALLED DIGITS (D-K) PRIMES THE MARKER WITH THE CALLED DIGITS.
	4,KY	E(0-9) KEY	
	4,KZ	F(0-9) KEY	
	4,JA	G(0-9) KEY	
	4,JB	H(0-9) KEY	
	4,JC	J(0-9) KEY	
	4,JD	K(0-9) KEY	ON OTHER THAN LOCAL CALLS SEE PREFIX DIGIT KEYS AND SWITCHES ON SHEET B713.
	4,ZVL, ZVM	D-K SW (0-9)	
1,2	1,G	MF/MLF KEY (OPR/N-OPR)	ORIGINATING REGISTER GROUP. WHEN THE LLF SERVES ONLY MULTIFREQUENCY ORIGINATING REGISTERS OPERATE TO MF. IF LLF SERVES BOTH MULTIFREQUENCY AND DIAL PULSE ORIGINATING REGISTERS OPERATE TO MLF.
	124	RG SW (DP/MF/MLF)	FOR LLF SERVING DP ORIGINATING REGISTERS MF/MLF KEY SHOULD BE NORMAL OR RG SW OPERATED TO DP
1,4		SURGE KEY	SURGE PROVIDES FOR TESTING THE DIAL REGISTER PULSING CIRCUITS ON A SURGE HOLD CONDITION.(DP REGISTERS)
		PB KEY	"TOUCH-TONE" PREPARES THE "TOUCH-TONE" OSCILLATOR FOR PULSING. (MF REGISTERS)
1,4		STT KEY	START TEST OPERATED TO CONDITION THE CIRCUIT FOR THE START OF TESTING.
1	1	ST/RL	START AND RELEASE OPERATED TO ST INITIATES A TEST CALL. OPERATED TO RL CAUSES TEST CALL AND ALL ASSOCIATED CIRCUITS TO RELEASE.

ISSUE 4

SFD-10-01-B712

ORIGINATING REGISTER (OR) CLASS OF TEST

PRINTED IN U.S.A.

DWG SIZE 6S

BELL TELEPHONE LABORATORIES INCORPORATED

SFD-10-01-B712

SD-25800-01

*SEE NOTE	FIG.OR OPT	KEY OR SWITCH	FUNCTION
3,4		7PPS MIN KEY	7 PLUSES PER SECOND MINIMUM PER CENT BREAK INTERRUPTER.
3,4		7PPS MAX KEY	7 PULSES PER SECOND MAXIMUM PER CENT BREAK INTERRUPTER.
3,4		15PPS MIN KEY	15 PULSES PER SECOND MINIMUM PER CENT BREAK INTERRUPTER.
3,4		15PPS MAX KEY	15 PULSES PER SECOND MAXIMUM PER CENT BREAK INTERRUPTER.
3,4		24PPS MIN KEY	24 PULSES PER SECOND MINIMUM PER CENT BREAK INTERRUPTER.
3,4		24PPS MAX KEY	24 PULSES PER SECOND MAXIMUM PER CENT BREAK INTERRUPTER.
2	9	FS/ NTFS KEY	FRAME SELECTION/NO TEST FRAME SELECTION PERMITS SELECTION OF A PARTICULAR TRUNK LINK FRAME UNDER CONTROL OF THE FG(0-2) KEYS AND FS(0-9) KEYS OR SWITCH, WITH (FS KEY) OR WITHOUT (NTFS KEY), FIRST TESTING FOR IDLE TRUNKS ON THAT TRUNK LINK FRAME.
2	U	FG (0,1) KEY	TRUNK LINK FRAME GROUP USED IN CONJUNCTION WITH THE FS(0-9) KEYS OR SWITCH WHEN THE FS OR NTFS KEYS ARE OPERATED. INDICATES TENS DIGIT OF TRUNK LINK FRAME NUMBER.
	79	FG (0-2) KEY	
	80	FG (1,2) KEY	FOR FRAME GROUP 0, THE FG KEY SHOULD BE IN THE NORMAL POSITION.
2	U, 79	FS (0-9) KEY	TRUNK LINK FRAME UNITS WITH FS KEY OPERATED, MAKES ALL TRUNK LINK FRAMES EXCEPT THAT CORRESPONDING TO THE OPERATED FS(0-9) ON FG(0-2) KEYS LOOK BUSY.
	80	FS SW (0-9)	
2	9	TS/ NTTS KEY	TRUNK SELECTION/NO TEST TRUNK SELECTION MAKES ALL TRUNKS EXCEPT THE ONE CORRESPONDING TO THE OPERATED TS(0-19) KEYS OR SWITCH LOOK BUSY TO THE MARKER AND IF NTTS KEY IS OPERATED, WILL OPERATE THE "TST" RELAY IN THE TLF WHICH REMOVES THE PLUGGED-BUSY CONDITION FROM ALL TRUNKS ON THAT TRUNK LINK FRAME.
2	9,KX	TS (0-19) KEY	TRUNK SELECTION MAKES ALL TRUNKS EXCEPT ONE CORRESPONDING TO THE OPERATED TS(0-9) KEY LOOK BUSY TO THE MARKER.
	9,JF	TSU SW (0-9)	TRUNK SELECTION UNITS SAME AS (TS0-19) KEY.
		TSTI KEY	TRUNK SELECTION TENS OPERATED WITH TSU SWITCH SELECTS PARTICULAR TRUNK.
2	FIG. S	FT (0-3) KEY	FRAME TENS OPERATED TO TRANSMIT THE LINE LINK FRAME TENS DIGIT TO THE MARKER.
	FIG. T	FT (0-5) KEY	
	78	FT SW (0-5)	
2	6,KX	FU (0-9) KEY	FRAME UNITS OPERATED TO TRANSMIT THE LINE LINK FRAME UNITS DIGIT TO THE MARKER.
	6,ZWP, ZWQ	FU SW (0-9)	
2	6,KX	VG (0-9) KEY	VERTICAL GROUP OPERATED TO TRANSMIT THE VERTICAL GROUP TO THE MARKER.
	6,ZF	VG (10-13) KEY	
	6,JF	VGU SW (0-9)	
		VGTI KEY	
2	6,KX	HG (0-9) KEY	HORIZONTAL GROUP OPERATED TO TRANSMIT THE HORIZONTAL GROUP TO THE MARKER.
	6,JF	HG SW (0-9)	

* SEE SHEET B712 FOR SHEET NOTES

SD-25800-01

*SEE NOTE	FIG.OR OPT	KEY OR SWITCH	FUNCTION
2	6,RD	VF (0-4) KEY	VERTICAL FILE OPERATED TO TRANSMIT THE VERTICAL FILE TO THE MARKER.
	6,JF	VF SW (0-4)	
2	7,XA, XB,ZG	CST (0-2) KEY	CLASS OF SERVICE TENS CONTROLS THE CLASS-OF-SERVICE TENS DIGIT TRANSMITTED TO THE MARKER.
	7,XB	CST (0-9) KEY	
	7,JF	CST SW (0-9)	
2	7,JH, RY	CSU (0-9) KEY	CLASS OF SERVICE UNITS CONTROLS THE CLASS-OF-SERVICE UNITS DIGIT TRANSMITTED TO THE MARKER.
	7,JF	CSU SW (0-9)	
2	37, GC,GD	CGB KEY (OPR/N-OPR)	CLASS GROUP B USED WHEN OFFICE HAS A MAXIMUM OF 60 CLASSES OF SERVICE. SELECTS CLASS GROUP A WITH KEY IN NORMAL POSITION.
		NONE	
2	7,JI	CRU (0-9) KEY	CUSTOMER RATE TREATMENT UNITS PROVIDES RATE TREATMENT INFORMATION TO MARKER.
	7,JF	CRU SW (0-9)	
		NONE	NO RATE TREATMENT REQUIRED.
2	7,ED	CSGA/ CSGB KEY	RATE TREATMENT GROUP A AND B CONTROLS THE RATE TREATMENT GROUP INDICATION TO MARKER.
		NONE	NO RATE TREATMENT REQUIRED.
3	14	NTC KEY	NO TEST CONNECTOR CAUSES THE MARKER TO USE A NO TEST VERTICAL AS THE ORIGINATING LINE FOR THE TEST.
3	1	REC KEY	RECORD CAUSES THE MARKER TO REQUEST A TROUBLE RECORD OF THE TEST CALL BEFORE IT RELEASES.
3	3	REP KEY	REPEAT KEY CAUSES A TEST CALL TO A REGISTER TO BE REPEATED AFTER SUCCESSFUL CHECK BY THE AUTOMATIC MONITOR.
3,4		TA KEY	TIME ALARM PROVIDES CANCELING OF TIMING ON TEST CALLS.
3,4		ACO KEY	ALARM CUTOFF PROVIDES FOR RETIRING THE ALARM.
3,4		QTR KEY	QUICK TROUBLE RECORD PROVIDES FOR A TROUBLE RECORD PRIOR TO TIME OUT ON REGISTER TEST CALLS WHICH HAVE ADVANCED TO CLASS CHECK.
3,4		SER KEY	SERVICE ALLOWS ORIGINATING REGISTER TO BE CHECKED ON SERVICE CODES.
3,4		MAN KEY	MANUAL TESTS THE OPERATION OF ORIGINATING REGISTERS WITH MANUAL LINES.
3,4		ZRO KEY	ZERO KEY ALLOWS TESTING REGISTERS ON ZERO OPERATOR CODES.
3,4		CN KEY	COIN ALLOWS TESTING COIN FEATURES OF REGISTER.
3,4		CNTT KEY	COIN TONE TEST PROVIDES FOR TESTING THAT THE ORIGINATING REGISTER (DIAL TONE FIRST) PROVIDES A TONE WHEN NO COIN IS PRESENT.
3,4		CTAB KEY	COIN TEST ABANDON CHECKS THAT THE OR CAN ABANDON THE CALL DURING A COIN TEST.
3,4		CR4 KEY	COIN RETURN CHECKS THAT AN OR WILL RETURN THE COIN ON A SIGNAL FROM THE MARKER.
3,4		ORH KEY	ORIGINATING REGISTER HOLD CHECKS THAT THE OR LOCKS TO THE MARKER CONNECTION.
3,4		RSC KEY	REGISTER STUCK COIN TESTS THE OR OPERATION ON A STUCK COIN.
3,4		MOTL KEY	MONITOR ORIGINATING TEST LINE ALLOWS LISTENING ON TEST CALL.
3,4		RPS KEY	REGISTER PERMANENT SIGNAL PROVIDES FOR MARKING PERMANENT SIGNAL OR TIMEOUT TESTS.

SD-25800-01

*SEE NOTE	FIG.OR OPT	KEY OR SWITCH	FUNCTION
3,4		RPF KEY	RING PARTY FIRST FAILURE PROVIDES FOR TESTING THE FIRST AND SECOND PARTY TEST FEATURE.
3,4		RRP KEY	REGISTER RING PARTY PROVIDES FOR TESTING THE OPERATION OF THE ORIGINATING REGISTER ON RING PARTY LINES.
3,4		RTP KEY	REGISTER TIP PARTY PROVIDES FOR TESTING THE OPERATION OF THE ORIGINATING REGISTER ON TIP PARTY LINES.
3,4		TPF KEY	TIP PARTY FIRST FAILURE PROVIDES FOR TESTING THE ORIGINATING REGISTER FIRST AND SECOND PARTY TEST FEATURE.
3,4		RBT KEY	REGISTER BUSY TEST PROVIDES FOR TESTING THE OPERATION OF THE ORIGINATING REGISTER ON A BT SIGNAL FROM THE MARKER.
3,4		RPD KEY	REGISTER PARTIAL DIAL PROVIDES FOR TESTING THE ORIGINATING REGISTER ON A PARTIAL DIAL CALL.
3,4		RAB KEY	REGISTER ABANDON PROVIDES FOR TESTING ABANDON CALLS.
3,4		STD KEY	STATION DELAY TESTS THE STATION DELAY FEATURE OF THE OR.
3,4		PD SW (0)	PREFIX DIGITS OPERATE TO FURNISH PREFIX DIGIT TO THE AUTOMATIC MONITOR. DIGIT 0
3	116	BPU SW (0)	
3,4		PD SW (1)	DIGIT 1
3	116	API KEY (1)	
3,4		PD SW (8)	DIGIT 8
3	116	APU SW (8)	
3,4		PD SW (9)	DIGIT 9
3	116	APU SW (9)	
3,4		PD SW (01)	DIGIT 01
3	116	APU,BPU SW (01)	
3,4		PD SW (11)	DIGIT 11
3	116	API,BPI KEY (11)	
3,4		PD SW (90)	DIGIT 90
3	116	APU,BPU SW (90)	
3,4		PD SW (91)	DIGIT 91
3	116	APU,BPU SW (91)	
3,4		PD SW (011)	DIGIT 011
3	116	APU,BPU, CPU SW (011)	
3,4		PD SW (811)	DIGIT 811
3	116	APU,BPU, CPU SW (811)	
3,4		PD SW (911)	DIGIT 911
3	116	APU,BPU, CPU SW (911)	

ISSUE 3

ORIGINATING REGISTER CLASS OF TEST -

SFD-10-01-B713

BELL TELEPHONE LABORATORIES INCORPORATED

DWG SIZE 6S

PRINTED IN U.S.A.

SFD-10-01-B713

E-7421 (10-71)

DOUBLE SIDED 2/X TROUBLE RECORD CARD (E-5488)					KEY(S) OR SWITCH(ES) USED TO SIMULATE TROUBLE RECORD			
FUNCTION		SEE NOTE	DESIGNATION PERFORATED	LOCATION ON CARD	KEY DESIGNATION	SWITCH		KEY DESIGNATION
						DESIGNATION	POSITION	
			TURN OVER	S8,42				
TYPE OF CALL					PTT	TSTA	PTT	
PRETRANSLATOR			PRT	S8,20	MT(0-2)			
	TENS		DRTO	S7,42				
	UNITS		DR(0-2)	S8,44,50,51		MTU	0-2	
TRANSLATOR CLASS	LT		LT	S3,00		TRNA	LT	
	II		II	S3,10	II		II	
CALLED DIGITS			A-C(0-9)	S1,00-24	A-C(0-9)	A-C	0-9	

ISSUE 3

SFD-10-01-B714

SIMULATION OF PRETRANSLATION CALLS WHICH PRODUCE 2/X DOUBLE SIDED TROUBLE RECORD CARDS (E5488)

PRINTED IN U.S.A.

FORM SIZE 6S

BELL TELEPHONE LABORATORIES INCORPORATED

CBL-266(10-75)

SFD-10-01-B714

PRETRANSLATION
2/X DOUBLE SIDED TROUBLE CARD

FRONT

E-5488 (11-71F)

NO. 5 XBR SYS TBL RCDR CARD	
TROUBLE INDICATION	
TROUBLE LOCATION	2TR
TROUBLE FOUND OR ACTION TAKEN	
CLRD BY	TIME RECD / DATE
	TIME CLRD / DATE
CLASS REPORT	TROUBLE CODE
TICKET NO.	
FOR DESCRIPTION SEE CD-27718-01	

MONTH
YEAR
OFFICE

MADE IN U.S.A.

BACK

E-5488 (11-71 B)

NO. 5 XBR SYS TBL RCDR CARD	
TROUBLE INDICATION	
TROUBLE LOCATION	2TR
TROUBLE FOUND OR ACTION TAKEN	
CLEARED BY	TIME RECD / DATE
	TIME CLRD / DATE
CLASS REPORT	TROUBLE CODE
TICKET NO.	
FOR DESCRIPTION SEE CD-27718-01	

MONTH
YEAR
OFFICE

MADE IN U.S.A.

MISCELLANEOUS

INPUT TO PRETRANSLATOR

CIRCUITS OR PATHS USED

OUTPUT FROM PRETRANSLATOR TO ORIGINATING REGISTER

PROGRESS AND TROUBLE INDICATIONS

DESIGNATIONS WHICH MAY BE PERFORATED UNDER SPECIAL CONDITIONS

ISSUE 3

NO. 5 XBR 2/X DOUBLE SIDED TROUBLE RECORD CARD (E5488) INDICATING DESIGNATIONS WHICH MAY BE PERFORATED ON A PRETRANSLATION TROUBLE RECORD CARD

BELL TELEPHONE LABORATORIES INCORPORATED

DWG SIZE 6S

SFD-10-01-B715

PRINTED IN U.S.A.

SFD-10-01-B715
7 SHEETS, SHEET 1

E-7481 (10-71)

DOUBLE SIDED I/X TROUBLE RECORD CARD (E-4393)					KEY(S) OR SWITCH(ES) USED TO SIMULATE TROUBLE RECORD			
FUNCTION		SEE NOTE	DESIGNATION PERORATED	LOCATION ON CARD	KEY DESIGNATION	SWITCH		KEY DESIGNATION
						DESIGNATION	POSITION	
TYPE OF CALL					PTT	TSTA	PTT	
PRETRANSLATOR	TENS		PRT	S8,24	MT(0-2)			
			DRTO	S8,54				
	UNITS		DR(0-2)	S8,34,40,41		MTU	0-2	
TRANSLATOR CLASS	LT		LT	S3,00		TRNA	LT	
	II		II	S3,10	II		II	
CALLED DIGITS			A-C(0-9)	S1,00-24	A-C(0-9)	A-C	0-9	

ISSUE 3

SFD-10-01-B716

SIMULATION OF PRETRANSLATION CALLS WHICH PRODUCED I/X DOUBLE SIDED TROUBLE RECORD CARDS (E4393)

TYPE SIZE 6S

BELL TELEPHONE LABORATORIES INCORPORATED

PRINTED IN U. S. A.

CBL-266(10-75)

SFD-10-01-B716

PRETRANSLATION
I/X DOUBLE SIDED TROUBLE CARD

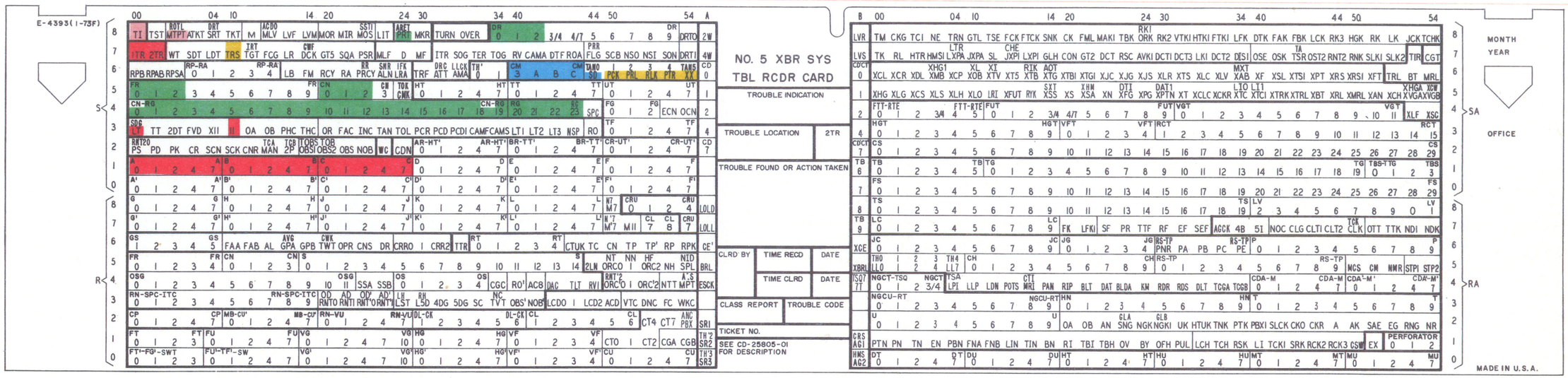

- MISCELLANEOUS
- INPUT TO PRETRANSLATOR
- CIRCUITS OR PATHS USED
- OUTPUT FROM PRETRANSLATOR TO ORIGINATING REGISTER
- PROGRESS AND TROUBLE INDICATIONS
- DESIGNATIONS WHICH MAY BE PERFORATED UNDER VARIOUS CONDITIONS

ISSUE 3

NO. 5 XBR I/X DOUBLE SIDED TROUBLE RECORD CARD (E4393) INDICATING DESIGNATIONS WHICH MAY BE PERFORATED ON A PRETRANSLATION TROUBLE RECORD CARD -

BELL TELEPHONE LABORATORIES INCORPORATED

DWG SIZE 6S

SFD-10-01-B717

PRINTED IN U.S.A.

SFD-10-01-B717
7 SHEETS, SHEET 1

E-7421 (10-71)

SINGLE SIDED I/X TROUBLE RECORD CARD (E-3638)					KEY(S) OR SWITCH(ES) USED TO SUMULATE TROUBLE RECORD			
FUNCTION		SEE NOTE	DESIGNATION PERFORATED	LOCATION ON CARD	KEY DESIGNATION	SWITCH		KEY DESIGNATION
						DESIGNATION	POSITION	
TYPE OF CALL					PTT	TSTA	PTT	
PRETRANSLATOR			PRT	S8,14	MT(0-2)			
	TENS 0		DRTO	S7,19				
	UNITS		DR(0-2)	S8,19-21		MTU	0-2	
TRANSLATOR CLASS	LT		LT	S4,0		TRNA	LT	
	II		II	S4,4	II		II	
CALLED DIGITS			A-C(0-9)	S0,0-14	A-C(0-9)	A-C	0-9	

ISSUE 3

SFD-10-01-B718

SIMULATION OF PRETRANSLATION CALLS WHICH PRODUCE I/X SINGLE SIDED TROUBLE RECORD CARD (E3638)

DWG SIZE 6S

BELL TELEPHONE LABORATORIES INCORPORATED

PRINTED IN U. S. A.

CBL-266(10-75)

SFD-10-01-B718

PRETRANSLATION
I/X SINGLE SIDED TROUBLE CARD

E-3638 (11-71)

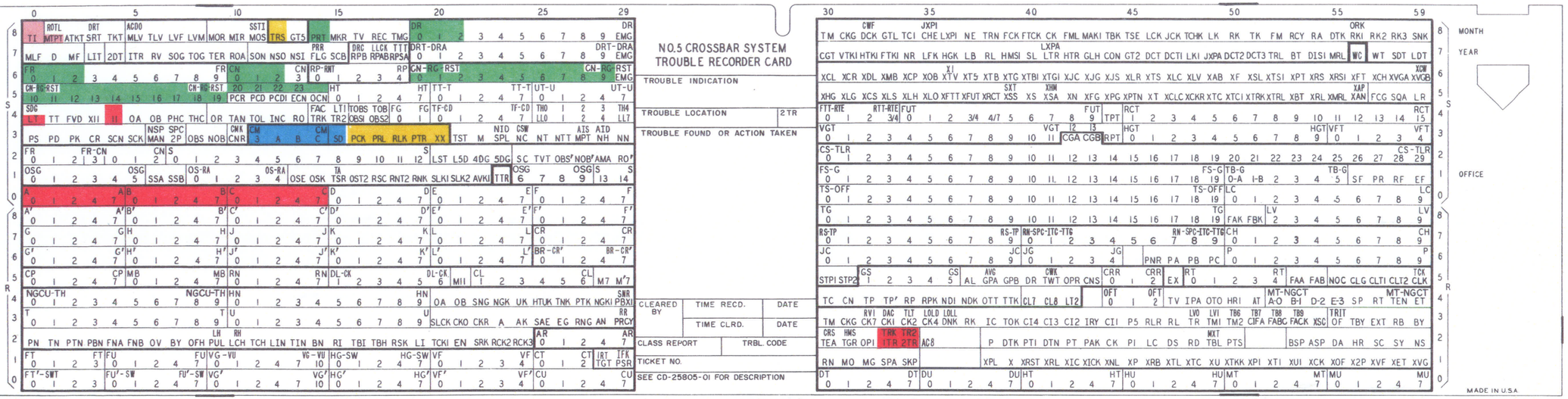

MISCELLANEOUS

INPUT TO PRETRANSLATOR

CIRCUITS OR PATHS USED

OUTPUT FROM PRETRANSLATOR TO ORIGINATING REGISTER

PROGRESS AND TROUBLE INDICATIONS

DESIGNATIONS WHICH MAY BE PERFORATED UNDER VARIOUS CONDITIONS

ISSUE 3

NO. 5 XBR I/X SINGLE SIDED TROUBLE RECORD CARD (E3638) INDICATING DESIGNATIONS WHICH MAY BE PERFORATED ON A PRETRANSLATION TROUBLE RECORD CARD -

SFD-10-01-B719

BELL TELEPHONE LABORATORIES INCORPORATED

DWG SIZE 6S

PRINTED IN U. S. A.

SFD-10-01-B719
7 SHEETS, SHEET 1

E-7481 (10-71)

AUTOMATIC TROUBLE ANALYSIS EXCEPTION REPORT				KEY(S) OR SWITCH(ES) USED TO SIMULATE TROUBLE RECORD			
FUNCTION		SEE NOTE	TTY OUTPUT	KEY DESIGNATION	SWITCH		KEY DESIGNATION
					DESIGNATION	POSITION	
TYPE OF CALL			PRT	PTT	TSTA	PTT	
PRETRANSLATOR	TENS O		PRT DR.X	MT(0-2)			
	UNITS				MTU	0-2	
TRANSLATOR CLASS	LT		LT		TRNA	LT	
	II		II	II		II	
CALLED DIGITS			DIG.XXX	A-C(0-9)	A-C	0-9	

ISSUE 3

SFD-10-01-B720

SIMULATION OF PRETRANSLATION CALLS WHICH PRODUCE AN AUTOMATIC TROUBLE ANALYSIS EXCEPTION REPORT

PRINTED IN U. S. A.

OVER SIZE 6S

BELL TELEPHONE LABORATORIES INCORPORATED

B-24811-L (4-72)

SFD-10-01-B720

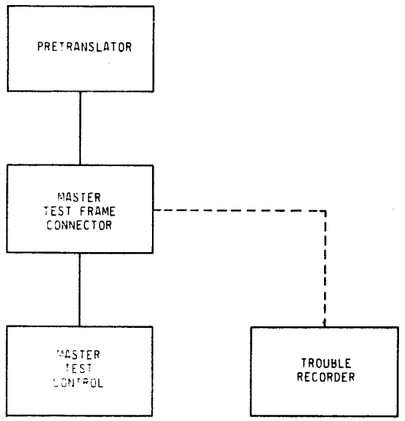

SD-25800-01, MASTER TEST CONTROL CIRCUIT (MTC)
BSP 218-130-501, ISS 3

SHEET NOTES:

1. KEY(S) OR SWITCH(ES) THAT MUST BE OPERATED TO PERFORM THIS CLASS OF TEST.
2. KEY(S) OR SWITCH(ES) USED TO SIMULATE TROUBLE RECORD (SEE SFD-B715/B717/B719).
3. KEY(S) OR SWITCH(ES) WHICH MAY BE OPERATED TO CAUSE ADDITIONAL ACTIONS OR TEST VARIATIONS FOR THIS PARTICULAR TEST.

SD-25800-01

SEE NOTE	FIG. OR OPT	KEY OR SWITCH	FUNCTION
1	72	PTT KEY	PRETRANSLATOR TEST PREPARES TEST CIRCUIT FOR MAKING TEST OF PRETRANSLATOR.
	74	TSTA SW (PTT)	
1,2	21	MT (0-2) KEY	PRETRANSLATOR SELECTION USED TO SELECT PARTICULAR PRETRANSLATOR TO BE TESTED.
	52	MT SW (0-2)	
	81	MTU SW (0-2)	
1,2	4,KX	A(0-9) B(0-9) C(0-9) KEYS	CALLED DIGITS USED TO PRIME PRETRANSLATOR WITH FIRST THREE DIGITS OF CALLED NUMBER.
	ZVM, KZL, 4	A-C SW (0-9)	
1,2	NP	11 KEY	TRANSLATOR CLASS OPERATE AS REQUIRED TO PRIME PRETRANSLATOR WITH NECESSARY ORIGINATING TRANSLATION FOR SELECTED ROUTE.
	NT, OW	LOC TRNSL (ALL KEYS NORMAL)	
	11,NQ	TRNA SW (LT/11)	
1	1	ST/RL KEY	START TEST USED TO INITIATE START OF TEST CALL. RELEASE CAUSES COMPLETE RELEASE OF TEST CALL FROM ALL CIRCUITS.
3	F	PRL/OT KEY	PRETRANSLATOR RELEASE USED TO CHECK PRT RELEASE WHEN THE BRL LEAD IS OPEN. OPEN TRANSMITTING LEAD IS USED TO SIMULATE AN OPEN TRANSMITTING LEAD IN THE PRT.
3	F	RLK/LK KEY	RELEASE CHECK SIMULATES OPEN RLK PRETRANSLATOR LEAD. LOCK CHECK SIMULATES AN OPEN LOCKING CIRCUIT FOR PRT CLASS RELAYS OF AN ORIGINATING REGISTER.
3	F	TR2/TRS KEY	SECOND TRIAL INDICATES PRETRANSLATOR IS BEING SEIZED ON A SECOND TRIAL BASIS. TRANSFER START SIGNALS THE PRT THAT A CONNECTOR TRANSFER START OCCURED.
3	F	PTR KEY	PRETRANSLATOR TROUBLE RELEASE FORCES TROUBLE CONDITION WHICH CAUSES THE PRETRANSLATOR TO USE ITS TROUBLE RELEASE LEAD (PTR) AND SIMULATES ON OPEN PTR LEAD OR AN OPEN WINDING ON THE PTR RELAY OF AN ORIGINATING REGISTER.

ISSUE 3

PRETRANSLATION CLASS OF TEST

SFD-10-01-B721

BELL TELEPHONE LABORATORIES INCORPORATED

DWG SIZE 6S

PRINTED IN U.S.A.

E-7481 (10-71)

SFD-10-01-B721

ESTABLISHING OUTGOING TRUNK CONNECTION

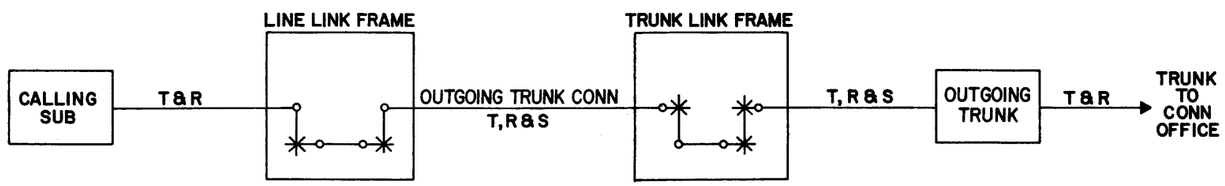

INDEX

CAUTION!

DUE TO THE SIMPLIFIED NATURE OF THIS DOCUMENT, INFORMATION SHOWN MAY NOT BE COMPLETE.

ISSUE 3

PART CO
SUBSCRIBER OUTGOING CALL
TROUBLE CARD ANALYSIS

SFD-10-01-C001

BELL TELEPHONE LABORATORIES INCORPORATED

SIZE 6S

PRINTED IN U.S.A.

SFD-10-01-C001

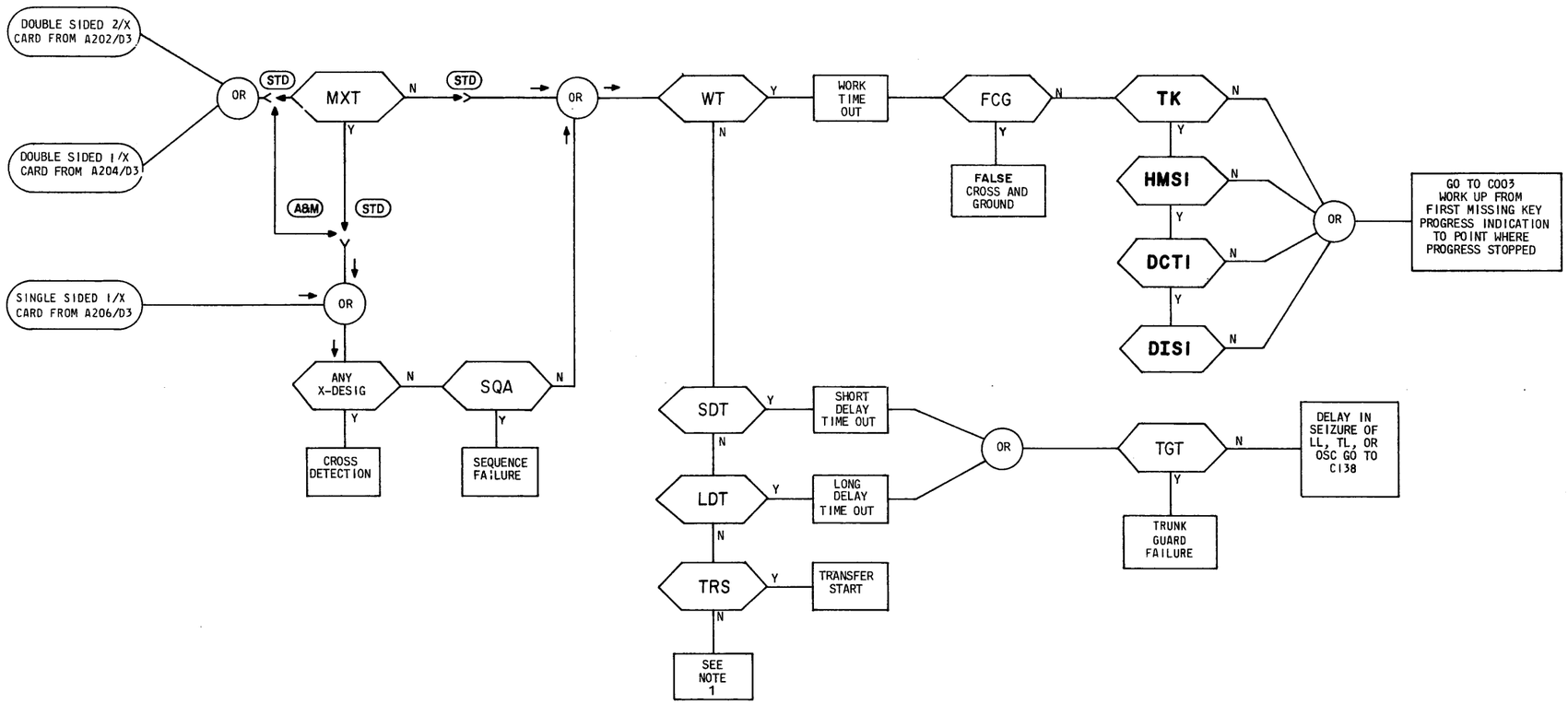

SHEET NOTES:

1. THERE ARE SEVERAL POSSIBILITIES OF OBTAINING A CARD WITH OR WITHOUT AN MXT PUNCH AND WITHOUT ANY X-, SQA, WT, SDT, LDT, OR TRS PUNCHES. THESE INCLUDE:

   A. A FALSELY OPERATED FTC- RELAY IN A NORMAL MARKER WILL OPERATE MXT RELAY CAUSING A TROUBLE RECORD CARD WITH NO X- OR SQA INDICATION. (ONLY DOUBLE SIDED CARDS WILL SHOW AN MXT PUNCH)

   B. A MOMENTARY CROSS IN THE JUNCTOR WALKING CIRCUIT WILL OPERATE MXT RELAY CAUSING A RECORD AS IN (A) ABOVE.

   C. THERE MAY BE MISSING PUNCHES, AS A RESULT OF A DEFECTIVE TROUBLE RECORDER OR DEFECTIVE WIRING OR RELAY CONTACTS IN LEADS TO TROUBLE RECORDER.

ISSUE 4

SFD-10-01-C002

FLOW CHART FOR ANALYSIS OF TROUBLE CARD FOR SUBSCRIBER OUTGOING CALL

DWG SIZE 6S

BELL TELEPHONE LABORATORIES INCORPORATED

PRINTED IN U.S.A.

SFD-10-01-C002

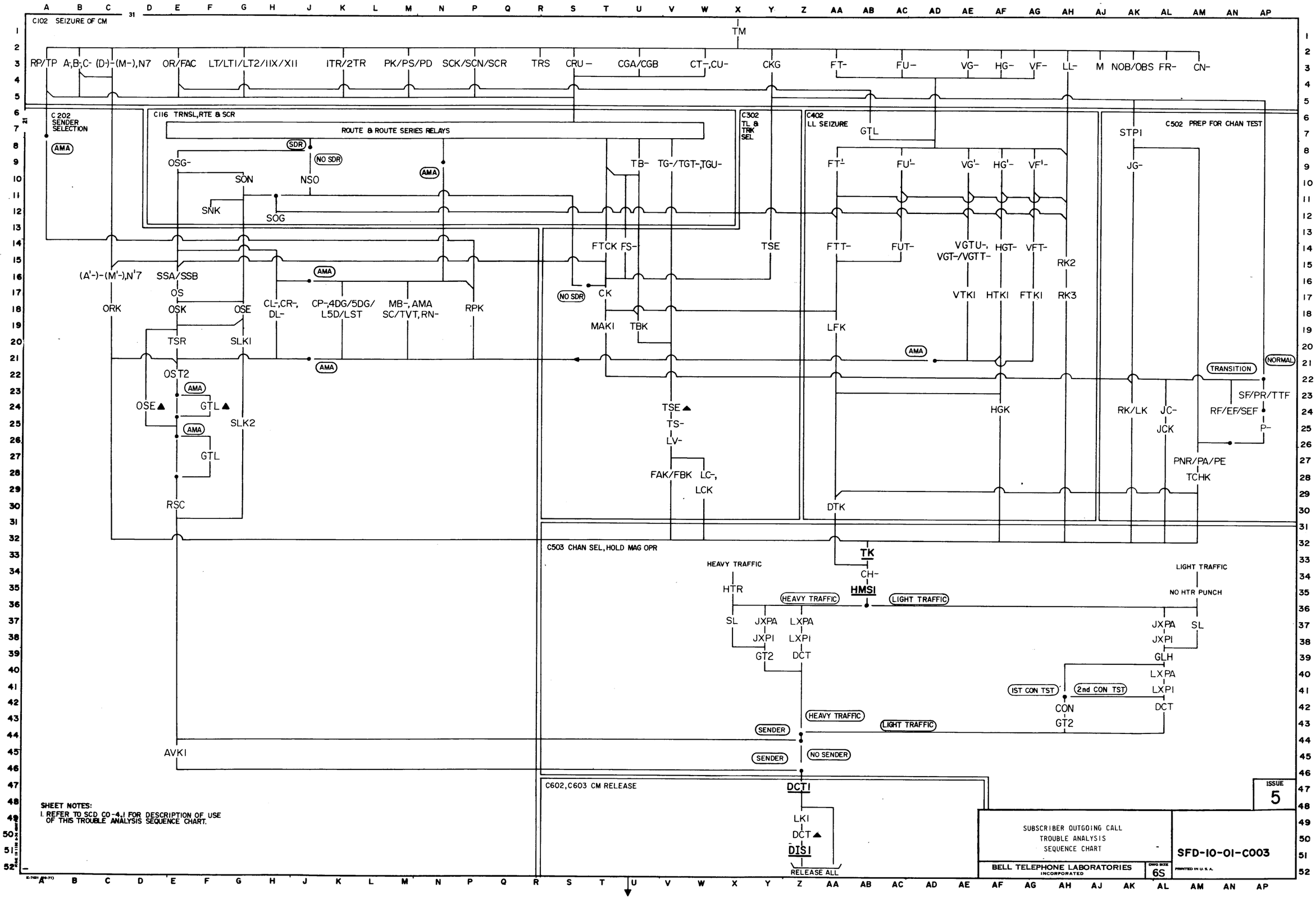

SHEET NOTES:
1. REFER TO SCD CO-4.1 FOR DESCRIPTION OF USE OF THIS TROUBLE ANALYSIS SEQUENCE CHART.

ESTABLISHING OUTGOING TRUNK CONNECTION

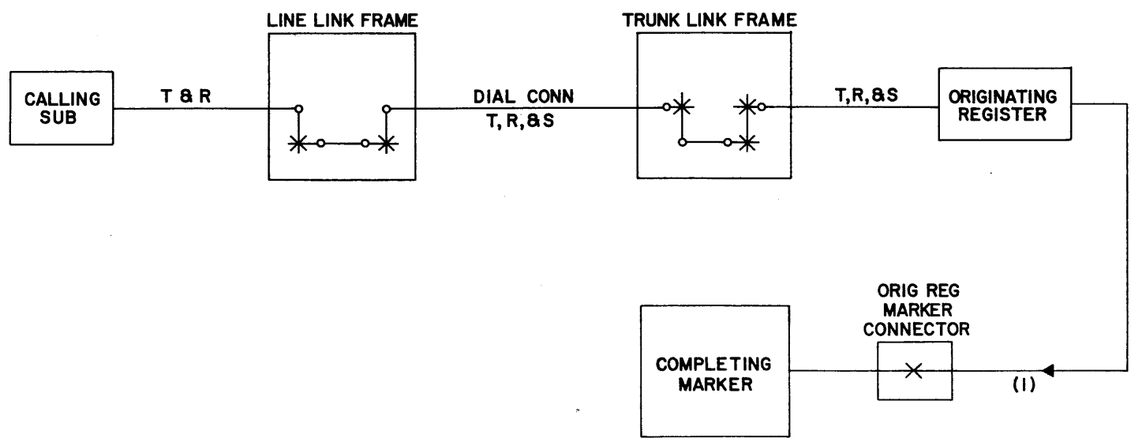

CAUTION !

DUE TO THE SIMPLIFIED NATURE OF THIS DOCUMENT, INFORMATION SHOWN MAY NOT BE COMPLETE.

INDEX

ISSUE 3

PART C1
INPUT TO COMPLETING MARKER AND CODE TRANSLATION

SFD-10-01-C101

BELL TELEPHONE LABORATORIES INCORPORATED

DWG SIZE 6S

PRINTED IN U. S. A.

SFD-10-01-C101
2 SHEETS, SH 1

SEIZURE OF COMPLETING MARKER BY ORIGINATING REGISTER

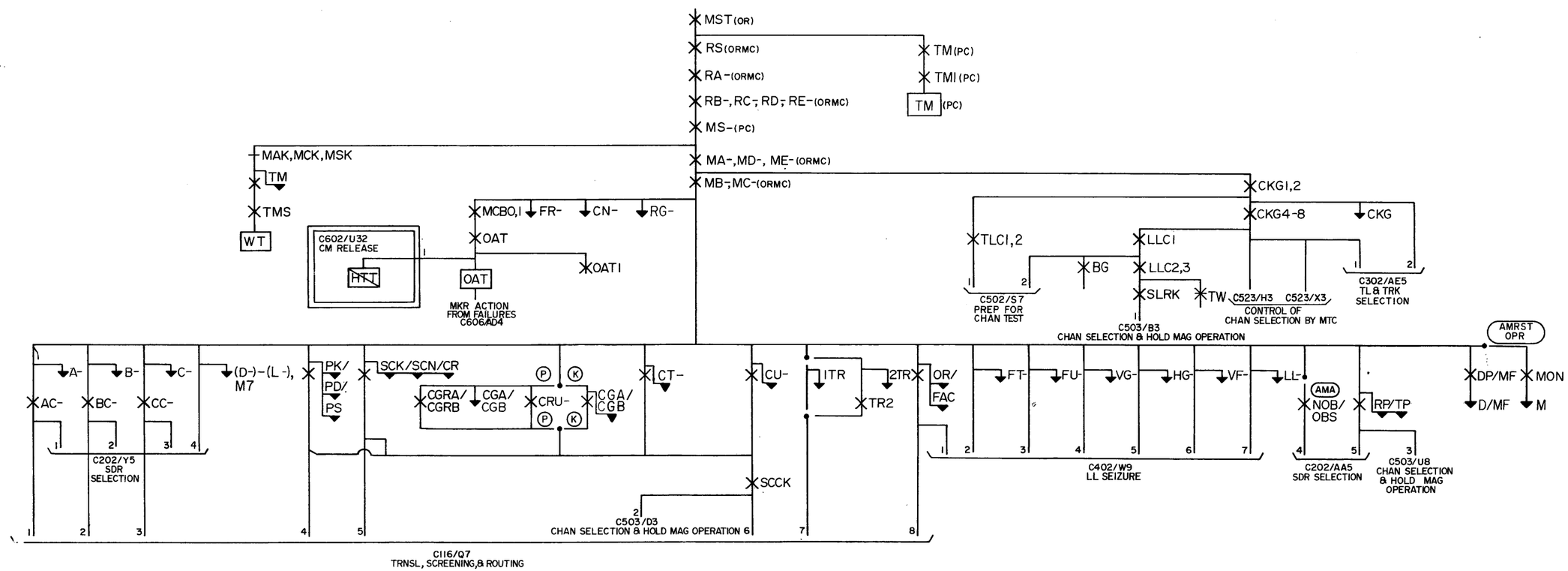

SHEET NOTES:

1. OPTION ASSIGNMENTS:

(K) 60 CLASSES OF SERVICE PROVIDED.

(P) RATE TREATMENT PROVIDED.

ISSUE 4

SFD-10-01-C102

SEQUENCE CHART
SEIZURE OF COMPLETING MARKER
BY ORIGINATING REGISTER

DWG SIZE 6S

BELL TELEPHONE LABORATORIES
INCORPORATED

SFD-10-01-C102

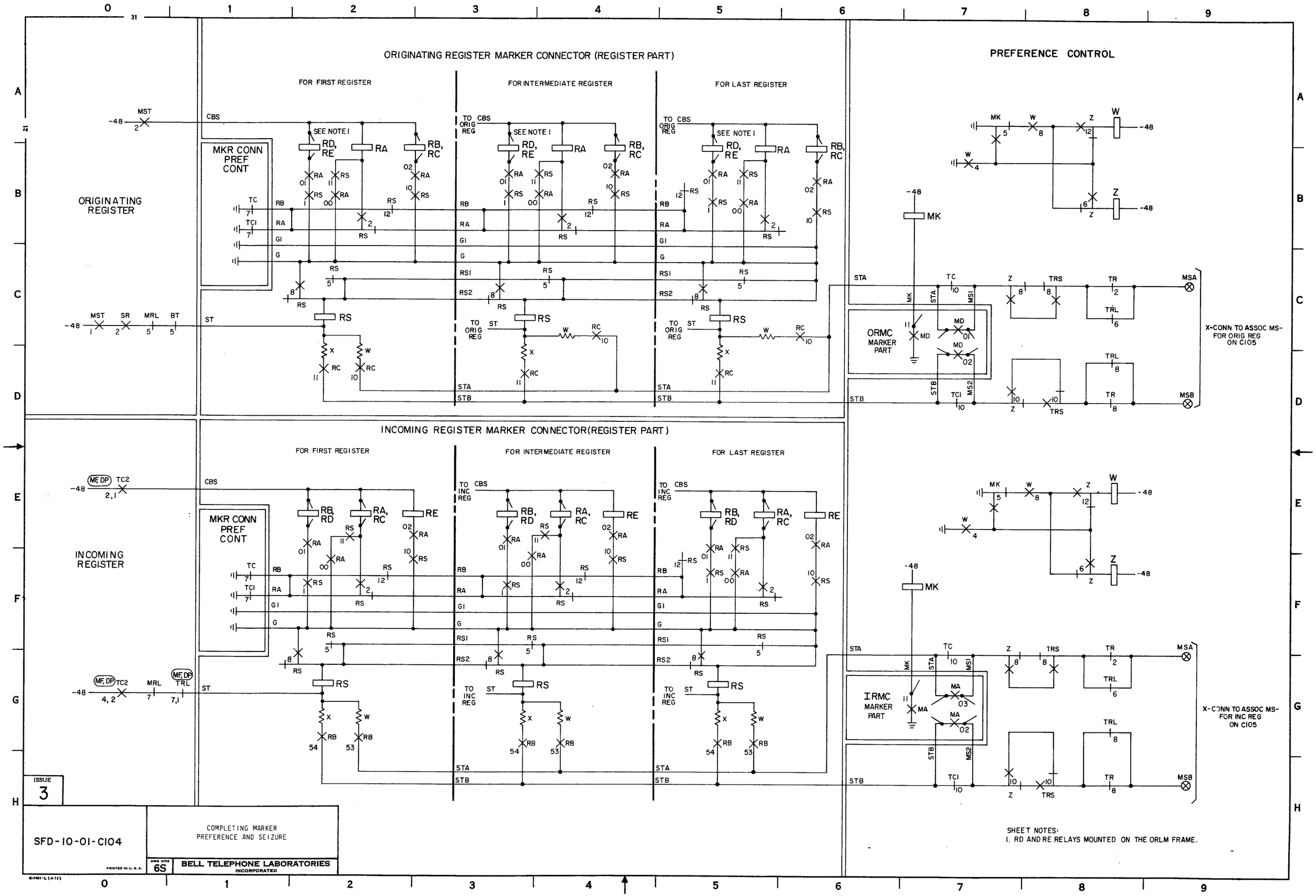

SFD-10-01-C104

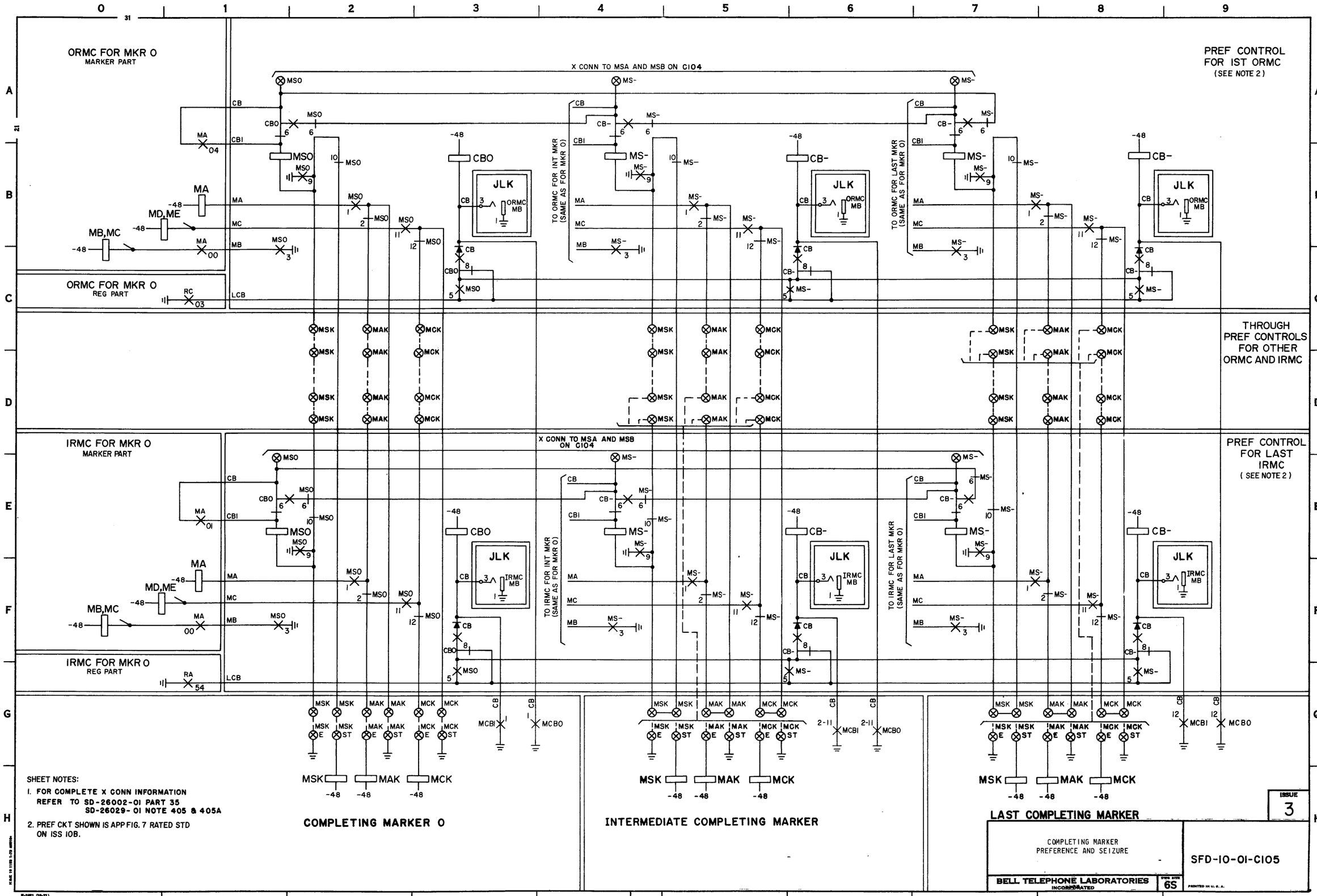

SFD-10-01-C105

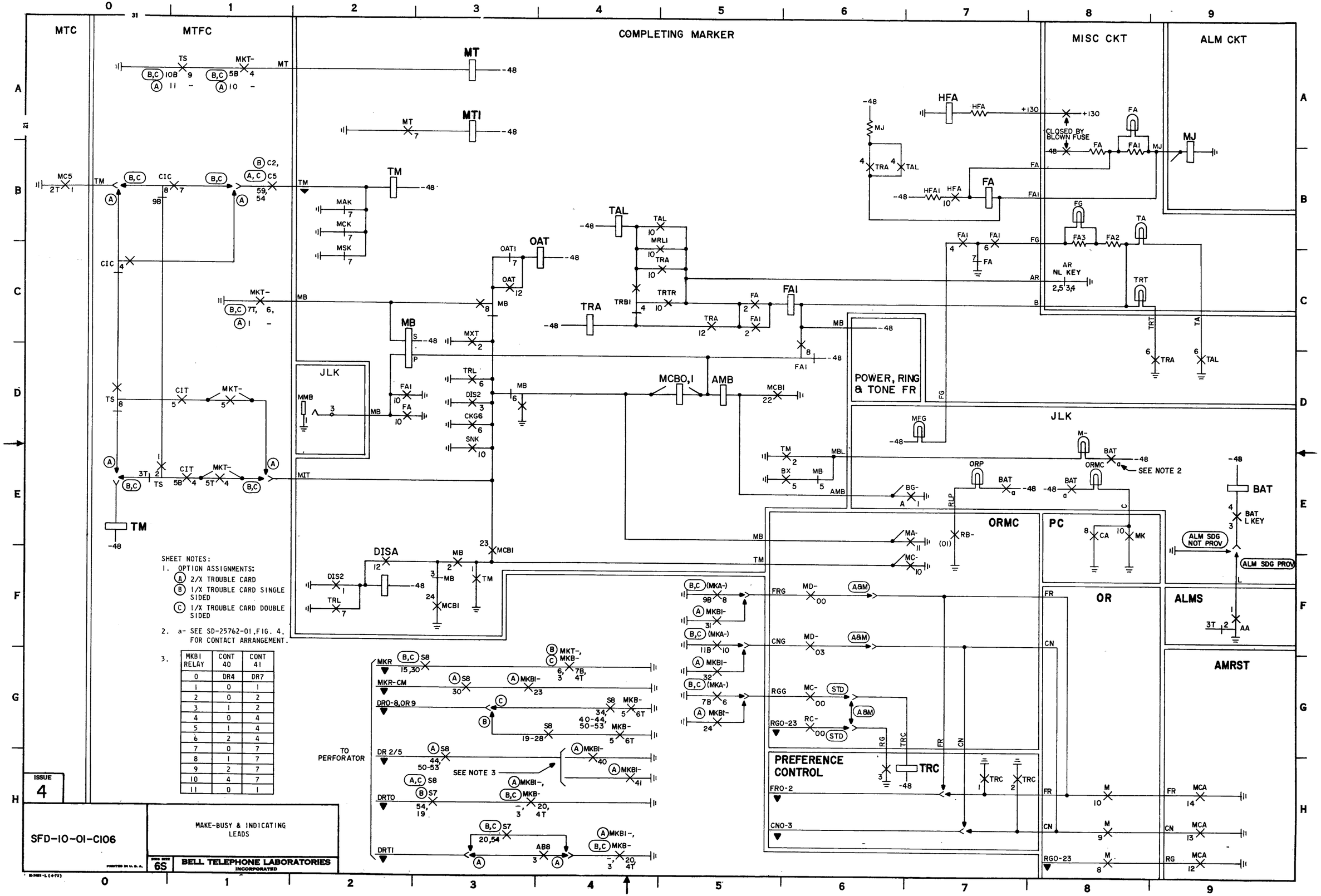

SHEET NOTES:

1. OPTION ASSIGNMENTS:
   - (A) 2/X TROUBLE CARD
   - (B) 1/X TROUBLE CARD SINGLE SIDED
   - (C) 1/X TROUBLE CARD DOUBLE SIDED
2. a- SEE SD-25762-01, FIG. 4, FOR CONTACT ARRANGEMENT.
3.

MKBI RELAY	CONT 40	CONT 41
0	DR4	DR7
1	0	1
2	0	2
3	1	2
4	0	4
5	1	4
6	2	4
7	0	7
8	1	7
9	2	7
10	4	7
11	0	1

SFD-10-01-C106

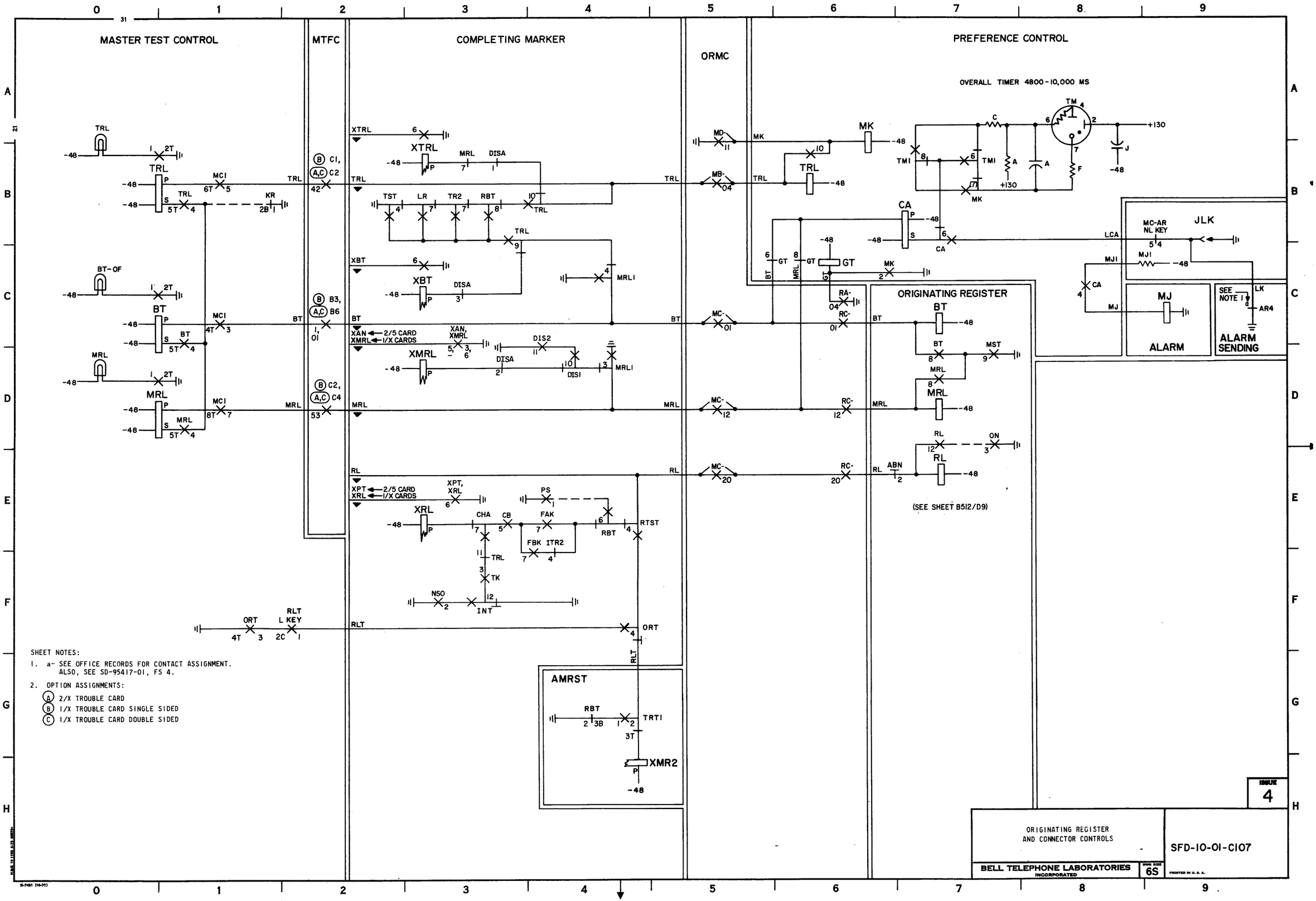

SFD-10-01-C107

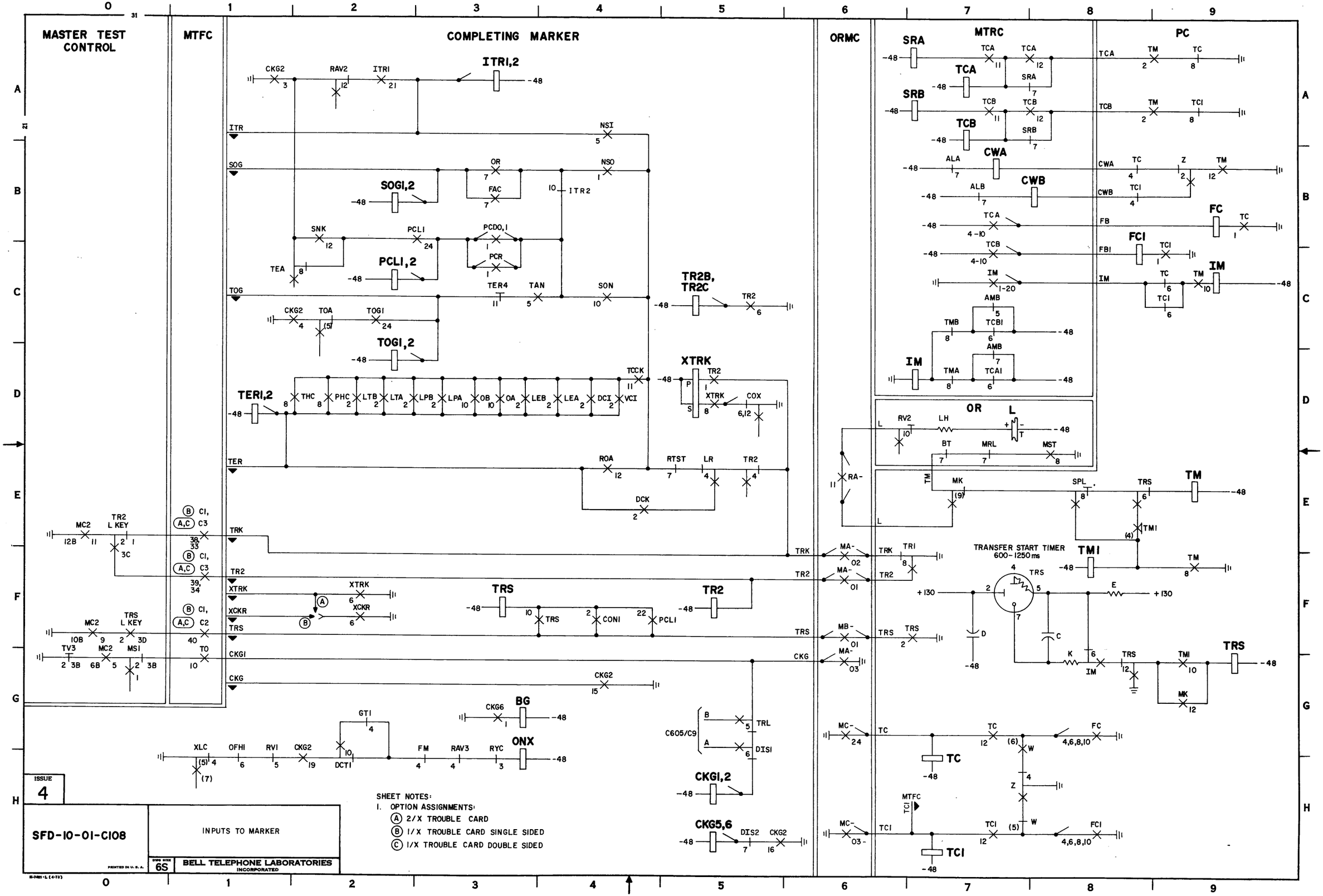

SFD-10-01-C108

COMPLETING MARKER

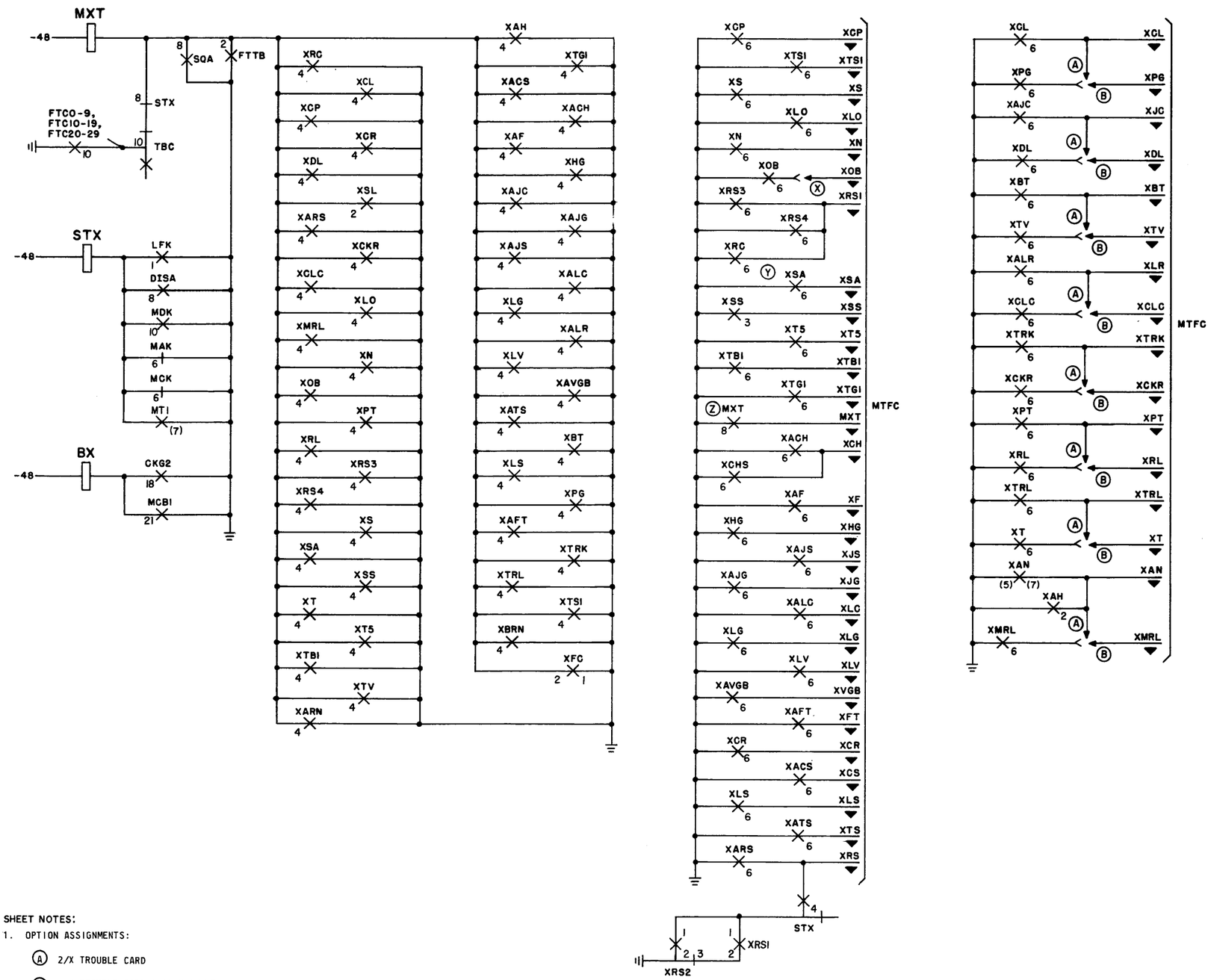

SHEET NOTES:

1. OPTION ASSIGNMENTS:

(A) 2/X TROUBLE CARD

(B) 1/X TROUBLE CARD SINGLE SIDED

(X) (A & M) -XOB PUNCH PROVIDED WHEN MXT PUNCH NOT PROVIDED.

(Y) U TYPE SENDER CONN AND AMA PROVIDED.

(Z) MXT PUNCH PROVIDED. (DOUBLE SIDED 1/X OR 2/X CARD.)

ISSUE 3

STANDING CROSS RELAY-
TROUBLE INDICATIONS

SFD-10-01-C109

BELL TELEPHONE LABORATORIES
INCORPORATED

6S

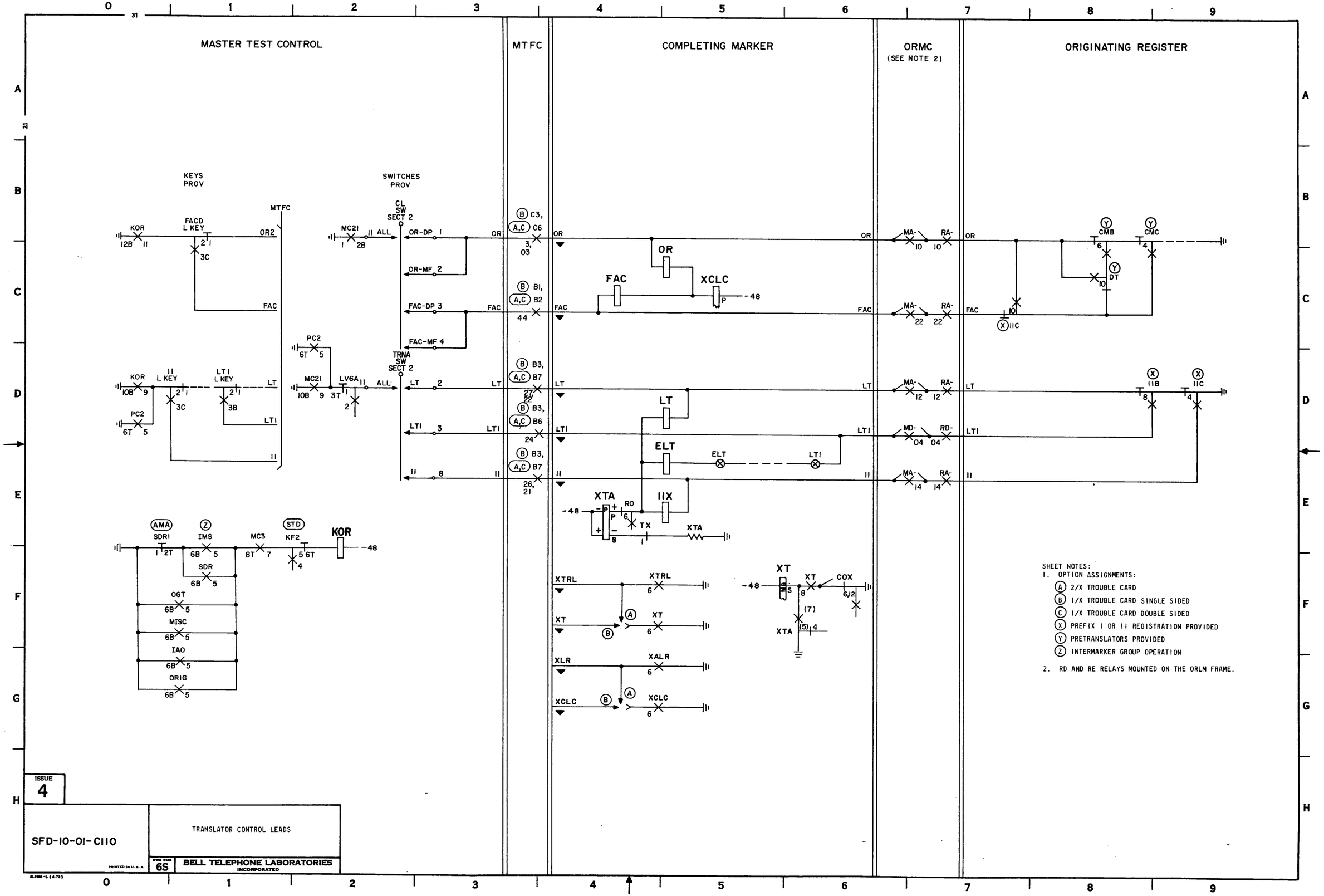
MASTER TEST CONTROL
MTFC
COMPLETING MARKER
ORMC
(SEE NOTE 2)
ORIGINATING REGISTER
KEYS
PROV
SWITCHES
PROV
FACD
L KEY
KOR
LT1
L KEY
CL
SW
SECT 2
TRNA
SW
SECT 2
OR-DP
OR-MF
FAC-DP
FAC-MF
OR
FAC
XCLC
LT
ELT
XTA
RO
TX
IIX
XTRL
XT
XLR
XALR
COX
CMB
CMC
DT
SDRI
IMS
SDR
OGT
MISC
IAO
ORIG
MC3
KF2
SHEET NOTES:
1. OPTION ASSIGNMENTS:
(A) 2/X TROUBLE CARD
(B) 1/X TROUBLE CARD SINGLE SIDED
(C) 1/X TROUBLE CARD DOUBLE SIDED
(X) PREFIX I OR II REGISTRATION PROVIDED
(Y) PRETRANSLATORS PROVIDED
(Z) INTERMARKER GROUP OPERATION
2. RD AND RE RELAYS MOUNTED ON THE ORLM FRAME.
ISSUE 4
SFD-10-01-C110
TRANSLATOR CONTROL LEADS
DWG SIZE 6S
BELL TELEPHONE LABORATORIES
INCORPORATED
PRINTED IN U.S.A.
SFD-10-01-C110

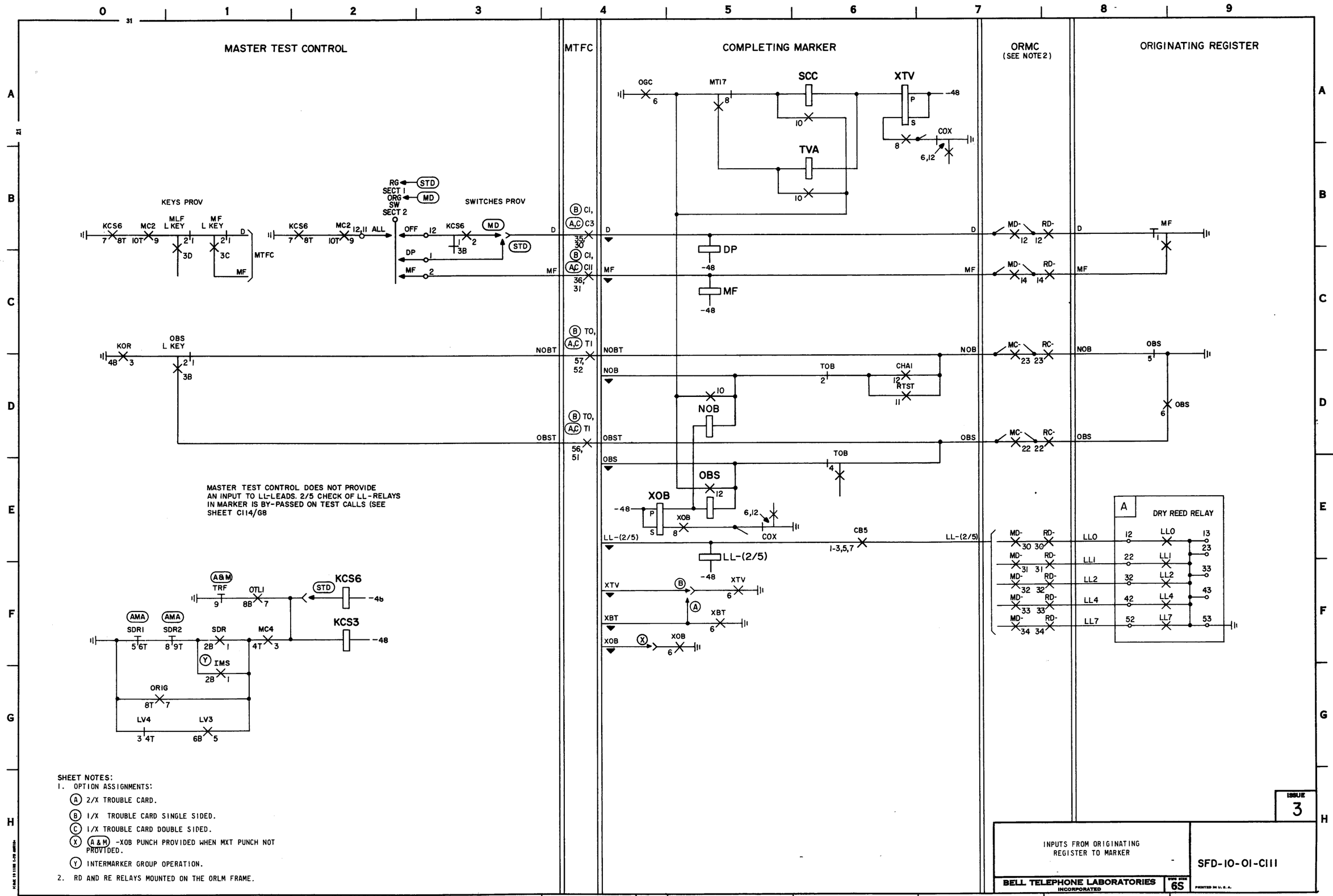

SFD-10-01-C111

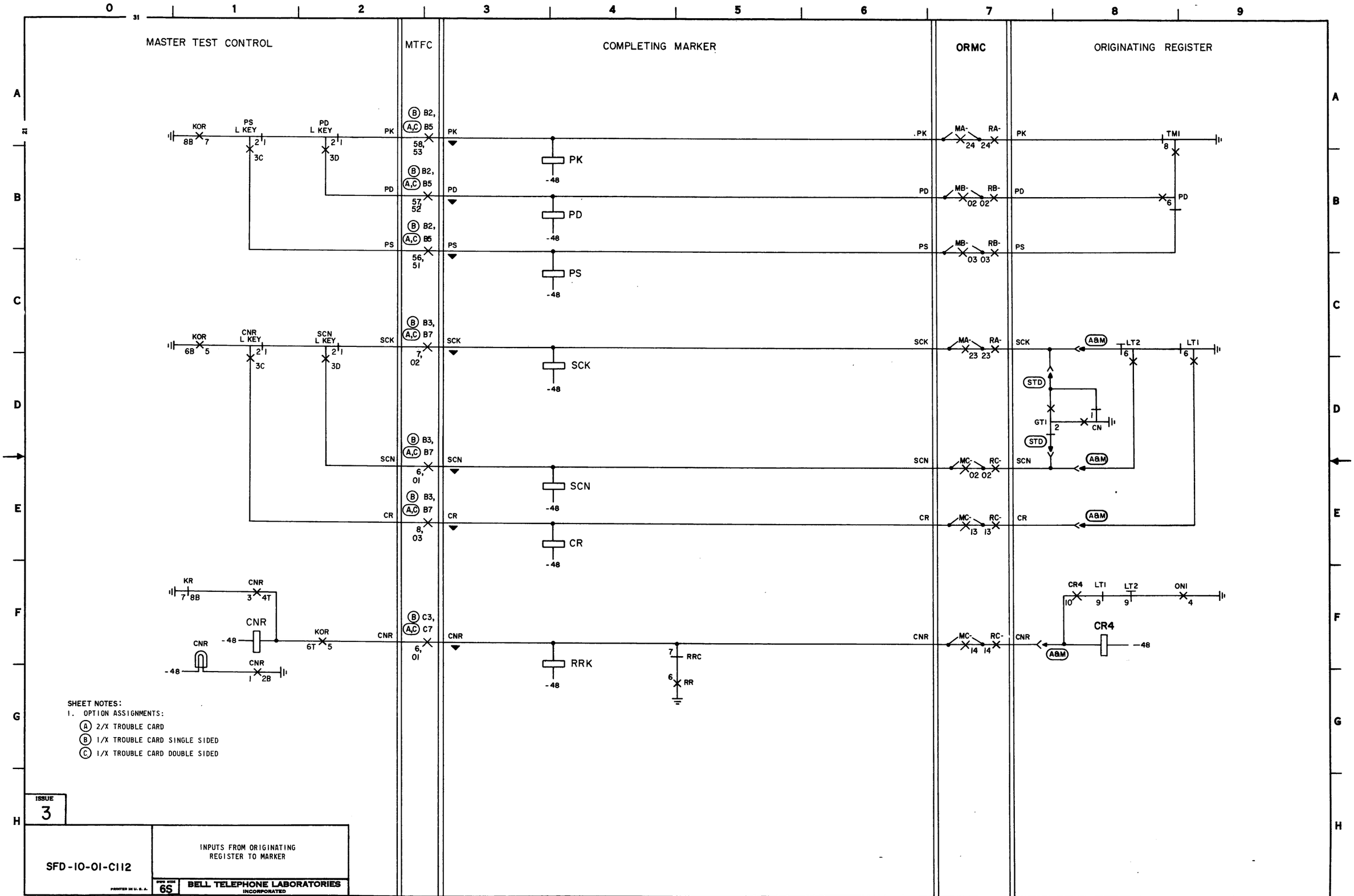

SHEET NOTES:

1. OPTION ASSIGNMENTS:
   - (A) 2/X TROUBLE CARD
   - (B) 1/X TROUBLE CARD SINGLE SIDED
   - (C) 1/X TROUBLE CARD DOUBLE SIDED

ISSUE 3

SFD-10-01-C112

INPUTS FROM ORIGINATING REGISTER TO MARKER

DWG SIZE 6S

BELL TELEPHONE LABORATORIES INCORPORATED

PRINTED IN U.S.A.

E-74651-L (4-73)

SFD-10-01-C112

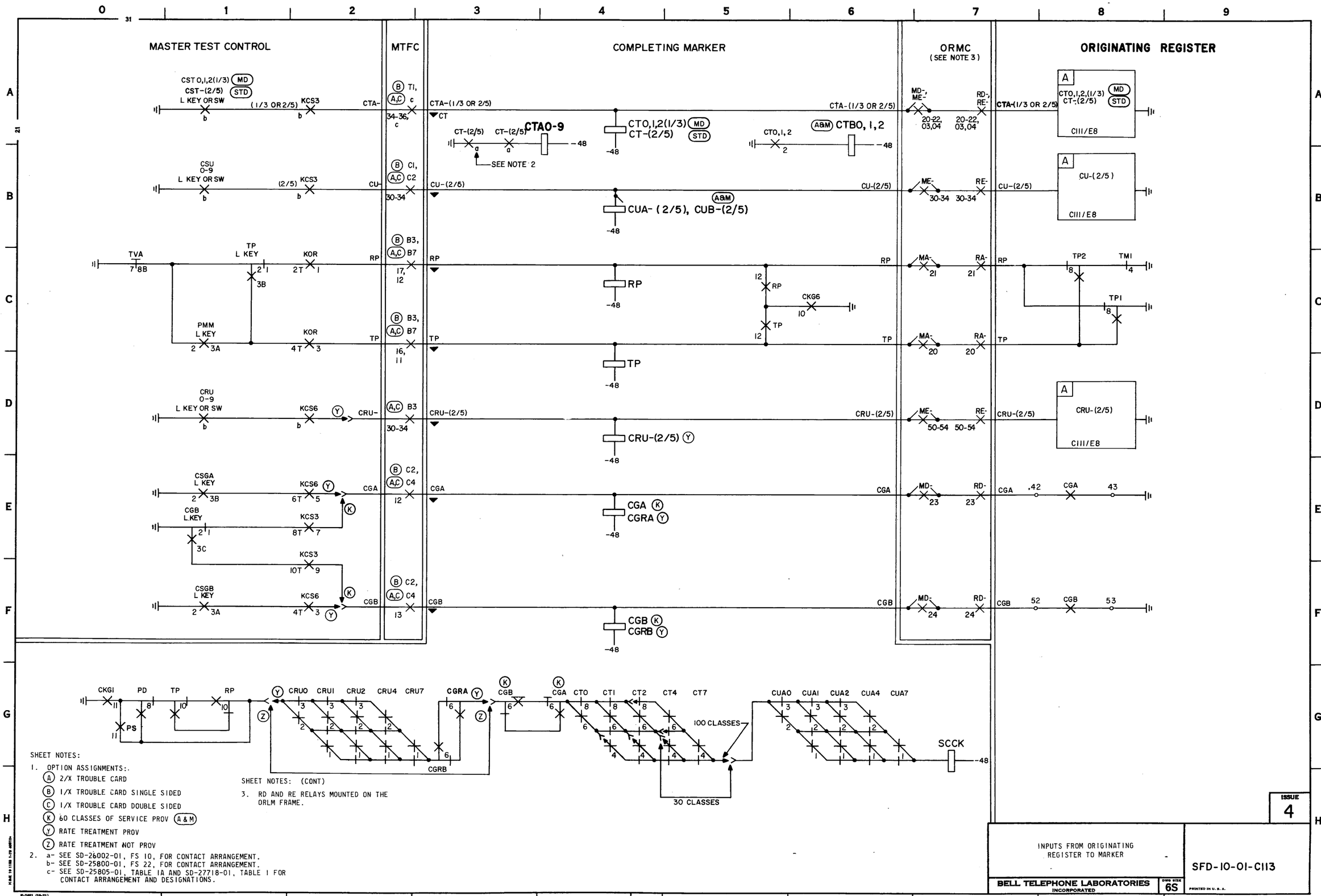

SHEET NOTES:

1. OPTION ASSIGNMENTS:.
   - (A) 2/X TROUBLE CARD
   - (B) 1/X TROUBLE CARD SINGLE SIDED
   - (C) 1/X TROUBLE CARD DOUBLE SIDED
   - (K) 60 CLASSES OF SERVICE PROV (A & M)
   - (Y) RATE TREATMENT PROV
   - (Z) RATE TREATMENT NOT PROV
2. a- SEE SD-26002-01, FS 10, FOR CONTACT ARRANGEMENT.
   b- SEE SD-25800-01, FS 22, FOR CONTACT ARRANGEMENT.
   c- SEE SD-25805-01, TABLE IA AND SD-27718-01, TABLE I FOR CONTACT ARRANGEMENT AND DESIGNATIONS.

SHEET NOTES: (CONT)

3. RD AND RE RELAYS MOUNTED ON THE ORLM FRAME.

ISSUE 4

INPUTS FROM ORIGINATING REGISTER TO MARKER

BELL TELEPHONE LABORATORIES INCORPORATED

DWG SIZE 6S

SFD-10-01-C113

PRINTED IN U. S. A.

SFD-10-01-C113

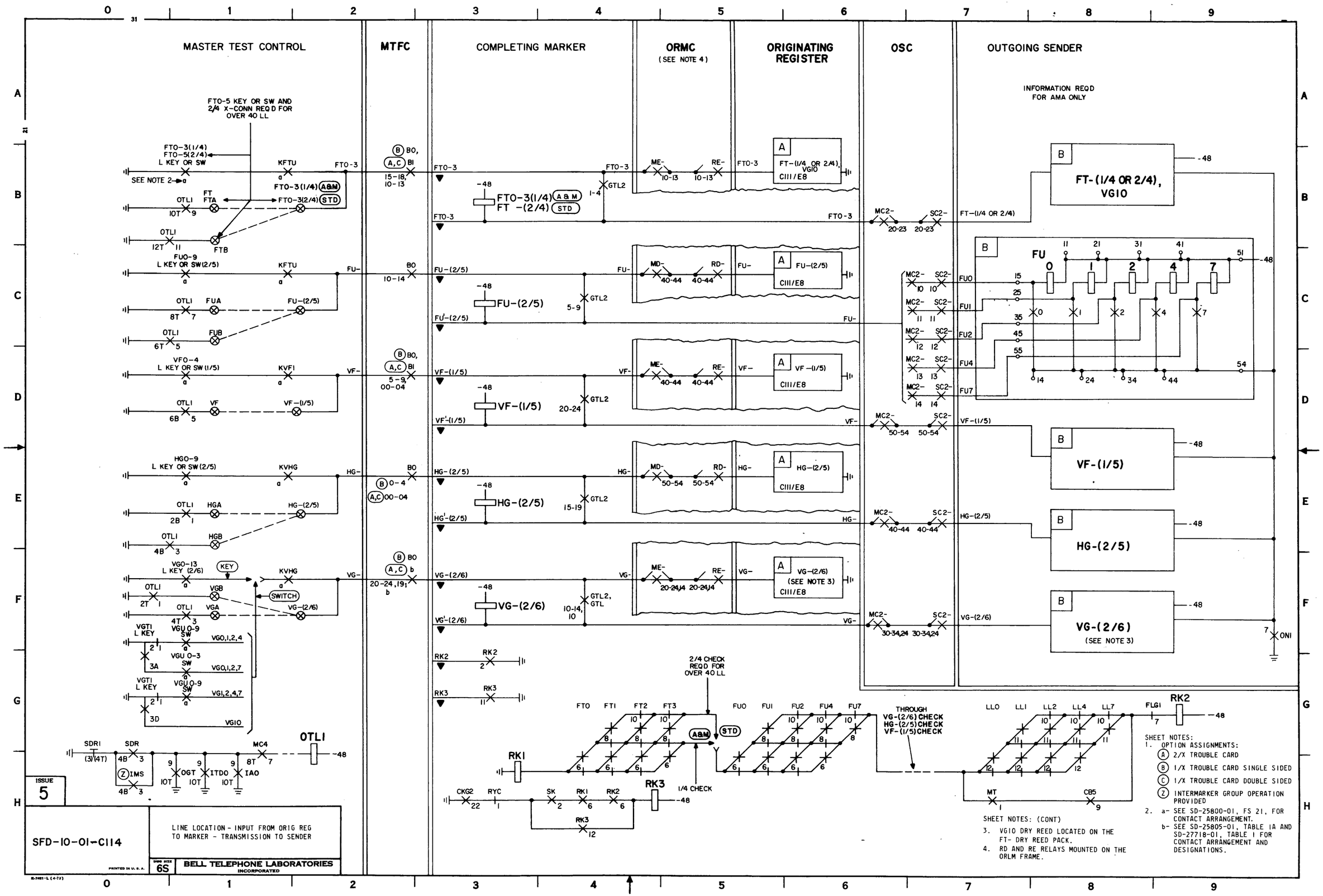
MASTER TEST CONTROL
MTFC
COMPLETING MARKER
ORMC
(SEE NOTE 4)
ORIGINATING REGISTER
OSC
OUTGOING SENDER
INFORMATION REQD FOR AMA ONLY
FTO-5 KEY OR SW AND 2/4 X-CONN REQ D FOR OVER 40 LL
FTO-3(1/4)
FTO-5(2/4)
L KEY OR SW
SEE NOTE 2
FTO-3(1/4) A&M
FTO-3(2/4) STD
FTO-3(1/4) A & M
FT -(2/4) STD
FT-(1/4 OR 2/4), VGIO
CIII/E8
FT- (1/4 OR 2/4), VGIO
FUO-9
L KEY OR SW(2/5)
FU-(2/5)
VFO-4
L KEY OR SW (1/5)
VF-(1/5)
HGO-9
L KEY OR SW (2/5)
HG-(2/5)
VGO-13
L KEY (2/6)
VG-(2/6)
(SEE NOTE 3)
VGI L KEY
VGU 0-9 SW
VGU 0-3 SW
VGO,1,2,4
VGO,1,2,7
VGI,2,4,7
VGIO
SDRI
SDR
IMS
OGT
ITDO
IAO
MC4
OTLI
2/4 CHECK REQD FOR OVER 40 LL
RK1
RK2
RK3
CKG2
RYC
SK
1/4 CHECK
THROUGH VG-(2/6) CHECK HG-(2/5) CHECK VF-(1/5) CHECK
FLGI
MT
CB5
ONI
SHEET NOTES:
1. OPTION ASSIGNMENTS:
A 2/X TROUBLE CARD
B 1/X TROUBLE CARD SINGLE SIDED
C 1/X TROUBLE CARD DOUBLE SIDED
Z INTERMARKER GROUP OPERATION PROVIDED
2. a- SEE SD-25800-01, FS 21, FOR CONTACT ARRANGEMENT.
b- SEE SD-25805-01, TABLE IA AND SD-27718-01, TABLE I FOR CONTACT ARRANGEMENT AND DESIGNATIONS.
SHEET NOTES: (CONT)
3. VGIO DRY REED LOCATED ON THE FT- DRY REED PACK.
4. RD AND RE RELAYS MOUNTED ON THE ORLM FRAME.
ISSUE 5
SFD-10-01-C114
LINE LOCATION - INPUT FROM ORIG REG TO MARKER - TRANSMISSION TO SENDER
DWG SIZE 6S
BELL TELEPHONE LABORATORIES INCORPORATED
PRINTED IN U.S.A.
SFD-10-01-C114

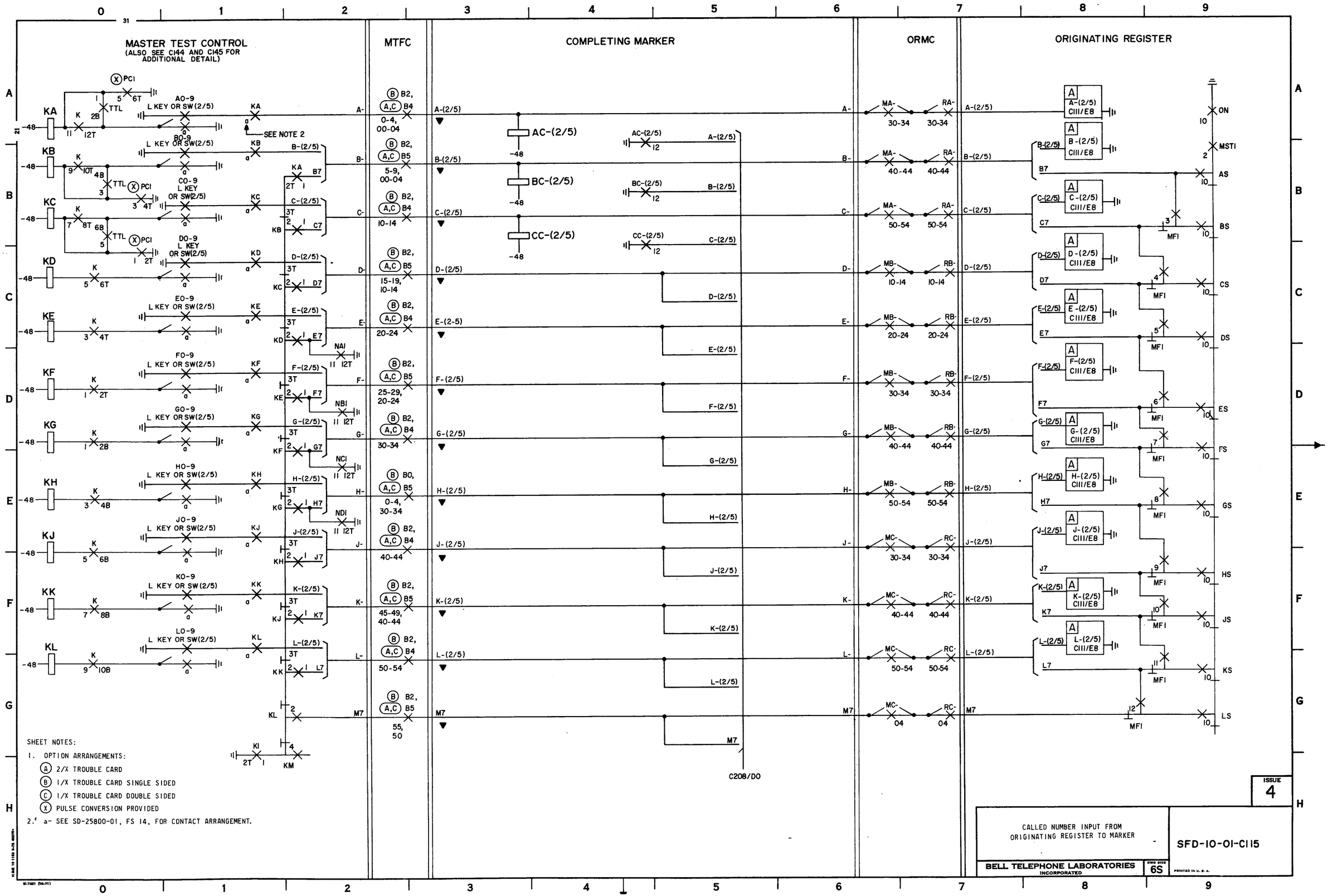

SFD-10-01-C115

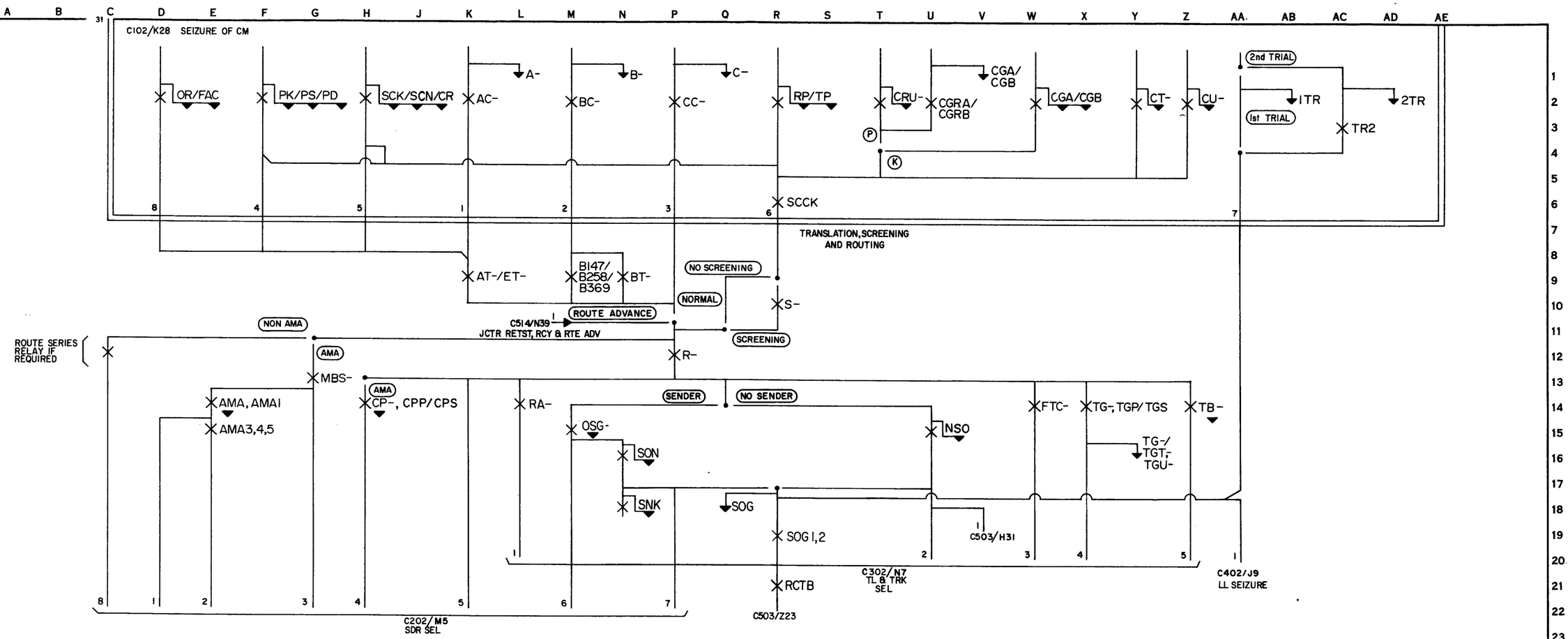

SHEET NOTES:

1. OPTION ASSIGNMENTS:
   - (K) 60 CLASSES OF SERVICE
   - (P) RATE TREATMENT

ISSUE 4	
SFD-10-01-C116	SEQUENCE CHART TRANSLATION, SCREENING, AND ROUTING
	DWG SIZE 6S — BELL TELEPHONE LABORATORIES INCORPORATED

E-7421-B (10-71)

SFD-10-01-C116

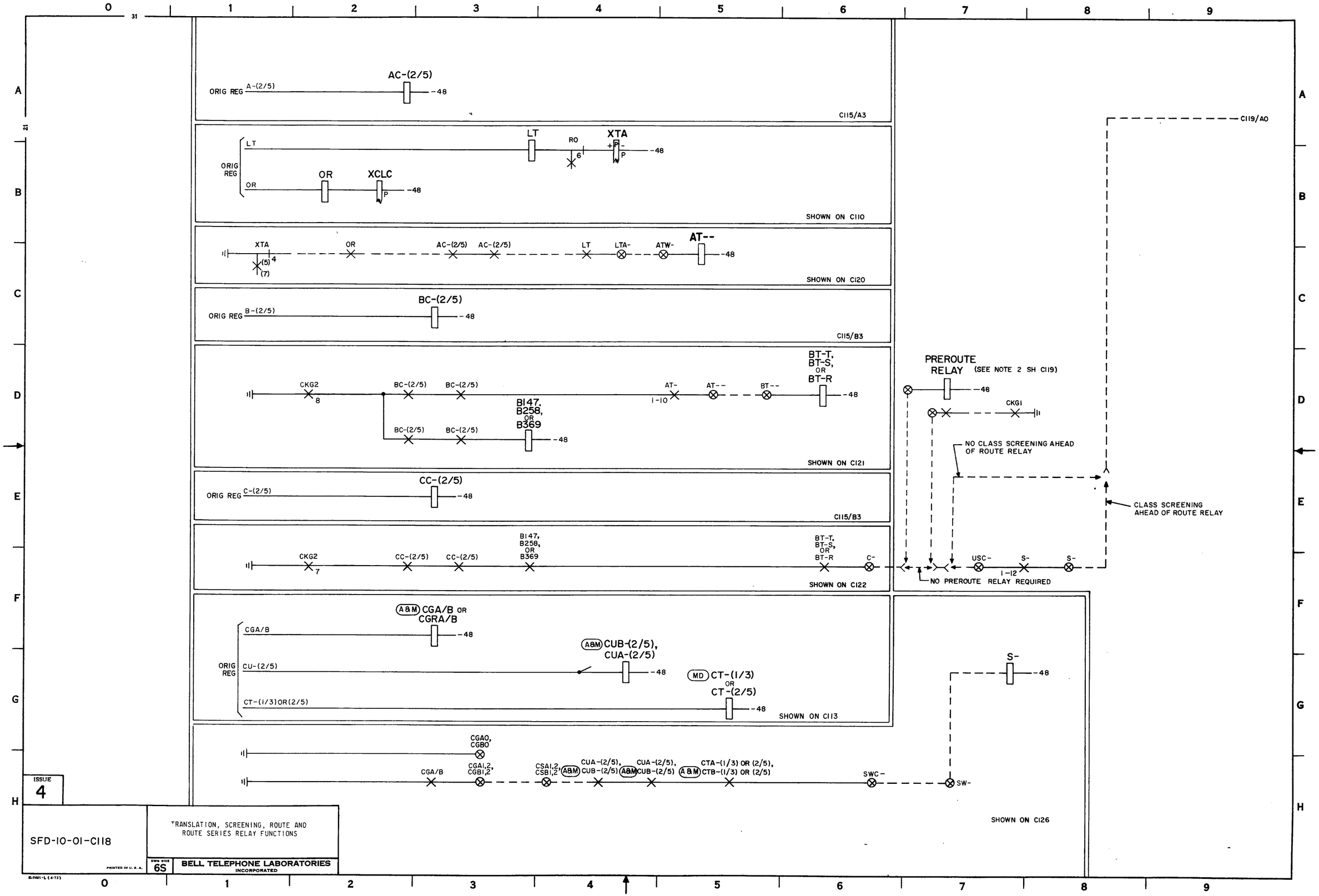
ORIG REG A-(2/5)
AC-(2/5)
-48
C115/A3
ORIG REG
LT
OR
LT
RO
XTA
OR
XCLC
-48
SHOWN ON C110
XTA
OR
AC-(2/5)
AC-(2/5)
LT
LTA-
ATW-
AT--
-48
SHOWN ON C120
ORIG REG B-(2/5)
BC-(2/5)
-48
C115/B3
CKG2
BC-(2/5)
BC-(2/5)
AT-
AT--
BT--
BT-T, BT-S, OR BT-R
-48
B147, B258, OR B369
-48
SHOWN ON C121
ORIG REG C-(2/5)
CC-(2/5)
-48
C115/B3
CKG2
CC-(2/5)
CC-(2/5)
B147, B258, OR B369
BT-T, BT-S, OR BT-R
C-
SHOWN ON C122
PREROUTE RELAY (SEE NOTE 2 SH C119)
-48
CKG1
NO CLASS SCREENING AHEAD OF ROUTE RELAY
CLASS SCREENING AHEAD OF ROUTE RELAY
C119/A0
USC-
S-
S-
NO PREROUTE RELAY REQUIRED
A&M CGA/B OR CGRA/B
ORIG REG
CGA/B
-48
A&M CUB-(2/5), CUA-(2/5)
CU-(2/5)
-48
MD CT-(1/3) OR CT-(2/5)
CT-(1/3)OR(2/5)
-48
SHOWN ON C113
S-
-48
CGAO, CGBO
CGA/B
CGA1,2, CGB1,2
CSA1,2, CSB1,2
A&M
CUA-(2/5), CUB-(2/5)
A&M
CUA-(2/5), CUB-(2/5)
A&M
CTA-(1/3) OR (2/5), CTB-(1/3) OR (2/5)
SWC-
SW-
SHOWN ON C126
ISSUE 4
SFD-10-01-C118
TRANSLATION, SCREENING, ROUTE AND ROUTE SERIES RELAY FUNCTIONS
DWG SIZE 6S
BELL TELEPHONE LABORATORIES INCORPORATED
PRINTED IN U. S. A.
E-7421-L (4-73)
SFD-10-01-C118

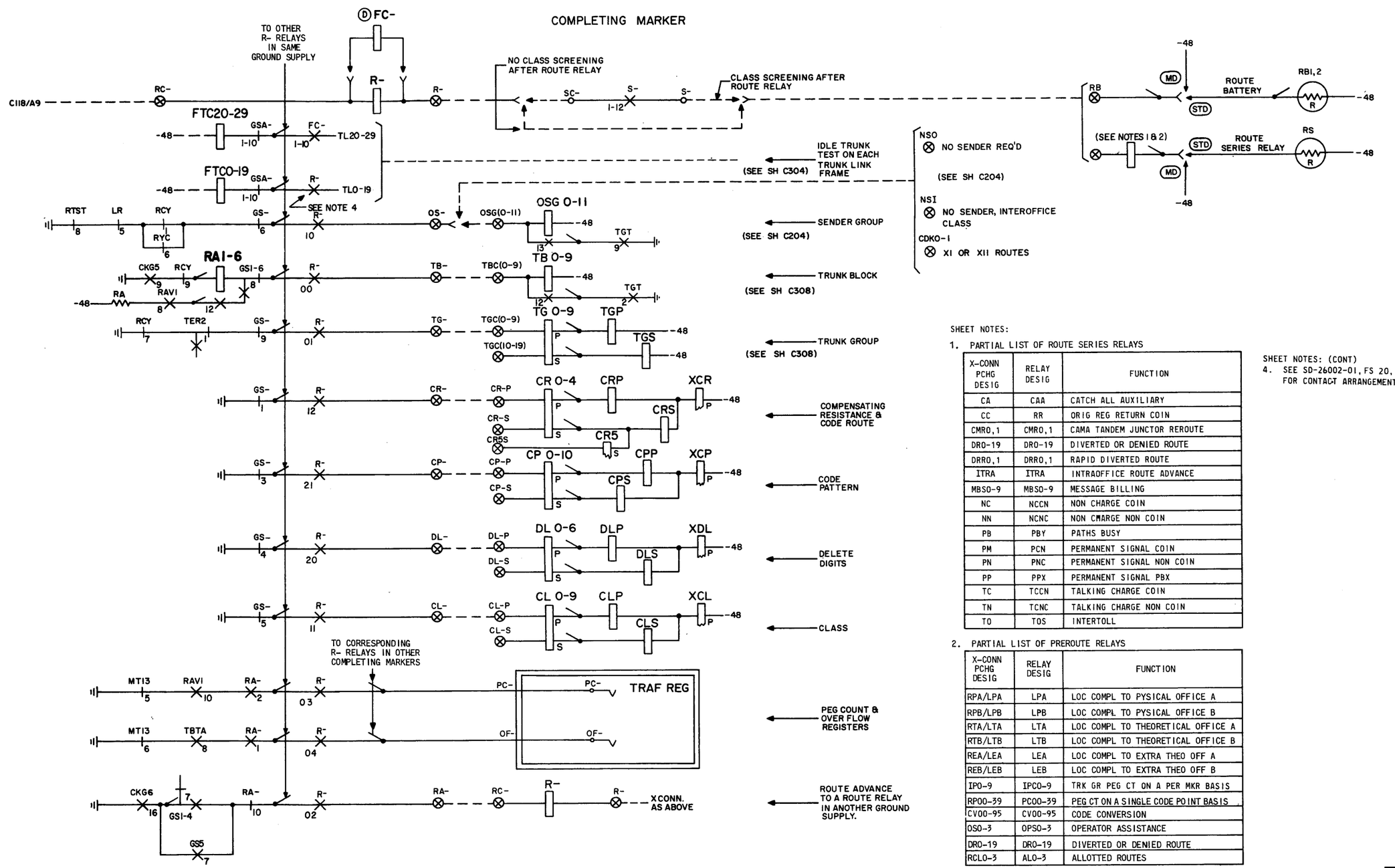

SHEET NOTES:

1. PARTIAL LIST OF ROUTE SERIES RELAYS

X-CONN PCHG DESIG	RELAY DESIG	FUNCTION
CA	CAA	CATCH ALL AUXILIARY
CC	RR	ORIG REG RETURN COIN
CMRO,1	CMRO,1	CAMA TANDEM JUNCTOR REROUTE
DRO-19	DRO-19	DIVERTED OR DENIED ROUTE
DRRO,1	DRRO,1	RAPID DIVERTED ROUTE
ITRA	ITRA	INTRAOFFICE ROUTE ADVANCE
MBSO-9	MBSO-9	MESSAGE BILLING
NC	NCCN	NON CHARGE COIN
NN	NCNC	NON CHARGE NON COIN
PB	PBY	PATHS BUSY
PM	PCN	PERMANENT SIGNAL COIN
PN	PNC	PERMANENT SIGNAL NON COIN
PP	PPX	PERMANENT SIGNAL PBX
TC	TCCN	TALKING CHARGE COIN
TN	TCNC	TALKING CHARGE NON COIN
TO	TOS	INTERTOLL

2. PARTIAL LIST OF PREROUTE RELAYS

X-CONN PCHG DESIG	RELAY DESIG	FUNCTION
RPA/LPA	LPA	LOC COMPL TO PYSICAL OFFICE A
RPB/LPB	LPB	LOC COMPL TO PYSICAL OFFICE B
RTA/LTA	LTA	LOC COMPL TO THEORETICAL OFFICE A
RTB/LTB	LTB	LOC COMPL TO THEORETICAL OFFICE B
REA/LEA	LEA	LOC COMPL TO EXTRA THEO OFF A
REB/LEB	LEB	LOC COMPL TO EXTRA THEO OFF B
IPO-9	IPCO-9	TRK GR PEG CT ON A PER MKR BASIS
RPOO-39	PCOO-39	PEG CT ON A SINGLE CODE POINT BASIS
CVOO-95	CVOO-95	CODE CONVERSION
OSO-3	OPSO-3	OPERATOR ASSISTANCE
DRO-19	DRO-19	DIVERTED OR DENIED ROUTE
RCLO-3	ALO-3	ALLOTTED ROUTES

3. OPTION ASSIGNMENTS:

D TRIPLE TRUNK LINK FRAME OPERATION.

SHEET NOTES: (CONT)

4. SEE SD-26002-01, FS 20, FOR CONTACT ARRANGEMENT.

ISSUE 4

TRANSLATION, SCREENING, ROUTE AND ROUTE SERIES RELAY FUNCTIONS

BELL TELEPHONE LABORATORIES INCORPORATED

DWG SIZE 6S

SFD-10-01-C119

PRINTED IN U.S.A.

SFD-10-01-C119

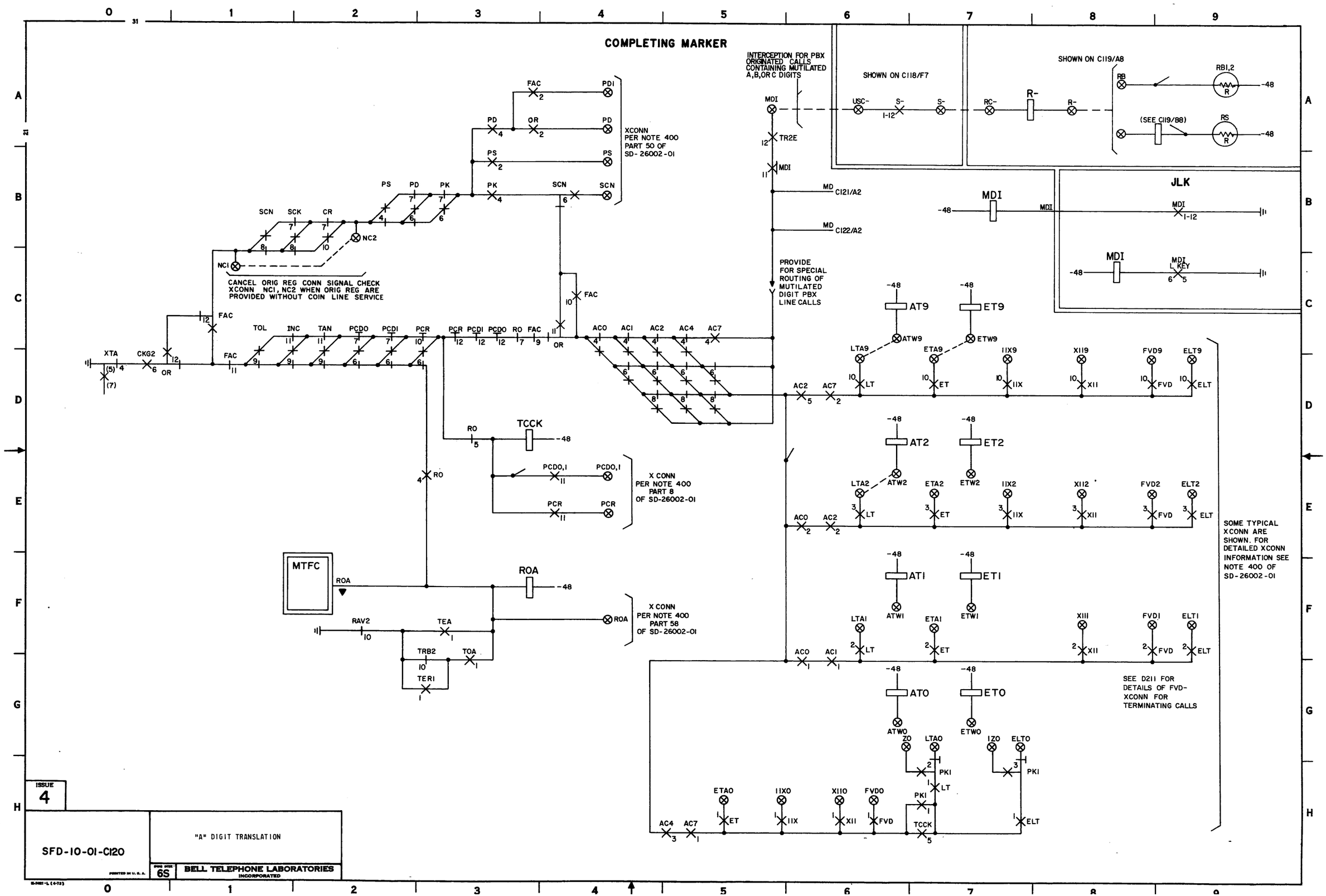

SFD-10-01-C120

COMPLETING MARKER

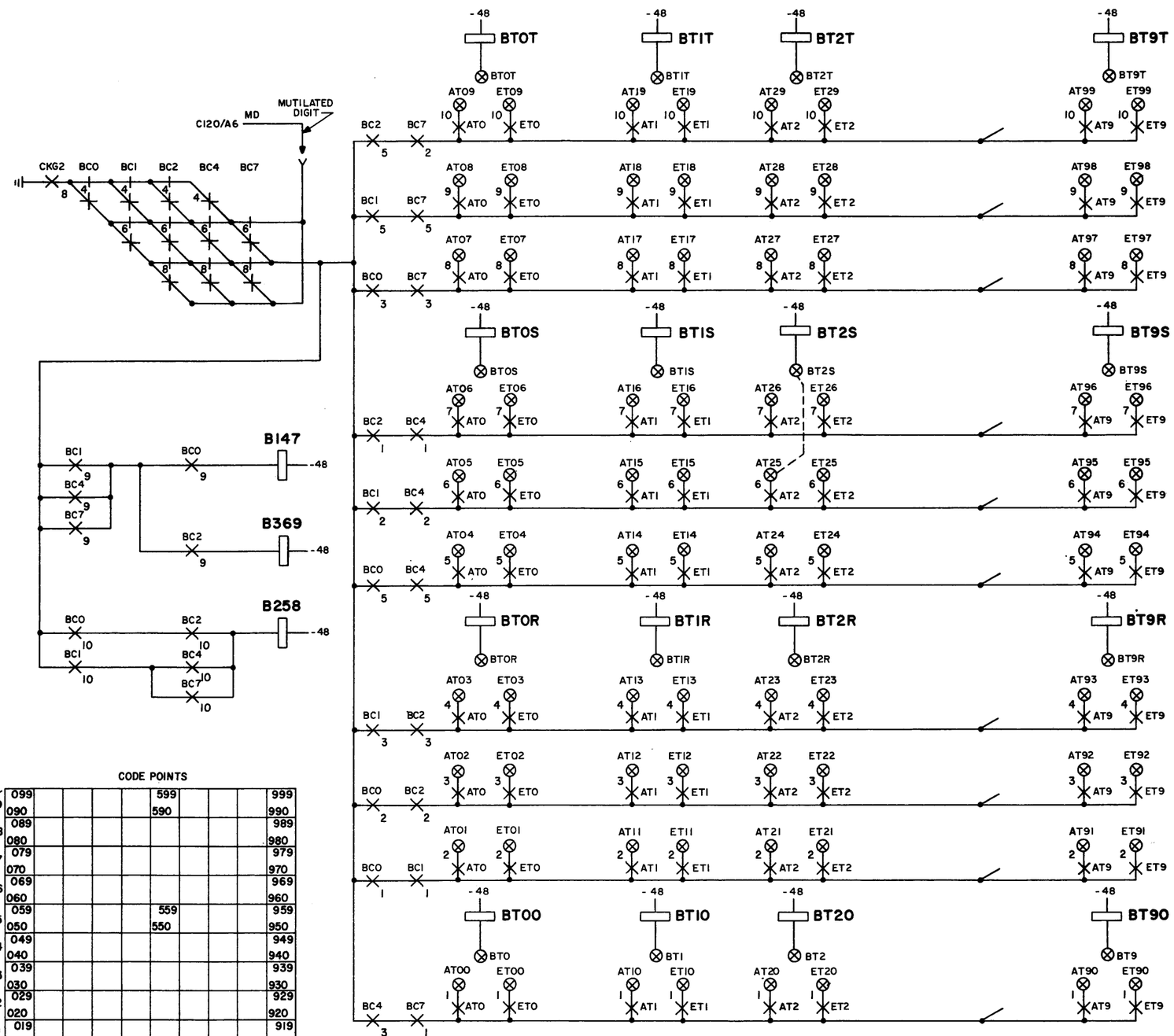

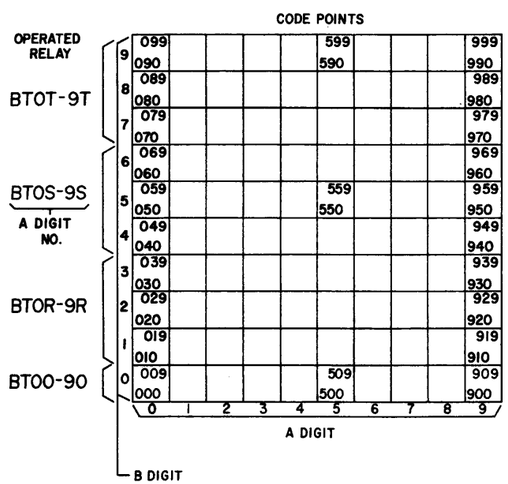

	0	1	2	3	4	5	6	7	8	9
9	099 / 090					599 / 590				999 / 990
8	089 / 080									989 / 980
7	079 / 070									979 / 970
6	069 / 060									969 / 960
5	059 / 050					559 / 550				959 / 950
4	049 / 040									949 / 940
3	039 / 030									939 / 930
2	029 / 020									929 / 920
1	019 / 010									919 / 910
0	009 / 000					509 / 500				909 / 900

ISSUE 3

CODE POINTS
2 DIGIT TRANSLATION

SFD-10-01-C121

BELL TELEPHONE LABORATORIES INCORPORATED

SHEET SIZE 6S

PRINTED IN U. S. A.

SFD-10-01-C121

COMPLETING MARKER

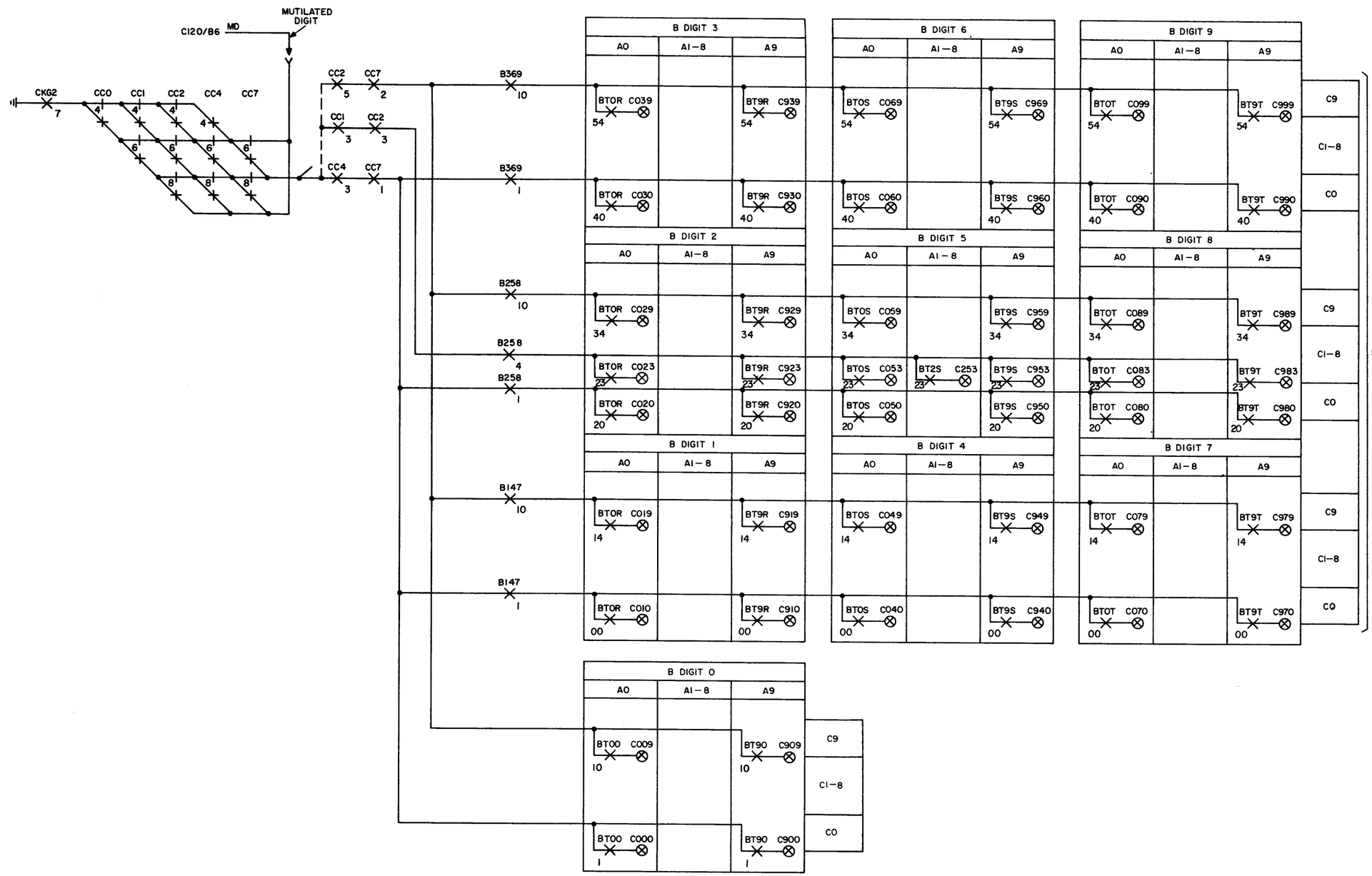

ISSUE 3

SFD-10-01-C122

CODE POINTS
3 DIGIT TRANSLATION

BELL TELEPHONE LABORATORIES INCORPORATED

SFD-10-01-C122

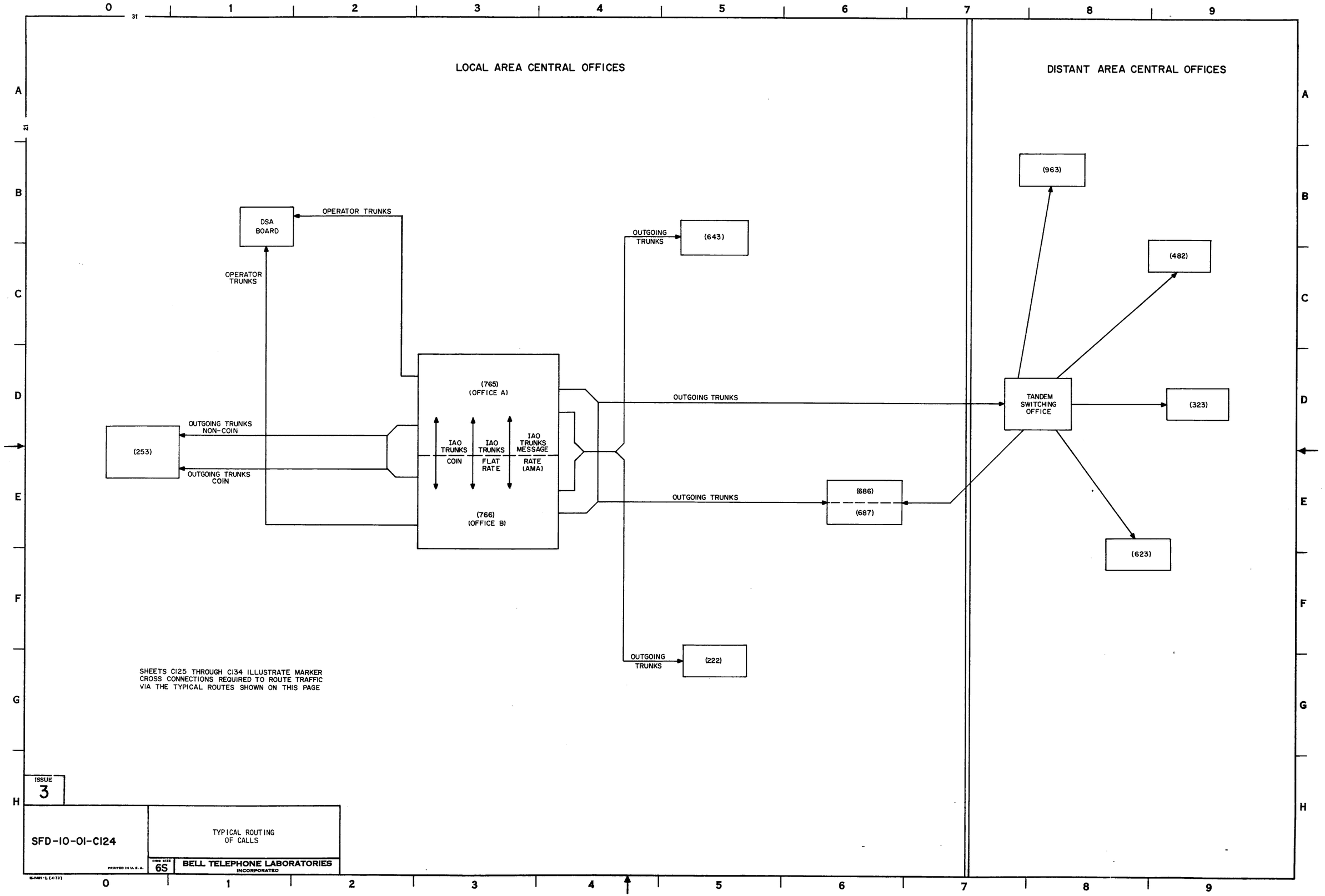
LOCAL AREA CENTRAL OFFICES
DISTANT AREA CENTRAL OFFICES
DSA BOARD
OPERATOR TRUNKS
OPERATOR TRUNKS
OUTGOING TRUNKS
(643)
(963)
(482)
(765) (OFFICE A)
OUTGOING TRUNKS
TANDEM SWITCHING OFFICE
(323)
OUTGOING TRUNKS NON-COIN
(253)
OUTGOING TRUNKS COIN
IAO TRUNKS COIN
IAO TRUNKS FLAT RATE
IAO TRUNKS MESSAGE RATE (AMA)
(766) (OFFICE B)
OUTGOING TRUNKS
(686)
(687)
(623)
OUTGOING TRUNKS
(222)
SHEETS C125 THROUGH C134 ILLUSTRATE MARKER CROSS CONNECTIONS REQUIRED TO ROUTE TRAFFIC VIA THE TYPICAL ROUTES SHOWN ON THIS PAGE
ISSUE 3
SFD-10-01-C124
TYPICAL ROUTING OF CALLS
6S
BELL TELEPHONE LABORATORIES INCORPORATED
PRINTED IN U. S. A.
SFD-10-01-C124

MARKER CROSS-CONNECTIONS
CLASS OF SERVICE
NO. 5 CROSSBAR

OFFICE _____
SHEET _____
MARKER GROUP _____

CLASS OF SERVICE				(765) PBXF	(765) 1F	(765) 2F	(765) 4F	(765) PBXMR	(765) 1MR	(765) 2MR	(765) COIN	(766) PBXF	(766) 1F	(766) 2F	(766) 4F	(766) PBXMR	(766) 1MR	(766) 2MR	(766) COIN	MARKER GROUP TAN	MARKER GROUP TOLL	REMARKS
ASSIGNMENT	SERVICE RELAY NO.		SORT-1	00	01	02	03	04	05	06	07	20	21	22	23	24	25	26	27	08	09	
	PCHG	SC		CROSS-CONNECT																		
			FROM	TO																		
OPERATOR & RESTRICTED CODE	20	00 USC 0	S0	SG05	SG05	SG05	RC15	SG06	SG06	SG06	RC16	SG07	SG07	SG07	RC18	SG08	SG08	SG08	RC19	DR3	DR3	
LONG DISTANCE C-211	C-211	01 1	S1	SG02	SG02	SG02	SG02	SG02	SG02	SG02	RC01	SG04	SG04	SG04	SG04	SG04	SG04	SG04	RC03			NO X-CONN REQD FOR BLANK SPACES
SERVICE CODES X11	RGO	02 2	S2	SG03	SG03	SG03	SG03	SG03	SG03	SG03	NC	SG03	SG03	SG03	SG03	SG03	SG03	SG03	NC	DR3	DR3	
INTRA OFFICE	APR BPR	03 3	S3	SG00	SG00	SG00	SG00	SG01	SG01	SG01	RC20	SG00	SG00	SG00	SG00	SG01	SG01	SG01	RC20			NO X-CONN REQD FOR BLANK SPACES
REVERTIVE CALL	RV	04 4	S4	BL	BL	SG12	SG12	BL	BL	SG12	BL	BL	BL	SG12	SG12	BL	BL	SG12	BL			NO X-CONN REQD FOR BLANK SPACES
VACANT CODE	VC	05 5	S5	SG10	SG10	SG10	SG10	SG10	SG10	SG10	RC12	SG10	SG10	SG10	SG10	SG10	SG10	SG10	RC12	ROA	ROA	
COMB. TONE OVERFLOW	CV	06 6	S6	SG11	SG11	SG11	SG11	SG11	SG11	SG11	RC08	SG11	SG11	SG11	SG11	SG11	SG11	SG11	RC08			NO X-CONN REQD FOR BLANK SPACES
COIN SERVICE	SCG	07 7	S7								CNS								CNS			NO X-CONN REQD FOR BLANK SPACES
CLASS OF SERVICE PEG COUNT	CLC	08 8	S8	PCS0	PCS0	PCS0	PCS1	RCS2	RCS2	PCS2	PCS3	PCS4	PCS4	PCS4	PCS5	PCS6	PCS6	PCS6	PCS7			NO X-CONN REQD FOR BLANK SPACES
HEAVY TRAFFIC PBX	SCG	09 9	S9	HTR				HTR				HTR				HTR						NO X-CONN REQD FOR BLANK SPACES
RINGER TEST CODE	RGTA	10 10	S10	SG09	SG09	SG09	SG09	SG09	SG09	SG09	RC29	SG09	SG09	SG09	SG09	SG09	SG09	SG09	RC29	DR3	DR3	
PERMANENT SIGNAL	RO6	11 11	S11	PP	PN	PN	PN	PP	PN	PN	PM	PP	PN	PN	PN	PP	PN	PN	PM			NO X-CONN REQD FOR BLANK SPACES
(765) (766)	SERVICE RELAY NO.		SORT-2	←	SEE NOTE 3 C127 28	→	29	←	30	→	31	←	36	→	37	←	38	→	39	32	33	
CHARGE 1 1	C253	12 USC 0	S0		SG13		SG13		RC35		RC34		SG13		SG13		RC35		RC34	SG13	RC36	
CHARGE 1 2	R31	13 1	S1		NN		NN		MBS1		DR1		MBS2		DRO		MBS2		DR2	NN	TO	
CHARGE 2 1	R32	14 2	S2		MBS2		DRO		MBS2		DR2		NN		NN		MBS1		DR1	NN	TO	
CHARGE 9 9	RO1	15 3	S3		MBS9		DRO		MBS9		DR2		MBS9		DRO		MBS9		DR2	DR3	TO	
CHARGE 0 0	R24	16 4	S4		MBS0		DRO		MBS0		DR2		MBS0		DRO		MBS0		DR2	DR3	DR3	
TRUNK CLASS SCREENING	USC5	17 5	S5		SG05		RC15		SG06		RC16		SG07		RC18		SC08		RC19	ROA	NN	
		18 6	S6																			
		19 7	S7																			
		20 8	S8																			
		21 9	S9																			

ROUTE RELAY ASSIGNMENTS

00 - 211 (765) NON-COIN
01 - 211 (765) COIN
02 - 211 (766) NON-COIN
03 - 211 (766) COIN
04 - TONE NON-COIN
05 - SPARE
06 - PERMANENT SIGNAL
07 - COMMON OVERFLOW
08 - TONE COIN
09 - SPARE
10 - IAO FR
11 - VACANT CODE NON-COIN
12 - VACANT CODE COIN
13 - COIN JUNCTORS
14 - DIAL "0" (765) PBX, IND, 2P-FR/MR
15 - DIAL "0" (765) 4F
16 - DIAL "0" (765) COIN
17 - DIAL "0" (766) PBX, IND, 2P-FR/MR
18 - DIAL "0" (766) 4F
19 - DIAL "0" (766) COIN
20 - IAO COIN
21 - IAO MR
22 - 811 BUSINESS OFFICE
23 - REVERTING CALL
24 - TANDEM CHARGE 0
25 - TANDEM CHARGE 9
26 - 411-INFORMATION
27 - 611-REPAIR SERVICE
28 - RINGER TEST NON-COIN
29 - RINGER TEST COIN
30 - (253) FLAT RATE
31 - (643)
32 - (222)
33 - (686), (687)
34 - (253) COIN
35 - (253) MR
36 - (253) TOLL

MISCELLANEOUS ASSIGNMENTS USED ON C128 TO C134

CG	XC TO	RG	XC TO	SG	XC TO	RAG	XC TO	DR	
0		0	SC02	00	RC10	0	LR	0	RESTRICTED 4F
1	RSTRCD CODES	1	SC15	01	RC21	1	PB	1	COIN JUNCTOR
2	RC25			02	RC03	2		2	RESTRICTED COIN
				03	NN	3		3	TOLL & TANDEM DENY ROUTE
				04	RC04	4			
				05	RC14				
				06	OS0				
				07	RC17				
				08	OS1				
				09	RC28				
				10	RC11				
				11	RC04				
				12	RC23				
				13	RC30				

ISSUE 3

CLASS OF SERVICE AND SCREENING RELAY CONNECTIONS

SFD-10-01-C125

BELL TELEPHONE LABORATORIES INCORPORATED

DWG SIZE 6S

PRINTED IN U.S.A.

SFD-10-01-C125

E-7421 (10-71)

COMPLETING MARKER
CLASS OF SERVICE GROUPING

CROSS CONNECTION PROVISION FOR OFFICES ARRANGED FOR 30, 60, OR 100 CLASSES OF SERVICE

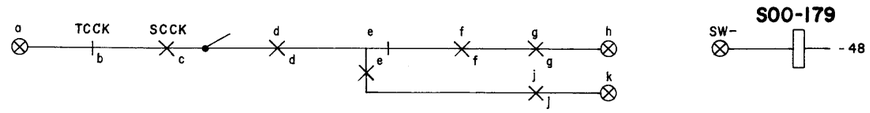

OFF. ARR FOR		CROSS CONNECT	a PCHG	b CONT NO.	c CONT NO.	d REL	d CONT NO.	e REL	e CONT NO.	f REL	f CONT NO.	g REL	g CONT NO.	h PCHG	j REL	j CONT NO.	k PCHG
100 CS	2 SORTS	CGAO	CSA1	2	1	CUA2	5	CUA4	4	CUA7	6	CTAO-4	10	SWC09-49	CTAO-4	7	SWC06-46
						CUA7		CUA0		CUA1			9	SWC08-48		8	SWC07-47
						CUA1		CUA2		CUA4			6	SWC05-45		4	SWC03-43
						CUA4		CUA7		CUA0			5	SWC04-44		1	SWC00-40
						CUA0		CUA1		CUA2			3	SWC02-42		2	SWC01-41
			CSA2	4	3	CUA2	8	CUA4	9	CUA7	7	CTAO-4	22	SWC09-49	CTAO-4	19	SWC06-46
						CUA7		CUA0		CUA1			21	SWC08-48		20	SWC07-47
						CUA1		CUA2		CUA4			18	SWC05-45		16	SWC03-43
						CUA4		CUA7		CUA0			17	SWC04-44		13	SWC00-40
						CUA0		CUA1		CUA2			15	SWC02-42		14	SWC01-41
	4 SORTS	CGBO	CSB1	7	6	SSU2	5	SSU4	4	SSU7	6	CTA5-9	10	SWC59-99	CTA5-9	7	SWC56-96
						SSU7		SSU0		SSU1			9	SWC58-98		8	SWC57-97
						SSU1		SSU2		SSU4			6	SWC55-95		4	SWC53-93
						SSU4		SSU7		SSU0			5	SWC54-94		1	SWC50-90
						SSU0		SSU1		SSU2			3	SWC52-92		2	SWC51-91
			CSB2	8	11	SSU2	8	SSU4	9	SSU7	7	CTA5-9	22	SWC59-99	CTA5-9	19	SWC56-96
						SSU7		SSU0		SSU1			21	SWC58-98		20	SWC57-97
						SSU1		SSU2		SSU4			18	SWC55-95		16	SWC53-93
						SSU4		SSU7		SSU0			17	SWC54-94		13	SWC50-90
						SSU0		SSU1		SSU2			15	SWC52-92		14	SWC51-91
30 CS	2 SORTS	CGAO	CSA1	2	1	CUA2	5	CUA4	4	CUA7	6	CTAO-2	10	SWC09-29	CTAO-2	7	SWC06-26
						CUA7		CUA0		CUA1			9	SWC08-28		8	SWC07-27
						CUA1		CUA2		CUA4			6	SWC05-25		4	SWC03-23
						CUA4		CUA7		CUA0			5	SWC04-24		1	SWC00-20
						CUA0		CUA1		CUA2			3	SWC02-22		2	SWC01-21
			CSA2	4	3	CUA2	8	CUA4	9	CUA7	7	CTAO-2	22	SWC09-29	CTAO-2	19	SWC06-26
						CUA7		CUA0		CUA1			21	SWC08-28		20	SWC07-27
						CUA1		CUA2		CUA4			18	SWC05-25		16	SWC03-23
						CUA4		CUA7		CUA0			17	SWC04-24		13	SWC00-20
						CUA0		CUA1		CUA2			15	SWC02-22		14	SWC01-21
	4 SORTS (SEE NOTE 2)	CGBO	CSB1	7	6	CUB2	5	CUB4	4	CUB7	6	CTBO-2	10	SWC09-29	CTBO-2	7	SWC06-26
						CUB7		CUB0		CUB1			9	SWC08-28		8	SWC07-27
						CUB1		CUB2		CUB4			6	SWC05-25		4	SWC03-23
						CUB4		CUB7		CUB0			5	SWC04-24		1	SWC00-20
						CUB0		CUB1		CUB2			3	SWC02-22		2	SWC01-21
			CSB2	8	11	CUB2	8	CUB4	9	CUB7	7	CTBO-2	22	SWC09-29	CTBO-2	19	SWC06-26
						CUB7		CUB0		CUB1			21	SWC08-28		20	SWC07-27
						CUB1		CUB2		CUB4			18	SWC05-25		16	SWC03-23
						CUB4		CUB7		CUB0			17	SWC04-24		13	SWC00-20
						CUB0		CUB1		CUB2			15	SWC02-22		14	SWC01-21
60 CS 2 SORTS (SEE NOTE 1)		CGA CGA1	CSA1	2	1	CUA2	5	CUA4	4	CUA7	6	CTAO-2	10	SWC09-29	CTAO-2	7	SWC06-26
						CUA7		CUA0		CUA1			9	SWC08-28		8	SWC07-27
						CUA1		CUA2		CUA4			6	SWC05-25		4	SWC03-23
						CUA4		CUA7		CUA0			5	SWC04-24		1	SWC00-20
						CUA0		CUA1		CUA2			3	SWC02-22		2	SWC01-21
		CGA CGA2	CSA2	4	3	CUA2	8	CUA4	9	CUA7	7	CTAO-2	22	SWC09-29	CTAO-2	19	SWC06-26
						CUA7		CUA0		CUA1			21	SWC08-28		20	SWC07-27
						CUA1		CUA2		CUA4			18	SWC05-25		16	SWC03-23
						CUA4		CUA7		CUA0			17	SWC04-24		13	SWC00-20
						CUA0		CUA1		CUA2			15	SWC02-22		14	SWC01-21
		CGB CGB1	CSB1	7	6	CUB2	5	CUB4	4	CUB7	6	CTBO-2	10	SWC09-29	CTBO-2	7	SWC06-26
						CUB7		CUB0		CUB1			9	SWC08-28		8	SWC07-27
						CUB1		CUB2		CUB4			6	SWC05-25		4	SWC03-23
						CUB4		CUB7		CUB0			5	SWC04-24		1	SWC00-20
						CUB0		CUB1		CUB2			3	SWC02-22		2	SWC01-21
		CGB CGB2	CSB2	8	11	CUB2	8	CUB4	9	CUB7	7	CTBO-2	22	SWC09-29	CTBO-2	19	SWC06-26
						CUB7		CUB0		CUB1			21	SWC08-28		20	SWC07-27
						CUB1		CUB2		CUB4			18	SWC05-25		16	SWC03-23
						CUB4		CUB7		CUB0			17	SWC04-24		13	SWC00-20
						CUB0		CUB1		CUB2			15	SWC02-22		14	SWC01-21

TYPICAL CROSS CONNECTION PER TABLE ON C125 AND C127

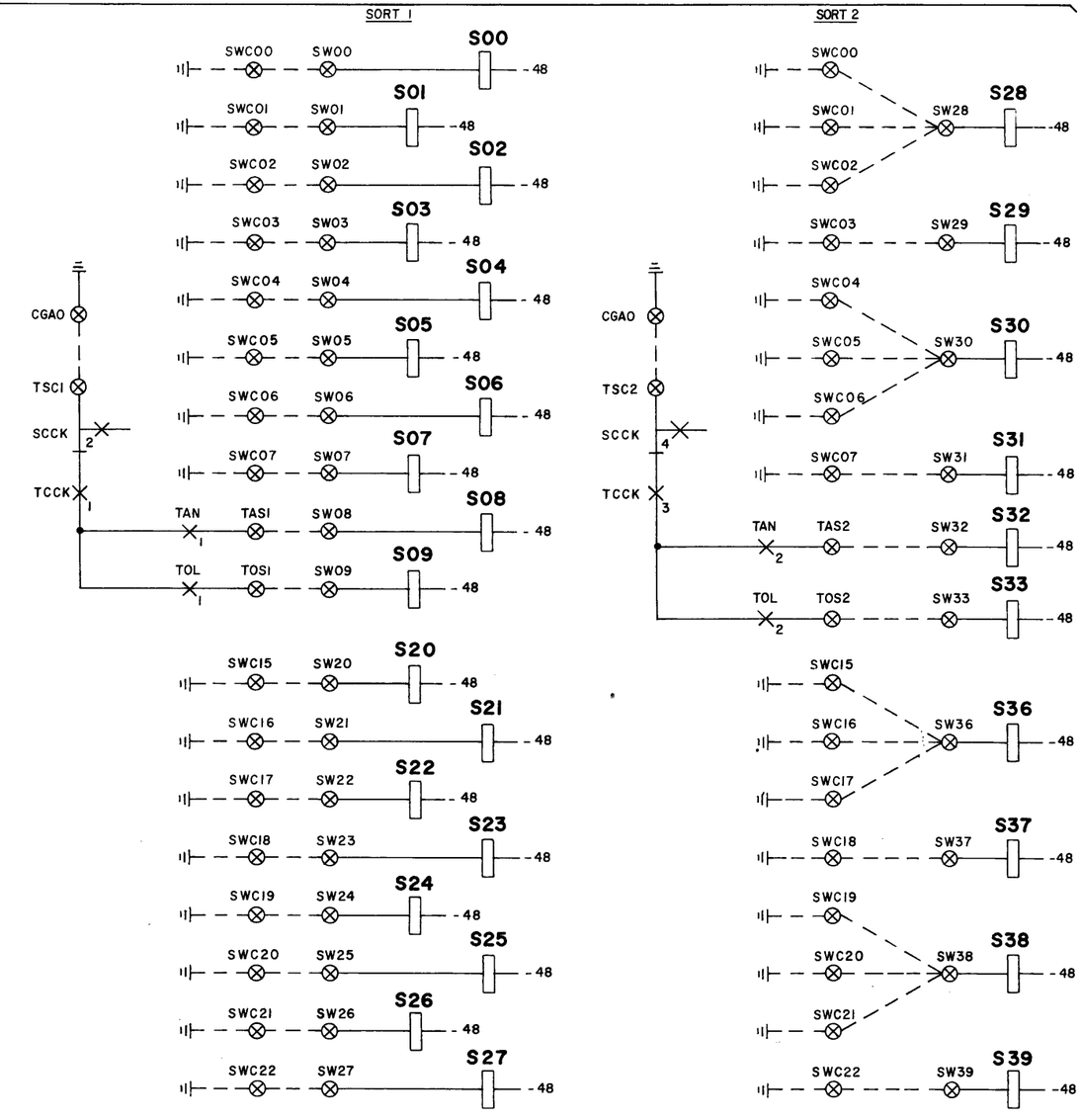

SHEET NOTES:

1. INCREASING 30 CLASSES OF SERVICE TO 60 CLASSES OF SERVICE WITH TWO SORTS, IS DONE ON AN (A&M) BASIS.
2. INCREASING THE NUMBER OF SORTS TO FOUR FOR 30 CLASSES OF SERVICE, IS DONE ON AN (A&M) BASIS.

ISSUE 4

SFD-10-01-C126

CLASS OF SERVICE AND SCREENING RELAYS CONNECTIONS

DWG SIZE 6S

BELL TELEPHONE LABORATORIES INCORPORATED

PRINTED IN U. S. A.

E-7421-L (4-73)

SFD-10-01-C126

COMPLETING MARKER

180 S- RELAYS WIRED IN MULTIPLE GROUPS OF 4 RELAYS TO A GROUP SCREENING RELAYS S-00 TO S-03 AND S-176 TO S-179 ARE SHOWN. OTHER GROUPS ARE MULTIPLED IN THE SAME WAY.

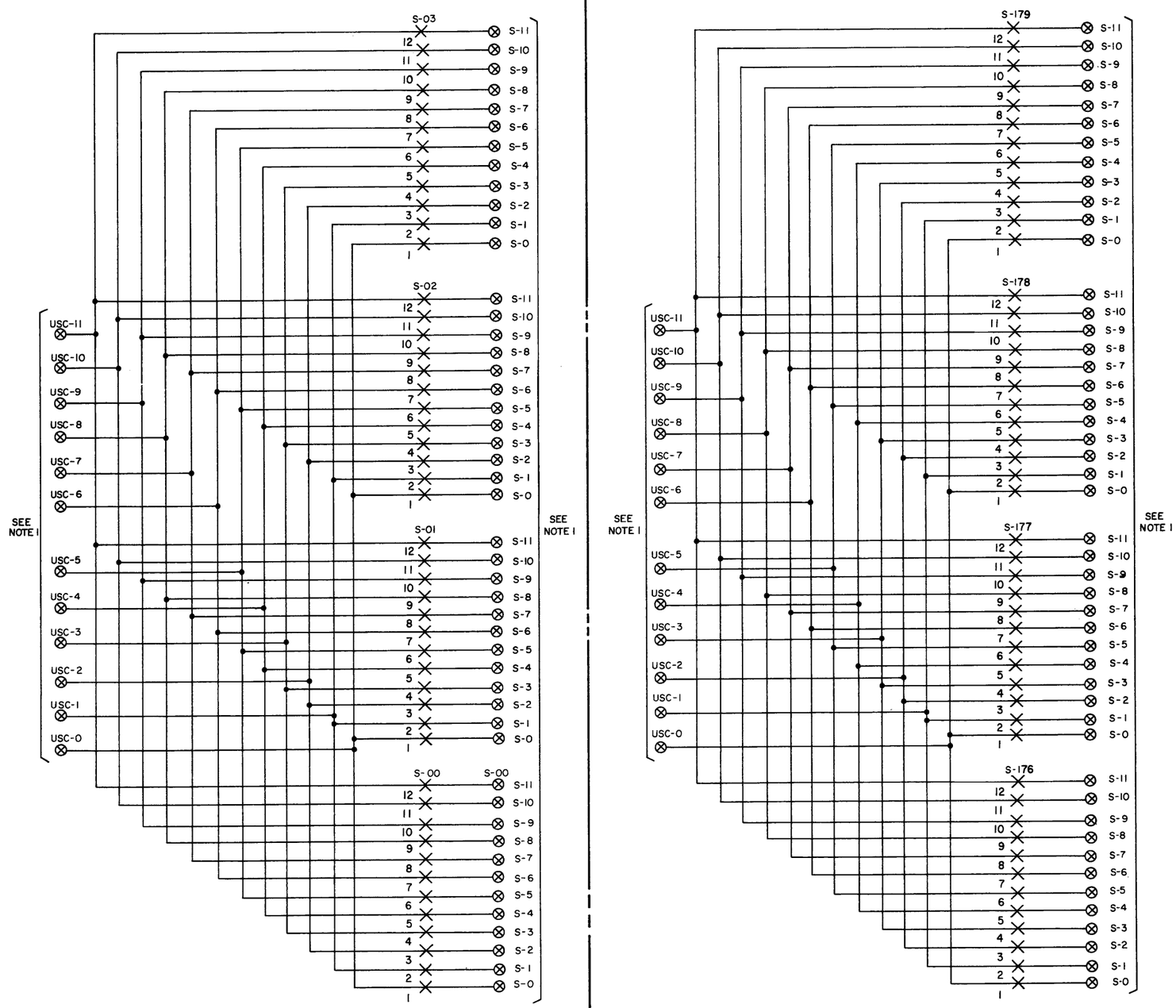

MULTIPLE OF S-RELAY CONTACTS

S-RELAYS	S-RELAYS	S-RELAYS	S-RELAYS	S-RELAYS
0-3	40-43	80-83	120-123	160-163
4-7	44-47	84-87	124-127	164-167
8-11	48-51	88-91	128-131	168-171
12-15	52-55	92-95	132-135	172-175
16-19	56-59	96-99	136-139	176-179
20-23	60-63	100-103	140-143	
24-27	64-67	104-107	144-147	
28-31	68-71	108-111	148-151	
32-35	72-75	112-115	152-155	
36-39	76-79	116-119	156-159	

S0-59 - LOCATED ON TRANSLATOR & CODE TREATMENT FR

S60-119 - LOCATED ON SUPPLEMENTARY SRV TREATMENT FR

S120-179 - LOCATED ON AUX SUPPLEMENTARY SRV TREATMENT FR

TYPICAL CLASS OF SERVICE TO S-RELAY ASSIGNMENTS
TWO CENTRAL OFFICES - 765 & 766

CS NO.	CLASS OF SERVICE	S-RELAY SW NO.	CROSS-CONNECT SW-	TO SWCA-	SC GRP
00	765 PBXF	00	SORT-1	SWC- 0	0-11
01	765 1F	01	SORT-1	SWC- 1	0-11
02	765 2F	02	SORT-1	SWC- 2	0-11
03	765 4F	03	SORT-1	SWC- 3	0-11
04	765 PBXMR	04	SORT-1	SWC- 4	0-11
05	765 1MR	05	SORT-1	SWC- 5	0-11
06	765 2MR	06	SORT-1	SWC- 6	0-11
07	765 CN	07	SORT-1	SWC- 7	0-11
08	TANDEM	08	SORT-1	TA- 1	0-11
09	TOLL	09	SORT-1	TO- 1	0-11
15	766 PBXF	20	SORT-1	SWC-15	0-11
16	766 1F	21	SORT-1	SWC-16	0-11
17	766 2F	22	SORT-1	SWC-17	0-11
18	766 4F	23	SORT-1	SWC-18	0-11
19	766 PBXMR	24	SORT-1	SWC-19	0-11
20	766 1MR	25	SORT-1	SWC-20	0-11
21	766 2MR	26	SORT-1	SWC-21	0-11
22	766 CN	27	SORT-1	SWC-22	0-11
	765 00-02	28	SORT-2	SWC- 0-2	12-23
	765 03	29	SORT-2	SWC- 3	12-23
	765 04-06	30	SORT-2	SWC- 4-6	12-23
	765 07	31	SORT-2	SWC- 7	12-23
	765 08	32	SORT-2	TA- 2	12-23
	765 09	33	SORT-2	TO- 2	12-23
	766 15-17	36	SORT-2	SWC-15-17	12-23
	766 18	37	SORT-2	SWC-18	12-23
	766 19-21	38	SORT-2	SWC-19-21	12-23
	766 22	39	SORT-2	SWC-22	12-23

SEE NOTE 2

SHEET NOTES:

1. FOR CROSS-CONNECTIONS TO S- AND USC- PUNCHINGS SEE C128 TO C134.
2. IN SORT 2, THOSE CLASSES OF SERVICE WHICH RECEIVE THE SAME ROUTE SERIES TREATMENT ARE GROUPED. FOR EXAMPLE; 765 PBXF, 1F, 2F ALL USE S-28 SCREENING RELAY IN SORT 2.
3. RELAY S28 SERVES 765 CLASSES PBXF, 1F, 2F. RELAYS S30, S36, S38 ALSO SERVE THREE CLASSES EACH.
4. CROSS-CONNECT CSA1 TO CGA1 AND CSA2 TO CGA2 WHEN SIXTY CLASSES OF SERVICE ARE PROVIDED. FOR THIRTY CLASSES OF SERVICE, CROSS-CONNECT CSA1 TO CGA0 AND CSA2 TO CGA0.

ISSUE 3

CLASS OF SERVICE
AND
SCREENING RELAY CONNECTIONS

SFD-10-01-C127

BELL TELEPHONE LABORATORIES INCORPORATED

DWG SIZE 6S

PRINTED IN U. S. A.

SFD-10-01-C127

E-7481 (10-71)

COMPLETING MARKER

TYPICAL ROUTE RELAY CROSS CONNECTIONS FOR INTRA OFFICE ROUTE. SEPARATE INTRA OFFICE TRUNKS USED FOR FLAT RATE, MESSAGE RATE (AMA), AND COIN SERVICE

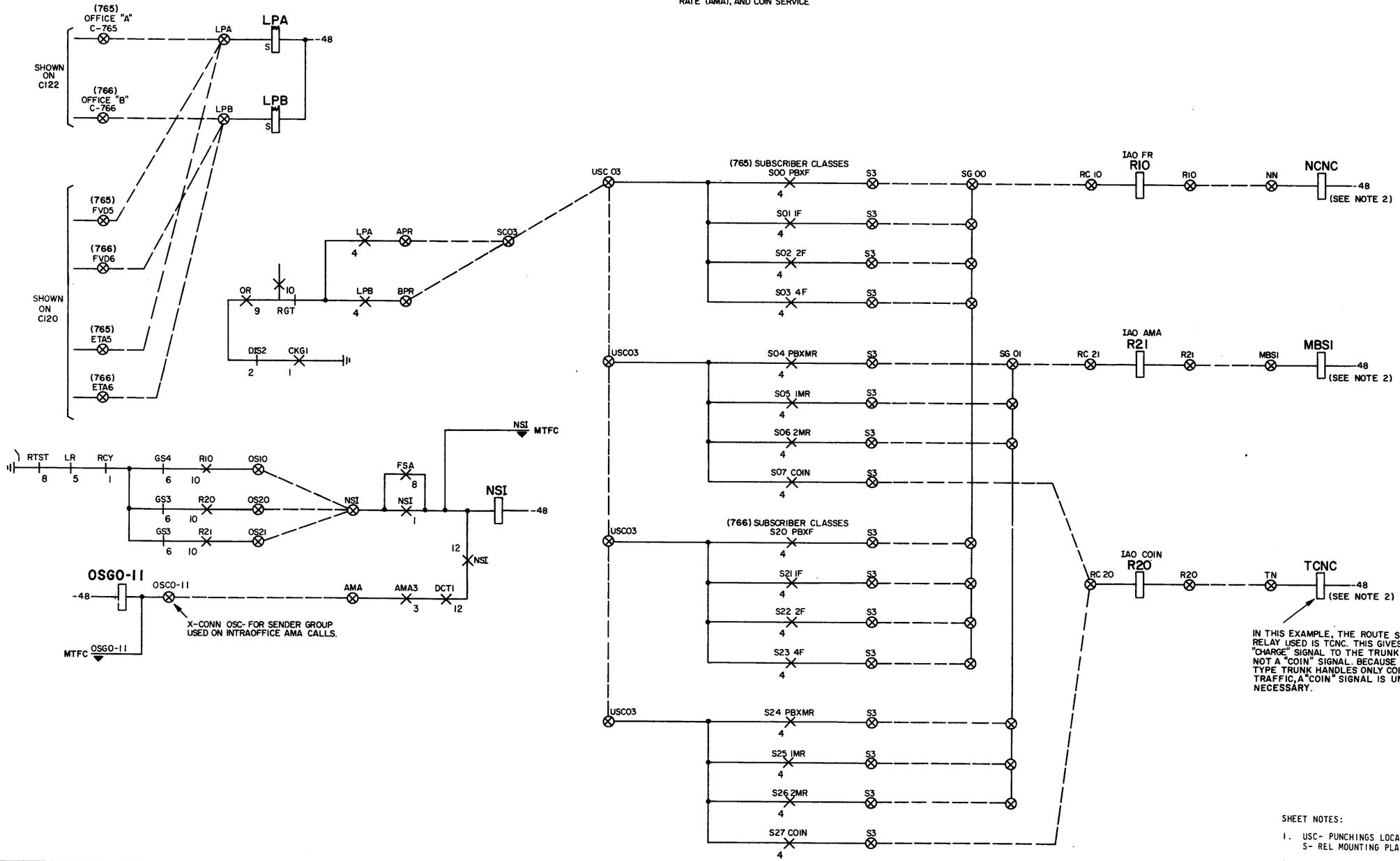

SHEET NOTES:

1. USC- PUNCHINGS LOCATED ON S- REL MOUNTING PLATES.
2. DIRECT BAT. SHOWN FOR RB TERM. AND FOR ROUTE SERIES RELAYS HAVE BEEN REPLACED AS STD BY BAT. THROUGH BALLAST LAMPS (SEE C119/B8).

ISSUE 4

SFD-10-01-C128

TYPICAL ROUTE, ROUTE RELAY AND ROUTE SERIES RELAY CROSS CONNECTIONS

DWG SIZE 6S

BELL TELEPHONE LABORATORIES INCORPORATED

PRINTED IN U.S.A.

E-24251-L (4-72)

SFD-10-01-C128

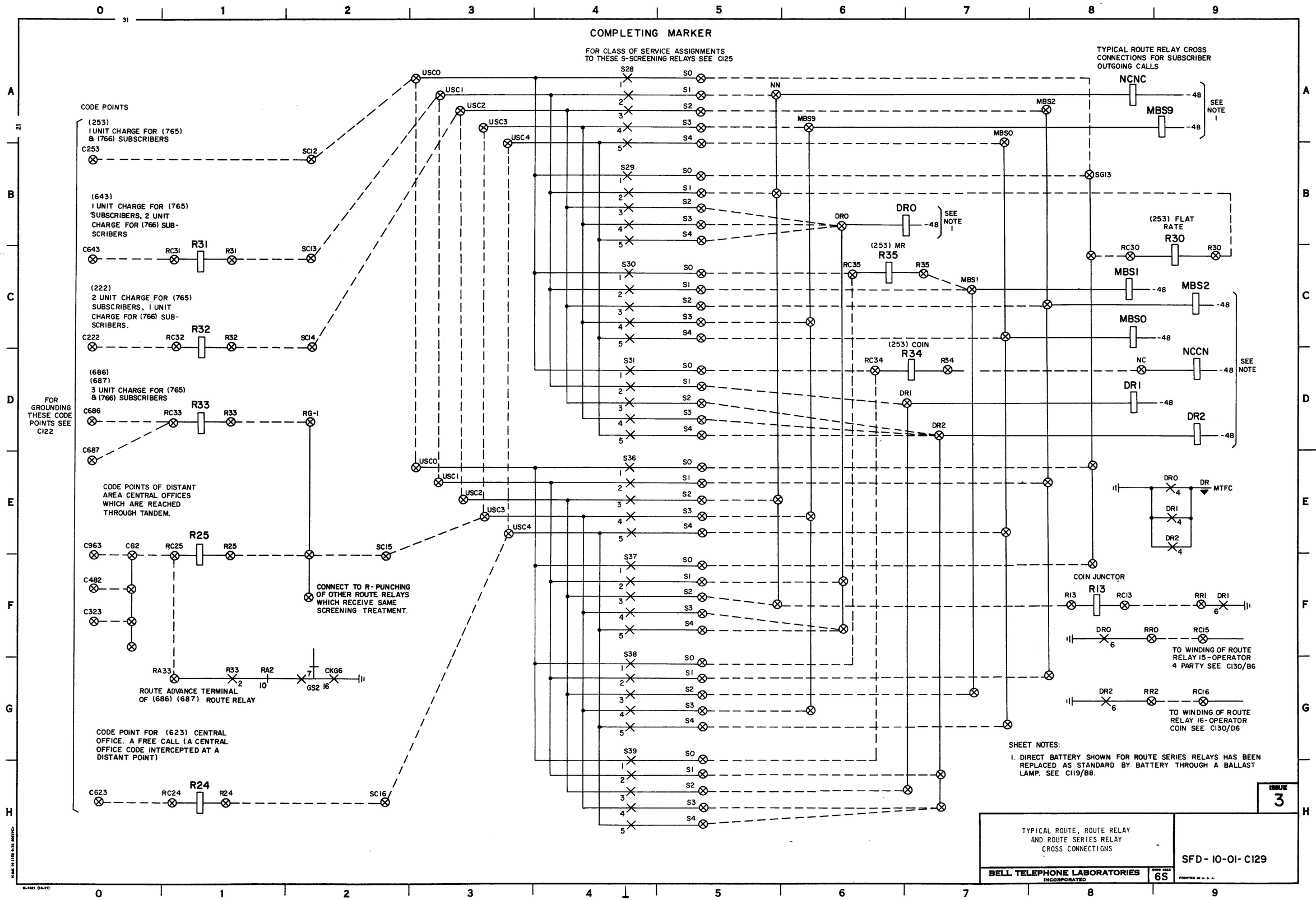

SFD-10-01-C129

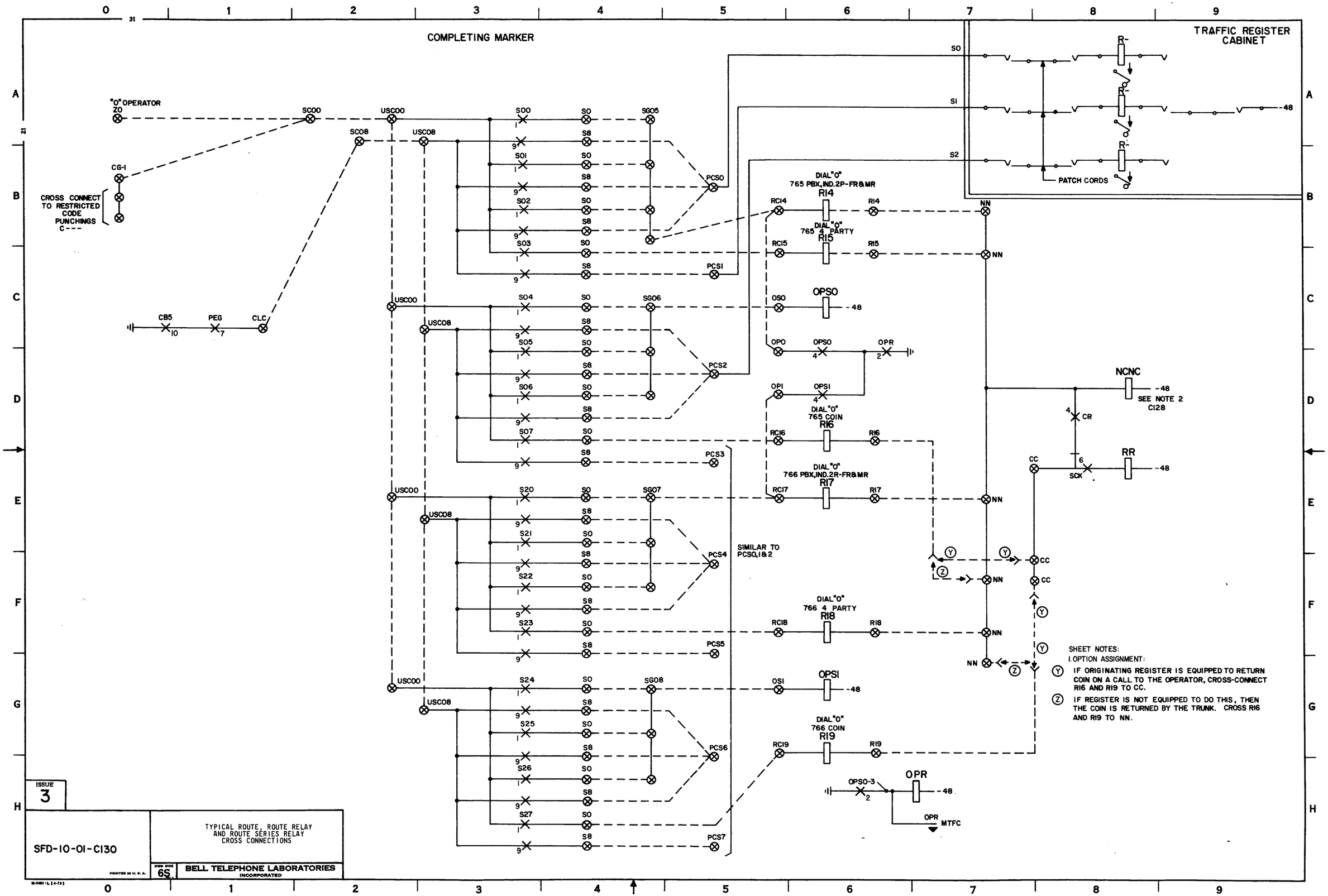
COMPLETING MARKER
TRAFFIC REGISTER CABINET
"0" OPERATOR
ZO
CG-1
CROSS CONNECT TO RESTRICTED CODE PUNCHINGS C---
CB5
PEG
CLC
SCO0
SCO8
USCO0
USCO8
SO0
SO1
SO2
SO3
SO4
SO5
SO6
SO7
S20
S21
S22
S23
S24
S25
S26
S27
SO
S8
SG05
SG06
SG07
SG08
PCSO
PCS1
PCS2
PCS3
PCS4
PCS5
PCS6
PCS7
SIMILAR TO PCSO,1&2
SO
S1
S2
R-
PATCH CORDS
-48
DIAL "0" 765 PBX,IND.2P-FR&MR
R14
RCI4
RI4
DIAL "0" 765 4 PARTY
R15
RCI5
RI5
OPSO
OSO
OPO
OPR
OPI
OPSI
DIAL "0" 765 COIN
R16
RCI6
RI6
DIAL "0" 766 PBX,IND.2R-FR&MR
R17
RCI7
RI7
DIAL "0" 766 4 PARTY
R18
RCI8
RI8
OSI
DIAL "0" 766 COIN
R19
RCI9
RI9
OPSO-3
OPR
MTFC
NN
NCNC
SEE NOTE 2 C128
CR
RR
SCK
CC
Y
Z
SHEET NOTES:
1. OPTION ASSIGNMENT:
Y IF ORIGINATING REGISTER IS EQUIPPED TO RETURN COIN ON A CALL TO THE OPERATOR, CROSS-CONNECT RI6 AND RI9 TO CC.
Z IF REGISTER IS NOT EQUIPPED TO DO THIS, THEN THE COIN IS RETURNED BY THE TRUNK. CROSS RI6 AND RI9 TO NN.
ISSUE 3
SFD-10-01-C130
TYPICAL ROUTE, ROUTE RELAY AND ROUTE SERIES RELAY CROSS CONNECTIONS
DWG SIZE 6S
BELL TELEPHONE LABORATORIES INCORPORATED
PRINTED IN U.S.A.
S-2481-L (4-72)
SFD-10-01-C130

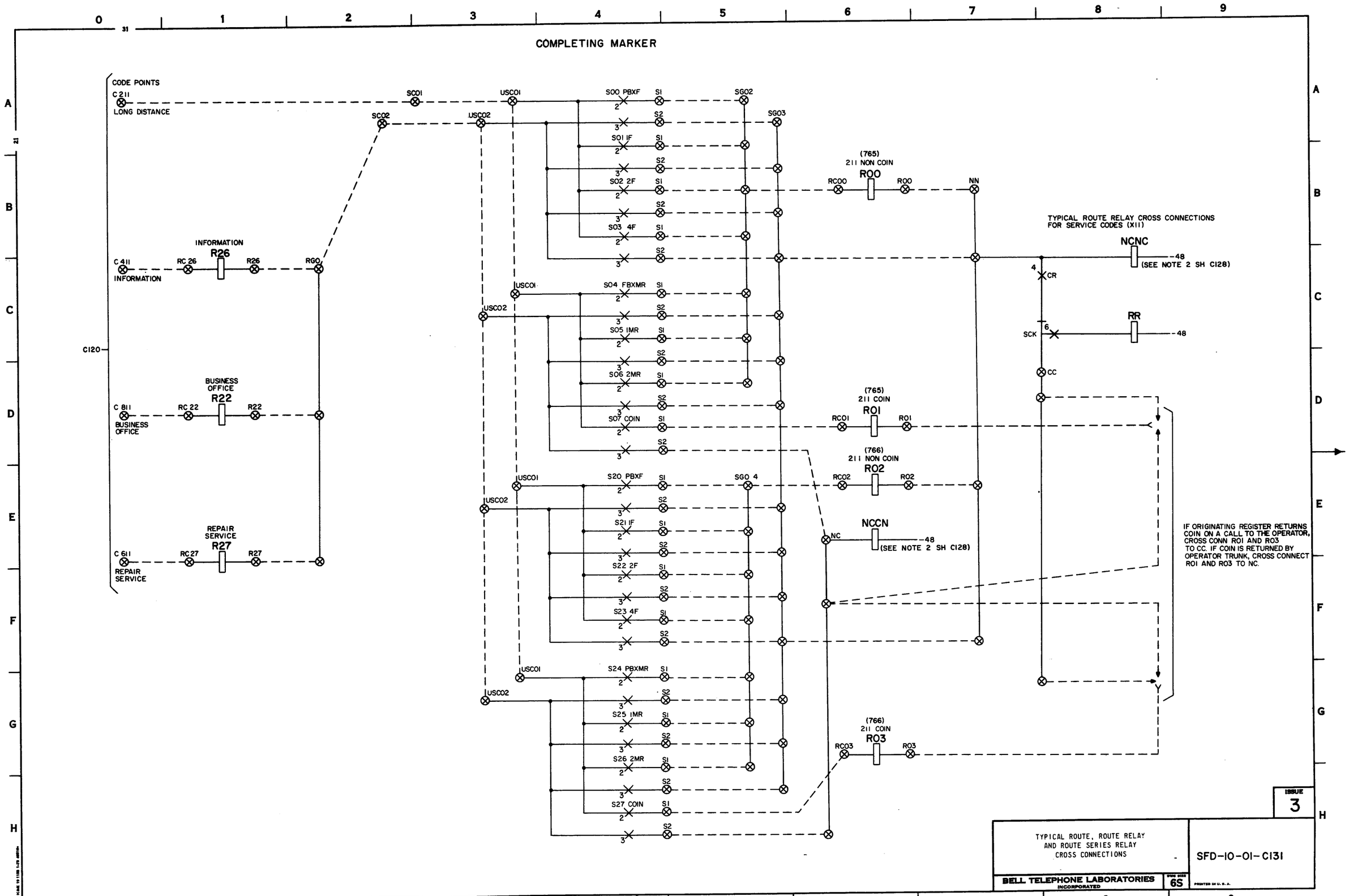

SFD-10-01-C131

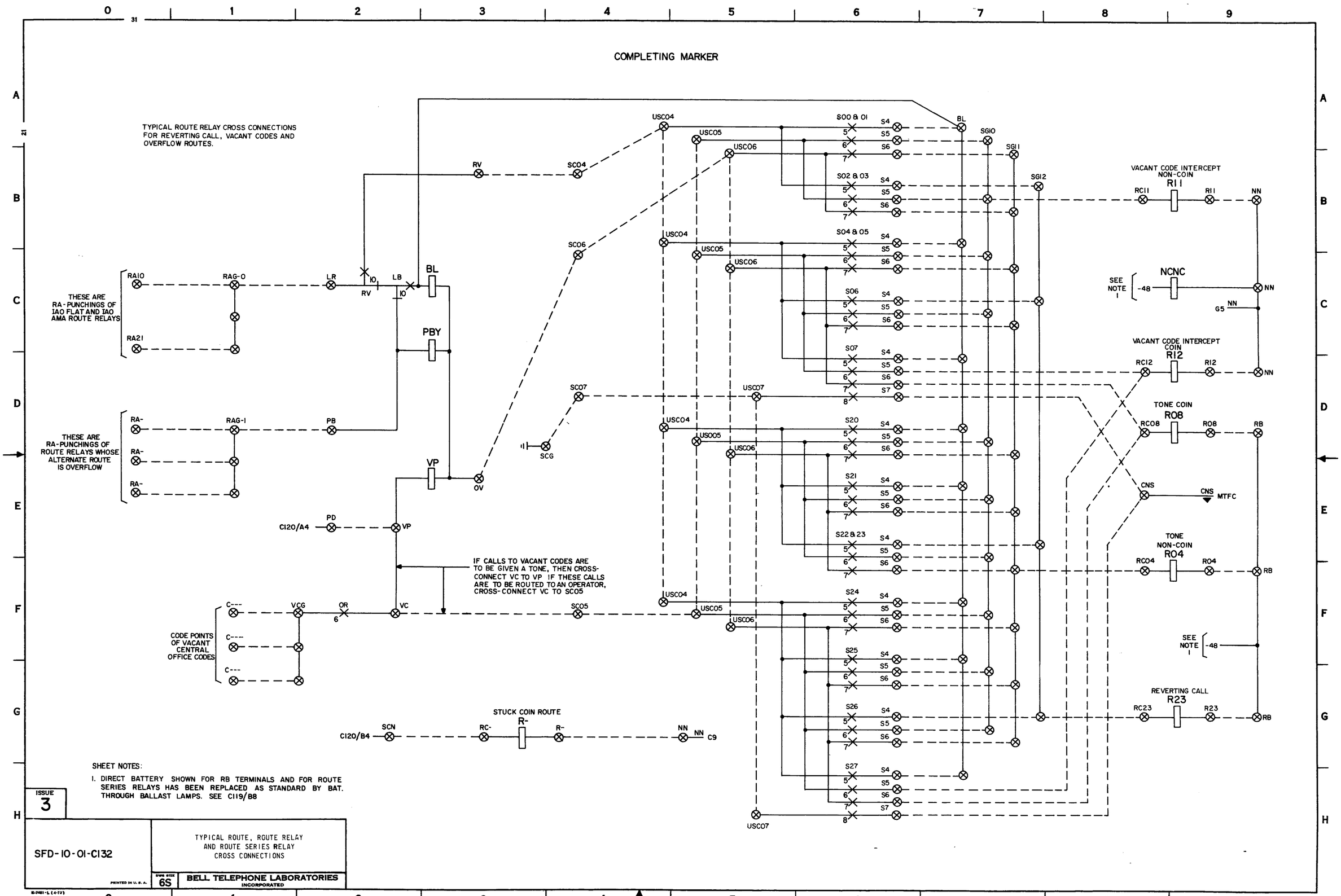
COMPLETING MARKER
TYPICAL ROUTE RELAY CROSS CONNECTIONS FOR REVERTING CALL, VACANT CODES AND OVERFLOW ROUTES.
THESE ARE RA-PUNCHINGS OF IAO FLAT AND IAO AMA ROUTE RELAYS
RA10
RA21
RAG-0
LR
RV
LB
BL
PBY
THESE ARE RA-PUNCHINGS OF ROUTE RELAYS WHOSE ALTERNATE ROUTE IS OVERFLOW
RA-
RAG-1
PB
VP
OV
C120/A4
PD
IF CALLS TO VACANT CODES ARE TO BE GIVEN A TONE, THEN CROSS-CONNECT VC TO VP IF THESE CALLS ARE TO BE ROUTED TO AN OPERATOR, CROSS-CONNECT VC TO SC05
CODE POINTS OF VACANT CENTRAL OFFICE CODES
C---
VCG
OR
VC
SC04
SC05
SC06
SC07
SCG
USC04
USC05
USC06
USC07
S00 & 01
S02 & 03
S04 & 05
S06
S07
S20
S21
S22 & 23
S24
S25
S26
S27
SGI0
SGI1
SGI2
VACANT CODE INTERCEPT NON-COIN
RI1
RC11
NN
SEE NOTE 1
NCNC
-48
G5
VACANT CODE INTERCEPT COIN
RI2
RC12
TONE COIN
RO8
RC08
RB
CNS
MTFC
TONE NON-COIN
RO4
RC04
REVERTING CALL
R23
RC23
STUCK COIN ROUTE
R-
RC-
C120/B4
SCN
C9
SHEET NOTES:
1. DIRECT BATTERY SHOWN FOR RB TERMINALS AND FOR ROUTE SERIES RELAYS HAS BEEN REPLACED AS STANDARD BY BAT. THROUGH BALLAST LAMPS. SEE C119/B8
ISSUE 3
SFD-10-01-C132
TYPICAL ROUTE, ROUTE RELAY AND ROUTE SERIES RELAY CROSS CONNECTIONS
DWG SIZE 6S
BELL TELEPHONE LABORATORIES INCORPORATED
PRINTED IN U.S.A.
E-7481-L (4-72)
SFD-10-01-C132

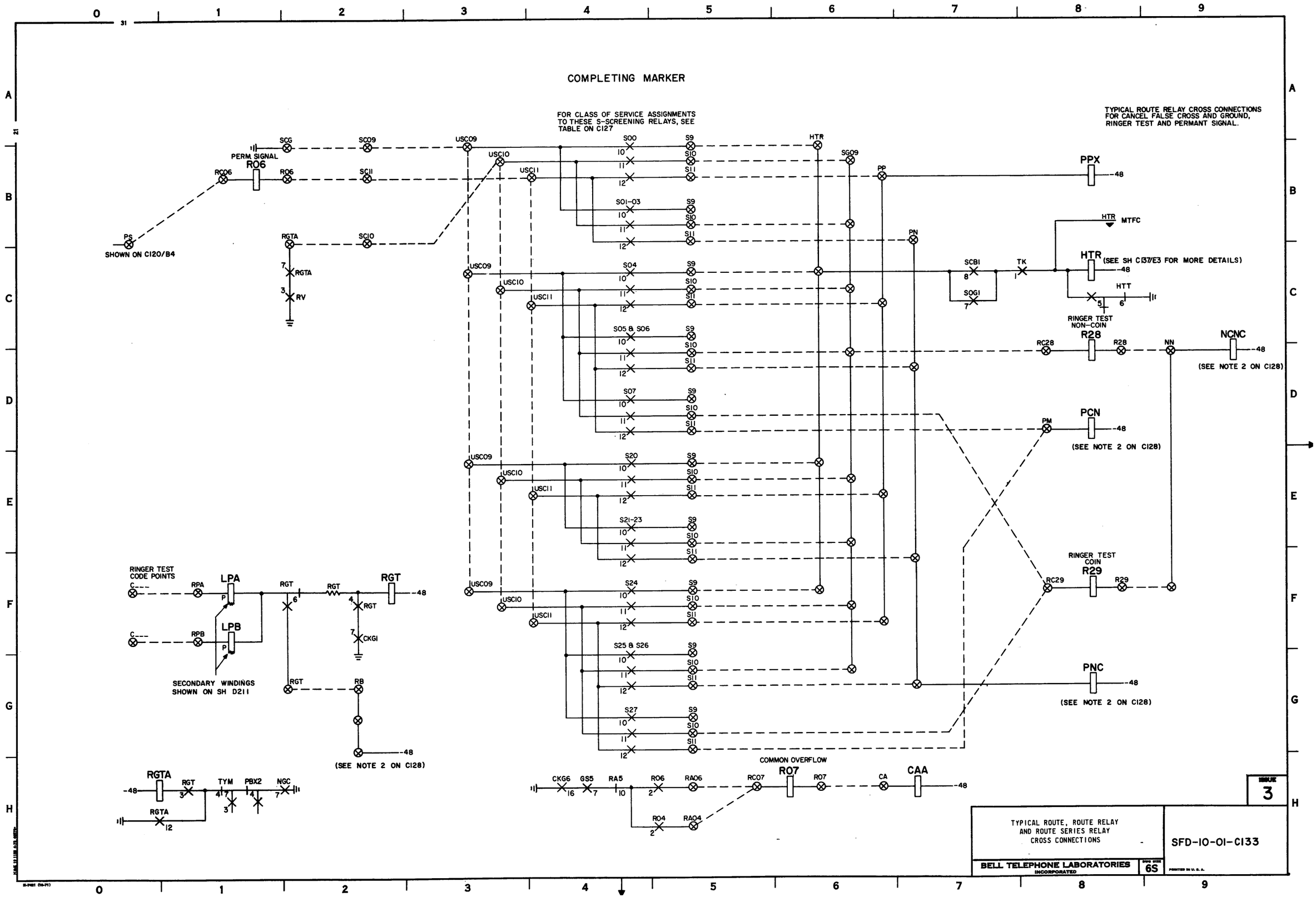

SFD-10-01-C133

COMPLETING MARKER

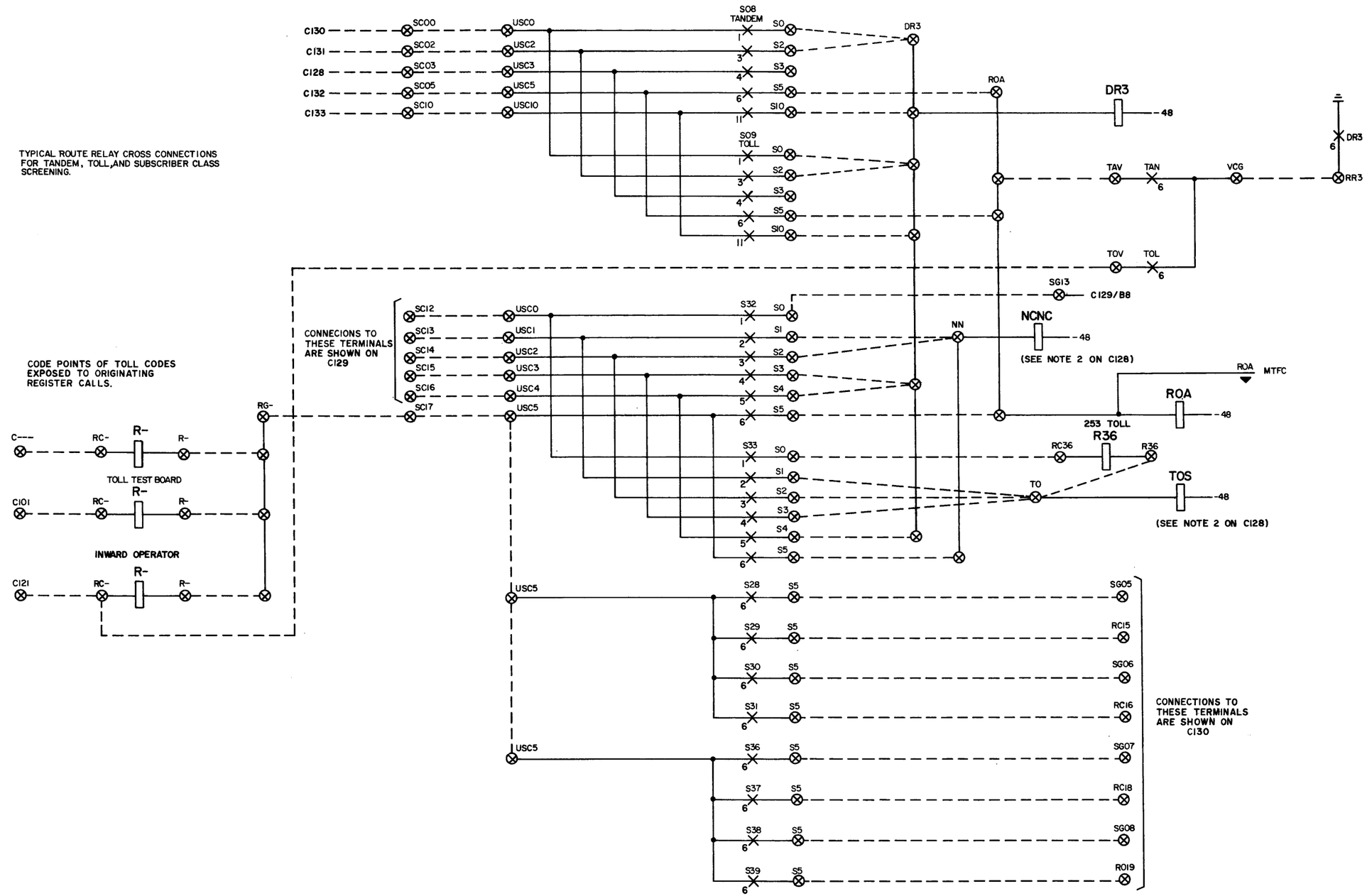

ISSUE 4

SFD-10-01-C134

TYPICAL ROUTE, ROUTE RELAY AND ROUTE SERIES RELAY CROSS CONNECTIONS

DWG SIZE 6S

BELL TELEPHONE LABORATORIES INCORPORATED

PRINTED IN U.S.A.

SFD-10-01-C134

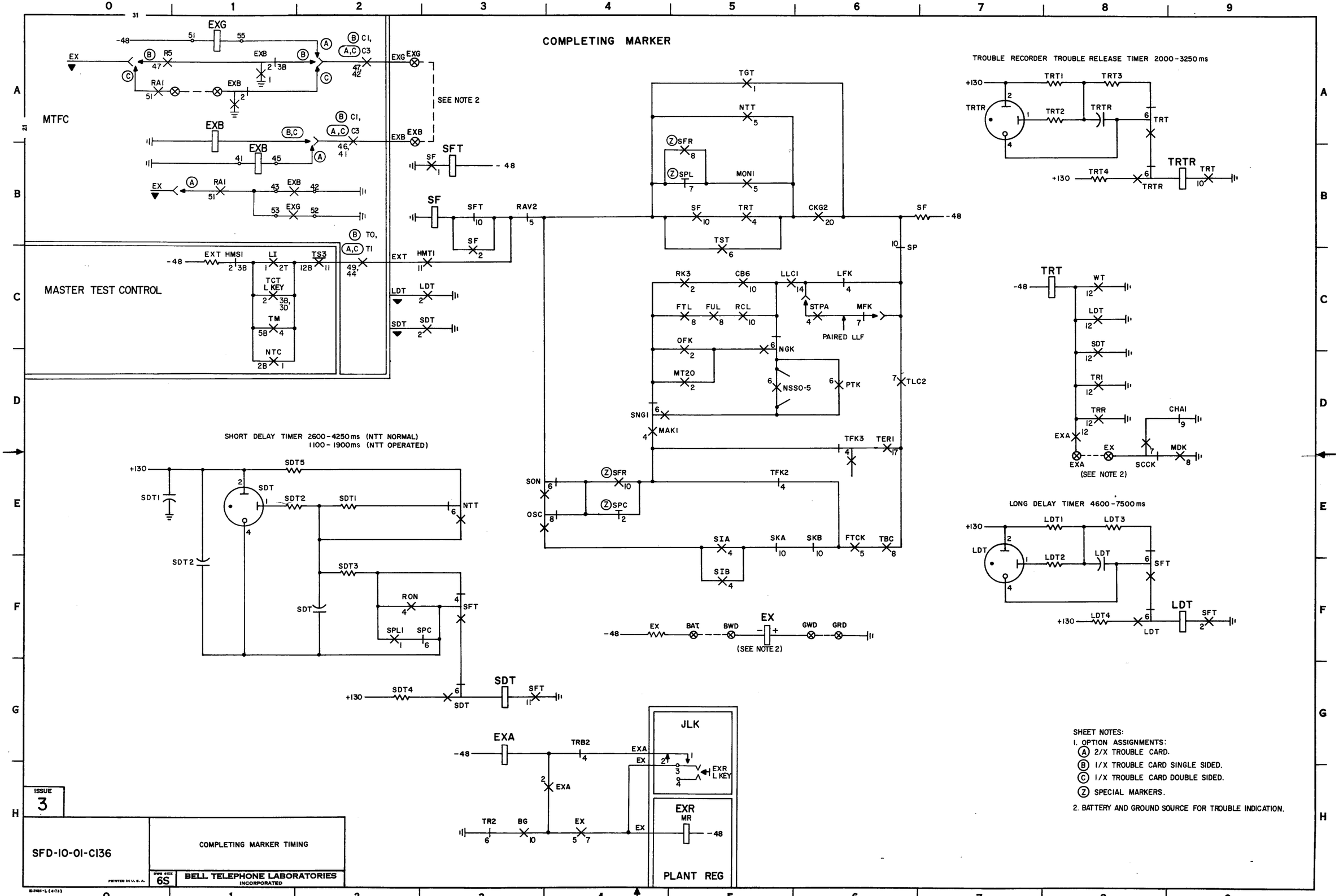
COMPLETING MARKER
MTFC
MASTER TEST CONTROL
SEE NOTE 2
TROUBLE RECORDER TROUBLE RELEASE TIMER 2000-3250 ms
SHORT DELAY TIMER 2600-4250 ms (NTT NORMAL)
1100-1900 ms (NTT OPERATED)
LONG DELAY TIMER 4600-7500 ms
PAIRED LLF
(SEE NOTE 2)
JLK
EXR
PLANT REG
SHEET NOTES:
1. OPTION ASSIGNMENTS:
(A) 2/X TROUBLE CARD.
(B) 1/X TROUBLE CARD SINGLE SIDED.
(C) 1/X TROUBLE CARD DOUBLE SIDED.
(Z) SPECIAL MARKERS.
2. BATTERY AND GROUND SOURCE FOR TROUBLE INDICATION.
ISSUE 3
SFD-10-01-C136
COMPLETING MARKER TIMING
BELL TELEPHONE LABORATORIES INCORPORATED
6S
SFD-10-01-C136

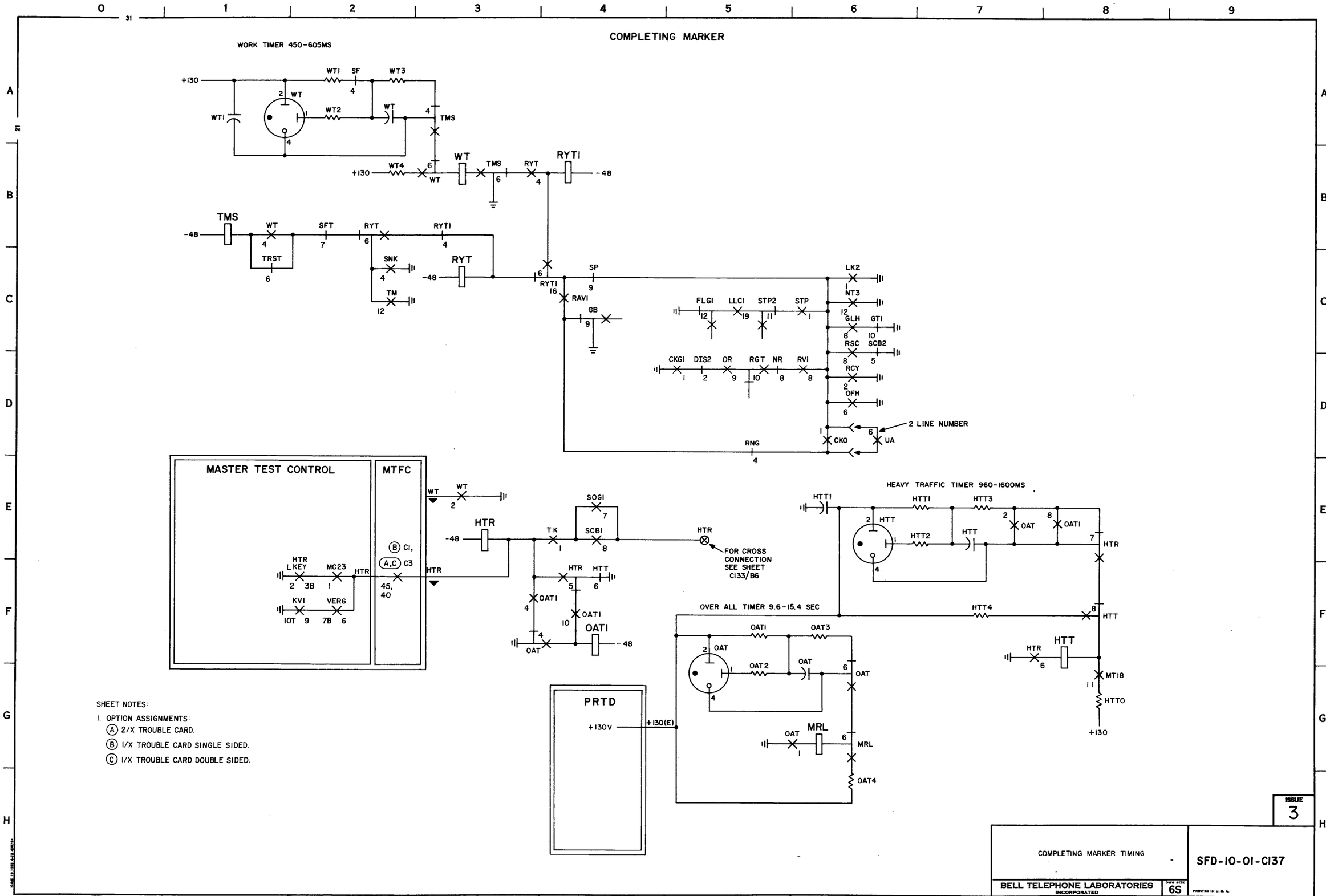

SFD-10-01-C137

LONG DELAY (LDT) & SHORT DELAY TIMING (SFT) CYCLES ON A SUBSCRIBER OUTGOING CALL (SOG)
WITH A SENDER (SON) OR WITHOUT A SENDER (NSO)

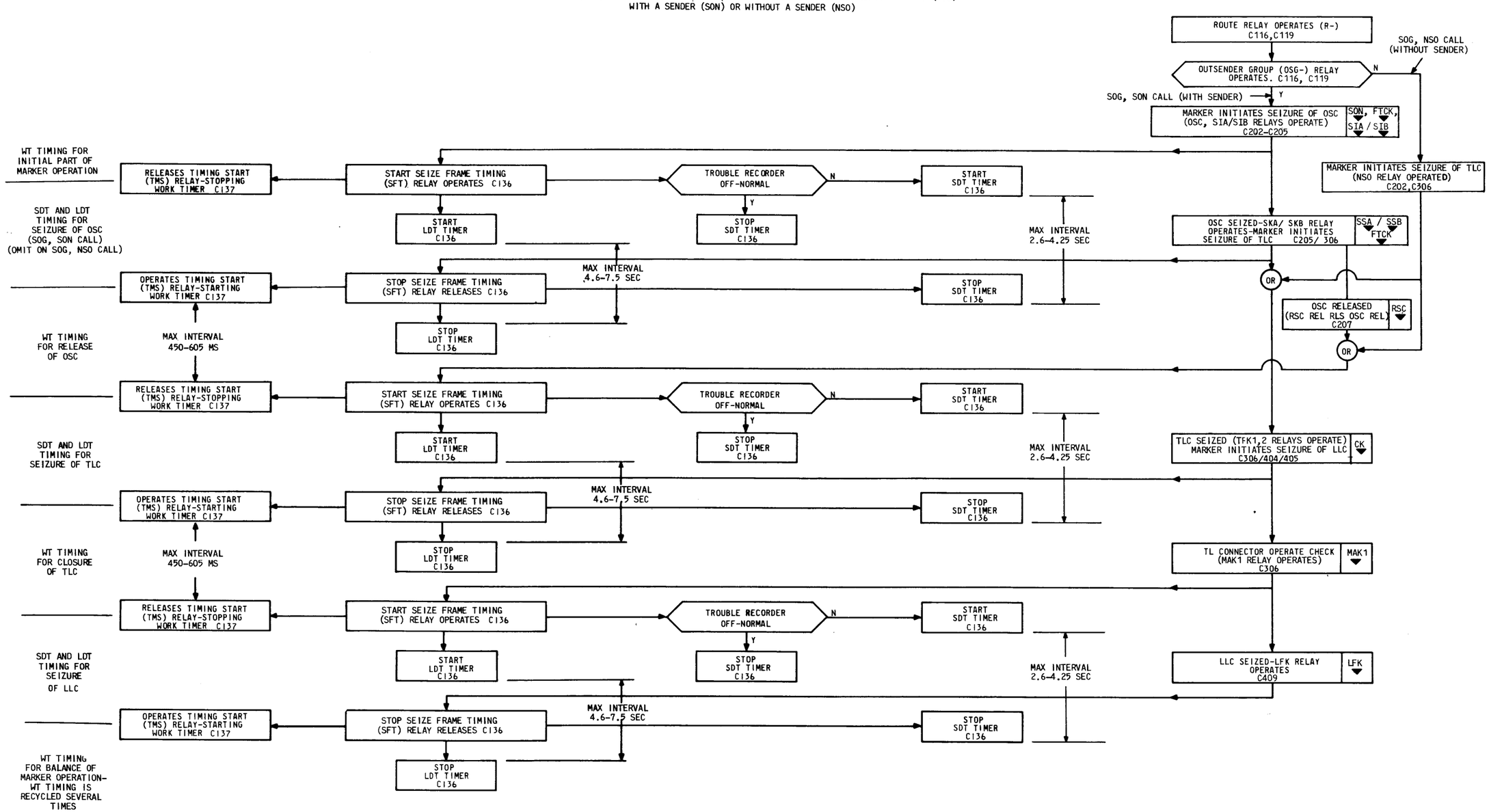

ISSUE 5

SFD-10-01-C138

FLOW CHART
LONG DELAY (LDT) & SHORT DELAY (SDT)
TIMING CYCLES

DWG SIZE 6S

BELL TELEPHONE LABORATORIES INCORPORATED

PRINTED IN U. S. A.

SFD-10-01-C138

ORIGINATING REGISTER MARKER CONNECTOR-A

(ALL REFERENCES ARE TO ORIGINATING REGISTERS AND PC ASSOCIATED WITH THIS CONNECTOR)

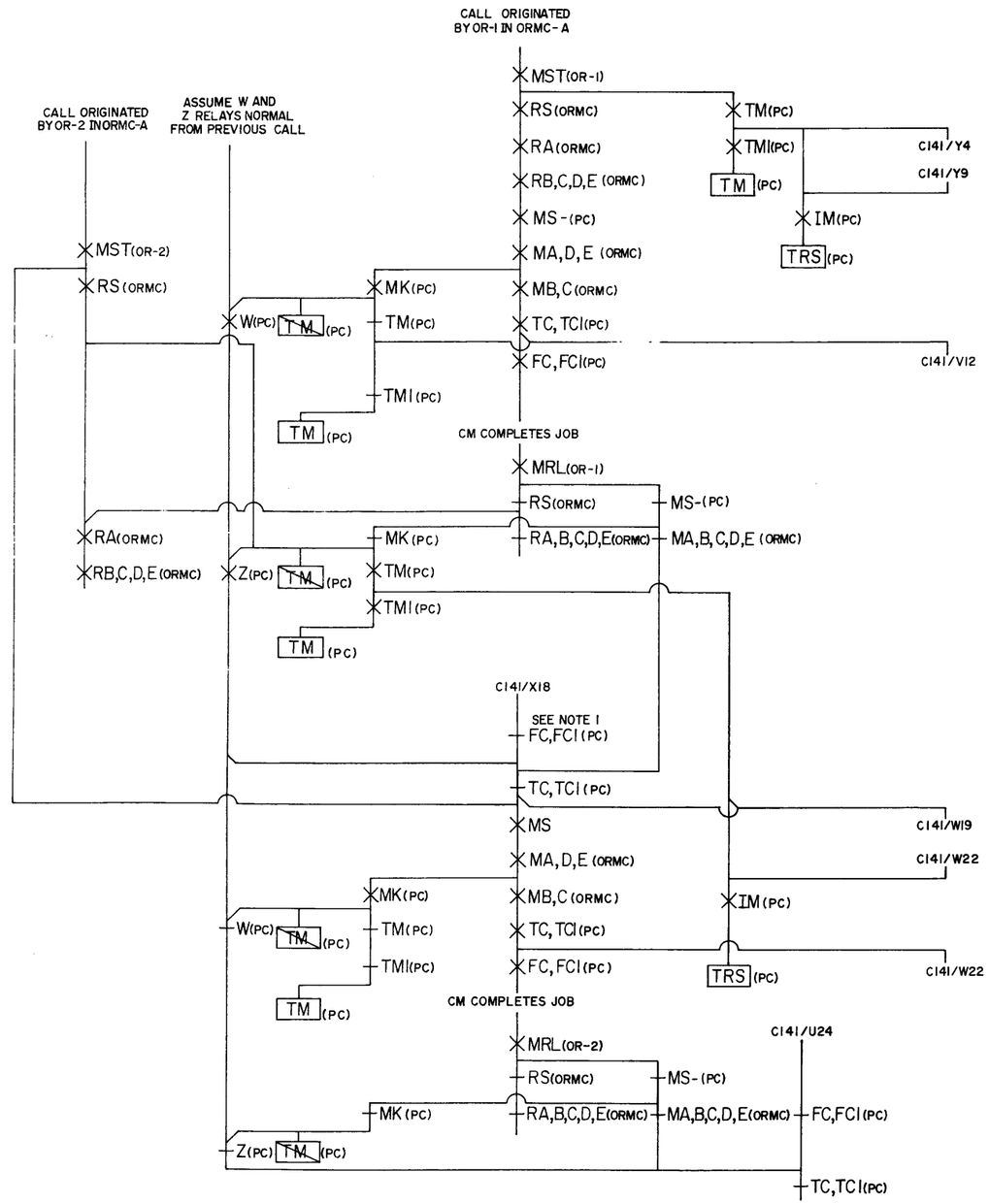

ORIGINATING REGISTER MARKER CONNECTOR-B

(ALL REFERENCES ARE TO ORIGINATING REGISTERS AND PC ASSOCIATED WITH THIS CONNECTOR)

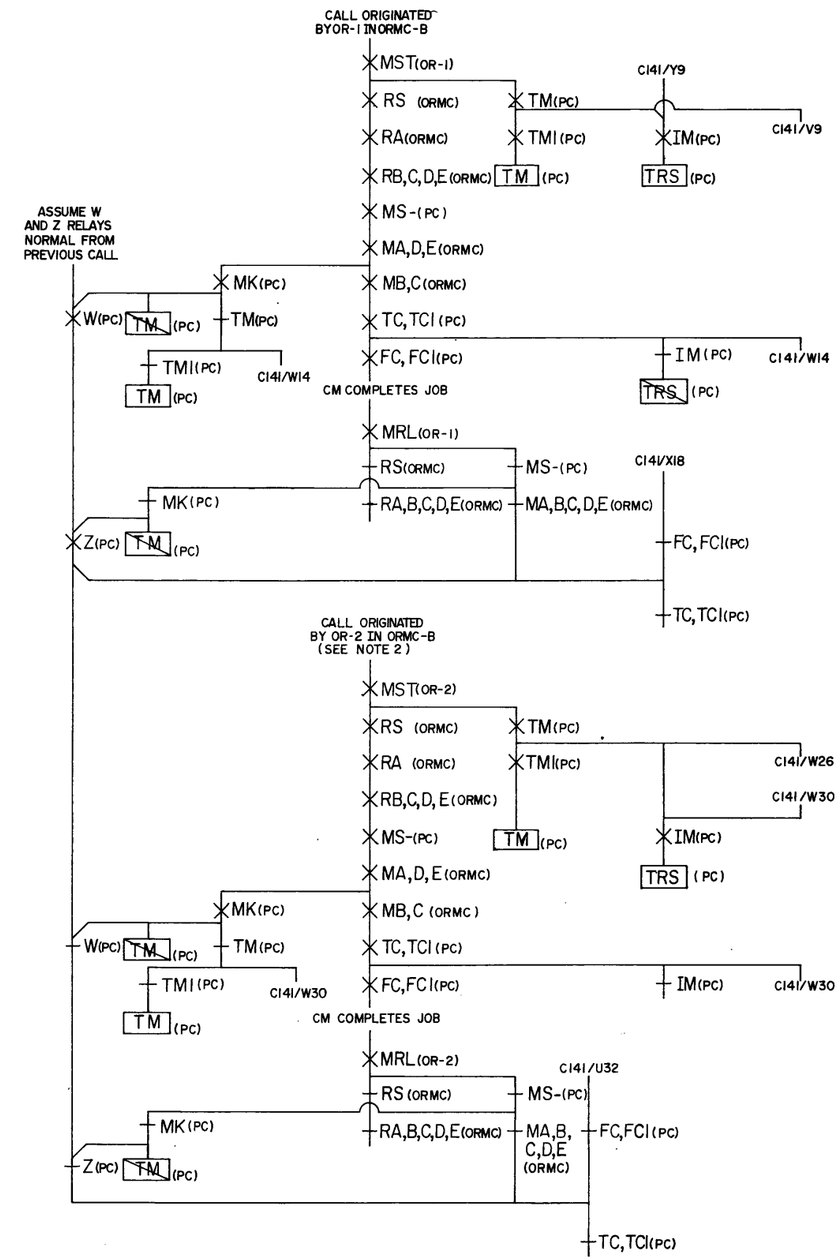

SHEET NOTES:

1. THE CALL FROM (OR-2) IN (ORMC-A) IS GATED UNTIL CALLS IN CONNECTORS B AND C HAVE BEEN HANDLED. RELEASE OF THE FC, FCI RELAYS IN THE (PC) BY THE (MTRC) UNGATES (ORMC-A).
2. (ORMC-B) WAS UNGATED (FC, FCI RELAYS RELEASED BY MTRC) BEFORE A SECOND CALL WAS ORIGINATING.

ISSUE 4

SFD-10-01-C140

SEQUENCE CHART
MASTER TRAFFIC CONTROL

DWG SIZE 6S

BELL TELEPHONE LABORATORIES
INCORPORATED

PRINTED IN U.S.A.

E-7481-L (4-72)

SFD-10-01-C140

ORIGINATING REGISTER MARKER CONNECTOR-C

(ALL REFERENCES ARE TO ORIGINATING REGISTERS AND PC ASSOCIATED WITH THIS CONNECTOR)

MASTER TRAFFIC CONTROL

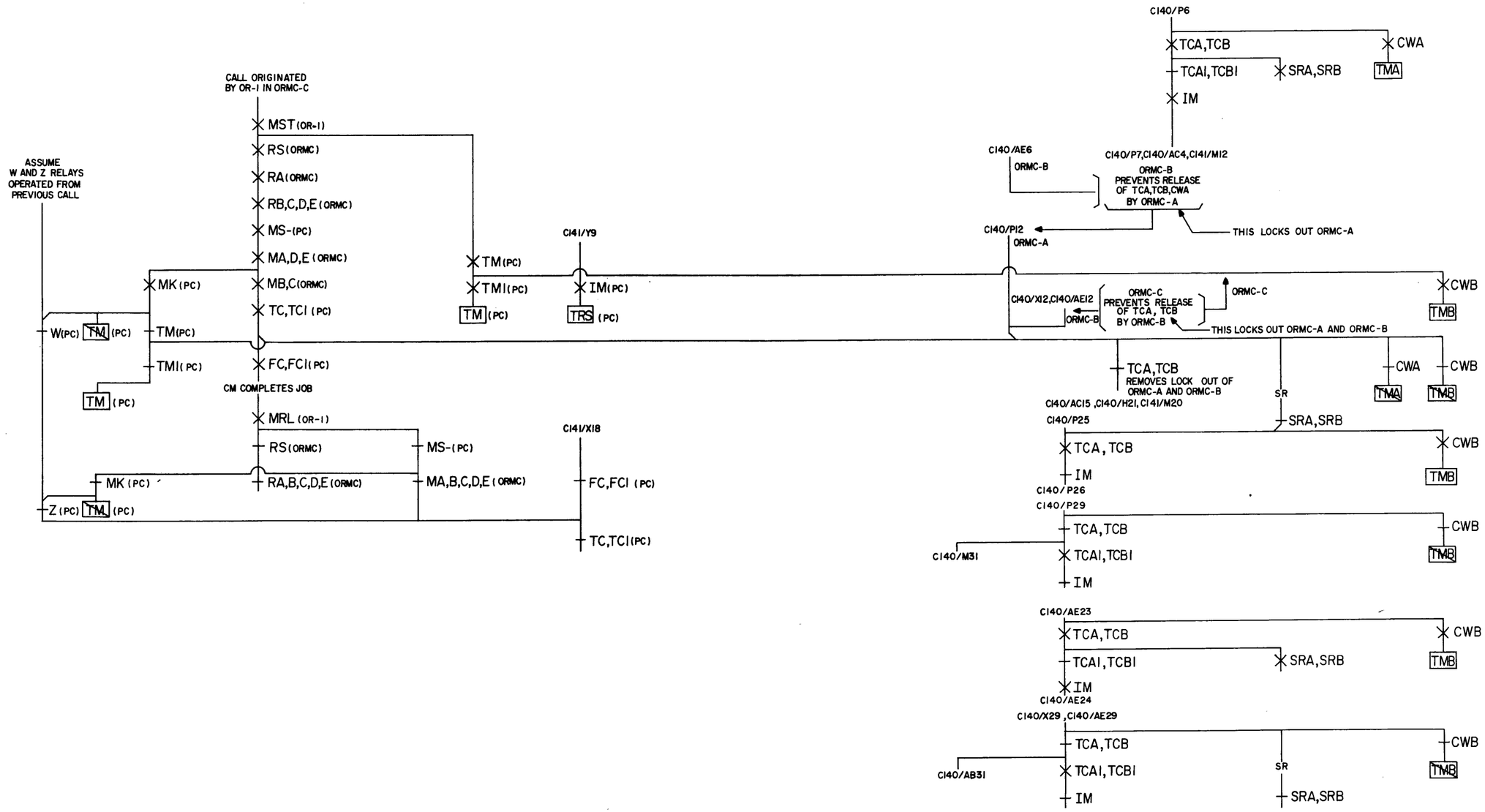

ISSUE 4

SEQUENCE CHART
MASTER TRAFFIC CONTROL

SFD-10-01-C141

BELL TELEPHONE LABORATORIES INCORPORATED

DWG SIZE 6S

PRINTED IN U.S.A.

SFD-10-01-C141

BRUNING 44-131 24092

E-7421-B (10-71)

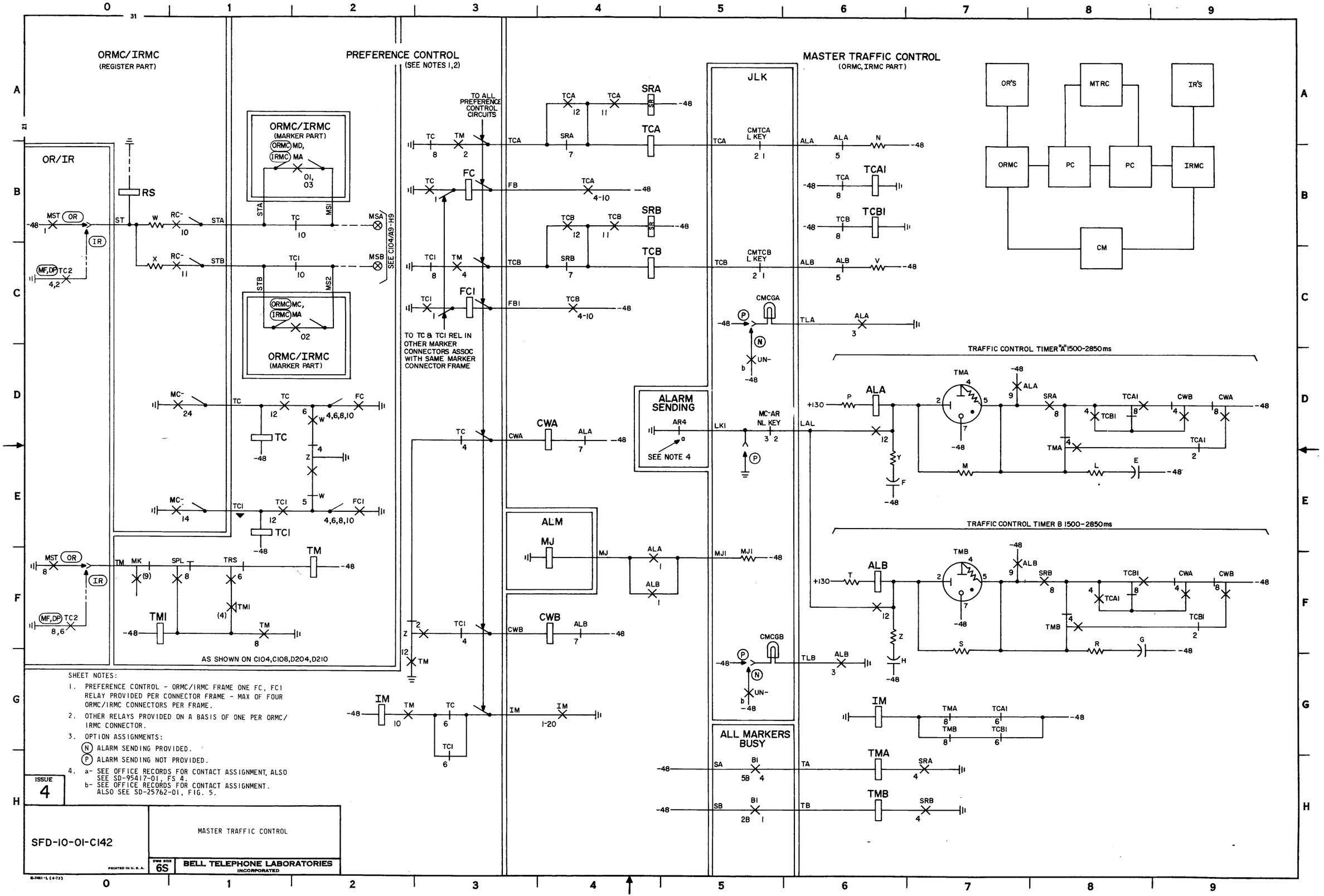

SHEET NOTES:

1. PREFERENCE CONTROL - ORMC/IRMC FRAME ONE FC, FCI RELAY PROVIDED PER CONNECTOR FRAME - MAX OF FOUR ORMC/IRMC CONNECTORS PER FRAME.
2. OTHER RELAYS PROVIDED ON A BASIS OF ONE PER ORMC/IRMC CONNECTOR.
3. OPTION ASSIGNMENTS:
   (N) ALARM SENDING PROVIDED.
   (P) ALARM SENDING NOT PROVIDED.
4. a- SEE OFFICE RECORDS FOR CONTACT ASSIGNMENT. ALSO SEE SD-95417-01, FS 4.
   b- SEE OFFICE RECORDS FOR CONTACT ASSIGNMENT. ALSO SEE SD-25762-01, FIG. 5.

ISSUE 4

SFD-10-01-C142

MASTER TRAFFIC CONTROL

DWG SIZE 6S

BELL TELEPHONE LABORATORIES INCORPORATED

PRINTED IN U.S.A.

SFD-10-01-C142

MTC

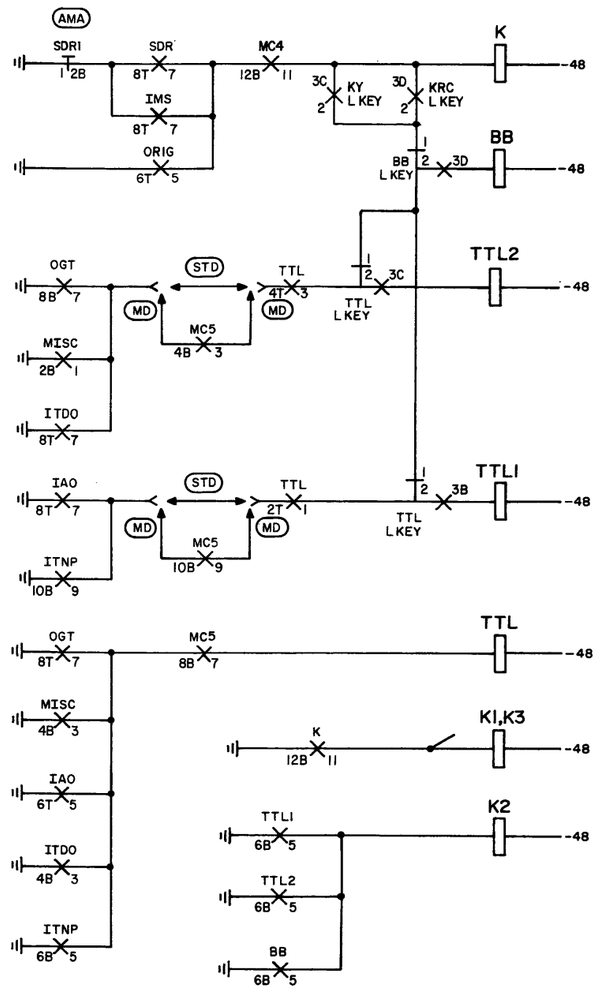

ISSUE 4

SFD-10-01-C144

TEST CALL DIGIT CONTROL

DWG SIZE 6S

BELL TELEPHONE LABORATORIES INCORPORATED

PRINTED IN U. S. A.

E-7451-L (4-73)

SFD-10-01-C144

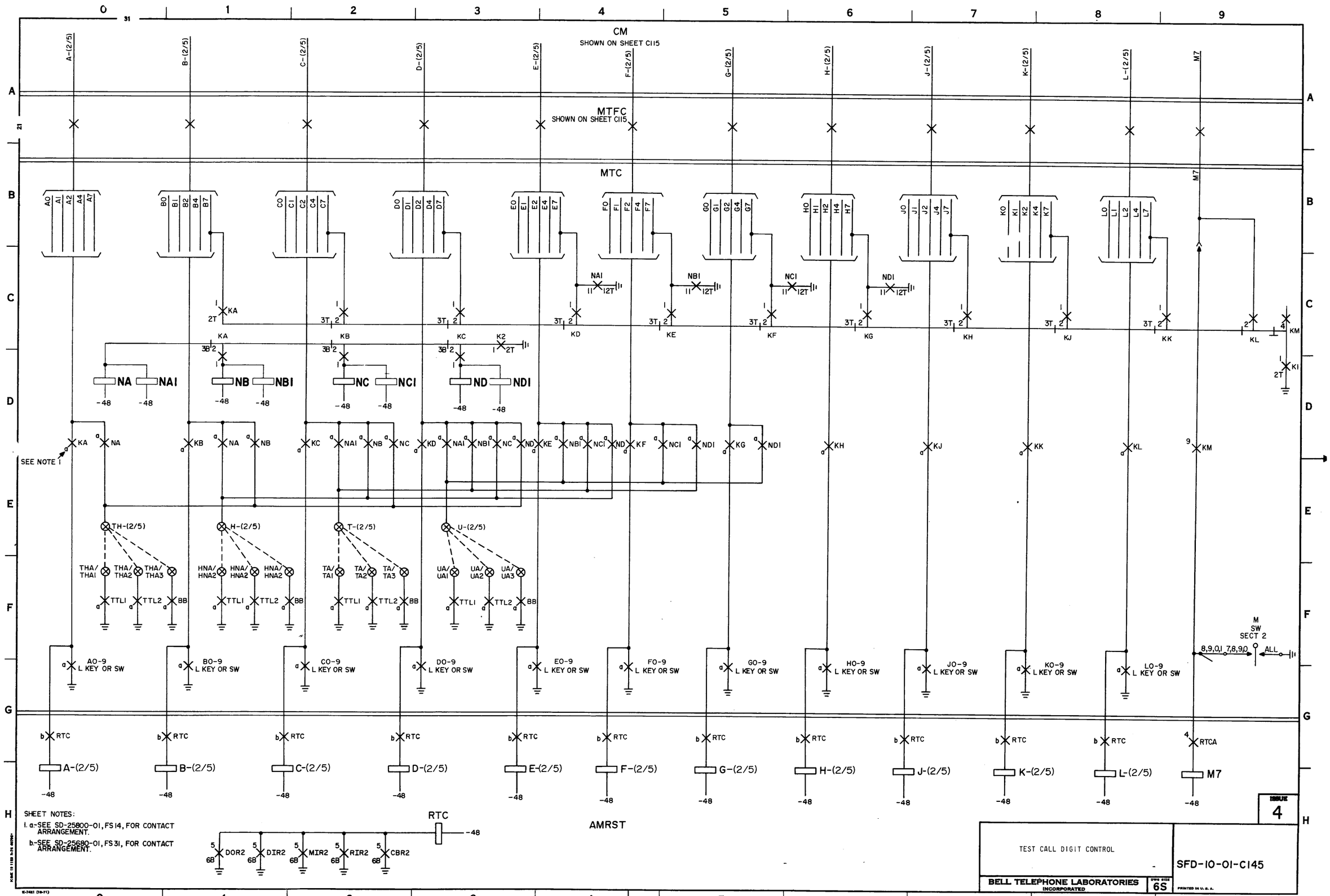

SFD-10-01-C145

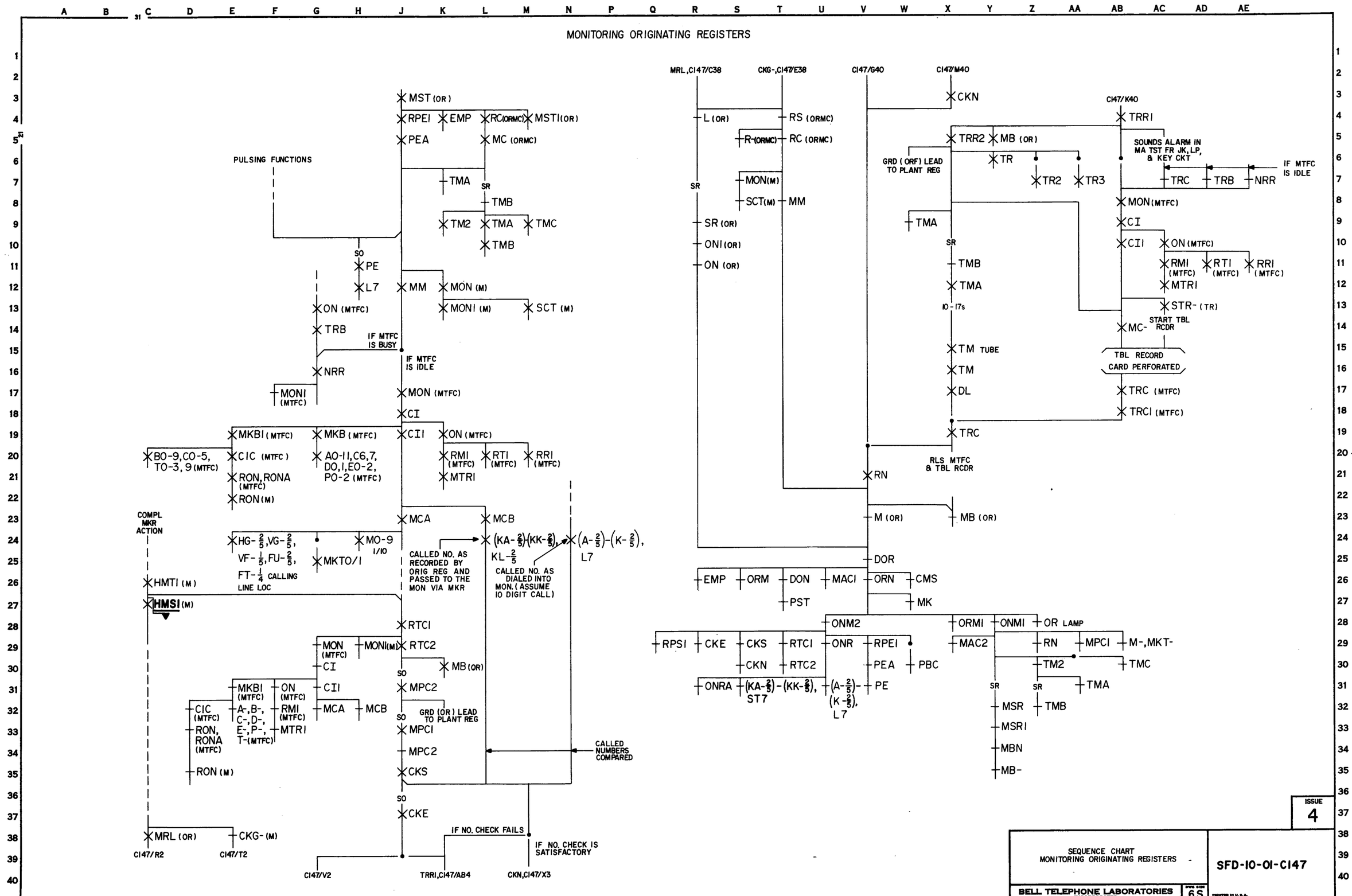
MONITORING ORIGINATING REGISTERS
PULSING FUNCTIONS
MST (OR)
RPEI
EMP
RC (ORMC)
MSTI (OR)
PEA
MC (ORMC)
TMA
SR
TMB
TM2
TMA
TMC
TMB
SO
PE
L7
MM
MON (M)
MONI (M)
SCT (M)
ON (MTFC)
TRB
IF MTFC IS BUSY
IF MTFC IS IDLE
NRR
MONI (MTFC)
MON (MTFC)
CI
MKBI (MTFC)
MKB (MTFC)
CII
ON (MTFC)
BO-9, CO-5, TO-3, 9 (MTFC)
CIC (MTFC)
AO-11, C6, 7, DO, 1, EO-2, PO-2 (MTFC)
RMI (MTFC)
RTI (MTFC)
RRI (MTFC)
RON, RONA (MTFC)
MTRI
RON (M)
COMPL MKR ACTION
MCA
MCB
HG-2/5, VG-2/5, VF-1/5, FU-2/5, FT-1/4 CALLING LINE LOC
MO-9 1/10
MKTO/I
(KA-2/5)-(KK-2/5), KL-2/5
(A-2/5)-(K-2/5), L7
CALLED NO. AS RECORDED BY ORIG REG AND PASSED TO THE MON VIA MKR
CALLED NO. AS DIALED INTO MON. (ASSUME 10 DIGIT CALL)
HMTI (M)
HMSI (M)
RTCI
MON (MTFC)
MONI (M)
RTC2
MB (OR)
MPC2
GRD (OR) LEAD TO PLANT REG
MPCI
MPC2
CKS
CALLED NUMBERS COMPARED
CKE
MRL (OR)
CKG- (M)
IF NO. CHECK FAILS
IF NO. CHECK IS SATISFACTORY
C147/R2
C147/T2
C147/V2
TRRI, C147/AB4
CKN, C147/X3
MRL, C147/C38
CKG-, C147/E38
C147/G40
C147/M40
L (OR)
RS (ORMC)
R (ORMC)
RC (ORMC)
MON (M)
SCT (M)
MM
SR (OR)
ONI (OR)
ON (OR)
CKN
C147/K40
TRRI
TRR2
MB (OR)
GRD (ORF) LEAD TO PLANT REG
TR
TR2
TR3
SOUNDS ALARM IN MA TST FR JK, LP, & KEY CKT
IF MTFC IS IDLE
TRC
TRB
NRR
MON (MTFC)
CI
CII
ON (MTFC)
RMI (MTFC)
RTI (MTFC)
RRI (MTFC)
MTRI
STR- (TR)
MC-
START TBL RCDR
TBL RECORD CARD PERFORATED
TRC (MTFC)
TRCI (MTFC)
TMA
TMB
TMA
10-17s
TM TUBE
TM
DL
TRC
RLS MTFC & TBL RCDR
RN
M (OR)
MB (OR)
DOR
EMP
ORM
DON
MACI
ORN
CMS
PST
MK
ONM2
ORMI
ONMI
OR LAMP
RPSI
CKE
CKS
RTCI
ONR
RPEI
MAC2
RN
MPCI
M-, MKT-
CKN
RTC2
PEA
PBC
TM2
TMC
ONRA
(KA-2/5)-(KK-2/5), ST7
(A-2/5)-(K-2/5), L7
PE
TMA
MSR
TMB
MSRI
MBN
MB-
ISSUE 4
SEQUENCE CHART MONITORING ORIGINATING REGISTERS
SFD-10-01-C147
BELL TELEPHONE LABORATORIES INCORPORATED
6S
SFD-10-01-C147
BRUNING 44-131 24092

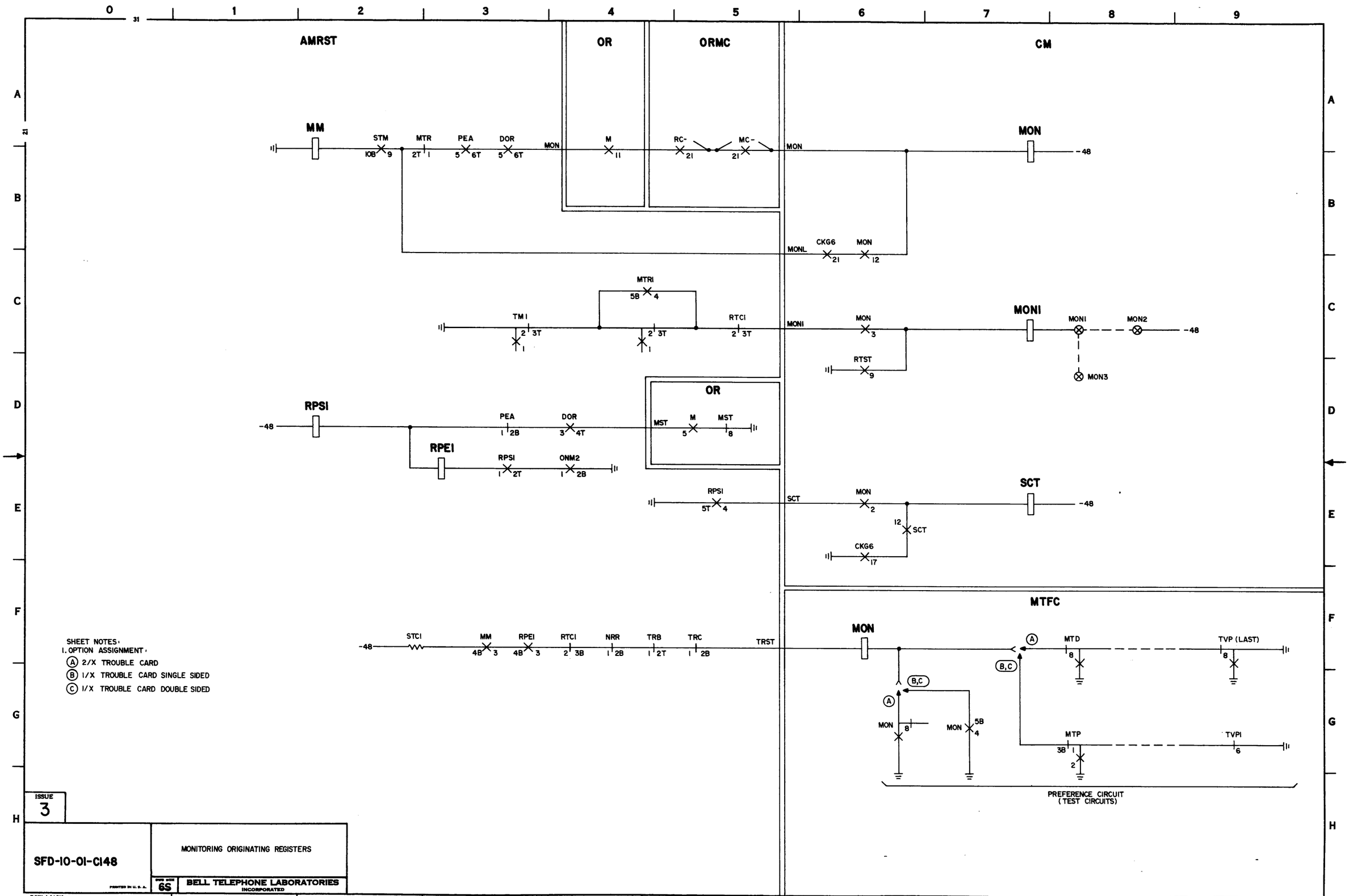

SHEET NOTES:
1. OPTION ASSIGNMENT:
(A) 2/X TROUBLE CARD
(B) 1/X TROUBLE CARD SINGLE SIDED
(C) 1/X TROUBLE CARD DOUBLE SIDED

ISSUE 3

SFD-10-01-C148

MONITORING ORIGINATING REGISTERS

PRINTED IN U.S.A.

SIZE 6S

BELL TELEPHONE LABORATORIES INCORPORATED

SFD-10-01-C148

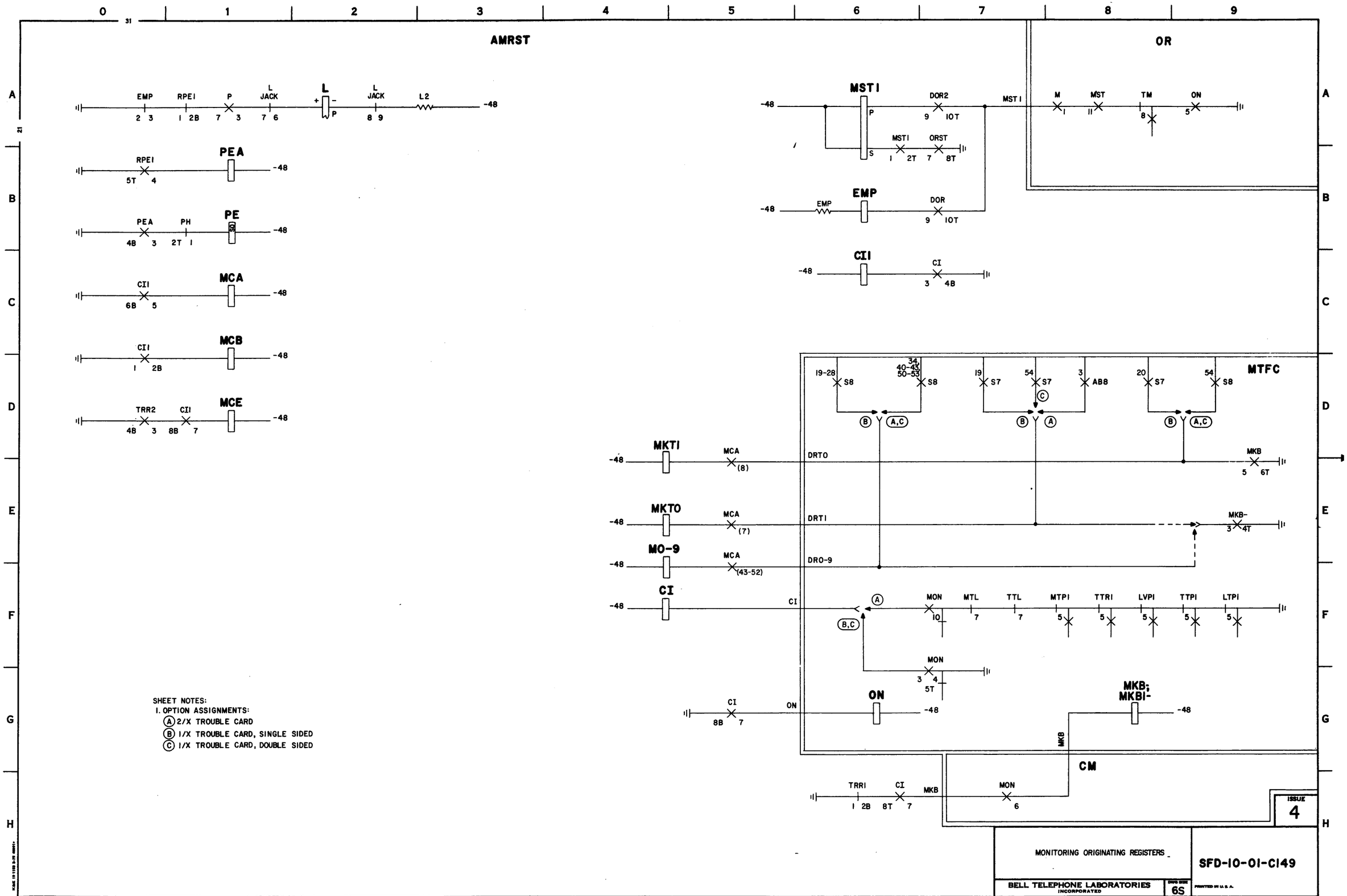

SFD-10-01-C149

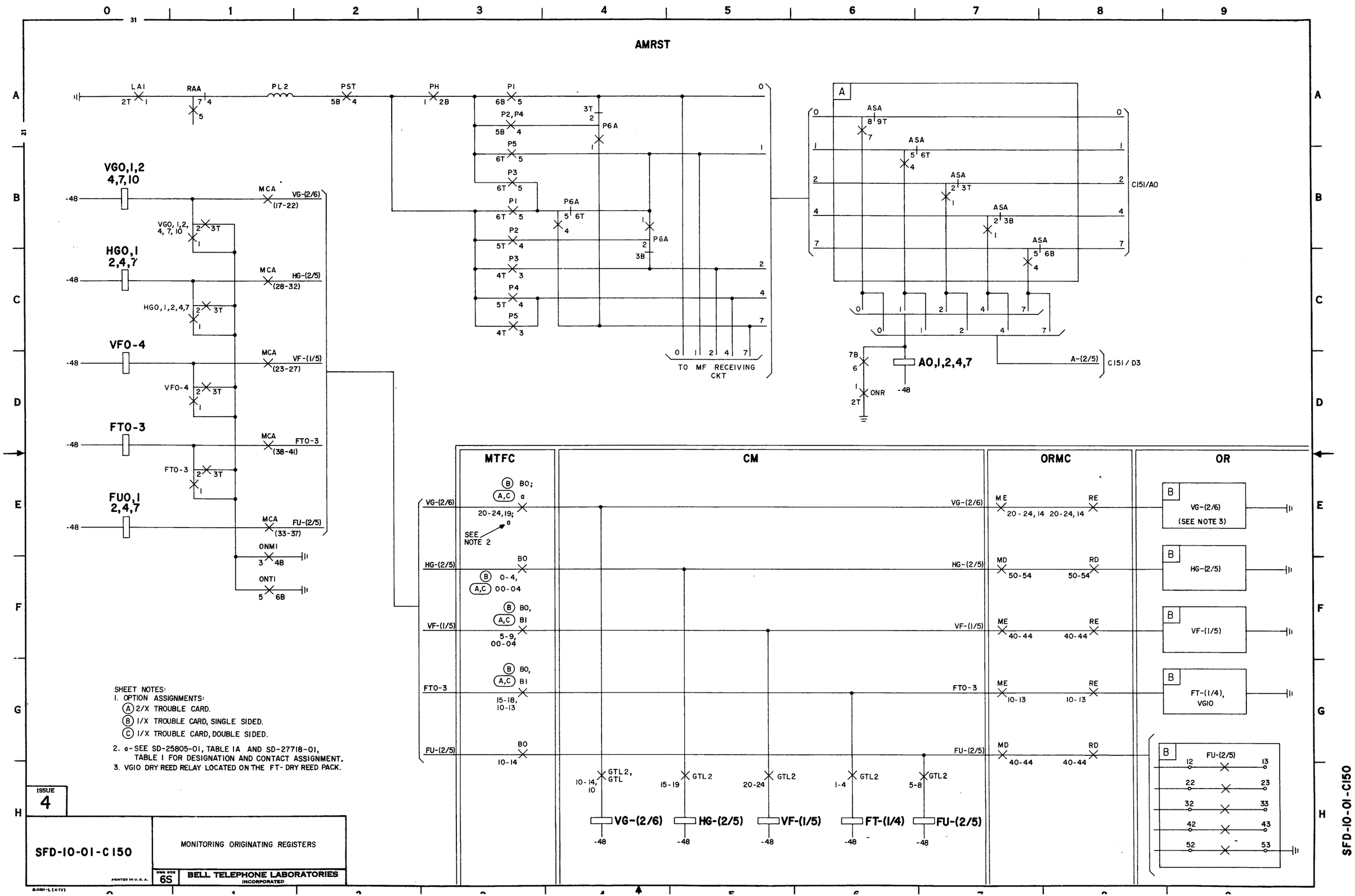
AMRST
LA1
RAA
PL2
PST
PH
P1
P2,P4
P5
P3
P6A
TO MF RECEIVING CKT
VGO,1,2 4,7,10
HGO,1 2,4,7
VFO-4
FTO-3
FUO,1 2,4,7
MCA
VG-(2/6) (17-22)
HG-(2/5) (28-32)
VF-(1/5) (23-27)
FTO-3 (38-41)
FU-(2/5) (33-37)
ONM1
ONT1
ONR
ASA
AO,1,2,4,7
A-(2/5)
C151/AO
C151/D3
MTFC
CM
ORMC
OR
VG-(2/6)
HG-(2/5)
VF-(1/5)
FTO-3
FU-(2/5)
SEE NOTE 2
GTL2, GTL
GTL2
ME
RE
MD
RD
(SEE NOTE 3)
FT-(1/4), VGIO
SHEET NOTES:
1. OPTION ASSIGNMENTS:
(A) 2/X TROUBLE CARD.
(B) 1/X TROUBLE CARD, SINGLE SIDED.
(C) 1/X TROUBLE CARD, DOUBLE SIDED.
2. a-SEE SD-25805-01, TABLE 1A AND SD-27718-01, TABLE 1 FOR DESIGNATION AND CONTACT ASSIGNMENT.
3. VGIO DRY REED RELAY LOCATED ON THE FT-DRY REED PACK.
ISSUE 4
SFD-10-01-C150
MONITORING ORIGINATING REGISTERS
DWG SIZE 6S
BELL TELEPHONE LABORATORIES INCORPORATED
PRINTED IN U.S.A.
SFD-10-01-C150

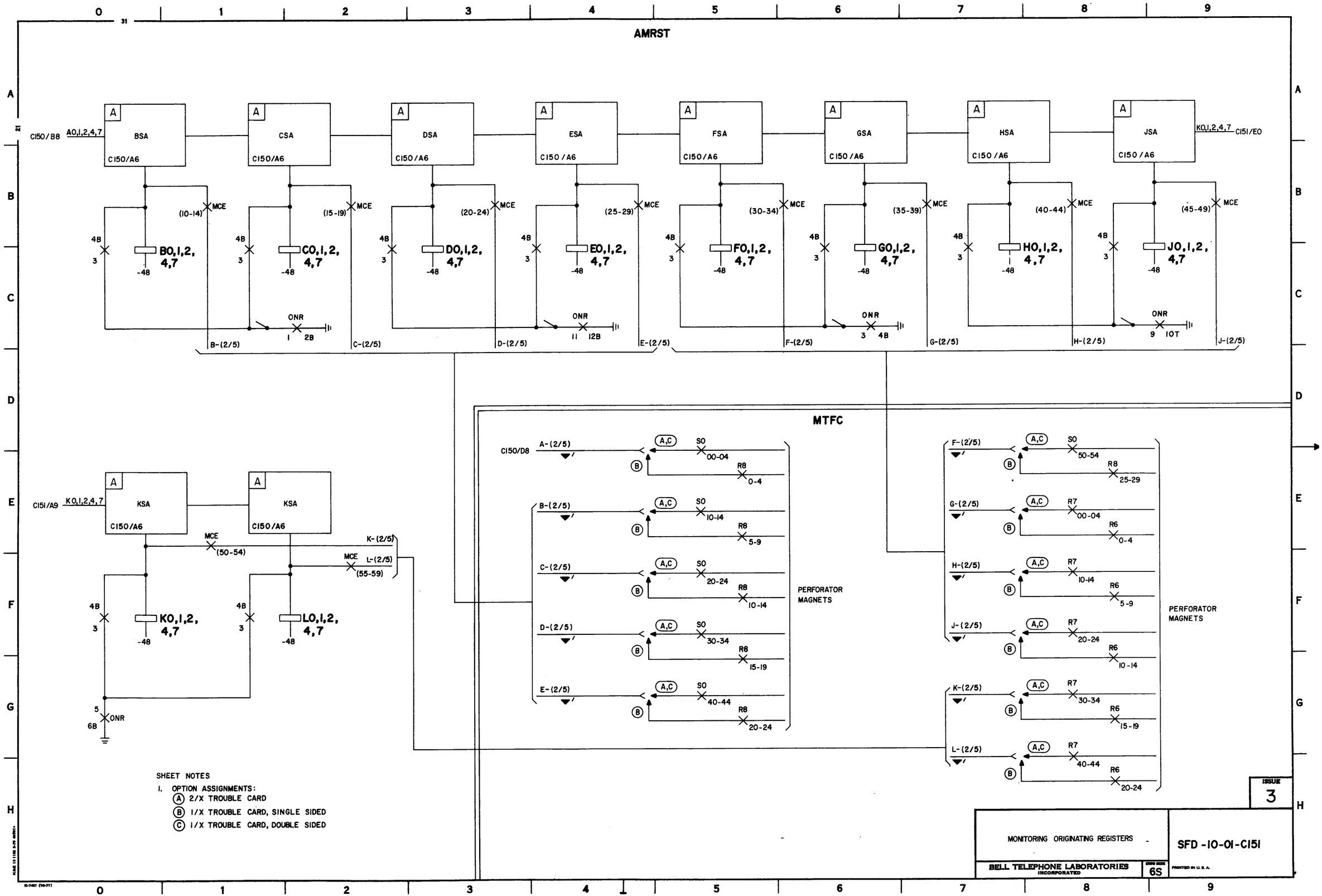
AMRST
C150/B8
A0,1,2,4,7
BSA
CSA
DSA
ESA
FSA
GSA
HSA
JSA
C150/A6
K0,1,2,4,7
C151/E0
MCE
(10-14)
(15-19)
(20-24)
(25-29)
(30-34)
(35-39)
(40-44)
(45-49)
B0,1,2,4,7
C0,1,2,4,7
D0,1,2,4,7
E0,1,2,4,7
F0,1,2,4,7
G0,1,2,4,7
H0,1,2,4,7
J0,1,2,4,7
4B
3
-48
ONR
1 2B
11 12B
3 4B
9 10T
B-(2/5)
C-(2/5)
D-(2/5)
E-(2/5)
F-(2/5)
G-(2/5)
H-(2/5)
J-(2/5)
C151/A9
KSA
(50-54)
(55-59)
K-(2/5)
L-(2/5)
K0,1,2,4,7
L0,1,2,4,7
5
6B
MTFC
C150/D8
A,C
B
SO
R8
R7
R6
00-04
0-4
10-14
5-9
20-24
10-14
30-34
15-19
40-44
20-24
50-54
25-29
PERFORATOR MAGNETS
SHEET NOTES
1. OPTION ASSIGNMENTS:
(A) 2/X TROUBLE CARD
(B) 1/X TROUBLE CARD, SINGLE SIDED
(C) 1/X TROUBLE CARD, DOUBLE SIDED
ISSUE 3
MONITORING ORIGINATING REGISTERS
SFD-10-01-C151
BELL TELEPHONE LABORATORIES INCORPORATED
6S
PRINTED IN U.S.A.
SFD-10-01-C151

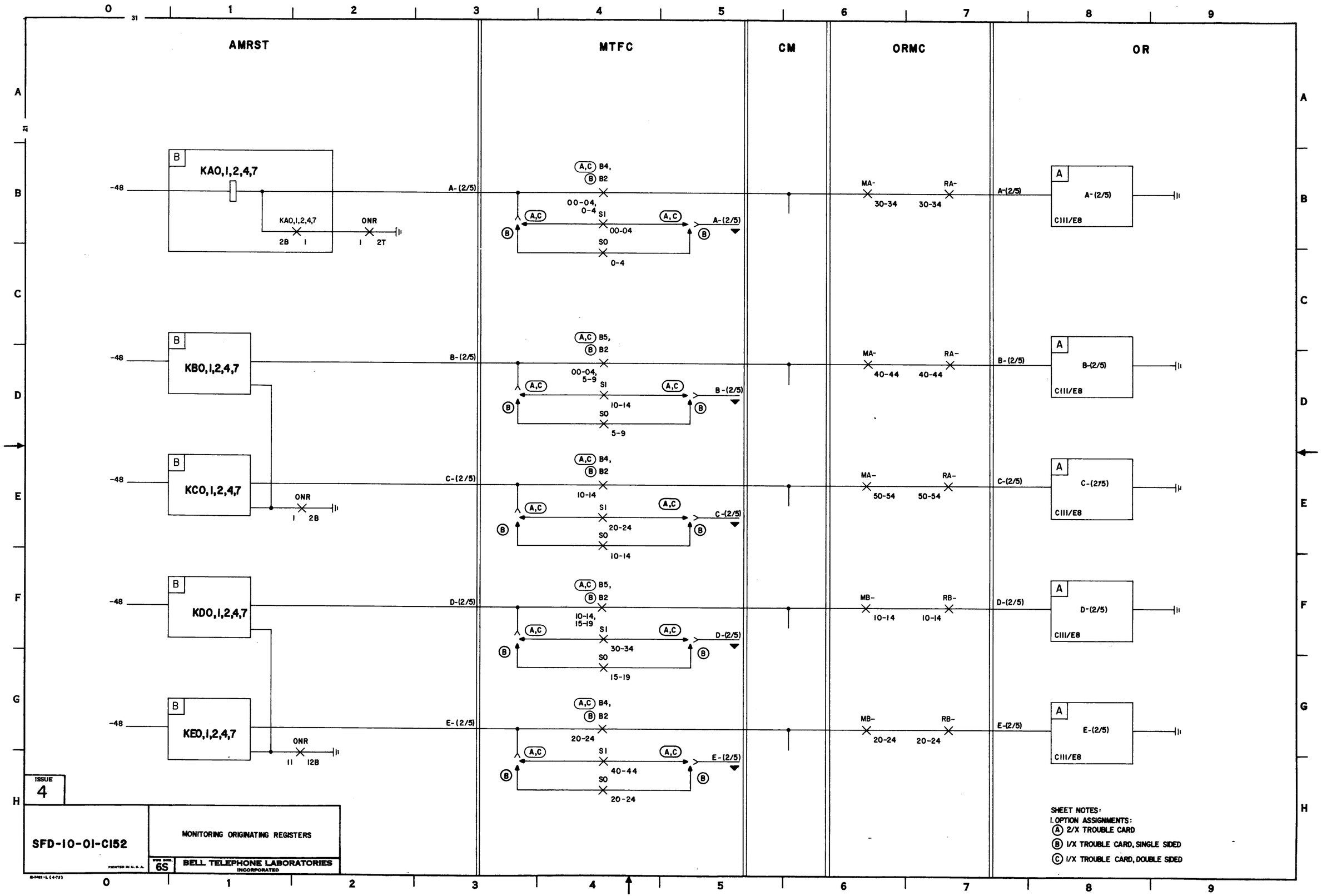
AMRST
MTFC
CM
ORMC
OR
KA0,1,2,4,7
KB0,1,2,4,7
KC0,1,2,4,7
KD0,1,2,4,7
KE0,1,2,4,7
-48
A-(2/5)
B-(2/5)
C-(2/5)
D-(2/5)
E-(2/5)
ONR
KA0,1,2,4,7
2B 1
1 2T
1 2B
11 12B
A,C B4, B B2
A,C B5, B B2
00-04, 0-4
00-04, 5-9
10-14
20-24
30-34
40-44
50-54
SI
SO
MA-
RA-
MB-
RB-
CIII/E8
SHEET NOTES:
1. OPTION ASSIGNMENTS:
(A) 2/X TROUBLE CARD
(B) 1/X TROUBLE CARD, SINGLE SIDED
(C) 1/X TROUBLE CARD, DOUBLE SIDED
ISSUE 4
SFD-10-01-C152
MONITORING ORIGINATING REGISTERS
6S
BELL TELEPHONE LABORATORIES INCORPORATED
PRINTED IN U.S.A.
SFD-10-01-C152

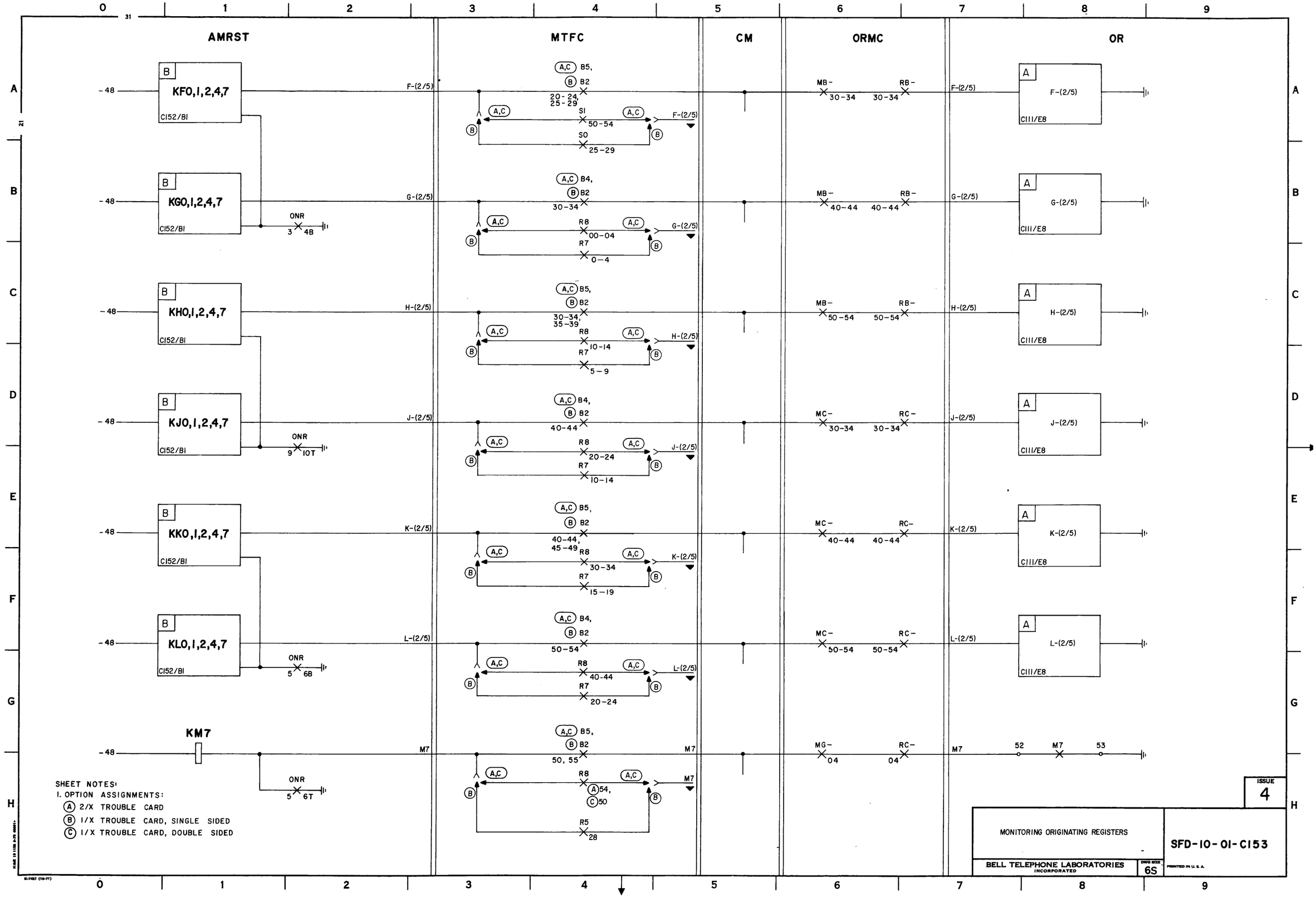

SFD-10-01-C153

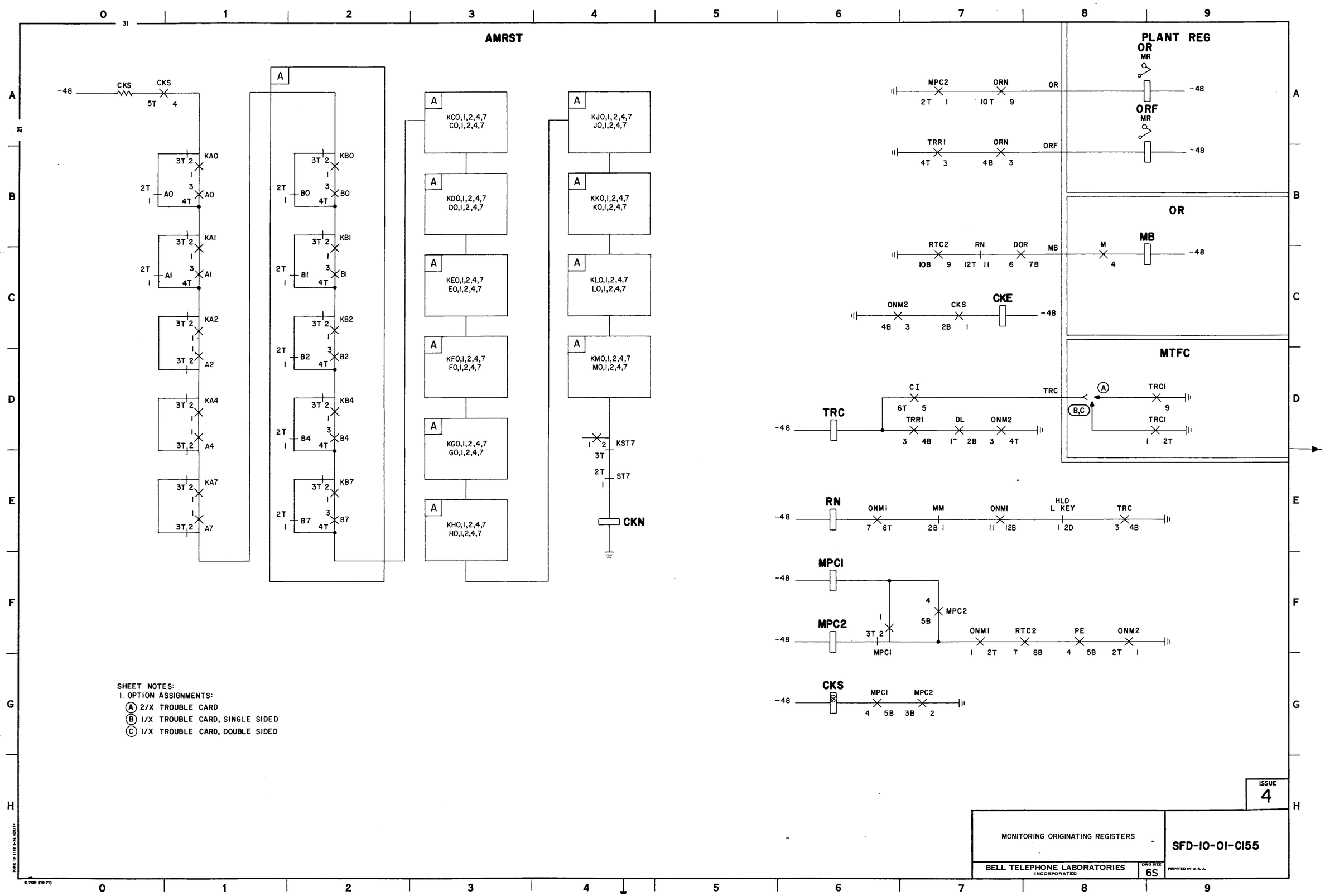

SFD-10-01-C155

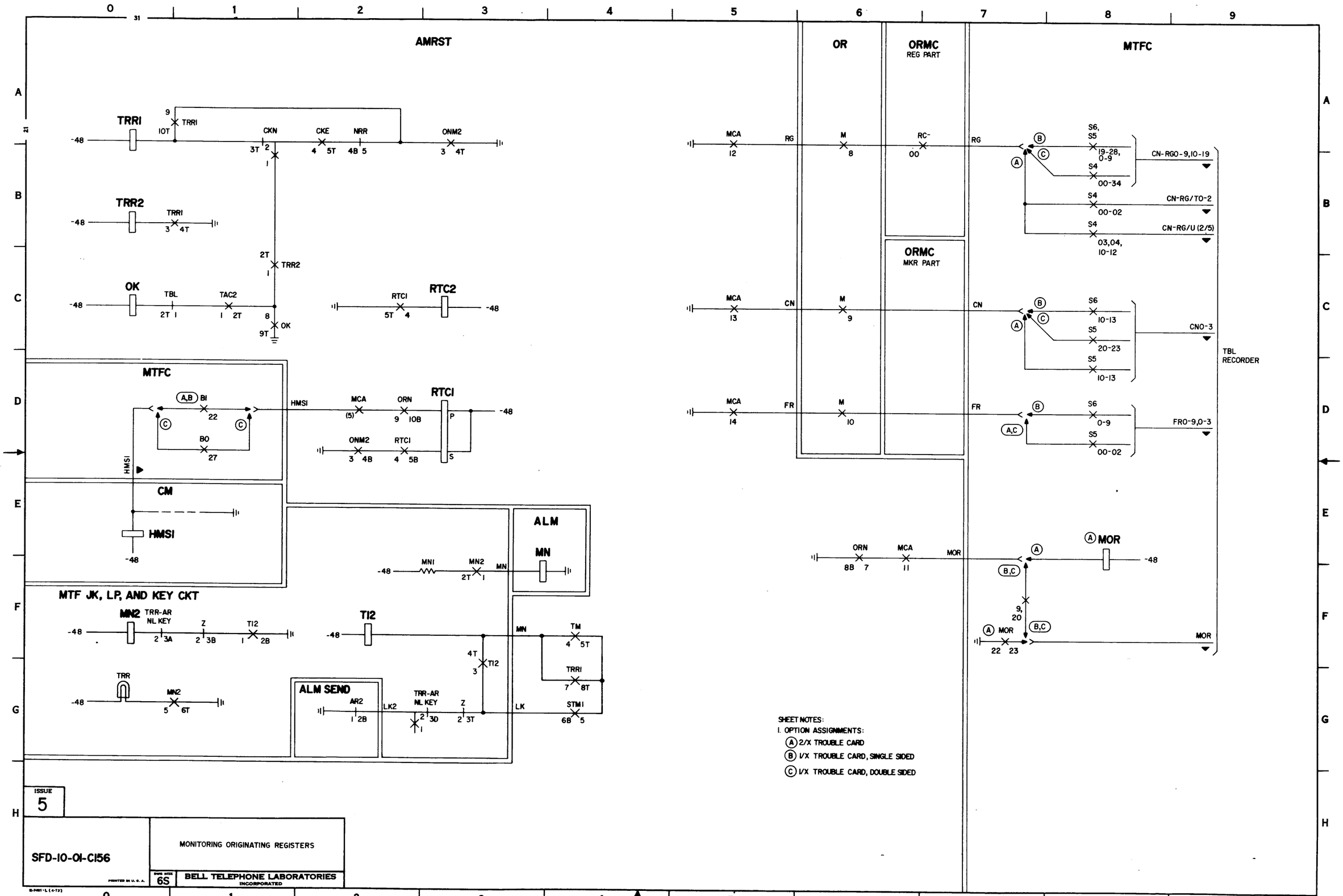

ISSUE 5

SFD-10-01-C156

MONITORING ORIGINATING REGISTERS

BELL TELEPHONE LABORATORIES INCORPORATED

SIZE 6S

SFD-10-01-C156

ESTABLISHING OUTGOING TRUNK CONNECTION

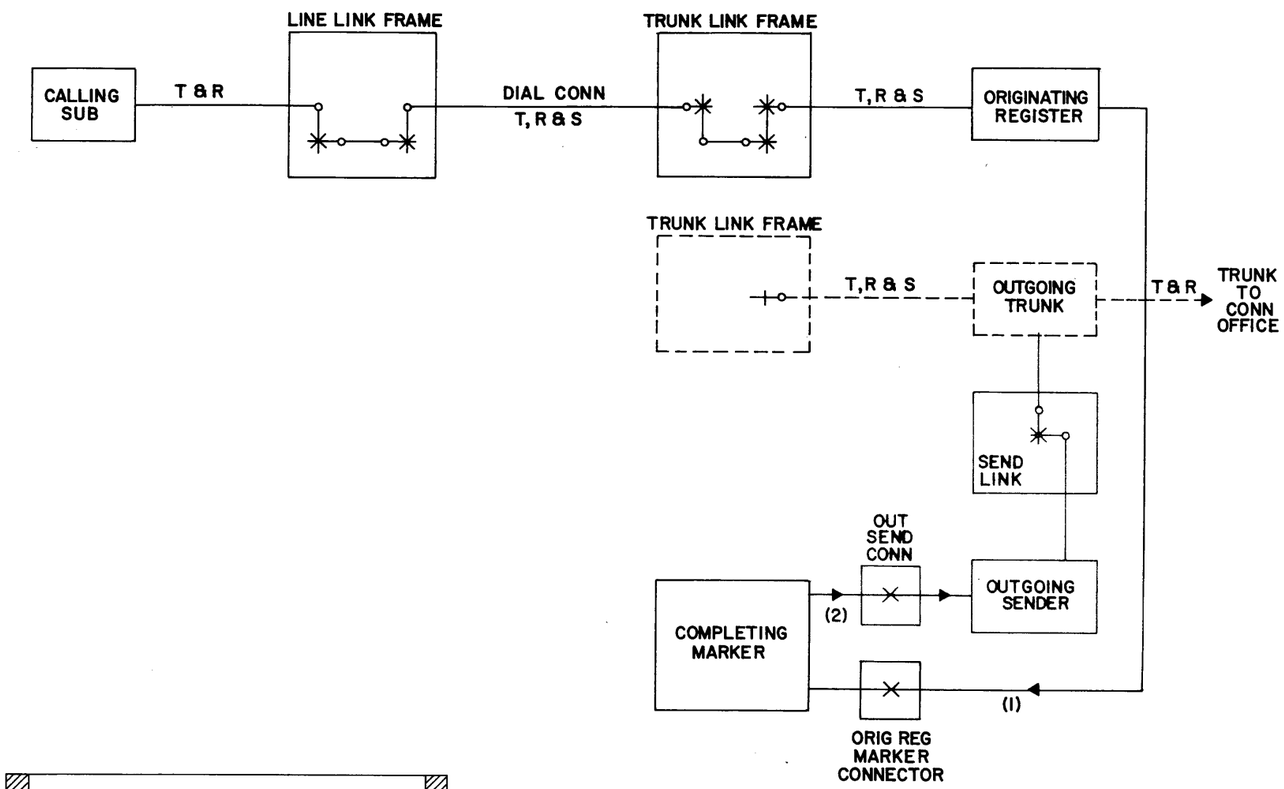

INDEX

CAUTION!

DUE TO THE SIMPLIFIED NATURE OF THIS DOCUMENT, INFORMATION SHOWN MAY NOT BE COMPLETE.

ISSUE 3

PART C2
SELECTION OF A SENDER

SFD-10-01-C201

BELL TELEPHONE LABORATORIES INCORPORATED

DWG SIZE 6S

PRINTED IN U.S.A.

SFD-10-01-C201
2 SHEETS, SH 1

C302 TL AND TRK SEL

C116/K22 TRNSL, RTE & SCRN

C102 SEIZURE OF CM

C302/W34 TL & TRK SEL

C402/AC13 LL SEIZURE

C503/E36 CHAN SEL AND HOLD MAG OPR

SENDER SELECTION AND TIMING

AFTER RECYCLE

C513/P39 JCTR RETST & RECYCLE

C302/D17

C302/F19

NON AMA

ROUTE SERIES RELAY IF REQD

AS REQUIRED

C202/D31

CHAN SEL C503/F3

C102/C25

C102/AA25

C202/Q9

EXCEPT PREFERRED

(TANDEM)

(NON TANDEM)

8-10ms

15-21ms

STD 8-10ms, 28-35ms MD

STD 15-20ms, 16-23ms ABM

C302/F26 TL & TRK SEL (SEE NOTE 1)

SHEET NOTES:

1. TIMING FOR TL SEIZURE AND LL SEIZURE IS NOT STARTED UNTIL THE OSC IS RELEASED, MOST OF THE TIME, THE TL AND LL WILL HAVE BEEN SEIZED BEFORE THE OSC IS RELEASED.

IF THE CM REQUESTS A TROUBLE RECORD. THE TRST RELAY REOPERATES KG AND TGS1,2 RELAYS TO GIVE A RECORD OF ALL LEADS TO SENDER EXCEPT RN-& OBS/NOB

ISSUE 5

SFD-10-01-C202

SEQUENCE CHART
SENDER SELECTION AND TIMING

DWG SIZE 6S

BELL TELEPHONE LABORATORIES INCORPORATED

SFD-10-01-C202

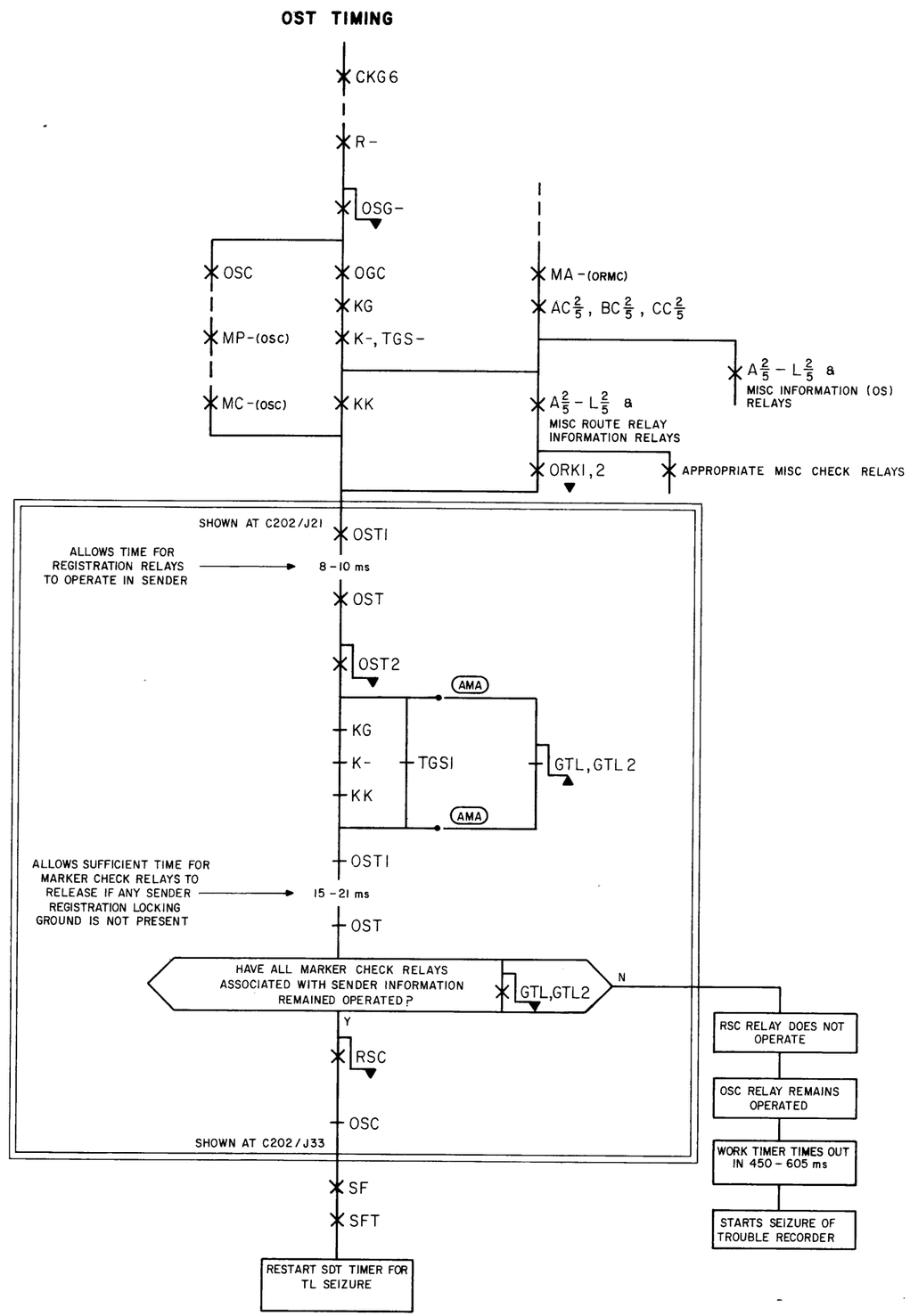

ISSUE 4

SEQUENCE CHART
OUTSENDER TIMING (OST)

SFD-10-01-C203

BELL TELEPHONE LABORATORIES INCORPORATED

DWG SIZE 6S

PRINTED IN U.S.A.

SFD-10-01-C203

BRUNING 44-131 24092

E-7421-B (10-71)

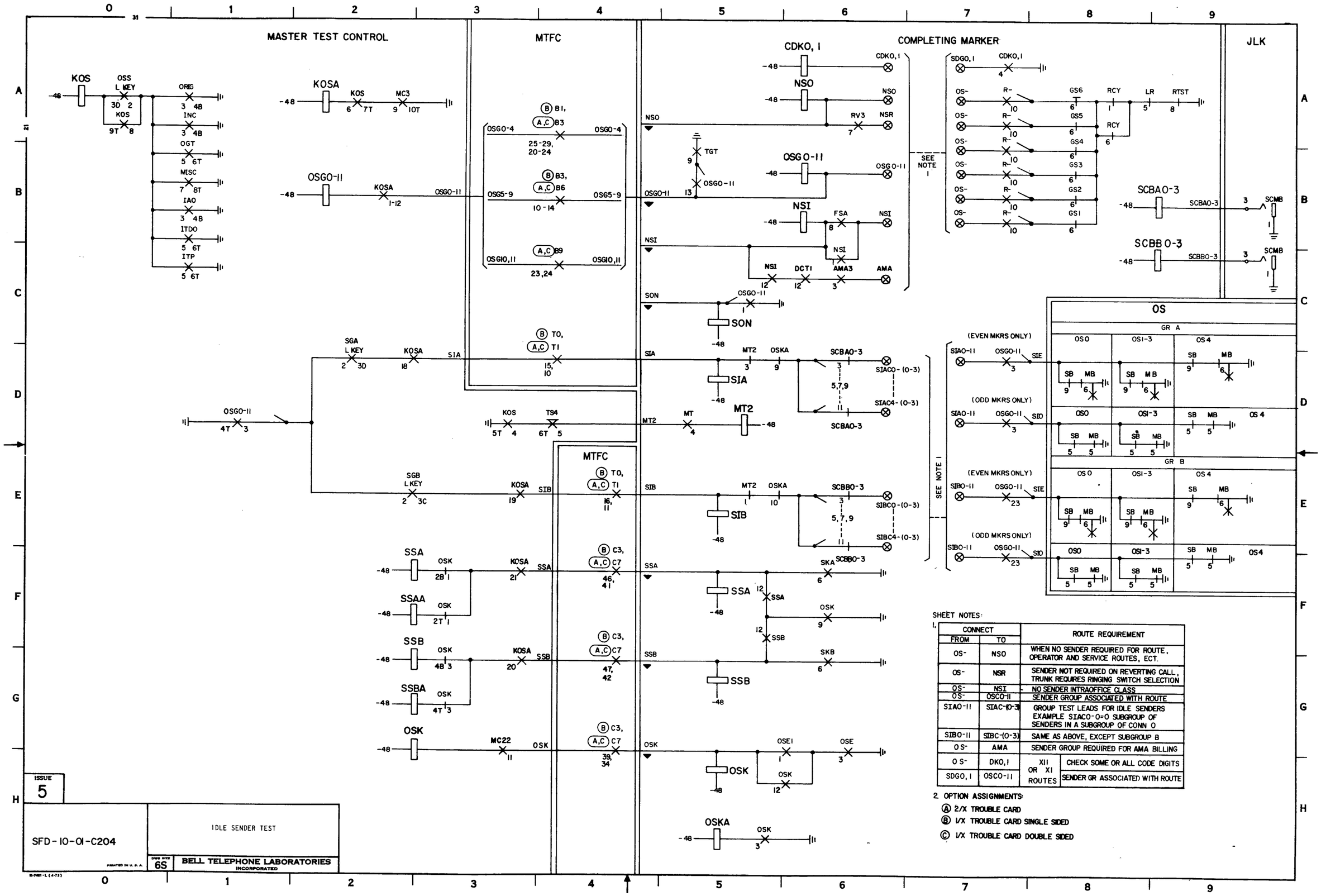

SHEET NOTES:

1.

CONNECT FROM	CONNECT TO	ROUTE REQUIREMENT	
OS-	NSO	WHEN NO SENDER REQUIRED FOR ROUTE, OPERATOR AND SERVICE ROUTES, ECT.	
OS-	NSR	SENDER NOT REQUIRED ON REVERTING CALL, TRUNK REQUIRES RINGING SWITCH SELECTION	
OS-	NSI	NO SENDER INTRAOFFICE CLASS	
OS-	OSCO-11	SENDER GROUP ASSOCIATED WITH ROUTE	
SIAO-11	SIAC-(0-3)	GROUP TEST LEADS FOR IDLE SENDERS EXAMPLE SIACO-0=0 SUBGROUP OF SENDERS IN A SUBGROUP OF CONN 0	
SIBO-11	SIBC-(0-3)	SAME AS ABOVE, EXCEPT SUBGROUP B	
OS-	AMA	SENDER GROUP REQUIRED FOR AMA BILLING	
OS-	DKO, I	XII OR XI ROUTES	CHECK SOME OR ALL CODE DIGITS
SDGO, I	OSCO-11		SENDER GR ASSOCIATED WITH ROUTE

2. OPTION ASSIGNMENTS:

Ⓐ 2/X TROUBLE CARD

Ⓑ 1/X TROUBLE CARD SINGLE SIDED

Ⓒ 1/X TROUBLE CARD DOUBLE SIDED

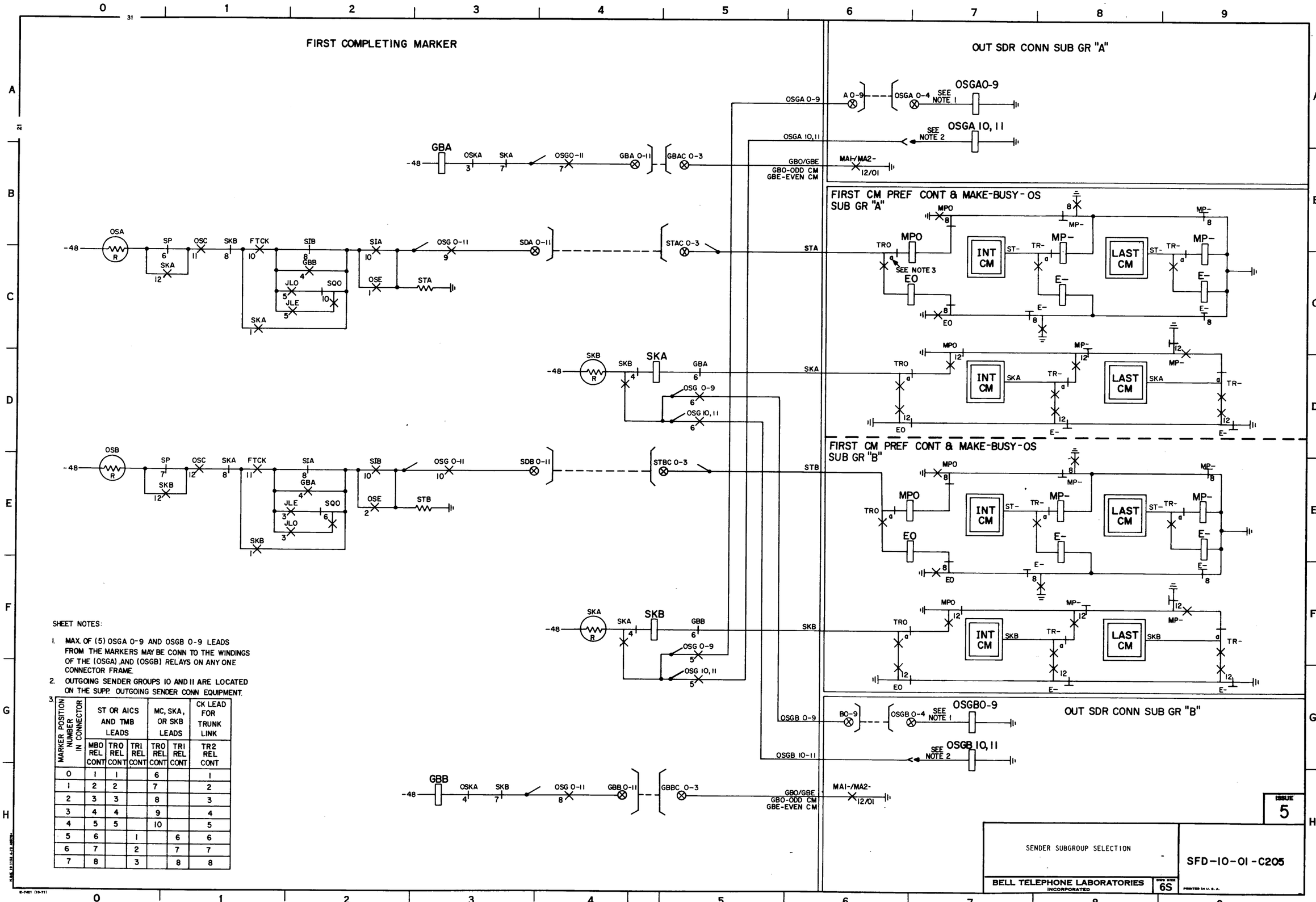

SHEET NOTES:

1. MAX. OF (5) OSGA 0-9 AND OSGB 0-9 LEADS FROM THE MARKERS MAY BE CONN TO THE WINDINGS OF THE (OSGA) AND (OSGB) RELAYS ON ANY ONE CONNECTOR FRAME.
2. OUTGOING SENDER GROUPS 10 AND 11 ARE LOCATED ON THE SUPP. OUTGOING SENDER CONN EQUIPMENT.
3.

MARKER POSITION NUMBER IN CONNECTOR	ST OR AICS AND TMB LEADS			MC, SKA, OR SKB LEADS		CK LEAD FOR TRUNK LINK
	MBO REL CONT	TRO REL CONT	TRI REL CONT	TRO REL CONT	TRI REL CONT	TR2 REL CONT
0	1	1		6		1
1	2	2		7		2
2	3	3		8		3
3	4	4		9		4
4	5	5		10		5
5	6		1		6	6
6	7		2		7	7
7	8		3		8	8

SFD-10-01-C205

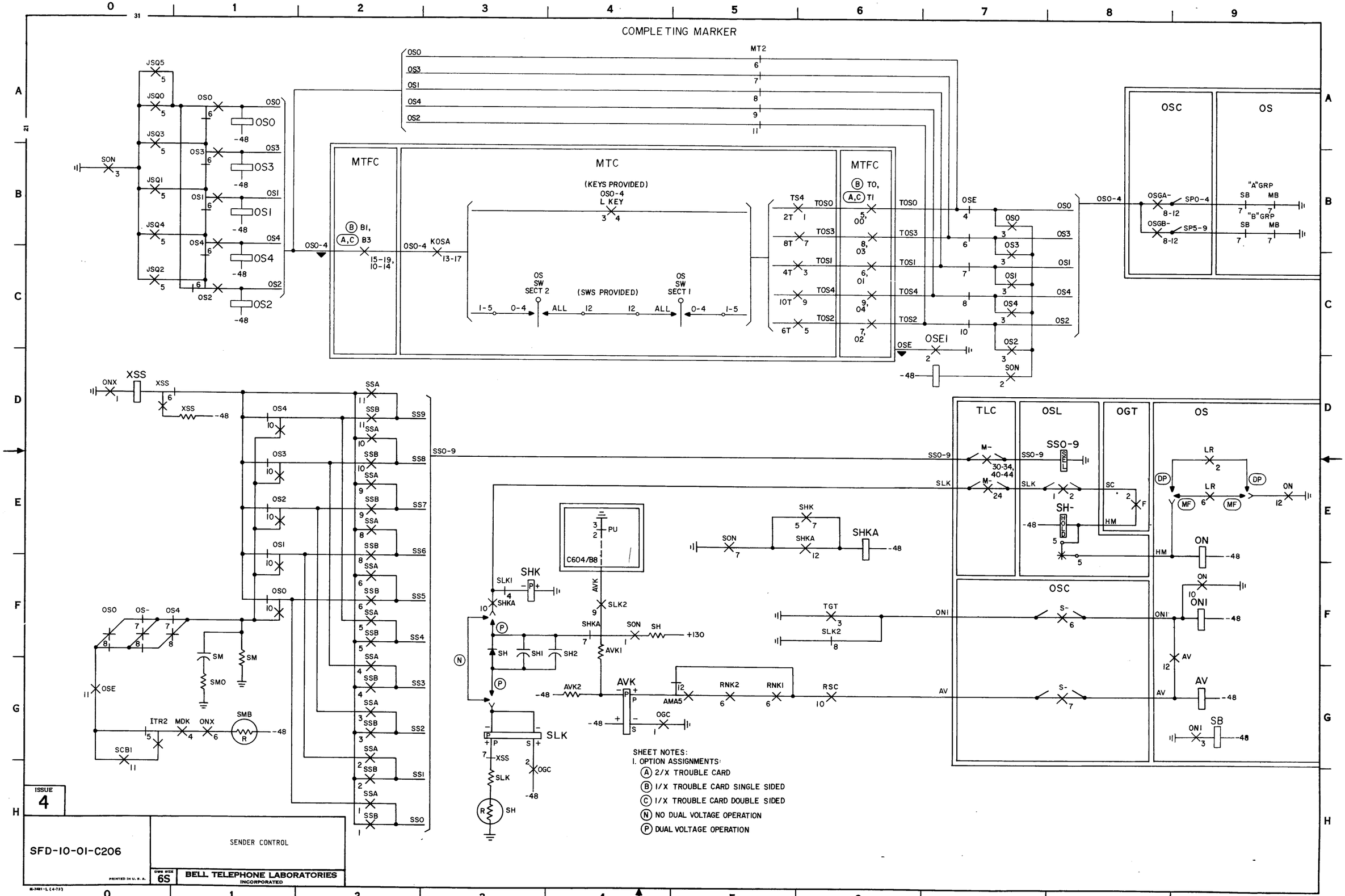
COMPLETING MARKER
MTFC
MTC
(KEYS PROVIDED)
OSO-4
L KEY
(SWS PROVIDED)
OS SW SECT 2
OS SW SECT 1
MTFC
OSC
OS
"A"GRP
"B"GRP
TLC
OSL
OGT
OS
OSC
SHEET NOTES:
1. OPTION ASSIGNMENTS:
(A) 2/X TROUBLE CARD
(B) 1/X TROUBLE CARD SINGLE SIDED
(C) 1/X TROUBLE CARD DOUBLE SIDED
(N) NO DUAL VOLTAGE OPERATION
(P) DUAL VOLTAGE OPERATION
ISSUE 4
SFD-10-01-C206
SENDER CONTROL
BELL TELEPHONE LABORATORIES INCORPORATED
DWG SIZE 6S
PRINTED IN U.S.A.
SFD-10-01-C206

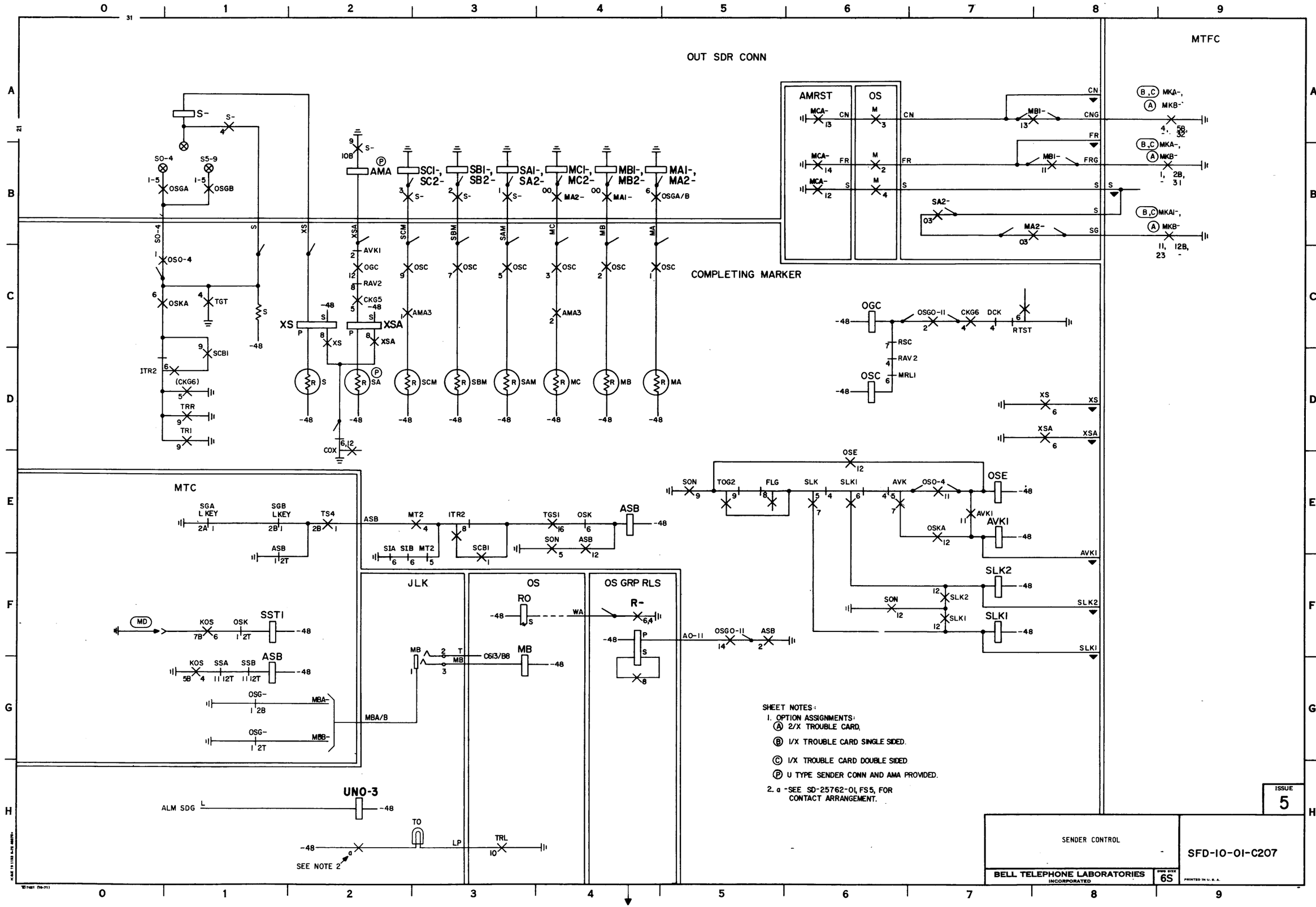

SFD-10-01-C207

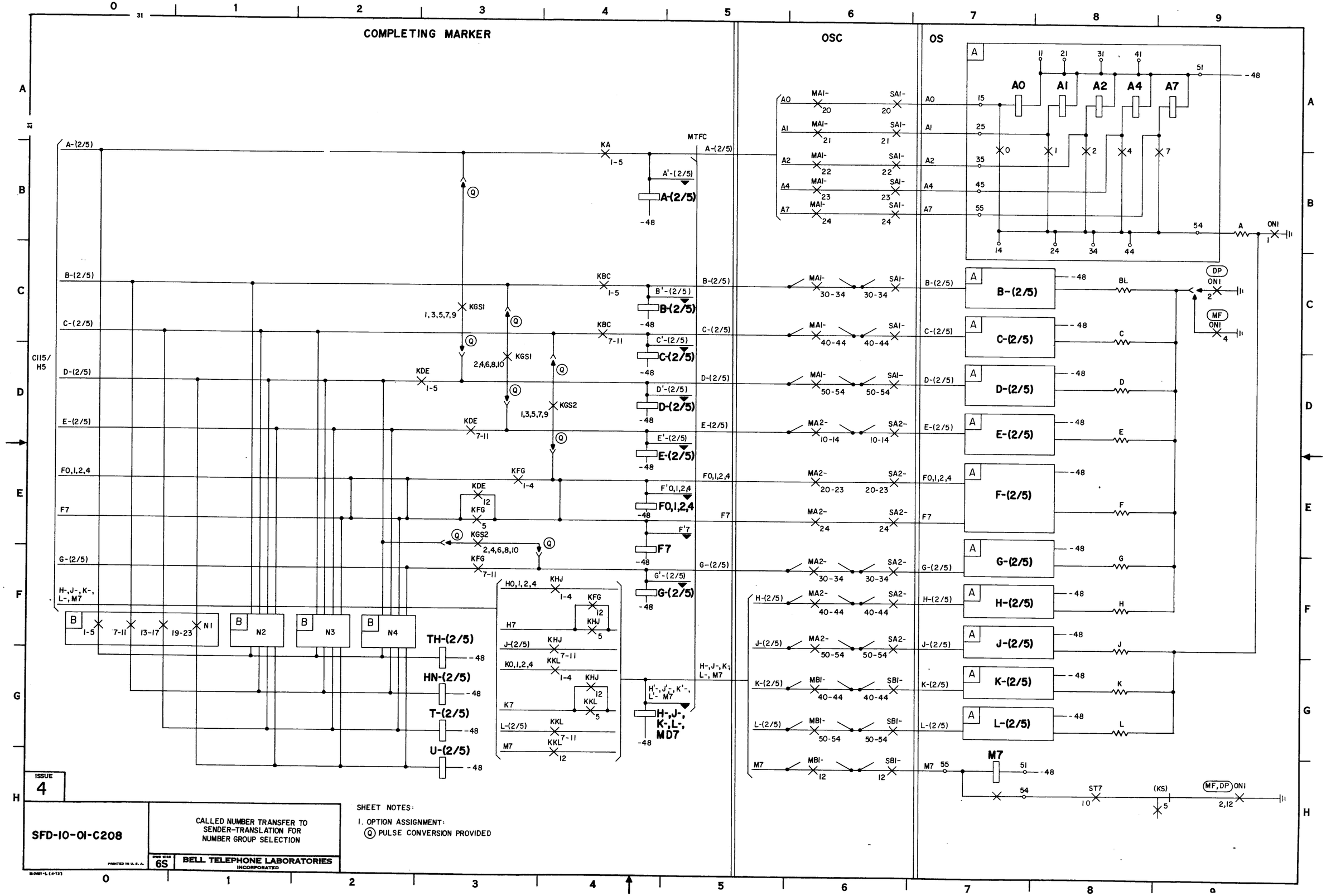

SFD-10-01-C208

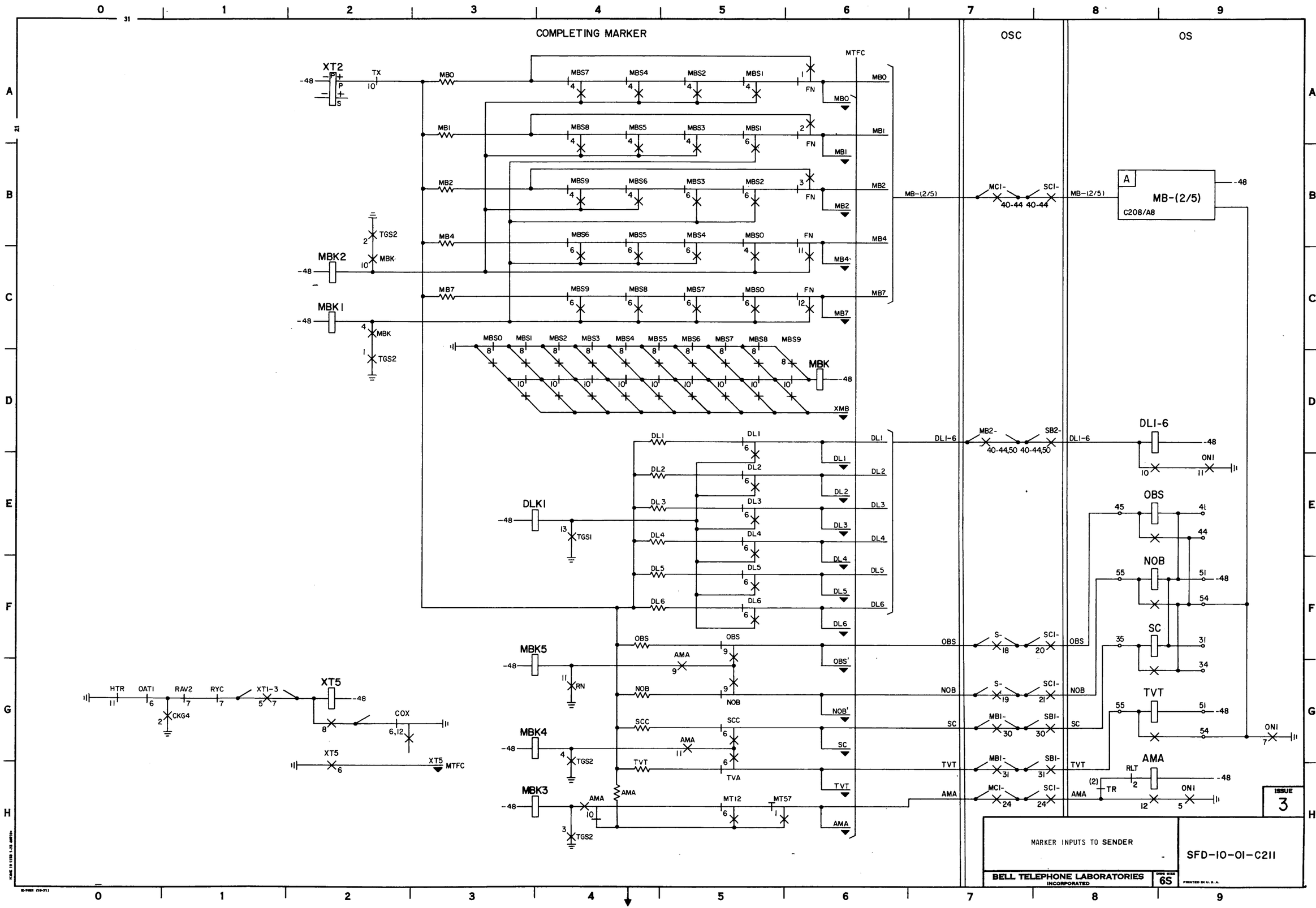

SFD-10-01-C211

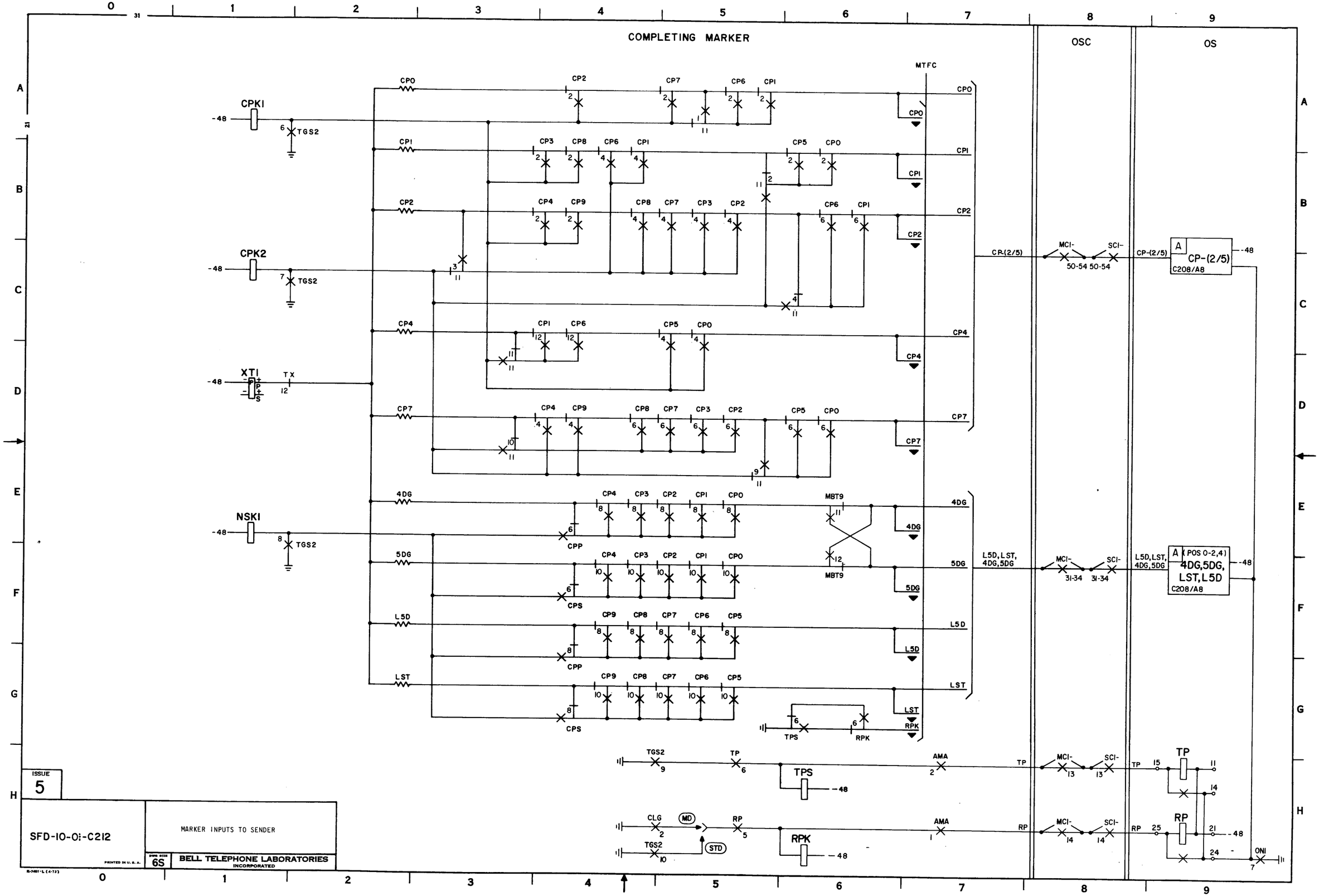
COMPLETING MARKER
OSC
OS
MTFC
CPK1
CPK2
XT1
NSKI
TGS2
CPO
CP1
CP2
CP4
CP7
4DG
5DG
L5D
LST
CPP
CPS
MBT9
TPS
RPK
TP
RP
CLG
MD
STD
AMA
CR-(2/5)
L5D, LST, 4DG, 5DG
MCI-
SCI-
50-54
31-34
CP-(2/5)
C208/A8
4DG,5DG, LST,L5D
(POS 0-2,4)
ONI
ISSUE 5
SFD-10-01-C212
MARKER INPUTS TO SENDER
BELL TELEPHONE LABORATORIES INCORPORATED
6S
SFD-10-01-C212

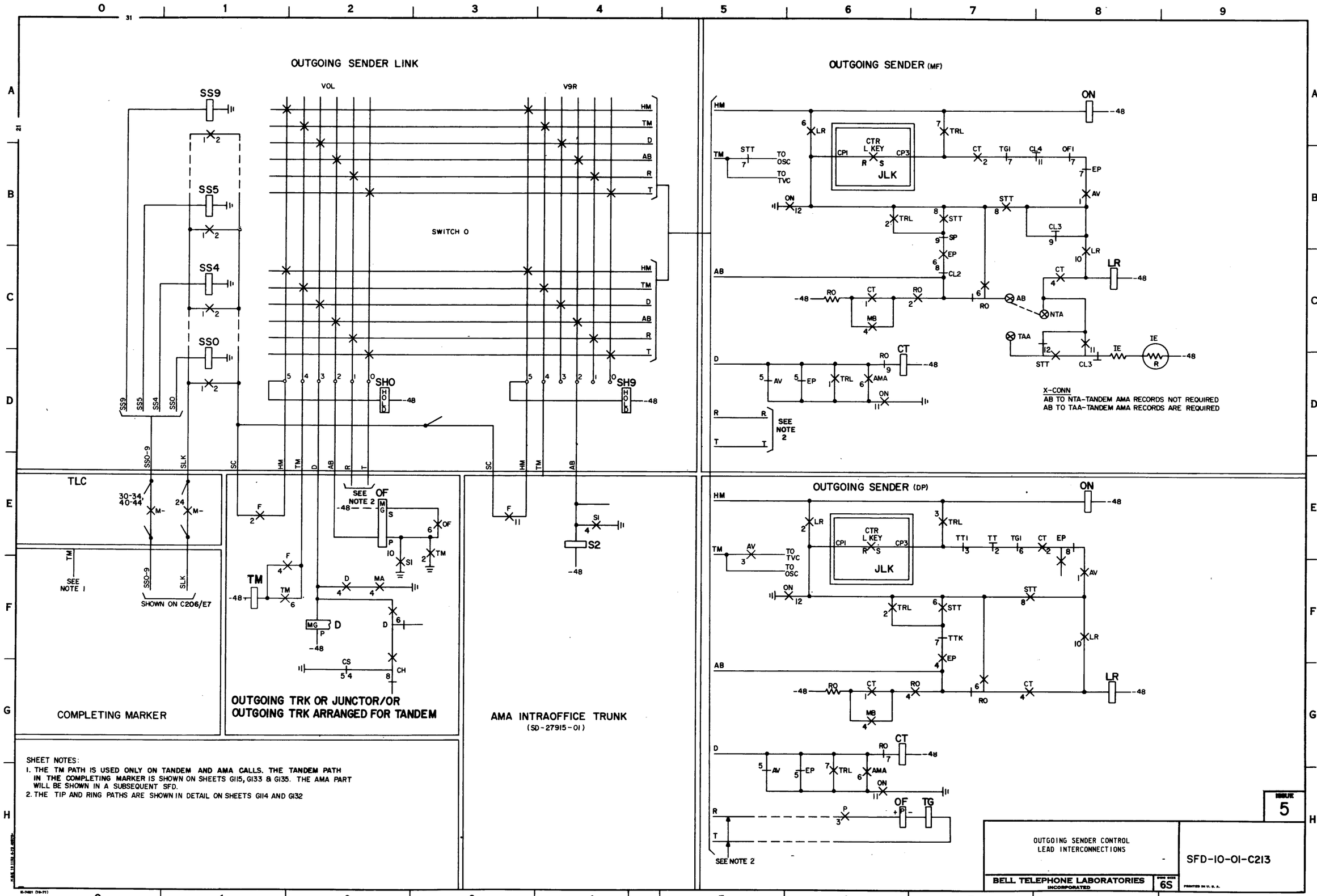

SFD-10-01-C213

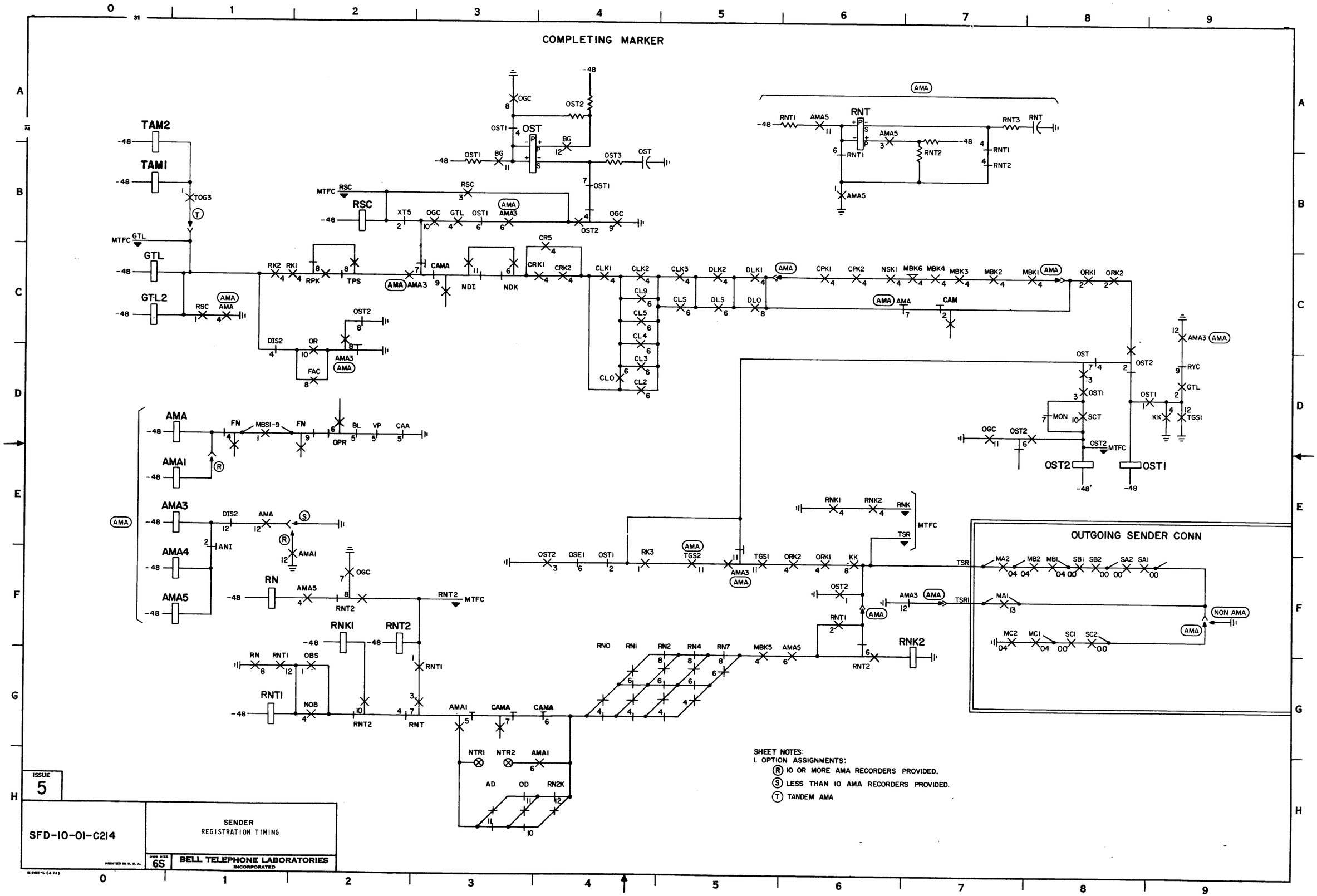
COMPLETING MARKER
TAM2
TAM1
GTL
GTL2
RSC
OST
OST1
OST2
OST3
RNT
RNT1
RNT2
RNT3
AMA
AMA1
AMA3
AMA4
AMA5
RN
RNK1
RNK2
OUTGOING SENDER CONN
NON AMA
SHEET NOTES:
1. OPTION ASSIGNMENTS:
(R) 10 OR MORE AMA RECORDERS PROVIDED.
(S) LESS THAN 10 AMA RECORDERS PROVIDED.
(T) TANDEM AMA
ISSUE 5
SFD-10-01-C214
SENDER
REGISTRATION TIMING
DWG SIZE 6S
BELL TELEPHONE LABORATORIES
INCORPORATED
PRINTED IN U.S.A.
SFD-10-01-C214

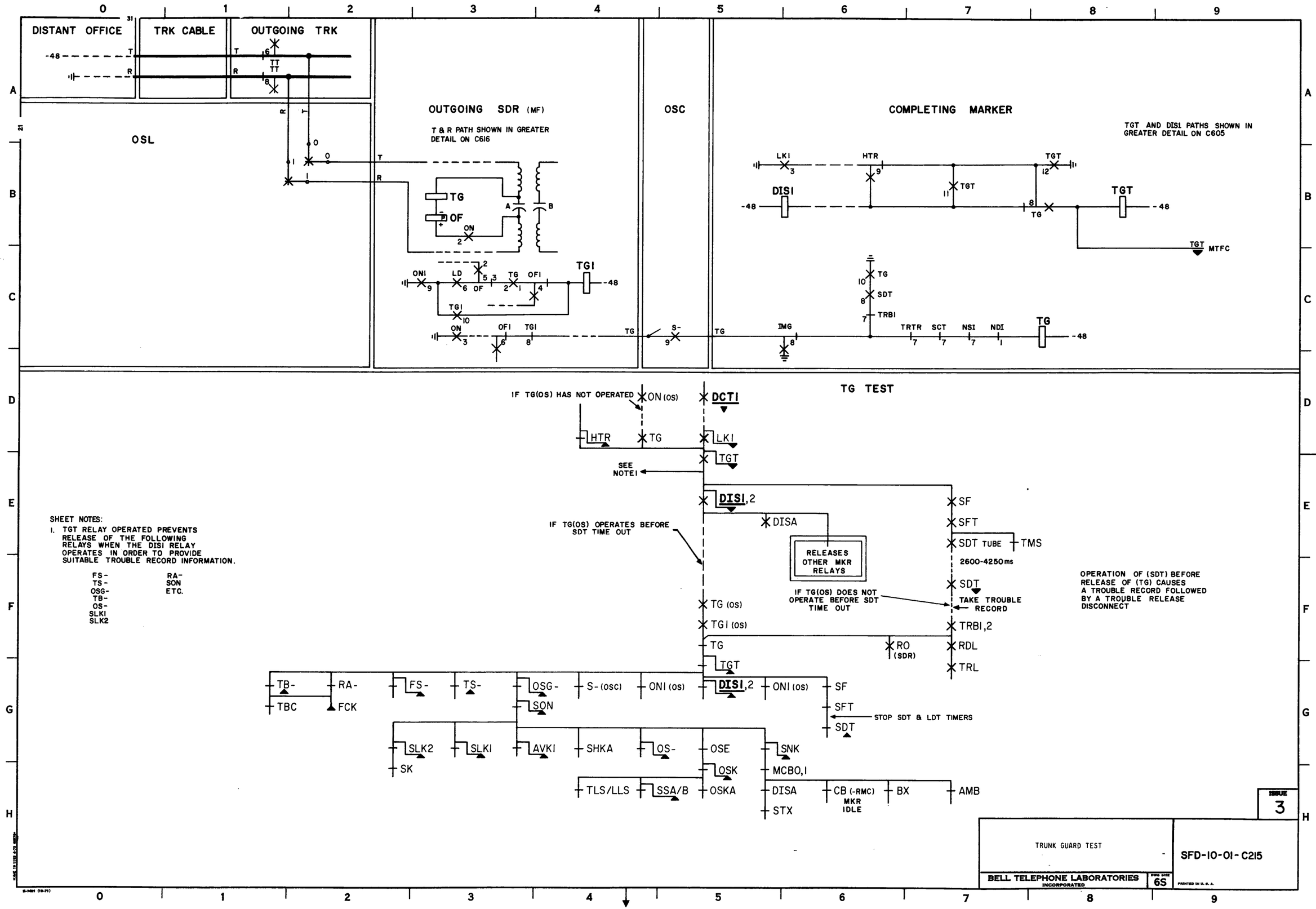

SFD-10-01-C215

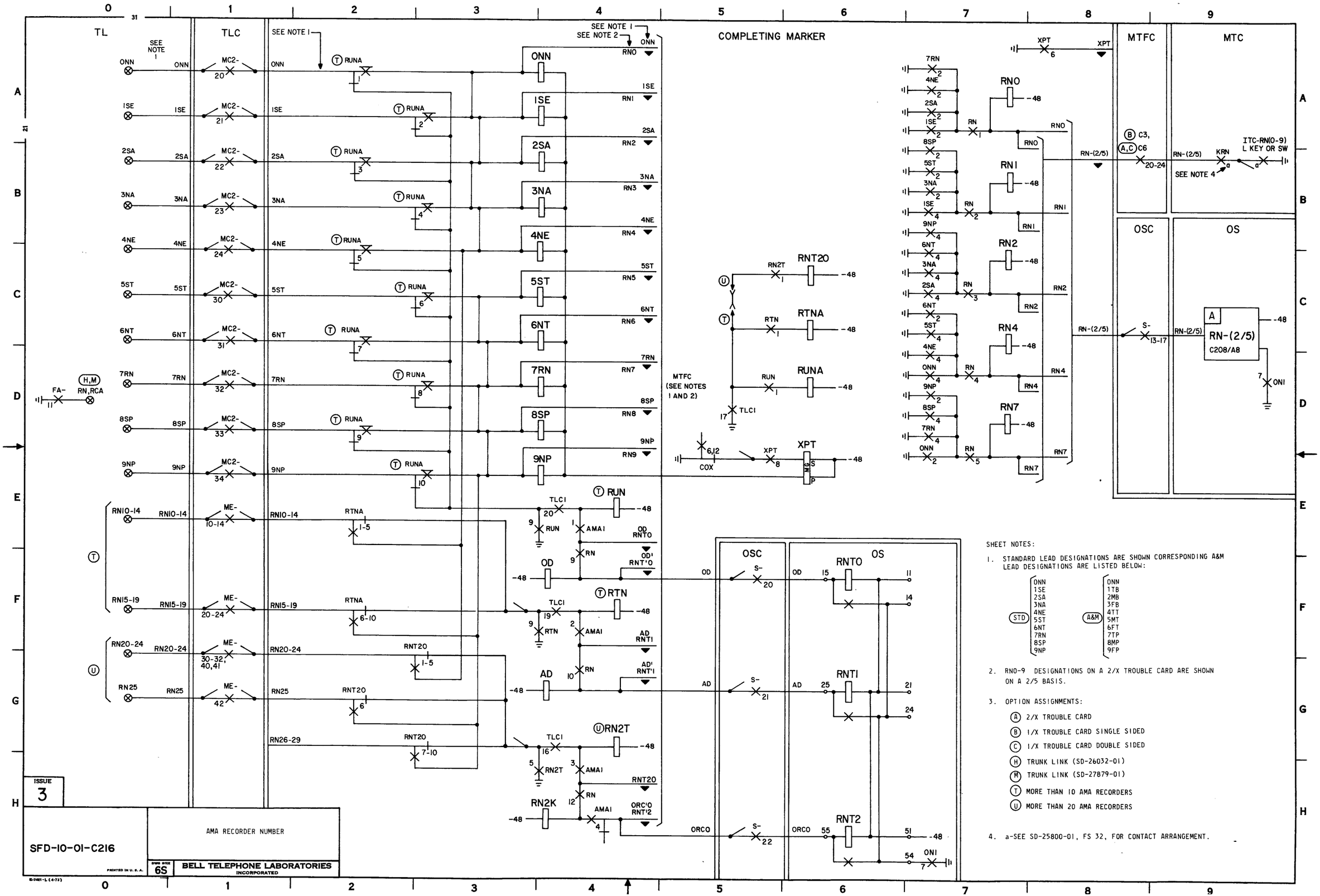

SHEET NOTES:

1. STANDARD LEAD DESIGNATIONS ARE SHOWN CORRESPONDING A&M LEAD DESIGNATIONS ARE LISTED BELOW:

STD	A&M
ONN	ONN
1SE	1TB
2SA	2MB
3NA	3FB
4NE	4TT
5ST	5MT
6NT	6FT
7RN	7TP
8SP	8MP
9NP	9FP

2. RN0-9 DESIGNATIONS ON A 2/X TROUBLE CARD ARE SHOWN ON A 2/5 BASIS.

3. OPTION ASSIGNMENTS:

- (A) 2/X TROUBLE CARD
- (B) 1/X TROUBLE CARD SINGLE SIDED
- (C) 1/X TROUBLE CARD DOUBLE SIDED
- (H) TRUNK LINK (SD-26032-01)
- (M) TRUNK LINK (SD-27879-01)
- (T) MORE THAN 10 AMA RECORDERS
- (U) MORE THAN 20 AMA RECORDERS

4. a-SEE SD-25800-01, FS 32, FOR CONTACT ARRANGEMENT.

ISSUE 3

SFD-10-01-C216

BELL TELEPHONE LABORATORIES INCORPORATED

DWG SIZE 6S

PRINTED IN U.S.A.

SFD-10-01-C216

ESTABLISHING OUTGOING TRUNK CONNECTION

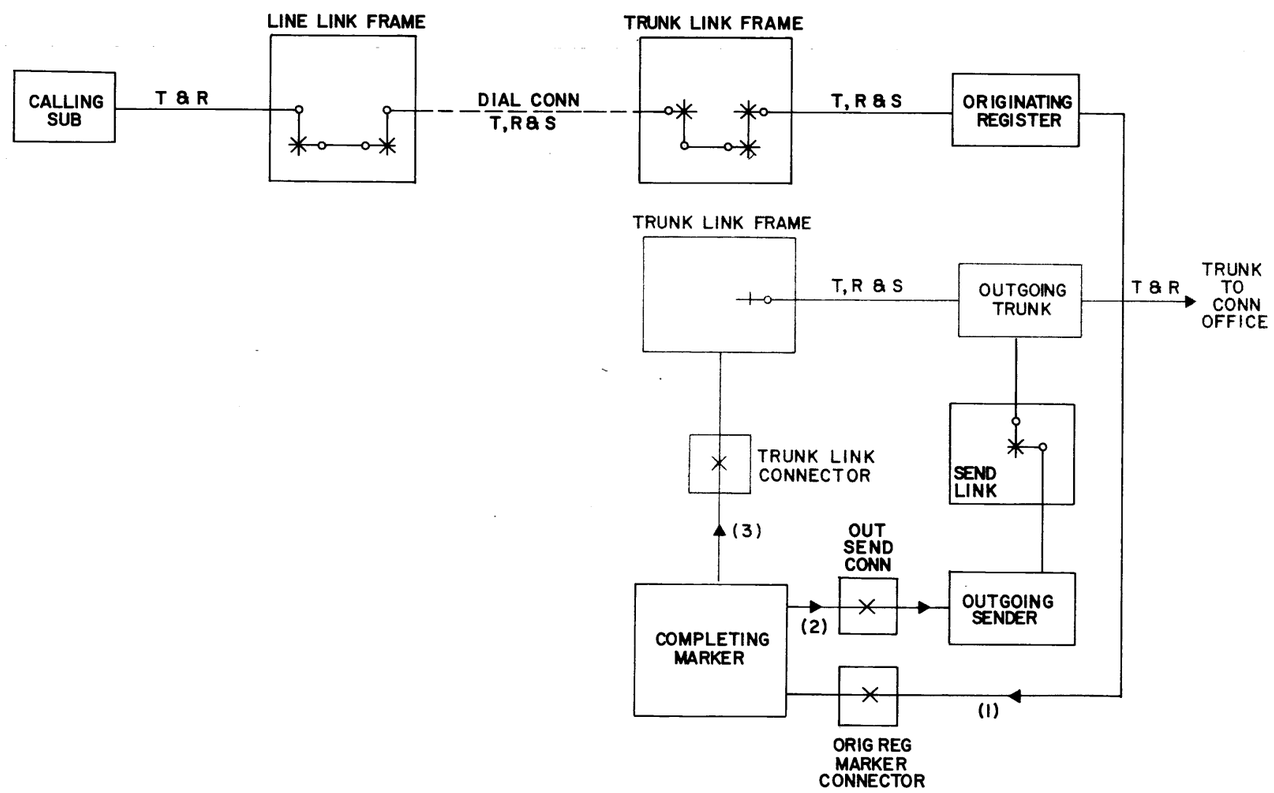

INDEX

CAUTION!

DUE TO THE SIMPLIFIED NATURE OF THIS DOCUMENT, INFORMATION SHOWN MAY NOT BE COMPLETE.

ISSUE 3

PART C3
CONNECTION TO TRUNK LINK
FRAME AND TRUNK

SFD-10-01-C301

BELL TELEPHONE LABORATORIES INCORPORATED

DWG SIZE 6S

PRINTED IN U.S.A.

SFD-10-01-C301
2 SHEETS, SH 1

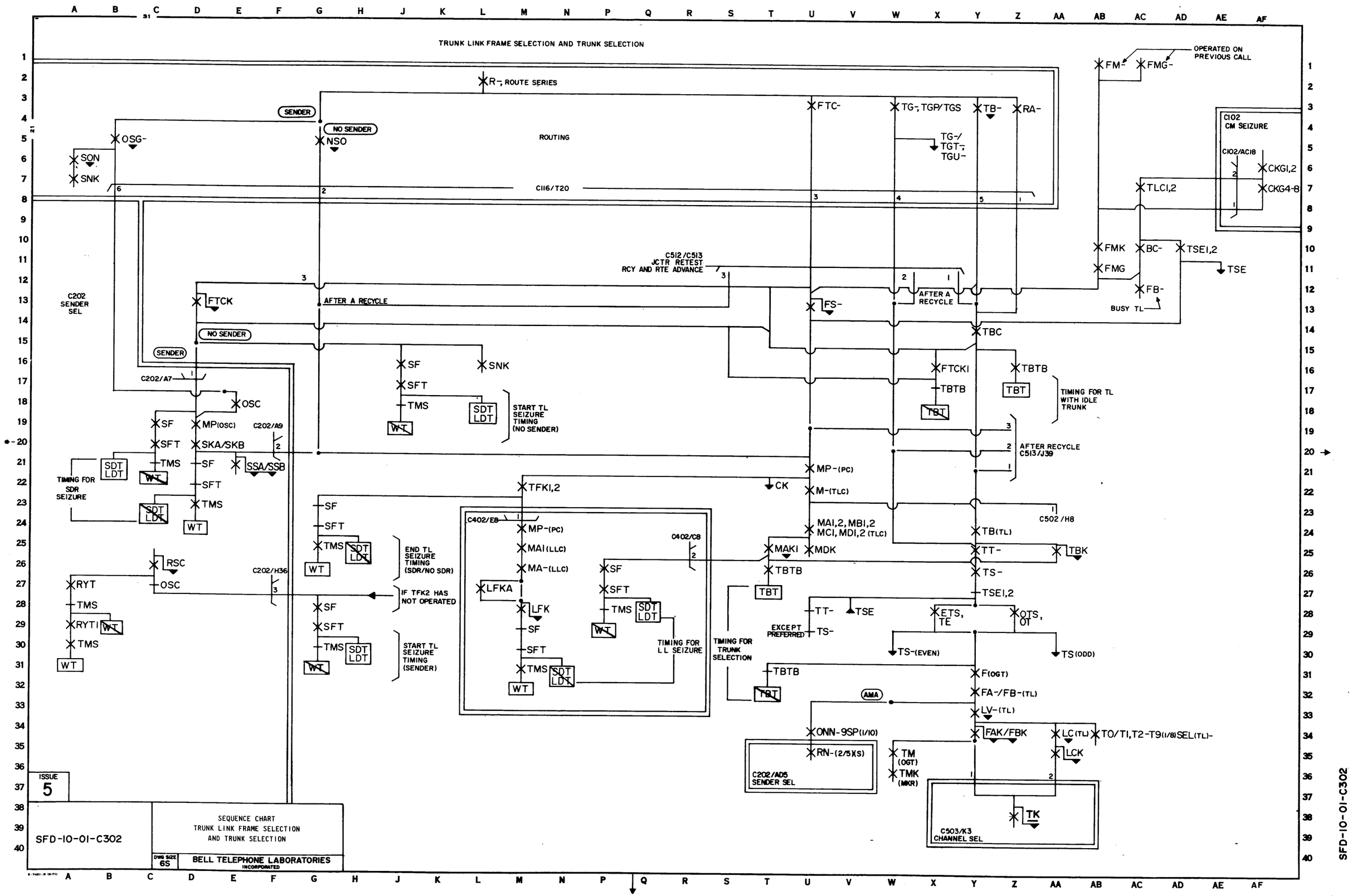

SFD-10-01-C302

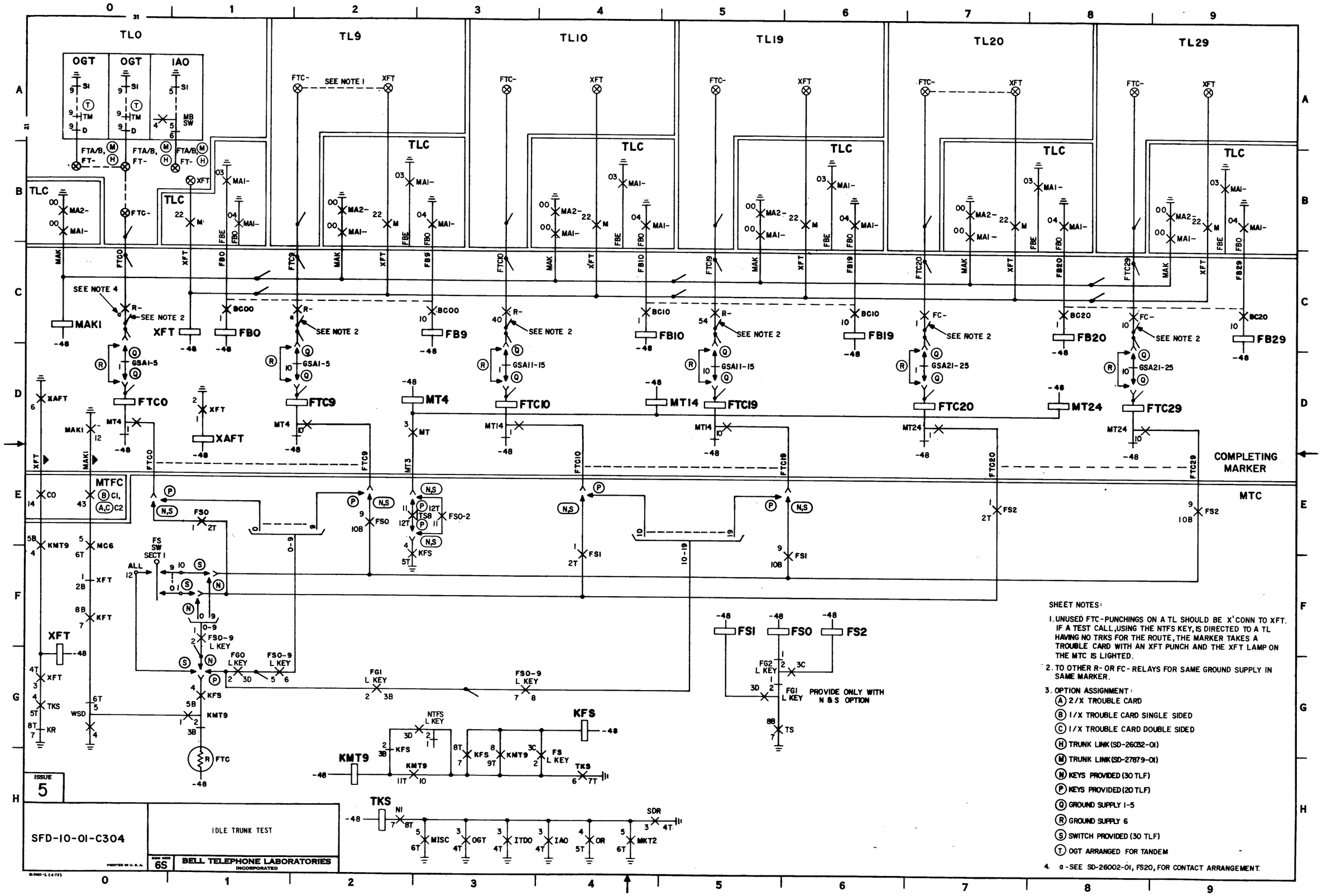
TL0
TL9
TL10
TL19
TL20
TL29
OGT
OGT
IAO
TLC
MTFC
MTC
COMPLETING MARKER
SEE NOTE 1
SEE NOTE 2
SEE NOTE 4
MAK1
XFT
FB0
FB9
FB10
FB19
FB20
FB29
FTC0
FTC9
FTC10
FTC19
FTC20
FTC29
MT4
MT14
MT24
XAFT
KFS
KMT9
TKS
FS0
FS1
FS2
FS0-2
FS0-9 L KEY
FG0 L KEY
FG1 L KEY
FG2 L KEY
NTFS L KEY
FS L KEY
PROVIDE ONLY WITH N & S OPTION
ALL
FS SW SECT 1
MISC
OGT
ITDO
IAO
OR
MKT2
SDR
ISSUE 5
SFD-10-01-C304
IDLE TRUNK TEST
BELL TELEPHONE LABORATORIES INCORPORATED
SHEET NOTES:
1. UNUSED FTC-PUNCHINGS ON A TL SHOULD BE X'CONN TO XFT. IF A TEST CALL, USING THE NTFS KEY, IS DIRECTED TO A TL HAVING NO TRKS FOR THE ROUTE, THE MARKER TAKES A TROUBLE CARD WITH AN XFT PUNCH AND THE XFT LAMP ON THE MTC IS LIGHTED.
2. TO OTHER R- OR FC- RELAYS FOR SAME GROUND SUPPLY IN SAME MARKER.
3. OPTION ASSIGNMENT:
(A) 2/X TROUBLE CARD
(B) 1/X TROUBLE CARD SINGLE SIDED
(C) 1/X TROUBLE CARD DOUBLE SIDED
(H) TRUNK LINK (SD-26032-01)
(M) TRUNK LINK (SD-27879-01)
(N) KEYS PROVIDED (30 TLF)
(P) KEYS PROVIDED (20 TLF)
(Q) GROUND SUPPLY 1-5
(R) GROUND SUPPLY 6
(S) SWITCH PROVIDED (30 TLF)
(T) OGT ARRANGED FOR TANDEM
4. a - SEE SD-26002-01, FS20, FOR CONTACT ARRANGEMENT.
SFD-10-01-C304

COMPLETING MARKER
TRUNK LINK FRAME SELECTION

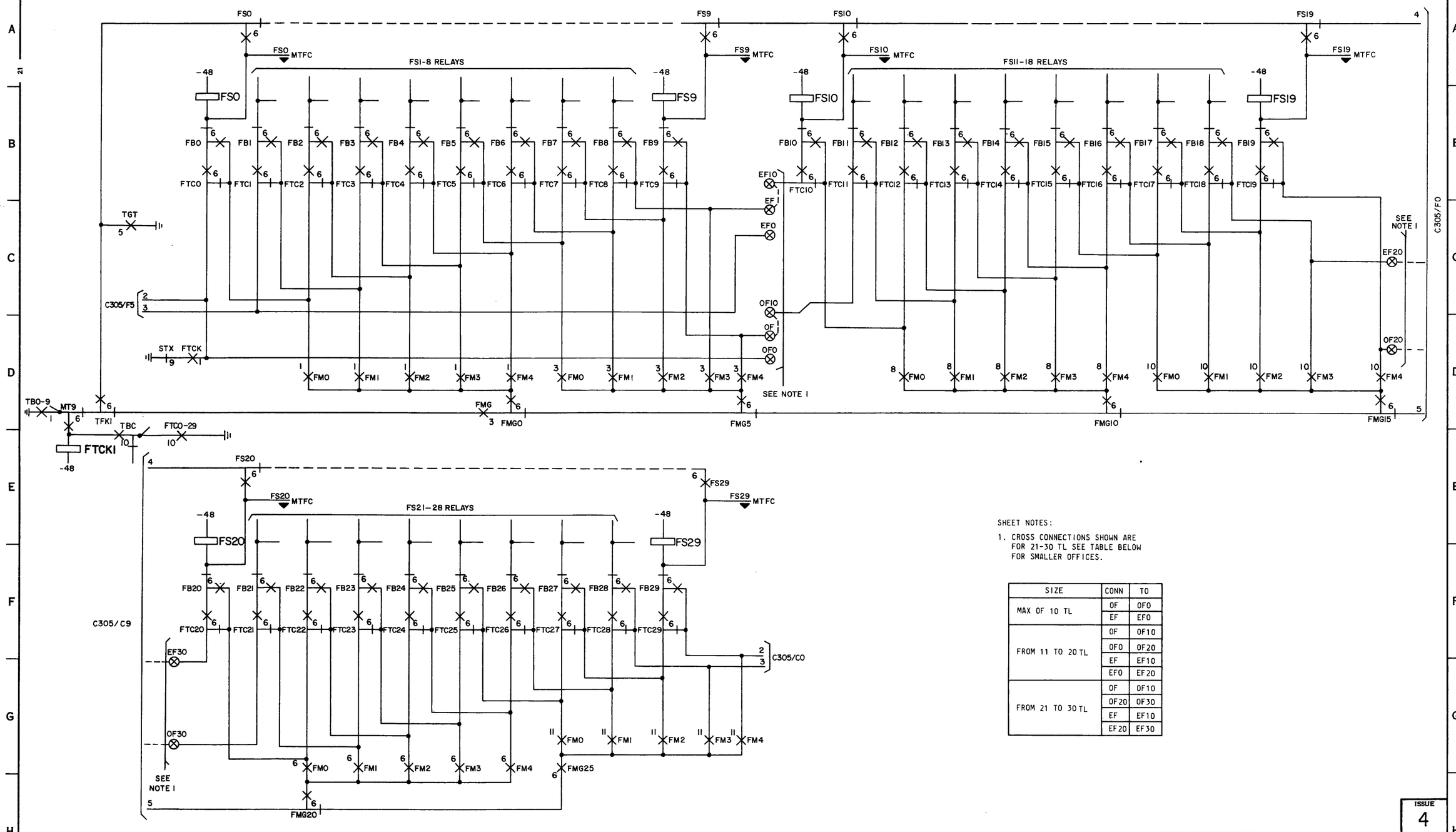

SHEET NOTES:

1. CROSS CONNECTIONS SHOWN ARE FOR 21-30 TL SEE TABLE BELOW FOR SMALLER OFFICES.

SIZE	CONN	TO
MAX OF 10 TL	OF	OF0
	EF	EF0
FROM 11 TO 20 TL	OF	OF10
	OF0	OF20
	EF	EF10
	EF0	EF20
FROM 21 TO 30 TL	OF	OF10
	OF20	OF30
	EF	EF10
	EF20	EF30

ISSUE 4

TRUNK LINK FRAME SELECTION

BELL TELEPHONE LABORATORIES INCORPORATED

DWG SIZE 6S

SFD-10-01-C305

PRINTED IN U.S.A.

SFD-10-01-C305

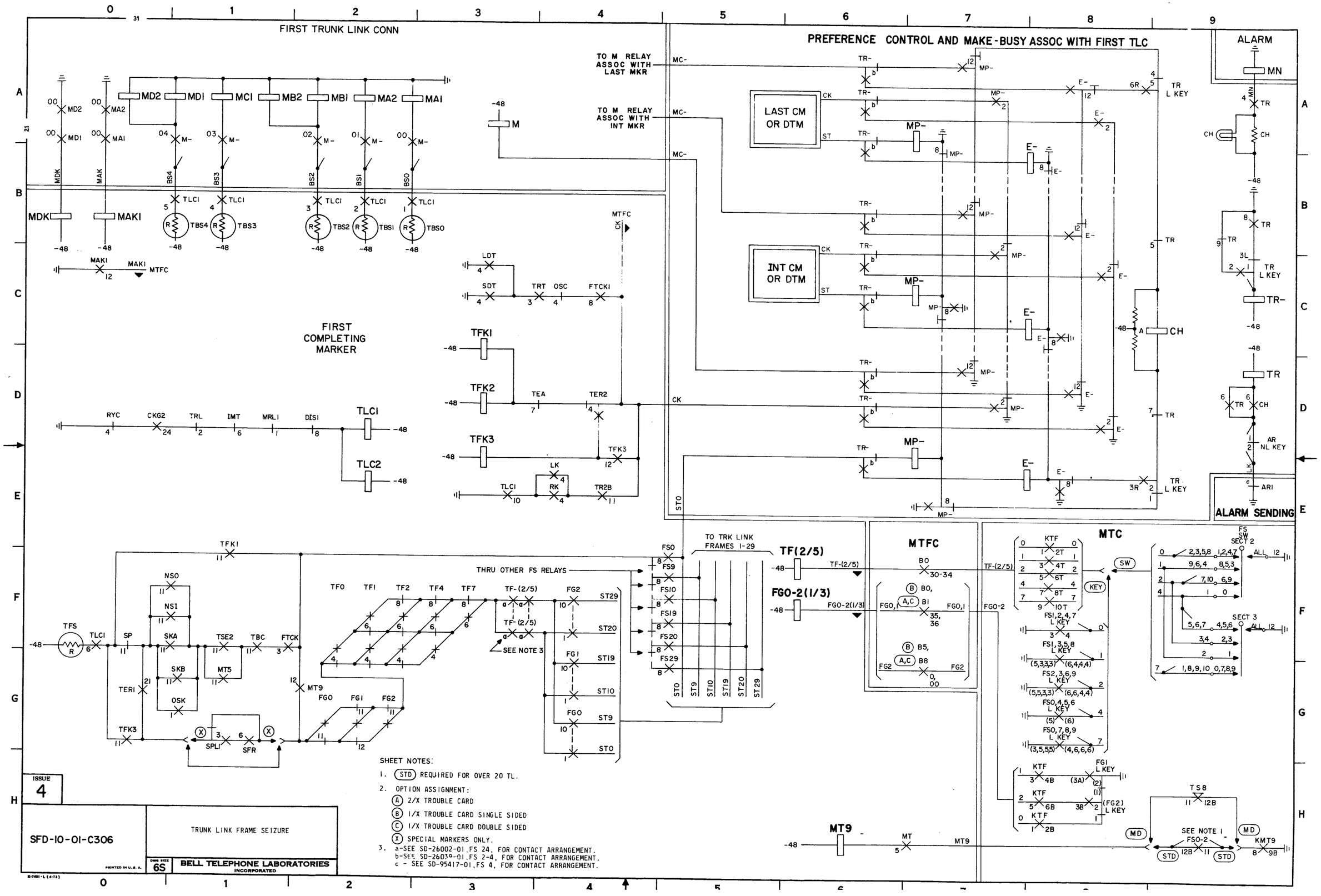

SHEET NOTES:

1. (STD) REQUIRED FOR OVER 20 TL.
2. OPTION ASSIGNMENT:
   - (A) 2/X TROUBLE CARD
   - (B) 1/X TROUBLE CARD SINGLE SIDED
   - (C) 1/X TROUBLE CARD DOUBLE SIDED
   - (X) SPECIAL MARKERS ONLY.
3. a-SEE SD-26002-01, FS 24, FOR CONTACT ARRANGEMENT.
   b-SEE SD-26039-01, FS 2-4, FOR CONTACT ARRANGEMENT.
   c - SEE SD-95417-01, FS 4, FOR CONTACT ARRANGEMENT.

ISSUE 4

SFD-10-01-C306

TRUNK LINK FRAME SEIZURE

DWG SIZE 6S

BELL TELEPHONE LABORATORIES INCORPORATED

PRINTED IN U.S.A.

SFD-10-01-C306

COMPLETING MARKER

SHEET NOTES:

1.

SIZE	CONNECT	TO
MAX OF 10 TL	FS1	FS2
FROM 11 TO 20 TL	FS2	FS3
OVER 20	NONE	

2. OPTION ASSIGNMENT:
(A) 2/X TROUBLE CARD
(B) 1/X TROUBLE CARD SINGLE SIDED
(C) 1/X TROUBLE CARD DOUBLE SIDED

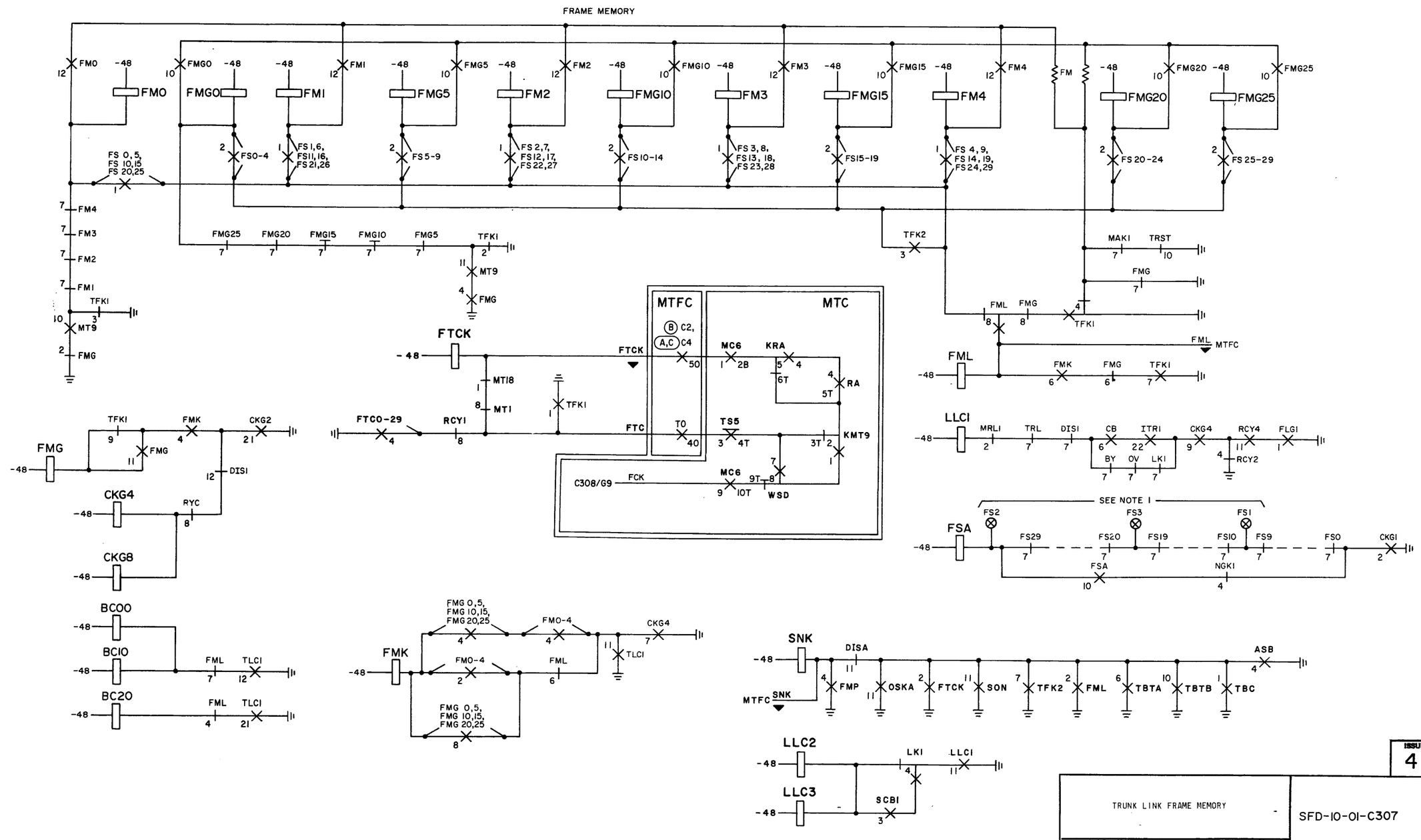

ISSUE 4

TRUNK LINK FRAME MEMORY

BELL TELEPHONE LABORATORIES INCORPORATED

DWG SIZE 6S

SFD-10-01-C307

PRINTED IN U. S. A.

SFD-10-01-C307

SHEET NOTES:
1. OPTION ASSIGNMENT:
Ⓐ 2/X TROUBLE CARD
Ⓑ 1/X TROUBLE CARD SINGLE SIDED
Ⓒ 1/X TROUBLE CARD DOUBLE SIDED

COMPLETING MARKER

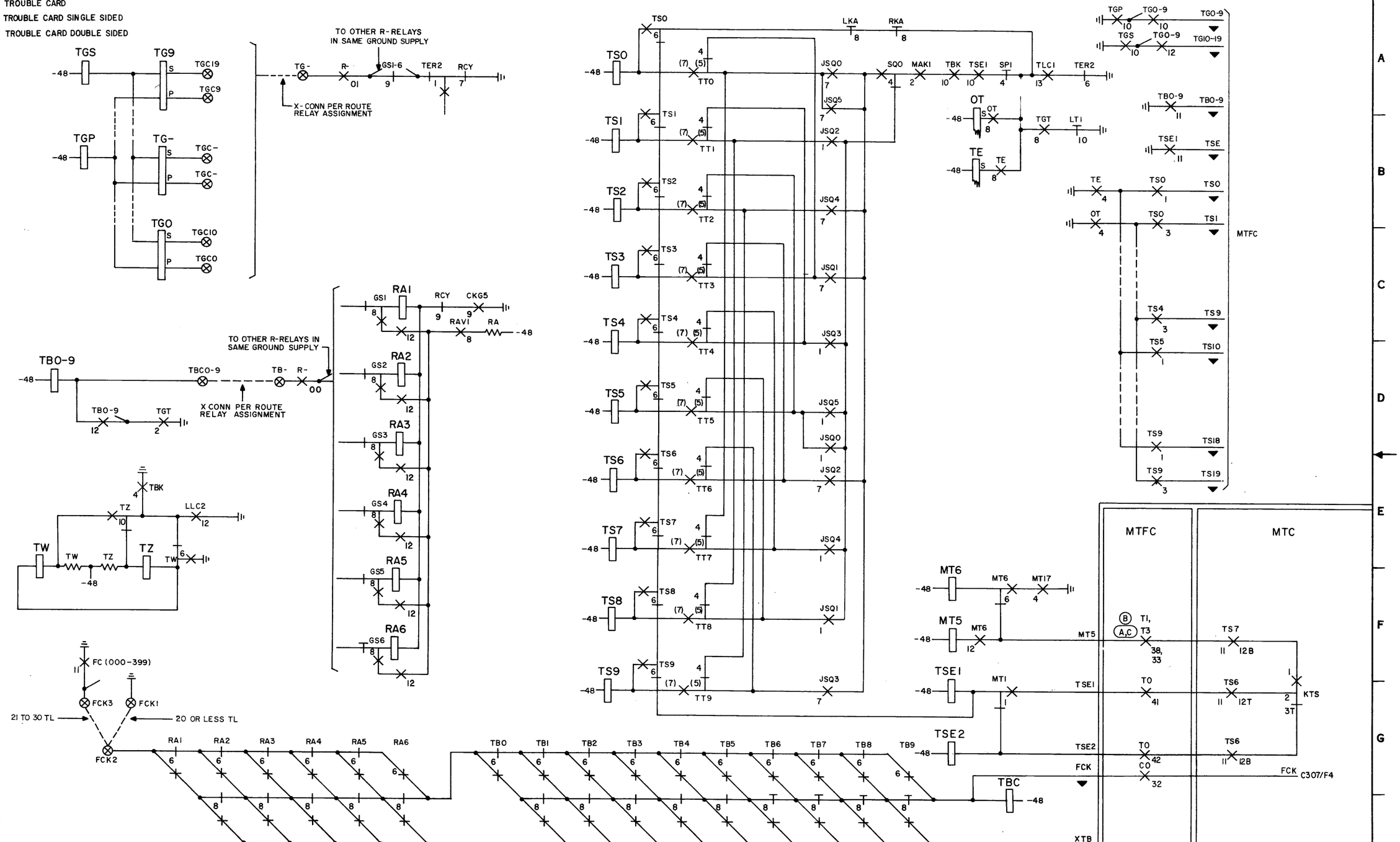

ISSUE 4

SFD-10-01-C308

TRUNK SEIZURE

CODE SIZE 6S

BELL TELEPHONE LABORATORIES INCORPORATED

PRINTED IN U. S. A.

E-7421-L (4-72)

SFD-10-01-C308

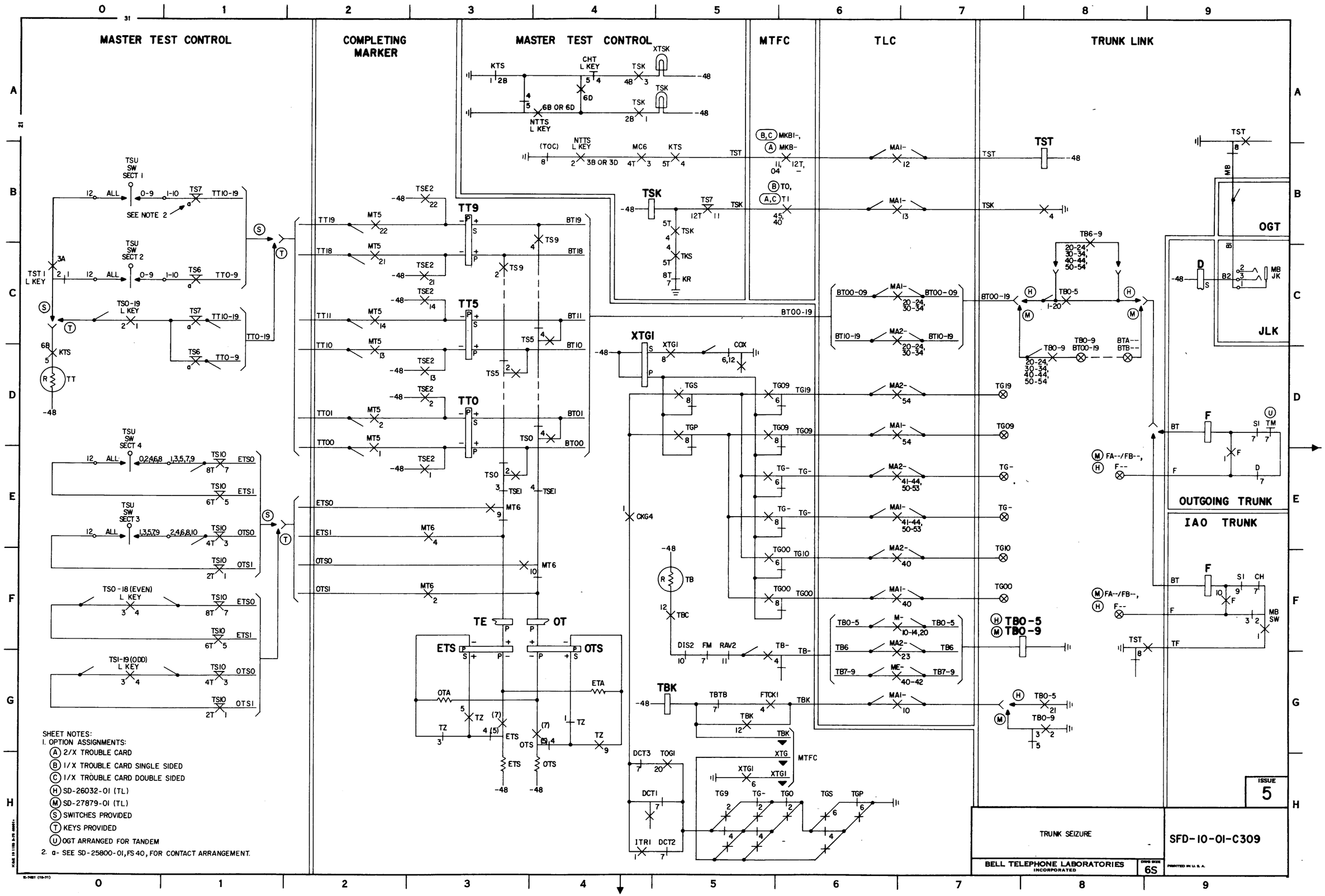

SFD-10-01-C309

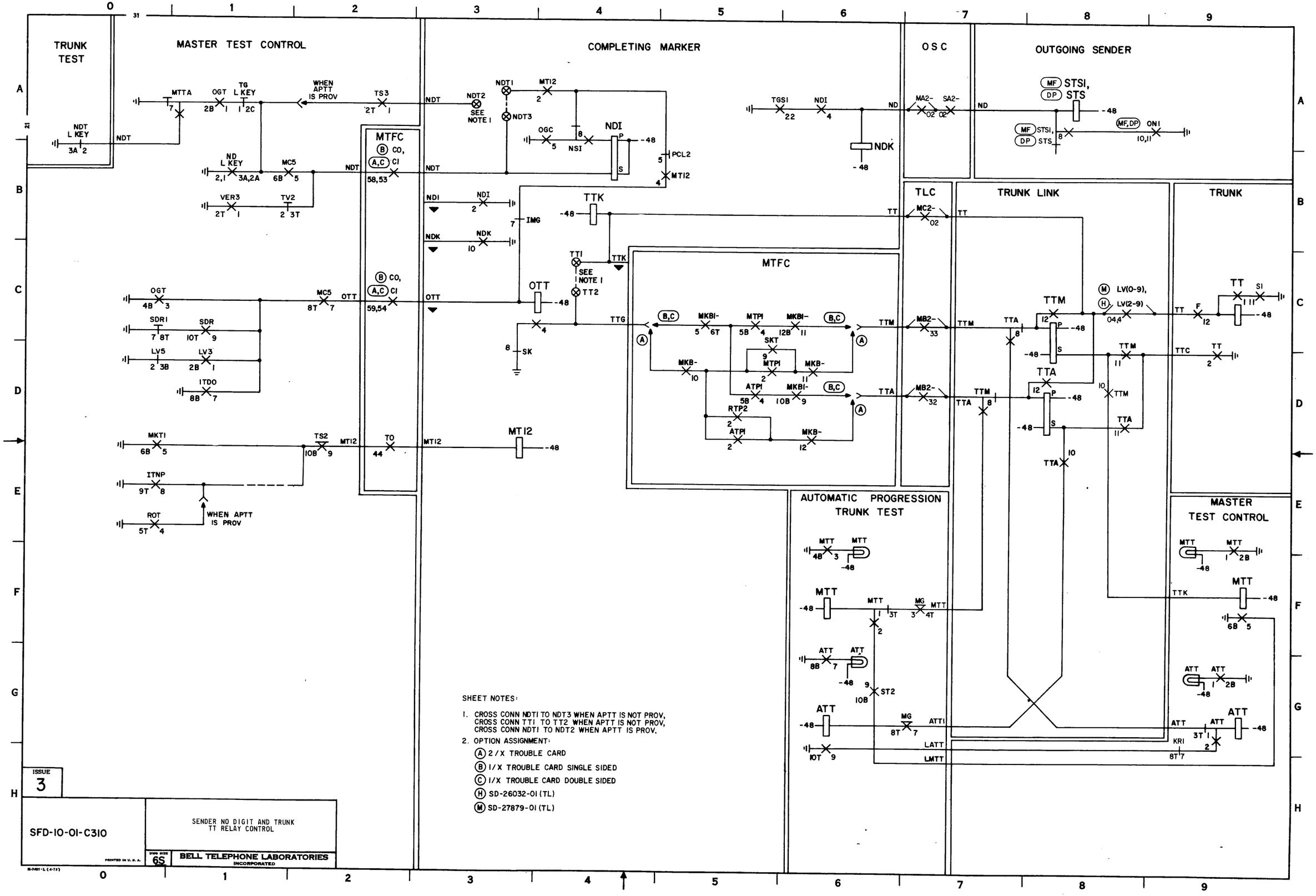
TRUNK TEST
MASTER TEST CONTROL
COMPLETING MARKER
OSC
OUTGOING SENDER
MTFC
TLC
TRUNK LINK
TRUNK
AUTOMATIC PROGRESSION TRUNK TEST
MASTER TEST CONTROL
SHEET NOTES:
1. CROSS CONN NDT1 TO NDT3 WHEN APTT IS NOT PROV, CROSS CONN TT1 TO TT2 WHEN APTT IS NOT PROV, CROSS CONN NDT1 TO NDT2 WHEN APTT IS PROV.
2. OPTION ASSIGNMENT:
(A) 2/X TROUBLE CARD
(B) 1/X TROUBLE CARD SINGLE SIDED
(C) 1/X TROUBLE CARD DOUBLE SIDED
(H) SD-26032-01 (TL)
(M) SD-27879-01 (TL)
ISSUE 3
SFD-10-01-C310
SENDER NO DIGIT AND TRUNK TT RELAY CONTROL
BELL TELEPHONE LABORATORIES INCORPORATED
SFD-10-01-C310

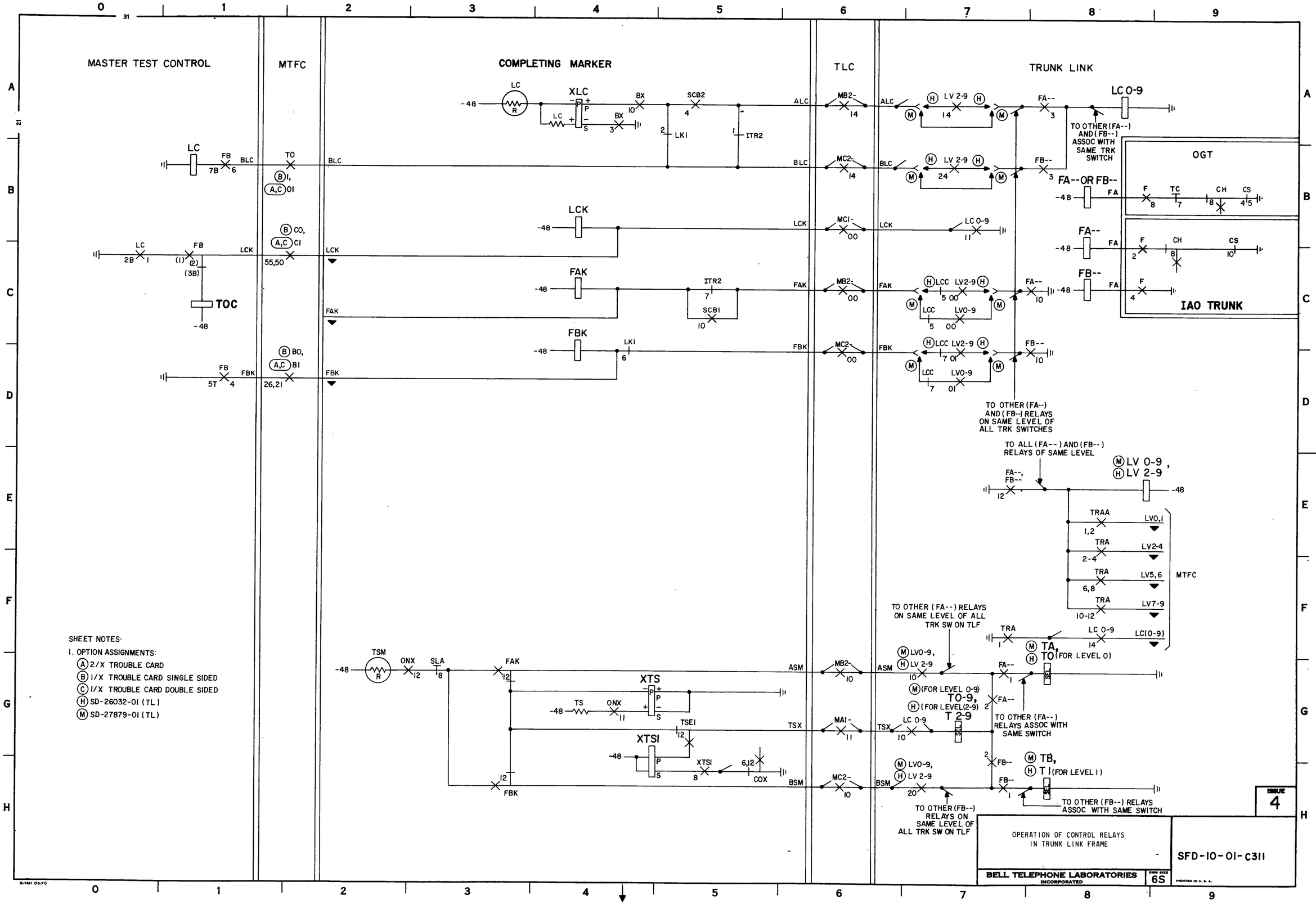

SFD-10-01-C311

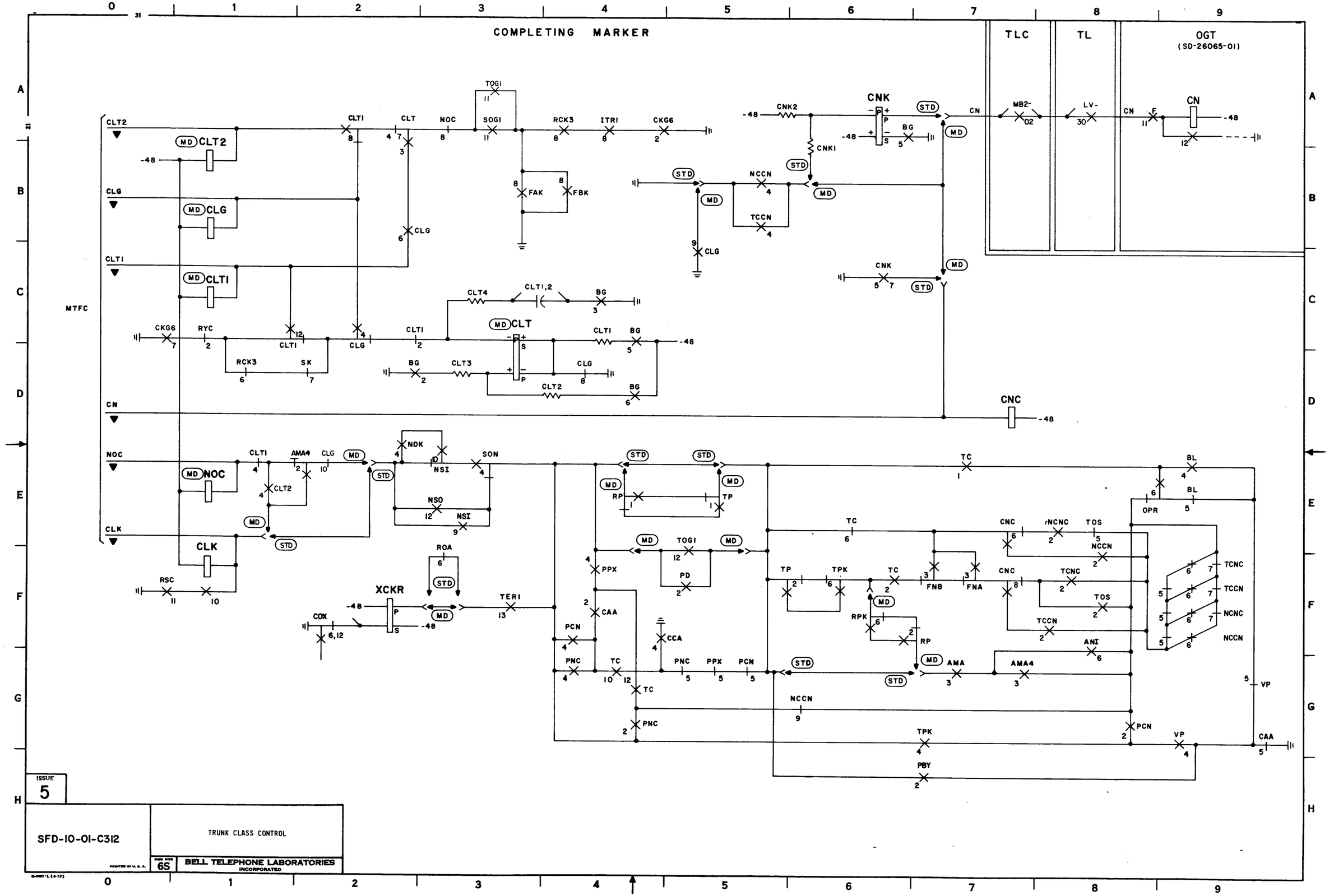

SFD-10-01-C312

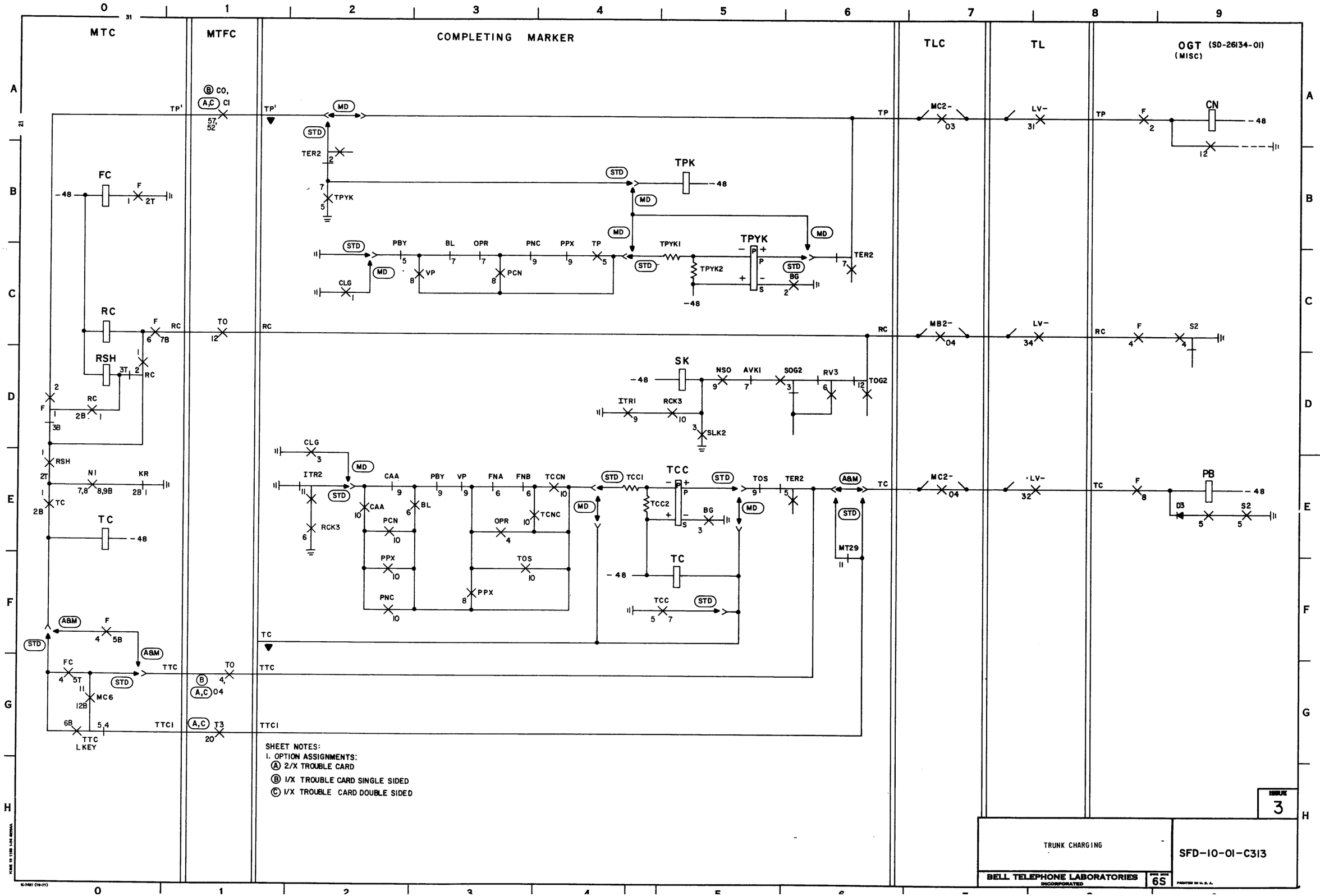

SFD-10-01-C313

COMPLETING MARKER

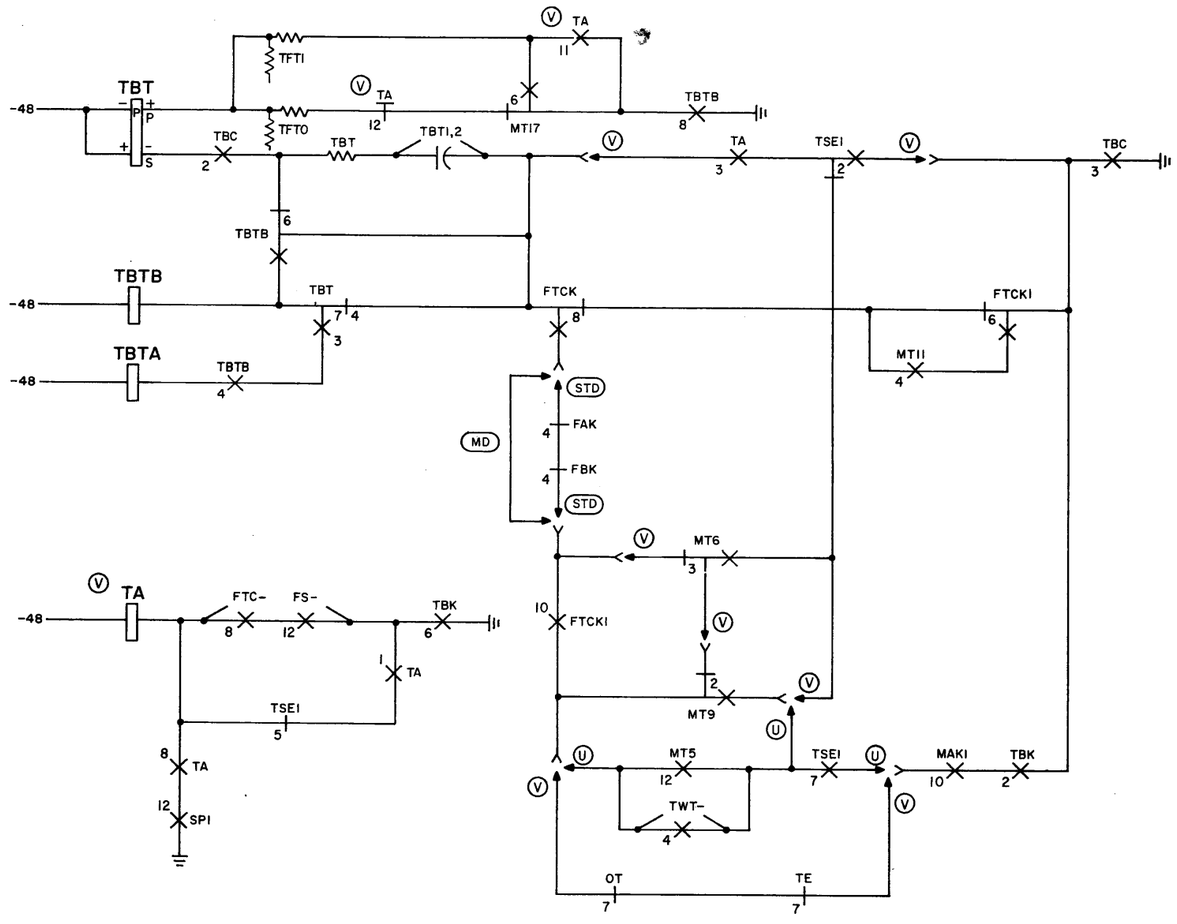

SHEET NOTES:

1. OPTION ASSIGNMENTS:

   (U) (MD)

   (V) (STD) PROVIDES DETECTION OF OPEN BUSY TEST LEADS FOR 2 WAY TRUNKS.

ISSUE 4

SFD-10-01-C314

TRUNK SELECTION TIMING

DWG SHEET 6S

BELL TELEPHONE LABORATORIES INCORPORATED

PRINTED IN U.S.A.

SFD-10-01-C314

ESTABLISHING OUTGOING TRUNK CONNECTION

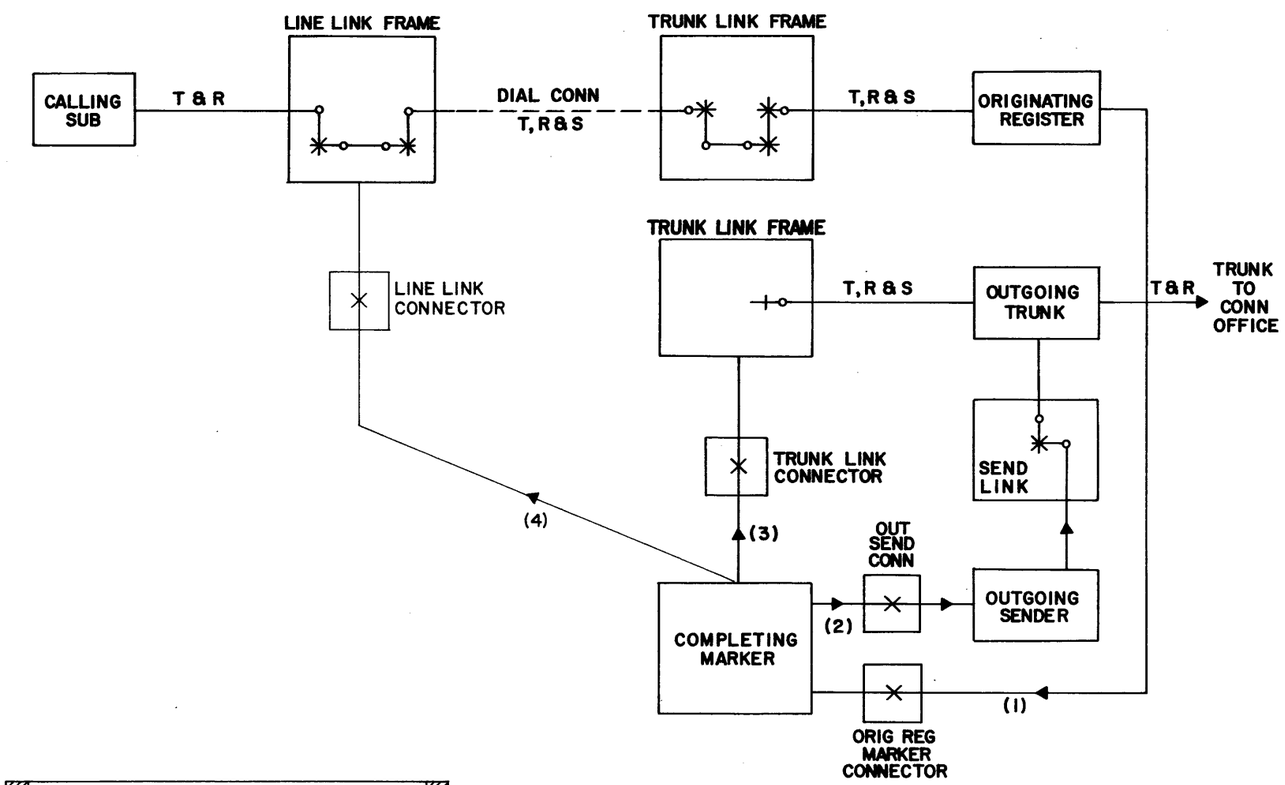

CAUTION !

DUE TO THE SIMPLIFIED NATURE OF THIS DOCUMENT, INFORMATION SHOWN MAY NOT BE COMPLETE.

INDEX

ISSUE 4

PART C4
CONNECTION TO LINE LINK
FRAME

SFD-10-01-C401

BELL TELEPHONE LABORATORIES
INCORPORATED

SYM. DESIG. 6S

PRINTED IN U. S. A.

SFD-10-01-C401
2 SHEETS, SH 1

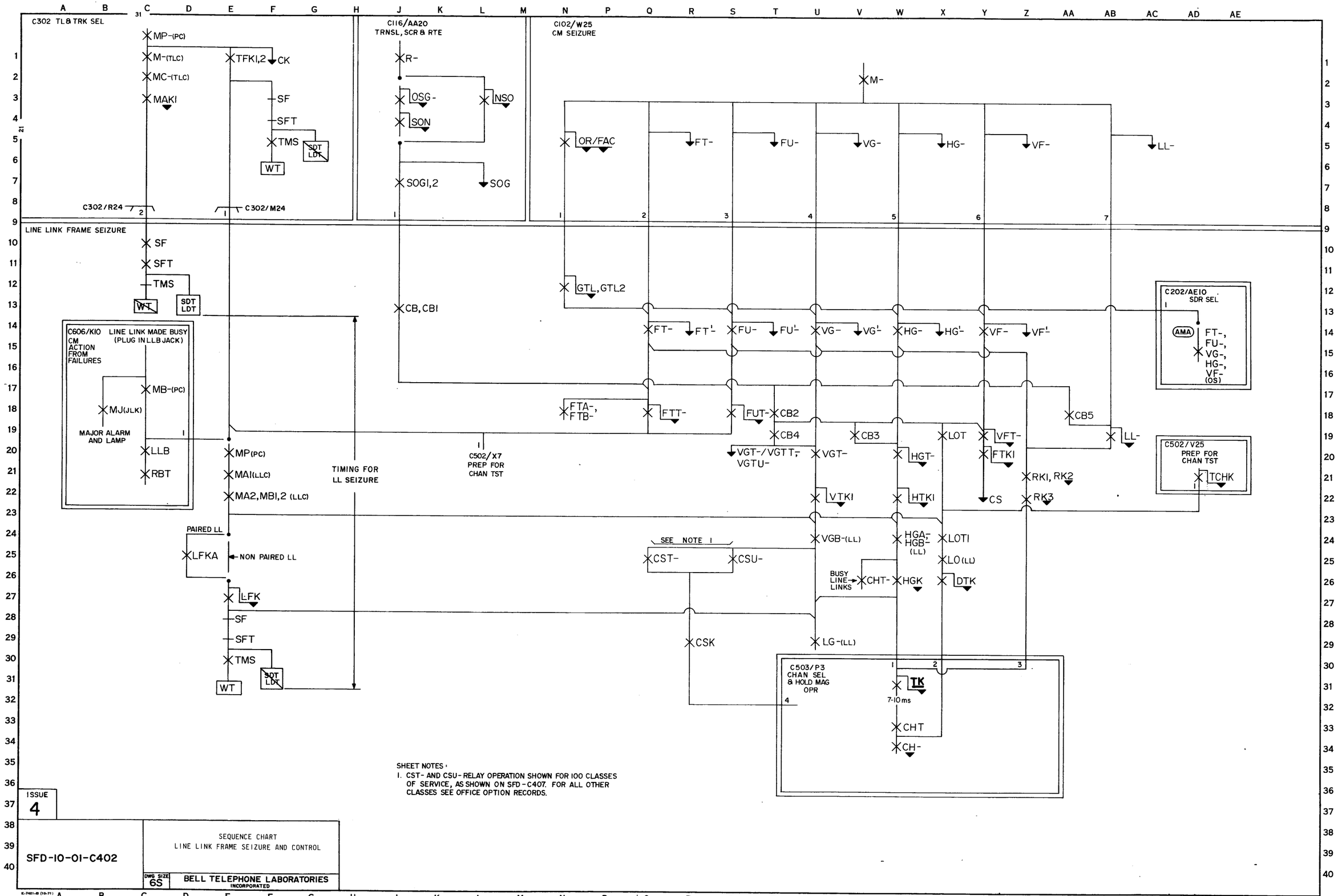

SHEET NOTES:

1. CST- AND CSU- RELAY OPERATION SHOWN FOR 100 CLASSES OF SERVICE, AS SHOWN ON SFD-C407. FOR ALL OTHER CLASSES SEE OFFICE OPTION RECORDS.

ISSUE 4

SFD-10-01-C402

SEQUENCE CHART
LINE LINK FRAME SEIZURE AND CONTROL

DWG SIZE 6S

BELL TELEPHONE LABORATORIES INCORPORATED

E-7421-B (10-71)

SFD-10-01-C402

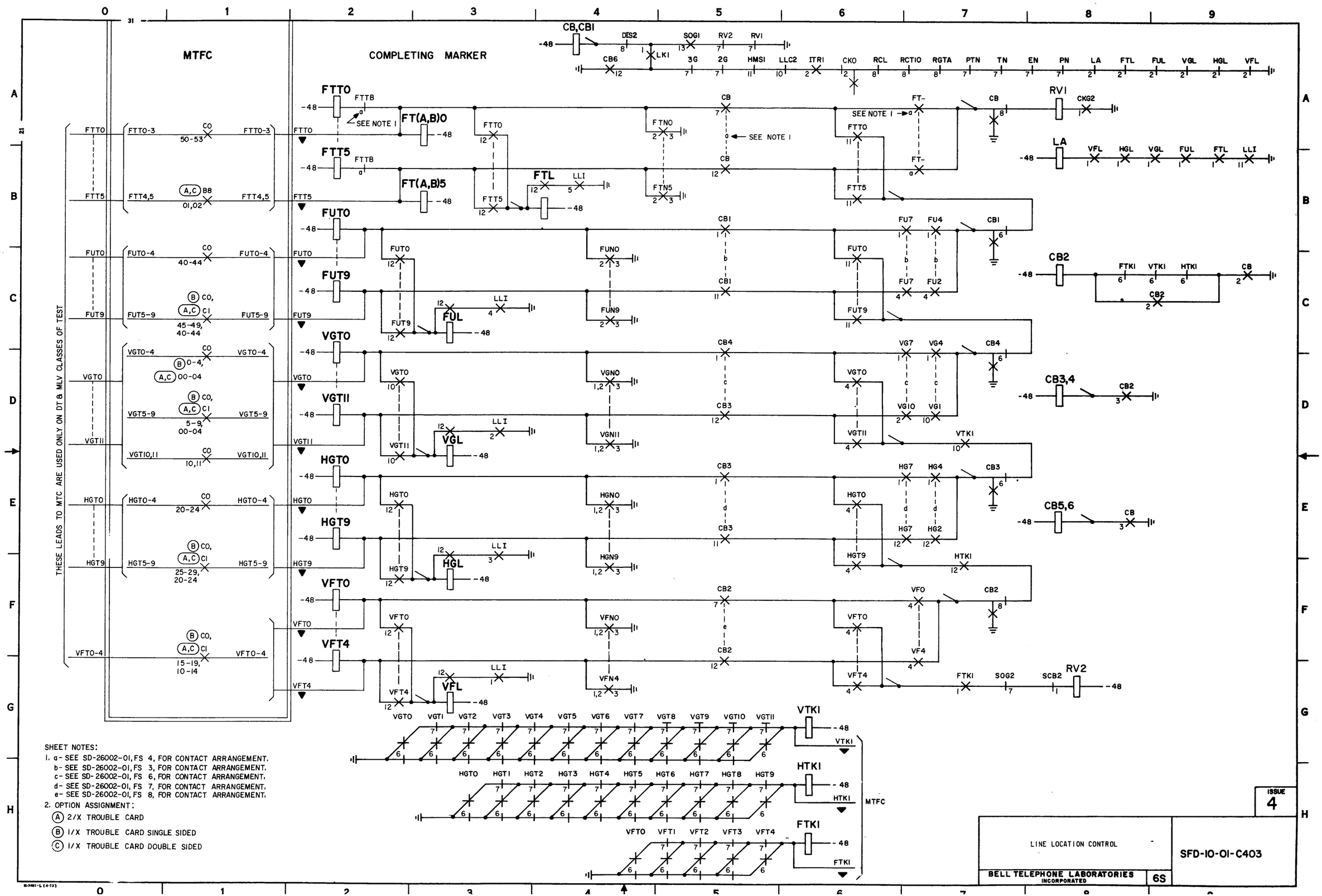

SHEET NOTES:

1. a- SEE SD-26002-01, FS 4, FOR CONTACT ARRANGEMENT.
   b- SEE SD-26002-01, FS 3, FOR CONTACT ARRANGEMENT.
   c- SEE SD-26002-01, FS 6, FOR CONTACT ARRANGEMENT.
   d- SEE SD-26002-01, FS 7, FOR CONTACT ARRANGEMENT.
   e- SEE SD-26002-01, FS 8, FOR CONTACT ARRANGEMENT.
2. OPTION ASSIGNMENT:
   (A) 2/X TROUBLE CARD
   (B) 1/X TROUBLE CARD SINGLE SIDED
   (C) 1/X TROUBLE CARD DOUBLE SIDED

ISSUE 4

LINE LOCATION CONTROL

BELL TELEPHONE LABORATORIES INCORPORATED 6S

SFD-10-01-C403

SFD-10-01-C403

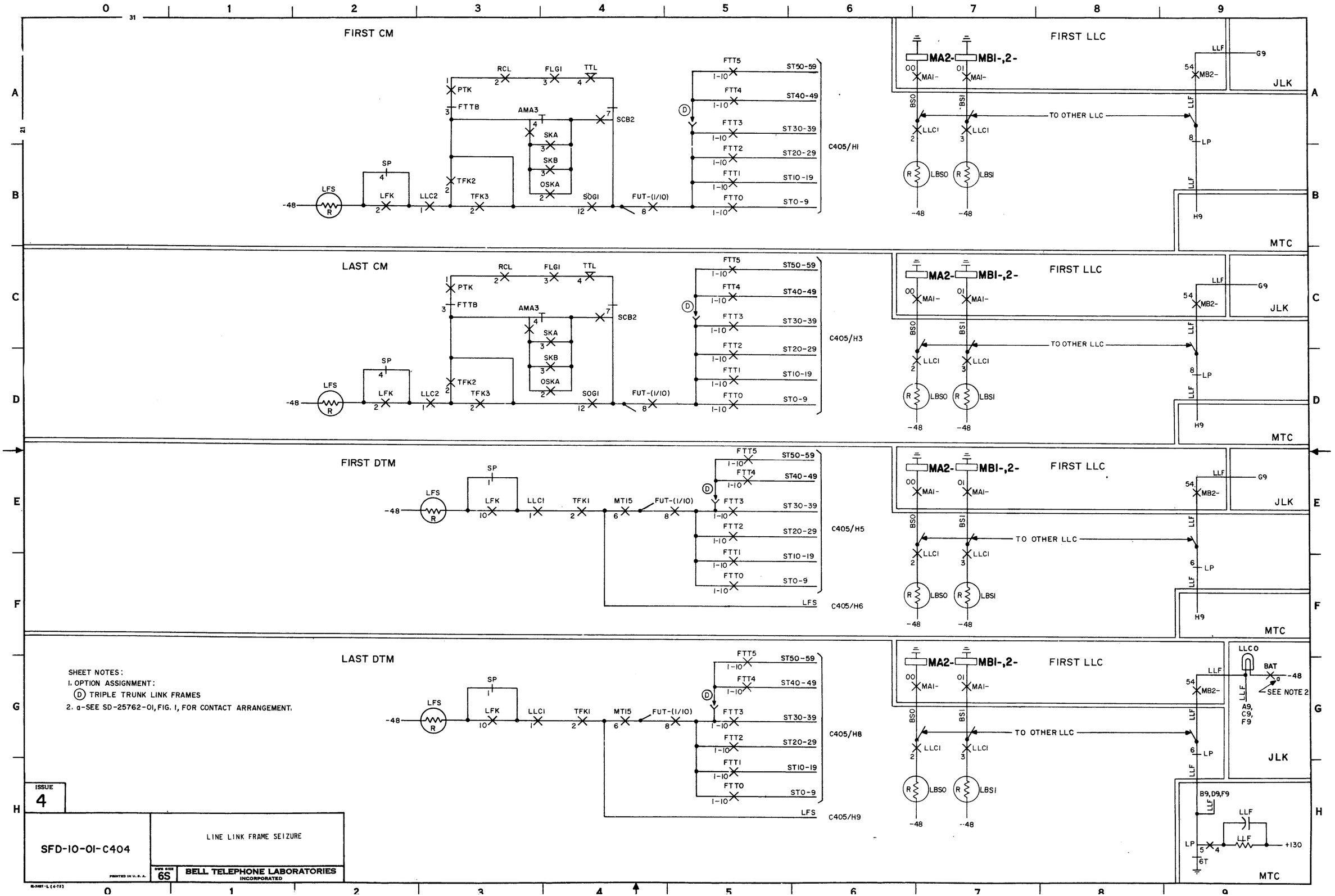

SFD-10-01-C404

SHEET NOTES:

1. THIS DRAWING SHOWS ALL COMPLETING MARKERS FIRST AND ALL DIAL TONE MARKERS LAST. ACTUALLY, THE MARKERS MAY APPEAR IN ANY ORDER IN THE PREFERENCE CHAIN.
2. OPTION ASSIGNMENTS:
   - (F) NON-PAIRED LINE LINK OPERATION.
   - (G) PAIRED LINE LINK OPERATION.
3. a-SEE SD-95417-01,FS 4, FOR CONTACT ARRANGEMENT.
   b-SEE SD-26039-01,FS 2-4, FOR CONTACT ARRANGEMENT.

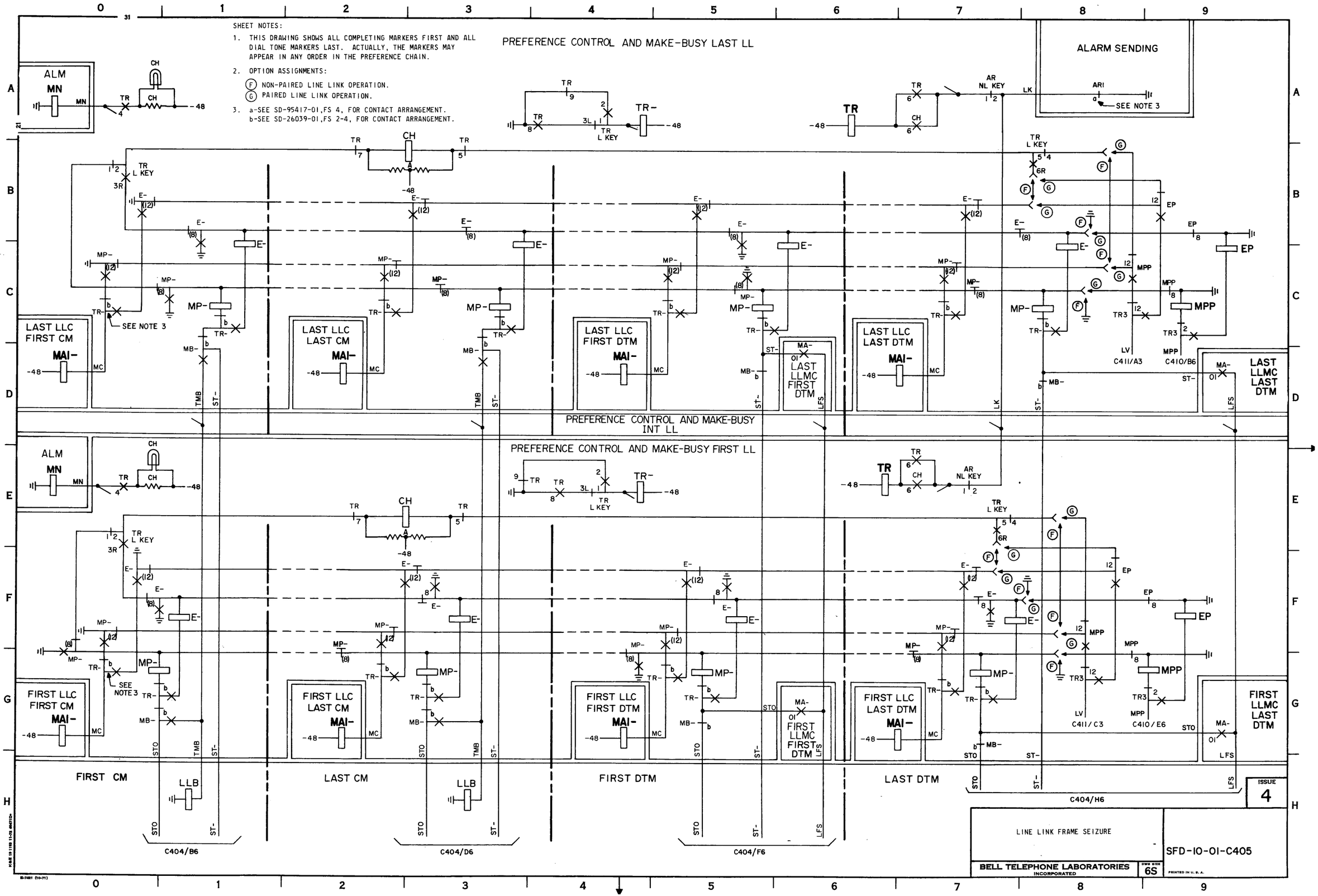

LINE LINK FRAME SEIZURE

BELL TELEPHONE LABORATORIES INCORPORATED

DWG SIZE 6S

SFD-10-01-C405

ISSUE 4

PRINTED IN U. S. A.

SFD-10-01-C405

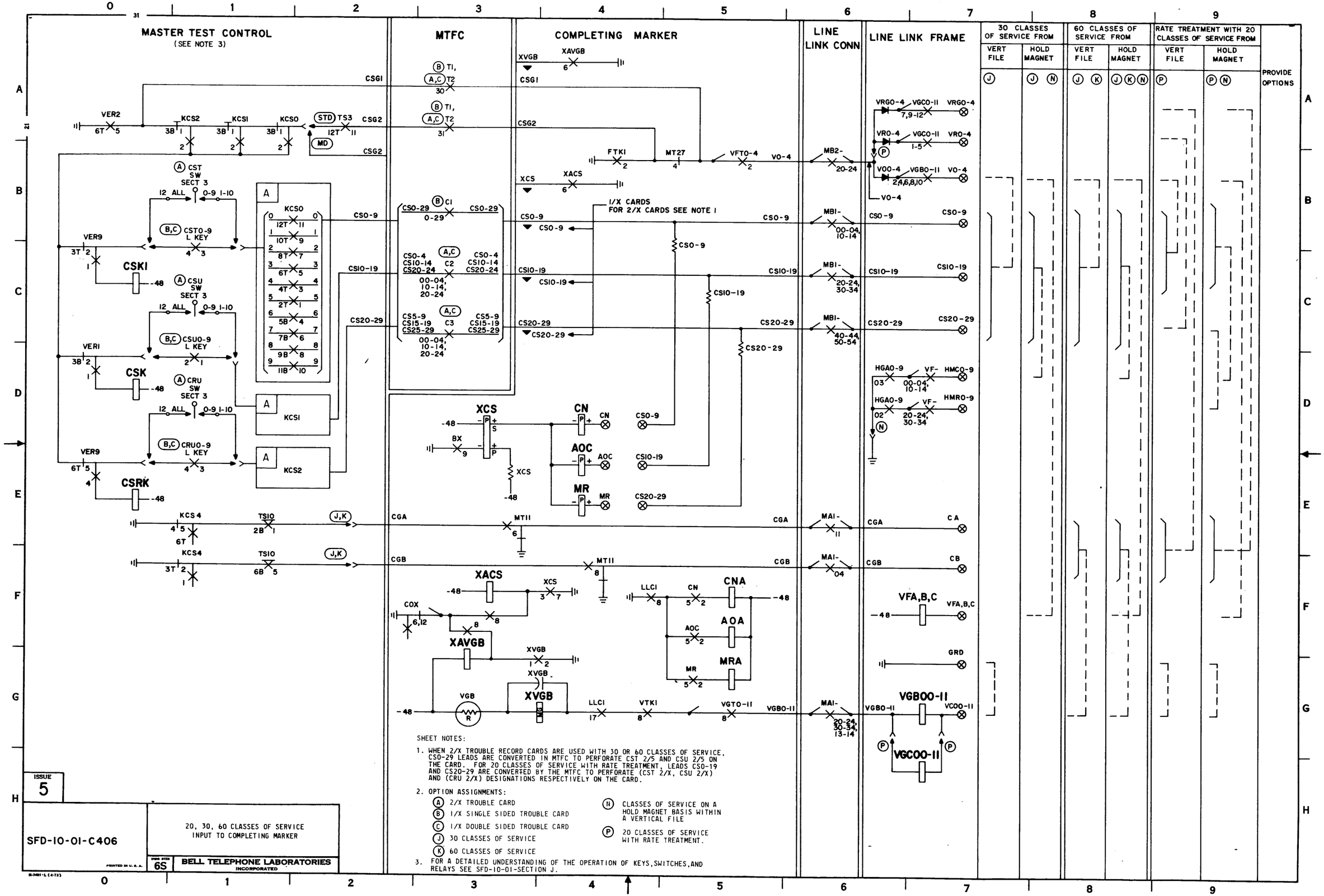
MASTER TEST CONTROL
(SEE NOTE 3)
MTFC
COMPLETING MARKER
LINE LINK CONN
LINE LINK FRAME
30 CLASSES OF SERVICE FROM
60 CLASSES OF SERVICE FROM
RATE TREATMENT WITH 20 CLASSES OF SERVICE FROM
VERT FILE
HOLD MAGNET
PROVIDE OPTIONS
CSGI
CSG2
CSO-9
CSIO-19
CS20-29
CGA
CGB
CSKI
CSK
CSRK
KCSO
KCSI
KCS2
XCS
XACS
XAVGB
XVGB
VGB
CN
AOC
MR
CNA
AOA
MRA
VFA,B,C
GRD
VGBOO-II
VGCOO-II
CA
CB
I/X CARDS
FOR 2/X CARDS SEE NOTE I
SHEET NOTES:
1. WHEN 2/X TROUBLE RECORD CARDS ARE USED WITH 30 OR 60 CLASSES OF SERVICE, CSO-29 LEADS ARE CONVERTED IN MTFC TO PERFORATE CST 2/5 AND CSU 2/5 ON THE CARD. FOR 20 CLASSES OF SERVICE WITH RATE TREATMENT, LEADS CSO-19 AND CS20-29 ARE CONVERTED BY THE MTFC TO PERFORATE (CST 2/X, CSU 2/X) AND (CRU 2/X) DESIGNATIONS RESPECTIVELY ON THE CARD.
2. OPTION ASSIGNMENTS:
(A) 2/X TROUBLE CARD
(B) I/X SINGLE SIDED TROUBLE CARD
(C) I/X DOUBLE SIDED TROUBLE CARD
(J) 30 CLASSES OF SERVICE
(K) 60 CLASSES OF SERVICE
(N) CLASSES OF SERVICE ON A HOLD MAGNET BASIS WITHIN A VERTICAL FILE
(P) 20 CLASSES OF SERVICE WITH RATE TREATMENT.
3. FOR A DETAILED UNDERSTANDING OF THE OPERATION OF KEYS, SWITCHES, AND RELAYS SEE SFD-10-01-SECTION J.
ISSUE 5
SFD-10-01-C406
20, 30, 60 CLASSES OF SERVICE INPUT TO COMPLETING MARKER
BELL TELEPHONE LABORATORIES INCORPORATED
6S
SFD-10-01-C406

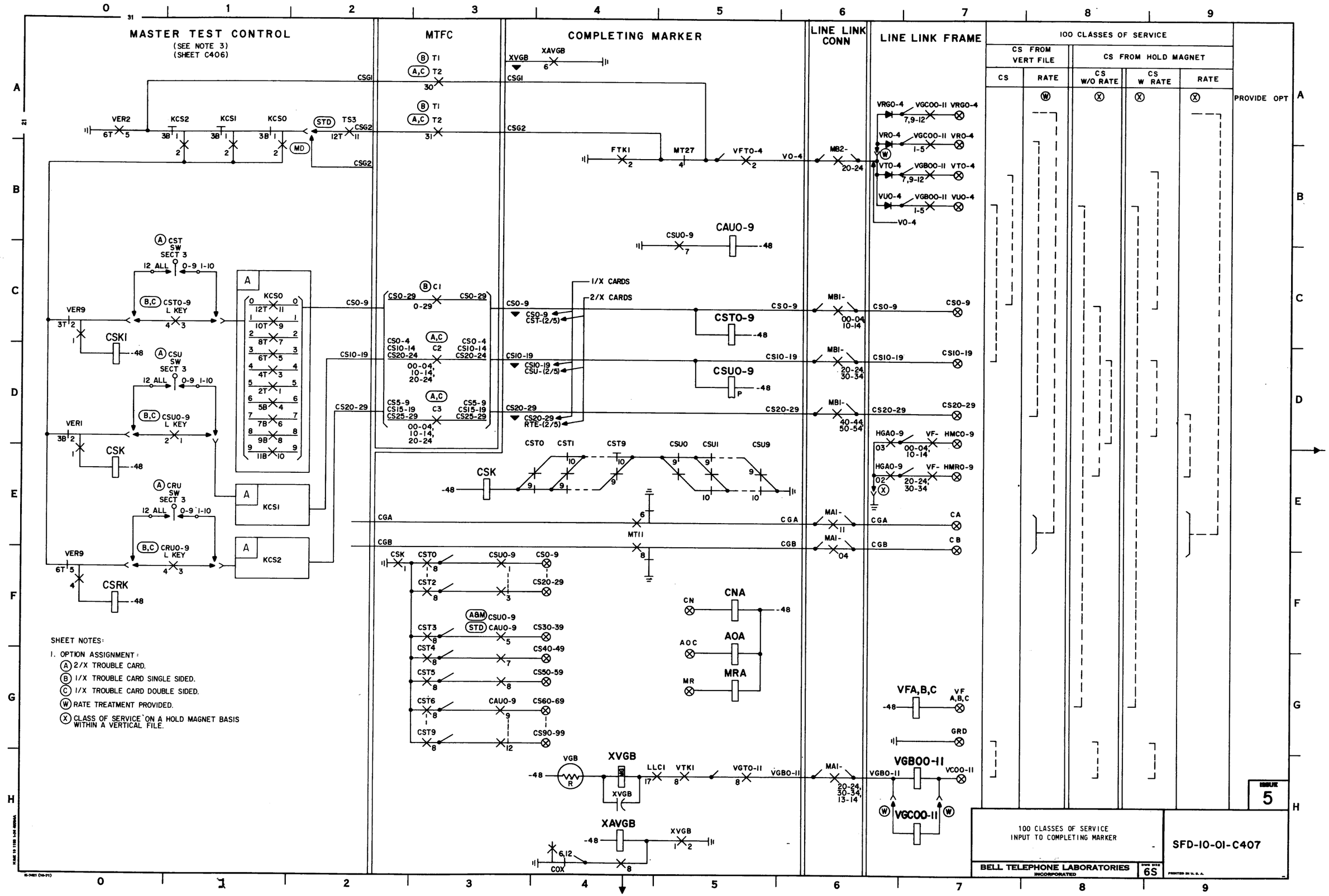

SFD-10-01-C407

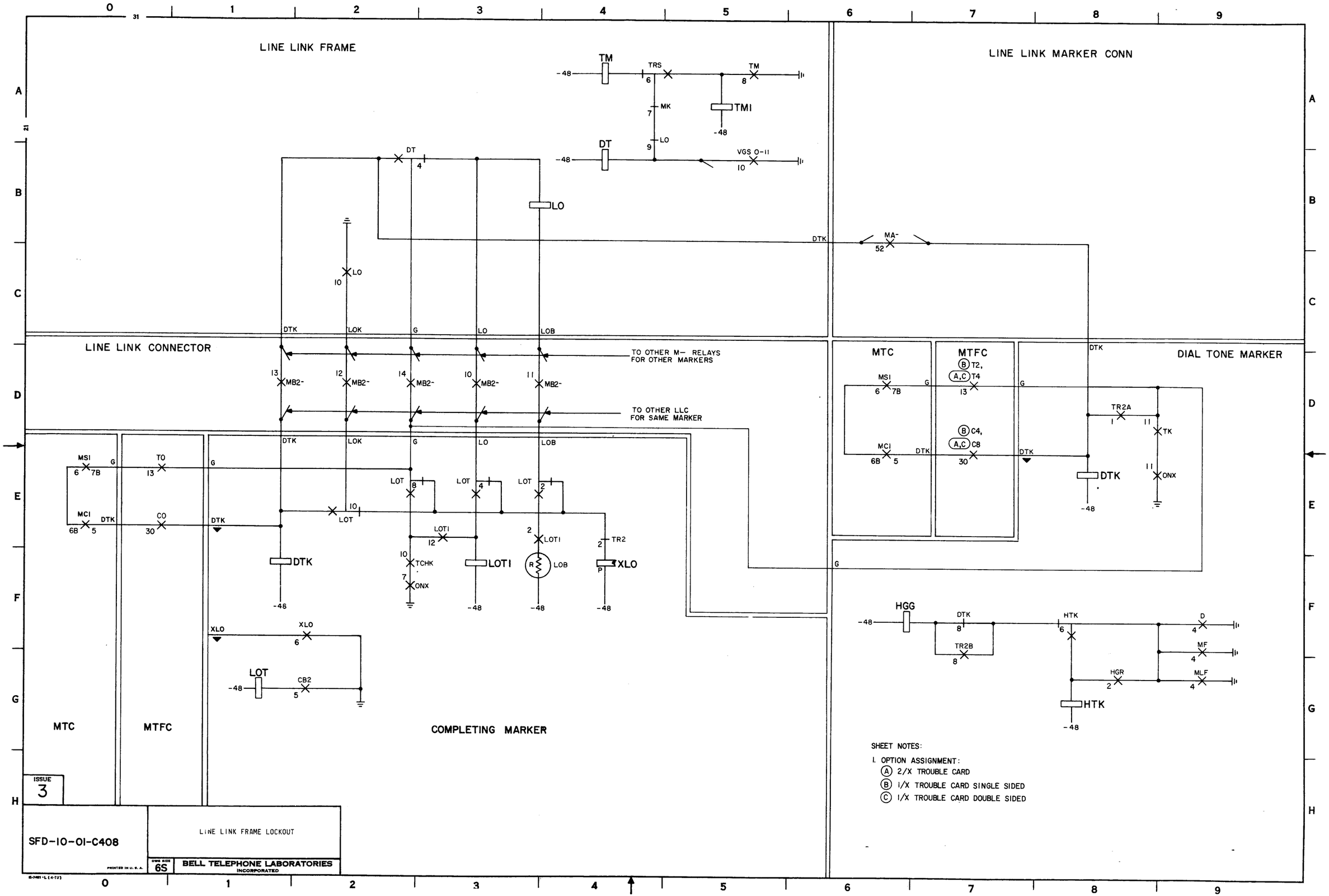

SFD-10-01-C408

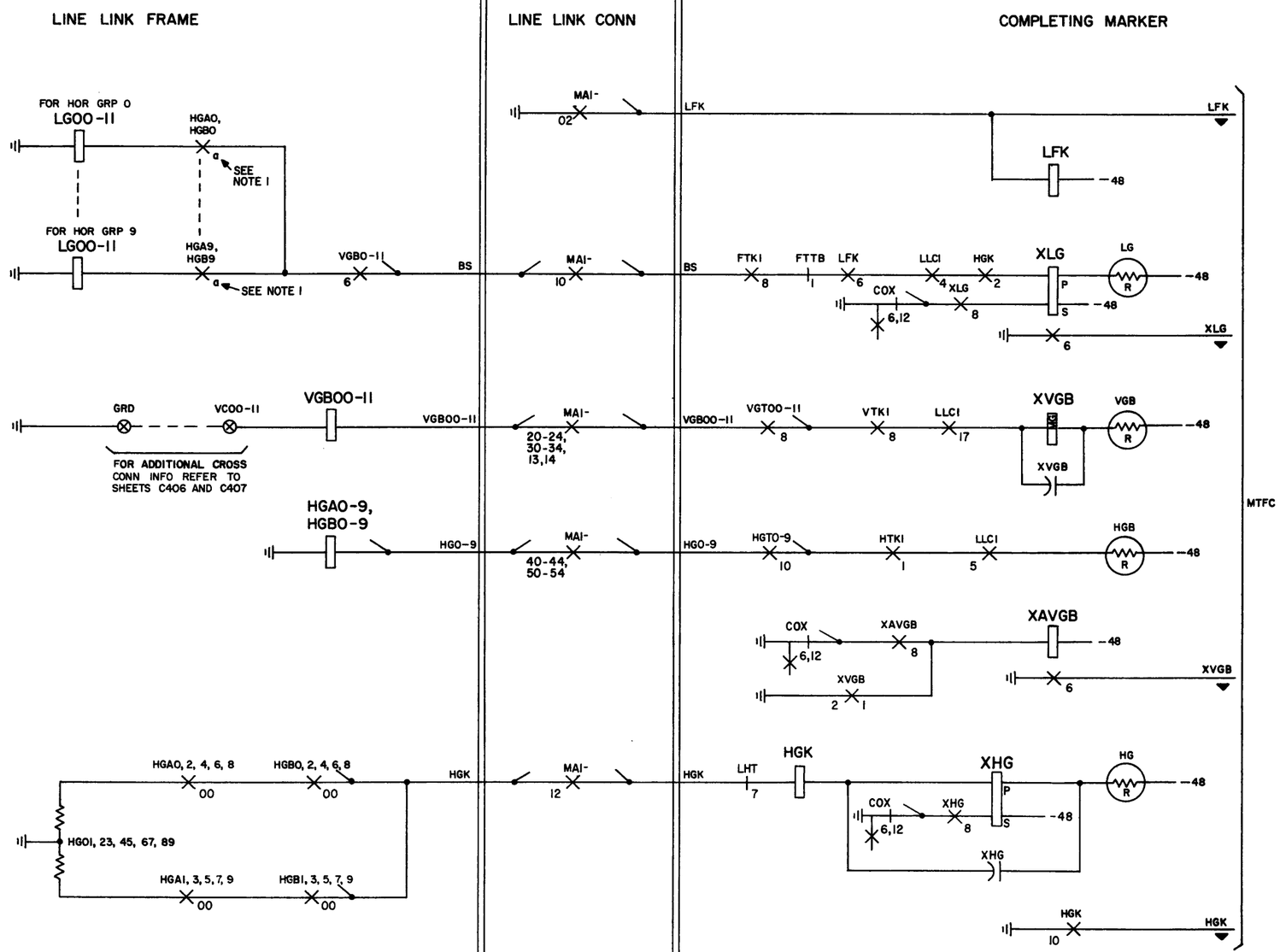

SHEET NOTES:

1. a-SEE SD-26030-01, FS 2, FOR CONTACT ARRANGEMENT.

ISSUE 4

LINE LINK FRAME CONTROLS
NON PAIRED OPERATION

BELL TELEPHONE LABORATORIES INCORPORATED

SHEET CODE 6S

SFD-10-01-C409

PRINTED IN U.S.A.

SFD-10-01-C409

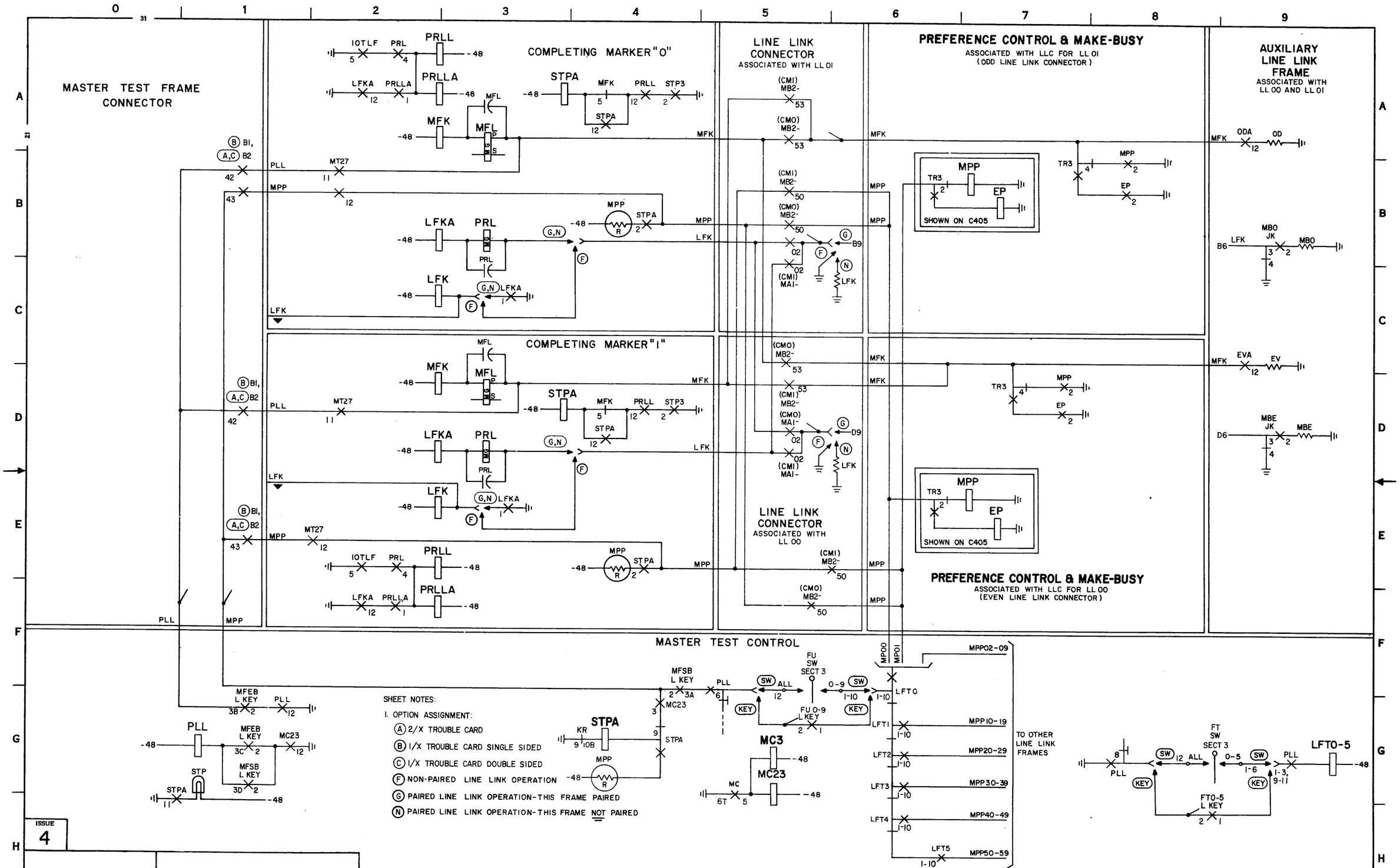

SFD-10-01-C410

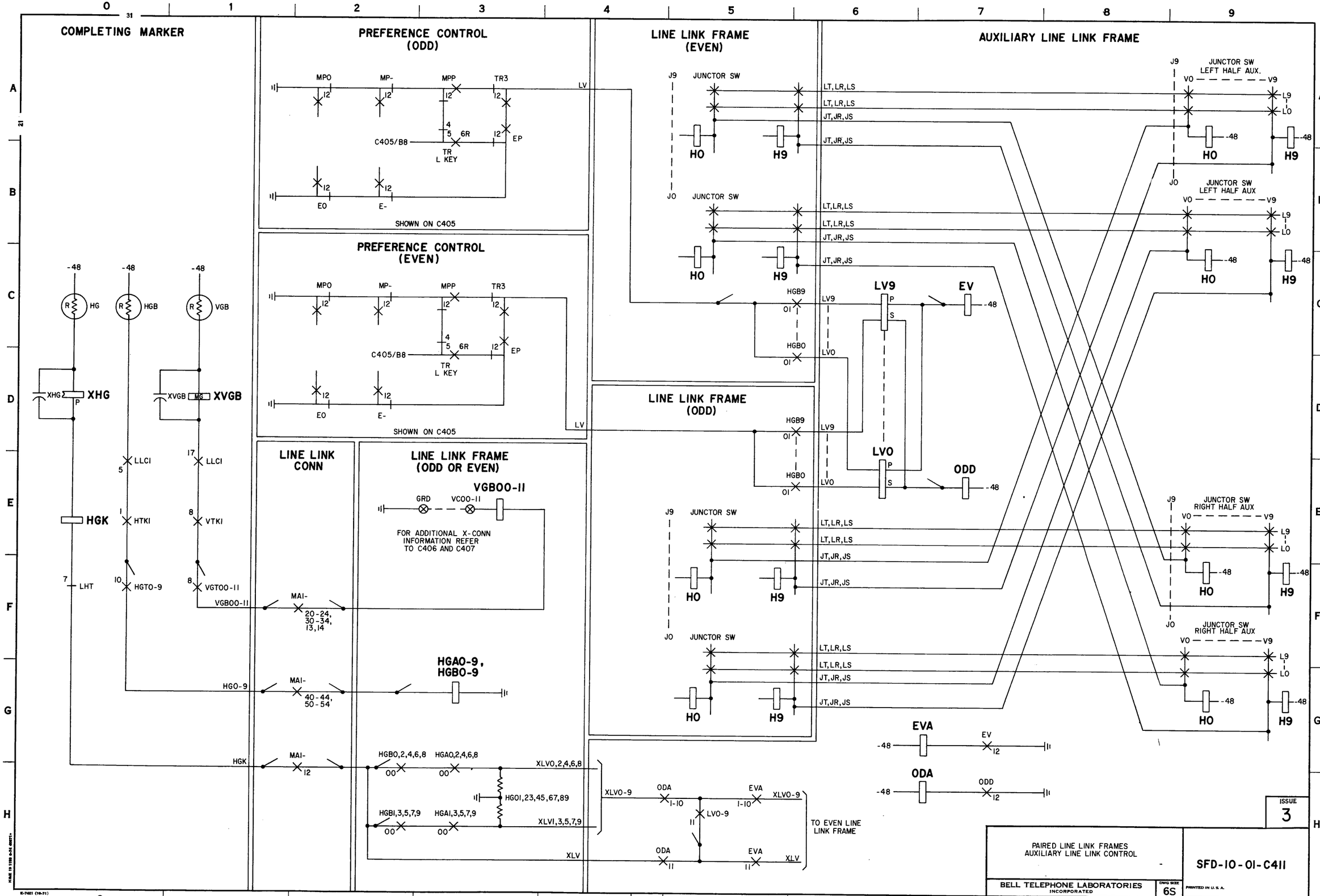

SFD-10-01-C411

ESTABLISHING OUTGOING TRUNK CONNECTION

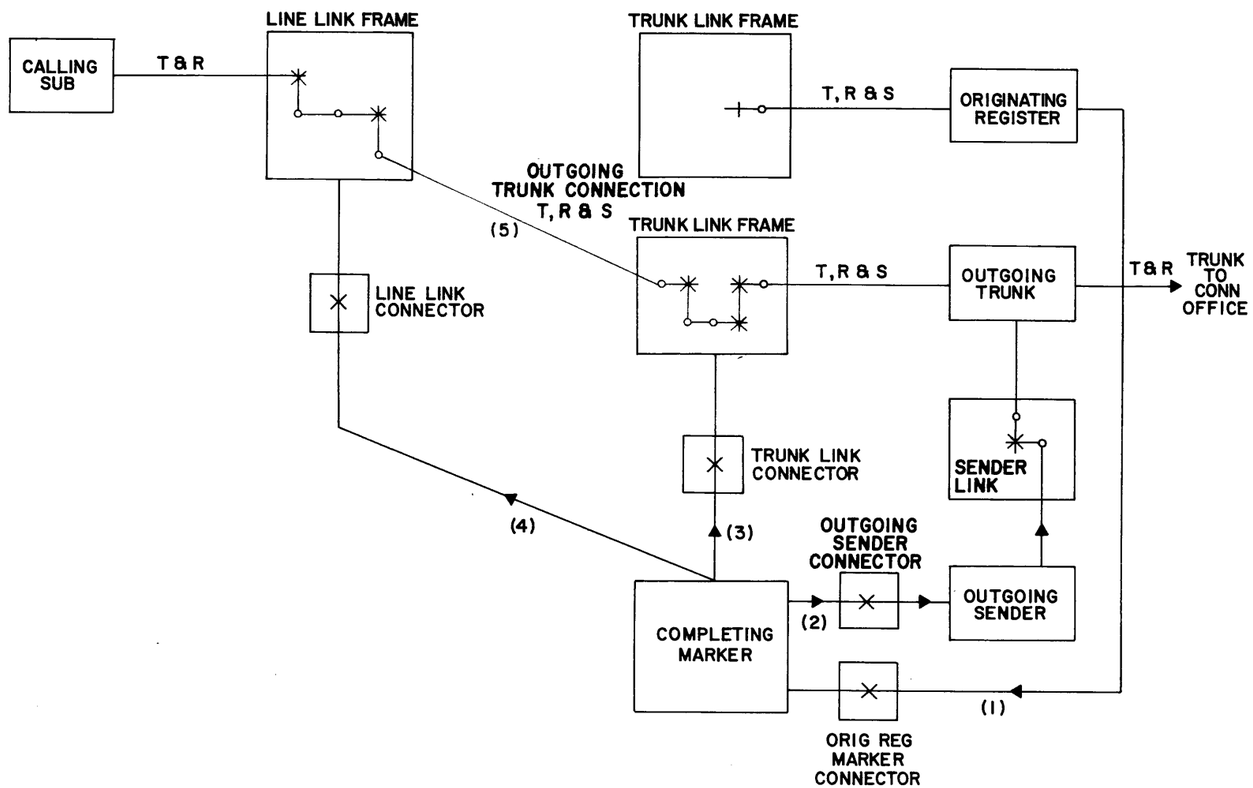

CAUTION!

DUE TO THE SIMPLIFIED NATURE OF THIS DOCUMENT, INFORMATION SHOWN MAY NOT BE COMPLETE.

INDEX

ISSUE 4

PART C5
NETWORK CONNECTION

SFD-10-01-C501

BELL TELEPHONE LABORATORIES INCORPORATED

SIZE 6S

PRINTED IN U.S.A.

SFD-10-01-C501
2 SHEETS, SH 1

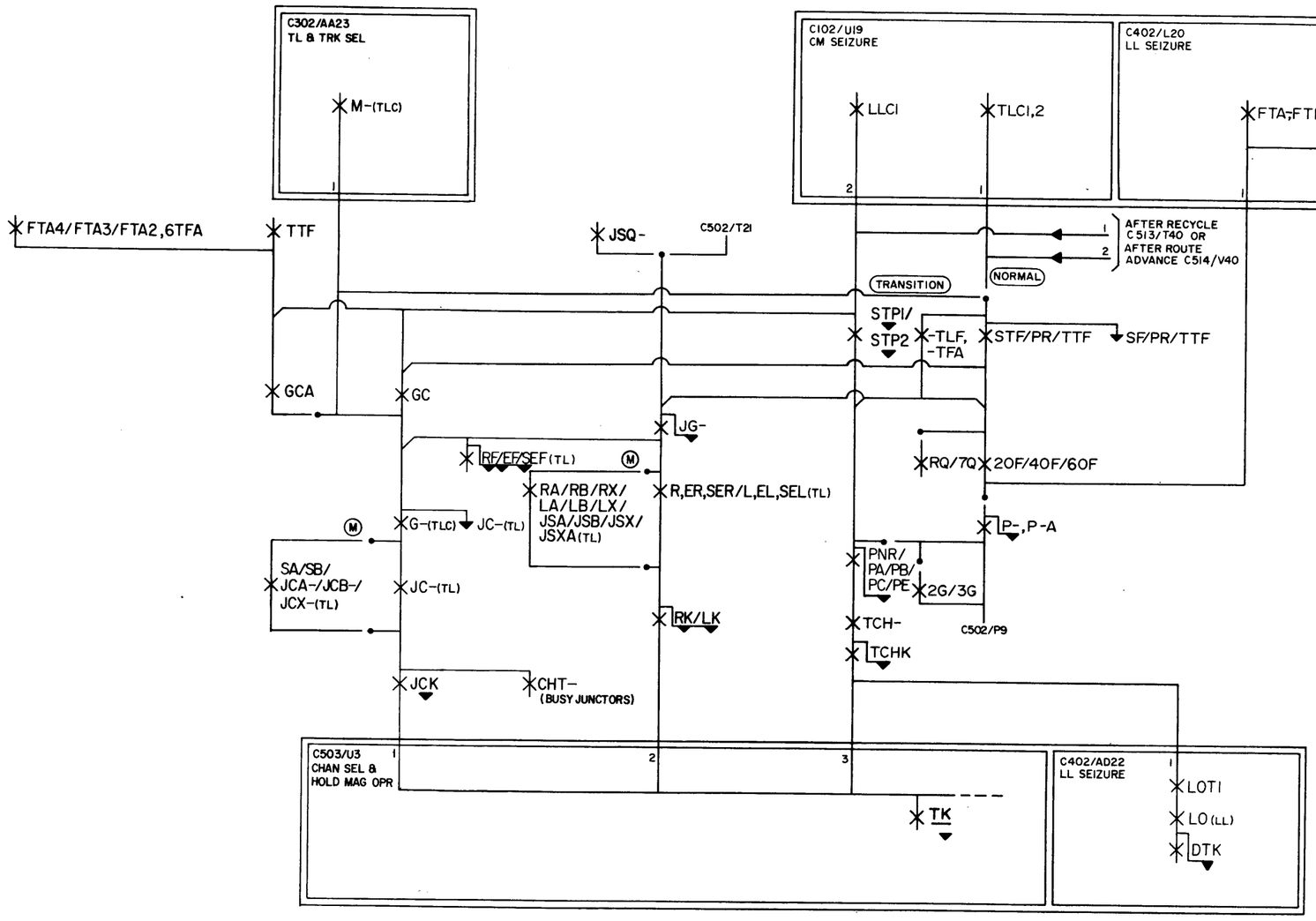

ISSUE 5

SFD-10-01-C502

SEQUENCE CHART
PREPARATION FOR CHANNEL TEST

6S BELL TELEPHONE LABORATORIES INCORPORATED

SHEET NOTES:

1. OPTION ASSIGNMENT:
   (M) TRUNK LINK FRAME (SD-27879-01)

SFD-10-01-C502

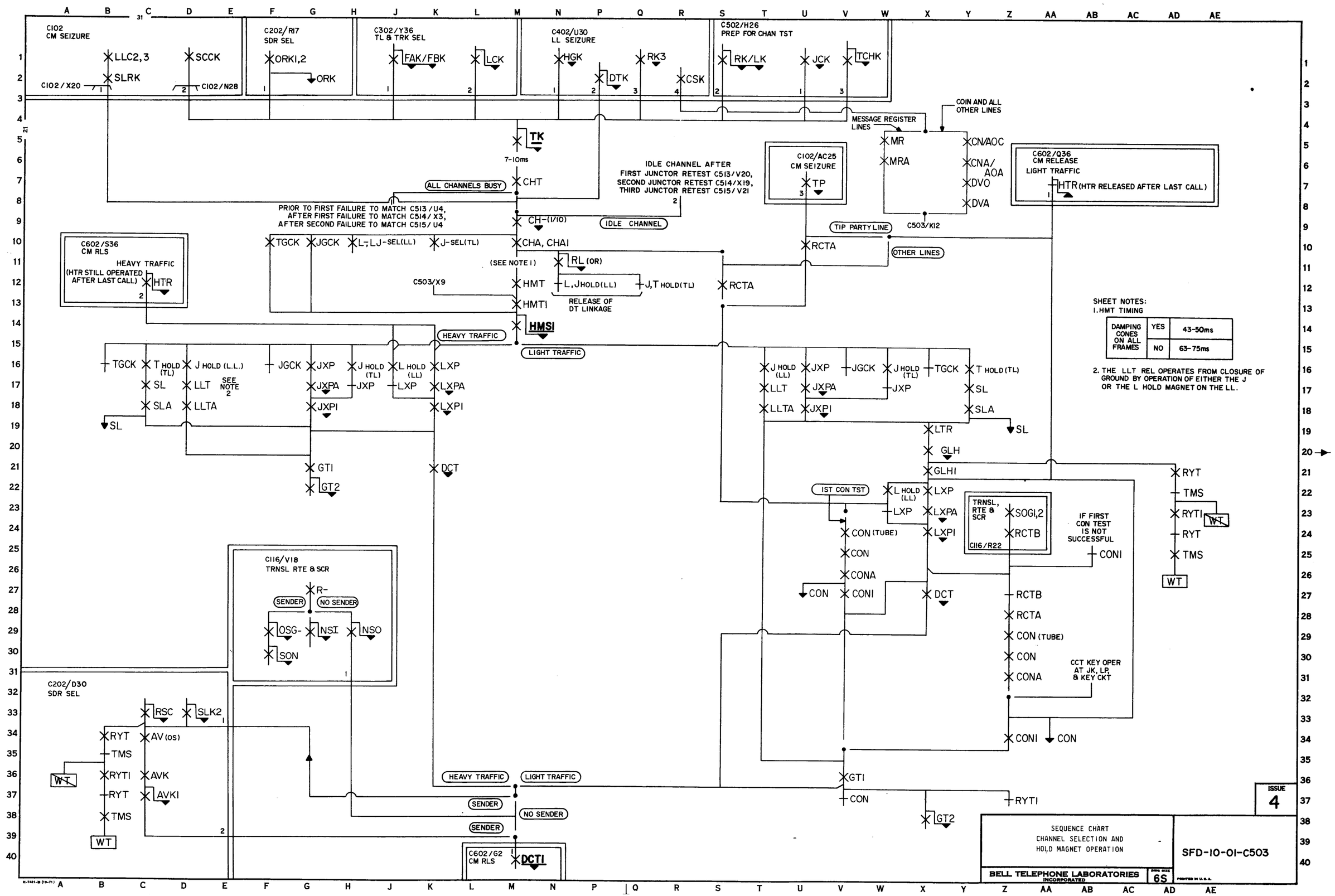

SFD-10-01-C503

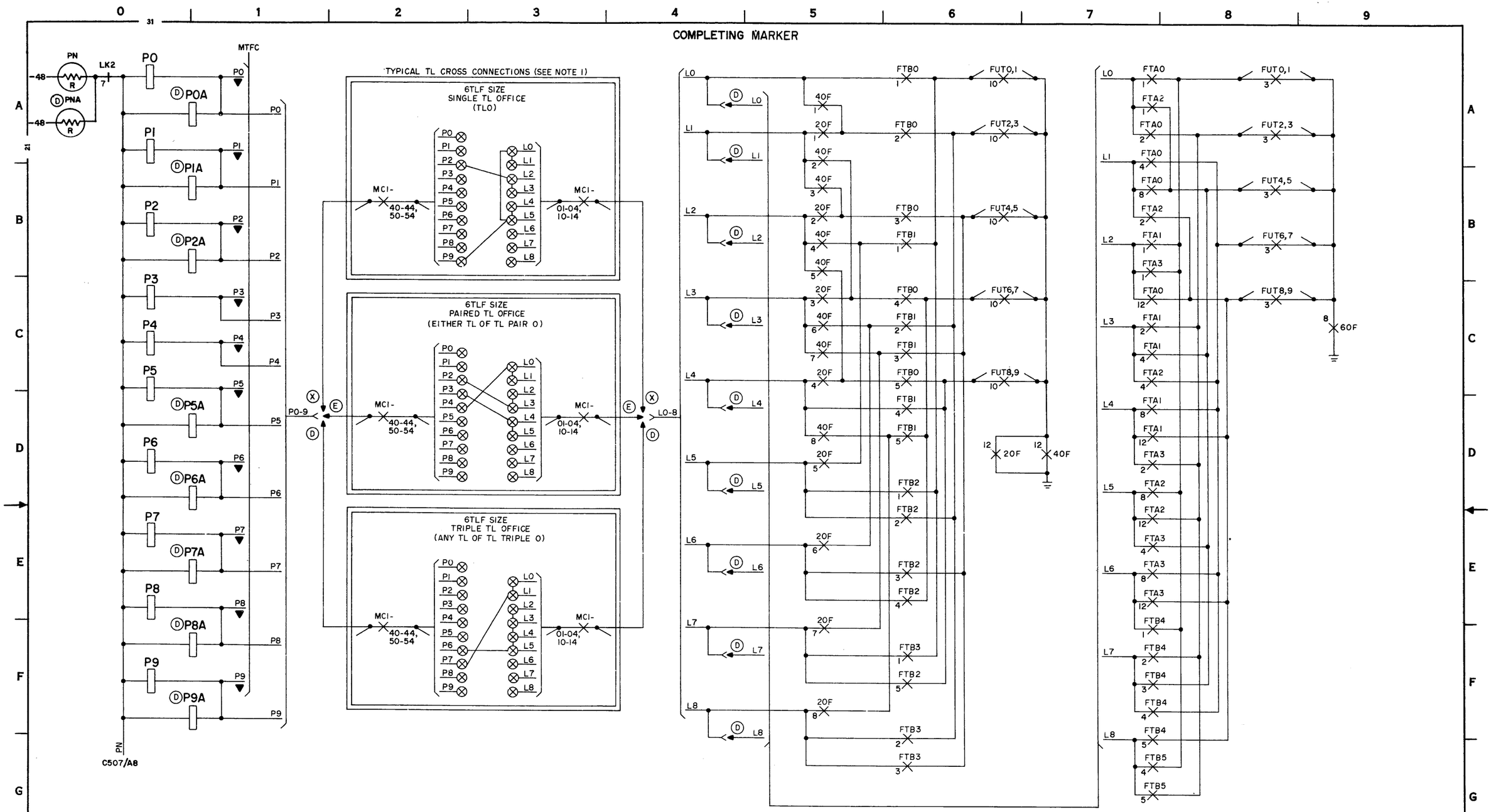

SHEET NOTES:

1. TYPICAL TL CROSS CONNECTIONS ARE SHOWN FOR 6TLF SIZE OFFICES WITH SINGLE, PAIRED OR TRIPLE TL. REFER TO BSP 819-220-150 FOR TL CROSS CONNECTIONS FOR ANY SIZE OFFICE.

2. OPTION ASSIGNMENT:
   - (D) TRIPLE TL OFFICE
   - (E) PAIRED TL OFFICE
   - (X) SINGLE TL OFFICE

ISSUE 3

SFD-10-01-C504

JUNCTOR PATTERN UNITS CONTROL

DWG SIZE 6S

BELL TELEPHONE LABORATORIES INCORPORATED

PRINTED IN U. S. A.

SFD-10-01-C504

COMPLETING MARKER

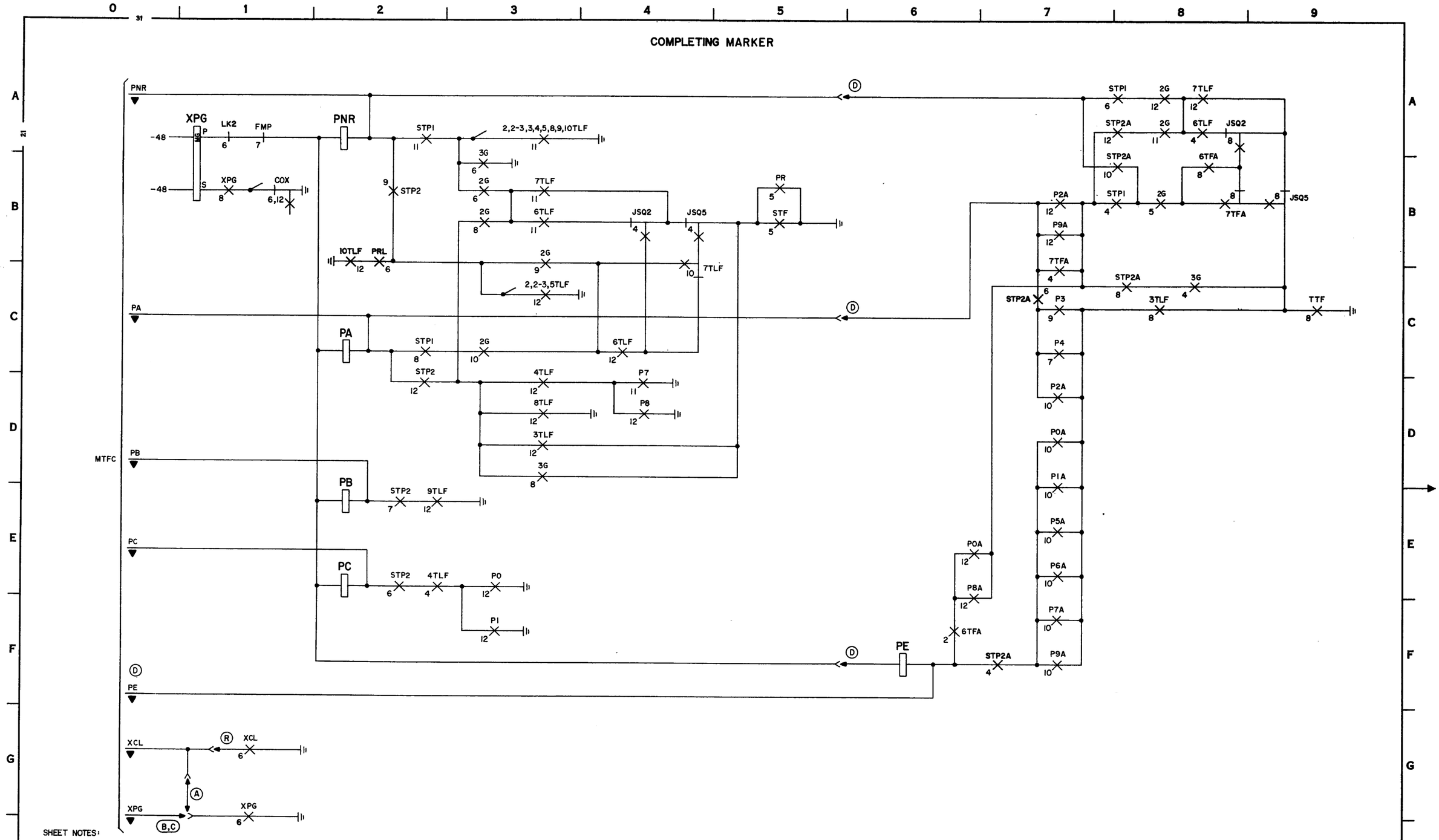

SHEET NOTES:

1. OPTION ASSIGNMENT:
   - (A) 2/X TROUBLE CARD
   - (B,C) 1/X TROUBLE CARDS
   - (D) TRIPLE TRUNK LINK FRAMES
   - (R) 3 TO 6 GROUPS OF ORIGINATING REGISTERS

FIGURE 3

JUNCTOR PATTERN TENS CONTROL

SFD-10-01-C505

BELL TELEPHONE LABORATORIES INCORPORATED

DWG SIZE 6S

PRINTED IN U.S.A.

SFD-10-01-C505

COMPLETING MARKER JUNCTOR SEQUENCE CONTROL (TEST CALL)

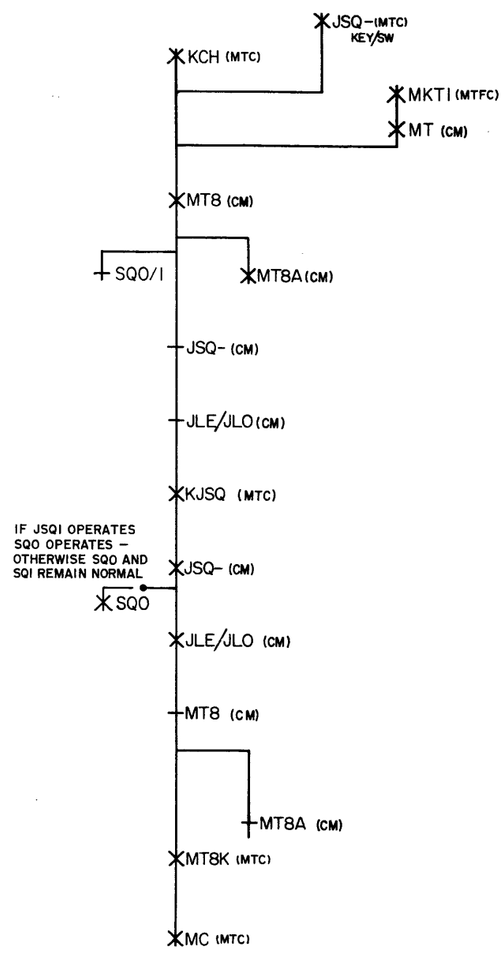

COMPLETING MARKER JUNCTOR SEQUENCE CONTROL

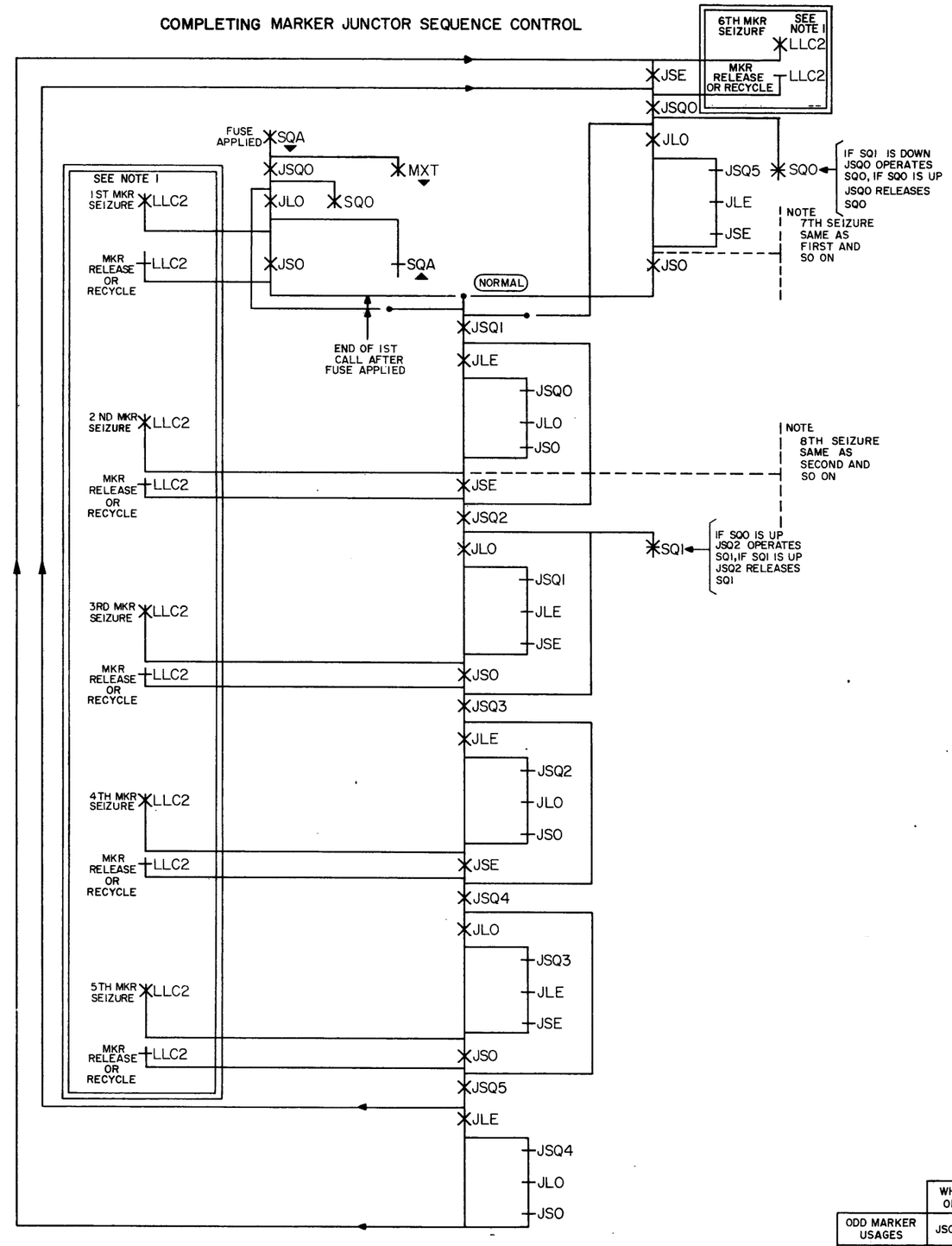

SHEET NOTE:

1. LLC2 IS OPERATED AT THE BEGINNING OF EACH MARKER SEIZURE (C102/T8) OR AFTER RECYCLE (C513/Q41).
   LLC2 IS RELEASED UPON MARKER RELEASE (C603/P22) OR UPON START OF MARKER RECYCLE (C513/C36).

	WHEN LLC2 OPERATES	WHEN LLC2 RELEASES
ODD MARKER USAGES	JSO OPERATES	JSQ1,3 OR 5 & JLE OPERATES
EVEN MARKER USAGES	JSE OPERATES	JSQ0,2 OR 4 & JLO OPERATES

ISSUE 3

SFD-10-01-C506

SEQUENCE CHART JUNCTOR SEQUENCE CONTROL

DWG SIZE 6S

BELL TELEPHONE LABORATORIES INCORPORATED

SFD-10-01-C506

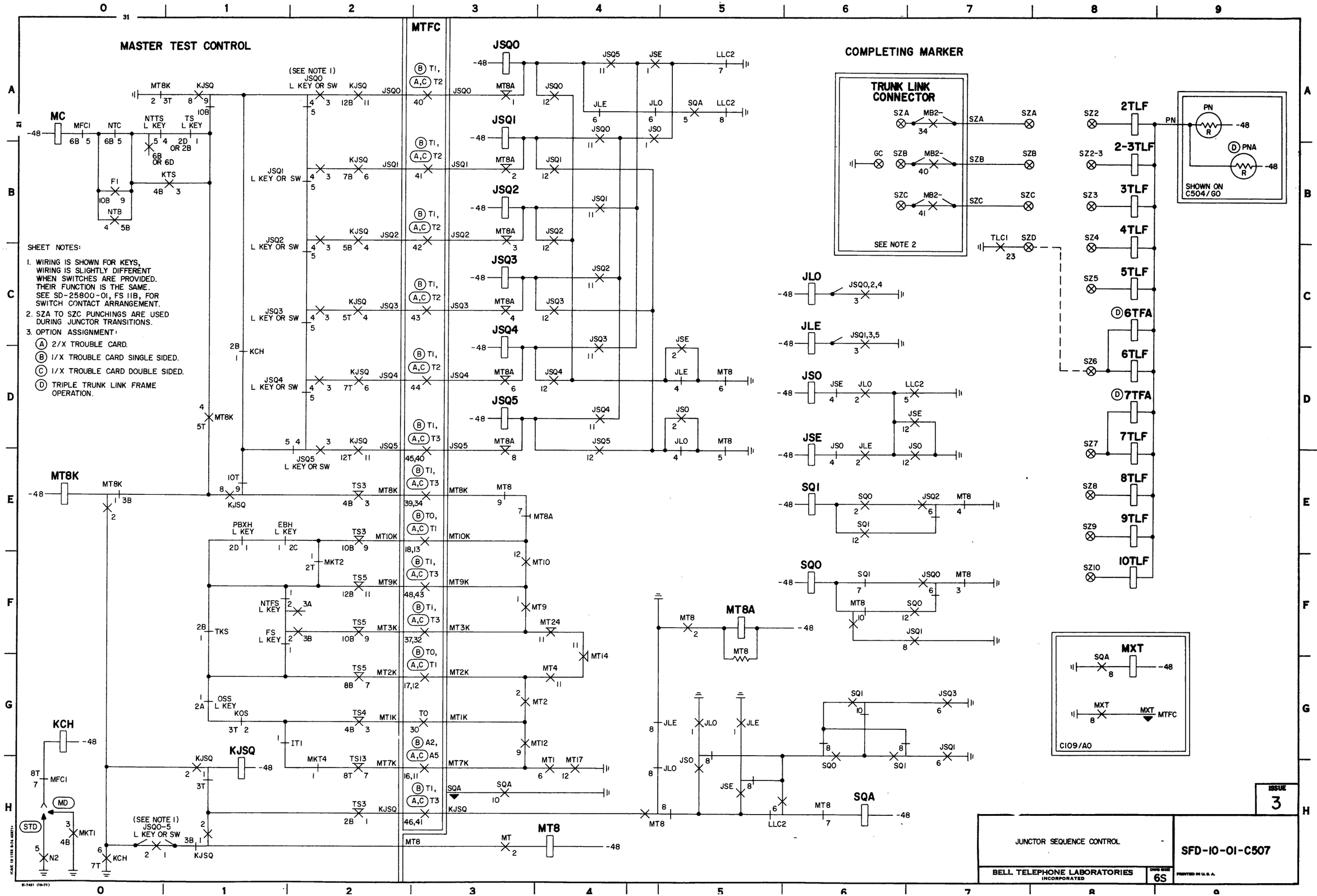

SFD-10-01-C507

COMPLETING MARKER

JUNCTOR SUBGROUP SELECTION
FOR 2,2-3,5 AND 10 TLF SIZES
(SEE NOTE 1)

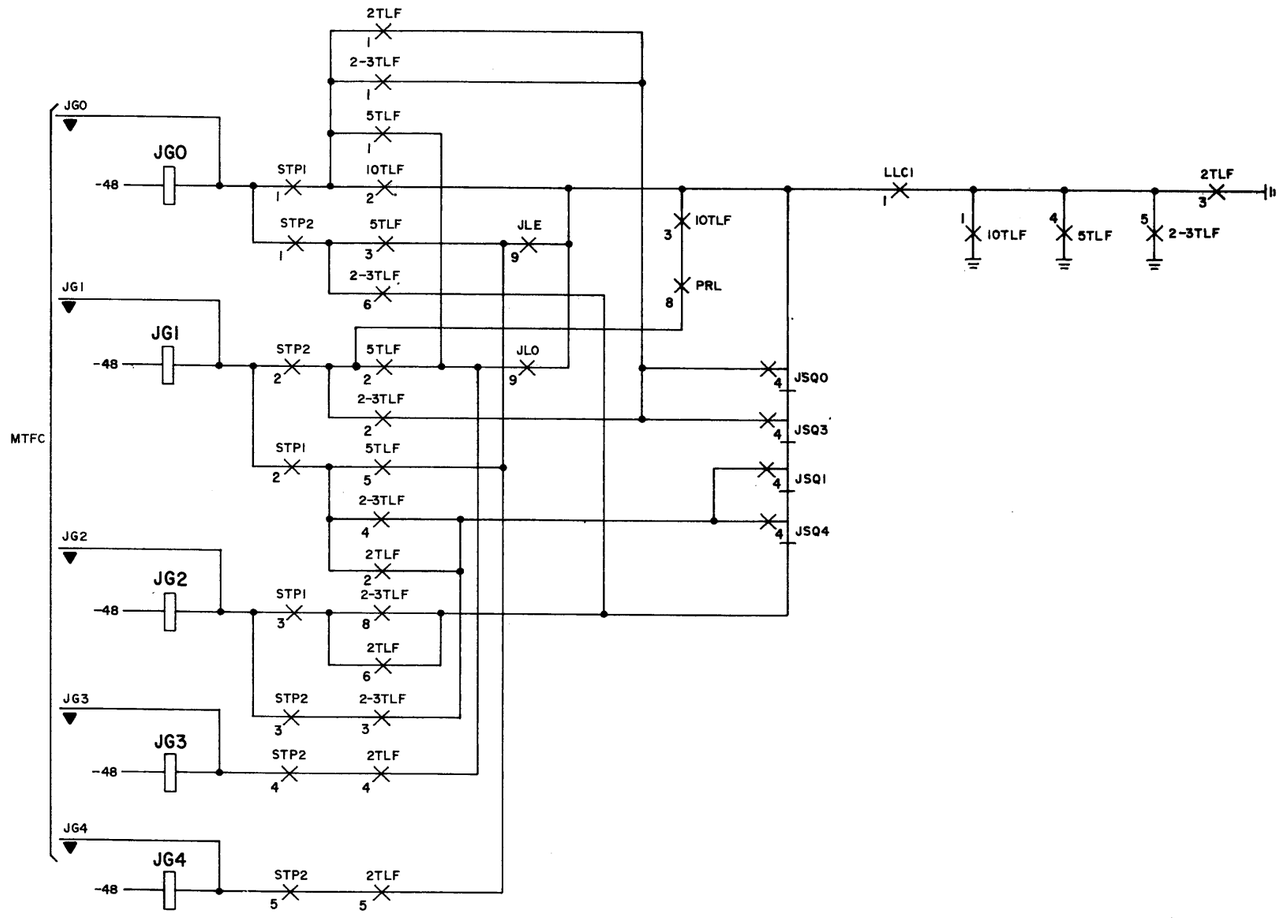

SHEET NOTES:

1. THIS IS A SIMPLIFIED DRAWING SHOWING PATHS USED FOR JUNCTOR SUBGROUP SELECTION IN 2,2-3,5 AND 10 TLF SIZES. ALL JUNCTOR SUBGROUPS FOR THESE SIZES HAVE 10 JUNCTORS.

ISSUE 3

SFD-10-01-C508

JUNCTOR SUBGROUP SELECTION
FOR 2,2-3,5 AND 10 TLF SIZES

DWG SIZE 6S

BELL TELEPHONE LABORATORIES
INCORPORATED

PRINTED IN U.S.A.

SFD-10-01-C508

COMPLETING MARKER

JUNCTOR SUBGROUP SELECTION
FOR 3,4,6,7,8,9 TLF SIZES
(SEE NOTE 1)

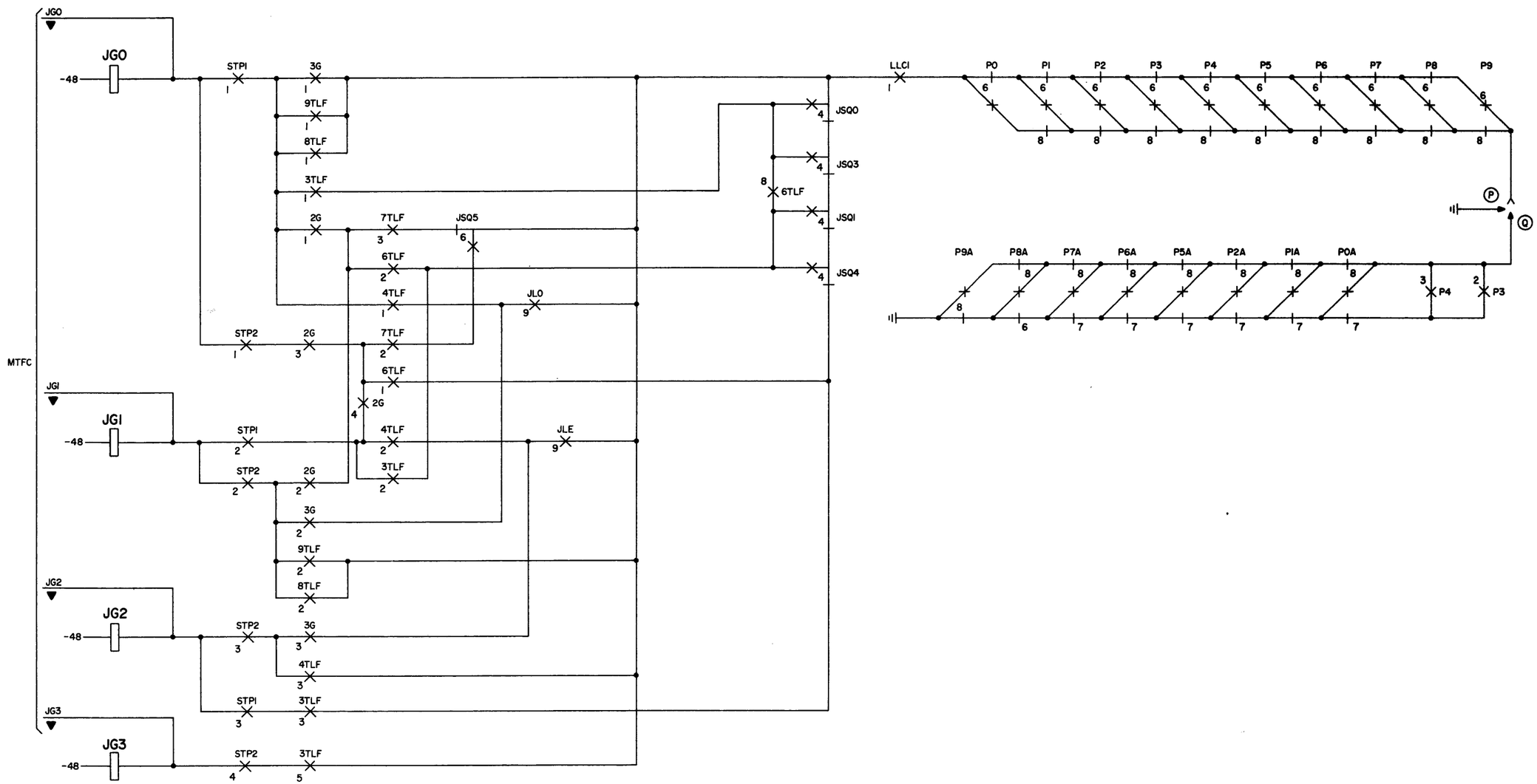

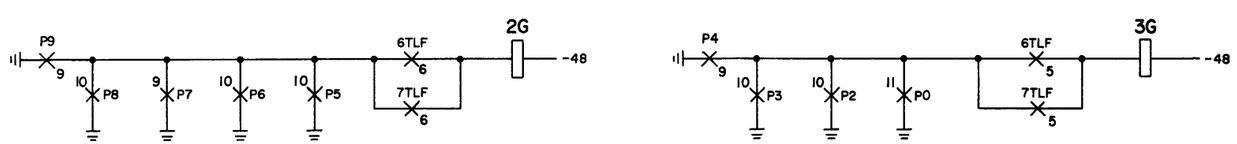

SHEET NOTES:

1. THIS IS A SIMPLIFIED DRAWING SHOWING PATHS USED FOR JUNCTOR SUBGROUP SELECTION IN 3,4,6,7,8, AND 9 TLF SIZES. EACH OF THESE SIZES HAVE ONE OR MORE JUNCTOR SUBGROUPS WITH LESS THAN 10 JUNCTORS.
2. OPTION ASSIGNMENT:

(P) 20 OR LESS TRUNK LINK FRAMES.

(Q) MORE THAN 20 TRUNK LINK FRAMES.

ISSUE 3

JUNCTOR SUBGROUP SELECTION
FOR 3,4,6,7,8,9 TLF SIZES

SFD-10-01-C509

BELL TELEPHONE LABORATORIES INCORPORATED

DWG SIZE 6S

PRINTED IN U.S.A.

SFD-10-01-C509

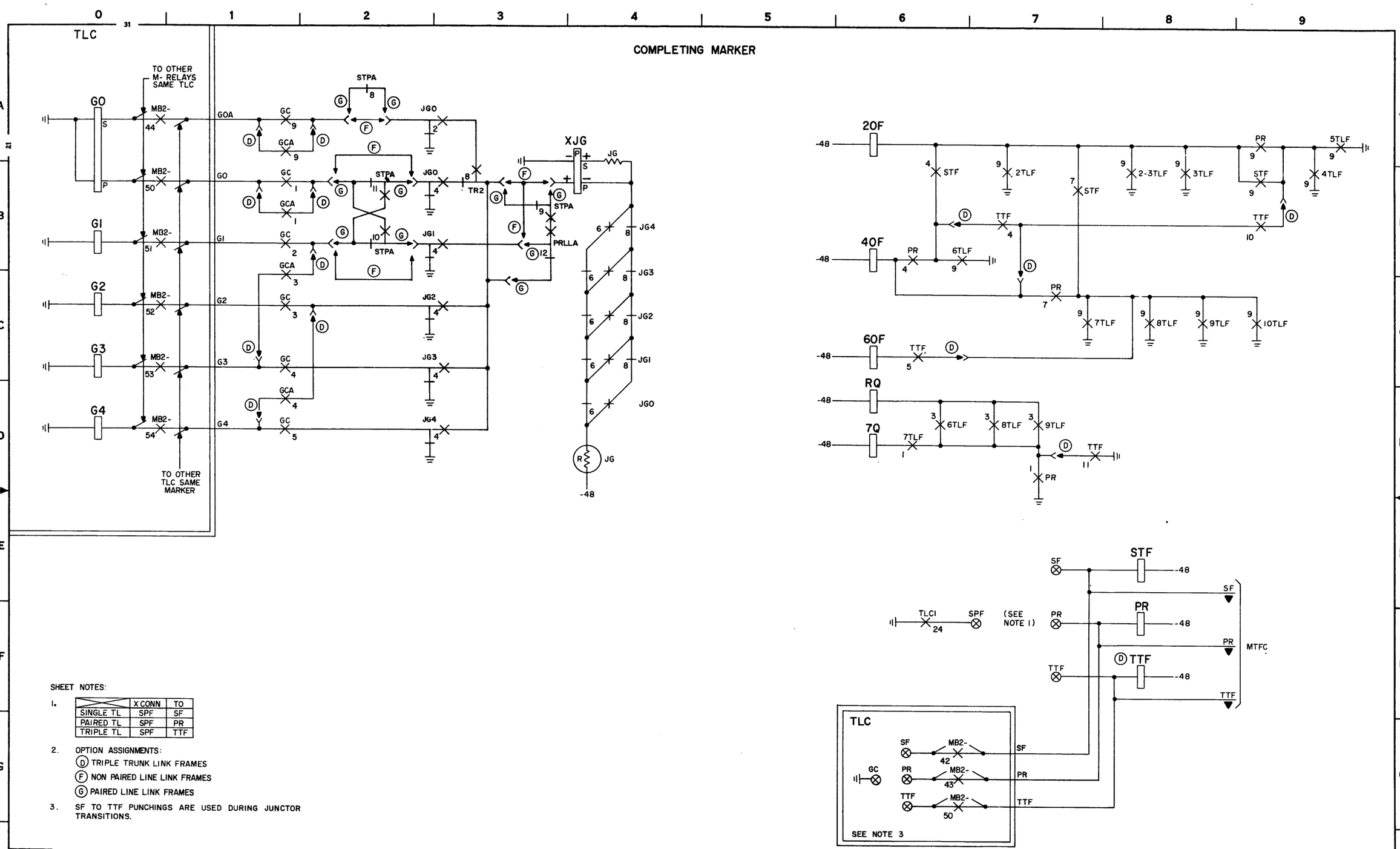

SHEET NOTES:

1.

	X CONN	TO
SINGLE TL	SPF	SF
PAIRED TL	SPF	PR
TRIPLE TL	SPF	TTF

2. OPTION ASSIGNMENTS:
   - (D) TRIPLE TRUNK LINK FRAMES
   - (F) NON PAIRED LINE LINK FRAMES
   - (G) PAIRED LINE LINK FRAMES
3. SF TO TTF PUNCHINGS ARE USED DURING JUNCTOR TRANSITIONS.

ISSUE 3

SFD-10-01-C510

JUNCTOR SUBGROUP CONNECTOR RELAYS

DWG SIZE 6S

BELL TELEPHONE LABORATORIES INCORPORATED

PRINTED IN U. S. A.

E-7481-L (4-72)

SFD-10-01-C510

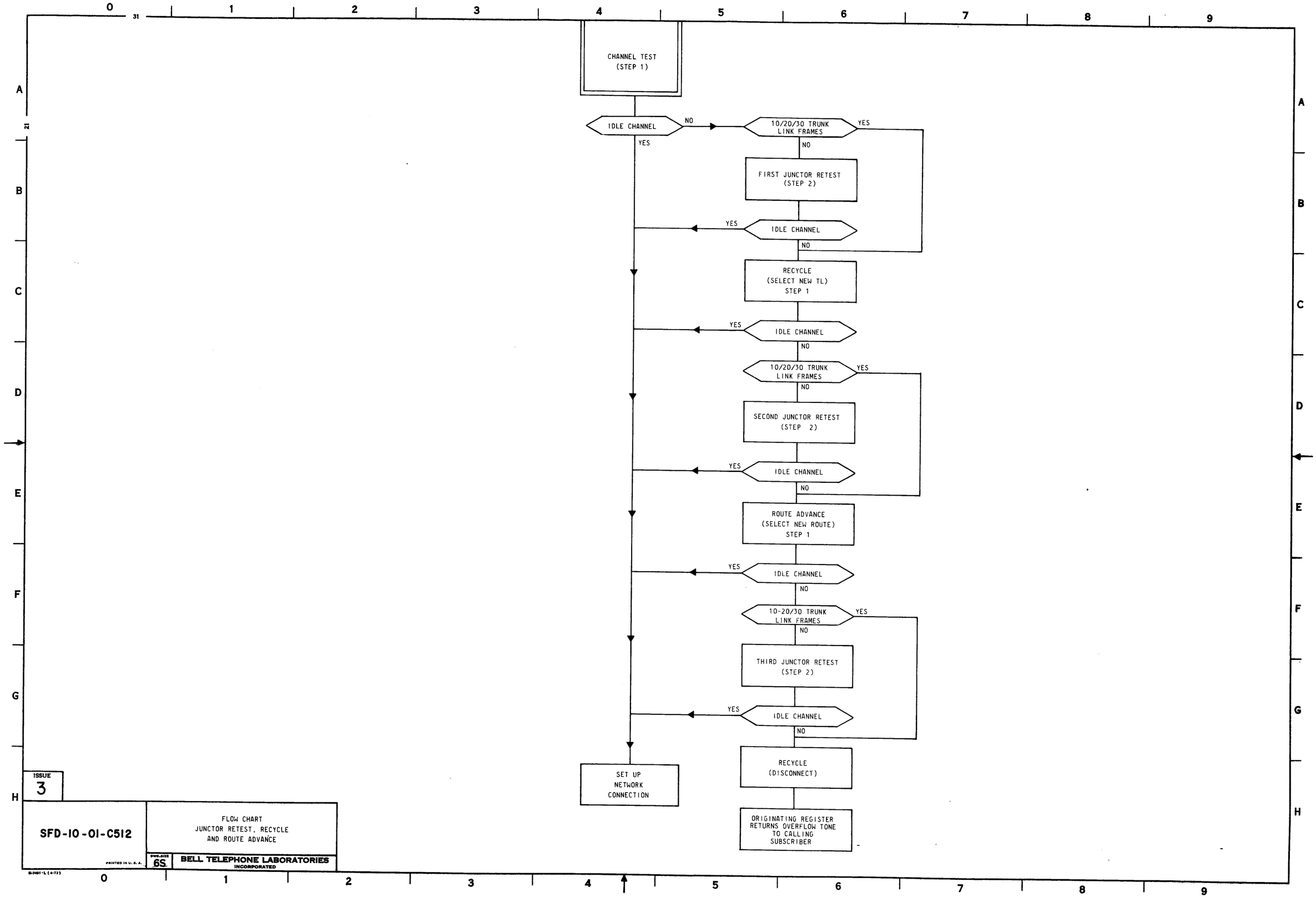

ISSUE 3

SFD-10-01-C512

FLOW CHART
JUNCTOR RETEST, RECYCLE
AND ROUTE ADVANCE

DWG. SIZE 6S

BELL TELEPHONE LABORATORIES
INCORPORATED

PRINTED IN U.S.A.

B-3481-L (4-72)

SFD-10-01-C512

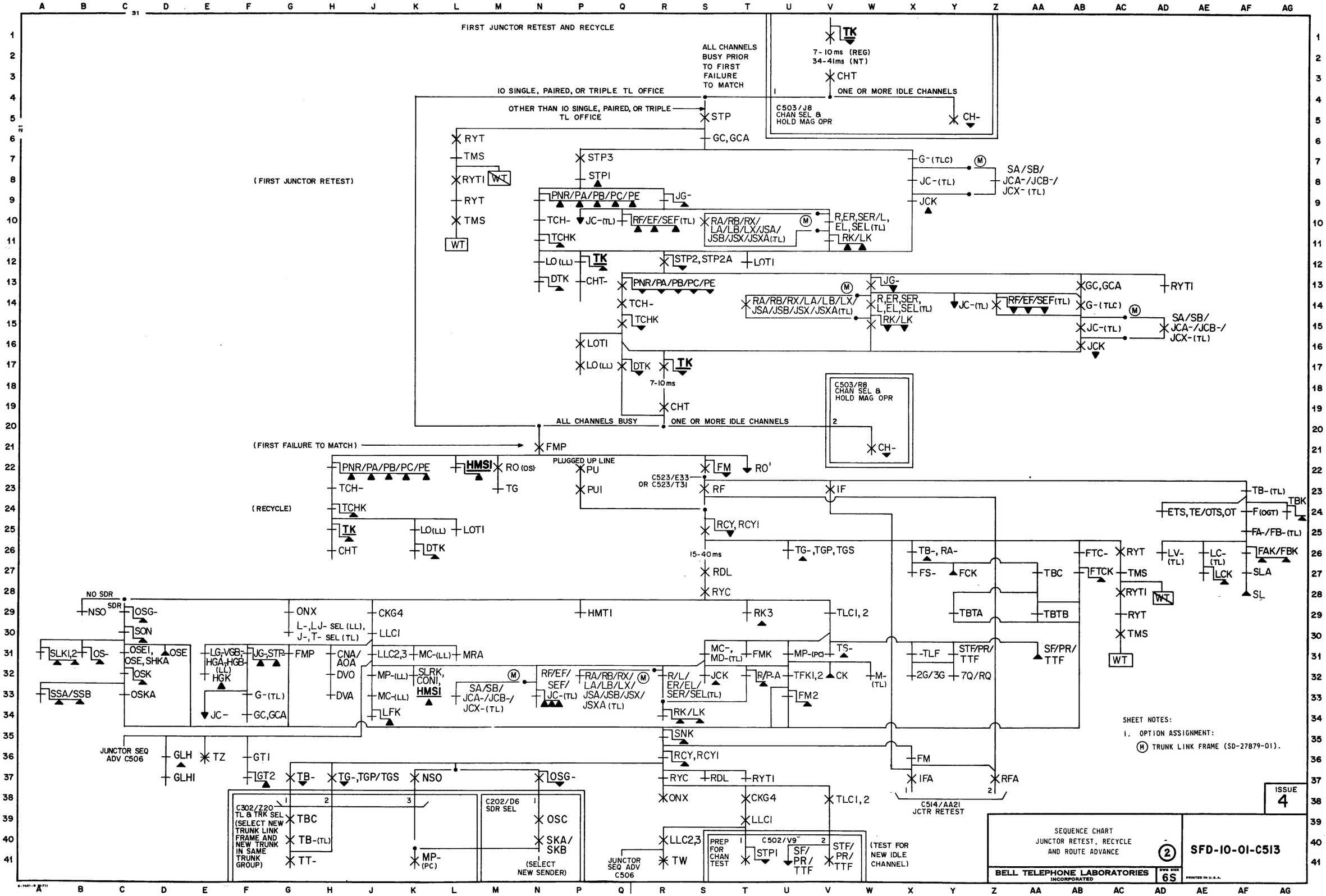

SFD-10-01-C513

SHEET NOTES:

1. OPTION ASSIGNMENT.
   (M) TRUNK LINK FRAME (SD-27879-01).

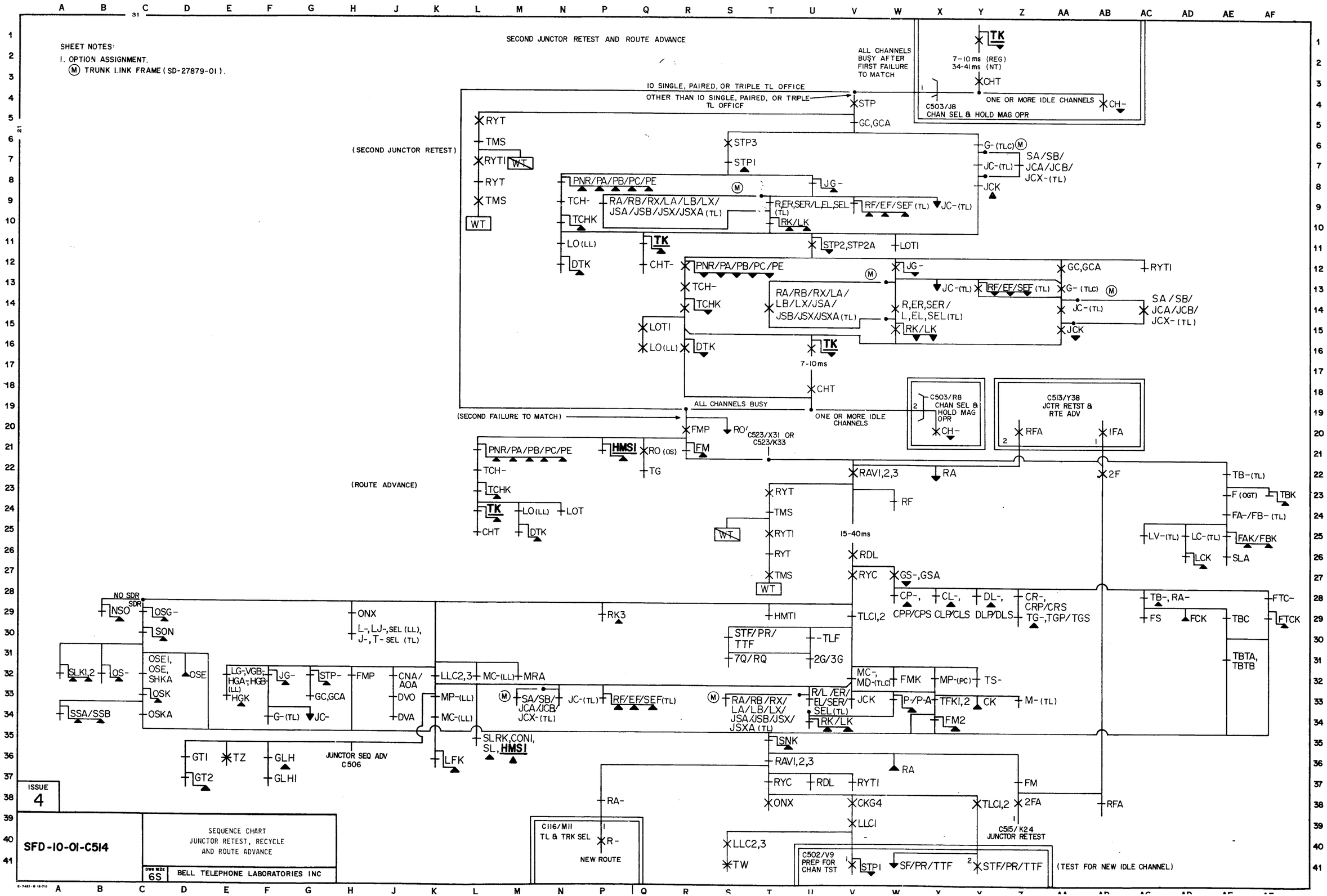

SFD-10-01-C514

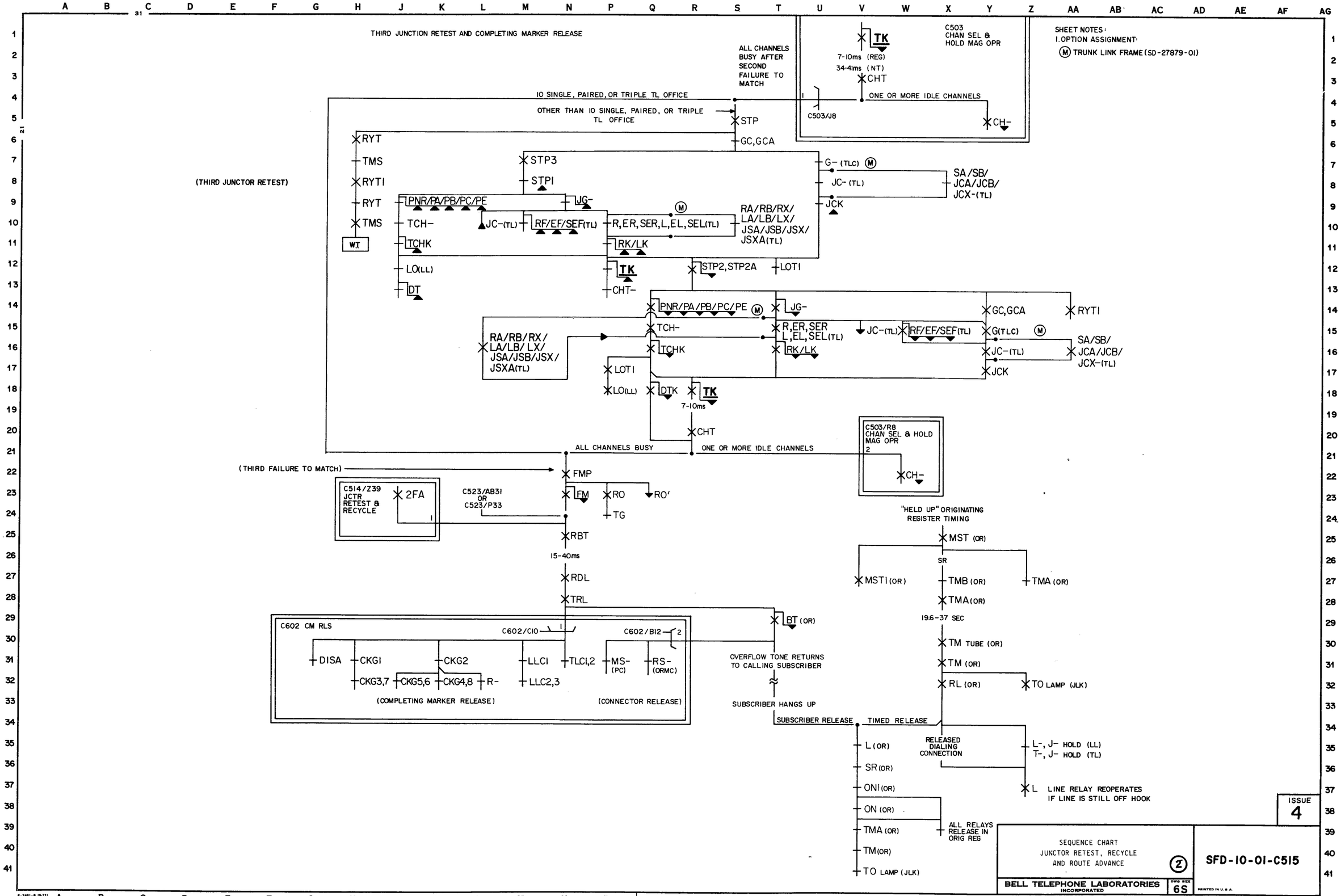

SFD-10-01-C515

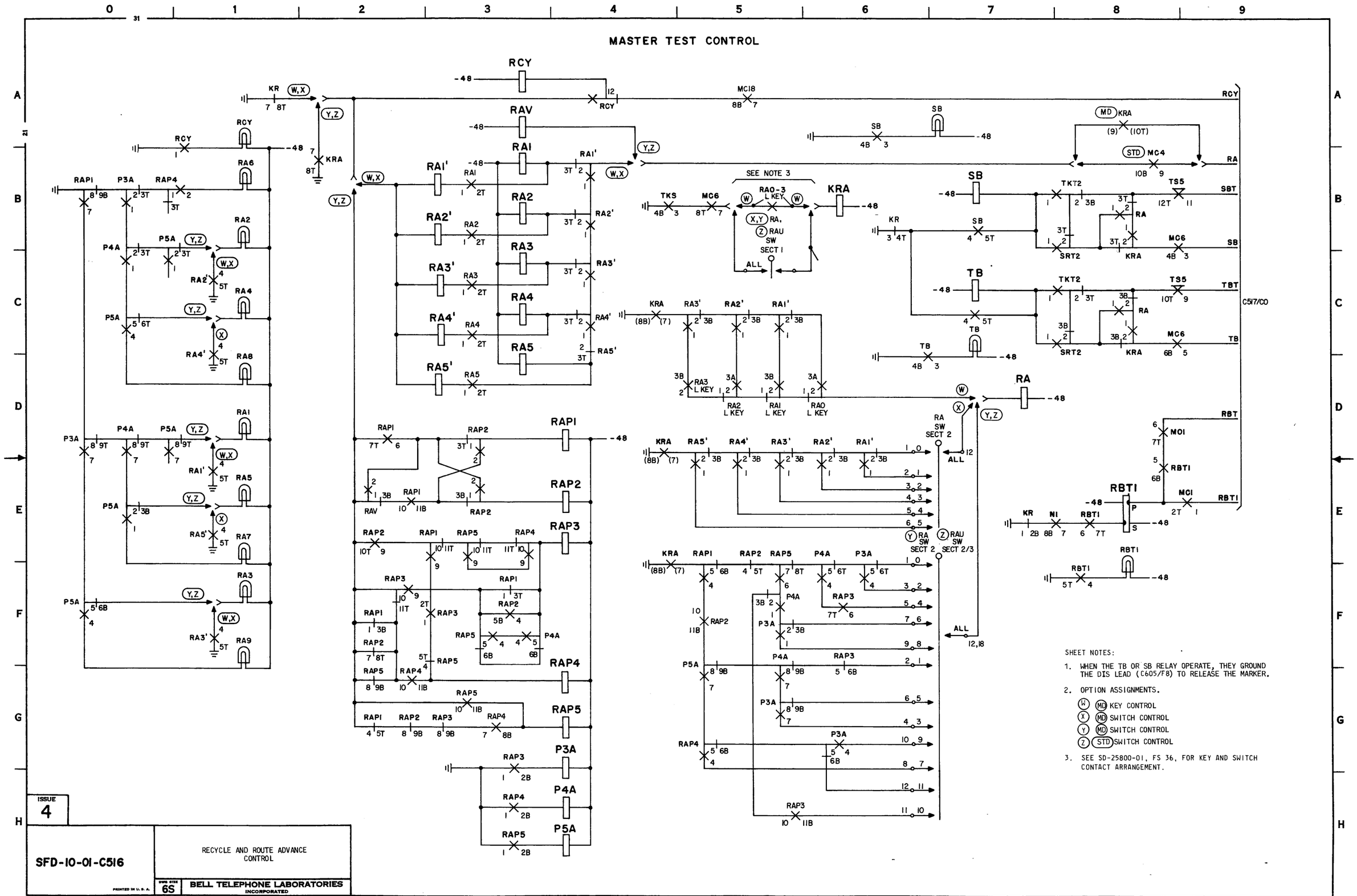
MASTER TEST CONTROL
RCY
RAV
RA1
RA2
RA3
RA4
RA5
RAP1
RAP2
RAP3
RAP4
RAP5
P3A
P4A
P5A
RA6
RA7
RA8
RA9
RA
SB
TB
KRA
RBT
RBT1
SEE NOTE 3
RA0-3 L KEY
RA, RAU SW SECT 1
RA SW SECT 2
RAU SW SECT 2/3
C517/C0
SHEET NOTES:
1. WHEN THE TB OR SB RELAY OPERATE, THEY GROUND THE DIS LEAD (C605/F8) TO RELEASE THE MARKER.
2. OPTION ASSIGNMENTS.
W MD KEY CONTROL
X MD SWITCH CONTROL
Y MD SWITCH CONTROL
Z STD SWITCH CONTROL
3. SEE SD-25800-01, FS 36, FOR KEY AND SWITCH CONTACT ARRANGEMENT.
ISSUE 4
SFD-10-01-C516
RECYCLE AND ROUTE ADVANCE CONTROL
DWG SIZE 6S
BELL TELEPHONE LABORATORIES INCORPORATED
PRINTED IN U. S. A.
SFD-10-01-C516

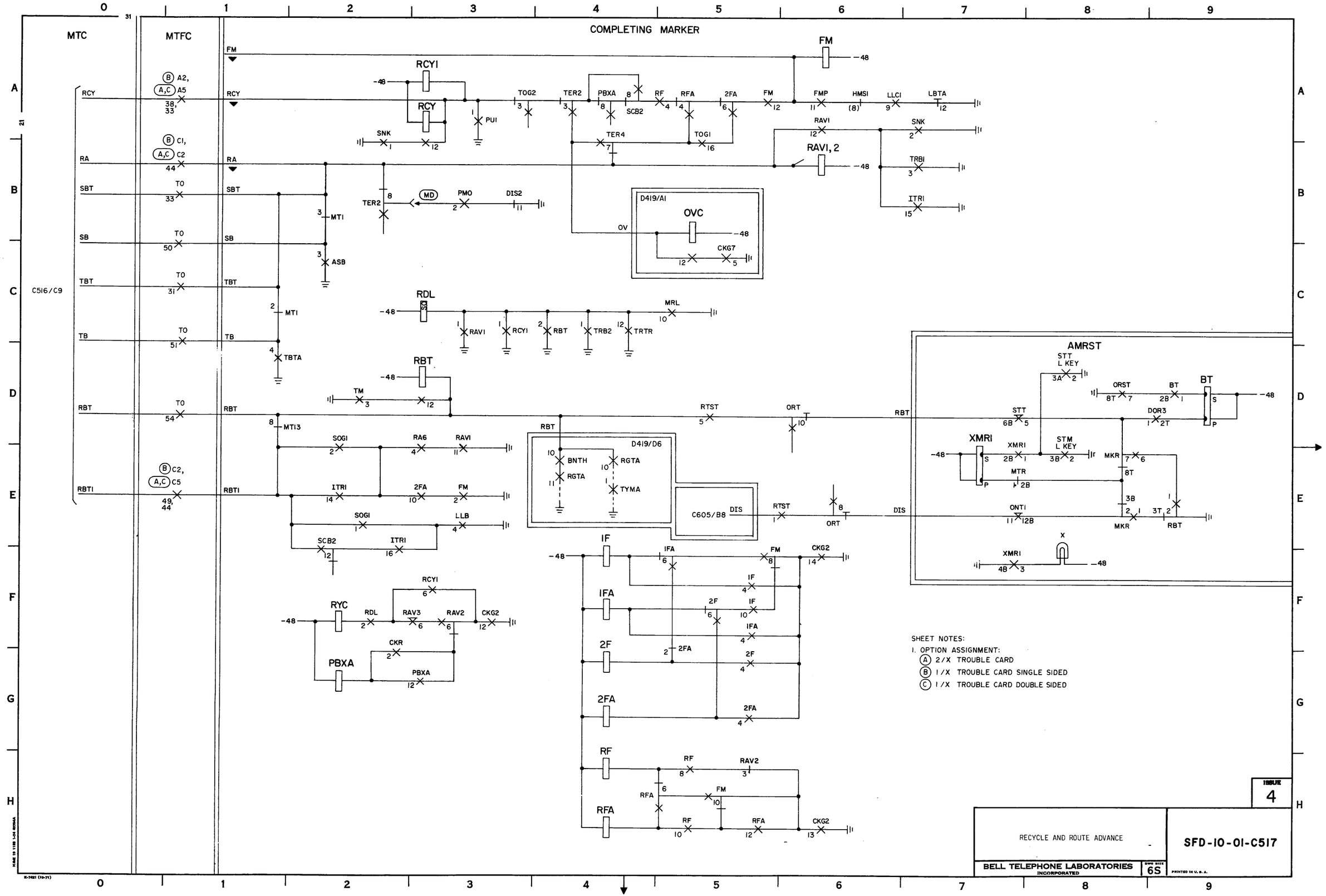
COMPLETING MARKER
MTC
MTFC
C516/C9
RCY1
RCY
RA
SBT
SB
TBT
TB
RBT
RBTI
RAV1, 2
OVC
D419/A1
RDL
RBT
D419/D6
C605/B8
AMRST
XMRI
BT
IF
IFA
2F
2FA
RF
RFA
RYC
PBXA
SHEET NOTES:
1. OPTION ASSIGNMENT:
(A) 2/X TROUBLE CARD
(B) 1/X TROUBLE CARD SINGLE SIDED
(C) 1/X TROUBLE CARD DOUBLE SIDED
ISSUE 4
RECYCLE AND ROUTE ADVANCE
SFD-10-01-C517
BELL TELEPHONE LABORATORIES INCORPORATED
DWG SIZE 6S
PRINTED IN U.S.A.
SFD-10-01-C517

COMPLETING MARKER

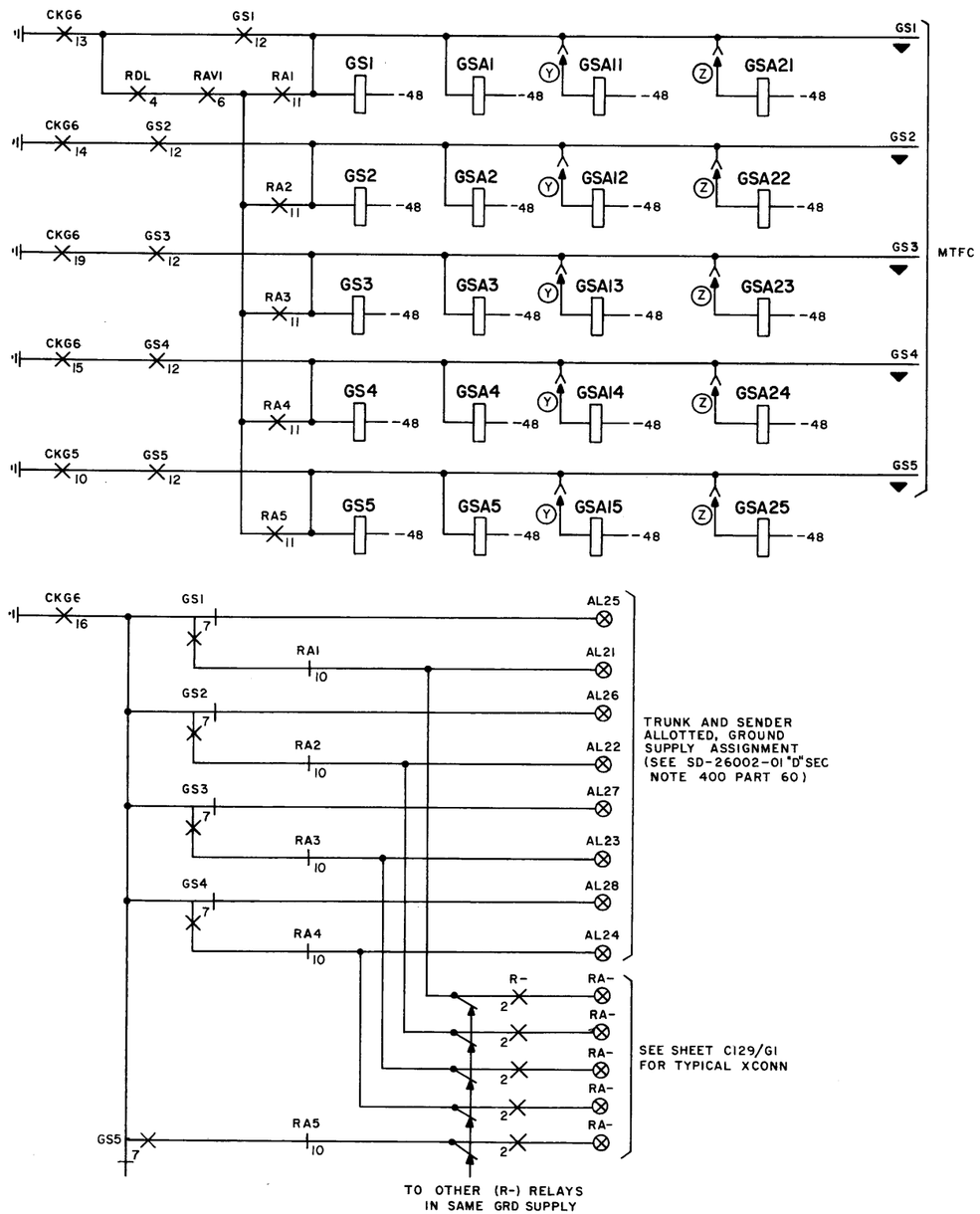

SHEET NOTES:

1. OPTION ASSIGNMENTS:

(Y) 10 OR MORE TRUNK LINK FRAMES.

(Z) 20 OR MORE TRUNK LINK FRAMES.

ISSUE 4

GROUND SUPPLY AND ROUTE ADVANCE

SFD-10-01-C519

BELL TELEPHONE LABORATORIES INCORPORATED

DWG SIZE 6S

PRINTED IN U. S. A.

SFD-10-01-C519

K&E 19 1189 11-72 GRAFTEX

E-7481 (10-71)

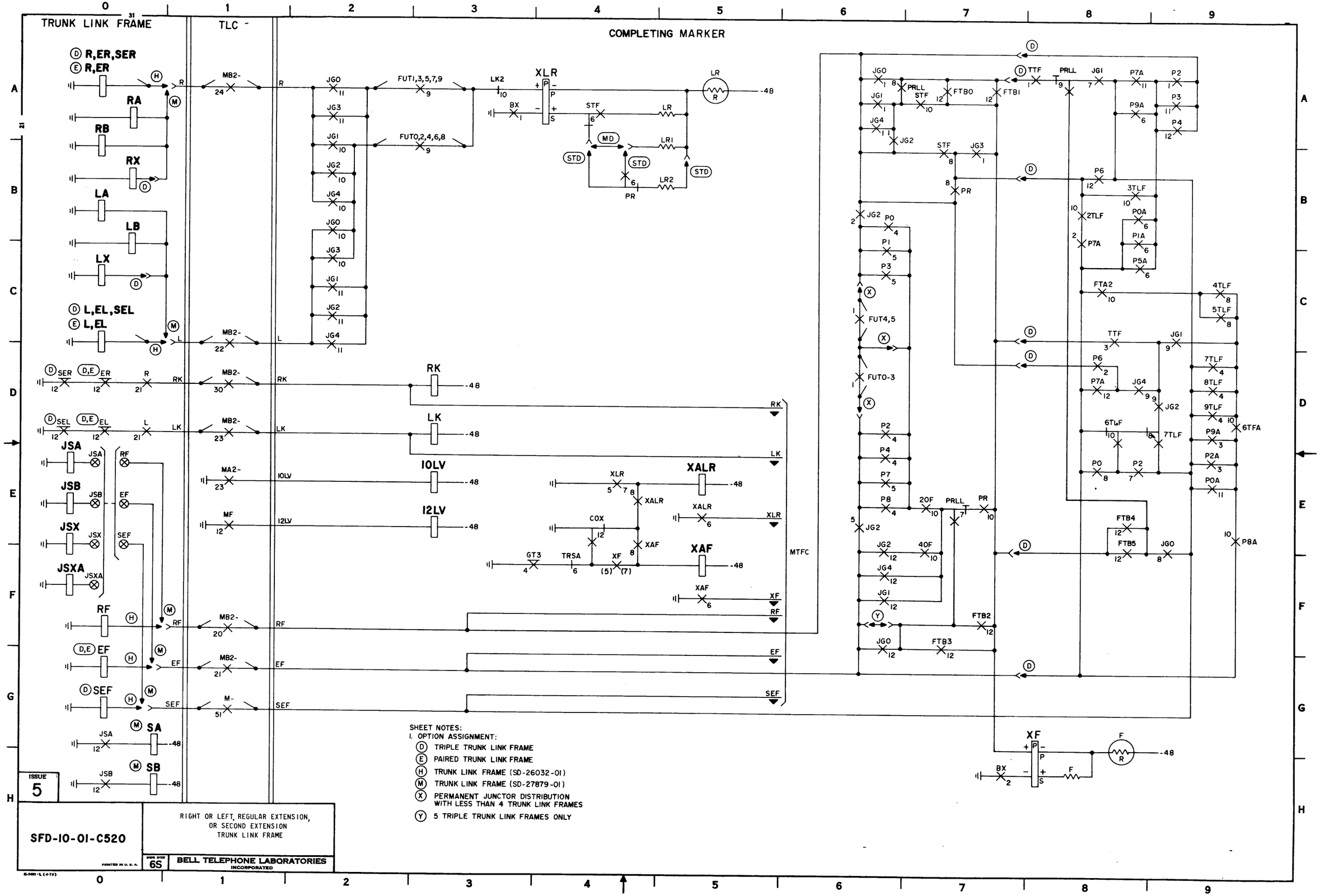
TRUNK LINK FRAME
TLC
COMPLETING MARKER
D R,ER,SER
E R,ER
RA
RB
RX
LA
LB
LX
D L,EL,SEL
E L,EL
D SER
D,E ER
D SEL
D,E EL
JSA
JSB
JSX
JSXA
RF
D,E EF
D SEF
SA
SB
RK
LK
IOLV
I2LV
XLR
XALR
XAF
MTFC
LR
LR1
LR2
MD
STD
PR
FUT1,3,5,7,9
FUT0,2,4,6,8
FUT4,5
FUTO-3
FTA2
FTB0
FTB1
FTB2
FTB3
FTB4
FTB5
3TLF
2TLF
4TLF
5TLF
7TLF
8TLF
9TLF
6TLF
6TFA
P8A
XF
F
-48
SHEET NOTES:
1. OPTION ASSIGNMENT:
D TRIPLE TRUNK LINK FRAME
E PAIRED TRUNK LINK FRAME
H TRUNK LINK FRAME (SD-26032-01)
M TRUNK LINK FRAME (SD-27879-01)
X PERMANENT JUNCTOR DISTRIBUTION WITH LESS THAN 4 TRUNK LINK FRAMES
Y 5 TRIPLE TRUNK LINK FRAMES ONLY
ISSUE 5
SFD-10-01-C520
RIGHT OR LEFT, REGULAR EXTENSION, OR SECOND EXTENSION TRUNK LINK FRAME
DWG SIZE 6S
BELL TELEPHONE LABORATORIES INCORPORATED
PRINTED IN U.S.A.
SFD-10-01-C520

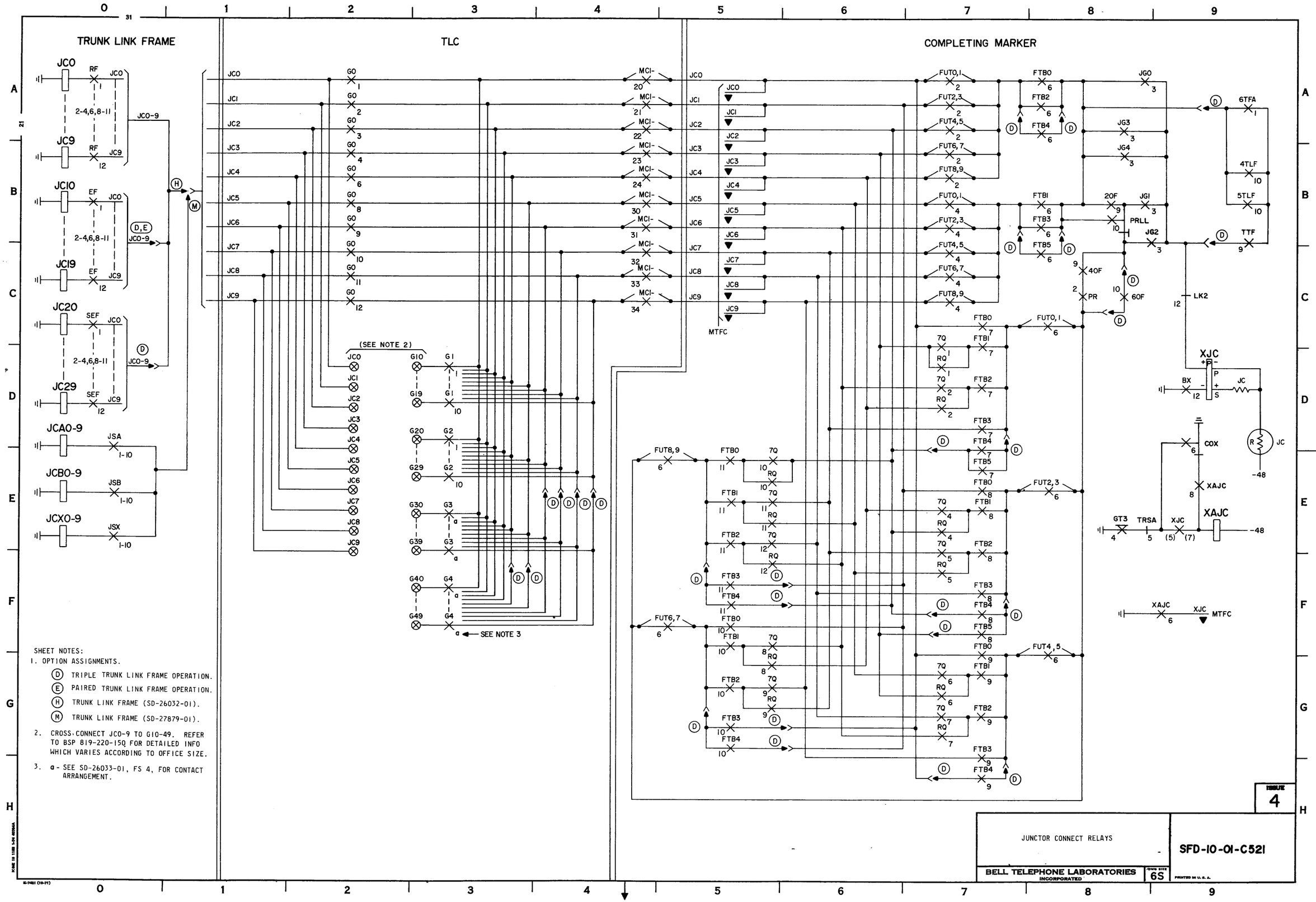
TRUNK LINK FRAME
TLC
COMPLETING MARKER
JC0
JC9
JC10
JC19
JC20
JC29
JCA0-9
JCB0-9
JCX0-9
JCO-9
D,E
(SEE NOTE 2)
SEE NOTE 3
MTFC
XJC
XAJC
COX
JC
-48
PRLL
LK2
6TFA
4TLF
5TLF
TTF
SHEET NOTES:
1. OPTION ASSIGNMENTS.
D TRIPLE TRUNK LINK FRAME OPERATION.
E PAIRED TRUNK LINK FRAME OPERATION.
H TRUNK LINK FRAME (SD-26032-01).
M TRUNK LINK FRAME (SD-27879-01).
2. CROSS-CONNECT JC0-9 TO G10-49. REFER TO BSP 819-220-150 FOR DETAILED INFO WHICH VARIES ACCORDING TO OFFICE SIZE.
3. a - SEE SD-26033-01, FS 4, FOR CONTACT ARRANGEMENT.
ISSUE 4
JUNCTOR CONNECT RELAYS
BELL TELEPHONE LABORATORIES INCORPORATED
DWG SIZE 6S
SFD-10-01-C521
PRINTED IN U.S.A.
SFD-10-01-C521

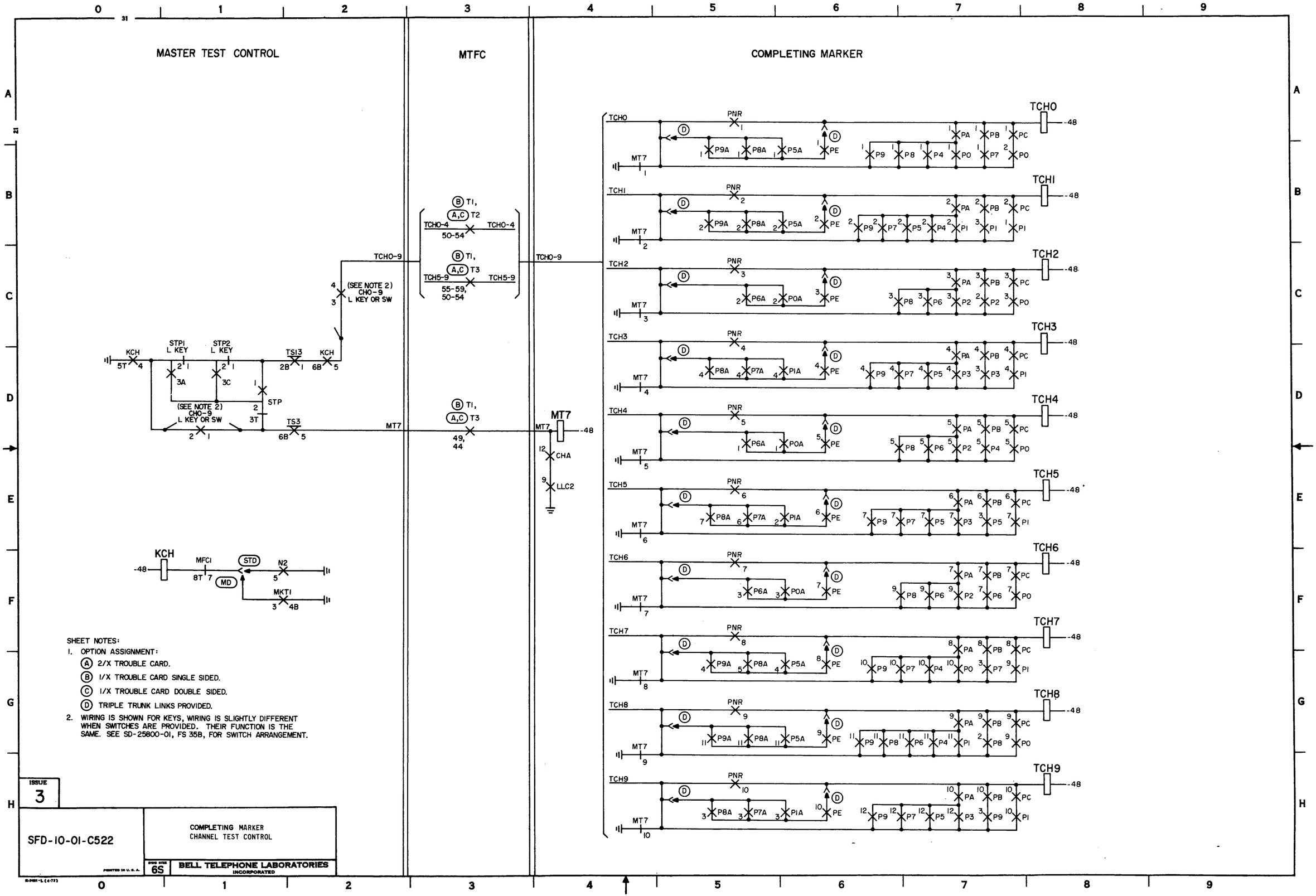
MASTER TEST CONTROL
MTFC
COMPLETING MARKER
KCH
STP1 L KEY
STP2 L KEY
TS13
STP
TS3
(SEE NOTE 2) CHO-9 L KEY OR SW
TCHO-9
MT7
TCHO-4
TCH5-9
50-54
55-59, 50-54
49, 44
CHA
LLC2
MFCI
STD
MD
N2
MKTI
PNR
PE
PA
PB
PC
PO
PI
TCHO
TCH1
TCH2
TCH3
TCH4
TCH5
TCH6
TCH7
TCH8
TCH9
SHEET NOTES:
1. OPTION ASSIGNMENT:
(A) 2/X TROUBLE CARD.
(B) 1/X TROUBLE CARD SINGLE SIDED.
(C) 1/X TROUBLE CARD DOUBLE SIDED.
(D) TRIPLE TRUNK LINKS PROVIDED.
2. WIRING IS SHOWN FOR KEYS, WIRING IS SLIGHTLY DIFFERENT WHEN SWITCHES ARE PROVIDED. THEIR FUNCTION IS THE SAME. SEE SD-25800-01, FS 35B, FOR SWITCH ARRANGEMENT.
ISSUE 3
SFD-10-01-C522
COMPLETING MARKER
CHANNEL TEST CONTROL
6S
BELL TELEPHONE LABORATORIES
INCORPORATED
SFD-10-01-C522

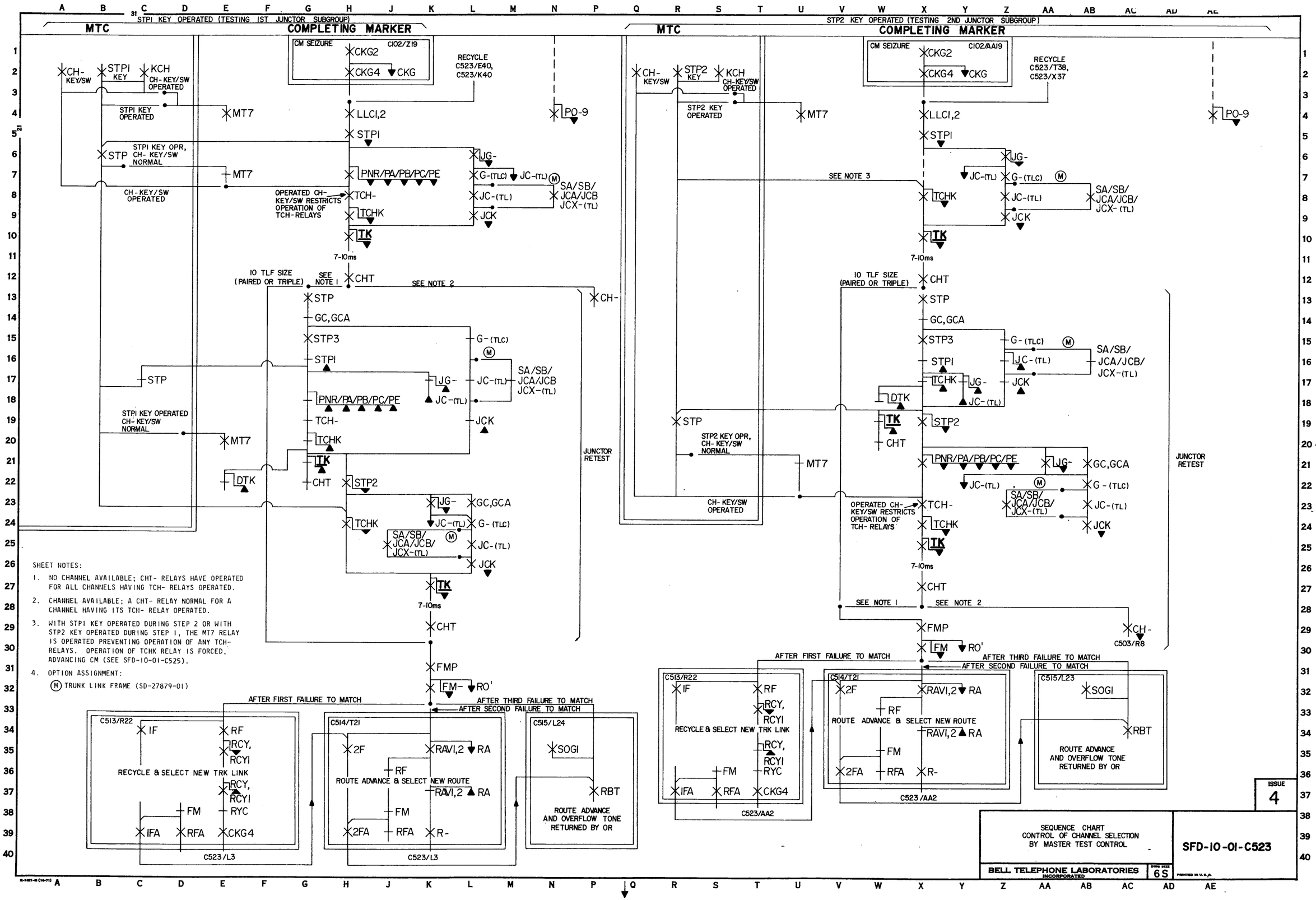

ISSUE 4

SEQUENCE CHART
CONTROL OF CHANNEL SELECTION
BY MASTER TEST CONTROL

BELL TELEPHONE LABORATORIES INCORPORATED

SIZE 6S

SFD-10-01-C523

PRINTED IN U.S.A.

SFD-10-01-C523

BRUNING 44-131 24092

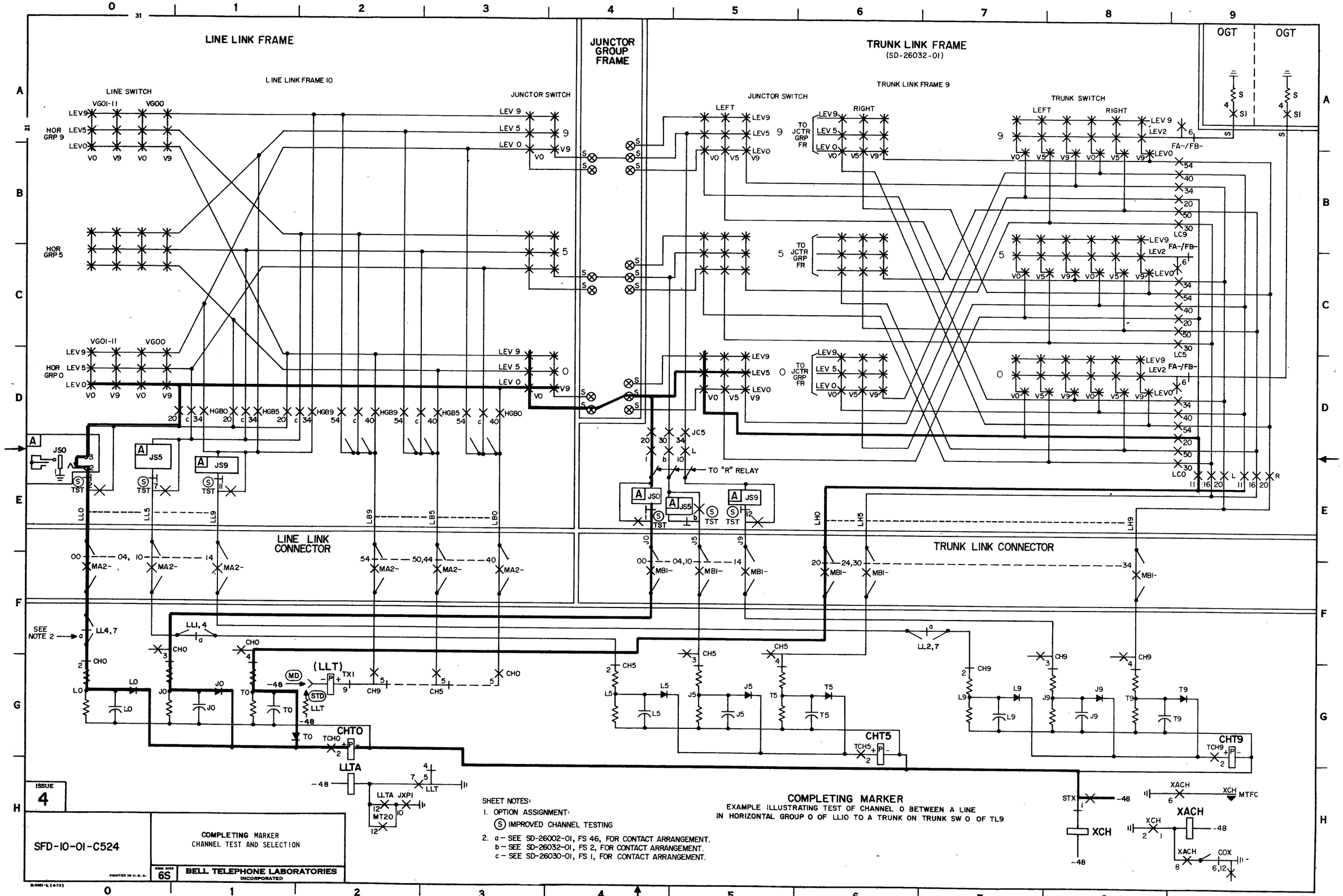

SHEET NOTES:

1. OPTION ASSIGNMENT:
   (S) IMPROVED CHANNEL TESTING
2. a – SEE SD-26002-01, FS 46, FOR CONTACT ARRANGEMENT.
   b – SEE SD-26032-01, FS 2, FOR CONTACT ARRANGEMENT.
   c – SEE SD-26030-01, FS 1, FOR CONTACT ARRANGEMENT.

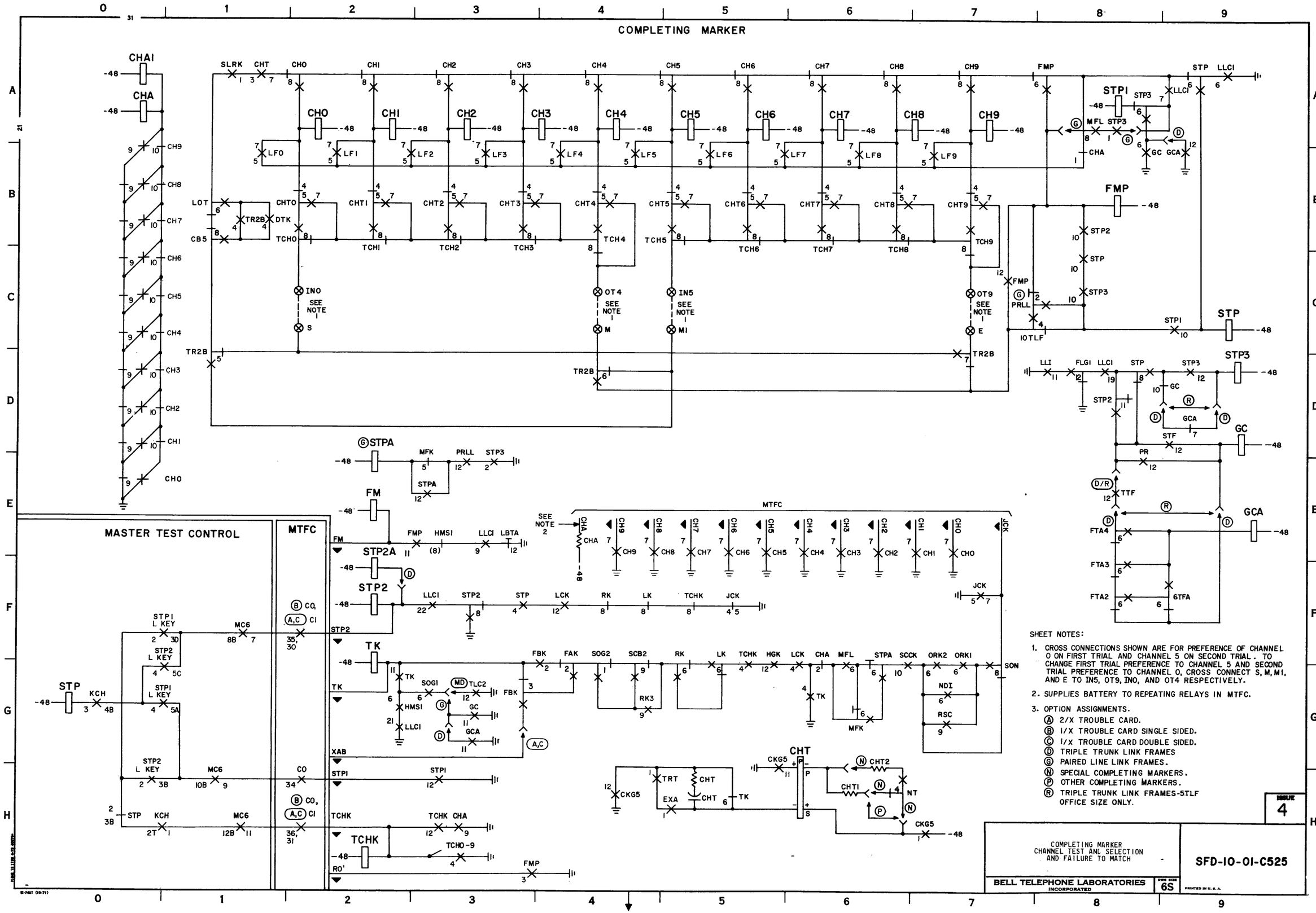

SHEET NOTES:

1. CROSS CONNECTIONS SHOWN ARE FOR PREFERENCE OF CHANNEL 0 ON FIRST TRIAL AND CHANNEL 5 ON SECOND TRIAL. TO CHANGE FIRST TRIAL PREFERENCE TO CHANNEL 5 AND SECOND TRIAL PREFERENCE TO CHANNEL 0, CROSS CONNECT S, M, M1, AND E TO IN5, OT9, IN0, AND OT4 RESPECTIVELY.
2. SUPPLIES BATTERY TO REPEATING RELAYS IN MTFC.
3. OPTION ASSIGNMENTS.
   - (A) 2/X TROUBLE CARD.
   - (B) 1/X TROUBLE CARD SINGLE SIDED.
   - (C) 1/X TROUBLE CARD DOUBLE SIDED.
   - (D) TRIPLE TRUNK LINK FRAMES
   - (G) PAIRED LINE LINK FRAMES.
   - (N) SPECIAL COMPLETING MARKERS.
   - (P) OTHER COMPLETING MARKERS.
   - (R) TRIPLE TRUNK LINK FRAMES-5TLF OFFICE SIZE ONLY.

ISSUE 4

COMPLETING MARKER
CHANNEL TEST AND SELECTION
AND FAILURE TO MATCH

SFD-10-01-C525

BELL TELEPHONE LABORATORIES INCORPORATED

DWG SIZE 6S

PRINTED IN U.S.A.

SFD-10-01-C525

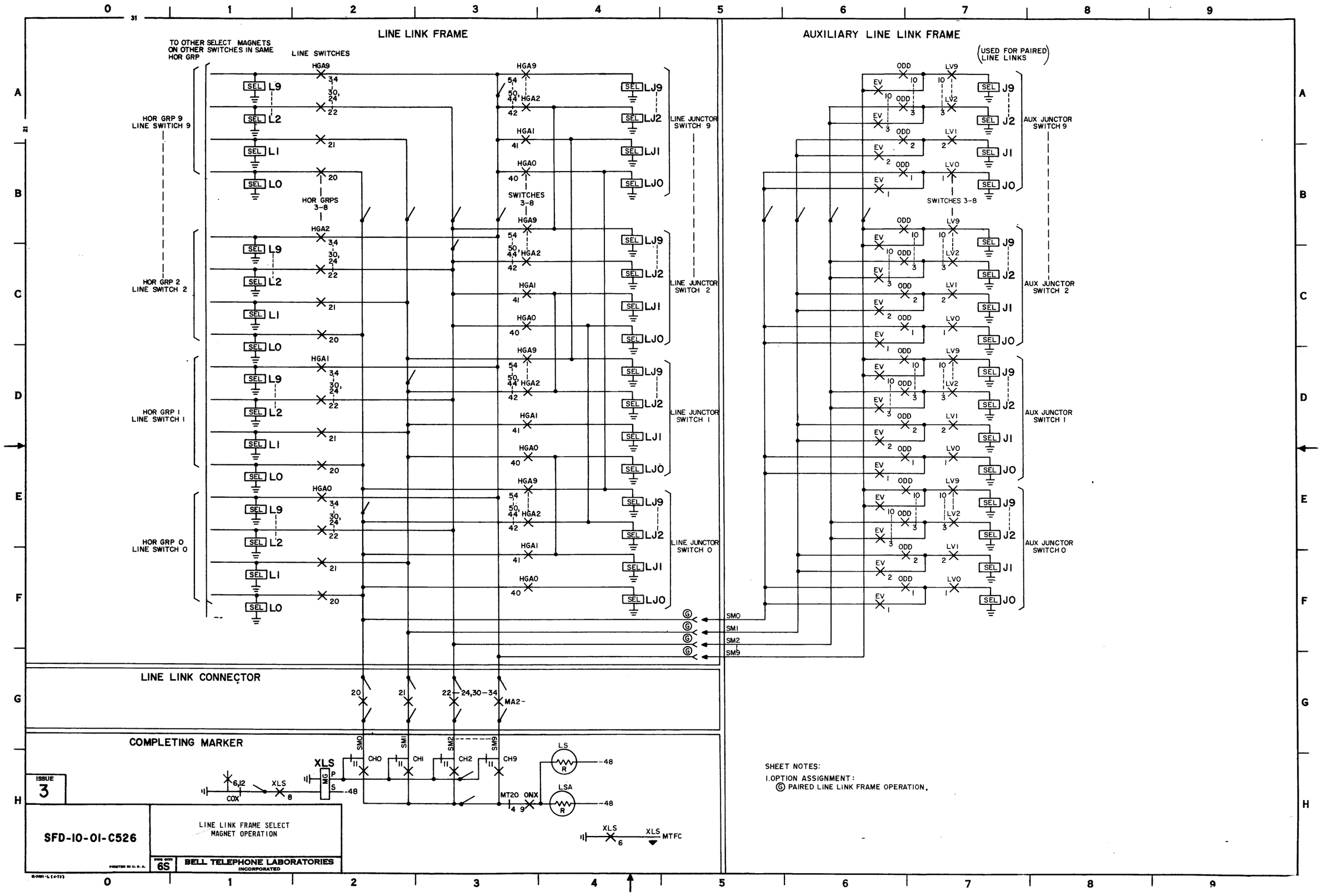

SFD-10-01-C526

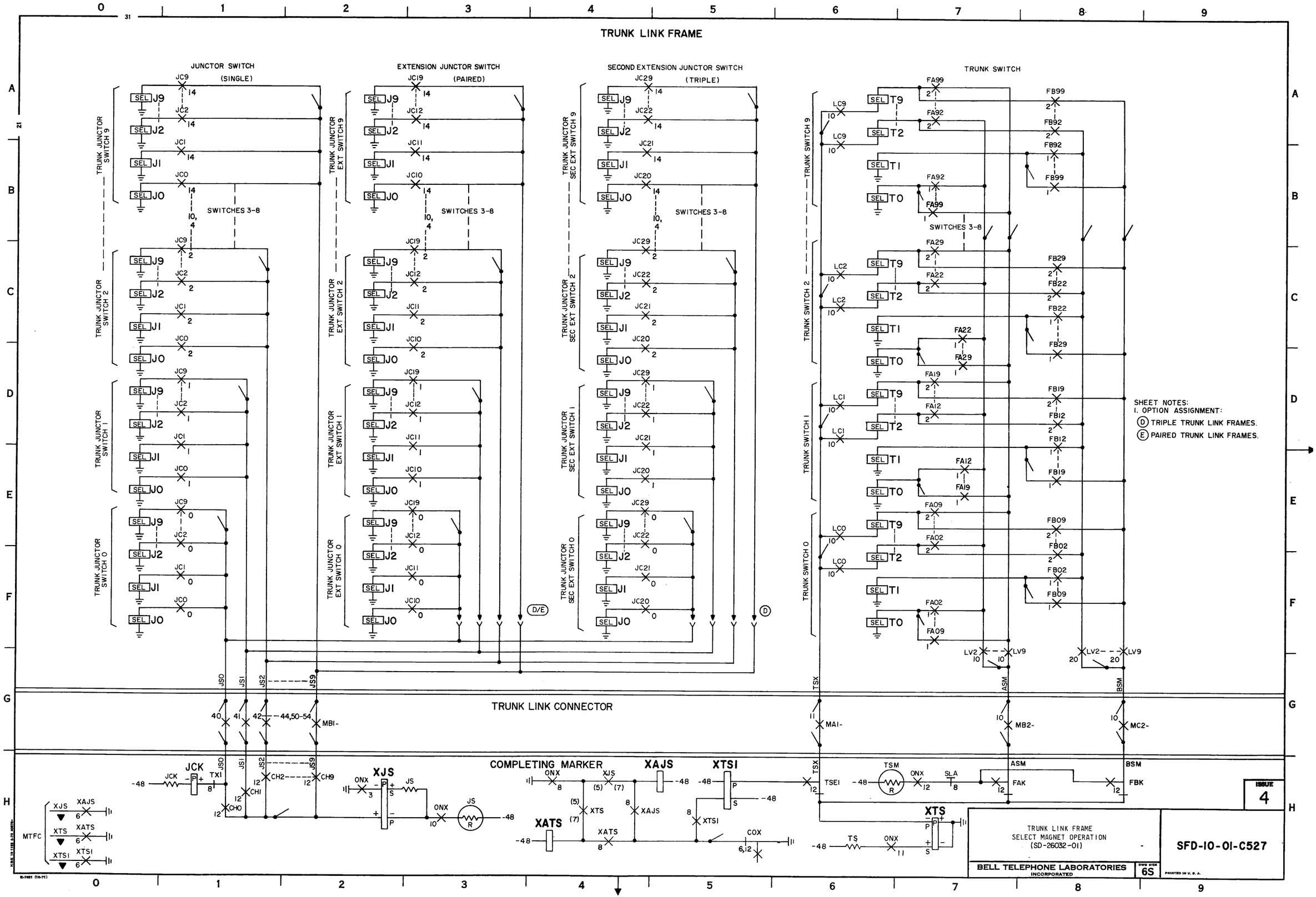

SFD-10-01-C527

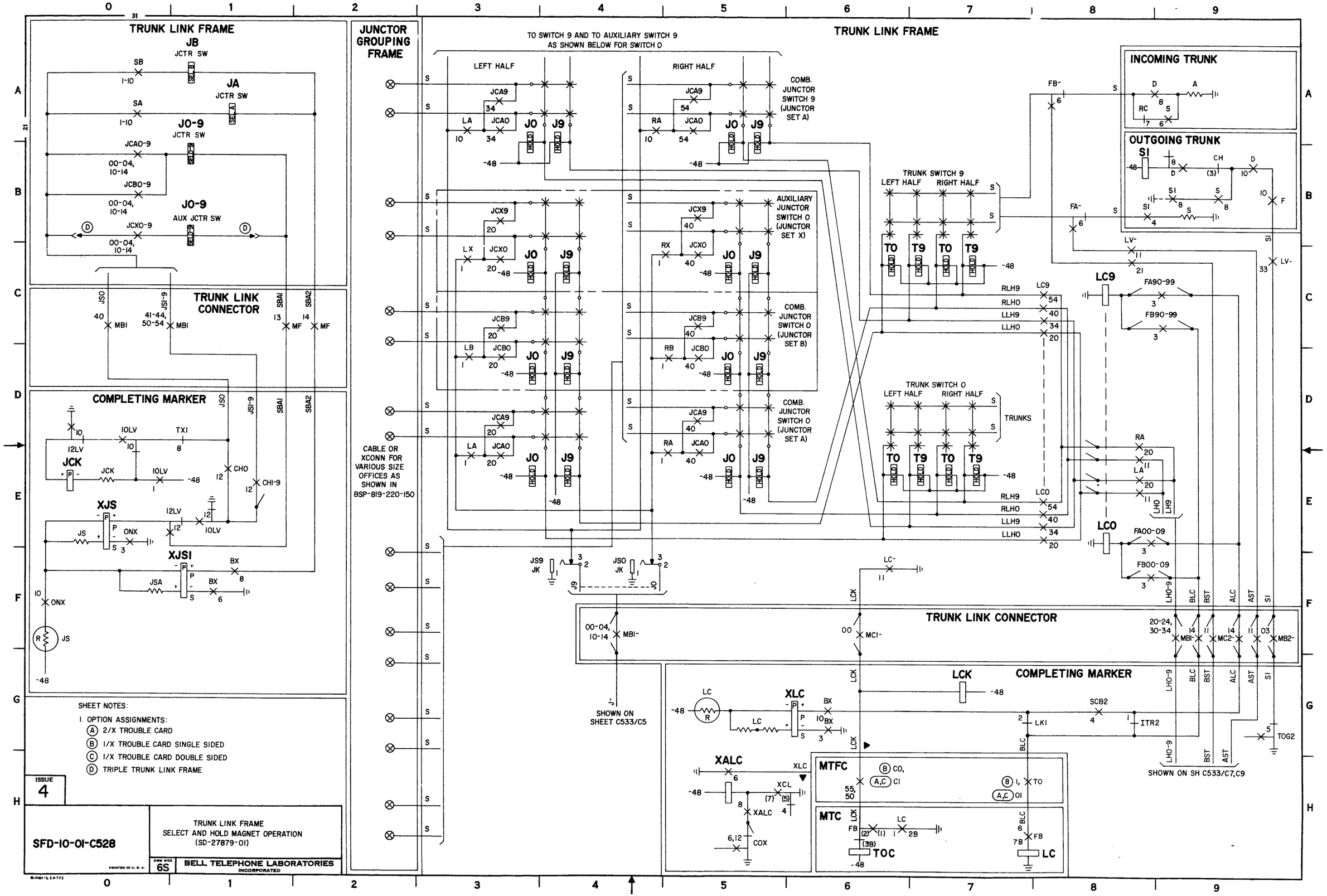
TRUNK LINK FRAME
JB
JCTR SW
JA
JCTR SW
JO-9
JCTR SW
JO-9
AUX JCTR SW
TRUNK LINK CONNECTOR
COMPLETING MARKER
JCK
XJS
XJSI
JUNCTOR GROUPING FRAME
TO SWITCH 9 AND TO AUXILIARY SWITCH 9 AS SHOWN BELOW FOR SWITCH 0
LEFT HALF
RIGHT HALF
COMB. JUNCTOR SWITCH 9 (JUNCTOR SET A)
AUXILIARY JUNCTOR SWITCH 0 (JUNCTOR SET X)
COMB. JUNCTOR SWITCH 0 (JUNCTOR SET B)
COMB. JUNCTOR SWITCH 0 (JUNCTOR SET A)
CABLE OR XCONN FOR VARIOUS SIZE OFFICES AS SHOWN IN BSP-819-220-150
TRUNK SWITCH 9
TRUNK SWITCH 0
TRUNKS
INCOMING TRUNK
OUTGOING TRUNK
S1
LC9
LC0
TRUNK LINK CONNECTOR
COMPLETING MARKER
LCK
XLC
XALC
MTFC
MTC
TOC
LC
SHOWN ON SHEET C533/C5
SHOWN ON SH C533/C7,C9
SHEET NOTES:
1. OPTION ASSIGNMENTS:
(A) 2/X TROUBLE CARD
(B) 1/X TROUBLE CARD SINGLE SIDED
(C) 1/X TROUBLE CARD DOUBLE SIDED
(D) TRIPLE TRUNK LINK FRAME
ISSUE 4
SFD-10-01-C528
TRUNK LINK FRAME
SELECT AND HOLD MAGNET OPERATION
(SD-27879-01)
DWG SIZE 6S
BELL TELEPHONE LABORATORIES INCORPORATED
PRINTED IN U.S.A.
SFD-10-01-C528

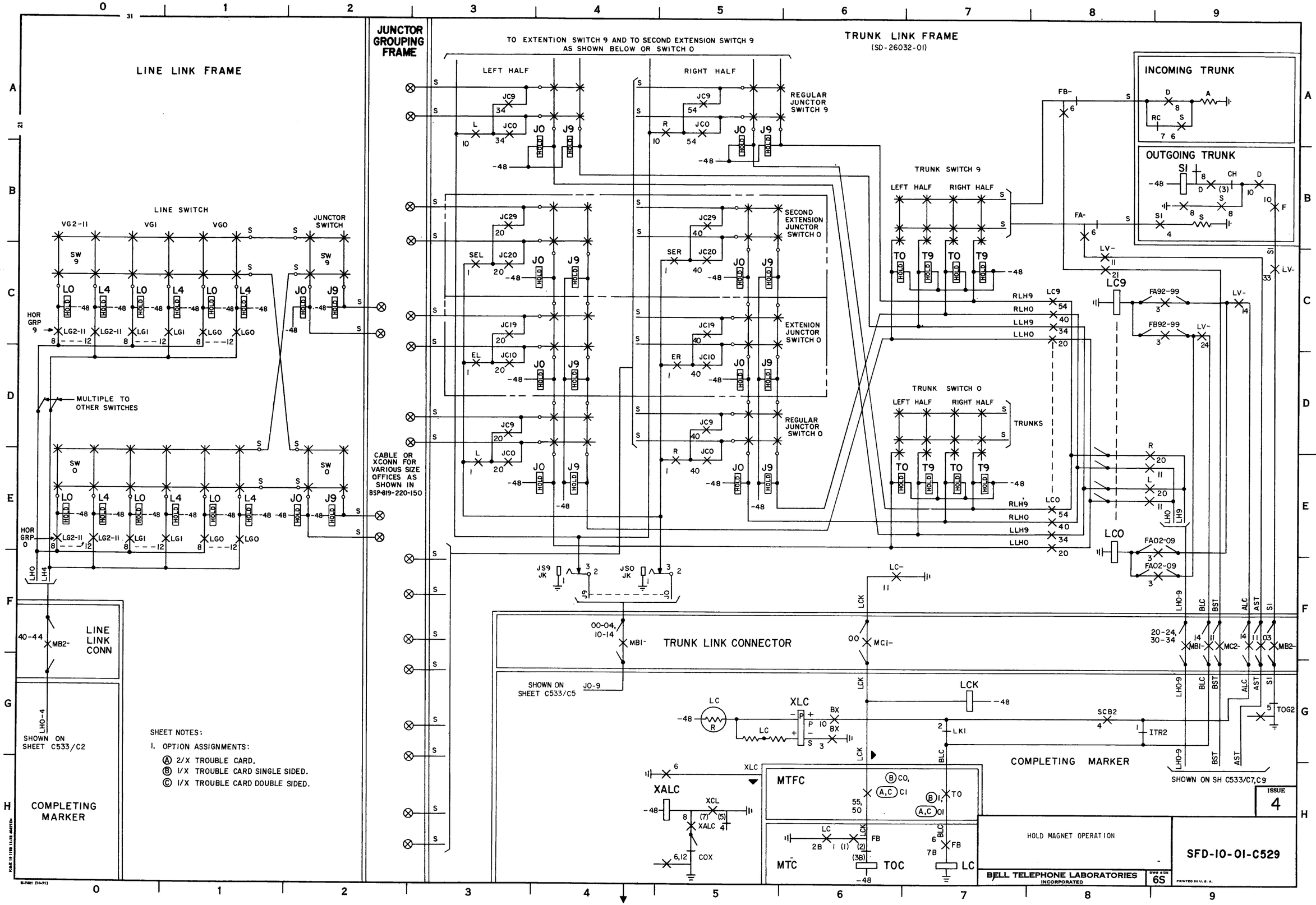
LINE LINK FRAME
JUNCTOR GROUPING FRAME
TRUNK LINK FRAME
(SD-26032-01)
TO EXTENTION SWITCH 9 AND TO SECOND EXTENSION SWITCH 9
AS SHOWN BELOW OR SWITCH 0
LEFT HALF
RIGHT HALF
REGULAR JUNCTOR SWITCH 9
SECOND EXTENSION JUNCTOR SWITCH 0
EXTENION JUNCTOR SWITCH 0
REGULAR JUNCTOR SWITCH 0
LINE SWITCH
JUNCTOR SWITCH
MULTIPLE TO OTHER SWITCHES
CABLE OR XCONN FOR VARIOUS SIZE OFFICES AS SHOWN IN BSP-819-220-150
TRUNK SWITCH 9
TRUNK SWITCH 0
TRUNKS
INCOMING TRUNK
OUTGOING TRUNK
TRUNK LINK CONNECTOR
SHOWN ON SHEET C533/C5
LINE LINK CONN
COMPLETING MARKER
SHOWN ON SHEET C533/C2
SHOWN ON SH C533/C7,C9
MTFC
MTC
TOC
HOLD MAGNET OPERATION
SHEET NOTES:
1. OPTION ASSIGNMENTS:
Ⓐ 2/X TROUBLE CARD.
Ⓑ 1/X TROUBLE CARD SINGLE SIDED.
Ⓒ 1/X TROUBLE CARD DOUBLE SIDED.
ISSUE 4
SFD-10-01-C529
BELL TELEPHONE LABORATORIES INCORPORATED
DWG SIZE 6S
PRINTED IN U.S.A.

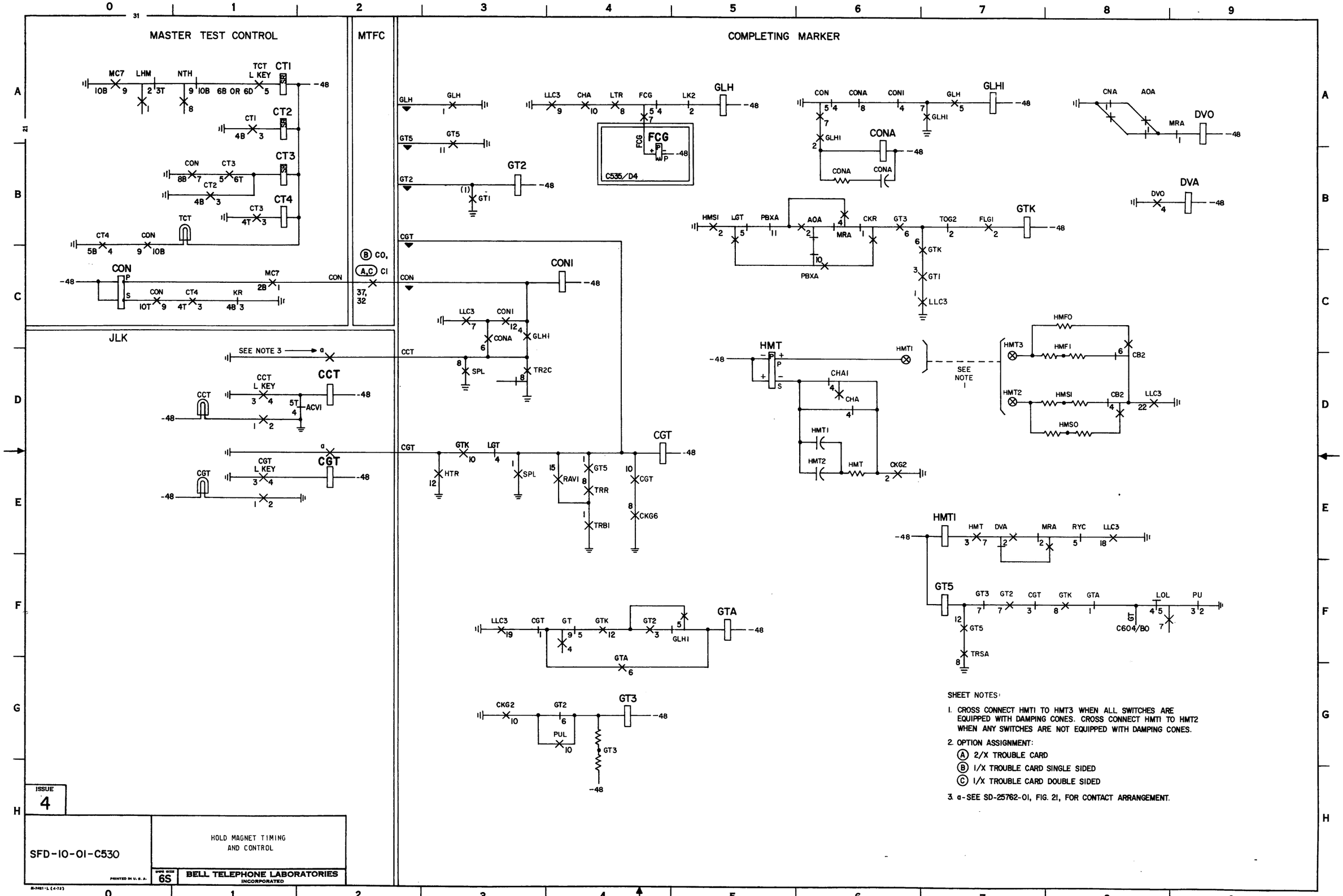
MASTER TEST CONTROL
MTFC
COMPLETING MARKER
JLK
CT1
CT2
CT3
CT4
CON
CCT
CGT
GLH
GLHI
GT2
GT5
GTK
GTA
GT3
HMT
HMTI
DVO
DVA
FCG
C535/D4
C604/BO
SEE NOTE 3
SEE NOTE 1
SHEET NOTES:
1. CROSS CONNECT HMTI TO HMT3 WHEN ALL SWITCHES ARE EQUIPPED WITH DAMPING CONES. CROSS CONNECT HMTI TO HMT2 WHEN ANY SWITCHES ARE NOT EQUIPPED WITH DAMPING CONES.
2. OPTION ASSIGNMENT:
(A) 2/X TROUBLE CARD
(B) 1/X TROUBLE CARD SINGLE SIDED
(C) 1/X TROUBLE CARD DOUBLE SIDED
3. α-SEE SD-25762-01, FIG. 21, FOR CONTACT ARRANGEMENT.
ISSUE 4
SFD-10-01-C530
HOLD MAGNET TIMING AND CONTROL
6S
BELL TELEPHONE LABORATORIES INCORPORATED
PRINTED IN U.S.A.
SFD-10-01-C530

COMPLETING MARKER

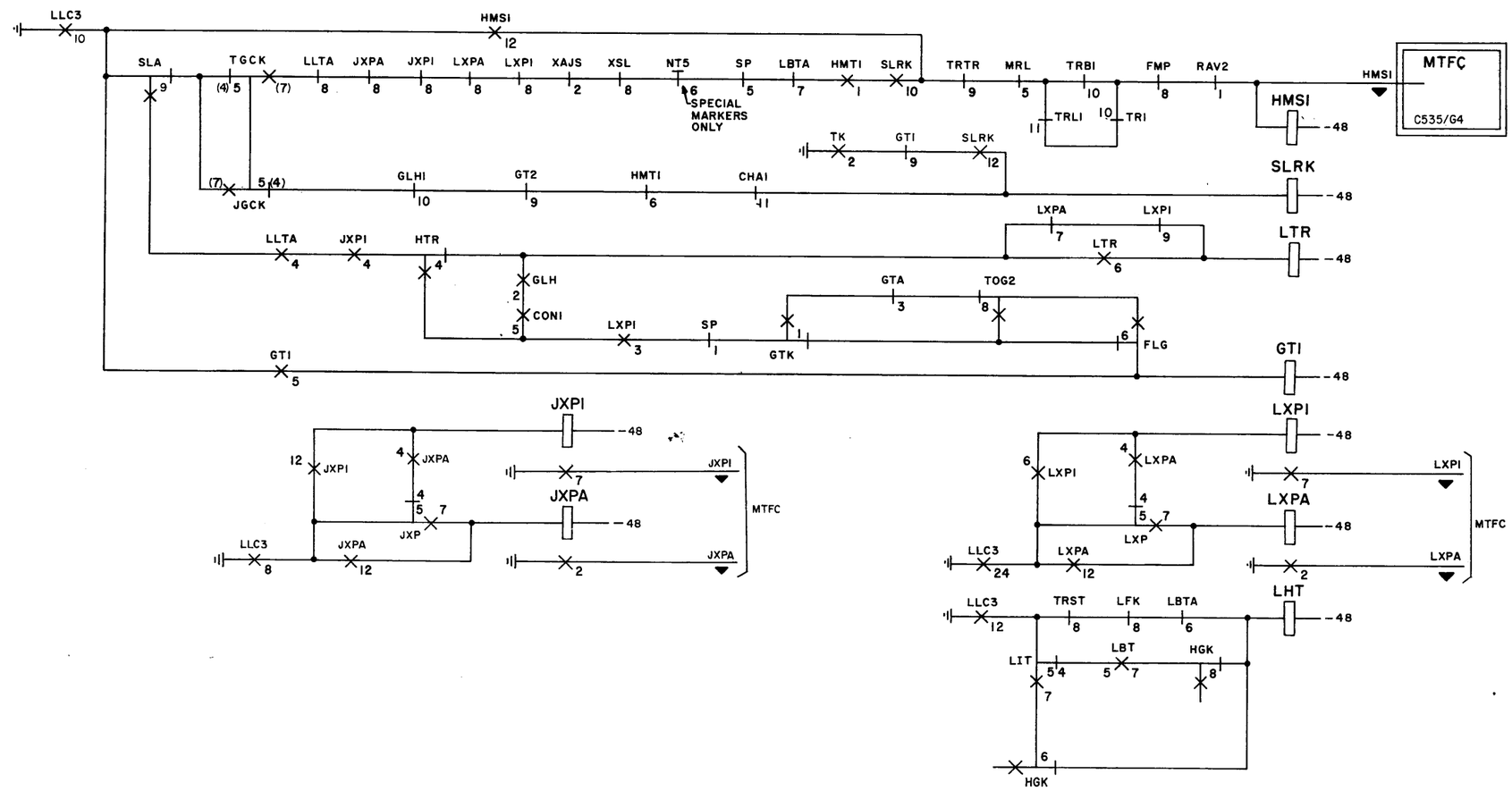

ISSUE 4

HOLD MAGNET TIMING AND CONTROL

SFD-10-01-C531

BELL TELEPHONE LABORATORIES INCORPORATED

DWG SIZE 6S

PRINTED IN U. S. A.

SFD-10-01-C531

E-7421 (10-71)

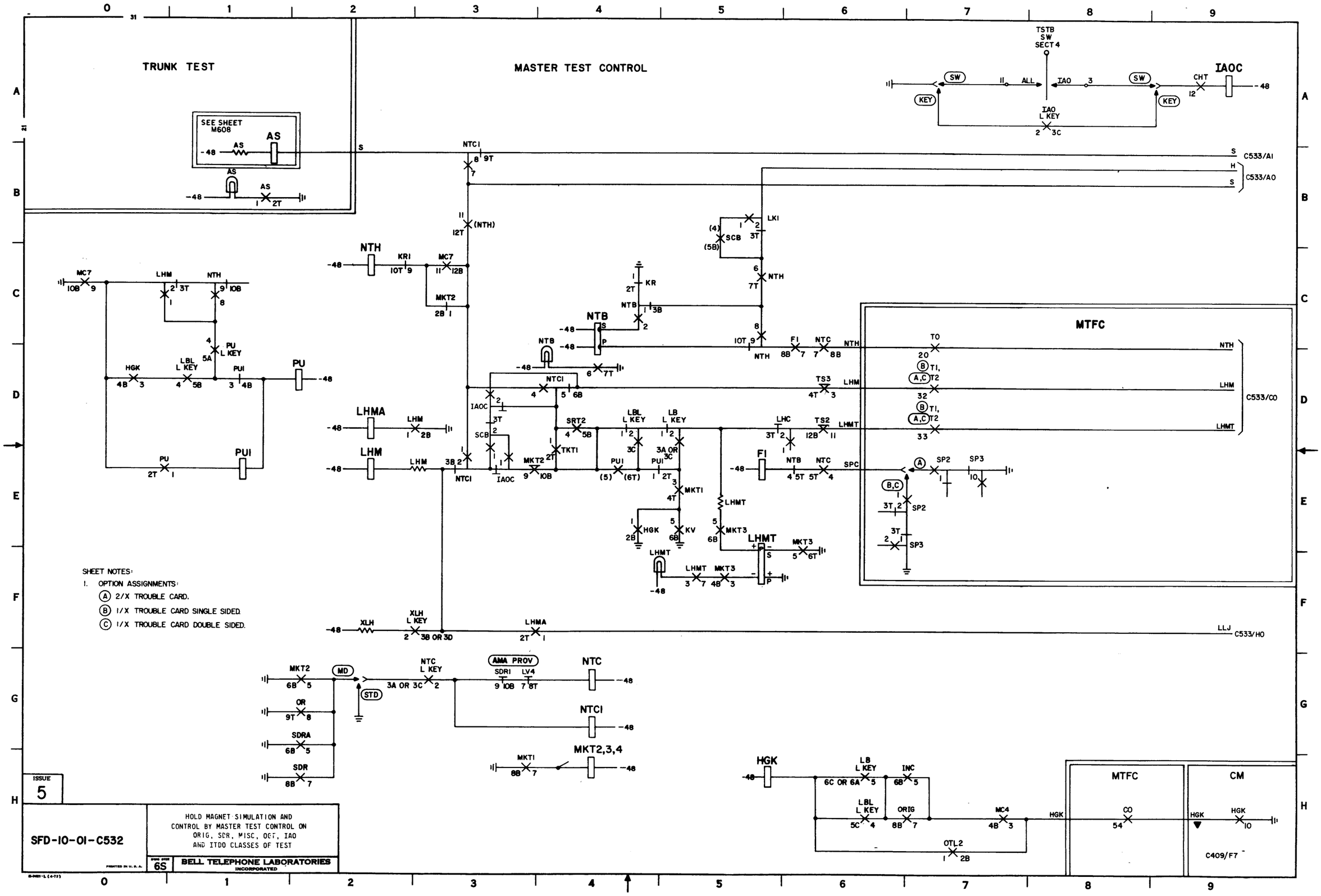

SHEET NOTES:

1. OPTION ASSIGNMENTS:
   - (A) 2/X TROUBLE CARD.
   - (B) 1/X TROUBLE CARD SINGLE SIDED.
   - (C) 1/X TROUBLE CARD DOUBLE SIDED.

SFD-10-01-C532

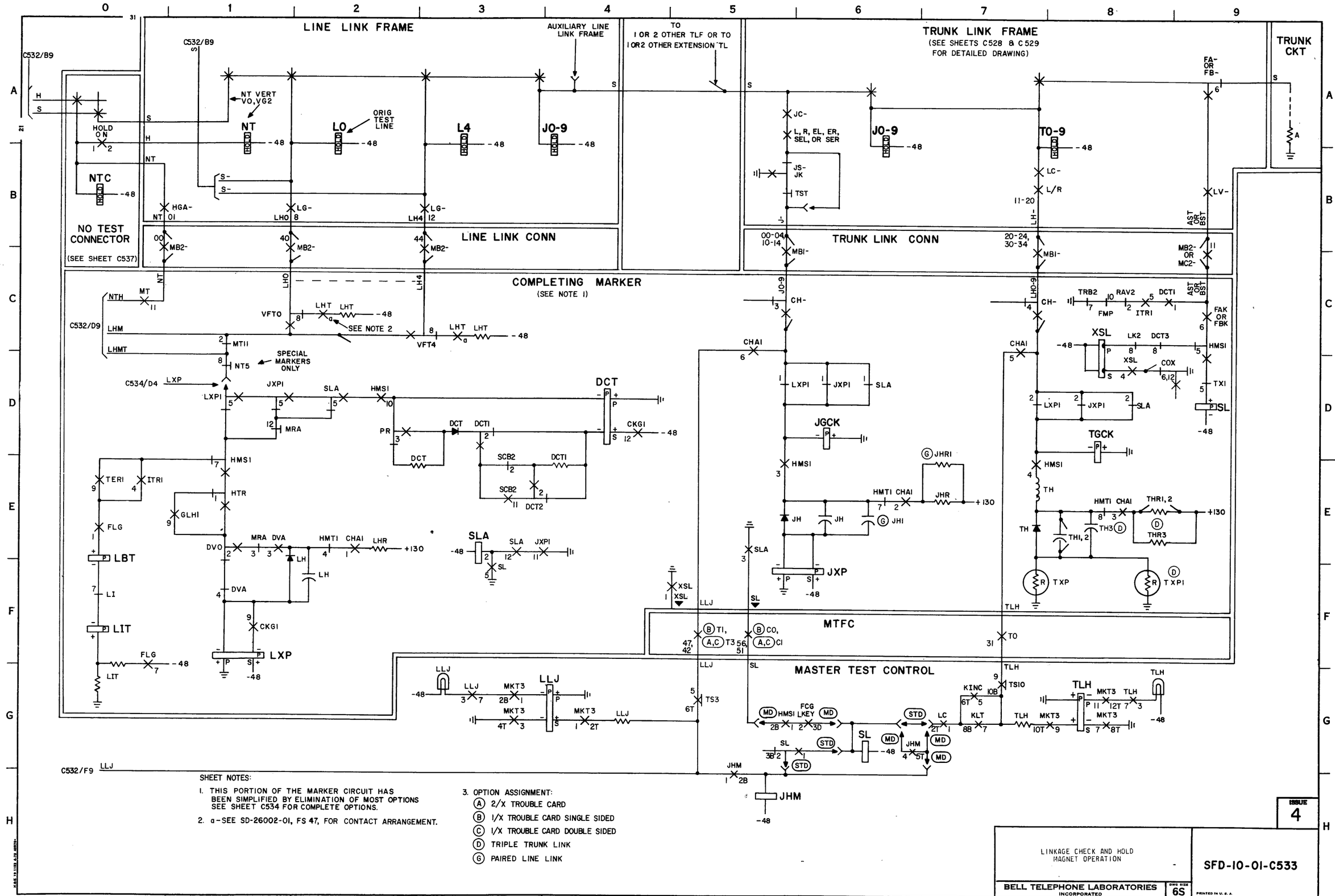

SFD-10-01-C533

COMPLETING MARKER

OPT	FEATURE
D	TRIPLE TL PROVIDED
G	PAIRED LL OPERATION
N	NO PAIRED LL & 2ND EXT. TL PROVIDED
P	NO PAIRED LL & NO 2ND EXT. TL PROVIDED
Q	PLL & NO 2ND EXT. TL PROVIDED
R	NO TRIPLE TL OPERATION
S	NO TL WITH 12 LEVEL SWITCHES
T	ALL TL WITH 12 LEVEL SWITCHES
U	ANY BUT NOT ALL TL WITH 12 LEVEL SWITCHES
V	280 TYPE POLAR RELAYS (MD)
W	316 TYPE POLAR RELAYS (STD)
X	NO PAIRED LL OPERATION
Y	PAIRED LL & 2ND EXT. TLF PROVIDED

MARKER CIRCUIT ON C533 SHOWS OPTIONS "P,R,S, & X".

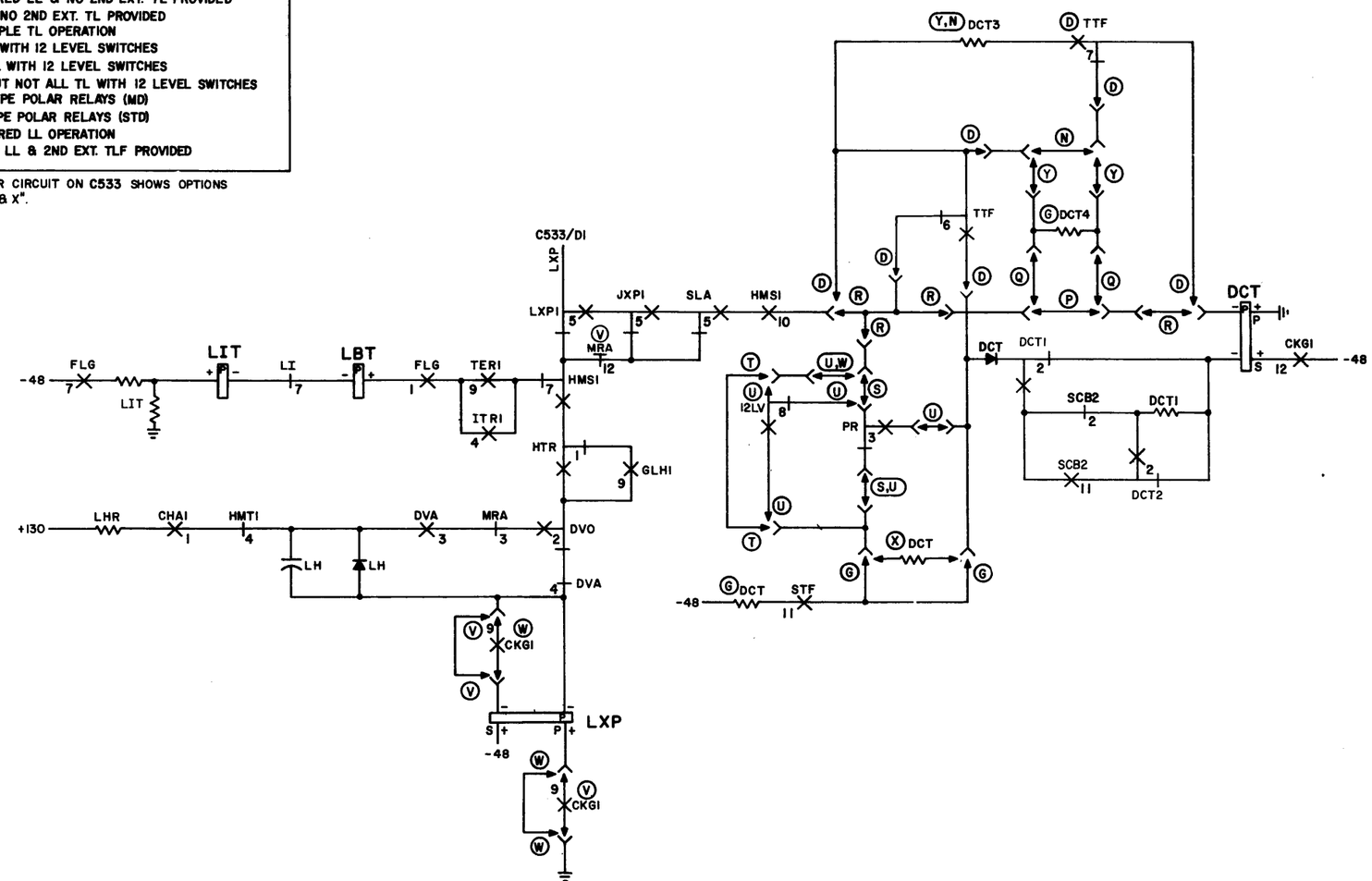

ISSUE 4

SFD-10-01-C534

OPTIONAL ARRANGEMENTS FOR HOLD MAGNET OPERATION

SIZE 6S

BELL TELEPHONE LABORATORIES INCORPORATED

PRINTED IN U.S.A.

SFD-10-01-C534

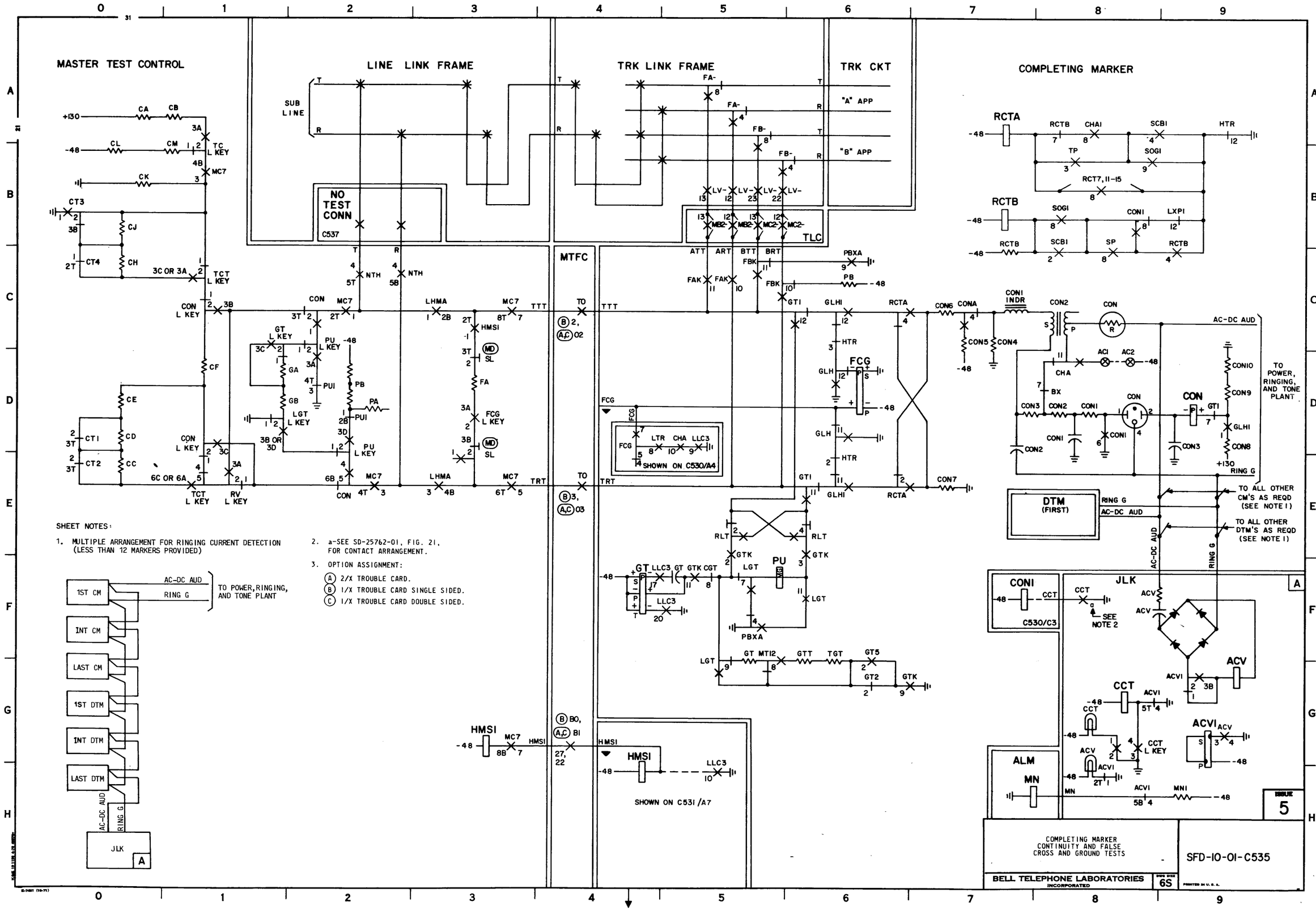

SHEET NOTES:

1. MULTIPLE ARRANGEMENT FOR RINGING CURRENT DETECTION (LESS THAN 12 MARKERS PROVIDED)
2. a-SEE SD-25762-01, FIG. 21, FOR CONTACT ARRANGEMENT.
3. OPTION ASSIGNMENT:
   - (A) 2/X TROUBLE CARD.
   - (B) 1/X TROUBLE CARD SINGLE SIDED.
   - (C) 1/X TROUBLE CARD DOUBLE SIDED.

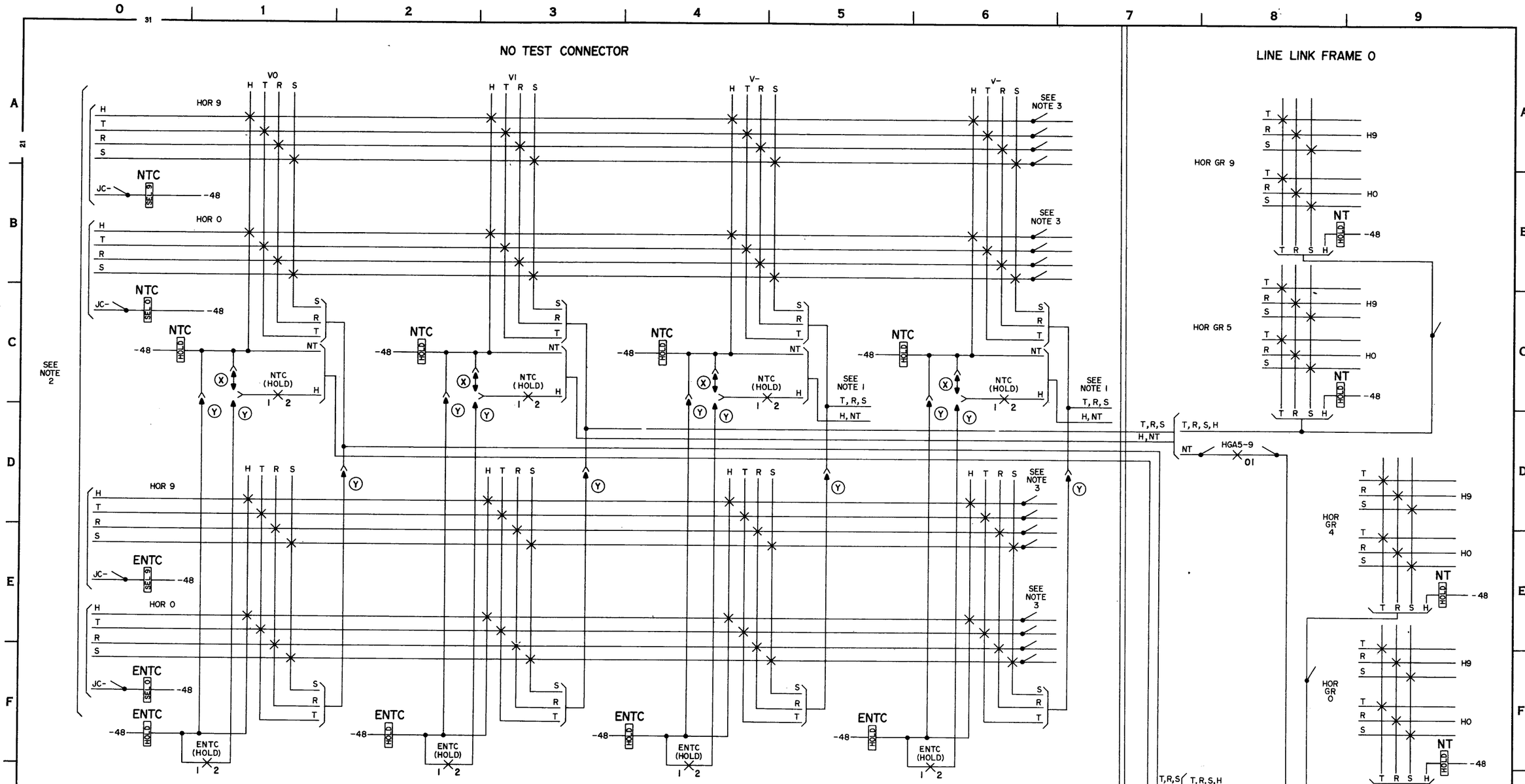

SHEET NOTES:

1. DISTRIBUTION OF (NTC) SWITCH VERTICALS TO LINE LINK FRAME. HORIZONTAL LINE GROUP NO TEST VERTICALS.

NTC SWITCH													LINE LINK NO TEST VERTICAL HORIZONTAL LINE GROUP
VERTICAL	1ST	2ND	3RD	4TH	5TH	6TH	7TH	8TH	9TH	10TH	11TH	12TH	
	LINE LINK FRAME												
00	00	05	10	15	20	25	30	35	40	45	50	55	0-4
01													5-9
02	01	06	11	16	21	26	31	36	41	46	51	56	0-4
03													5-9
04	02	07	12	17	22	27	32	37	42	47	52	57	0-4
05													5-9
06	03	08	13	18	23	28	33	38	43	48	53	58	0-4
07													5-9
08	04	09	14	19	24	29	34	39	44	49	54	59	0-4
09													5-9

WHERE MORE THAN FORTY LINE LINK FRAMES ARE REQUIRED, THE JC- LEADS SHALL BE ASSIGNED AND MULTIPLED TO OTHER SWITCHES AS FOLLOWS:

FROM JC LEAD NO.	TO SWITCH ASSOC WITH LL FRAMES	TO SWITCH ASSOC WITH LL FRAMES
0	00-04	—
1	05-09	—
2	10-14	—
3	15-19	—
4	20-24	40-44
5	25-29	45-49
6	30-34	50-54
7	35-39	55-59

2. ASSIGN LEVELS AS REQUIRED TO:
   DSA BD - NO TEST TRUNKS
   LTD - NO TEST TRUNKS
   MASTER TEST CONTROL
   LIT
   ETC.

3. MULTIPLE TO CORRESPONDING LEVELS OF OTHER NO TEST SWITCHES.
   (X) 10 OR LESS NT TRUNK APPEARANCES REQUIRED.
   (Y) MORE THAN 10 NT TRUNK APPEARANCES REQUIRED.

SFD-10-01-C537

ESTABLISHING OUTGOING TRUNK CONNECTION

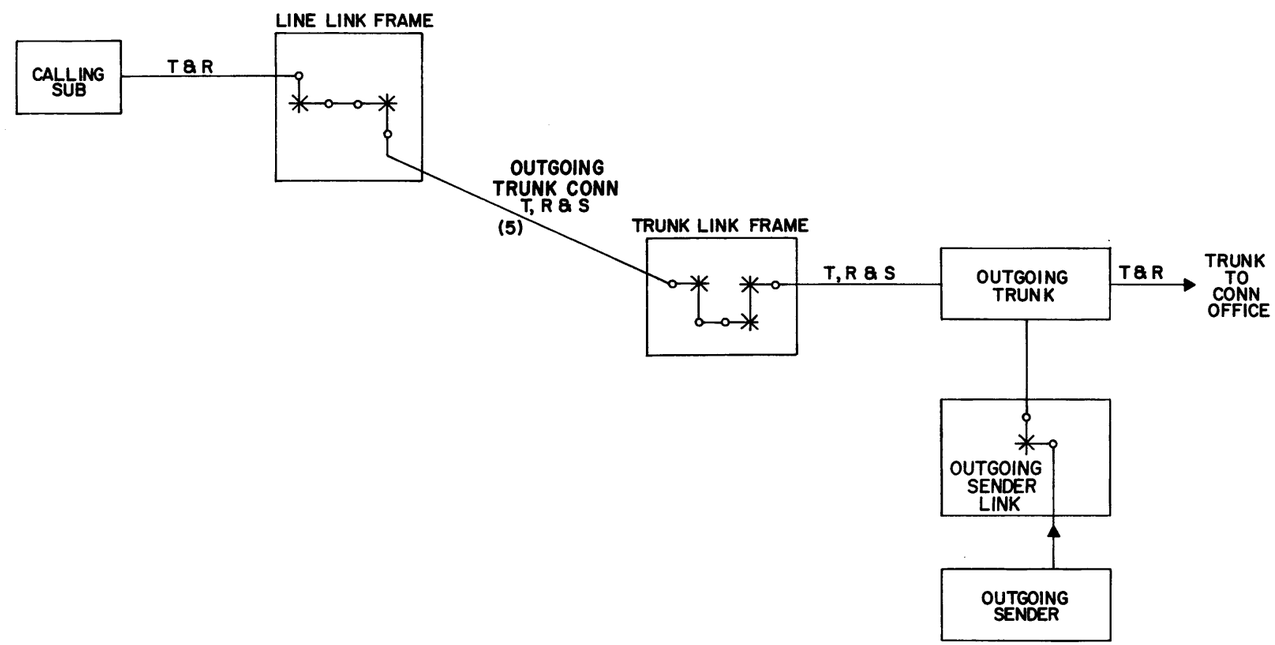

INDEX

CAUTION !

DUE TO THE SIMPLIFIED NATURE OF THIS DOCUMENT, INFORMATION SHOWN MAY NOT BE COMPLETE.

ISSUE 3

PART C6
COMPLETING MARKER RELEASE AND SENDER OPERATION

SFD-10-01-C601

BELL TELEPHONE LABORATORIES INCORPORATED

DWG SIZE 6S

PRINTED IN U. S. A.

SFD-10-01-C601

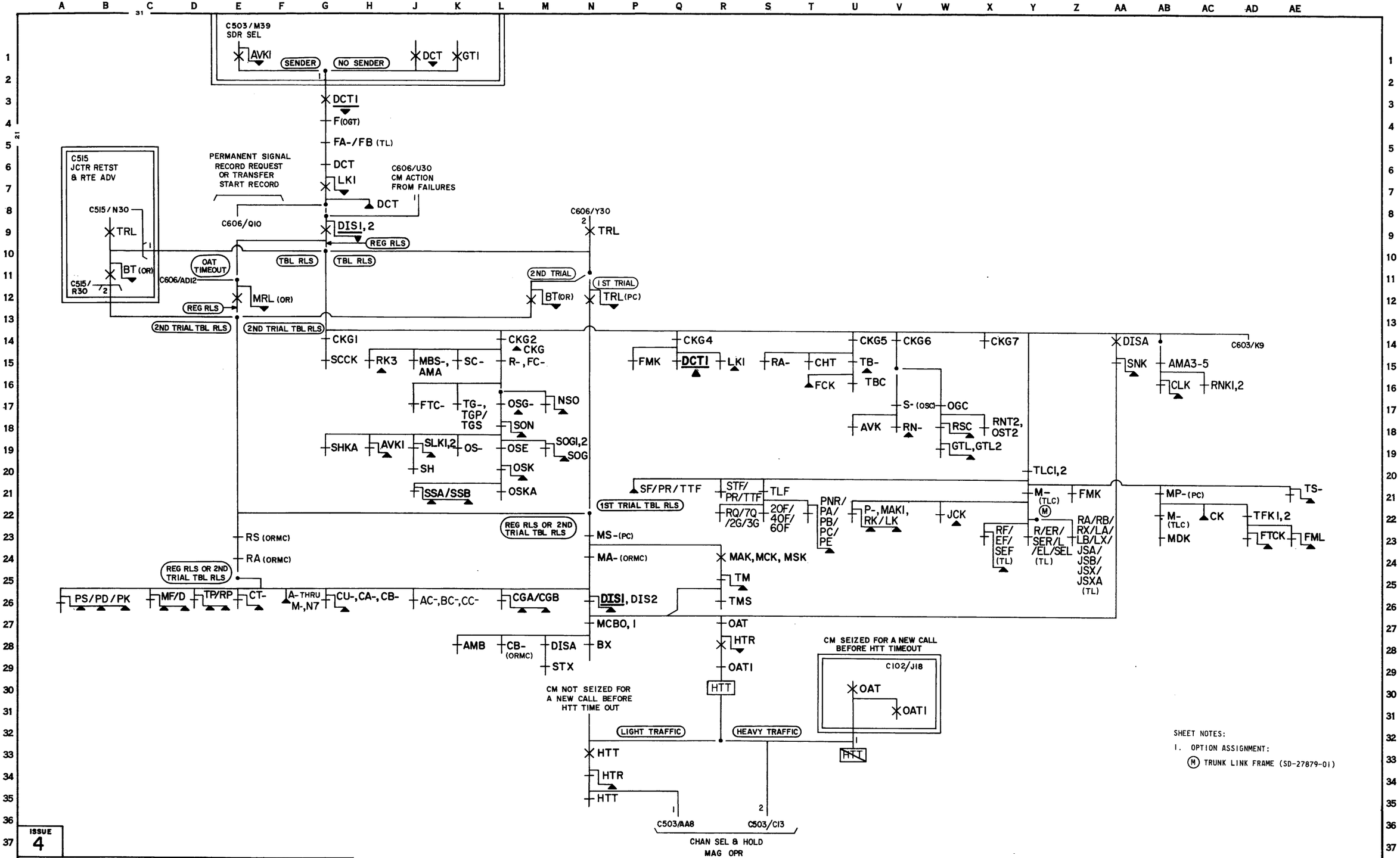

SHEET NOTES:

1. OPTION ASSIGNMENT:
   (M) TRUNK LINK FRAME (SD-27879-01)

ISSUE 4

SFD-10-01-C602

(2) SEQUENCE CHART COMPLETING MARKER RELEASE

DWG SIZE 6S

BELL TELEPHONE LABORATORIES INCORPORATED

PRINTED IN U.S.A.

SFD-10-01-C602

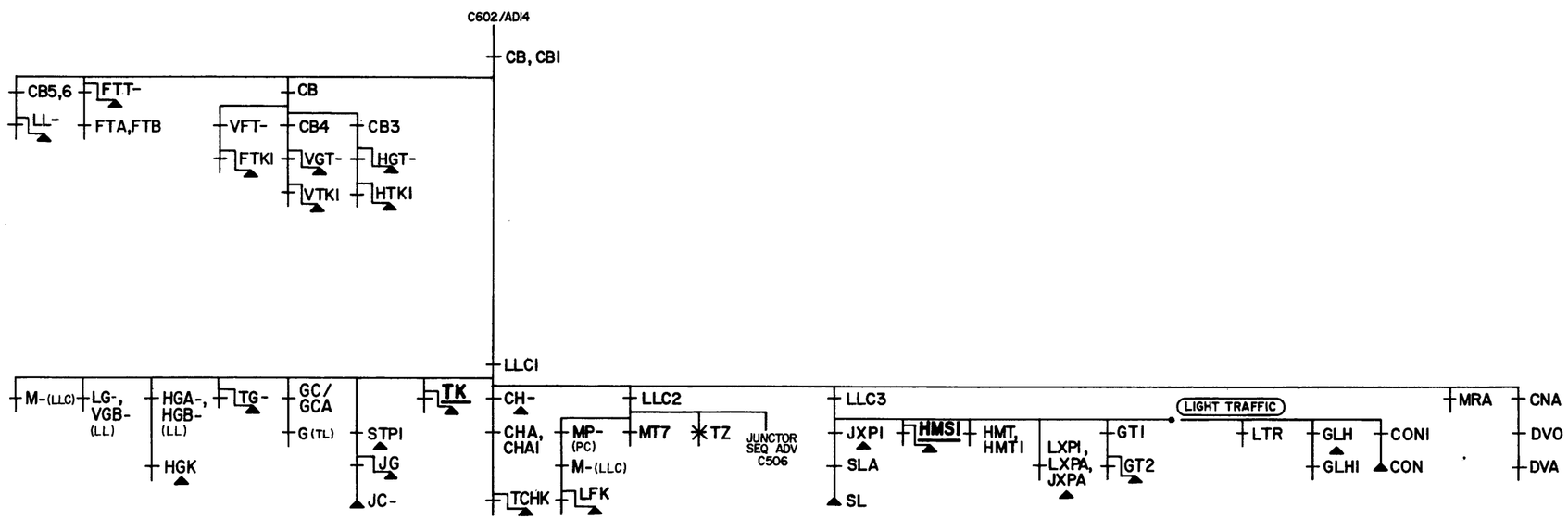

ISSUE 3

SEQUENCE CHART
COMPLETING MARKER RELEASE

SFD-10-01-C603

BELL TELEPHONE LABORATORIES INCORPORATED

DWG SIZE 6S

PRINTED IN U.S.A.

SFD-10-01-C603

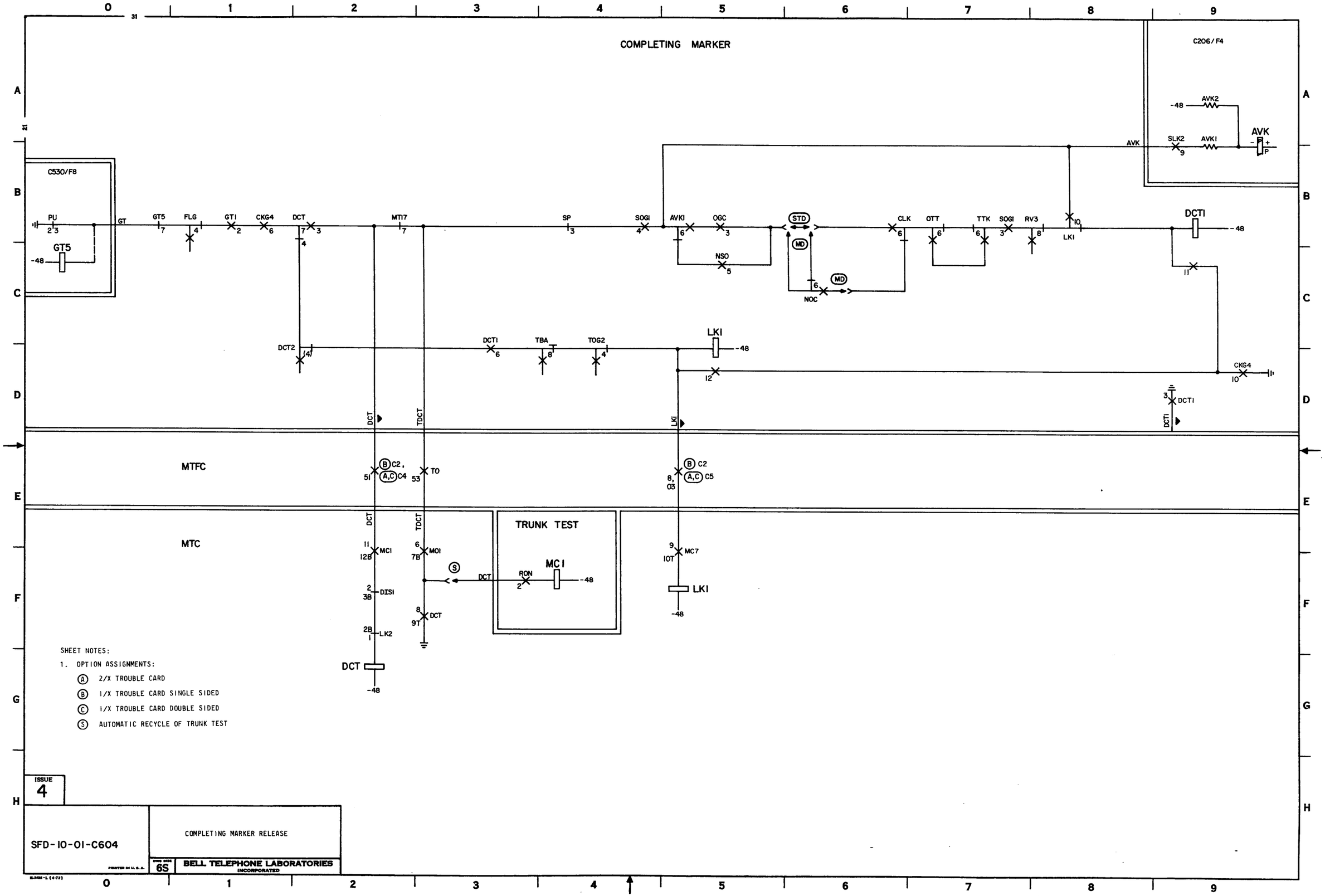

SHEET NOTES:

1. OPTION ASSIGNMENTS:
   - (A) 2/X TROUBLE CARD
   - (B) 1/X TROUBLE CARD SINGLE SIDED
   - (C) 1/X TROUBLE CARD DOUBLE SIDED
   - (S) AUTOMATIC RECYCLE OF TRUNK TEST

ISSUE 4

SFD-10-01-C604

COMPLETING MARKER RELEASE

DWG SIZE 6S

BELL TELEPHONE LABORATORIES INCORPORATED

PRINTED IN U.S.A.

E-2401-1 (4-72)

SFD-10-01-C604

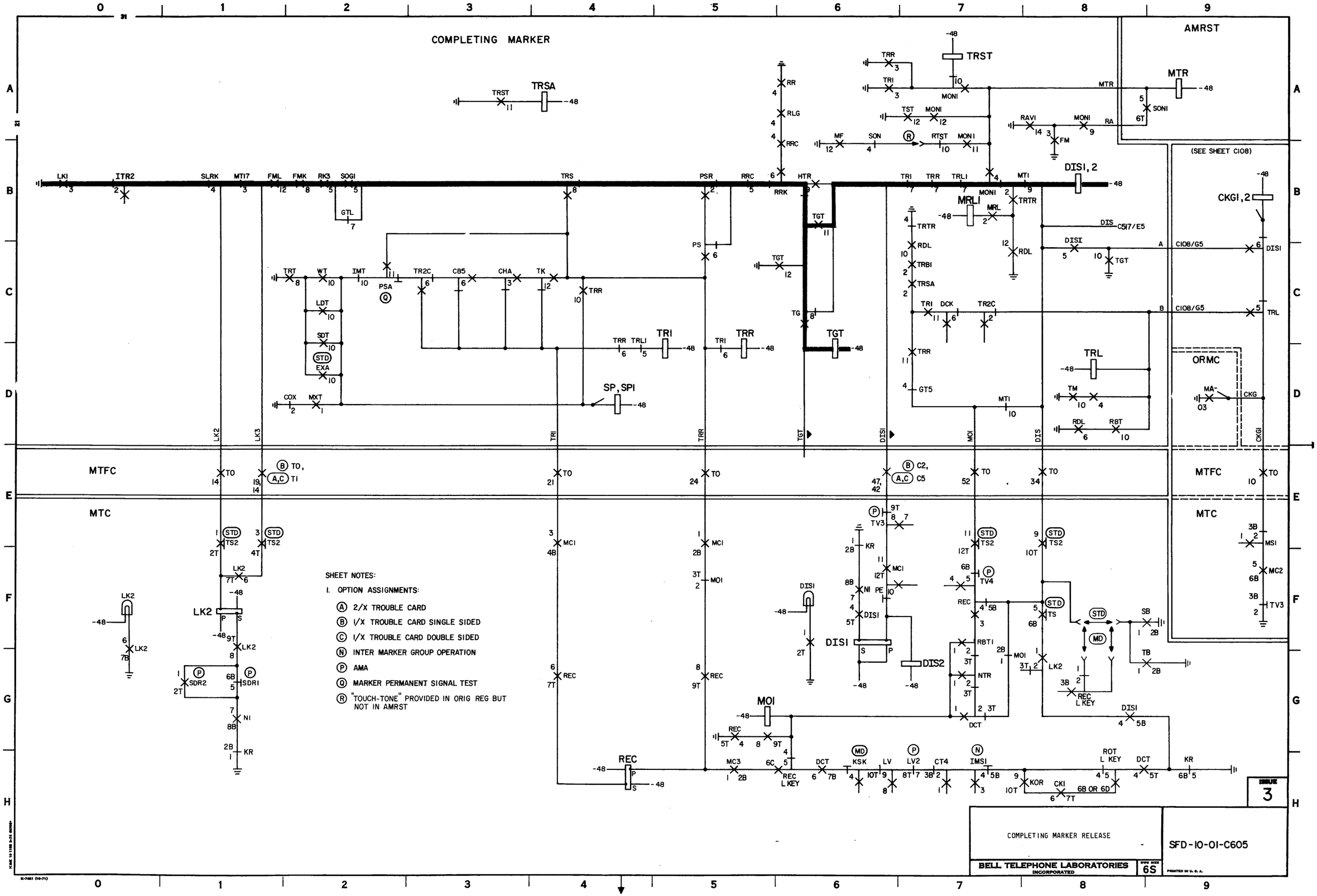
COMPLETING MARKER
AMRST
MTFC
MTC
ORMC
(SEE SHEET C108)
TRSA
TRST
MTR
DISI, 2
CKGI, 2
MRLI
TRI
TRR
TGT
SP, SPI
TRL
DISI
DIS2
MOI
REC
LK2
SDR2
SDRI
TS2
TV3
TV4
TS
MC2
MSI
SHEET NOTES:
1. OPTION ASSIGNMENTS:
(A) 2/X TROUBLE CARD
(B) 1/X TROUBLE CARD SINGLE SIDED
(C) 1/X TROUBLE CARD DOUBLE SIDED
(N) INTER MARKER GROUP OPERATION
(P) AMA
(Q) MARKER PERMANENT SIGNAL TEST
(R) "TOUCH-TONE" PROVIDED IN ORIG REG BUT NOT IN AMRST
ISSUE 3
COMPLETING MARKER RELEASE
SFD-10-01-C605
BELL TELEPHONE LABORATORIES INCORPORATED
SIZE 6S
PRINTED IN U. S. A.

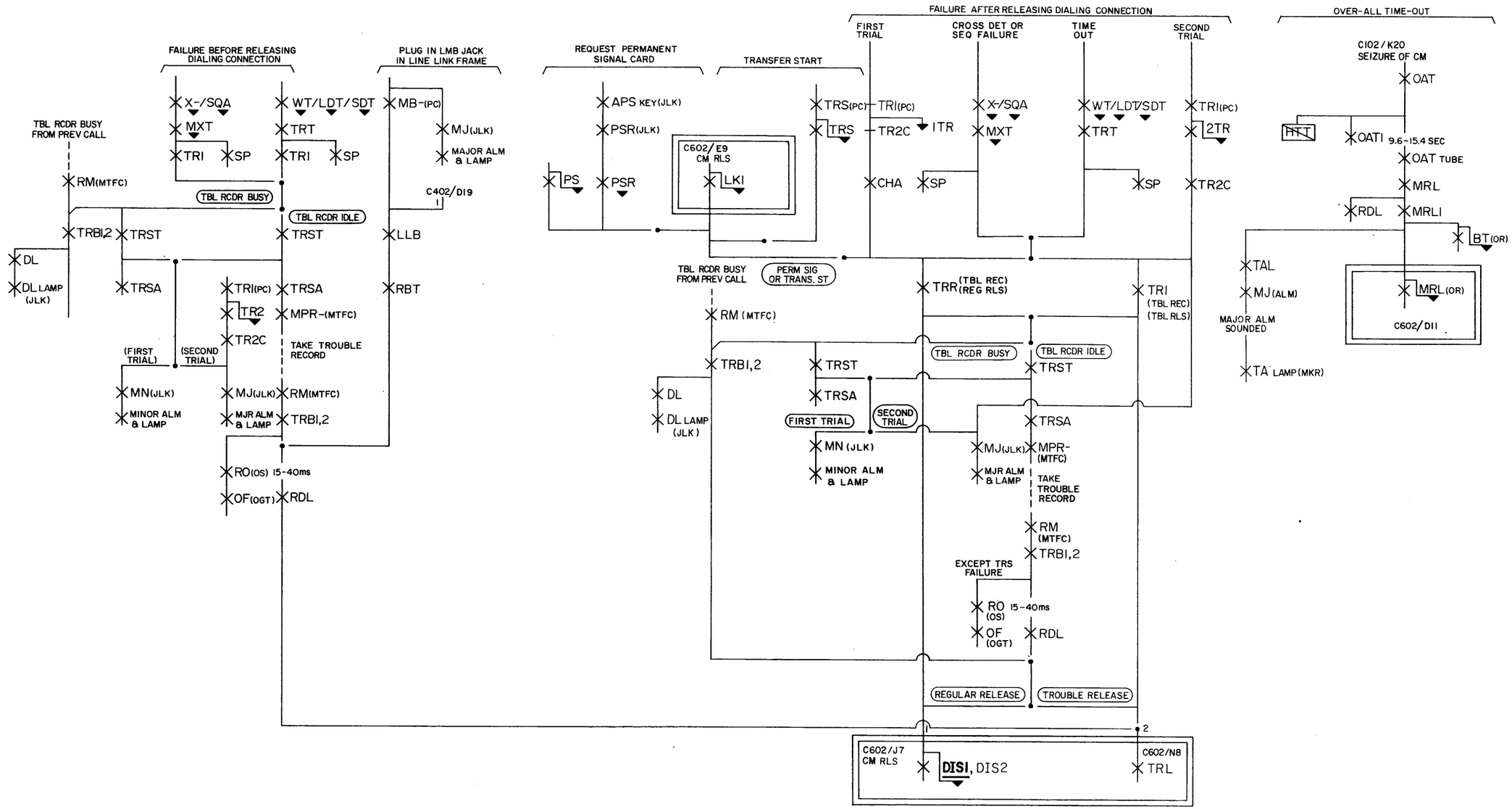

ISSUE 4

SFD-10-01-C606

SEQUENCE CHART
MARKER ACTION FROM FAILURES
(OUTGOING)

DWG SIZE 6S

BELL TELEPHONE LABORATORIES INCORPORATED

SFD-10-01-C606

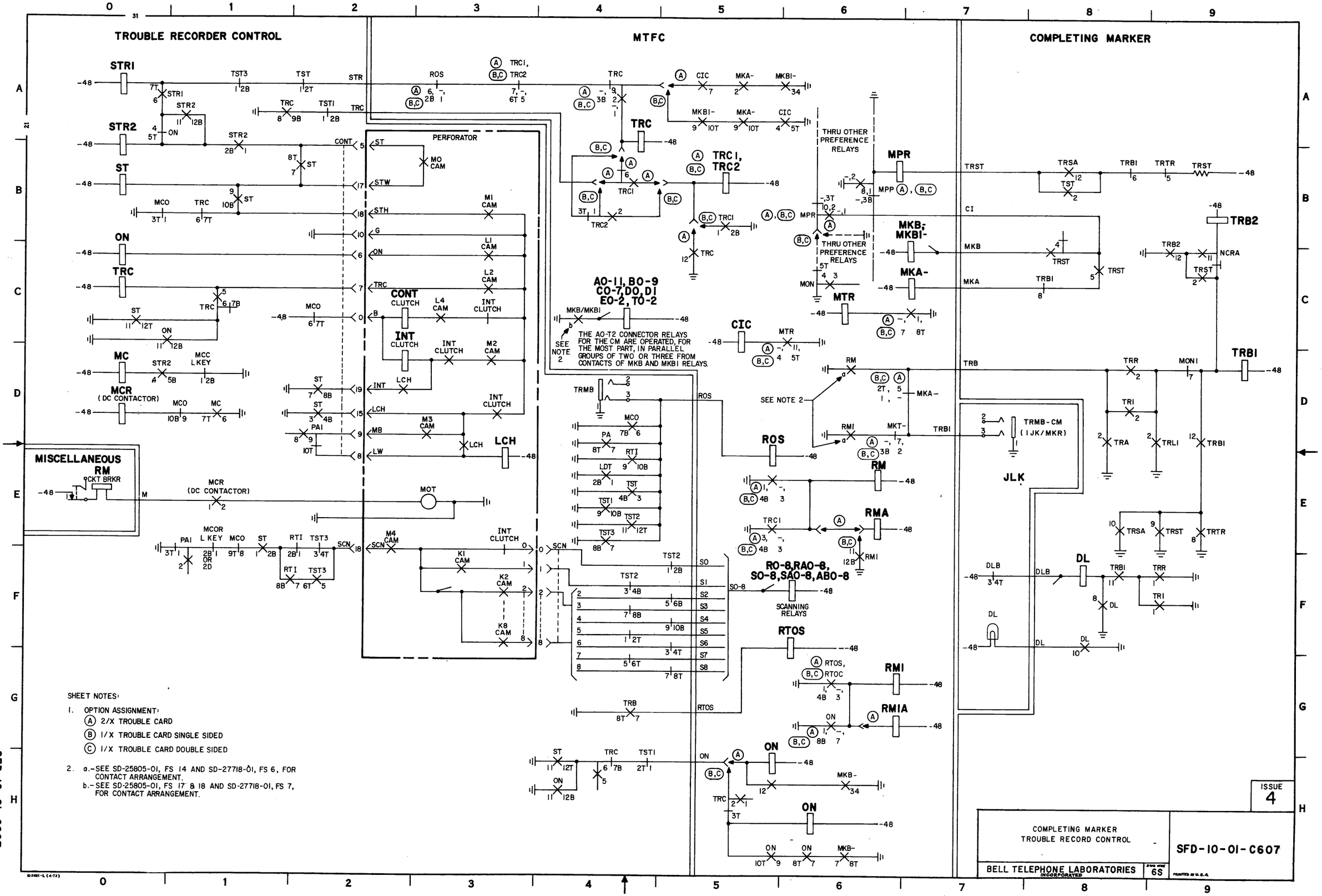
TROUBLE RECORDER CONTROL
MTFC
COMPLETING MARKER
PERFORATOR
MISCELLANEOUS RM
CKT BRKR
MCR (DC CONTACTOR)
THRU OTHER PREFERENCE RELAYS
AO-11, BO-9 CO-7, DO, DI EO-2, TO-2
THE AO-T2 CONNECTOR RELAYS FOR THE CM ARE OPERATED, FOR THE MOST PART, IN PARALLEL GROUPS OF TWO OR THREE FROM CONTACTS OF MKB AND MKBI RELAYS.
SEE NOTE 2
RO-8, RAO-8, SO-8, SAO-8, ABO-8
SCANNING RELAYS
TRMB-CM (1JK/MKR)
JLK
SHEET NOTES:
1. OPTION ASSIGNMENT:
(A) 2/X TROUBLE CARD
(B) 1/X TROUBLE CARD SINGLE SIDED
(C) 1/X TROUBLE CARD DOUBLE SIDED
2. a.-SEE SD-25805-01, FS 14 AND SD-27718-01, FS 6, FOR CONTACT ARRANGEMENT.
b.-SEE SD-25805-01, FS 17 & 18 AND SD-27718-01, FS 7, FOR CONTACT ARRANGEMENT.
ISSUE 4
COMPLETING MARKER TROUBLE RECORD CONTROL
SFD-10-01-C607
BELL TELEPHONE LABORATORIES INCORPORATED
6S
SFD-10-01-C607

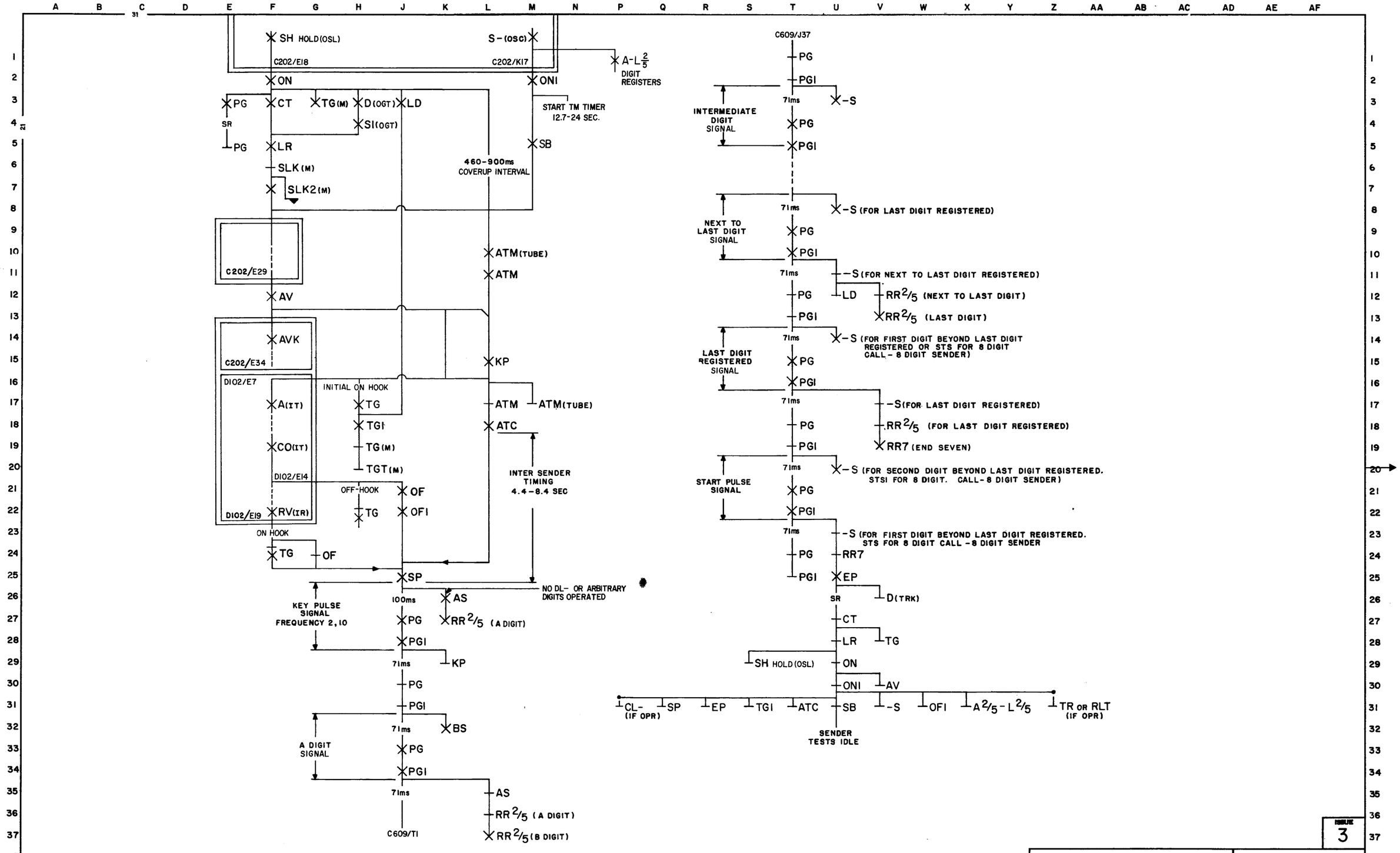

SEQUENCE CHART
REGULAR CALL MF OUTGOING SENDER

SFD-10-01-C609

BELL TELEPHONE LABORATORIES INCORPORATED

6S

3

SFD-10-01-C609

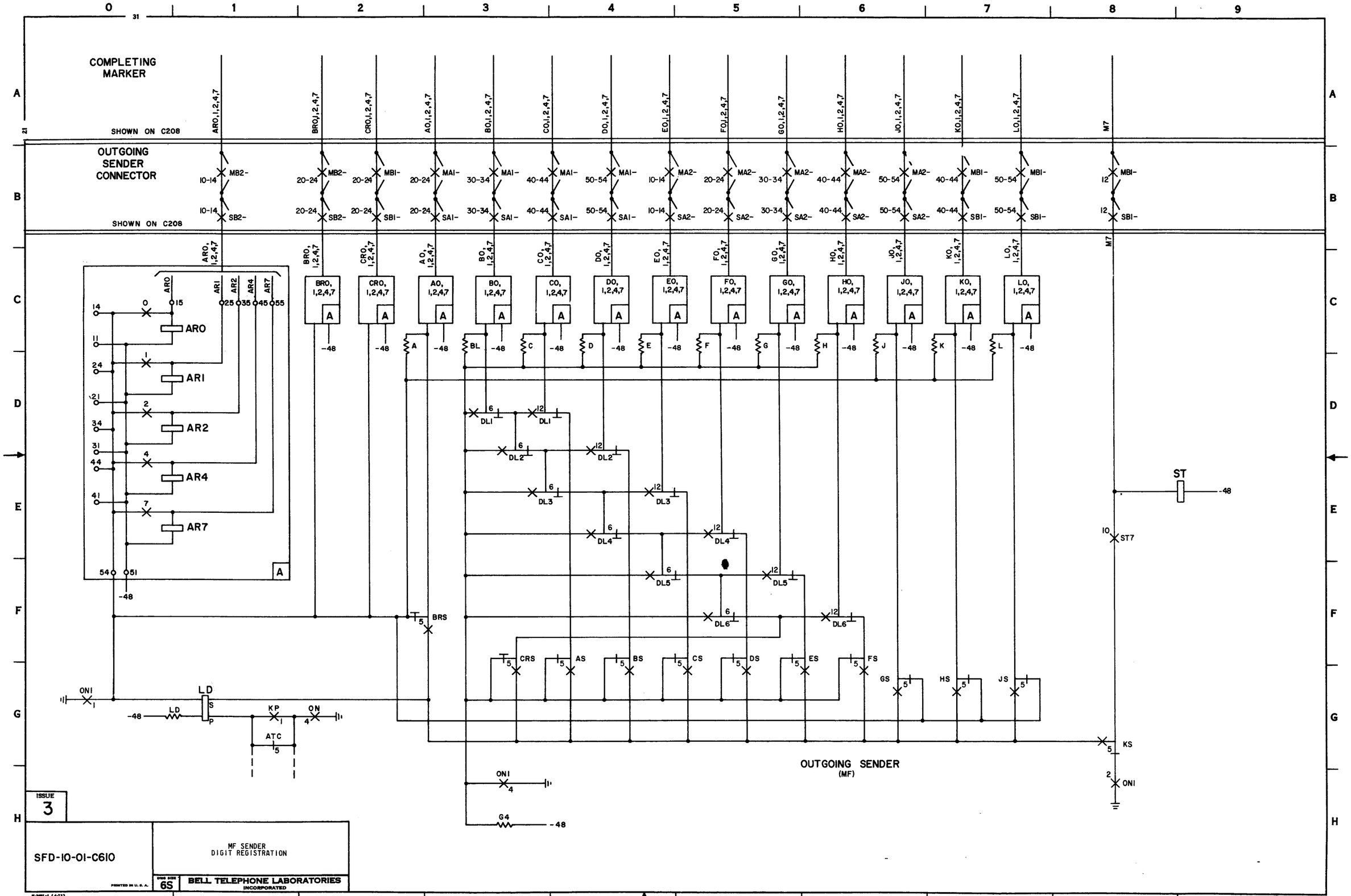
COMPLETING MARKER
SHOWN ON C208
OUTGOING SENDER CONNECTOR
SHOWN ON C208
ARO,1,2,4,7
BRO,1,2,4,7
CRO,1,2,4,7
AO,1,2,4,7
BO,1,2,4,7
CO,1,2,4,7
DO,1,2,4,7
EO,1,2,4,7
FO,1,2,4,7
GO,1,2,4,7
HO,1,2,4,7
JO,1,2,4,7
KO,1,2,4,7
LO,1,2,4,7
M7
MB2-
SB2-
MBI-
SBI-
MAI-
SAI-
MA2-
SA2-
ARO
ARI
AR2
AR4
AR7
A
-48
DLI
DL2
DL3
DL4
DL5
DL6
BRS
CRS
AS
BS
CS
DS
ES
FS
GS
HS
JS
ST
ST7
KS
ONI
LD
KP
ON
ATC
G4
OUTGOING SENDER
(MF)
ISSUE
3
SFD-10-01-C610
MF SENDER
DIGIT REGISTRATION
DWG SIZE
6S
BELL TELEPHONE LABORATORIES
INCORPORATED
PRINTED IN U.S.A.
SFD-10-01-C610

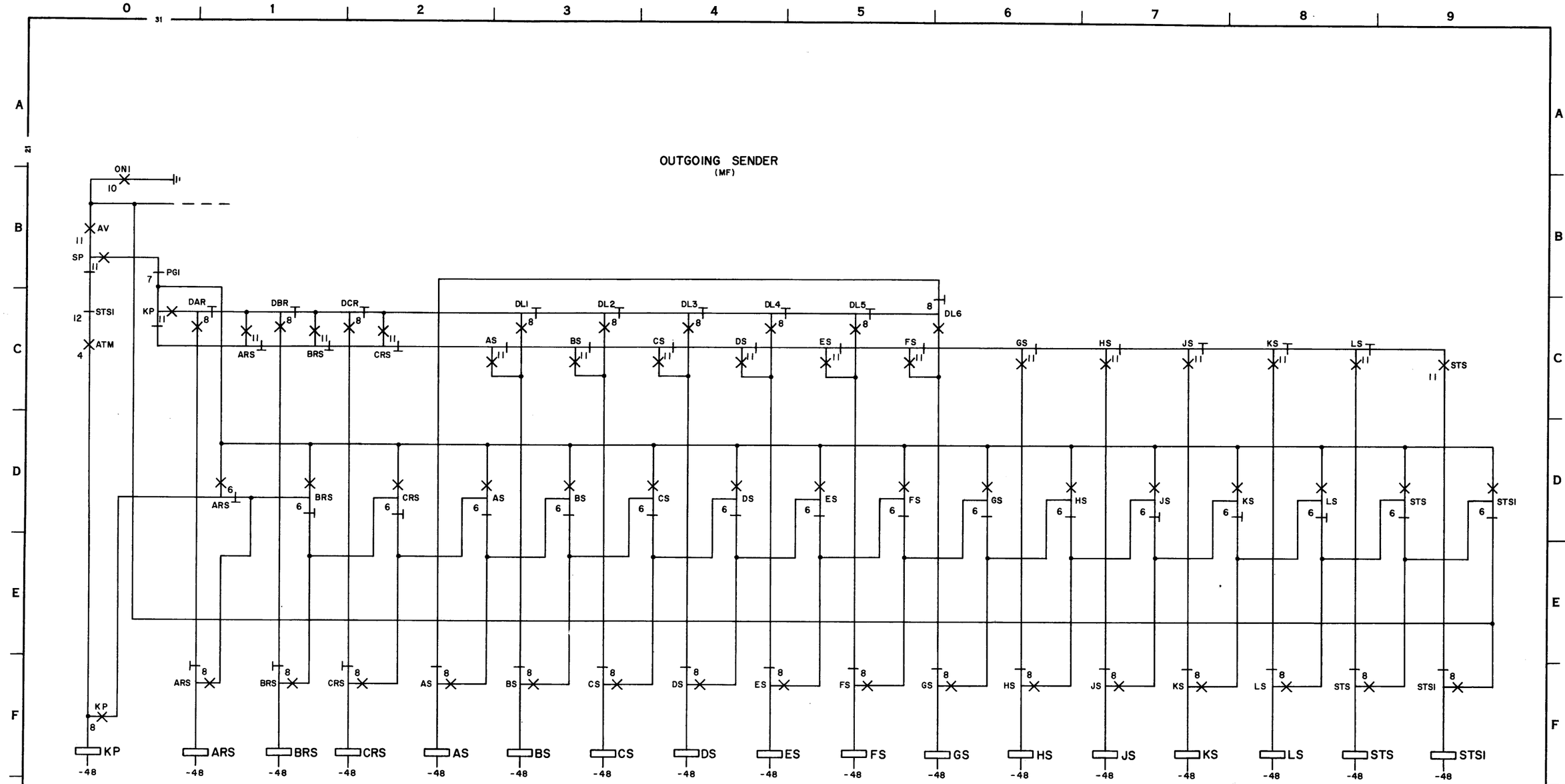

ISSUE 3

MF SENDER - DIGIT STEERING FOR OUTPULSING

SFD-10-01-C611

BELL TELEPHONE LABORATORIES INCORPORATED

DWG SIZE 6S

PRINTED IN U.S.A.

SFD-10-01-C611

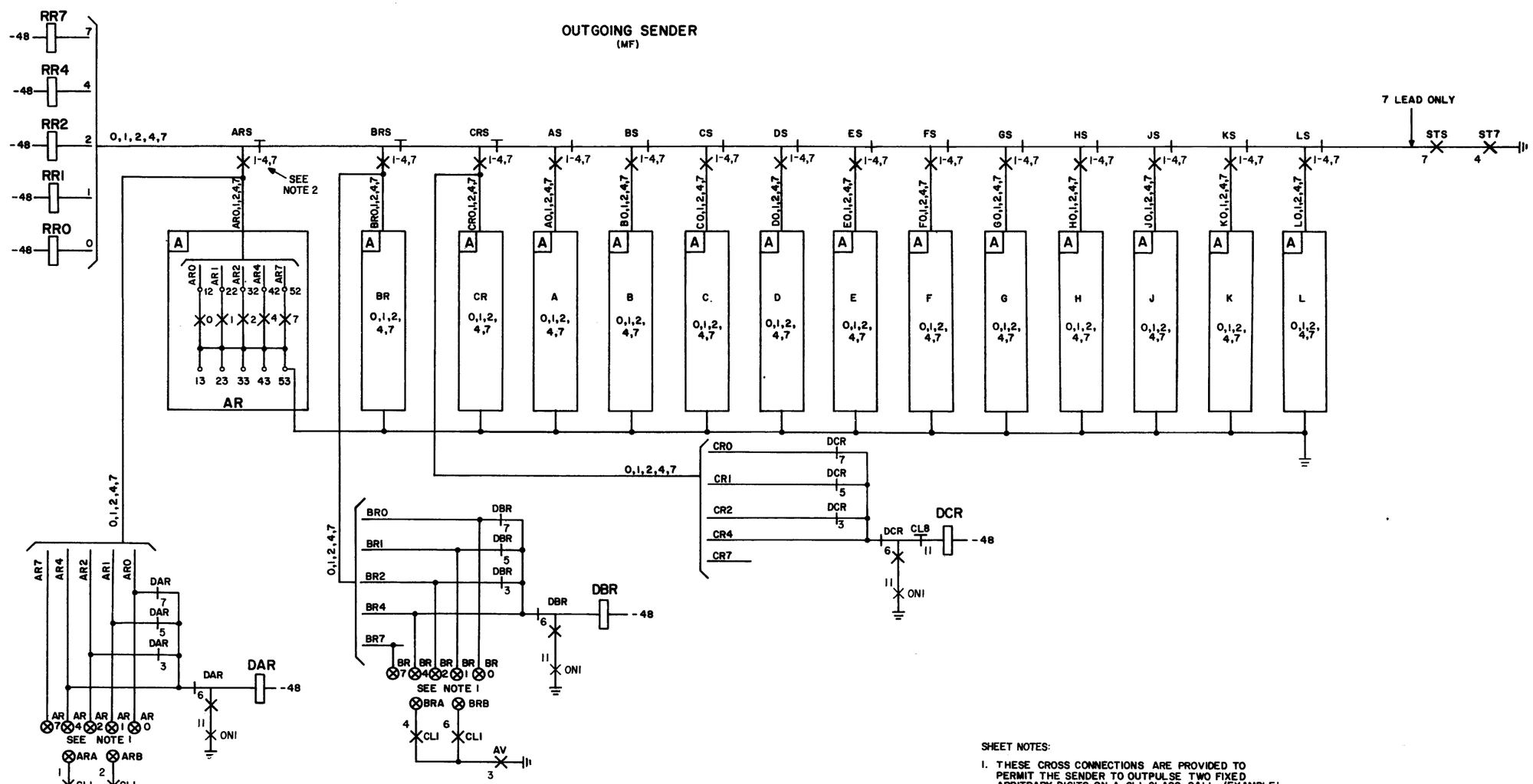

SHEET NOTES:

1. THESE CROSS CONNECTIONS ARE PROVIDED TO PERMIT THE SENDER TO OUTPULSE TWO FIXED ARBITRARY DIGITS ON A CLI CLASS CALL. (EXAMPLE: PREFIX 01 OR 11), AND THEY MAY ALSO BE USED AS THE FIXED FIRST TWO DIGITS OF AN XXX CODE WITH THE CR- DIGIT REGISTER AS THE THIRD DIGIT.
2. CONTACTS 1-4,7 CORRESPOND TO LEADS 0,1,2,4,7 RESPECTIVELY.

ISSUE 3

SFD-10-01-C612

MF SENDER
DIGIT REGISTER OUTPUT

PRINTED IN U.S.A.

PAPER SIZE 6S

BELL TELEPHONE LABORATORIES
INCORPORATED

SFD-10-01-C612

OUTGOING SENDER
(MF)

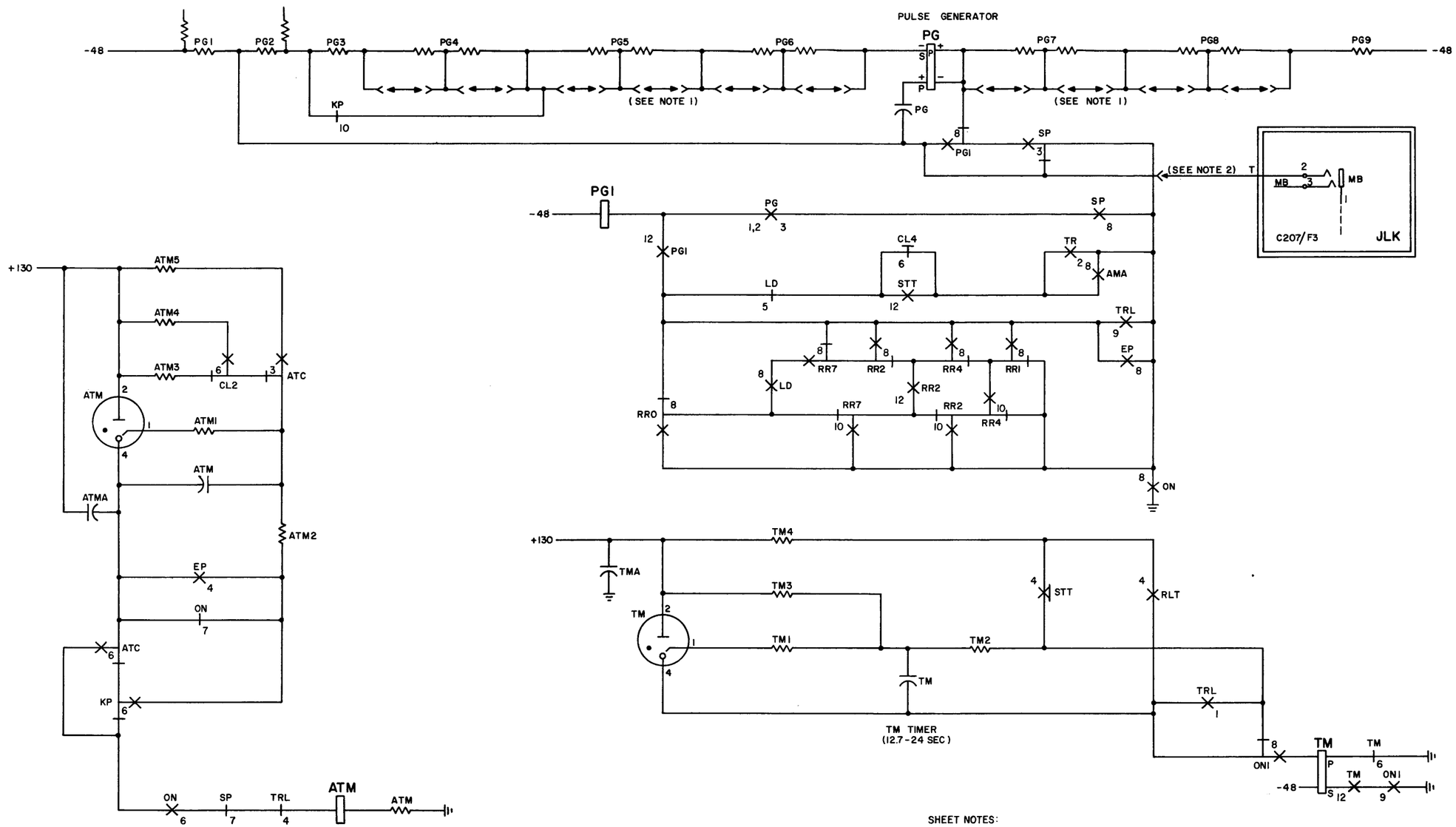

SHEET NOTES:

1. STRAP AS REQUIRED TO MEET PG TIMING REQUIRMENTS
2. T LEAD TO MB JACK IS USED BY THE SENDER TEST SET CKT, IF PROVIDED, TO CONTROL OUTPULSING OF DIGITS BY THE SENDER.

ISSUE 3

MF SENDER
PULSE GENERATOR AND TIMING

SFD-10-01-C613

BELL TELEPHONE LABORATORIES
INCORPORATED

DWG SIZE 6S

PRINTED IN U. S. A.

SFD-10-01-C613

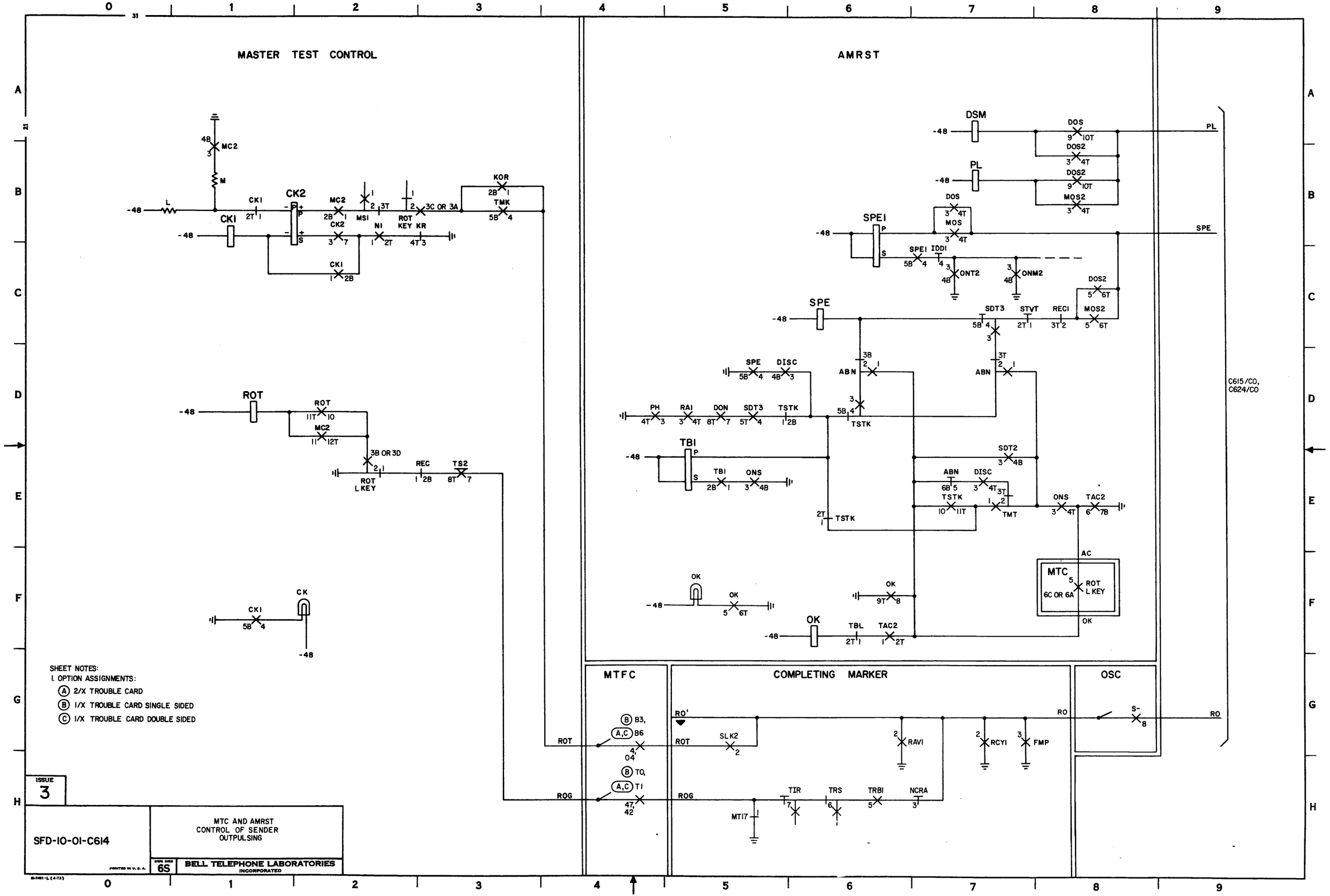
MASTER TEST CONTROL
AMRST
MTFC
COMPLETING MARKER
OSC
MC2
M
L
-48
CKI
CK2
MC2
MSI
NI
ROT KEY KR
3C OR 3A
KOR
TMK
ROT
MC2
3B OR 3D
ROT L KEY
REC
TS2
CK
DSM
PL
DOS
DOS2
MOS2
SPEI
MOS
IDDI
ONT2
ONM2
SPE
SDT3
STVT
RECI
ABN
DISC
PH
RAI
DON
TSTK
TBI
ONS
SDT2
TMT
TAC2
OK
TBL
MTC
AC
6C OR 6A
C615/CO, C624/CO
B3,
B6
T0,
T1
ROT
ROG
RO'
SLK2
RAVI
RCYI
FMP
TIR
TRS
TRBI
NCRA
MTI7
RO
S-
SHEET NOTES:
1. OPTION ASSIGNMENTS:
(A) 2/X TROUBLE CARD
(B) 1/X TROUBLE CARD SINGLE SIDED
(C) 1/X TROUBLE CARD DOUBLE SIDED
ISSUE 3
SFD-10-01-C614
MTC AND AMRST CONTROL OF SENDER OUTPULSING
6S
BELL TELEPHONE LABORATORIES INCORPORATED
PRINTED IN U.S.A.
SFD-10-01-C614

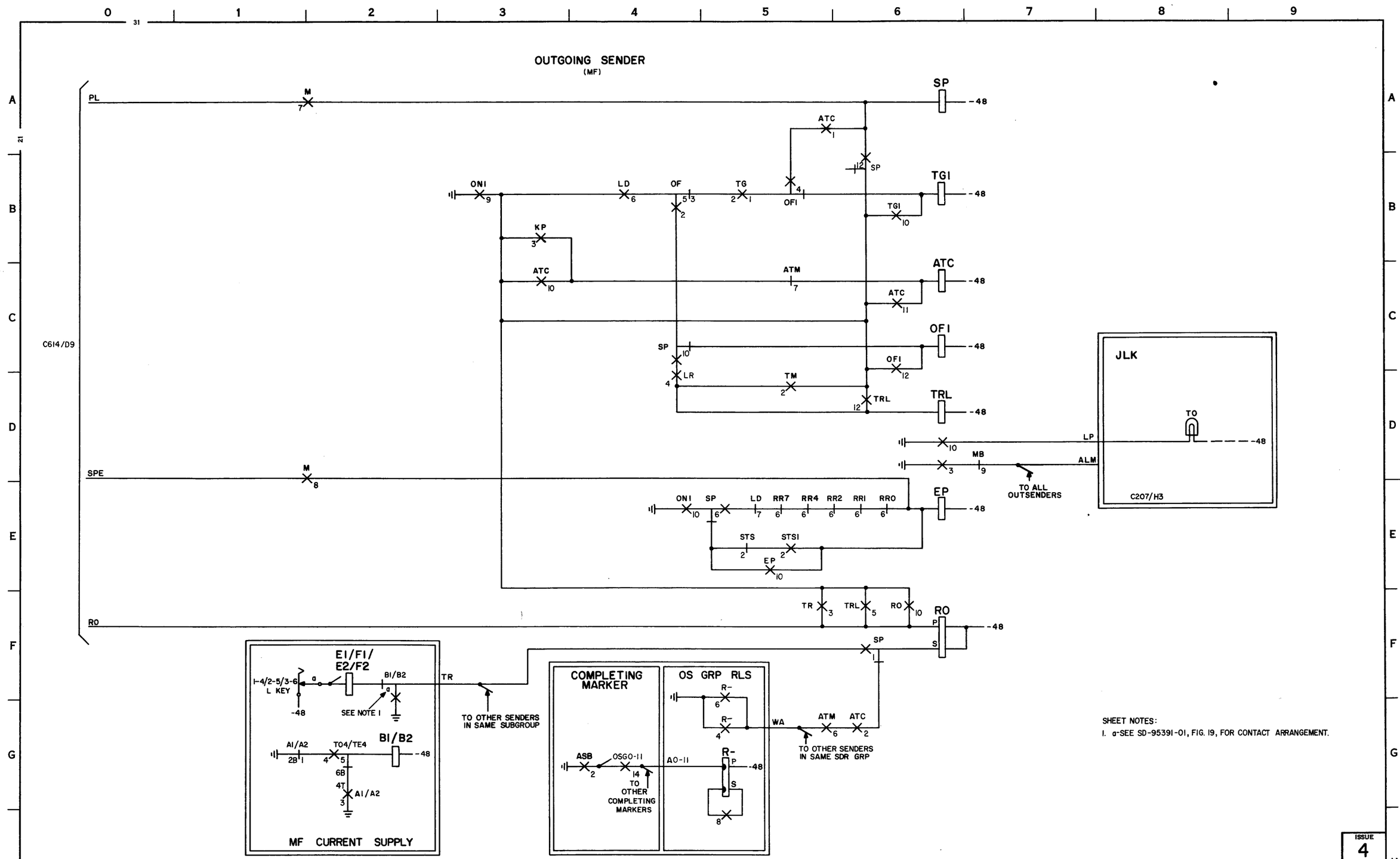

SHEET NOTES:

1. a-SEE SD-95391-01, FIG. 19, FOR CONTACT ARRANGEMENT.

ISSUE 4

SUPERVISORY CONTROL
MF OUTGOING SENDER

SFD-10-01-C615

BELL TELEPHONE LABORATORIES
INCORPORATED

DWG SIZE 6S

PRINTED IN U. S. A.

SFD-10-01-C615

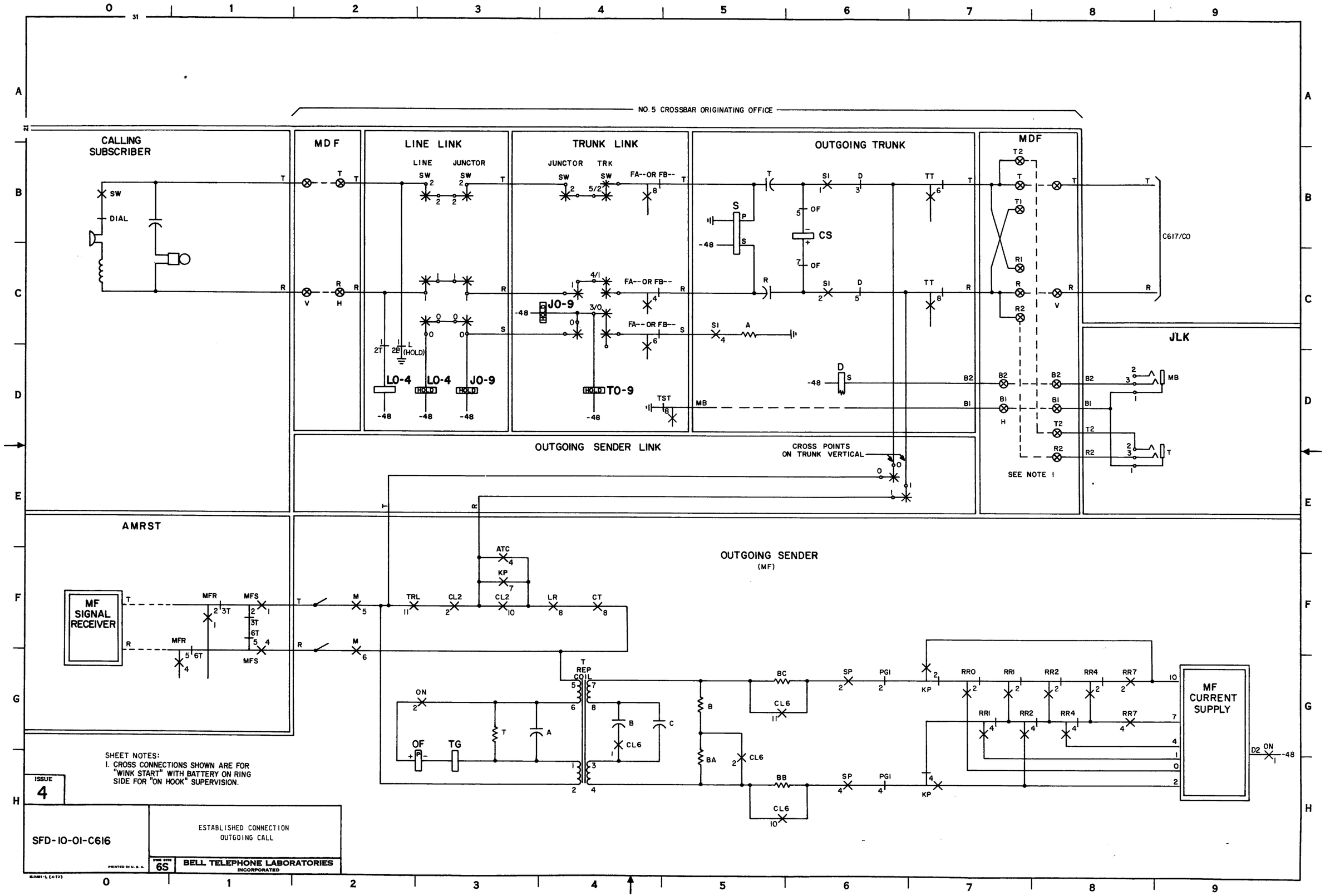

SHEET NOTES:
1. CROSS CONNECTIONS SHOWN ARE FOR "WINK START" WITH BATTERY ON RING SIDE FOR "ON HOOK" SUPERVISION.

ISSUE 4

SFD-10-01-C616

ESTABLISHED CONNECTION
OUTGOING CALL

DWG SITE 6S

BELL TELEPHONE LABORATORIES INCORPORATED

PRINTED IN U. S. A.

SFD-10-01-C616

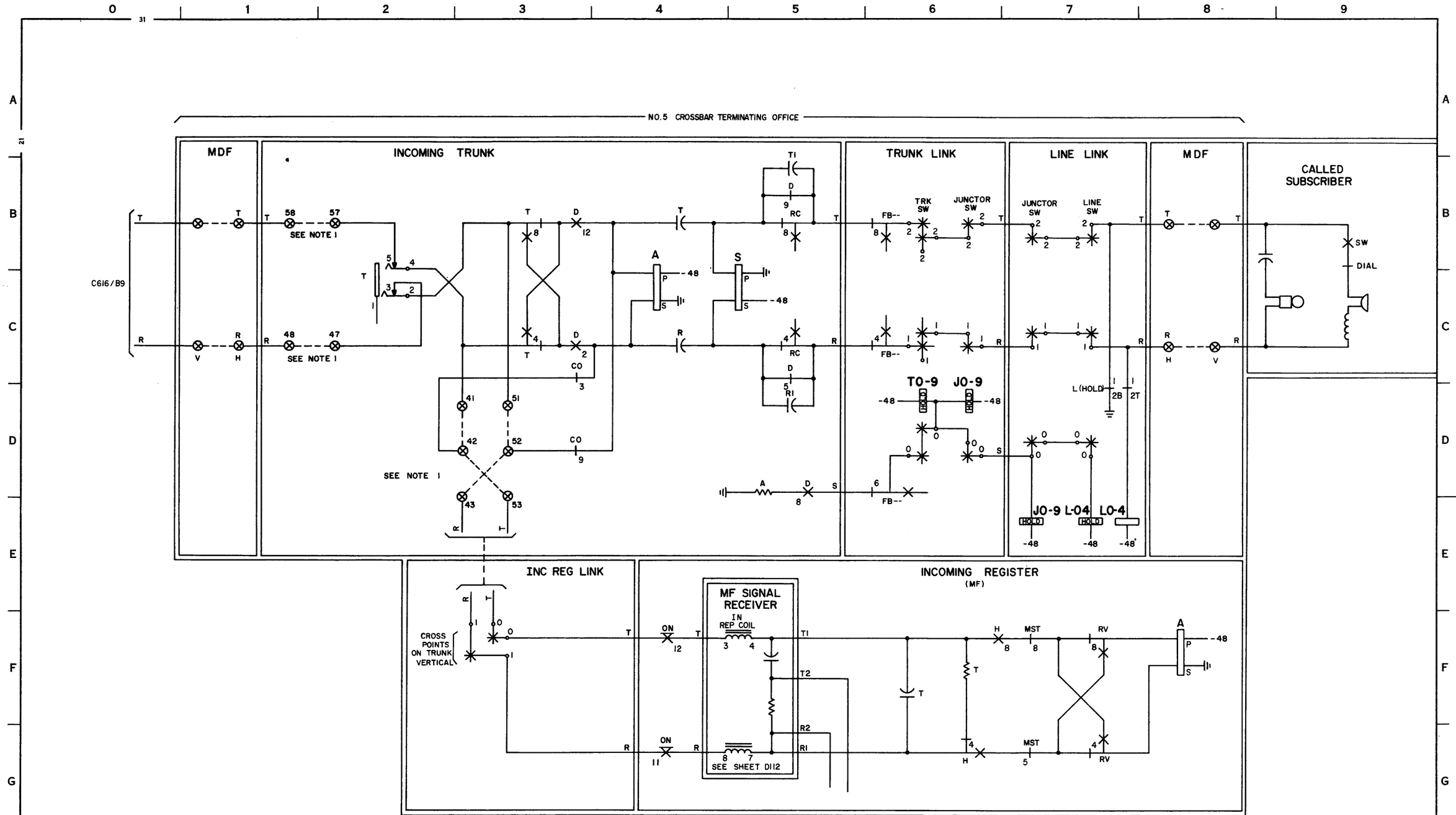

SHEET NOTES:

1. CROSS CONNECTIONS SHOWN ARE FOR "WINK START" WITH BATTERY ON RING SIDE FOR "ON HOOK" SUPERVISION. FOR COMPLETE CROSS CONN INFORMATION REFER TO SD-26070-01.

ISSUE 4

ESTABLISHED CONNECTION INCOMING CALL

SFD-10-01-C617

BELL TELEPHONE LABORATORIES INCORPORATED

DWG SIZE 6S

PRINTED IN U.S.A.

SFD-10-01-C617

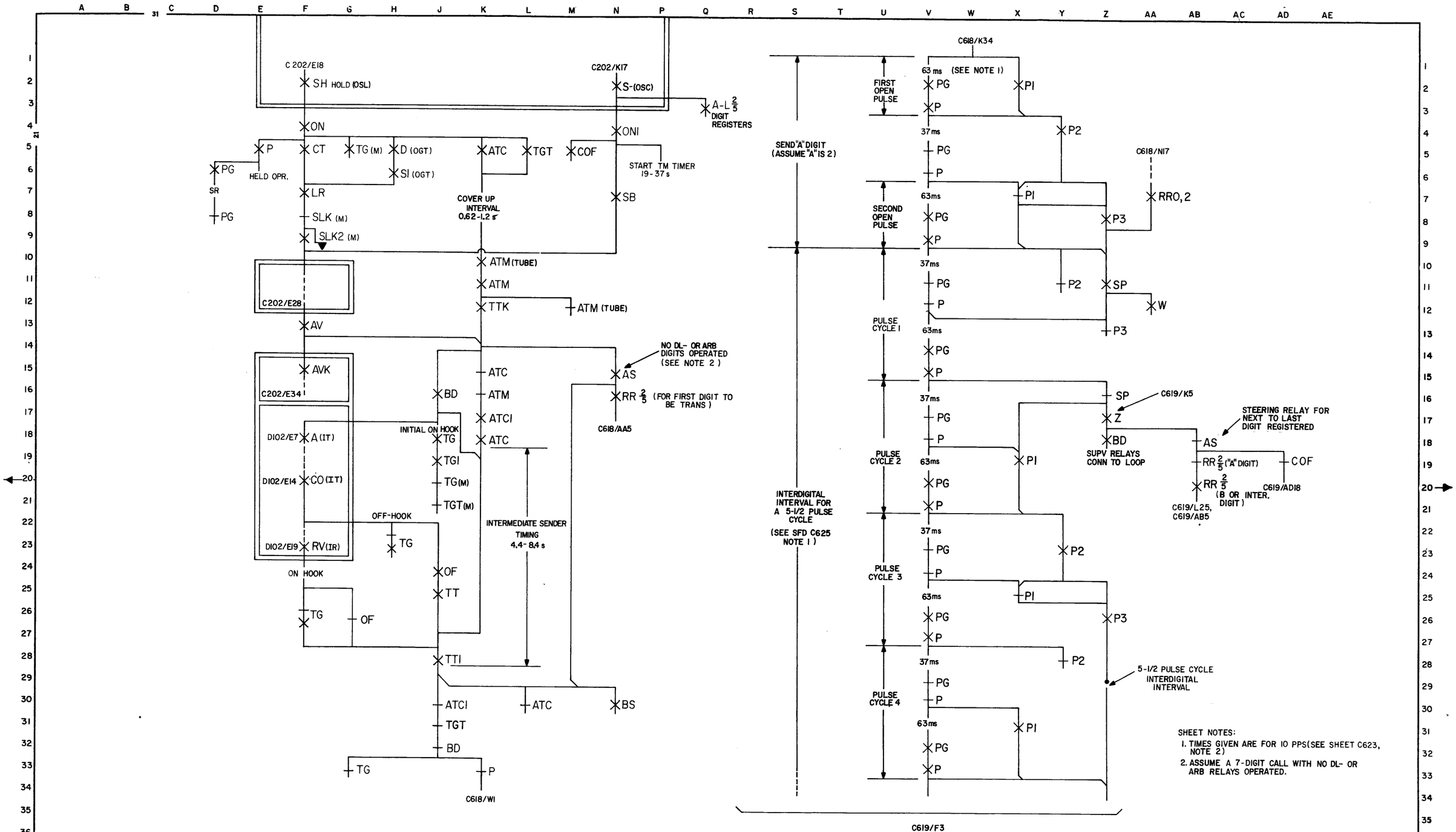

SHEET NOTES:

1. TIMES GIVEN ARE FOR 10 PPS (SEE SHEET C623, NOTE 2)
2. ASSUME A 7-DIGIT CALL WITH NO DL- OR ARB RELAYS OPERATED.

ISSUE 3

SFD-10-01-C618

SEQUENCE CHART
REGULAR CALL DP SENDER

DWG SIZE 6S

BELL TELEPHONE LABORATORIES INCORPORATED

PRINTED IN U.S.A.

E-2421-L (4-72)

SFD-10-01-C618

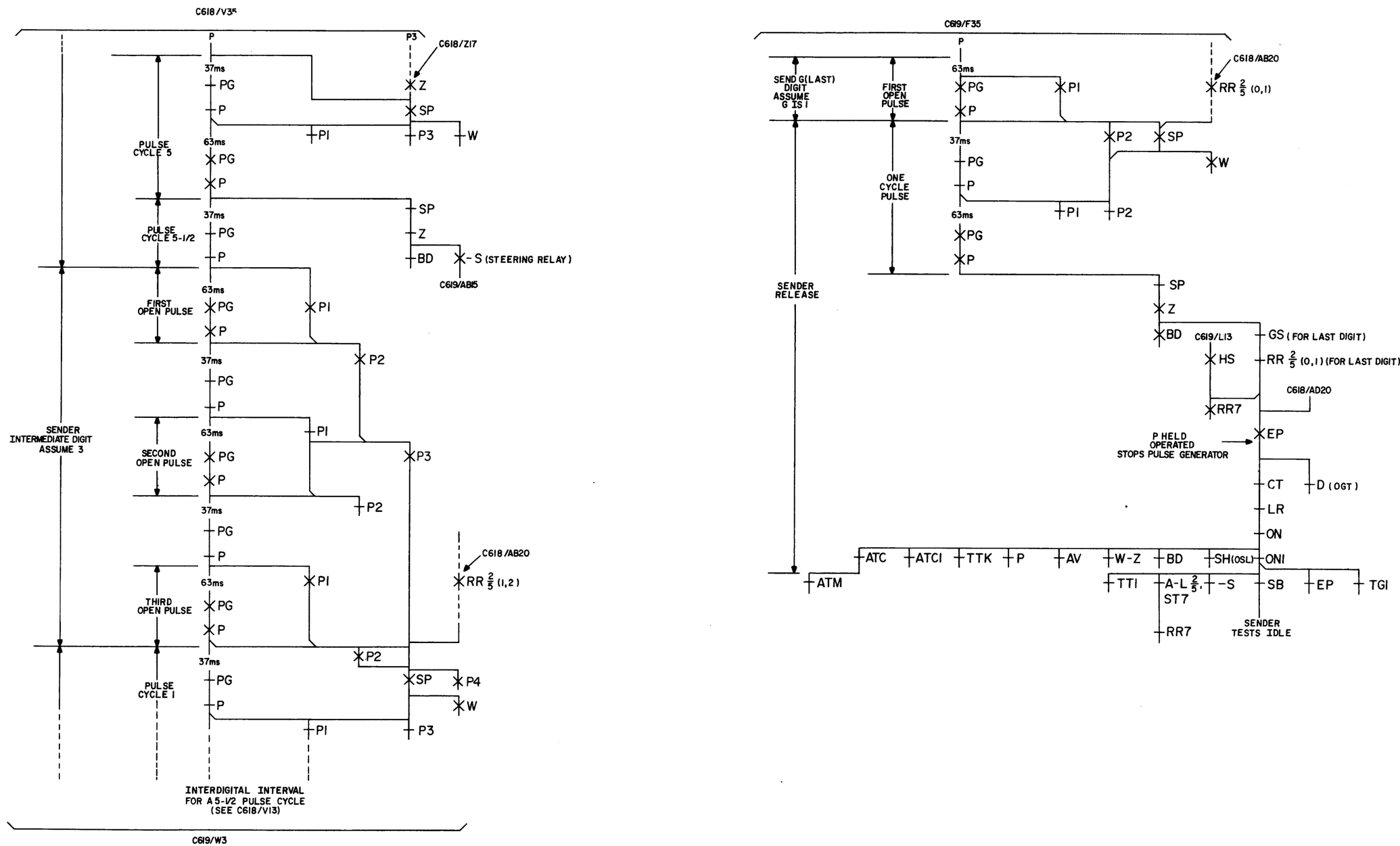

ISSUE 3

SEQUENCE CHART
REGULAR CALL DP SENDER

SFD-10-01-C619

BELL TELEPHONE LABORATORIES INCORPORATED

SIZE 6S

PRINTED IN U.S.A.

SFD-10-01-C619

BRUNING 44-131 24092

E-7481-B (10-70)

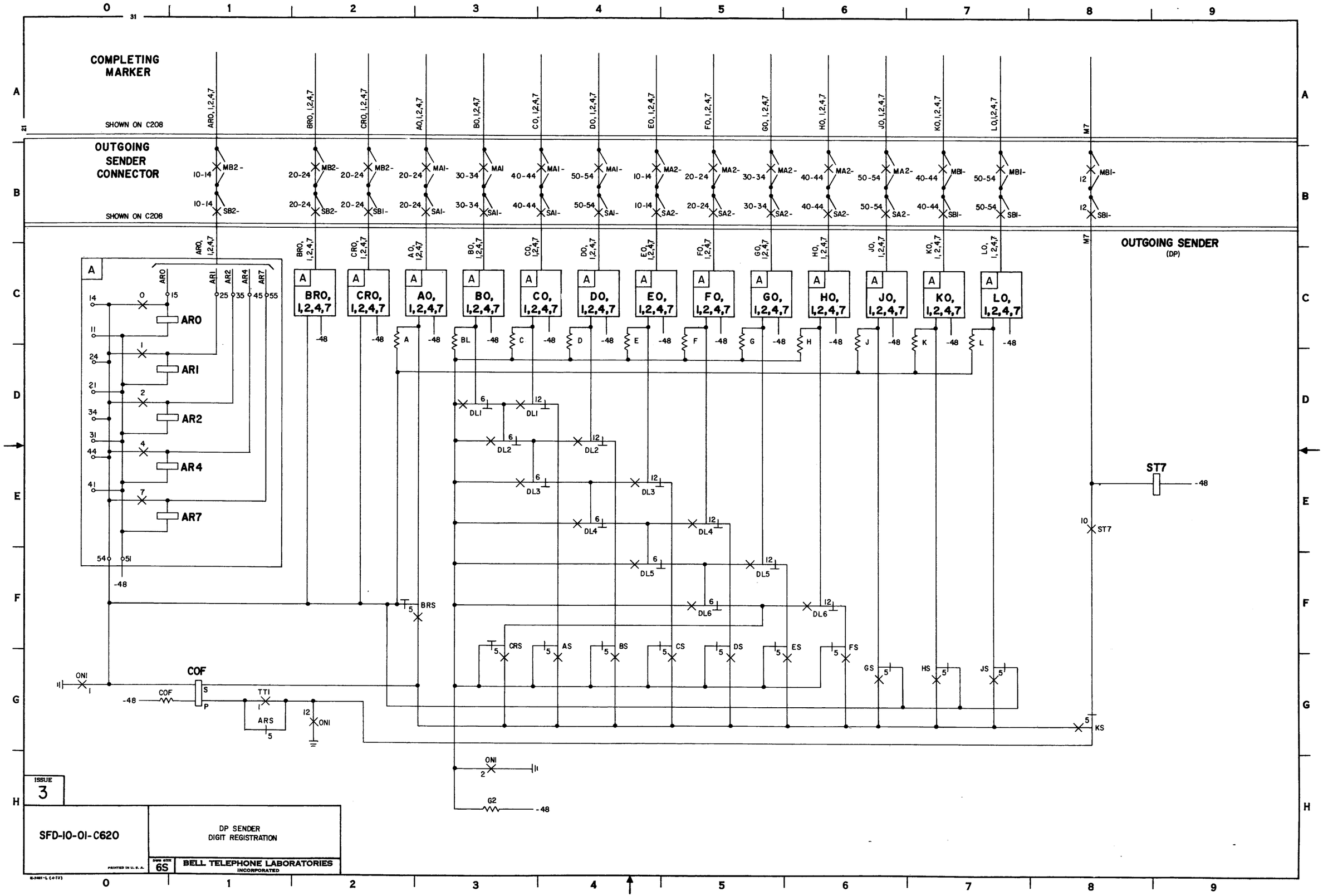

SFD-10-01-C620

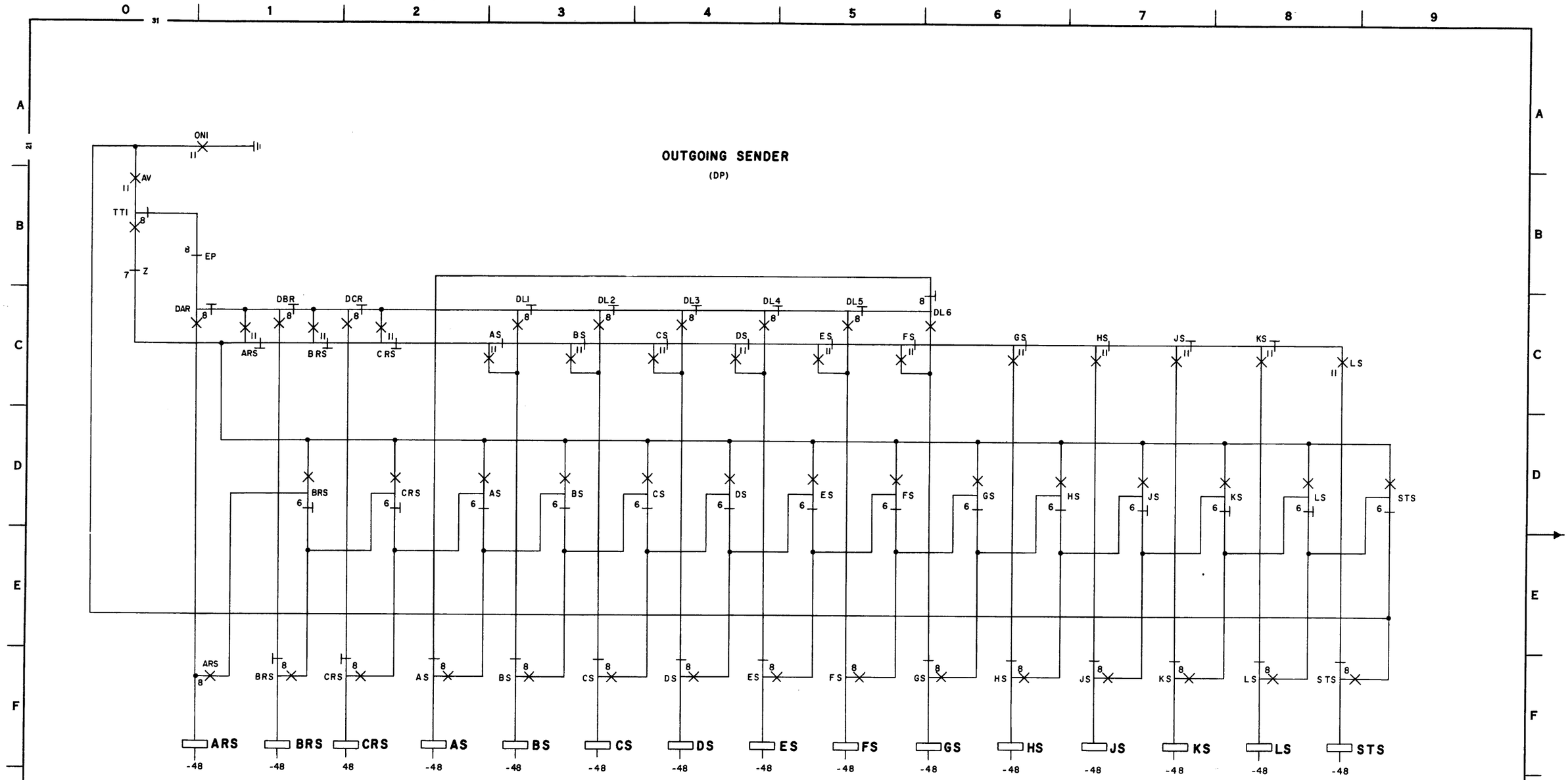

ISSUE 3

DP SENDER - DIGIT STEERING FOR OUTPLUSING

SFD-10-01-C621

BELL TELEPHONE LABORATORIES INCORPORATED

DWG SIZE 6S

PRINTED IN U.S.A.

SFD-10-01-C621

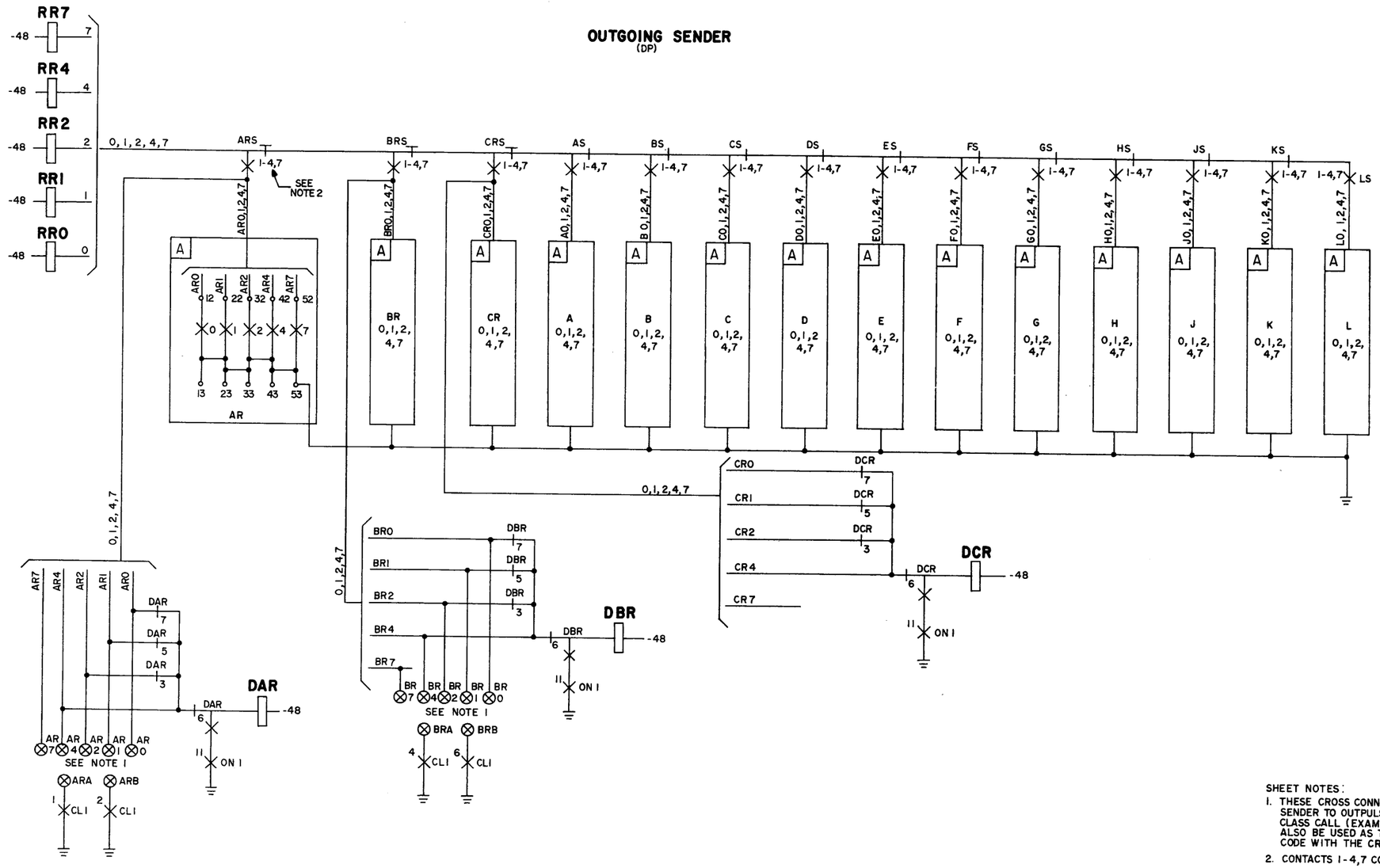

SHEET NOTES:

1. THESE CROSS CONNECTIONS ARE PROVIDED TO PERMIT THE SENDER TO OUTPULSE TWO FIXED ARBITRARY DIGITS ON A CL1 CLASS CALL (EXAMPLE: PREFIX 01 OR 11), AND THEY MAY ALSO BE USED AS THE FIXED FIRST TWO DIGITS OF AN XXX CODE WITH THE CR- DIGIT REGISTER AS THE THIRD DIGIT.
2. CONTACTS 1-4,7 CORRESPOND TO LEADS 0,1,2,4,7 RESPECTIVELY.

ISSUE 4

SFD-10-01-C622

DP SENDER
DIGIT REGISTRATION OUTPUT

DWG SIZE 6S

BELL TELEPHONE LABORATORIES INCORPORATED

PRINTED IN U.S.A.

E-7481-L (4-72)

SFD-10-01-C622

OUTGOING SENDER

(DP)

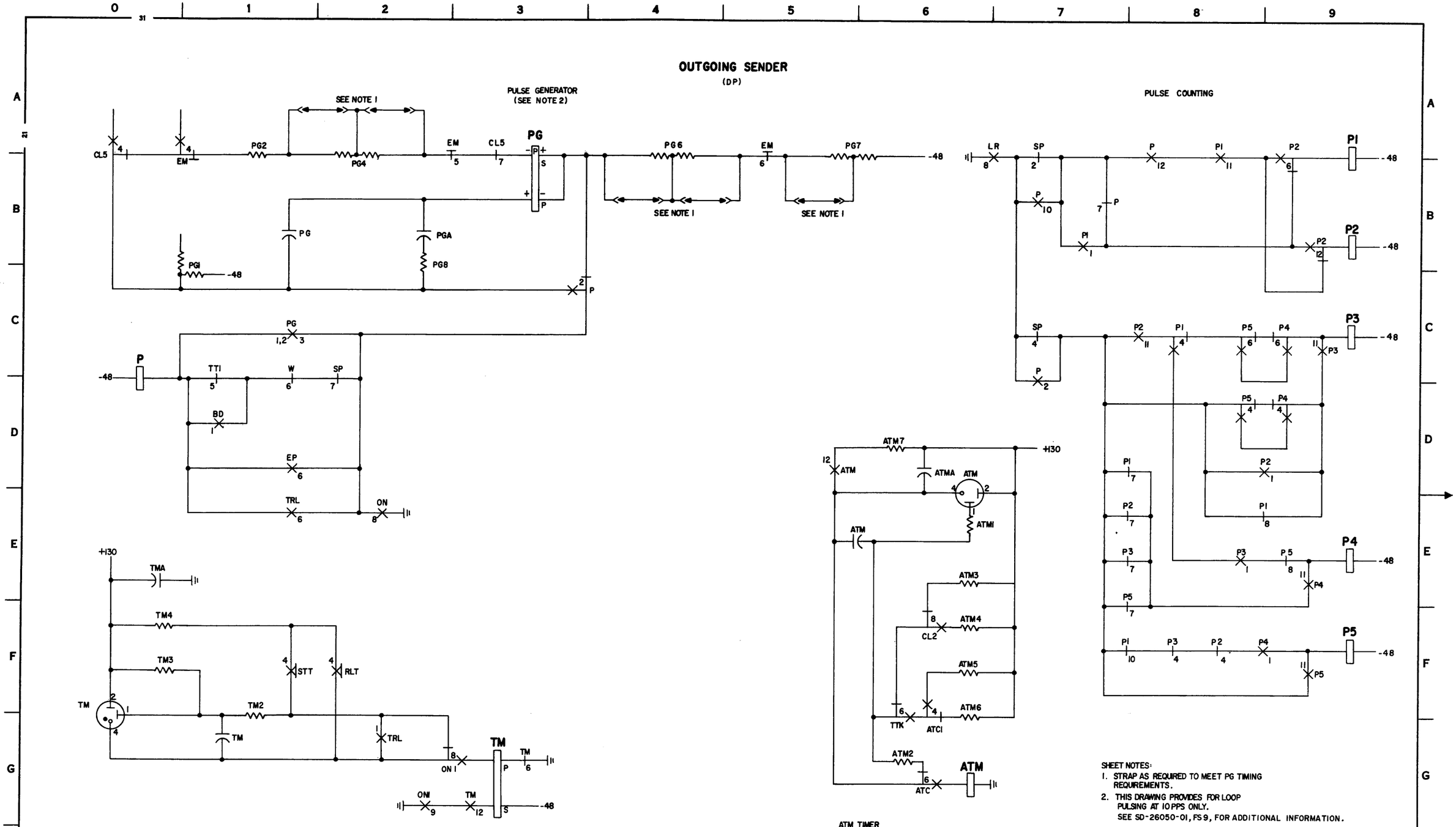

TM TIMER
(19 TO 37 s)

ATM TIMER
(INTERSENDER TIMING 4.4-8.4 s)
(TRUNK COVER-UP INTERVAL 0.62-1.2 s)

ISSUE 3

DP SENDER
PULSE GENERATOR, COUNTING, AND TIMING

SFD-10-01-C623

BELL TELEPHONE LABORATORIES INCORPORATED

6S

PRINTED IN U.S.A.

SFD-10-01-C623

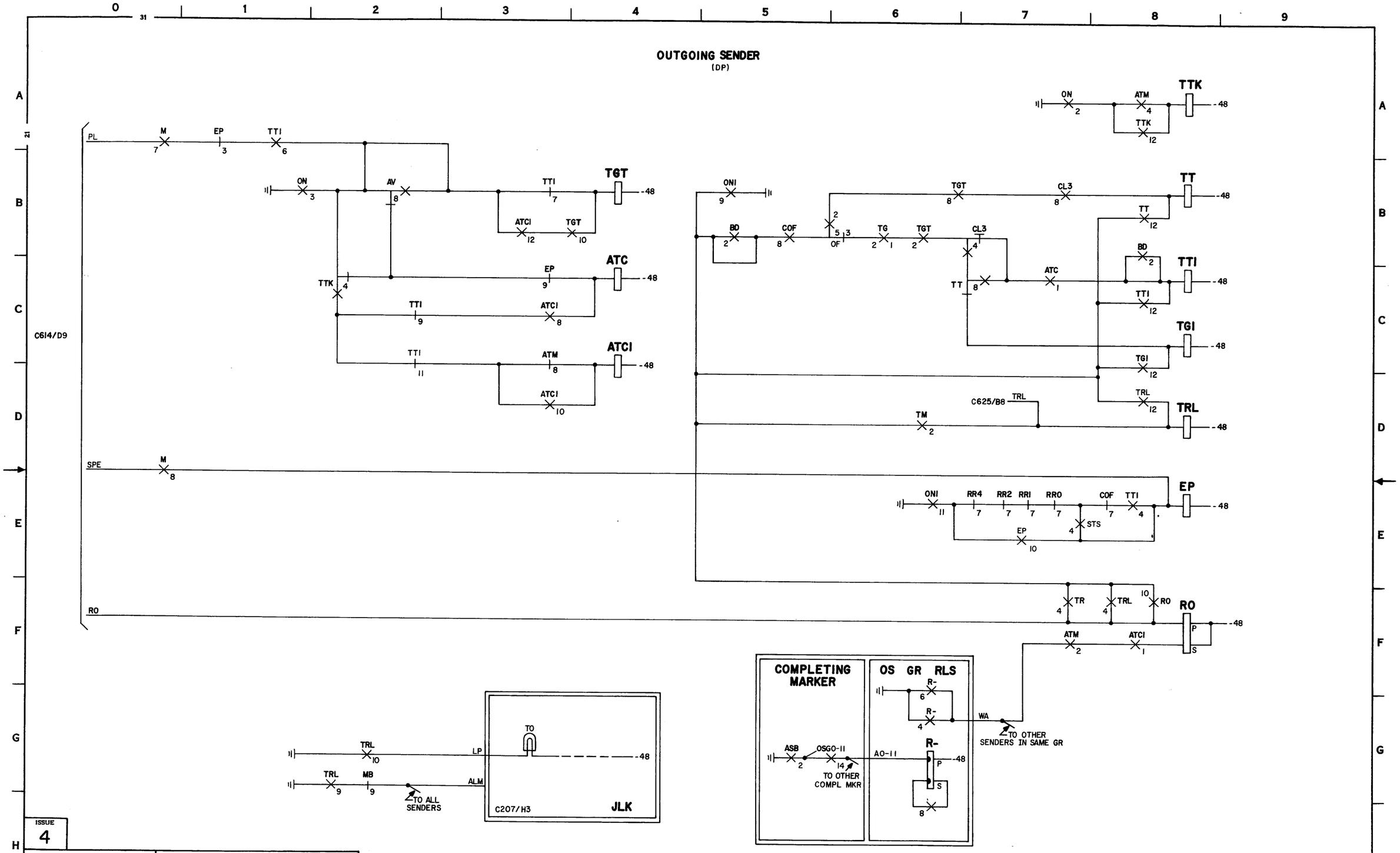

ISSUE 4

SFD-10-01-C624

DP SENDER
SUPERVISORY CONTROL

DWG SIZE 6S

BELL TELEPHONE LABORATORIES
INCORPORATED

PRINTED IN U. S. A.

E-7421-L (4-72)

SFD-10-01-C624

OUTGOING SENDER
(DP)

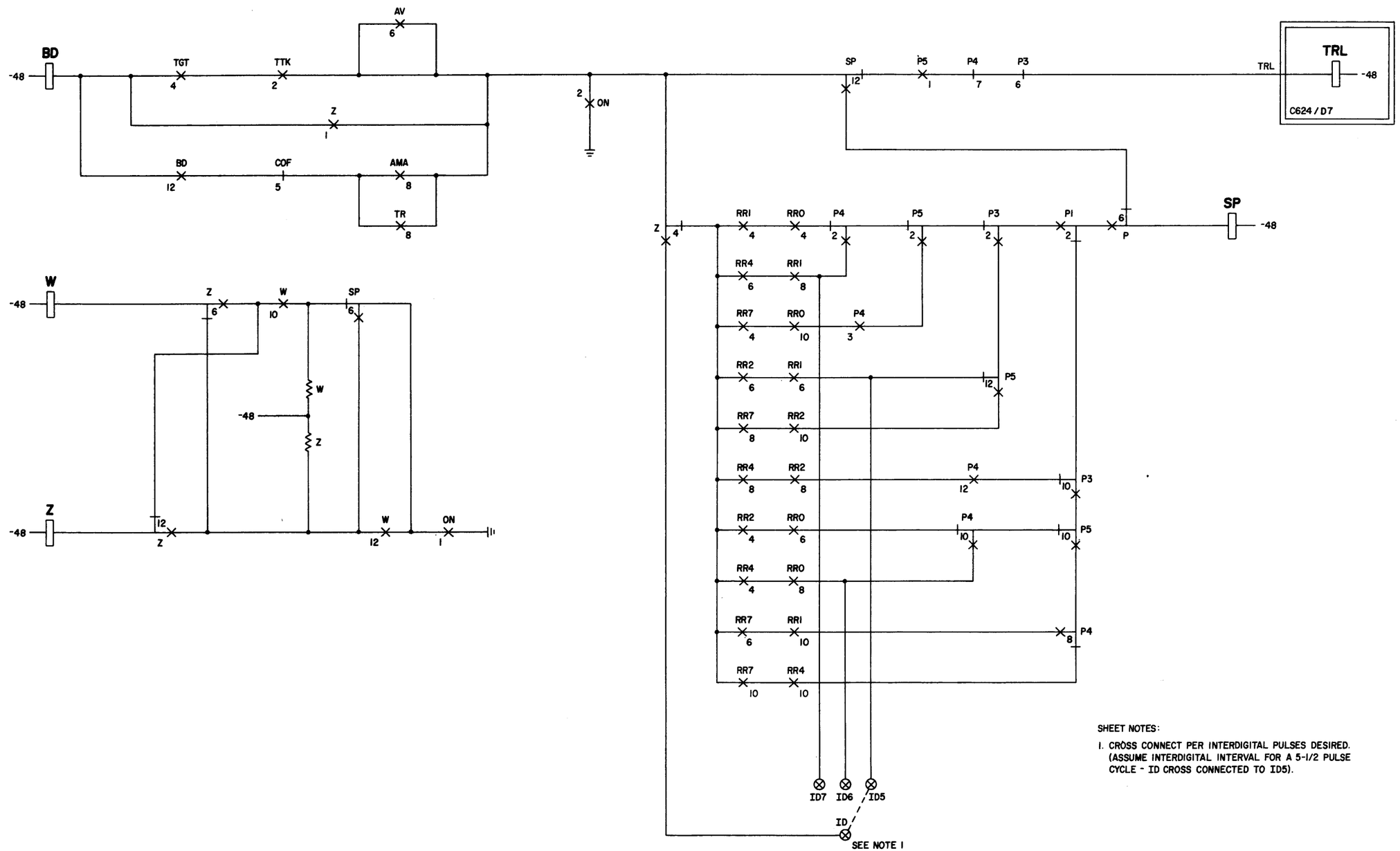

SHEET NOTES:

1. CROSS CONNECT PER INTERDIGITAL PULSES DESIRED. (ASSUME INTERDIGITAL INTERVAL FOR A 5-1/2 PULSE CYCLE - ID CROSS CONNECTED TO ID5).

ISSUE 3

DP SENDER
DIGIT CONTROL

SFD-10-01-C625

BELL TELEPHONE LABORATORIES INCORPORATED

6S

PRINTED IN U.S.A.

SFD-10-01-C625

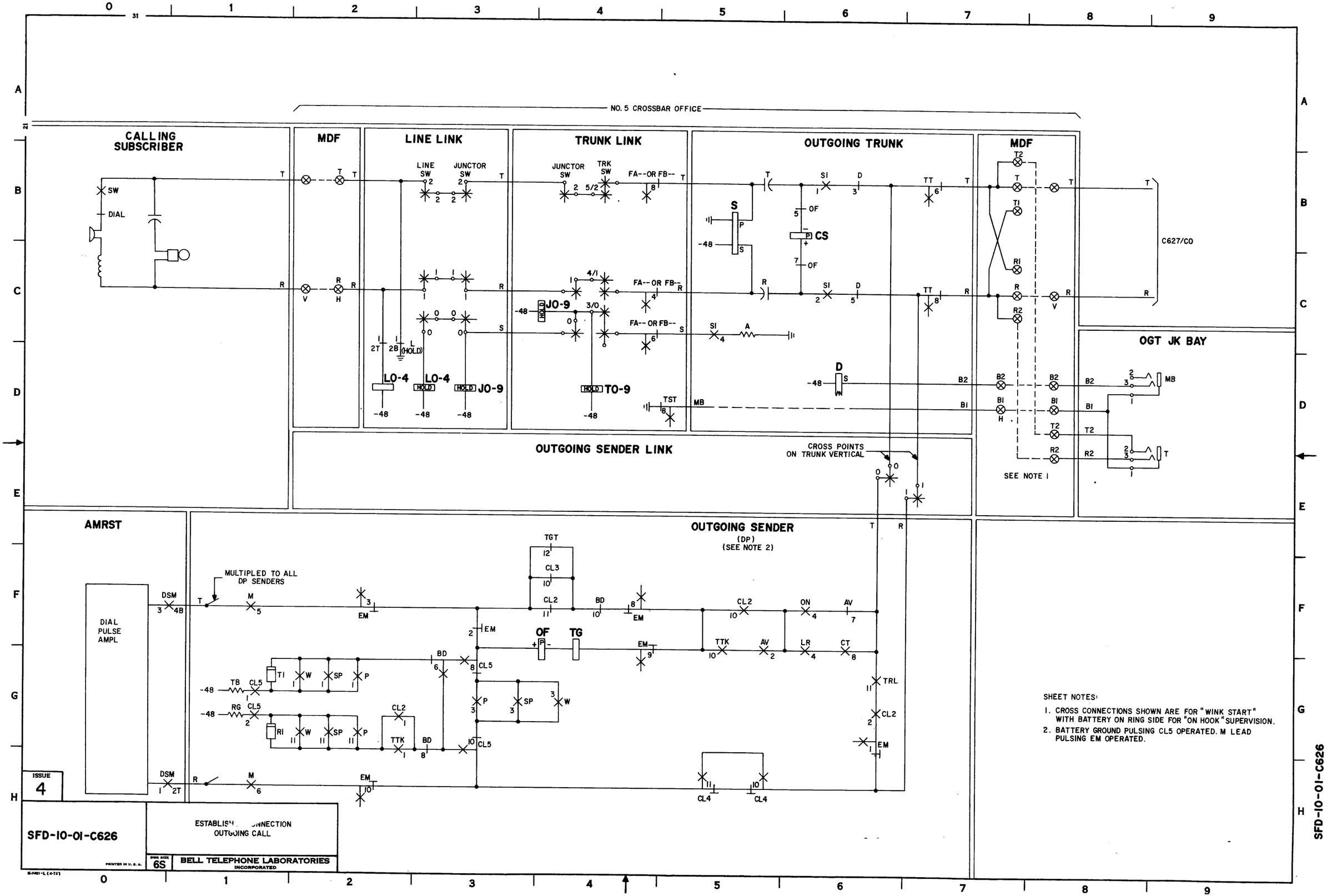
NO. 5 CROSSBAR OFFICE
CALLING SUBSCRIBER
SW
DIAL
MDF
LINE LINK
LINE SW
JUNCTOR SW
LO-4
JO-9
TRUNK LINK
JUNCTOR SW
TRK SW
FA--OR FB--
TO-9
OUTGOING TRUNK
S
CS
D
MDF
C627/CO
OGT JK BAY
MB
SEE NOTE 1
OUTGOING SENDER LINK
CROSS POINTS ON TRUNK VERTICAL
AMRST
DIAL PULSE AMPL
MULTIPLED TO ALL DP SENDERS
OUTGOING SENDER
(DP)
(SEE NOTE 2)
SHEET NOTES:
1. CROSS CONNECTIONS SHOWN ARE FOR "WINK START" WITH BATTERY ON RING SIDE FOR "ON HOOK" SUPERVISION.
2. BATTERY GROUND PULSING CL5 OPERATED. M LEAD PULSING EM OPERATED.
ISSUE 4
SFD-10-01-C626
ESTABLISH CONNECTION OUTGOING CALL
DWG SIZE 6S
BELL TELEPHONE LABORATORIES INCORPORATED
PRINTED IN U. S. A.
SFD-10-01-C626

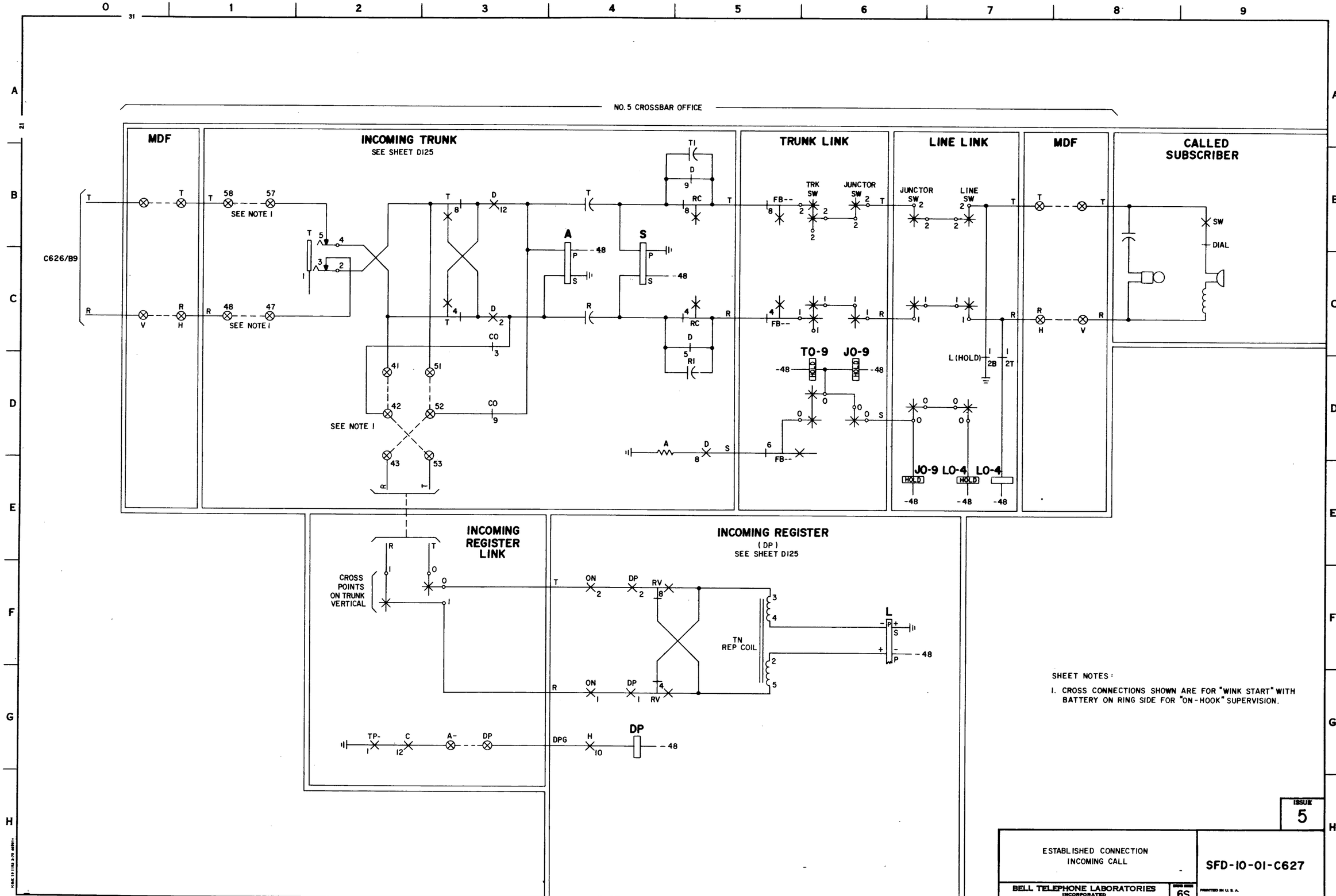

SFD-10-01-C627

ESTABLISHING OUTGOING CALL, NO SENDER

INDEX

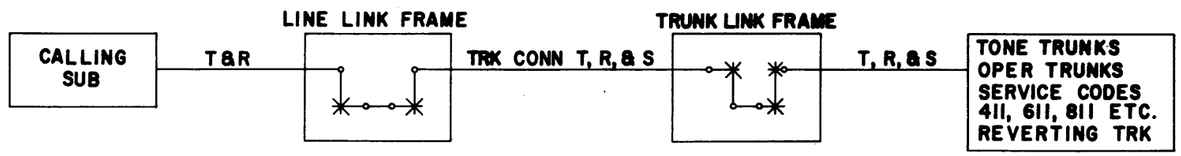

CAUTION!

DUE TO THE SIMPLIFIED NATURE OF THIS DOCUMENT, INFORMATION SHOWN MAY NOT BE COMPLETE.

ISSUE 3

PART C7
OUTGOING CALL, NO SENDER

SFD-10-01-C701

BELL TELEPHONE LABORATORIES INCORPORATED

DWG SIZE 6S

PRINTED IN U.S.A.

SFD-10-01-C701

REVERTING CALL

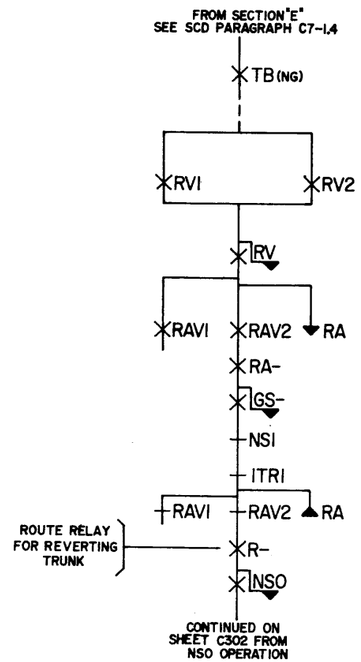

ROUTE ADVANCE TONE TRUNKS

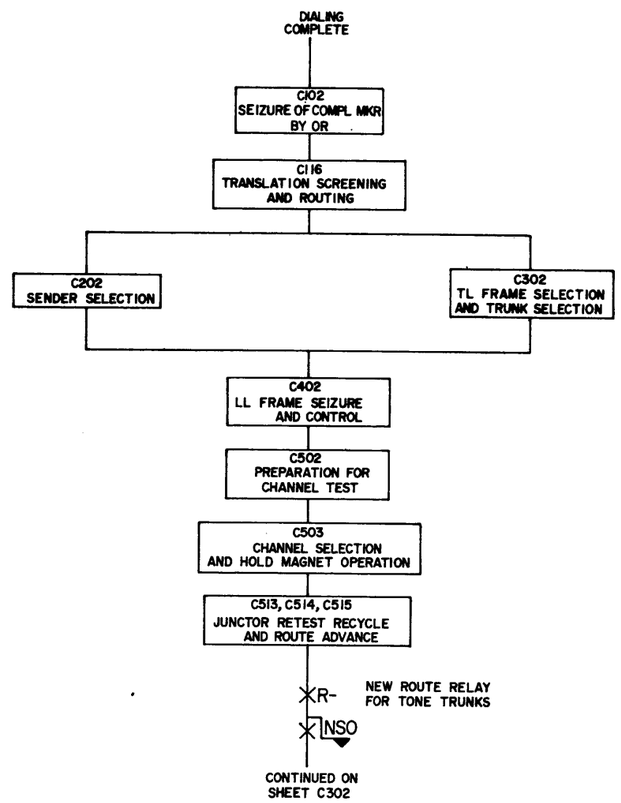

OPERATOR TRUNKS AND SERVICE CODES

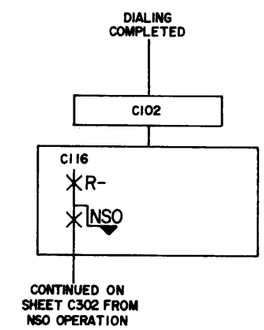

ISSUE 3

SFD-10-01-C702

SEQUENCE CHARTS
REVERTING CALL, OPERATOR TRUNKS
AND SERVICE CODES

SIZE 6S

BELL TELEPHONE LABORATORIES
INCORPORATED

PRINTED IN U.S.A.

SFD-10-01-C702

REVERTING CALL

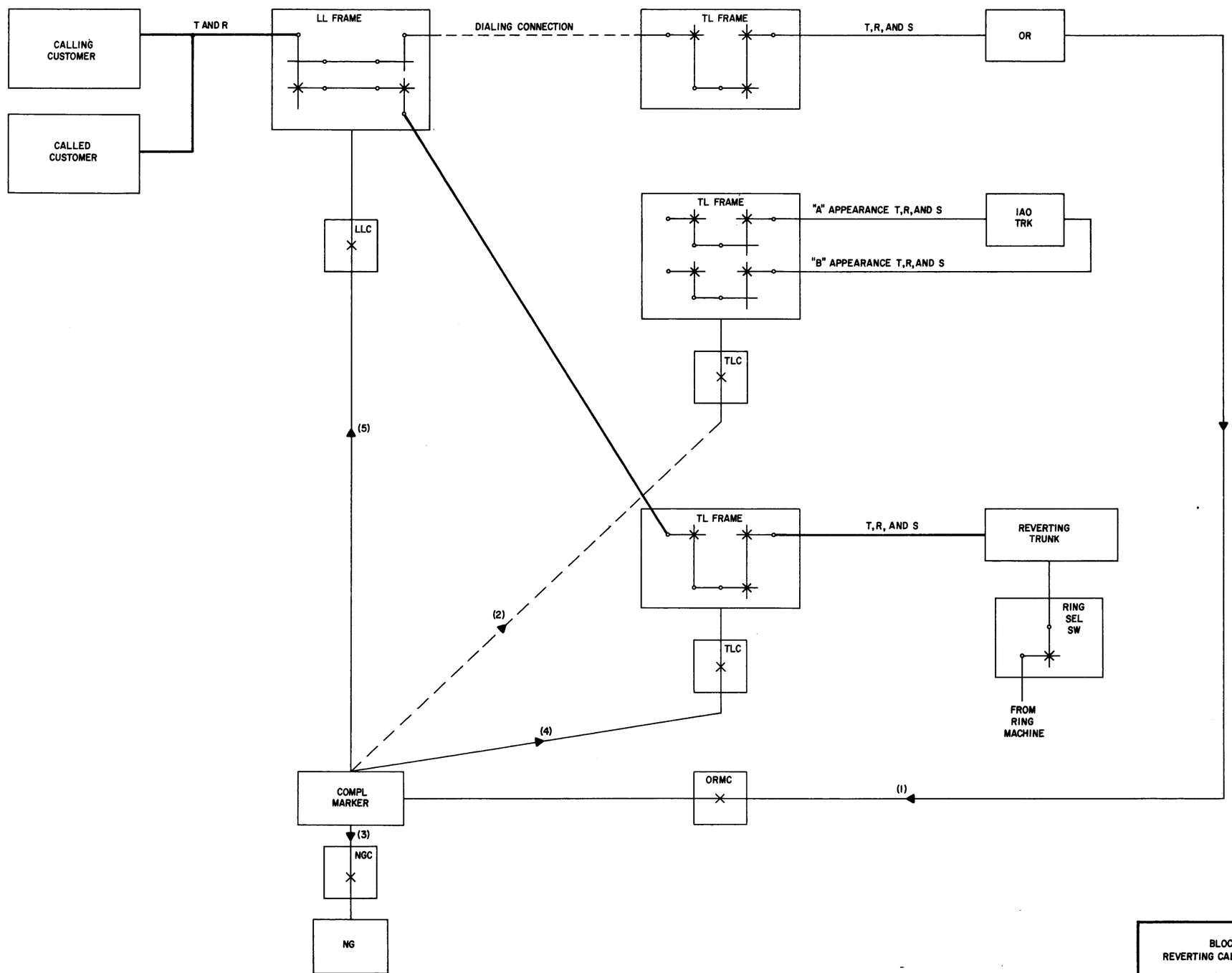

BLOCK SCHEMATIC
REVERTING CALL TRUNK CONNECTION

SFD-10-01-C703

ISSUE 3

BELL TELEPHONE LABORATORIES INCORPORATED

6S

PRINTED IN U.S.A.

SFD-10-01-C703

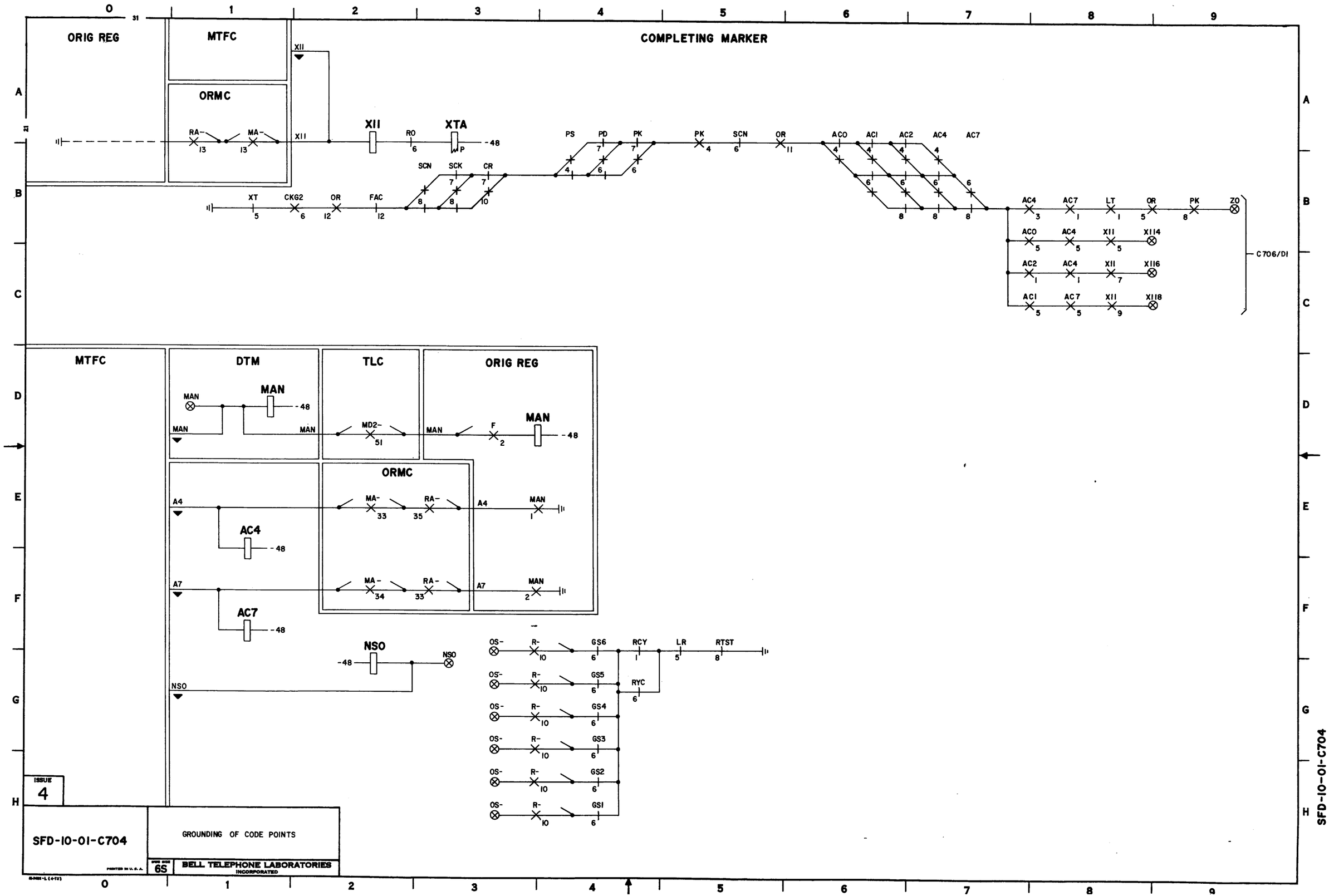

SFD-10-01-C704

COMPLETING MARKER

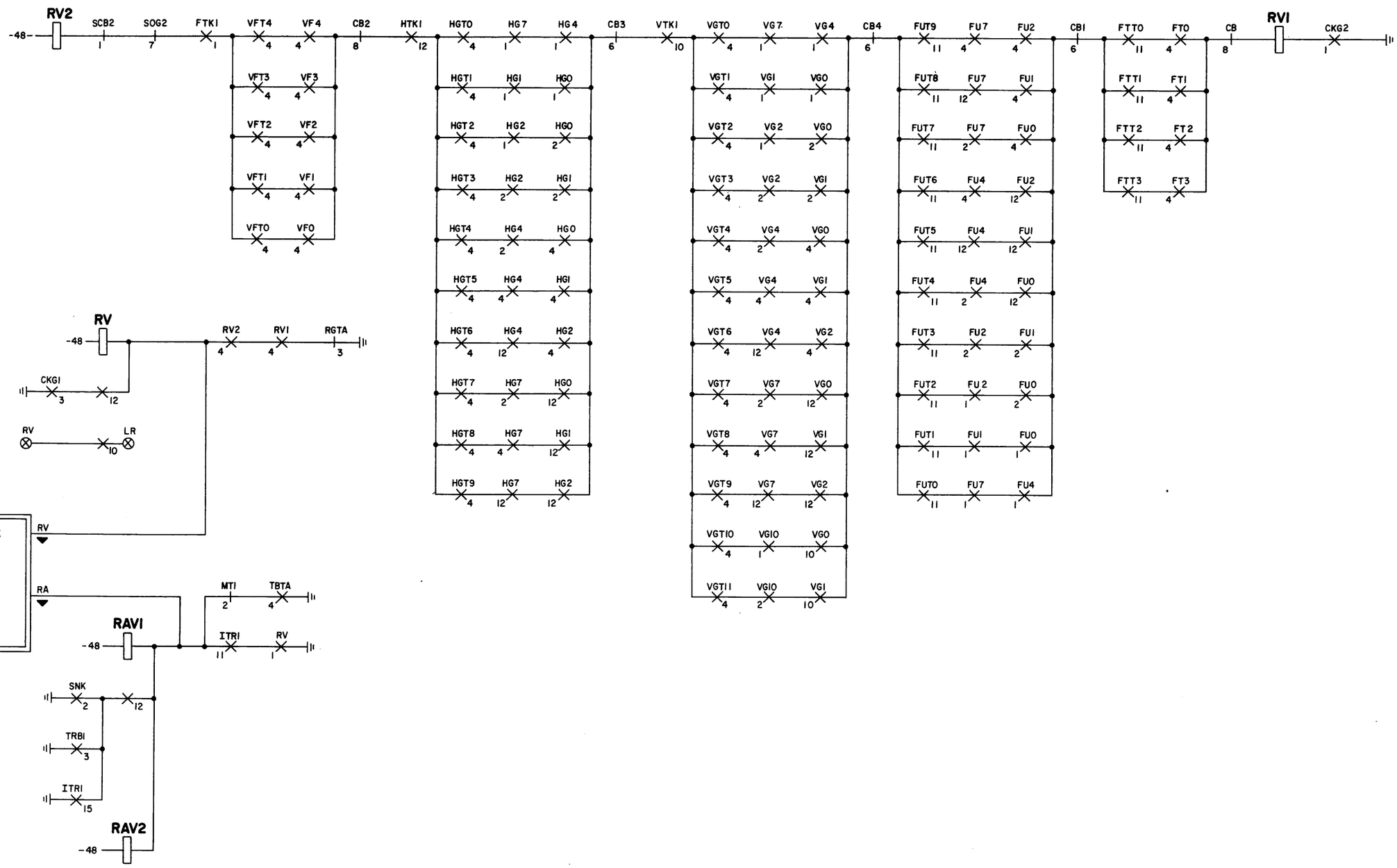

ISSUE 3

REVERTING RELAY OPERATION
CHECK PATHS

SFD-10-01-C705

BELL TELEPHONE LABORATORIES INCORPORATED

DWG SIZE 6S

PRINTED IN U.S.A.

SDF-10-01-C705

COMPLETING MARKER

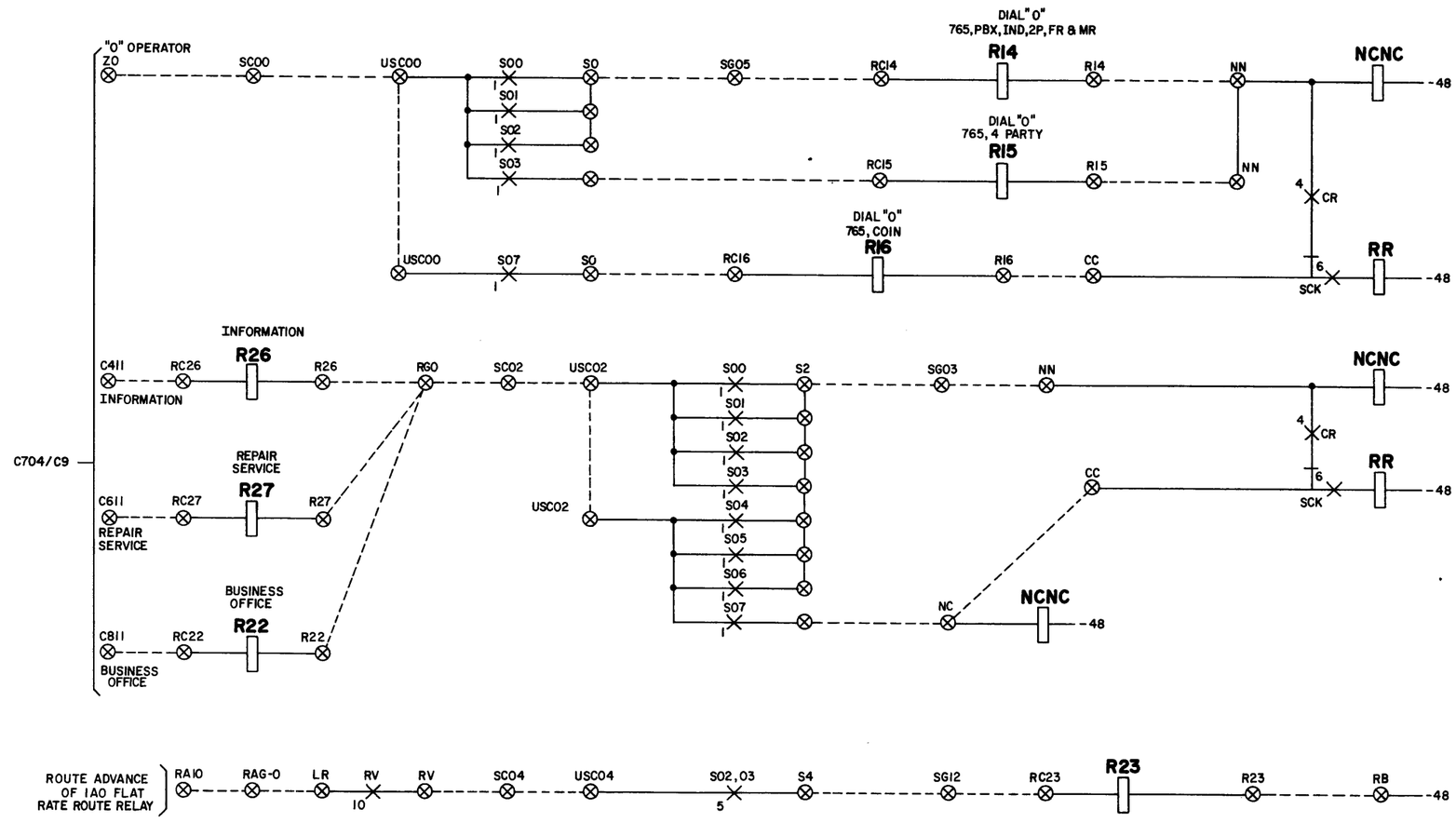

SHEET NOTES:

1. SEE SFD-C130, C131 AND C132 FOR MORE DETAIL OF ROUTE RELAY OPERATION AND SCREENING CROSS CONNECTIONS.

ISSUE 3

SFD-10-01-C706

PARTIAL & TYPICAL
ROUTE RELAY CROSS CONNECTION
SERVICE CODES & REVERTING CALL

SIZE 6S

BELL TELEPHONE LABORATORIES
INCORPORATED

PRINTED IN U.S.A.

SFD-10-01-C706

ESTABLISHING OUTGOING TRUNK CONNECTION

INDEX

CAUTION!

DUE TO THE SIMPLIFIED NATURE OF THIS DOCUMENT, INFORMATION SHOWN MAY NOT BE COMPLETE.

ISSUE 3

PART C8
MAINTENANCE-OUTGOING CALL

SFD-10-01-C801

BELL TELEPHONE LABORATORIES INCORPORATED

FORM SIZE 6S

PRINTED IN U. S. A.

SFD-10-01-C801

DOUBLE SIDED 2/X TROUBLE RECORD CARD (E5488)						KEY(S) OR SWITCH(ES) USED TO SIMULATE TROUBLE RECORD			
FUNCTION			SEE NOTE	DESIGNATION PERFORATED	LOCATION ON CARD	KEY DESIGNATION	SWITCH DESIGNATION	SWITCH POSITION	KEY DESIGNATION
TYPE OF CALL				SOG	S7,32	ORIG/OGT/MISC/ITDO/SDR	TSTA	ORIG/SDR	
							TSTB	OGT/MISC/ITDO	
CLASS OF CALL		ORIG		OR	S3,20		CL	OR-DP/MF	
		FACD		FAC	S3,21	FACD		FAC-DP/MF	
TRANSLATOR CLASS		LT		LT	S3,00		TRNA	LT	
		LT1		LT1	S3,40	LT1		LT1	
		LT2		LT2	S3,41	LT2		LT2	
		LT3		LT3	S3,42	LT3		LT3	
		2DT		2DT	S3,02	2DTO		2DT	
		X11		X11	S3,04	X11		X11	
		11		11	S3,10	11		11	
		FVD		FVD	S3,03	FVDO		FVD	
MARKER				MKR CM	S8,30	MT(0-11)			
		TENS		DRT (0,1)	S8,54,A				MTT1
		UNITS		DR (2/5)	S8,44,50-53		MTU	0-9	
CALLED DIGITS A-L (0-9)				A-L (2/5)	S1,00-54,R8,00-44	A-L(0-9)	A-L	0-9	
LINE LOCATION	FRAME	TENS	1	FT-(1/4)/FT-(2/4)	R1,00-03	FT(0-5)	FT	0-5	
		UNITS		FU-(2/5)	R1,04,10-13	FU(0-9)	FU	0-9	
	VERTICAL GROUP			VG-(2/6)	R1,14,20-24	VG(0-13)	VGU	0-9	VGT1
	HORIZONTAL GROUP			HG-(2/5)	R1,30-34	HG(0-9)	HG	0-9	
	VERTICAL FILE			VF-(1/5)	R1,40-44	VF(0-4)	VF	0-4	
CLASS OF SERVICE	30,60,OR 100 CLASSES	TENS		CT-(2/5)	SA1,B,00-03	CST(0-9)	CST	0-9	
		UNITS		CU-(2/5)	SA1,4,10-13	CSU(0-9)	CSU	0-9	
	60 CLASSES	0-29		CGA	SA2,24				
		30-59		CGB	SA2,30	CGB			CGB
RATE TREATMENT		TENS 0		CGA	SA2,24	CSGA			CSGA
		TENS 1		CGB	SA2,30	CSGB			CSGB
		UNITS		CRU-(2/5)	SA1,14,20-23	CRU(0-9)	CRU	0-9	
TRUNK LINK	FRAME	TENS		FS/T-(1/3)	SA0,21-23	FG(0-2)			FG(0-2)
		UNITS		FS/U-(2/5)	SA0,24,30-33	FS(0-9)	FS	0-9	
			2			FS OR NTFS			FS OR NTFS
TRUNK		TENS		TS/T-(0-1)	SA0,34,40	TS(10-19)			TST1
		UNITS		TS/U-(2/5)	SA0,41-44,50	TS(0-9)	TSU	0-9	
			2			TS OR NTTS			TS OR NTTS
TRUNK ALLOTTER	GROUP A			GPA	R6,13	GPA			GPA
	GROUP B			GPB	R6,14	GPB			GPB
OUTGOING SENDER			5			OSS			OSS
	SENDER GROUP	TENS	4	OGT/T-(0-1)	R4,0-1	SG(0-10)			SGT
		UNITS		OSG/U-(2/5)	R4,2-4,10,11		SG	0-10	
	GROUP A			SSA	R4,12	SGA			SGA
	GROUP B			SSB	R4,13	SGB			SGB
	SENDER			OS (0-4)	R3,10-14	OS(0-4)	OS	0-4	
CHANNEL				CH-(2/5)	RA7,24,30-33	CH(0-9)	CH	0-9	
JUNCTOR STEP				STP1/STP2	RA8,52,53	STP1/STP2			STP1/STP2
JUNCTOR GROUP			3	JG (0-4)	RA7,44,50-53	JSQ(0-5)	JSQ	0-5	
ROUTE ADVANCE			6	RA,GS(1-5)	S6,21,R6,0-4	RA(0-3)	RAU	0-9	RAT1
OBSERVED CALL				OBS	R6,52	OBS			OBS

SHEET NOTES:

1. THE CONNECTION ESTABLISHED BY THE MARKER IS FROM THE LINE LINK LOCATION TO AN OUTGOING TRUNK. THE OPERATION OF THE LINE HOLD MAGNET IS SIMULATED IF THE NTC KEY IS NOT OPERATED. IF THE NTC KEY IS OPERATED, THE NO-TEST HOLD MAGNET IN THE ASSOCIATED HORIZONTAL GROUP IS OPERATED TO EXTEND THE CHANNEL CONNECTION BACK TO THE MASTER TEST CONTROL CIRCUIT.
2. USE FS AND TS RATHER THAN NTFS AND NTTS KEYS UNLESS TRUNK TO BE SELECTED IS MADE BUSY.
3. CONSULT JUNCTOR, SEQUENCE TABLE ON C808 FOR SETTING OF JSQ KEY OR SWITCH FOR PARTICULAR JG- AND STP- DESIGNATIONS PERFORATED.
4. SG KEY OR SWITCH IS LOCATED ON A AMRST PANEL AND IS USED ON A SENDER TYPE OF TEST (SFDC814) TO DIRECT THE MARKER TO A PARTICULAR SENDER GROUP.
5. THE OSS KEY OPERATED ENABLES THE MARKER TO SELECT A PARTICULAR SENDER CHOSEN BY THE SGA/B KEY AND OS- KEY OR SWITCH.
6. THE GS1-5 INDICATES THE GROUND SUPPLIES FROM WHICH THE CALL HAS ROUTE ADVANCED.

ISSUE 4

SFD-10-01-C802

SIMULATION OF OUTGOING CALLS WHICH PRODUCE 2/X DOUBLE SIDED TROUBLE RECORD CARDS (E5488)

DWG ASSN 6S

BELL TELEPHONE LABORATORIES INCORPORATED

PRINTED IN U.S.A.

CBL-266(10-75)

SFD-10-01-C802

SUBSCRIBER OUTGOING
2/X DOUBLE SIDED TROUBLE CARD

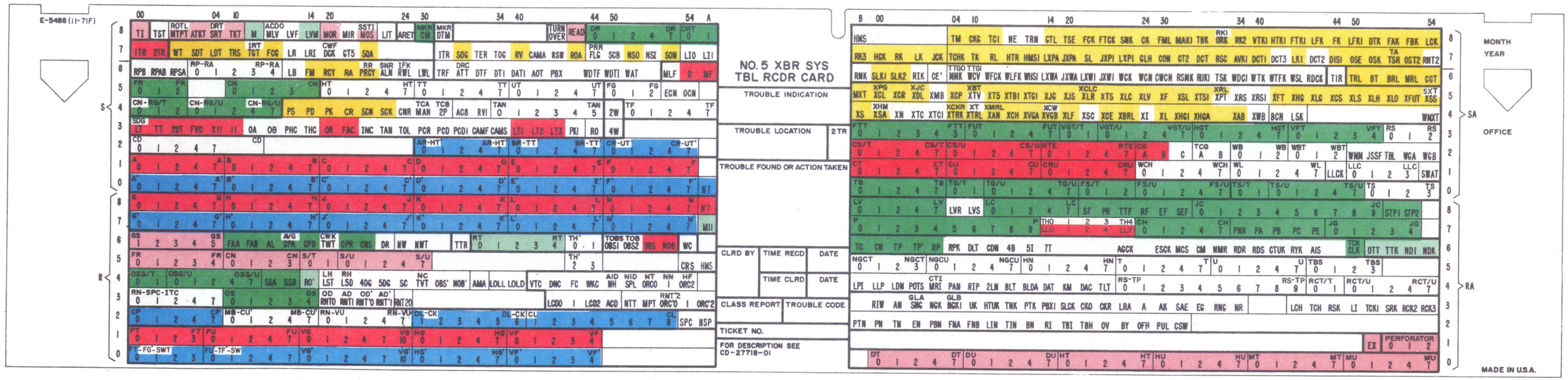

MISCELLANEOUS

INPUT TO MARKER

CIRCUITS OR PATHS USED

OUTPUT FROM MARKER TO OUTGOING SENDER

PROGRESS AND TROUBLE INDICATIONS

DESIGNATIONS WHICH MAY BE PERFORATED UNDER VARIOUS CONDITIONS

SFD-10-01-C803
7 SHEETS, SHEET 1

ISSUE 3

NO. 5 XBR 2/X DOUBLE SIDED TROUBLE RECORD CARD (E5488) INDICATING DESIGNATIONS WHICH MAY BE PERFORATED ON A SUBSCRIBER OUTGOING CALL

BELL TELEPHONE LABORATORIES INCORPORATED

DWG SIZE 6S

SFD-10-01-C803

PRINTED IN U.S.A.

E-7421 (10-71)

DOUBLE SIDED I/X TROUBLE RECORD CARD (E4393)					KEY(S) OR SWITCH(ES) USED TO SIMULATE TROUBLE RECORD			
FUNCTION			SEE NOTE	DESIGNATION PERFORATED	LOCATION ON CARD	KEY DESIGNATION	SWITCH DESIGNATION	SWITCH POSITION	KEY DESIGNATION
TYPE OF CALL				SOG	S7,32	ORIG/OGT/MISC/ITDO/SDR	TSTA	ORIG/SDR	
							TSTB	OGT/MISC/ITDO	
CLASS OF CALL		ORIG		OR	S3,20		CL	OR-DP/MF	
		FACD		FAC	S3,21	FACD		FAC-DP/MF	
TRANSLATOR CLASS		LT		LT	S3,00		TRNA	LT	
		LTI		LTI	S3,40	LTI		LTI	
		LT2		LT2	S3,41	LT2		LT2	
		LT3		LT3	S3,42	LT3		LT3	
		2DT		2DT	S3,02	2DTO		2DT	
		XII		XII	S3,04	XII		XII	
		II		II	S3,10	II		II	
		FVD		FVD	S3,03	FVDO		FVD	
MARKER			7	MKR	S8,30	MT(0-11)			
		TENS I		DRTI	S8,54				MTTI
		TENS 0		DRTO	S7,54				
		UNITS		DR(0-9)	S8,34,40-44,50-53		MTU	0-9	
CALLED DIGITS A-L (0-9)				A-L(2/5)	S1,00-54,58,00-44	A-L(0-9)	A-L	0-9	
LINE LOCATION	FRAME	TENS	1	FT-(1/4)/FT-(2/4)	R1,00-03	FT(0-5)	FT	0-5	
		UNITS		FU-(2/5)	R1,04-13	FU(0-9)	FU	0-9	
	VERTICAL GROUP			VG-(2/6)	R1,14-23	VG(0-13)	VGU	0-9	VGTI
	HORIZONTAL GROUP			HG-(2/5)	R1,30-34	HG(0-9)	HG	0-9	
	VERTICAL FILE			VF-(1/5)	R1,40-44	VF(0-4)	VF	0-4	
CLASS OF SERVICE	30,60,100 CLASSES	TENS		CT-(2/5)	R1,50-52,R2,52,53	CST(0-9)	CST	0-9	
		UNITS		CU-(2/5)	R0,50-54	CSU(0-9)	CSU	0-9	
	60 CLASSES	0-29		CGA	R1,53				
		30-59		CGB	R1,54	CGB			CGB
RATE TREATMENT		TENS 0		CGA	R1,53	CSGA			CSGA
		TENS I		CGB	R1,54	CSGB			CSGB
		UNITS		CRU-(2/5)	R8,49-54,R7,54	CRU(0-9)	CRU	0-9	
TRUNK LINK	FRAME	TENS		FS(0-29)	SA0,00-54	FG(0-2)			FG(0-2)
		UNITS				FS(0-9)	FS	0-9	
			2			FS OR NTFS			FS OR NTFS
TRUNK		TENS		TS(0-19)	RA8,00-34	TS(10-19)			TSTI
		UNITS				TS(0-9)	TSU	0-9	
			2			TS OR NTTS			TS OR NTTS
TRUNK ALLOTTER	GROUP A			GPA	R6,13	GPA			GPA
	GROUP B			GPB	R6,14	GPB			GPB
OUTGOING SENDER			5			OSS			OSS
	SENDER GROUP		4	OSG(0-11)	RA,00-21	SG(0-10)	SG	0-10	SGT
	GROUP A			SSA	R4,22	SGA			SGA
	GROUP B			SSB	R4,23	SGB			SGB
	SENDER			OS(0-4)	R4,24-33		OS	0-4	
CHANNEL				CH(0-9)	RA5,10-24	CH(0-9)	CH	0-9	
JUNCTOR STEP				STPI/STP2	RA5,53,54	STPI/STP2			STPI/STP2
JUNCTOR GROUP			3	JG(0-4)	RA6,20-24	JSQ(0-5)	JSQ	0-5	
ROUTE ADVANCE			6	RA,GS(1-5)	S6,21,R6,00-04	RA(0-3)	RAU	0-9	RATI
OBSERVED CALL				OBS	S2,21	OBS			OBS

SHEET NOTES:

1. THE CONNECTION ESTABLISHED BY THE MARKER IS FROM THE LINE LINK LOCATION TO AN OUTGOING TRUNK. THE OPERATION OF THE LINE HOLD MAGNET IS SIMULATED IF THE NTC KEY IS NOT OPERATED. IF THE NTC KEY IS OPERATED, THE NO-TEST HOLD MAGNET IN THE ASSOCIATED HORIZONTAL GROUP IS OPERATED TO EXTEND THE CHANNEL CONNECTION BACK TO THE MASTER TEST CONTROL CIRCUIT.
2. USE FS AND TS RATHER THAN NTFS AND NTTS KEYS UNLESS TRUNK TO BE SELECTED IS MADE BUSY.
3. CONSULT JUNCTOR, SEQUENCE TABLE ON C808 FOR SETTING OF JSQ KEY OR SWITCH FOR PARTICULAR JG- AND STP- DESIGNATIONS PERFORATED.
4. SG KEY OR SWITCH IS LOCATED ON AMRST PANEL AND IS USED ON A SENDER TYPE OF TEST (SFDC814) TO DIRECT THE MARKER TO A PARTICULAR SENDER GROUP.
5. THE OSS KEY OPERATED ENABLES THE MARKER TO SELECT A PARTICULAR SENDER CHOSEN BY THE SGA/B KEY AND OS- KEY OR SWITCH.
6. THE GSI-5 INDICATES THE GROUND SUPPLIES FROM WHICH THE CALL HAS ROUTE ADVANCED.
7. OBSERVE DRTO/I AND DR 0-9 AND CONSULT OFFICE RECORDS TO DETERMINE WHETHER RECORD WAS PRODUCED BY A COMPLETING MARKER.

ISSUE 4

SFD-10-01-C804

SIMULATION OF OUTGOING CALLS WHICH PRODUCE I/X DOUBLE SIDED TROUBLE RECORD CARDS (E4393)

DWG SIZE 6S

BELL TELEPHONE LABORATORIES INCORPORATED

PRINTED IN U. S. A.

CBL-266(10-75)

SFD-10-01-C804

SUBSCRIBER OUTGOING
I/X DOUBLE SIDED TROUBLE CARD

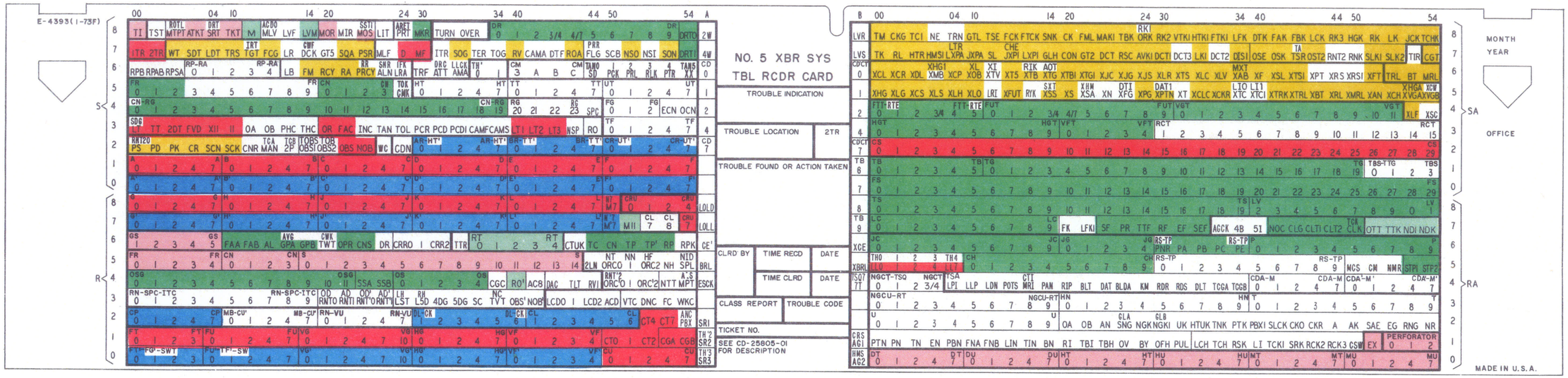

MISCELLANEOUS

INPUT TO MARKER

CIRCUITS OR PATHS USED

OUTPUT FROM MARKER TO OUTGOING SENDER

PROGRESS AND TROUBLE INDICATIONS

DESIGNATIONS WHICH MAY BE PERFORATED UNDER VARIOUS CONDITIONS

ISSUE 3

NO. 5 XBR I/X DOUBLE SIDED TROUBLE RECORD CARD (E4393) INDICATING DESIGNATIONS WHICH MAY BE PERFORATED ON A SUBSCRIBER OUTGOING CALL

SFD-10-01-C805

BELL TELEPHONE LABORATORIES INCORPORATED

DWG SIZE 6S

PRINTED IN U.S.A.

E-7481 (10-71)

SFD-10-01-C805
7 SHEETS, SHEET 1

SINGLE SIDED I/X TROUBLE RECORD CARD (E3638)						KEY(S) OR SWITCH(ES) USED TO SIMULATE TROUBLE RECORD			
FUNCTION			SEE NOTE	DESIGNATION PERFORATED	LOCATION ON CARD	KEY DESIGNATION	SWITCH DESIGNATION	SWITCH POSITION	KEY DESIGNATION
TYPE OF CALL				SOG	S7,7	ORIG/OGT/MISC/ITDO/SDR	TSTA	ORIG/SDR	
							TSTB	OGT/MISC/ITDO	
CLASS OF CALL		ORIG		OR	S4,9		CL	OR-DP/MF	
		FACD		FAC	S4,14	FACD		FAC-DP/MF	
TRANSLATOR CLASS		LT		LT	S4,0		TRNA	LT	
		LTI		LTI	S4,15	LTI		LTI	
		LT2		LT2	R4,42	LT2		LT2	
		2DT		2DT	S7,4	2DTO		2DT	
		XII		XII	S4,3	XII		XII	
		II		II	S4,4	II		II	
		FVD		FVD	S4,2	FVDO		FVD	
MARKER				MKR	S8,15				
		TENS	7	DRT-	S7,19-20	MT(0-11)			MTTI
		UNITS		DR-	S8,19-28				
CALLED DIGITS A-L (0-9)				A-L(2/5)	S0,0-29,R7,0-24	A-L(0-9)	MTU	0-9	
							A-L	0-9	
LINE LOCATION	FRAME	TENS		FT-(1/4)/FT-(2/4)	R1,0-3	FT(0-3)	FT	0-3	
		UNITS		FU-(2/5)	R1,4-8	FU(0-9)	FU	0-9	
	VERTICAL GROUP		1	VG-(2/6)	R1,9-14	VG(0-13)	VGU	0-9	VGTI
	HORIZONTAL GROUP			HG-(2/5)	R1,15-19	HG(0-9)	HG	0-9	
	VERTICAL FILE			VF-(1/5)	R1,20-24	VF(0-4)	VF	0-4	
CLASS OF SERVICE	30 OR 60 CLASSES	TENS		CT-(1/3)	R1,25-27	CST(0-9)	CST	0-9	
		UNITS		CU-(2/5)	R0,25-29	CSU(0-9)	CSU	0-9	
	60 CLASSES	0-29		CGA	S3,42				
		30-59		CGB	S3,43	CGB			CGB
TRUNK LINK	FRAME	TENS		FS(0-19)	S1,30-49	FG(0-1)			FG(0-1)
		UNITS				FS(0-9)	FS	0-9	
			2			FS OR NTFS			FS OR NTFS
TRUNK		TENS		TS(0-19)	S0,30-39	TS(10-19)			TSTI
		UNITS				TS(0-9)	TSU	0-9	
			2			TS OR NTTS			TS OR NTTS
TRUNK ALLOTTER	GROUP A			GPA	R5,38	GPA			GPA
	GROUP B			GPB	R5,39	GPB			GPB
OUTGOING SENDER			5			OSS			OSS
	SENDER GROUP		4	OSG(0-5)(6-9)	S1,0-5,24-27	SG(0-10)	SG	0-10	SGT
	GROUP A			SSA	S1,6	SGA			SGA
	GROUP B			SSB	S1,7	SGB			SGB
	SENDER			OS(0-4)	S1,8-12	OS(0-4)	OS	0-4	
CHANNEL				CH(0-9)	R7,50-59	CH(0-9)	CH	0-9	
JUNCTOR STEP				STP1/STP2	R5,30-31	STP1/STP2			STP1/STP2
JUNCTOR GROUP			3	JG(0-4)	R6,40-44	JSQ(0-5)	JSQ	0-5	
ROUTE ADVANCE			6	RA,GS(1-5)	S8,54,R5,32-36	RA(0-3)	RAU	0-9	RATI
OBSERVED CALL				OBS	S3,8	OBS			OBS

SHEET NOTES:

1. THE CONNECTION ESTABLISHED BY THE MARKER IS FROM THE LINE LINK LOCATION TO AN OUTGOING TRUNK. THE OPERATION OF THE LINE HOLD MAGNET IS SIMULATED IF THE NTC KEY IS NOT OPERATED. IF THE NTC KEY IS OPERATED, THE NO-TEST HOLD MAGNET IN THE ASSOCIATED HORIZONTAL GROUP IS OPERATED TO EXTEND THE CHANNEL CONNECTION BACK TO THE MASTER TEST CONTROL CIRCUIT.
2. USE FS AND TS RATHER THAN NTFS AND NTTS KEYS UNLESS TRUNK TO BE SELECTED IS MADE BUSY.
3. CONSULT JUNCTOR SEQUENCE TABLE ON C808 FOR SETTING OF JSQ KEY OR SWITCH FOR PARTICULAR JG- AND STP- DESIGNATIONS PERFORATED.
4. SG KEY OR SWITCH IS LOCATED ON AMRST PANEL AND IS USED ON A SENDER TYPE OF TEST (SFDC814) TO DIRECT THE MARKER TO A PARTICULAR SENDER GROUP.
5. THE OSS KEY OPERATED ENABLES THE MARKER TO SELECT A PARTICULAR SENDER CHOSEN BY THE SGA/B KEY AND OS- KEY OR SWITCH.
6. THE GS1-5 INDICATES THE GROUND SUPPLIES FROM WHICH THE CALL HAS ROUTE ADVANCED.
7. OBSERVE DRTO/I AND DR 0-9 AND CONSULT OFFICE RECORDS TO DETERMINE WHETHER RECORD WAS PRODUCED BY A COMPLETING MARKER.

ISSUE 3

SFD-10-01-C806

SIMULATION OF OUTGOING CALLS WHICH PRODUCE I/X SINGLE SIDED TROUBLE RECORD CARDS (E3638)

PROG. SIZE 6S

BELL TELEPHONE LABORATORIES INCORPORATED

PRINTED IN U.S.A.

CBL-266(10-75)

SFD-10-01-C806

SUBSCRIBER OUTGOING
I/X SINGLE SIDED TROUBLE CARD

E-3638 (11-71)

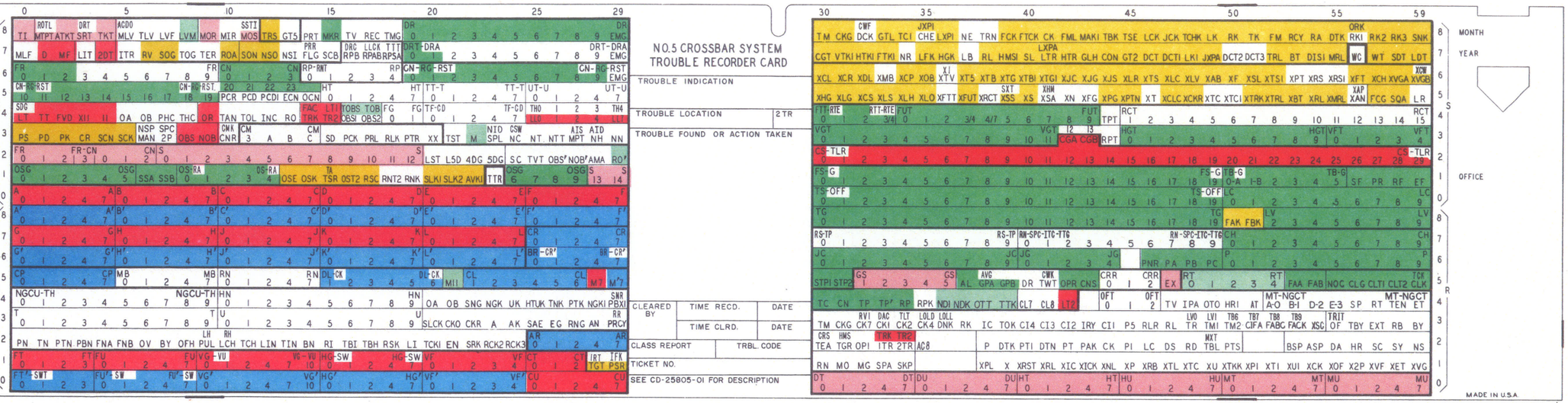

- MISCELLANEOUS
- INPUT TO MARKER
- CIRCUITS OR PATHS USED
- OUTPUT FROM MARKER TO OUTGOING SENDER
- PROGRESS AND TROUBLE INDICATIONS
- DESIGNATIONS WHICH MAY BE PERFORATED UNDER VARIOUS CONDITIONS

ISSUE 3

NO. 5 XBR I/X SINGLE SIDED TROUBLE RECORD CARD (E3638) INDICATING DESIGNATIONS WHICH MAY BE PERFORATED ON A SUBSCRIBER OUTGOING CALL

BELL TELEPHONE LABORATORIES INCORPORATED

DWG SIZE 6S

SFD-10-01-C807

PRINTED IN U.S.A.

E-7481 (10-71)

SFD-10-01-C807
7 SHEETS, SHEET 1

JUNCTOR SUBGROUP SELECTED (JG- DESIGNATION PERFORATED)

NUMBER OF TRUNK LINK FRAMES			JUNCTOR STEP POSITION (STP1 OR STP2)	JUNCTOR SEQUENCE (JSQ-)					
SINGLE	PAIRED	TRIPLED		0	1	2	3	4	5
2	4	6	1 2	JG0 JG3	JG1 JG4	JG2 JG3	JG0 JG4	JG1 JG3	JG2 JG4
2-3	4-6	6-9	1 2	JG0 JG1	JG1 JG2	JG2 JG0	JG0 JG1	JG1 JG2	JG2 JG0
3	6	9	1 2	JG0 JG3	JG1 JG3	JG2 JG3	JG0 JG3	JG1 JG3	JG2 JG3
4	8	12	1 2	JG0 JG2	JG1 JG2	JG0 JG2	JG1 JG2	JG0 JG2	JG1 JG2
5	10	15	1 2	JG0 JG1	JG1 JG0	JG0 JG1	JG1 JG0	JG0 JG1	JG1 JG0
6	12	18	1 2	JG0 JG1	JG0 ** JG1/2	* JG0/1 ** JG0/1	JG0 ** JG1/2	JG0 JG1	** JG0/1 ** JG0/2
7	14	21	1 2	JG0 JG1	JG0 ** JG1/2	JG0 JG1	JG0 ** JG1/2	JG0 JG1	** JG0/1 ** JG0/2
8	16	24	1 2	JG0 JG1	JG0 JG1	JG0 JG1	JG0 JG1	JG0 JG1	JG0 JG1
9	18	27	1 2	JG0 JG1	JG0 JG1	JG0 JG1	JG0 JG1	JG0 JG1	JG0 JG1
10	20	30	1	JG0	JG0	JG0	JG0	JG0	JG0

* JG0 DESIGNATION PERFORATED IF THREE JUNCTOR SUBGROUPS EXIST BETWEEN LINE LINK AND TRUNK LINK FRAMES.
JG1 DESIGNATION PERFORATED IF TWO JUNCTOR SUBGROUPS EXIST BETWEEN LINE LINK AND TRUNK LINK FRAMES.

** LOWER-NUMBERED JG- DESIGNATION PERFORATED IF TWO JUNCTOR SUBGROUPS EXIST BETWEEN LINE LINK AND TRUNK LINK FRAMES.
HIGHER-NUMBERED JG- DESIGNATION PERFORATED IF THREE JUNCTOR SUBGROUPS EXIST BETWEEN LINE LINK AND TRUNK LINK FRAMES.

AUTOMATIC TROUBLE ANALYSIS EXCEPTION REPORT					KEY(S) OR SWITCH(ES) USED TO SIMULATE TROUBLE RECORD			
FUNCTION			SEE NOTE	TTY OUTPUT	KEY DESIGNATION	SWITCH DESIGNATION	SWITCH POSITION	KEY DESIGNATION
TYPE OF CALL				SOG	ORIG/OGT/MISC/ITDO/SDR	TSTA	ORIG/SDR	
						TSTB	OGT/MISC/ITDO	
CLASS OF CALL		ORIG		OR		CL	OR-DP/MF	
		FACD		FAC	FACD		FAC-DP/MF	
TRANSLATOR CLASS		LT		LT		TRNA	LT	
		LTI		LTI	LTI		LTI	
		LT2		LT2	LT2		LT2	
		LT3		LT3	LT3		LT3	
		2DT		2DT	2DTO		2DT	
		XII		XII	XII		XII	
		II		II	II		II	
		FVD		FVD	FVDO		FVD	
MARKER				MKR CM				
		TENS	7	MKR.XX	MT(0-11)			MTTI
		UNITS				MTU	0-9	
CALLED DIGITS A-L(0-9)				DIG.XXXX____	A-L(0-9)	A-L	0-9	
LINE LOCATION	FRAME	TENS	1	FT.X	FT(0-5)	FT	0-5	
		UNITS		FU.X	FU(0-9)	FU	0-9	
	VERTICAL GROUP			VG.XX	VG(0-13)	VGU	0-9	VGTI
	HORIZONTAL GROUP			HG.X	HG(0-9)	HG	0-9	
	VERTICAL FILE			VF.X	VF(0-4)	VF	0-4	
CLASS OF SERVICE	30,60 OR 100 CLASSES	TENS		CT.X	CST(0-9)	CST	0-9	
		UNITS		CU.X	CSU(0-9)	CSU	0-9	
	60 CLASSES	0-29		CGA				
		30-59		CGB	CGB			CGB
RATE TREATMENT		TENS 0		CGA	CSGA			CSGA
		TENS 1		CGB	CSGB			CSGB
		UNITS		CRU.X	CRU(0-9)	CRU	0-9	
TRUNK LINK	FRAME	TENS		FS.XX	FG(0-2)			FG(0-2)
		UNITS			FS(0-9)	FS	0-9	
			2		FS OR NTFS			FS OR NTFS
TRUNK		TENS		TS.XX	TS(10-19)			TSTI
		UNITS			TS(0-9)	TSU	0-9	
			2		TS OR NTTS			TS OR NTTS
TRUNK ALLOTTER	GROUP A			GPA	GPA			GPA
	GROUP B			GPB	GPB			GPB
OUTGOING SENDER			5		OSS			OSS
	SENDER GROUP		4	OSG.X	SG(0-10)			SGT
						SG	0-10	
	GROUP A			SSA	SGA			SGA
	GROUP B			SSB	SGB			SGB
	SENDER			OS.X	OS(0-4)	OS	0-4	
CHANNEL				CH.X	CH(0-9)	CH	0-9	
JUNCTOR STEP				STPI/STP2	STPI/STP2			STPI/STP2
JUNCTOR GROUP			3	JG.X	JSQ(0-5)	JSQ	0-5	
ROUTE ADVANCE			6	GS.X	RA(0-3)	RAU	0-9	RATI
OBSERVED CALL				OBS	OBS			OBS

SHEET NOTES:

1. THE CONNECTION ESTABLISHED BY THE MARKER IS FROM THE LINE LINK LOCATION TO AN OUTGOING TRUNK. THE OPERATION OF THE LINE HOLD MAGNET IS SIMULATED IF THE NTC KEY IS NOT OPERATED. IF THE NTC KEY IS OPERATED, THE NO-TEST HOLD MAGNET IN THE ASSOCIATED HORIZONTAL GROUP IS OPERATED TO EXTEND THE CHANNEL CONNECTION BACK TO THE MASTER TEST CONTROL CIRCUIT.
2. USE FS AND TS RATHER THAN NTFS AND NTTS KEYS UNLESS TRUNK TO BE SELECTED IS MADE BUSY.
3. CONSULT JUNCTOR, SEQUENCE TABLE ON C808 FOR SETTING OF JSQ KEY OR SWITCH FOR PARTICULAR JG- AND STP- DESIGNATIONS.
4. SG KEY OR SWITCH IS LOCATED ON A AMRST PANEL AND IS USED ON A SENDER TYPE OF TEST (SFD C814) TO DIRECT THE MARKER TO A PARTICULAR SENDER GROUP.
5. THE OSS KEY OPERATED ENABLES THE MARKER TO SELECT A PARTICULAR SENDER CHOSEN BY THE SGA/B KEY AND OS- KEY OR SWITCH.
6. THE GS.X ENTRIES INDICATE THE GROUND SUPPLIES FROM WHICH THE CALL HAS ROUTE ADVANCED.
7. OBSERVE MKR.XX AND CONSULT OFFICE RECORDS TO DETERMINE WHETHER RECORD WAS PRODUCED BY A COMPLETING MARKER.

ISSUE 4

SIMULATION OF OUTGOING CALLS WHICH PRODUCE AN AUTOMATIC TROUBLE ANALYSIS EXCEPTION REPORT

SFD-10-01-C809

BELL TELEPHONE LABORATORIES INCORPORATED

DWG SIZE 6S

PRINTED IN U.S.A.

SFD-10-01-C809

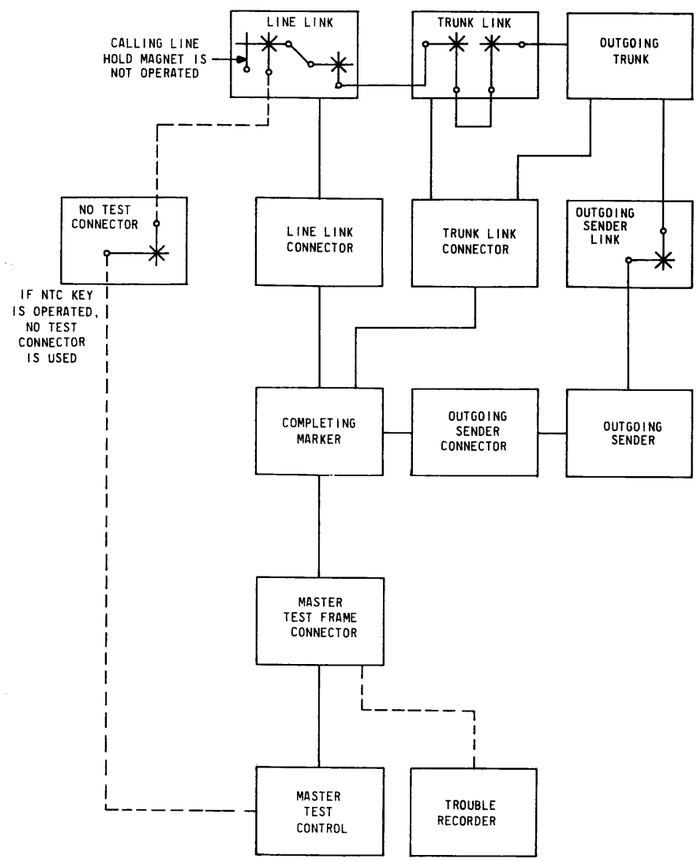

BSP 218-122-511, ISS 2
SD-25800-01 MASTER TEST CONTROL CIRCUIT (MTC)
SD-25918-01 TRUNK TEST CIRCUIT (TTC)

SHEET NOTES:

1. KEY(S) OR SWITCH(ES) THAT MUST BE OPERATED TO PERFORM THIS CLASS OF TEST.
2. KEY(S) OR SWITCH(ES) USED TO SIMULATE TROUBLE RECORD (SEE SFD-C802/C804/C806).
3. KEY(S) OR SWITCH(ES) WHICH MAY BE OPERATED TO CAUSE ADDITIONAL ACTIONS OR TEST VARIATIONS FOR THIS PARTICULAR TEST.

SD-25800-01

SEE NOTE	FIG. OR OPT	KEY OR SWITCH	FUNCTION
1	67	ORIG KEY	ORIGINATING ALLOWS TESTING A MARKER USING AN ORIGINATING CLASS OF CALL.
	74	TSTA SW (ORIG)	
1,2	17,WX	FACD KEY (OPR/N-OPR)	ORIGINATING/FOREIGN AREA CLASS WITH THE FACD KEY NORMAL OR THE CL SWITCH OPERATED TO OR-DP/MF, INDICATES A HOME OFFICE CODE. WITH THE FACD KEY OR CL SWITCH OPERATED TO FAC-DP/MF, INDICATES A FOREIGN AREA CODE.
	11,NQ	CL SW (OR-DP/MF/ FAC-DP/MF)	
	WW	NONE	
1,2	11,OX	2DTO KEY	TRANSLATOR CLASS OPERATE AS REQUIRED TO PRIME MARKER WITH NECESSARY ORIGINATING TRANSLATION FOR SELECTED ROUTE.
	17,NP	11/X11 KEY	
	17,SX	LT1 KEY	
	17,PH	LT2 KEY	
	11,EC	FVDO KEY	
	11,OY	LT3 KEY	
	NT, OW	LOC TRNSL (ALL KEYS NORMAL)	
	11,NQ	TRNA SW (LT/LT1/ LT2/LT3/ 2DT/X11/11/ FVD)	
1,2	19,21	MT (0-11) KEY	MARKER TEST DIRECTS THE MTFC TO CONNECT THIS TEST CIRCUIT (MTC) TO THE MARKER CORRESPONDING TO THE NUMBER OPERATED.
	52	MT SW (0-11)	
	81	MTU SW (0-9)	
		MTTI KEY	
1,2	4,KX	A-C (0-9) KEY	CALLED DIGITS (A-C) PRIMES THE MARKER WITH A THREE DIGIT AREA CODE OR THREE DIGIT OFFICE CODE.
	4,ZVL	A-C SW (0-9)	
1,2	4,KX	D(0-9) KEY	CALLED DIGITS (D-K) PRIMES THE MARKER WITH THE CALLED DIGITS.
	4,KY	E(0-9) KEY	
	4,KZ	F(0-9) KEY	
	4,JA	G(0-9) KEY	
	4,JB	H(0-9) KEY	
	4,JC	J(0-9) KEY	
	4,JD	K(0-9) KEY	
	4,ZVL	D-K SW (0-9)	

SD-25800-01

SEE NOTE	FIG. OR OPT	KEY OR SWITCH	FUNCTION
1,2	FIG. S	FT (0-3) KEY	FRAME TENS OPERATED TO TRANSMIT THE LINE LINK FRAME TENS DIGIT TO THE MARKER.
	FIG. T	FT (0-5) KEY	
	78	FT SW (0-5)	
1,2	6,KX	FU (0-9) KEY	FRAME UNITS OPERATED TO TRANSMIT THE LINE LINK FRAME UNITS DIGIT TO THE MARKER.
	6,ZWP, ZWQ	FU SW (0-9)	
1,2	6,KX	VG (0-9) KEY	VERTICAL GROUP OPERATED TO TRANSMIT THE VERTICAL GROUP TO THE MARKER.
	6,ZF	VG (10-13) KEY	
	6,JF	VGU SW (0-9)	
		VGTI KEY	
1,2	6,KX	HG (0-9) KEY	HORIZONTAL GROUP OPERATED TO TRANSMIT THE HORIZONTAL GROUP TO THE MARKER.
	6,JF	HG SW (0-9)	
1,2	6,RD	VF (0-4) KEY	VERTICAL FILE OPERATED TO TRANSMIT THE VERTICAL FILE TO THE MARKER.
	6,JF	VF SW (0-4)	
1,2	7,XA, XB,ZG	CST (0-2) KEY	CLASS OF SERVICE TENS CONTROLS THE CLASS-OF-SERVICE TENS DIGIT TRANSMITTED TO THE MARKER.
	7,XB	CST (0-9) KEY	
	7,JF	CST SW (0-9)	
1,2	7,JH, RY	CSU (0-9) KEY	CLASS OF SERVICE UNITS CONTROLS THE CLASS-OF-SERVICE UNITS DIGIT TRANSMITTED TO THE MARKER.
	7,JF	CSU SW (0-9)	
1,2	37, GC,GD	CGB KEY (OPR/N-OPR)	CLASS GROUP B USED WHEN OFFICE HAS A MAXIMUM OF 60 CLASSES OF SERVICE. SELECTS CLASS GROUP A WITH KEY IN NORMAL POSITION.
		NONE	
1,2	7,JI	CRU (0-9) KEY	CUSTOMER RATE TREATMENT UNITS PROVIDES RATE TREATMENT INFORMATION TO MARKER.
	7,JF	CRU SW (0-9)	
		NONE	NO RATE TREATMENT REQUIRED
1,2	7,ED	CSGA/ CSGB KEY	RATE TREATMENT GROUP A AND B CONTROLS THE RATE TREATMENT GROUP INDICATION TO MARKER
		NONE	NO RATE TREATMENT REQUIRED
1	1	ST/RL KEY	START AND RELEASE OPERATED TO ST INITIATES A TEST CALL. OPERATED TO RL CAUSES TEST CALL AND ALL ASSOCIATED CIRCUITS TO RELEASE.

ISSUE 4

SFD-10-01-C810

ORIGINATING CLASS OF MARKER TEST
OUTGOING CALL WITH OR WITHOUT SENDER

DWG SIZE 6S

BELL TELEPHONE LABORATORIES INCORPORATED

PRINTED IN U.S.A.

SFD-10-01-C810

SD-25800-01

*SEE NOTE	FIG.OR OPT	KEY OR SWITCH	FUNCTION
2	9	FS/ NTFS KEY	FRAME SELECTION/NO TEST FRAME SELECTION PERMITS SELECTION OF A PARTICULAR TRUNK LINK FRAME UNDER CONTROL OF THE FG(0-2) KEYS AND FS(0-9) KEYS OR SWITCH, WITH (FS KEY) OR WITHOUT (NTFS KEY), FIRST TESTING FOR IDLE TRUNKS ON THAT TRUNK LINK FRAME.
2	U	FG (0,1) KEY	TRUNK LINK FRAME GROUP USED IN CONJUNCTION WITH THE FS(0-9) KEYS OR SWITCH WHEN THE FS OR NTFS KEYS ARE OPERATED. INDICATES TENS DIGIT OF TRUNK LINK FRAME NUMBER.
	79	FG (0-2) KEY	
	80	FG (1,2) KEY	FOR FRAME GROUP 0, THE FG KEY SHOULD BE IN THE NORMAL POSITION
2	U, 79	FS (0-9) KEY	TRUNK LINK FRAME UNITS WITH FS KEY OPERATED, MAKES ALL TRUNK LINK FRAMES EXCEPT THAT CORRESPONDING TO THE OPERATED FS(0-9) ON FG(0-2) KEYS LOOK BUSY.
	80	FS SW (0-9)	
2	9	TS/ NTTS KEY	TRUNK SELECTION/NO TEST TRUNK SELECTION MAKES ALL TRUNKS EXCEPT THE ONE CORRESPONDING TO THE OPERATED TS(0-19) KEYS OR SWITCH LOOK BUSY TO THE MARKER AND IF NTTS KEY IS OPERATED, WILL OPERATE THE "TST" RELAY IN THE TLF WHICH REMOVES THE PLUGGED-BUSY CONDITION FROM ALL TRUNKS ON THAT TRUNK LINK FRAME.
2	9,KX	TS (0-19) KEY	TRUNK SELECTION MAKES ALL TRUNKS EXCEPT ONE CORRESPONDING TO THE OPERATED TS(0-9) KEY LOOK BUSY TO THE MARKER.
	9,JF	TSU SW (0-9)	TRUNK SELECTION UNITS SAME AS (TS0-19) KEY.
		TSTI KEY	TRUNK SELECTION TENS OPERATED WITH TSU SWITCH SELECTS PARTICULAR TRUNK.
2	8, 35	OSS KEY	OUTGOING SENDER SELECTION WITH THE SGA/SGB KEY OPERATED, DIRECTS THE MARKER TO CONNECT TO THE A OR B SUBGROUP OF SENDERS WITHOUT FIRST TESTING FOR AN IDLE SENDER.
2	8, 35	SGA/ SGB KEY	SENDER SUBGROUP A/SENDER SUBGROUP B WITH THE OSS KEY ALSO OPERATED, DIRECTS THE MARKER TO CONNECT TO THE A OR B SUBGROUP OF SENDERS WITHOUT FIRST TESTING FOR IDLE SENDERS.
2	8, 83	OS (0-4) KEY	OUTGOING SENDER SELECTS A PARTICULAR SENDER WITHIN A SUBGROUP
	84	OS SW (0-4)	
2	10	STP1/ STP2 KEY	JUNCTOR SEQUENCE STEP WITH STP1 KEY OPERATED, ALLOWS MARKER TO MAKE CHANNEL SELECTION IN JUNCTOR GROUP STEP 1, BUT IF NO CHANNEL IS AVAILABLE AND MARKER ADVANCES TO STEP 2, MAKES ALL WITH STP2 KEY OPERATED, MAKES ALL CHANNELS LOOK BUSY IN JUNCTOR GROUP STEP 1, CAUSING MARKER TO ADVANCE TO STEP 2 WHERE IT IS ALLOWED TO MAKE CHANNEL SELECTION.
2	10, FS, FT	CH (0-9) KEY	CHANNEL BLANKS OUT ALL BUT THE DESIRED CHANNEL.
	10, EA	CH SW (0-9)	

* SEE SHEET C810 FOR SHEET NOTES.

SD-25800-01

*SEE NOTE	FIG.OR OPT	KEY OR SWITCH	FUNCTION
2	9,QE	RA (0-3) KEY	ROUTE ADVANCE ALLOWS THE MARKER TO FIND AN IDLE TRUNK ONLY AFTER IT HAS ROUTE ADVANCED EXACTLY THE NUMBER OF TIMES CORRESPONDING TO KEY OR SWITCH SETTING.
	9,QF	RA SW (0-5)	
	9,IB	RA SW (0-11)	
	9,CG	RAU SW (0-9)	
	9/99, DL	RATI KEY	
2	10, KX	JSQ (0-5) KEY	JUNCTOR SEQUENCE RESETS THE JUNCTOR SEQUENCE WALKING RELAYS OF THE MARKER TO A DESIRED WALKING POSITION. REFER TO C808 FOR SETTINGS.
	10, JF	JSQ (0-5) SW	
3	1	REC KEY	RECORD CAUSES MARKER TO REQUEST A TROUBLE RECORD OF THE TEST CALL BEFORE RELEASING.
3	14	NTC KEY	NO TEST CONNECTOR CAUSES THE MARKER TO USE A NO TEST VERTICAL AS THE ORIGINATING LINE FOR THE TEST.
3	129, ZQY, ZQO	OBS KEY	OBSERVED GROUNDS THE OBST LEAD INSTEAD OF NOBT TO SIMULATE AN ORIGINATING REGISTER ON AN OBSERVED CALL.
3	17,US VM	TOBS KEY	TRUNK OBSERVING PROVIDES PATH FOR OPERATING TOBS RELAY IN MARKER
3	17, US	FAD/ HFA KEY	FOREIGN AREA DIALED/HOME AND FOREIGN AREA EFFECTIVE WHEN TOBS KEY OPERATED. KEY NORMAL, GIVES A FOREIGN-AREA-DIALING INDICATION TO MARKER. KEY OPERATED, GIVES A HOME AND FOREIGN-AREA-DIALING INDICATION TO MARKER.
3	17	TP/ PMM KEY	TIP PARTY/PARTY MISMATCH TP KEY OPERATED SIGNALS THE MARKER THAT A TIP PARTY CALL IS BEING HANDLED. PMM KEY OPERATED SIGNALS THE MARKER OF A PARTY MISMATCH.
3	17, ZWM	PS KEY	PERMANENT SIGNAL SIGNALS THE MARKER THAT IT IS HANDLING A PERMANENT SIGNAL CALL.
3	17, ZWM	PD KEY	PARTIAL DIAL SIGNALS THE MARKER THAT IT IS HANDLING A PARTIAL DIAL CALL.
3	17	CNR KEY	COIN RETURN SIGNALS THE MARKER THAT THE COIN WAS RETURNED BY THE OR. USED IN SETTING UP TRUNKS HAVING NO COIN RETURN FEATURES OF THEIR OWN.
3	17,K	SCN KEY	STUCK COIN SIGNALS THE MARKER THAT THERE IS A STUCK COIN.
3	7,WR	HTR/ TC KEY	HEAVY TRAFFIC/TEST CONTINUITY. HTR SIGNALS MARKER TO FUNCTION ON A HEAVY TRAFFIC BASIS. WITH TC KEY OPERATED, APPLIES A POSITIVE POLARITY AS THE DC COMPONENT OF THE CURRENT FLOW TEST OF THE MARKER CONTINUITY FEATURE. KEY NORMAL, APPLIES A NEGATIVE DC COMPONENT.
3	15, ZL	TCT KEY	TEST CONTINUITY TUBE CONTROLS THE TEST APPLIED TO THE MARKER VACUUM TUBES IN THE CONTINUITY TEST FEATURE SO THAT THIS MAY BE LIMITED AS TO RINGING VOLTAGE.
	15, ZM	LGT KEY	LOOP GROUND TEST KEY NORMAL, CAUSES GROUND TEST TO BE APPLIED TO THE TIP. LGT KEY OPERATED, CAUSES GROUND TESTS TO BE APPLIED BY LOOPING THE TIP AND RING.
3	15	CON/ RV KEY	CONTINUITY/REVERSE CON KEY OPERATED, APPLIES A LOOP CONTINUITY TEST TO THE MARKER CON TUBE. WITH THE RV KEY-OPERATED, TRANSFERS THE CONTINUITY TEST FEATURE FROM THE RING TO THE TIP.

SD-25800-01

*SEE NOTE	FIG.OR OPT	KEY OR SWITCH	FUNCTION
3	15	FCG KEY	FALSE CROSS AND GROUND APPLIES AN OPERATE TEST TO THE MARKER FCG RELAY.
3	15	LB/ XLH KEY	LINE BUSY/CROSSED LINE HOLD MAGNET WITH LB KEY OPERATED, MAKES ANY LINE APPEAR BUSY TO MARKER BY CAUSING THE LHMT LEAD TO BE GROUNDED UPON RECEIVING A GROUND FROM THE MARKER ON THE HGK LEAD. XLH KEY OPERATED, SHUNTS THE LHM RELAY WITH 3000-OHMS TO SIMULATE A CONDITION SIMILAR TO CROSSED-LINE HOLD MAGNETS.
3	15	LBL KEY	LINE BUSY AT LINE LINK LBL KEY OPERATED, MAKES ANY LINE APPEAR BUSY TO THE MARKER BY CAUSING THE LHMT LEAD TO BE GROUNDED TO THE MARKER UPON RECEIVING A GROUND ON THE HGK LEAD.
3	1, ZWB, ZWC	TR2/ TRS KEY	SECOND TRIAL/TRANSFER START WITH KEY NORMAL, SIGNALS MARKER TO FUNCTION ON A FIRST TRIAL BASIS. WHEN OPERATED, TR2 KEY SIGNALS MARKER TO FUNCTION ON SECOND TRIAL BASIS. TRS KEY OPERATED, SIGNALS THE MARKER THAT THERE WAS A CONNECTOR START TRANSFER.
2	9	GPA/ GPB KEY	ALLOTTER GROUP A AND B USED ON TESTS REQUIRING THE MARKER TO USE A ROUTE WHICH HAS ALLOTTED TRUNK GROUPS.

ISSUE 3

ORIGINATING CLASS OF MARKER TEST

OUTGOING CALL WITH OR WITHOUT SENDER

SFD-10-01-C811

BELL TELEPHONE LABORATORIES INCORPORATED

DRAWING SIZE 6S

PRINTED IN U.S.A.

SFD-10-01-C811

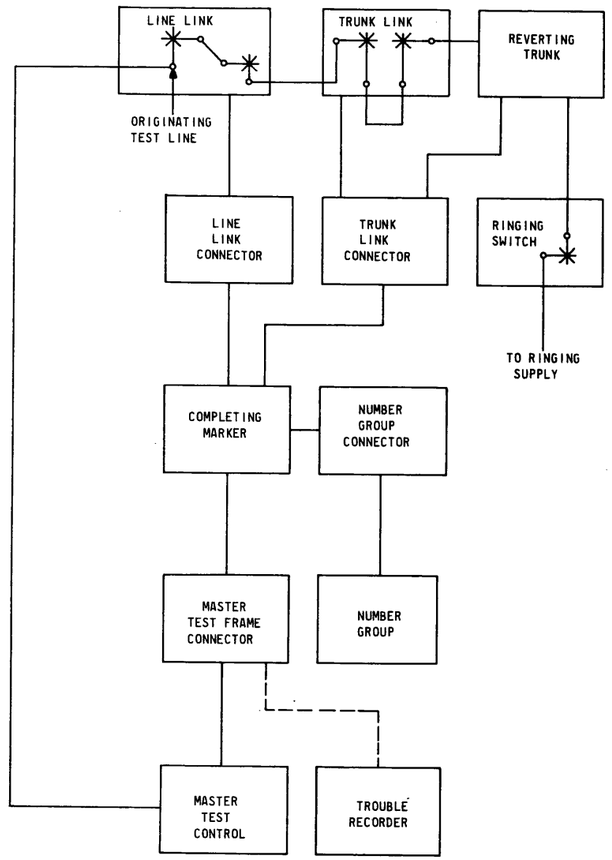

BSP 218-122-504, ISS 2
SD-25800-01, MASTER TEST CONTROL CIRCUIT

THIS TEST CHECKS THAT THE MARKER COMPLETES A CALL TO A CALLED CUSTOMER ON THE SAME LINE AS THE CALLING CUSTOMER.

SHEET NOTES:

1. KEY(S) OR SWITCH(ES) THAT MUST BE OPERATED TO PERFORM THIS CLASS OF TEST.
2. KEY(S) OR SWITCH(ES) USED TO SIMULATE TROUBLE RECORD (SEE SFD-C802/C804/C806).
3. KEY(S) OR SWITCH(ES) WHICH MAY BE OPERATED TO CAUSE ADDITIONAL ACTIONS OR TEST VARIATIONS FOR THIS PARTICULAR TEST.

SD-25800-01

SEE NOTE	FIG. OR OPT	KEY OR SWITCH	FUNCTION
1	67	ORIG KEY	ORIGINATING ALLOWS TESTING A MARKER USING AN ORIGINATING CLASS OF CALL.
	74	TSTA SW (ORIG)	
1,2	17,WX	FACD KEY (N-OPR)	ORIGINATING CLASS WITH THE FACD KEY NORMAL OR THE CL SWITCH OPERATED TO OR-DP/MF, INDICATES A HOME OFFICE CODE.
	11,NQ	CL SW (OR-DP/MF)	
	WW	NONE	
1,2	NT,OW	LOC TRNSL (ALL KEYS NORMAL)	TRANSLATOR CLASS USE LOCAL TRANSLATION.
	11,NQ	TRNA SW (LT)	
1,2	19,21	MT (0-11) KEY	MARKER TEST DIRECTS THE MTFC TO CONNECT THIS TEST CIRCUIT (MTC) TO THE MARKER CORRESPONDING TO THE NUMBER OPERATED.
	52	MT SW (0-11)	
	81	MTU SW (0-9)	
		MTTI KEY	
1,2	4,KX	A-C (0-9) KEY	CALLED DIGITS (A-C) PRIMES THE MARKER WITH THREE DIGIT INTRAOFFICE CODE.
	4,ZVL	A-C SW (0-9)	
1,2	4,KX	D(0-9) KEY	CALLED DIGITS (D-G) PRIMES THE MARKER WITH THE CALLED DIGITS ASSOCIATED WITH THE LINE LOCATION SELECTED.
	4,KY	E(0-9) KEY	
	4,KZ	F(0-9) KEY	
	4,JA	G(0-9) KEY	
	4,ZVL	D-G SW (0-9)	
1,2	FIG. S	FT (0-3) KEY	FRAME TENS OPERATED TO TRANSMIT THE LINE LINK FRAME TENS DIGIT TO THE MARKER. NOTE: SELECT LINE LOCATION ASSOCIATED WITH CALLED NUMBER.
	FIG. T	FT (0-5) KEY	
	78	FT SW (0-5)	
1,2	6,KX	FU (0-9) KEY	FRAME UNITS OPERATED TO TRANSMIT THE LINE LINK FRAME UNITS DIGIT TO THE MARKER.
	6,ZWP, ZWQ	FU SW (0-9)	
1,2	6,KX	VG (0-9) KEY	VERTICAL GROUP OPERATED TO TRANSMIT THE VERTICAL GROUP TO THE MARKER.
	6,ZF	VG (10-13) KEY	
	6,JF	VGU SW (0-9)	
		VGTI KEY	

SD-25800-01

SEE NOTE	FIG. OR OPT	KEY OR SWITCH	FUNCTION
1,2	6,KX	HG (0-9) KEY	HORIZONTAL GROUP OPERATED TO TRANSMIT THE HORIZONTAL GROUP TO THE MARKER.
	6,JF	HG SW (0-9)	
1,2	6,RD	VF (0-4) KEY	VERTICAL FILE OPERATED TO TRANSMIT THE VERTICAL FILE TO THE MARKER.
	6,JF	VF SW (0-4)	
1,2	7,XA, XB,ZG	CST (0-2) KEY	CLASS OF SERVICE TENS CONTROL THE CLASS-OF-SERVICE TENS DIGIT TRANSMITTED TO THE MARKER. NOTE: SELECT CLASS OF SERVICE AND RATE TREATMENT OF LINE LOCATION SELECTED.
	7,XB	CST (0-9) KEY	
	7,JF	CST SW (0-9)	
1,2	7,JH, RY	CSU (0-9) KEY	CLASS OF SERVICE UNITS CONTROL THE CLASS-OF-SERVICE UNITS DIGIT TRANSMITTED TO THE MARKER.
	7,JF	CSU SW (0-9)	
1,2	37, GC,GD	CGB KEY (OPR/N-OPR)	CLASS GROUP B USED WHEN OFFICE HAS A MAXIMUM OF 60 CLASSES OF SERVICE. SELECTS CLASS GROUP A WITH KEY IN NORMAL POSITION.
		NONE	
1,2	7,JI	CRU (0-9) KEY	CUSTOMER RATE TREATMENT UNITS PROVIDE RATE TREATMENT INFORMATION TO MARKER.
	7,JF	CRU SW (0-9)	
		NONE	NO RATE TREATMENT REQUIRED.
1,2	7,ED	CSGA/ CSGB KEY	RATE TREATMENT GROUP A AND B CONTROLS THE RATE TREATMENT GROUP INDICATION TO MARKER.
		NONE	NO RATE TREATMENT REQUIRED.
1	1	ST/RL KEY	START AND RELEASE OPERATED TO ST INITIATES A TEST CALL. OPERATED TO RL CAUSES TEST CALL AND ALL ASSOCIATED CIRCUITS TO RELEASE.
3	1	REC KEY	RECORD CAUSES MARKER TO REQUEST A TROUBLE RECORD OF THE TEST CALL BEFORE RELEASING.

ISSUE 4

SFD-10-01-C812

ORIGINATING CLASS OF MARKER TEST
REVERTING TYPE CALL

PRINTED IN U. S. A.

DWG SIZE 6S

BELL TELEPHONE LABORATORIES INCORPORATED

E-74811-L (4-73)

SFD-10-01-C812

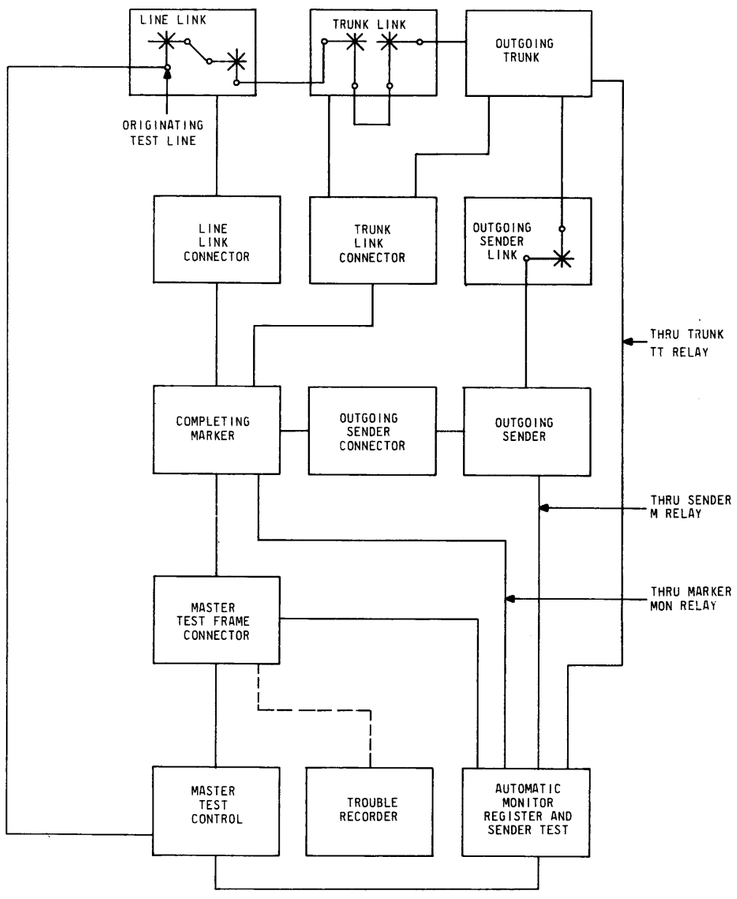

BSP 218-150-501, ISS 7 (DP)
BSP 218-156-501, ISS 10 (MF)
SD-25800-01, MASTER TEST CONTROL CIRCUIT (MTC)
SD-25680-01, AUTOMATIC MONITOR REGISTER AND SENDER TEST CIRCUIT (AMRST)

SHEET NOTES:

1. KEY(S) OR SWITCH(ES) THAT MUST BE OPERATED TO PERFORM THIS CLASS OF TEST.
2. KEY(S) OR SWITCH(ES) USED TO SIMULATE TROUBLE RECORD (SEE SFD-C802/C804/C806).
3. KEY(S) OR SWITCH(ES) WHICH MAY BE OPERATED TO CAUSE ADDITIONAL ACTIONS OR TEST VARIATIONS FOR THIS PARTICULAR TEST.
4. KEY(S) OR SWITCH(ES) LOCATED ON AMRST PANEL.

SD-25800-01

SEE NOTE	FIG.OR OPT	KEY OR SWITCH	FUNCTION
1	67	SDR KEY	SENDER CLASS TEST CAUSES TEST CIRCUIT (MTC) TO CONNECT TO THE AUTOMATIC MONITOR REGISTER AND SENDER TEST CIRCUIT FOR THE PURPOSE OF TESTING THE SENDER SELECTED.
	74	TSTA SW (SDR)	
1,2	17,WX	FACD KEY (OPR/N-OPR)	ORIGINATING/FOREIGN AREA CLASS WITH THE FACD KEY NORMAL OR THE CL SWITCH OPERATED TO OR-DP/MF, INDICATES A HOME OFFICE CODE. WITH THE FACD KEY OR CL SWITCH OPERATED TO FAC-DP/MF, INDICATES A FOREIGN AREA CODE.
	11,NQ	CL SW (OR-DP/MF/ FAC-DP/MF	
	WW	NONE	
1,2	11,OX	2DTO KEY	TRANSLATOR CLASS OPERATE AS REQUIRED TO PRIME MARKER WITH NECESSARY ORIGINATING TRANSLATION FOR SELECTED ROUTE.
	17,NP	11/X11 KEY	
	17,SX	LT1 KEY	
	17,PH	LT2 KEY	
	11,EC	FVDO KEY	
	11,OY	LT3 KEY	
	NT,OW	LOC TRNSL (ALL KEYS NORMAL)	
	11,NQ	TRNA SW (LT/LT1/ LT2/LT3/ 2DT/X11/11/ FVD)	
1,2	19,21	MT (0-11) KEY	MARKER TEST DIRECTS THE MTFC TO CONNECT THIS TEST CIRCUIT (MTC) TO THE MARKER CORRESPONDING TO THE NUMBER OPERATED.
	52	MT SW (0-11)	
	81	MTU SW (0-9)	
		MTTI KEY	
1,2	4,KX	A-C (0-9) KEY	CALLED DIGITS (A-C) PRIMES THE MARKER WITH A THREE DIGIT AREA CODE OR THREE DIGIT OFFICE CODE.
	4,KZL, ZVM	A-C SW (0-9)	
1,2	4,KX	D(0-9) KEY	CALLED DIGITS (D-K) PRIMES THE MARKER WITH THE CALLED DIGITS.
	4,KY	E(0-9) KEY	
	4,KZ	F(0-9) KEY	
	4,JA	G(0-9) KEY	
	4,JB	H(0-9) KEY	
	4,JC	J(0-9) KEY	
	4,JD	K(0-9) KEY	
	4,ZVL, ZVM	D-K SW (0-9)	

SD-25800-01

SEE NOTE	FIG.OR OPT	KEY OR SWITCH	FUNCTION
1,2, 4		SG (0-10) KEY	SENDER GROUP SELECTS ANY ONE OF ELEVEN OF THE POSSIBLE TWELVE SENDER GROUPS.
		SG SEL SW (0-10)	
		SGT KEY	SENDER GROUP TENS SELECTS THE TWELFTH SENDER GROUP.
1	8, 35	OSS KEY	OUTGOING SENDER SELECTION WITH THE SGA/SGB KEY OPERATED, DIRECTS THE MARKER TO CONNECT TO THE A OR B SUBGROUP OF SENDERS WITHOUT FIRST TESTING FOR AN IDLE SENDER.
1,2	8, 35	SGA/ SGB KEY	SENDER SUBGROUP A/SENDER SUBGROUP B WITH THE OSS KEY ALSO OPERATED, DIRECTS THE MARKER TO CONNECT TO THE A OR B SUBGROUP OF SENDERS WITHOUT FIRST TESTING FOR IDLE SENDERS.
1,2	8, 83	OS (0-4) KEY	OUTGOING SENDER SELECTS A PARTICULAR SENDER WITHIN A SUBGROUP.
	84	OS SW (0-4)	
1,4		MAC KEY	MONITOR AC ALLOWS ENERGIZING FILAMENTS OF VACUUM TUBES IN AUTOMATIC MONITOR.
1,4		STT KEY	START TEST OPERATED TO STT,CONDITIONS AUTOMATIC MONITOR FOR START OF TESTING.
1,2	7,XA, XB,ZG	CST (0-2) KEY	CLASS OF SERVICE TENS CONTROLS THE CLASS-OF-SERVICE TENS DIGIT TRANSMITTED TO THE MARKER.
	7,XB	CST (0-9) KEY	
	7,JF	CST SW (0-9)	
1,2	7,JH, RY	CSU (0-9) KEY	CLASS OF SERVICE UNITS CONTROLS THE CLASS-OF-SERVICE UNITS DIGIT TRANSMITTED TO THE MARKER.
	7,JF	CSU SW (0-9)	
1,2	37 GC,GD	CGB KEY (OPR/N-OPR)	CLASS GROUP B USED WHEN OFFICE HAS A MAXIMUM OF 60 CLASSES OF SERVICE. SELECTS CLASS GROUP A WITH KEY IN NORMAL POSITION.
		NONE	
1,2	7,JI	CRU (0-9) KEY	CUSTOMER RATE TREATMENT UNITS PROVIDES RATE TREATMENT INFORMATION TO MARKER.
	7,JF	CRU SW (0-9)	
		NONE	NO RATE TREATMENT REQUIRED.
1,2	7,ED	CSGA/ CSGB KEY	RATE TREATMENT GROUP A AND B CONTROLS THE RATE TREATMENT GROUP INDICATION TO MARKER.
		NONE	NO RATE TREATMENT REQUIRED.
1	1	ST/RL KEY	START AND RELEASE OPERATED TO ST INITIATES A TEST CALL. OPERATED TO RL CAUSES TEST CALL AND ALL ASSOCIATED CIRCUITS TO RELEASE.

ISSUE 4

SFD-10-01-C814

SENDER CLASS OF TEST
DP, MF SENDER

DWG SIZE 6S

BELL TELEPHONE LABORATORIES INCORPORATED

PRINTED IN U. S. A.

E-7481-L (4-72)

SFD-10-01-C814

SD-25800-01

*SEE NOTE	FIG. OR OPT	KEY OR SWITCH	FUNCTION
3	13	ND KEY	NO DIGITS GROUNDS THE NDI LEAD TO THE MARKER TO SIGNAL THE MARKER TO SET THE OUTGOING SENDER TO RELEASE WITHOUT PULSING.
3	17	ROT KEY	REORDER TEST SETS UP REORDER IN THE SENDER.
3	3	REP KEY	REPEAT TEST CAUSES SENDER TESTS TO BE REPEATED UPON RECEIVING A SIGNAL FROM THE AMRST TO THE MASTER TEST CONTROL, THAT A TEST HAS BEEN COMPLETED SATISFACTORILY
2	9	FS/ NTFS KEY	FRAME SELECTION/NO TEST FRAME SELECTION PERMITS SELECTION OF A PARTICULAR TRUNK LINK FRAME UNDER CONTROL OF THE FG(0-2) KEYS AND FS(0-9) KEYS OR SWITCH, WITH (FS KEY) OR WITHOUT (NTFS KEY), FIRST TESTING FOR IDLE TRUNKS ON THAT TRUNK LINK FRAME.
2	U	FG (0,1) KEY	TRUNK LINK FRAME GROUP USED IN CONJUNCTION WITH THE FS(0-9) KEYS OR SWITCH WHEN THE FS OR NTFS KEYS ARE OPERATED. INDICATES TENS DIGIT OF TRUNK LINK FRAME NUMBER.
	79	FG (0-2) KEY	
	80	FG (1,2) KEY	FOR FRAME GROUP 0, THE FG KEY SHOULD BE IN THE NORMAL POSITION
2	U, 79	FS (0-9) KEY	TRUNK LINK FRAME UNITS WITH FS KEY OPERATED, MAKES ALL TRUNK LINK FRAMES EXCEPT THAT CORRESPONDING TO THE OPERATED FS(0-9) ON FG(0-2) KEYS LOOK BUSY.
	80	FS SW (0-9)	
2	9	TS/ NTTS KEY	TRUNK SELECTION/NO TEST TRUNK SELECTION MAKES ALL TRUNKS EXCEPT THE ONE CORRESPONDING TO THE OPERATED TS(0-19) KEYS OR SWITCH LOOK BUSY TO THE MARKER AND IF NTTS KEY IS OPERATED, WILL OPERATE THE "TST" RELAY IN THE TLF WHICH REMOVES THE PLUGGED-BUSY CONDITION FROM ALL TRUNKS ON THAT TRUNK LINK FRAME.
2	9,KX	TS (0-19) KEY	TRUNK SELECTION MAKES ALL TRUNKS EXCEPT ONE CORRESPONDING TO THE OPERATED TS(0-9) KEY LOOK BUSY TO THE MARKER.
	9,JF	TSU SW (0-9)	TRUNK SELECTION UNITS SAME AS (TS0-19) KEY.
		TSTI KEY	TRUNK SELECTION TENS OPERATED WITH TSU SWITCH SELECTS PARTICULAR TRUNK.
2	9,QE	RA (0-3) KEY	ROUTE ADVANCE ALLOWS THE MARKER TO FIND AN IDLE TRUNK ONLY AFTER IT HAS ROUTE ADVANCED EXACTLY THE NUMBER OF TIMES CORRESPONDING TO KEY OR SWITCH SETTING.
	9,QF	RA SW (0-5)	
	9,IB	RA SW (0-11)	
	9,CG	RAU SW (0-9)	
	9/99, DL	RATI KEY	
3	1	REC KEY	RECORD CAUSES MARKER TO REQUEST A TROUBLE RECORD OF THE TEST CALL BEFORE RELEASING.

* SEE SHEET C814 FOR SHEET NOTES

ISSUE 3

SENDER CLASS OF TEST
DP,MF SENDER

SFD-10-01-C815

BELL TELEPHONE LABORATORIES INCORPORATED

DWG SIZE 6S

PRINTED IN U.S.A.

SFD-10-01-C815

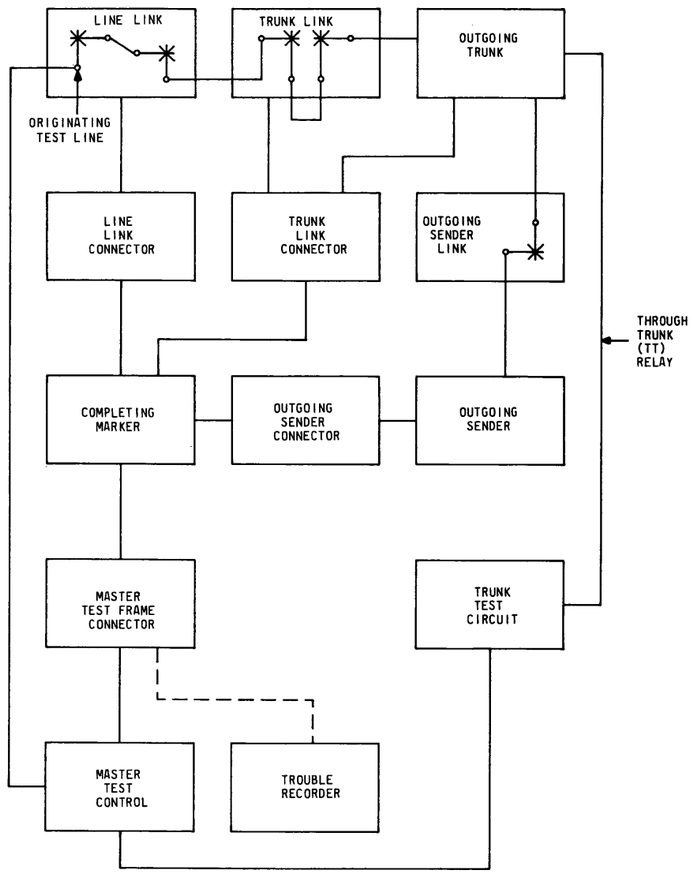

BSP 218-271-501,ISS 8
SD-25800-01 MASTER TEST CONTROL CIRCUIT (MTC)
SD-25918-01 TRUNK TEST CIRCUIT (TTC)

SHEET NOTES:

1. KEY(S) OR SWITCH(ES) THAT MUST BE OPERATED TO PERFORM THIS CLASS OF TEST.
2. KEY(S) OR SWITCH(ES) USED TO SIMULATE TROUBLE RECORD (SEE SFD-C802/C804/C806).
3. KEY(S) OR SWITCH(ES) WHICH MAY BE OPERATED TO CAUSE ADDITIONAL ACTIONS OR TEST VARIATIONS FOR THIS PARTICULAR TEST.
4. KEY(S) OR SWITCH(ES) LOCATED ON AMRST PANEL.

SD-25800-01

SEE NOTE	FIG.OR OPT	KEY OR SWITCH	FUNCTION
1	68	OGT KEY	OUTGOING CLASS OF TRUNK TEST CAUSES THE TEST CIRCUIT TO CONNECT TO THE TRUNK TEST CIRCUIT AND THEN TO A MARKER THROUGH THE MASTER TEST FRAME CONNECTOR CIRCUIT IN ORDER TO DIRECT THE MARKER TO SET UP A TEST CONNECTION TO THE OUTGOING TRUNK UNDER TEST.
	74	TSTB SW (OGT)	
1,2	17,WX	FACD KEY (OPR/N-OPR)	ORIGINATING/FOREIGN AREA CLASS WITH THE FACD KEY NORMAL OR THE CL SWITCH OPERATED TO OR-DP/MF, INDICATES A HOME OFFICE CODE. WITH THE FACD KEY OR CL SWITCH OPERATED TO FAC-DP/MF, INDICATES A FOREIGN AREA CODE.
	11,NQ	CL SW (OR-DP/MF/ FAC-DP/MF)	
	WW	NONE	
1,2	11,OX	2DTO KEY	TRANSLATOR CLASS OPERATE AS REQUIRED TO PRIME MARKER WITH NECESSARY ORIGINATING TRANSLATION FOR SELECTED ROUTE.
	17,NP	11/X11 KEY	
	17,SX	LT1 KEY	
	17,PH	LT2 KEY	
	11,EC	FVDO KEY	
	11,OY	LT3 KEY	
	NT,OW	LOC TRNSL (ALL KEYS NORMAL)	
	11,NQ	TRNA SW (LT/LT1/LT2/ LT3/2DT/ X11/11/FVD)	
1,2	19,21	MT (0-11) KEY	MARKER TEST DIRECTS THE MTFC TO CONNECT THIS TEST CIRCUIT (MTC) TO THE MARKER CORRESPONDING TO THE NUMBER OPERATED.
	52	MT SW (0-11)	
	81	MTU SW (0-9)	
		MTTI KEY	
1,2	4,KX	A-C (0-9) KEY	CALLED DIGITS (A-C) PRIMES THE MARKER WITH A THREE DIGIT AREA CODE OR THREE DIGIT OFFICE CODE.
	4,ZVL	A-C SW (0-9)	
1,2	4,KX	D(0-9) KEY	CALLED DIGITS (D-K) PRIMES THE MARKER WITH THE CALLED DIGITS.
	4,KY	E(0-9) KEY	
	4,KZ	F(0-9) KEY	
	4,JA	G(0-9) KEY	
	4,JB	H(0-9) KEY	
	4,JC	J(0-9) KEY	
	4,JD	K(0-9) KEY	
	4,ZVL	D-K SW (0-9)	
1,2	7.XA, XB,ZG	CST (0-2) KEY	CLASS OF SERVICE TENS CONTROLS THE CLASS-OF-SERVICE TENS DIGIT TRANSMITTED TO THE MARKER.
	7,XB	CST (0-9) KEY	
	7,JF	CST SW (0-9)	

SD-25800-01

SEE NOTE	FIG.OR OPT	KEY OR SWITCH	FUNCTION
1,2	7,JH, RY	CSU (0-9) KEY	CLASS OF SERVICE UNITS CONTROLS THE CLASS-OF-SERVICE UNITS DIGIT TRANSMITTED TO THE MARKER.
	7,JF	CSU SW (0-9)	
1,2	37, GC,GD	CGB KEY (OPR/N-OPR)	CLASS GROUP B USED WHEN OFFICE HAS A MAXIMUM OF 60 CLASSES OF SERVICE. SELECTS CLASS GROUP A WITH KEY IN NORMAL POSITION.
		NONE	
1,2	7,JI	CRU (0-9) KEY	CUSTOMER RATE TREATMENT UNITS PROVIDES RATE TREATMENT INFORMATION TO MARKER.
	7,JF	CRU SW (0-9)	
		NONE	NO RATE TEATMENT REQUIRED.
1,2	7,ED	CSGA/ CSGB KEY	RATE TREATMENT GROUP A AND B CONTROLS THE RATE TREATMENT GROUP INDICATION TO MARKER.
		NONE	NO RATE TREATMENT REQUIRED.
1	4	KY KEY	CONNECT NUMBER ALLOWS ANY NUMBER ON KEYS OR SWITCHES A(0-9) THRU L(0-9) TO BE TRANSMITTED TO THE MARKER.
1		TLK KEY	TALK USED TO COMPLETE TIP AND RING LEADS TO SIMULATE LINE AT MTF JACK,LAMP AND KEY CIRCUIT. TLK KEY LOC ON TRUNK TEST PANEL.
1	1	ST/RL KEY	START AND RELEASE OPERATED TO ST INITIATES A TEST CALL. OPERATED TO RL CAUSES TEST CALL AND ALL ASSOCIATED CIRCUITS TO RELEASE.
2	9	FS/ NTFS KEY	FRAME SELECTION/NO TEST FRAME SELECTION PERMITS SELECTION OF A PARTICULAR TRUNK LINK FRAME UNDER CONTROL OF THE FG(0-2) KEYS AND FS(0-9) KEY OR SWITCH, WITH (FS KEY) OR WITHOUT (NTFS KEY), FIRST TESTING FOR IDLE TRUNKS ON THAT TRUNK LINK FRAME.
2	U	FG (0,1) KEY	TRUNK LINK FRAME GROUP USED IN CONJUNCTION WITH THE FS(0-9) KEYS OR SWITCH WHEN THE FS OR NTFS KEYS ARE OPERATED. INDICATES TENS DIGIT OF TRUNK LINK FRAME NUMBER.
	79	FG (0-2) KEY	
	80	FG (1,2) KEY	FOR FRAME GROUP 0, THE FG KEY SHOULD BE IN THE NORMAL POSITION.
2	U, 79	FS (0-9) KEY	TRUNK LINK FRAME UNITS WITH FS KEY OPERATED, MAKES ALL TRUNK LINK FRAMES EXCEPT THAT CORRESPONDING TO THE OPERATED FS(0-9) ON FG(0-2) KEYS LOOK BUSY.
	80	FS SW (0-9)	
2	9	TS/ NTTS KEY	TRUNK SELECTION/NO TEST TRUNK SELECTION MAKES ALL TRUNKS EXCEPT THE ONE CORRESPONDING TO THE OPERATED TS(0-19) KEYS OR SWITCH LOOK BUSY TO THE MARKER AND IF NTTS KEY IS OPERATED, WILL OPERATE THE "TST" RELAY IN THE TLF WHICH REMOVES THE PLUGGED-BUSY CONDITION FROM ALL TRUNKS ON THAT TRUNK LINK FRAME.
2	9,KX	TS (0-19) KEY	TRUNK SELECTION MAKES ALL TRUNKS EXCEPT ONE CORRESPONDING TO THE OPERATED TS(0-9) KEY LOOK BUSY TO THE MARKER.
	9,JF	TSU SW (0-9)	TRUNK SELECTION UNITS SAME AS (TS0-19) KEY.
		TSTI KEY	TRUNK SELECTION TENS OPERATED WITH TSU SWITCH SELECTS PARTICULAR TRUNK.
2	8, 35	OSS KEY	OUTGOING SENDER SELECTION WITH THE SGA/SGB KEY OPERATED. DIRECTS THE MARKER TO CONNECT TO THE A OR B SUBGROUP OF SENDERS WITHOUT FIRST TESTING FOR AN IDLE SENDER.

ISSUE 4

SFD-10-01-C816

OUTGOING CLASS OF TRUNK TEST

PRINTED IN U.S.A.

DWG SIZE 6S

BELL TELEPHONE LABORATORIES INCORPORATED

SFD-10-01-C816

SD-25800-01

*SEE NOTE	FIG.OR OPT	KEY OR SWITCH	FUNCTION
2	8, 35	SGA/ SGB KEY	SENDER SUBGROUP A/SENDER SUBGROUP B WITH THE OSS KEY ALSO OPERATED, DIRECTS THE MARKER TO CONNECT TO THE A OR B SUBGROUP OF SENDERS WITHOUT FIRST TESTING FOR IDLE SENDERS.
2	8, 83	OS (0-4) KEY	OUTGOING SENDER SELECTS A PARTICULAR SENDER WITHIN A SUBGROUP.
	84	OS SW (0-4)	
2	9,QE	RA (0-3) KEY	ROUTE ADVANCE ALLOWS THE MARKER TO FIND AN IDLE TRUNK ONLY AFTER IT HAS ROUTE ADVANCED EXACTLY THE NUMBER OF TIMES CORRESPONDING TO KEY OR SWITCH SETTING.
	9,QF	RA SW (0-5)	
	9,IB	RA SW (0-11)	
	9,CG	RAU SW (0-9)	
	9/99, DL	RATI KEY	
2	9	GPA/ GPB KEY	ALLOTTER GROUP A AND B USED ON TEST REQUIRING THE MARKER TO USE A ROUTE WHICH HAS ALLOTTED TRUNK GROUPS.
3	1	REC KEY	RECORD CAUSES MARKER TO REQUEST A TROUBLE RECORD OF THE TEST CALL BEFORE RELEASING.
3	129, ZQY, ZQO	OBS KEY	OBSERVED GROUNDS THE OBST LEAD INSTEAD OF NOBT TO SIMULATE AN ORIGINATING REGISTER ON AN OBSERVED CALL.
3	17,US VM	TOBS KEY	TRUNK OBSERVING PROVIDES PATH FOR OPERATING TOBS RELAY IN MARKER.
3	4	TTL KEY	TERMINATING TEST LINE OPERATED ON TRUNK TEST TO CAUSE AN INCOMING TRUNK TEST LINE NUMBER TO BE TRANSMITTED TO THE MARKER USED TO SET UP THE TEST CONNECTION.
3		ANS KEY	ANSWER WHEN OPERATED TO ANSWER EXTENDS THE TIP AND RING LEADS TOWARD A TERMINATING TEST LINE CONSISTING OF RESISTORS AND RELAYS SIMULATING AN INCOMING TRUNK CIRCUIT. THE RESISTANCE IN THIS LOOP GIVES AN OPERATE TEST TO CALLED PARTY SUPERVISORY RELAY OF THE TRUNK CIRCUITS. ANS KEY LOC ON TTC PANEL

* SEE SHEET C816 FOR SHEET NOTES.

ISSUE 3

OUTGOING CLASS OF TRUNK TEST

SFD-10-01-C817

BELL TELEPHONE LABORATORIES INCORPORATED

DWG SIZE 6S

PRINTED IN U.S.A.

SFD-10-01-C817

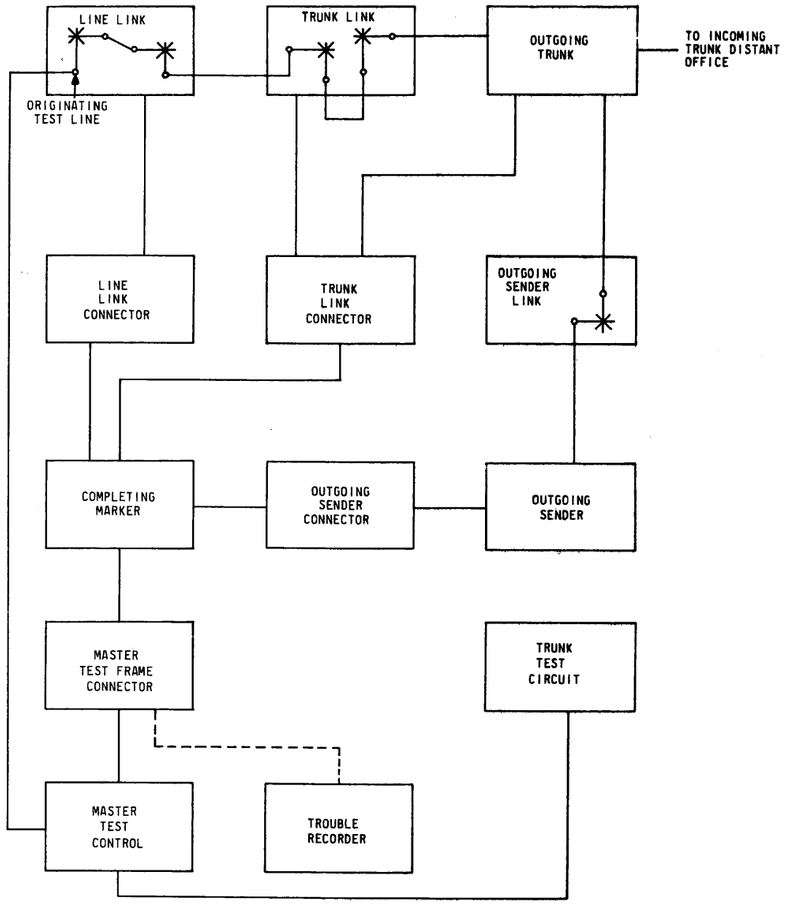

BSP 218-271-501, ISS 8

SD-25800-01 MASTER TEST CONTROL CIRCUIT (MTC)
SD-25918-01 TRUNK TEST CIRCUIT (TTC)
SD-25680-01 AUTOMATIC MONITOR REGISTER AND SENDER TEST (AMRST)

SHEET NOTES:

1. KEY(S) OR SWITCH(ES) THAT MUST BE OPERATED TO PERFORM THIS CLASS OF TEST.
2. KEY(S) OR SWITCH(ES) USED TO SIMULATE TROUBLE RECORD (SEE SFD-C802/C804/C806).
3. KEY(S) OR SWITCH(ES) WHICH MAY BE OPERATED TO CAUSE ADDITIONAL ACTIONS OR TEST VARIATIONS FOR THIS PARTICULAR TEST.
4. KEY(S) OR SWITCH(ES) LOCATED ON AMRST PANEL.

SD-25800-01

SEE NOTE	FIG. OR OPT	KEY OR SWITCH	FUNCTION
1	68	MISC KEY	MISC CLASS OF TRUNK TEST CAUSES THE MTC CIRCUIT TO CONNECT TO THE TRUNK TEST CIRCUIT AND MARKER VIA THE MTFC IN ORDER TO DIRECT THE MARKER TO SET UP A TEST CONNECTION TO A TRUNK FOR MISC TEST. THE MISC CLASS OF TEST IS USED FOR OGT CIRCUITS WHEN IT IS DESIRED TO ESTABLISH A CONNECTION VIA THE TRUNK UNDER TEST TO THE DISTANT OFFICE. FOR THIS TEST THE TRUNK TT RELAY REMAINS NONOPERATED.
	74	TSTB SW (MISC)	
1,2	17,WX	FACD KEY (OPR/N-OPR)	ORIGINATING/FOREIGN AREA CLASS WITH THE FACD KEY NORMAL OR THE CL SWITCH OPERATED TO OR-DP/MF, INDICATES A HOME OFFICE CODE. WITH THE FACD KEY OR CL SWITCH OPERATED TO FAC-DP/MF, INDICATES A FOREIGN AREA CODE.
	11,NQ	CL SW (OR-DP/MF, FAC-DP/MF)	
	WW	NONE	
1,2	11,OX	2DTO KEY	TRANSLATOR CLASS OPERATE AS REQUIRED TO PRIME MARKER WITH NECESSARY ORIGINATING TRANSLATION FOR SELECTED ROUTE.
	17,NP	11/X11 KEY	
	17,SX	LT1 KEY	
	17,PH	LT2 KEY	
	11,EC	FVDO KEY	
	11,OY	LT3 KEY	
	NT,OW	LOC TRNSL (ALL KEYS NORMAL)	
	11,NQ	TRNA SW (LT/LT1/LT2/LT3/2DT/X11/11/FVD)	
1,2	19,21	MT (0-11) KEY	MARKER TEST DIRECTS THE MTFC TO CONNECT THIS TEST CIRCUIT (MTC) TO THE MARKER CORRESPONDING TO THE NUMBER OPERATED.
	52	MT SW (0-11)	
	81	MTU SW (0-9)	
		MTTI KEY	
1,2	4,KX	A-C (0-9) KEY	CALLED DIGITS (A-C) PRIMES THE MARKER WITH A THREE DIGIT AREA CODE OR THREE DIGIT OFFICE CODE.
	4,ZVL	A-C SW (0-9)	
1,2	4,KX	D(0-9) KEY	CALLED DIGITS (D-K) PRIMES THE MARKER WITH THE CALLED DIGITS.
	4,KY	E(0-9) KEY	
	4,KZ	F(0-9) KEY	
	4,JA	G(0-9) KEY	
	4,JB	H(0-9) KEY	
	4,JC	J(0-9) KEY	
	4,JD	K(0-9) KEY	
	4,ZVL	D-K SW (0-9)	

SD-25800-01

SEE NOTE	FIG. OR OPT	KEY OR SWITCH	FUNCTION
1		TLK KEY	TALK USED TO COMPLETE TIP AND RING LEADS TO SIMULATE LINE AT MTF JACK, LAMP, AND KEY CIRCUIT. TLK KEY LOC ON TRUNK TEST PANEL
1	4	KY KEY	CONNECT NUMBER ALLOWS ANY NUMBER ON KEYS OR SWS A(0-9) THRU L(0-9) TO BE TRANSMITTED TO THE MARKER.
1,2	7,XA, XB,ZG	CST (0-2) KEY	CLASS OF SERVICE TENS CONTROLS THE CLASS-OF-SERVICE TENS DIGIT TRANSMITTED TO THE MARKER.
	7,XB	CST (0-9) KEY	
	7,JF	CST SW (0-9)	
1,2	7,JH, RY	CSU (0-9) KEY	CLASS OF SERVICE UNITS CONTROLS THE CLASS-OF-SERVICE UNITS DIGIT TRANSMITTED TO THE MARKER.
	7,JF	CSU SW (0-9)	
1,2	37, GC,GD	CGB KEY (OPR/N-OPR)	CLASS GROUP B USED WHEN OFFICE HAS A MAXIMUM OF 60 CLASSES OF SERVICE. SELECTS CLASS GROUP A WITH KEY IN NORMAL POSITION.
		NONE	
1,2	7,JI	CRU (0-9) KEY	CUSTOMER RATE TREATMENT UNITS PROVIDES RATE TREATMENT INFORMATION TO MARKER.
	7,JF	CRU SW (0-9)	
		NONE	NO RATE TREATMENT REQUIRED.
1,2	7,ED	CSGA/ CSGB KEY	RATE TREATMENT GROUP A AND B CONTROLS THE RATE TREATMENT GROUP INDICATION TO MARKER.
		NONE	NO RATE TREATMENT REQUIRED.
1	1	ST/RL	START AND RELEASE OPERATED TO ST INITIATES A TEST CALL. OPERATED TO RL CAUSES TEST CALL AND ALL ASSOCIATED CIRCUITS TO RELEASE.
2	9	FS/ NTFS KEY	FRAME SELECTION/NO TEST FRAME SELECTION PERMITS SELECTION OF A PARTICULAR TRUNK LINK FRAME UNDER CONTROL OF THE FG(0-2) KEYS AND FS(0-9) KEYS OR SWITCH, WITH (FS KEY) OR WITHOUT (NTFS KEY), FIRST TESTING FOR IDLE TRUNKS ON THAT TRUNK LINK FRAME.
2	U	FG (0,1) KEY	TRUNK LINK FRAME GROUP USED IN CONJUNCTION WITH THE FS(0-9) KEYS OR SWITCH WHEN THE FS OR NTFS KEYS ARE OPERATED. INDICATES TENS DIGIT OF TRUNK LINK FRAME NUMBER.
	79	FG (0-2) KEY	
	80	FG (1,2) KEY	FOR FRAME GROUP 0, THE FG KEY SHOULD BE IN THE NORMAL POSITION.
2	U, 79	FS (0-9) KEY	TRUNK LINK FRAME UNITS WITH FS KEY OPERATED, MAKES ALL TRUNK LINK FRAMES EXCEPT THAT CORRESPONDING TO THE OPERATED FS(0-9) ON FG(0-2) KEYS LOOK BUSY.
	80	FS SW (0-9)	
2	9	TS/ NTTS KEY	TRUNK SELECTION/NO TEST TRUNK SELECTION MAKES ALL TRUNKS EXCEPT THE ONE CORRESPONDING TO THE OPERATED TS(0-19) KEYS OR SWITCH LOOK BUSY TO THE MARKER AND IF NTTS KEY IS OPERATED, WILL OPERATE THE "TST" RELAY IN THE TLF WHICH REMOVES THE PLUGGED-BUSY CONDITION FROM ALL TRUNKS ON THAT TRUNK LINK FRAME.

ISSUE 4

SFD-10-01-C818

MISC CLASS OF TRUNK TEST

PRINTED IN U. S. A.

DWG SIZE 6S

BELL TELEPHONE LABORATORIES INCORPORATED

SFD-10-01-C818

SD-25800-01

* SEE NOTE	FIG. OR OPT	KEY OR SWITCH	FUNCTION
2	9,KX	TS (0-19) KEY	TRUNK SELECTION MAKES ALL TRUNKS EXCEPT ONE CORRESPONDING TO THE OPERATED TS(0-9) KEY LOOK BUSY TO THE MARKER.
	9,JF	TSU SW (0-9)	TRUNK SELECTION UNITS SAME AS (TSO-19) KEY.
		TSTI KEY	TRUNK SELECTION TENS OPERATED WITH TSU SWITCH SELECTS PARTICULAR TRUNK.
2	8, 35	OSS KEY	OUTGOING SENDER SELECTION WITH THE SGA/SGB KEY OPERATED, DIRECTS THE MARKER TO CONNECT TO THE A OR B SUBGROUP OF SENDERS WITHOUT FIRST TESTING FOR AN IDLE SENDER.
2	8, 35	SGA/ SGB KEY	SENDER SUBGROUP A/SENDER SUBGROUP B WITH THE OSS KEY ALSO OPERATED, DIRECTS THE MARKER TO CONNECT TO THE A OR B SUBGROUP OF SENDERS WITHOUT FIRST TESTING FOR IDLE SENDERS.
2	8, 83	OS (0-4) KEY	OUTGOING SENDER SELECTS A PARTICULAR SENDER WITHIN A SUBGROUP.
	84	OS SW (0-4)	
2	9,QE	RA (0-3) KEY	ROUTE ADVANCE ALLOWS THE MARKER TO FIND AN IDLE TRUNK ONLY AFTER IT HAS ROUTE ADVANCED EXACTLY THE NUMBER OF TIMES CORRESPONDING TO KEY OR SWITCH SETTING.
	9,QF	RA SW (0-5)	
	9,IB	RA SW (0-11)	
	9,CG	RAU SW (0-9)	
	9/99, DL	RATI KEY	
2	9	GPA/GPB KEY	ALLOTTER GROUP A AND B USED ON TESTS REQUIRING THE MARKER TO USE A ROUTE WHICH HAS ALLOTTED TRUNK GROUPS.
3	1	REC KEY	RECORD CAUSES MARKER TO REQUEST A TROUBLE RECORD OF THE TEST CALL BEFORE RELEASING.
3	17	TP/ PMM KEY	TIP PARTY/PARTY MISMATCH TP KEY OPERATED SIGNALS THE MARKER THAT A TIP PARTY CALL IS BEING HANDLED. PMM KEY OPERATED SIGNALS THE MARKER OF A PARTY MISMATCH.
3	17, ZWM	PS KEY	PERMANENT SIGNAL SIGNALS THE MARKER THAT IT IS HANDLING A PERMANENT SIGNAL CALL.
3	17, ZWM	PD KEY	PARTIAL DIAL SIGNALS THE MARKER THAT IT IS HANDLING A PARTIAL DIAL CALL.
3	17	CNR KEY	COIN RETURN SIGNALS THE MARKER THAT THE COIN WAS RETURNED BY THE OR. USED IN SETTING UP TRUNKS HAVING NO COIN RETURN FEATURES OF THEIR OWN.
3	17,K	SCN KEY	STUCK COIN SIGNALS THE MARKER THAT THERE IS A STUCK COIN.
3	4	TTL/BB KEY	TERMINATING TEST LINK OPERATED ON TRUNK TESTS TO CAUSE AN INCOMING TRUNK TEST LINE NUMBER TO BE TRANSMITTED TO THE MARKER USED TO SET UP THE TEST CONNECTION. BUSYBACK CAUSES PERMANENTLY BUSY NUMBER TO BE TRANSMITTED TO THE MARKER.

* SEE SHEET C818 FOR SHEET NOTES

ISSUE 3

MISC CLASS OF TRUNK TEST

SFD-10-01-C819

BELL TELEPHONE LABORATORIES INCORPORATED

6S

PRINTED IN U.S.A.

SFD-10-01-C819

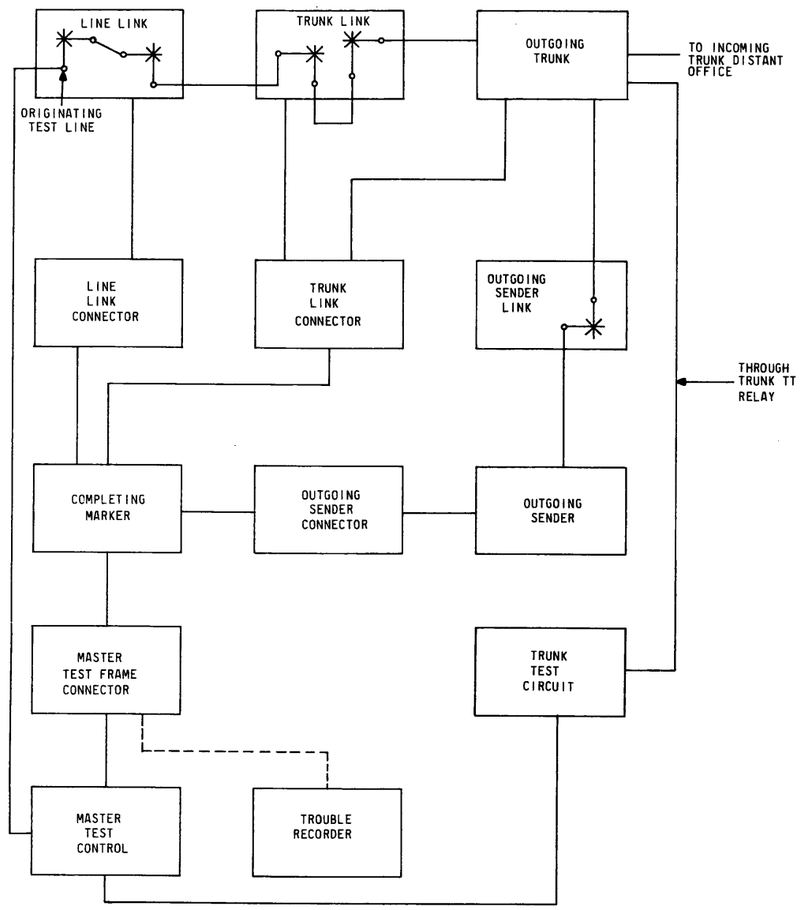

BSP 218-271-501, ISS 8
SD-25800-01 MASTER TEST CONTROL CIRCUIT (MTC)
SD-25918-01 TRUNK TEST CIRCUIT (TTC)
SD-25680-01 AUTOMATIC MONITOR REGISTER AND SENDER TEST (AMRST)

SHEET NOTES:

1. KEY(S) OR SWITCH(ES) THAT MUST BE OPERATED TO PERFORM THIS CLASS OF TEST.
2. KEY(S) OR SWITCH(ES) USED TO SIMULATE TROUBLE RECORD (SEE SFD-C802/C804/C806).
3. KEY(S) OR SWITCH(ES) WHICH MAY BE OPERATED TO CAUSE ADDITIONAL ACTIONS OR TEST VARIATIONS FOR THIS PARTICULAR TEST.

SD-25800-01

SEE NOTE	FIG. OR OPT	KEY OR SWITCH	FUNCTION
1	68	ITDO KEY	INCOMING TRUNK IN DISTANT OFFICE TRUNK TEST CAUSES THE TEST CIRCUIT TO CONNECT TO THE TRUNK TEST CIRCUIT AND THEN TO CONNECT TO A MARKER THROUGH THE MASTER TEST FRAME CONNECTOR CIRCUIT IN ORDER TO DIRECT THE MARKER TO SET UP A TEST CONNECTION TO THE OUTGOING TRUNK ASSOCIATED WITH THE INCOMING TRUNK UNDER TEST IN THE DISTANT OFFICE. THE MARKER IS DIRECTED TO SET UP A TEST LINE NUMBER IN THE SENDER WHICH IT CONNECTS TO THE OUTGOING TRUNK. THE SENDER IS USED TO DIRECT THE INCOMING TRUNK IN THE DISTANT OFFICE TO A TEST LINE. THE (TT) RELAY IN THE OUTGOING TRUNK IS OPERATED IN ORDER TO PROVIDE TEST ACCESS FOR THE TRUNK TEST CIRCUIT.
	74	TSTB SW (ITDO)	
1,2	17,WX	FACD KEY (OPR/N-OPR)	ORIGINATING/FOREIGN AREA CLASS WITH THE FACD KEY NORMAL OR THE CL SWITCH OPERATED TO OR-DP/MF, INDICATES A HOME OFFICE CODE, WITH THE FACD KEY OR CL SWITCH OPERATED TO FAC-DP/MF, INDICATES A FOREIGN AREA CODE.
	11,NQ	CL SW (OR-DP/MF, FAC-DP/MF)	
	WW	NONE	
1,2	11,OX	2DTO KEY	TRANSLATOR CLASS OPERATE AS REQUIRED TO PRIME MARKER WITH NECESSARY ORIGINATING TRANSLATION FOR SELECTED ROUTE.
	17,NP	11/X11 KEY	
	17,SX	LT1 KEY	
	17,PH	LT2 KEY	
	11,EC	FVDO KEY	
	11,OY	LT3 KEY	
	NT,OW	LOC TRNSL (ALL KEYS NORMAL)	
	11,NQ	TRNA SW (LT/LT1/LT2/LT3/2DT/X11/11/FVD)	
1,2	19,21	MT (0-11) KEY	MARKER TEST DIRECTS THE MTFC TO CONNECT THIS TEST CIRCUIT (MTC) TO THE MARKER CORRESPONDING TO THE NUMBER OPERATED.
	52	MT SW (0-11)	
	81	MTU SW (0-9)	
		MT-1 KEY	
1,2	4,KX	A-C (0-9) KEY	CALLED DIGITS (A-C) PRIMES THE MARKER WITH A THREE DIGIT AREA CODE OR THREE DIGIT OFFICE CODE.
	4,ZVL	A-C SW (0-9)	
1,2	4,KX	D(0-9) KEY	CALLED DIGITS (D-K) PRIMES THE MARKER WITH THE CALLED DIGITS.
	4,KY	E(0-9) KEY	
	4,KZ	F(0-9) KEY	
	4,JA	G(0-9) KEY	
	4,JB	H(0-9) KEY	
	4,JC	J(0-9) KEY	
	4,JD	K(0-9) KEY	
	4,ZVL	D-K SW (0-9)	

SD-25800-01

SEE NOTE	FIG. OR OPT	KEY OR SWITCH	FUNCTION
1		TLK KEY	TALK USED TO COMPLETE TIP AND RING LEADS TO SIMULATE LINE AT MTF JACK, LAMP, AND KEY CIRCUIT. TLK KEY LOC ON TRUNK TEST PANEL.
1	4	KY KEY	CONNECT NUMBER ALLOWS ANY NUMBER ON KEYS OR SWS A(0-9) THRU L(0-9) TO BE TRANSMITTED TO THE MARKER.
1,2	7,XA, XB,ZG	CST (0-2) KEY	CLASS OF SERVICE TENS CONTROLS THE CLASS-OF-SERVICE TENS DIGIT TRANSMITTED TO THE MARKER.
	7,XB	CST (0-9) KEY	
	7,JF	CST SW (0-9)	
1,2	7,JH, RY	CSU (0-9) KEY	CLASS OF SERVICE UNITS CONTROLS THE CLASS-OF-SERVICE UNITS DIGIT TRANSMITTED TO THE MARKER.
	7,JF	CSU SW (0-9)	
1,2	37, GC,GD	CGB KEY (OPR/N-OPR)	CLASS GROUP B USED WHEN OFFICE HAS A MAXIMUM OF 60 CLASSES OF SERVICE. SELECTS CLASS GROUP A WITH KEY IN NORMAL POSITION.
		NONE	
1,2	7,JI	CRU (0-9) KEY	CUSTOMER RATE TREATMENT UNITS PROVIDES RATE TREATMENT INFORMATION TO MARKER.
	7,JF	CRU SW (0-9)	
		NONE	NO RATE TREATMENT REQUIRED.
1,2	7,ED	CSGA/ CSGB KEY	RATE TREATMENT GROUP A AND B CONTROLS THE RATE TREATMENT GROUP INDICATION TO MARKER.
		NONE	NO RATE TREATMENT REQUIRED.
1	1	ST/RL KEY	START AND RELEASE OPERATED TO ST INITIATES A TEST CALL. OPERATED TO RL CAUSES TEST CALL AND ALL ASSOCIATED CIRCUITS TO RELEASE.
2	9	FS/ NTFS KEY	FRAME SELECTION/NO TEST FRAME SELECTION PERMITS SELECTION OF A PARTICULAR TRUNK LINK FRAME UNDER CONTROL OF THE FG(0-2) KEYS AND FS(0-9) KEYS OR SWITCH, WITH (FS KEY) OR WITHOUT (NTFS KEY), FIRST TESTING FOR IDLE TRUNKS ON THAT TRUNK LINK FRAME.
2	U	FG (0,1) KEY	TRUNK LINK FRAME GROUP USED IN CONJUNCTION WITH THE FS(0-9) KEYS OR SWITCH WHEN THE FS OR NTFS KEYS ARE OPERATED. INDICATES TENS DIGIT OF TRUNK LINK FRAME NUMBER.
	79	FG (0-2) KEY	
	80	FG (1,2) KEY	FOR FRAME GROUP 0, THE FG KEY SHOULD BE IN THE NORMAL POSITION.
2	U, 79	FS (0-9) KEY	TRUNK LINK FRAME UNITS WITH FS KEY OPERATED, MAKES ALL TRUNK LINK FRAMES EXCEPT THAT CORRESPONDING TO THE OPERATED FS(0-9) ON FG(0-2) KEYS LOOK BUSY.
	80	FS SW (0-9)	

ISSUE 4

SFD-10-01-C820

ITDO CLASS OF TRUNK TEST

DWG SIZE 6S

BELL TELEPHONE LABORATORIES INCORPORATED

PRINTED IN U.S.A.

E-7481-L (4-72)

SFD-10-01-C820

SD-25800-01

*SEE NOTE	FIG. OR OPT	KEY OR SWITCH	FUNCTION
2	9	TS/ NTTS KEY	TRUNK SELECTION/NO TEST TRUNK SELECTION MAKES ALL TRUNKS EXCEPT THE ONE CORRESPONDING TO THE OPERATED TS(0-19) KEYS OR SWITCH LOOK BUSY TO THE MARKER AND IF NTTS KEY IS OPERATED, WILL OPERATE THE "TST" RELAY IN THE TLF WHICH REMOVES THE PLUGGED-BUSY CONDITION FROM ALL TRUNKS ON THAT TRUNK LINK FRAME.
2	9,KX	TS (0-19) KEY	TRUNK SELECTION MAKES ALL TRUNKS EXCEPT ONE CORRESPONDING TO THE OPERATED TS(0-9) KEY LOOK BUSY TO THE MARKER.
	9,JF	TSU SW (0-9)	TRUNK SELECTION UNITS SAME AS (TS0-19) KEY.
		TSTI KEY	TRUNK SELECTION TENS OPERATED WITH TSU SWITCH SELECTS PARTICULAR TRUNK.
3	8, 35	OSS KEY	OUTGOING SENDER SELECTION WITH THE SGA/SGB KEY OPERATED, DIRECTS THE MARKER TO CONNECT TO THE A OR B SUBGROUP OF SENDERS WITHOUT FIRST TESTING FOR AN IDLE SENDER.
2	8, 35	SGA/ SGB KEY	SENDER SUBGROUP A/SENDER SUBGROUP B WITH THE OSS KEY ALSO OPERATED, DIRECTS THE MARKER TO CONNECT TO THE A OR B SUBGROUP OF SENDERS WITHOUT FIRST TESTING FOR IDLE SENDERS.
2	8, 83	OS (0-4) KEY	OUTGOING SENDER SELECTS A PARTICULAR SENDER WITHIN A SUBGROUP.
	84	OS SW (0-4)	
2	9,QE	RA (0-3) KEY	ROUTE ADVANCE ALLOWS THE MARKER TO FIND AN IDLE TRUNK ONLY AFTER IT HAS ROUTE ADVANCED EXACTLY THE NUMBER OF TIMES CORRESPONDING TO KEY OR SWITCH SETTING.
	9,QF	RA SW (0-5)	
	9,IB	RA SW (0-11)	
	9,CG	RAU SW (0-9)	
	9/99, DL	RATI KEY	
2	9	GPA/GPB KEY	ALLOTTER GROUP A AND B USED ON TESTS REQUIRING THE MARKER TO USE A ROUTE WHICH HAS ALLOTTED TRUNK GROUPS.
3	1	REC KEY	RECORD CAUSES MARKER TO REQUEST A TROUBLE RECORD OF THE TEST CALL BEFORE RELEASING.
3	4	TTL/BB KEY	TERMINATING TEST LINE OPERATED ON TRUNK TESTS TO CAUSE AN INCOMING TRUNK TEST LINE NUMBER TO BE TRANSMITTED TO THE MARKER USED TO SET UP THE TEST CONNECTION. BUSYBACK CAUSES PERMANENTLY BUSY NUMBER TO BE TRANSMITTED TO THE MARKER.

* SEE SHEET C820 FOR SHEET NOTES

TEST CALL SETUP FOR TRUNK TRANSMISSION TEST OF CIRCUITS TERMINATED ON TRUNK LINK FRAME

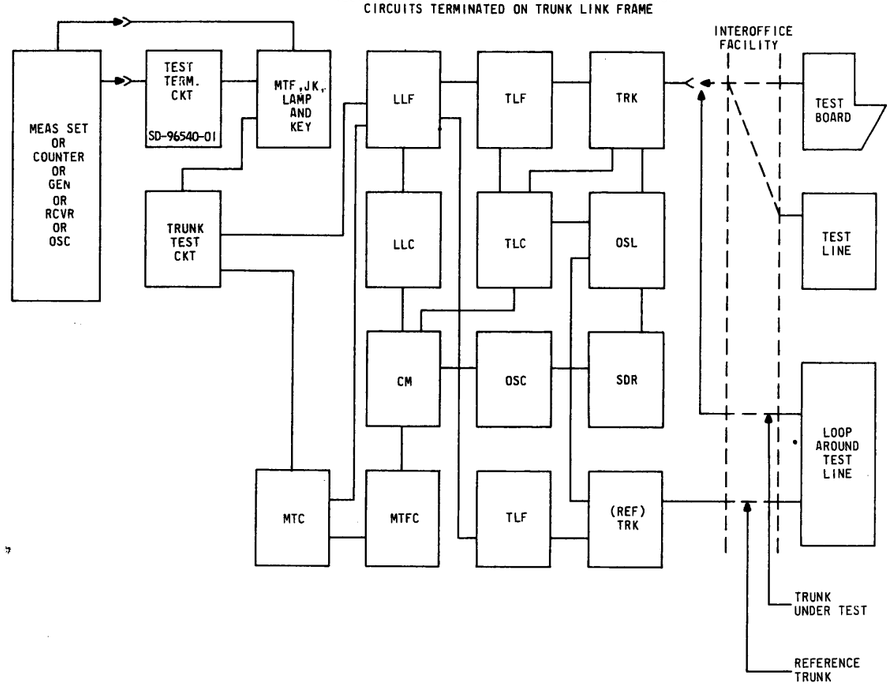

SEE BSP 218-246-501 FOR SEQUENCE OF KEYS TO BE OPERATED AT TEST TERMINATION CIRCUIT ON MTF JACK, LAMP, AND KEY FRAME.

SD-25800-01 MASTER TEST CONTROL CIRCUIT (MTC)
SD-25918-01 TRUNK TEST CIRCUIT (TTC)

SHEET NOTES:

1. KEY(S) OR SWITCH(ES) THAT MUST BE OPERATED TO PERFORM THIS CLASS OF TEST.
2. KEY(S) OR SWITCH(ES) USED TO SIMULATE TROUBLE RECORD (SEE SFD-C802/C804/C806).
3. KEY(S) OR SWITCH(ES) WHICH MAY BE OPERATED TO CAUSE ADDITIONAL ACTIONS OR TEST VARIATIONS FOR THIS PARTICULAR TEST.

SD-25800-01

SEE NOTE	FIG.OR OPT	KEY OR SWITCH	FUNCTION
1	68	MISC KEY	MISC CLASS OF TRUNK TEST CAUSES THE MTC CIRCUIT TO CONNECT TO THE TRUNK TEST CIRCUIT AND MARKER VIA THE MTFC IN ORDER TO DIRECT THE MARKER TO SET UP A TEST CONNECTION TO A TRUNK FOR MISC TEST. THE MISC CLASS OF TEST IS USED FOR OGT CIRCUITS WHEN IT IS DESIRED TO ESTABLISH A CONNECTION VIA THE TRUNK UNDER TEST TO THE DISTANT OFFICE. FOR THIS TEST THE TRUNK TT RELAY REMAINS NONOPERATED.
	74	TSTB SW (MISC)	
1,2	17,WX	FACD KEY (OPR/N-OPR)	ORIGINATING/FOREIGN AREA CLASS WITH THE FACD KEY NORMAL OR THE CL SWITCH OPERATED TO OR-DP/MF, INDICATES A HOME OFFICE CODE. WITH THE FACD KEY OR CL SWITCH OPERATED TO FAC-DP/MF, INDICATES A FOREIGN AREA CODE.
	11,NQ	CL SW (OR-CP/MF, FAC-DP/MF)	
	WW	NONE	
1,2	11,OX	2DTO KEY	TRANSLATOR CLASS OPERATE AS REQUIRED TO PRIME MARKER WITH NECESSARY ORIGINATING TRANSLATION FOR SELECTED ROUTE.
	17,NP	11/X11 KEY	
	17,SX	LT1 KEY	
	17,PH	LT2 KEY	
	11,EC	FVDO KEY	
	11,OY	LT3 KEY	
	NT,OW	LOC TRNSL (ALL KEYS NORMAL)	
	11,NQ	TRNA SW (LT/LT1/LT2/LT3/2DT/X11/11/FVD)	
1,2	19,21	MT (0-11) KEY	MARKER TEST DIRECTS THE MTFC TO CONNECT THIS TEST CIRCUIT (MTC) TO THE MARKER CORRESPONDING TO THE NUMBER OPERATED.
	52	MT SW (0-11)	
	81	MTU SW (0-9)	
		MTT1 KEY	
1,2	4,KX	A-C (0-9) KEY	CALLED DIGITS (A-C) PRIMES THE MARKER WITH A THREE DIGIT AREA CODE OR THREE DIGIT OFFICE CODE.
	4,ZVL	A-C SW (0-9)	
1,2	4,KX	D(0-9) KEY	CALLED DIGITS (D-K) PRIMES THE MARKER WITH THE CALLED DIGITS.
	4,KY	E(0-9) KEY	
	4,KZ	F(0-9) KEY	
	4,JA	G(0-9) KEY	
	4,JB	H(0-9) KEY	
	4,JC	J(0-9) KEY	
	4,JD	K(0-9) KEY	
	4,ZVL	D-K SW (0-9)	
1		TLK KEY	TALK USED TO COMPLETE TIP AND RING LEADS TO SIMULATE LINE AT MTF JACK,LAMP, AND KEY CIRCUIT. TLK KEY LOC ON TRUNK TEST PANEL.
1	4	KY KEY	CONNECT NUMBER ALLOWS ANY NUMBER ON KEYS OR SWS A(0-9) THRU L(0-9) TO BE TRANSMITTED TO THE MARKER.

SD-25800-01

SEE NOTE	FIG.OR OPT	KEY OR SWITCH	FUNCTION
1,2	7,XA, XB,ZG	CST (0-2) KEY	CLASS OF SERVICE TENS CONTROLS THE CLASS-OF-SERVICE TENS DIGIT TRANSMITTED TO THE MARKER.
	7,XB	CST (0-9) KEY	
	7,JF	CST SW (0-9)	
1,2	7,JH, RY	CSU (0-9) KEY	CLASS OF SERVICE UNITS CONTROLS THE CLASS-OF-SERVICE UNITS DIGIT TRANSMITTED TO THE MARKER.
	7,JF	CSU SW (0-9)	
1,2	37, GC,GD	CGB KEY (OPR/N-OPR)	CLASS GROUP B USED WHEN OFFICE HAS A MAXIMUM OF 60 CLASSES OF SERVICE. SELECTS CLASS GROUP A WITH KEY IN NORMAL POSITION.
		NONE	
1,2	7,JI	CRU (0-9) KEY	CUSTOMER RATE TREATMENT UNITS PROVIDES RATE TREATMENT INFORMATION TO MARKER.
	7,JF	CRU SW (0-9)	
		NONE	NONE RATE TREATMENT REQUIRED.
1,2	7,ED	CSGA/ CSGB KEY	RATE TREATMENT GROUP A AND B CONTROLS THE RATE TREATMENT GROUP INDICATION TO MARKER.
		NONE	NO RATE TREATMENT REQUIRED.
1,2	9,KX	TS (0-19) KEY	TRUNK SELECTION MAKES ALL TRUNKS EXCEPT ONE CORRESPONDING TO THE OPERATED TS(0-9) KEY LOOK BUSY TO THE MARKER.
	9,JF	TSU SW (0-9)	TRUNK SELECTION UNITS SAME AS (TS0-19) KEY.
		TSTI KEY	TRUNK SELECTION TENS OPERATED WITH TSU SWITCH SELECTS PARTICULAR TRUNK.
1,2	9	FS/ NTFS KEY	FRAME SELECTION/NO TEST FRAME SELECTION PERMITS SELECTION OF A PARTICULAR TRUNK LINK FRAME UNDER CONTROL OF THE FG(0-2) KEYS AND FS(0-9) KEYS OR SWITCH, WITH (FS KEY) OR WITHOUT (NTFS KEY), FIRST TESTING FOR IDLE TRUNKS ON THAT TRUNK LINK FRAME.
1,2	U	FG (0,1) KEY	TRUNK LINK FRAME GROUP USED IN CONJUNCTION WITH THE FS(0-9) KEYS OR SWITCH WHEN THE FS OR NTFS KEYS ARE OPERATED. INDICATES TENS DIGIT OF TRUNK LINK FRAME NUMBER.
	79	FG (0-2) KEY	
	80	FG (1,2) KEY	FOR FRAME GROUP 0, THE FG KEY SHOULD BE IN THE NORMAL POSITION.
1,2	U, 79	FS (0-9) KEY	TRUNK LINK FRAME UNITS WITH FS KEY OPERATED, MAKES ALL TRUNK LINK FRAMES EXCEPT THAT CORRESPONDING TO THE OPERATED FS(0-9) ON FG(0-2) KEYS LOOK BUSY.
	80	FS SW (0-9)	
1,2	9	TS/ NTTS KEY	TRUNK SELECTION/NO TEST TRUNK SELECTION MAKES ALL TRUNKS EXCEPT THE ONE CORRESPONDING TO THE OPERATED TS(0-19) KEYS OR SWITCH LOOK BUSY TO THE MARKER AND IF NTTS KEY IS OPERATED, WILL OPERATE THE "TST" RELAY IN THE TLF WHICH REMOVES THE PLUGGED-BUSY CONDITION FROM ALL TRUNKS ON THAT TRUNK LINK FRAME.
1,2	9	GPA/GPB KEY	ALLOTTER GROUP A AND B USED ON TESTS REQUIRING THE MARKER TO USE A ROUTE WHICH HAS ALLOTTED TRUNK GROUPS.
		NONE	NON-ALLOTTED TRUNK GROUPS.
1	1	ST/RL KEY	START AND RELEASE OPERATED TO ST INITIATES A TEST CALL. OPERATED TO RL CAUSES TEST CALL AND ALL ASSOCIATED CIRCUITS TO RELEASE.

ISSUE 4

SFD-10-01-C822

TEST CALL SET-UP FOR TRUNK TRANSMISSION TESTING

PRINTED IN U. S. A.

PAGE SIZE 6S

BELL TELEPHONE LABORATORIES INCORPORATED

SFD-10-01-C822

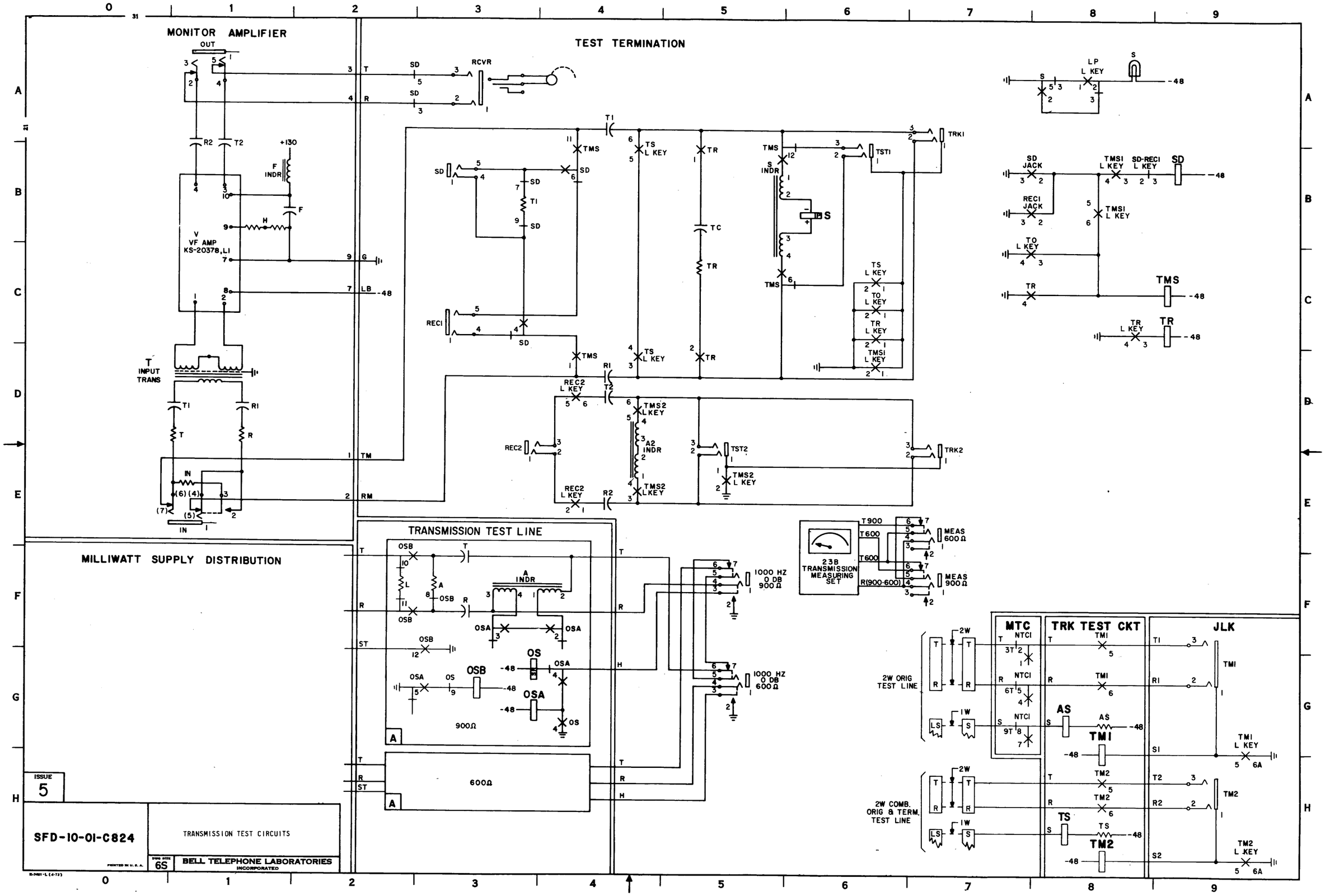

SFD-10-01-C824

DIAGRAM FOR ONE-WAY 1000-HZ LOSS MEASUREMENT

(SEE BSP 218-246-501 FOR DETAILED DESCRIPTION)

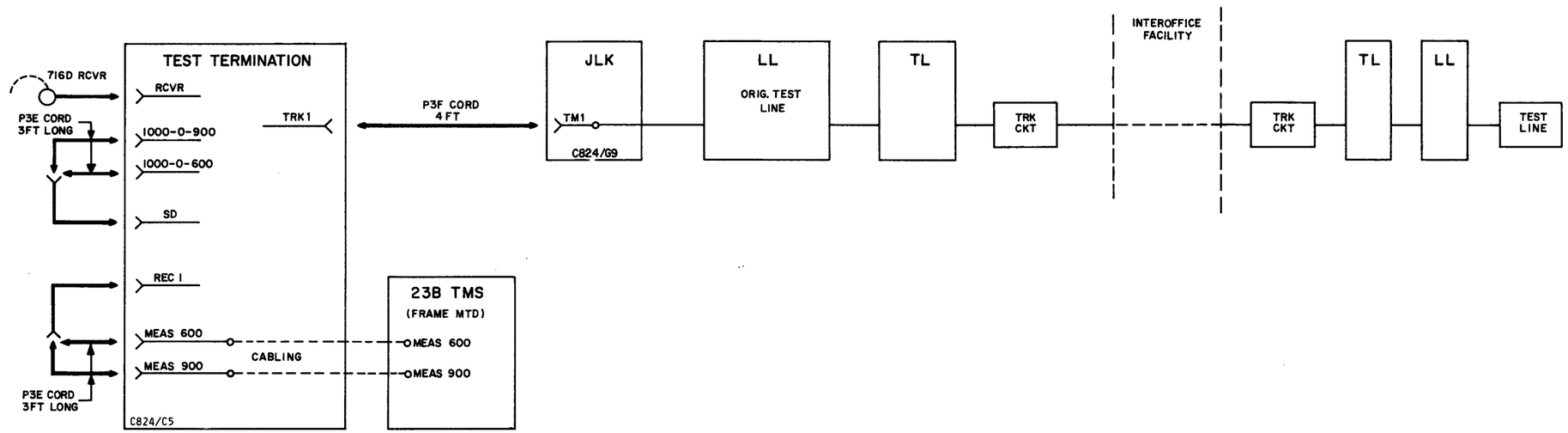

DIAGRAM FOR LOOP-AROUND TWO-WAY 1000-HZ LOSS MEASUREMENT

(SEE BSP 218-246-501 FOR DETAILED DESCRIPTION)

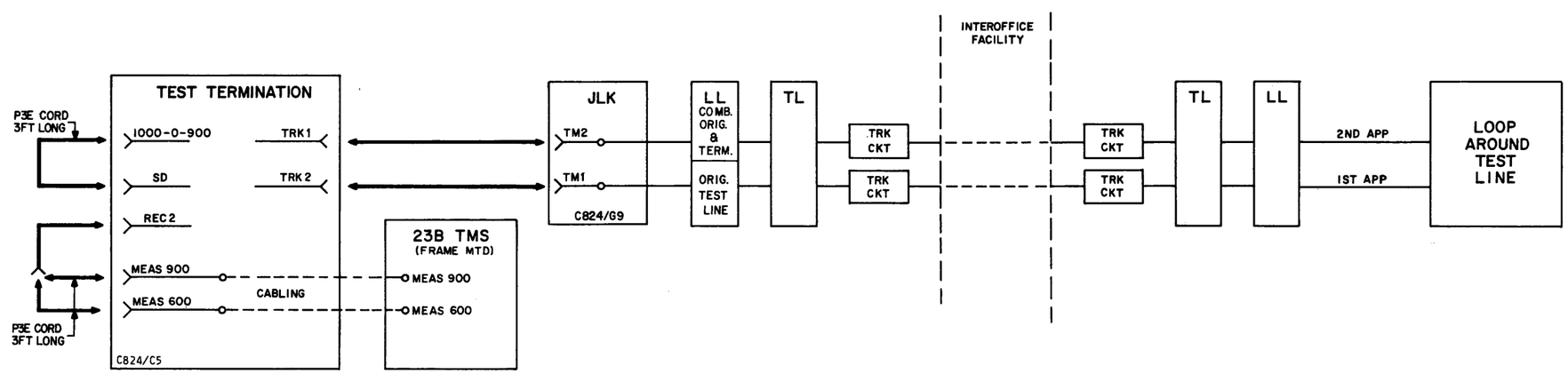

ISSUE 3

PATCH CORD DIAGRAM FOR TRUNK TRANSMISSION TESTING

SFD-10-01-C825

BELL TELEPHONE LABORATORIES INCORPORATED

DWG SIZE 6S

PRINTED IN U. S. A.

SFD-10-01-C825

ESTABLISHING INCOMING TRUNK CONNECTION

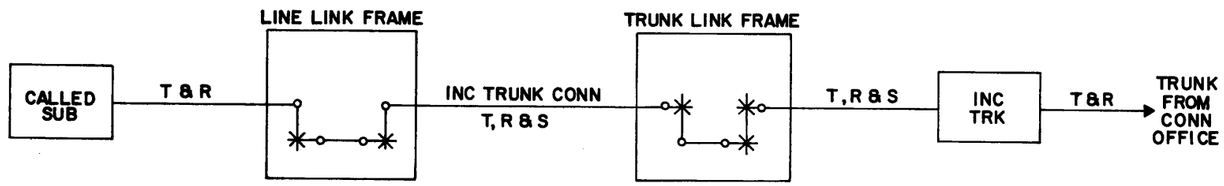

INDEX

CAUTION!

DUE TO THE SIMPLIFIED NATURE OF THIS DOCUMENT, INFORMATION SHOWN MAY NOT BE COMPLETE.

ISSUE 3

PART DO
TERMINATING CALL
TROUBLE CARD ANALYSIS

SFD-10-01-D001

BELL TELEPHONE LABORATORIES INCORPORATED

SIZE CODE 6S

PRINTED IN U.S.A.

SFD-10-01-D001

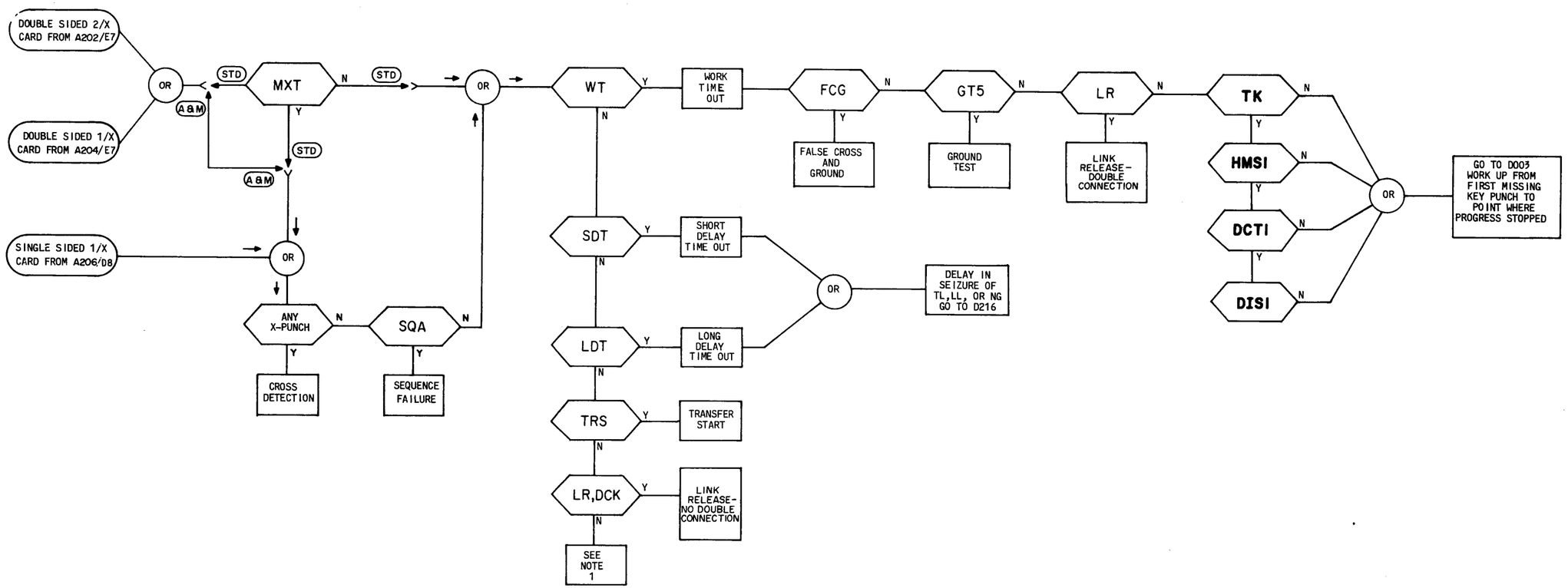

SHEET NOTES:

1. THERE ARE SEVERAL POSSIBILITIES OF OBTAINING A CARD WITH OR WITHOUT AN MXT PUNCH AND WITHOUT ANY X-, SQA, WT, SDT, LDT, TRS, OR LR PUNCHES. THESE INCLUDE:
   A. A FALSELY OPERATED FTC- RELAY IN A NORMAL MARKER WILL OPERATE MXT RELAY CAUSING A TROUBLE RECORD WITH NO X- OR SQA INDICATION. (ONLY DOUBLE SIDED CARDS WILL SHOW AN MXT PUNCH)
   B. A MOMENTARY CROSS IN THE JUNCTOR WALKING CIRCUIT WILL OPERATE MXT RELAY CAUSING A RECORD AS IN (A) ABOVE.
   C. THERE MAY BE MISSING PUNCHES AS THE RESULT OF A DEFECTIVE TROUBLE RECORDER OR DEFECTIVE WIRING OF RELAY CONTACTS IN LEADS TO TROUBLE RECORDER.

ISSUE 4

SFD-10-01-D002

FLOW CHART FOR ANALYSIS OF TROUBLE CARD FOR TERMINATING CLASS OF CALL

DWG SIZE 6S

BELL TELEPHONE LABORATORIES INCORPORATED

PRINTED IN U. S. A.

SFD-10-01-D002

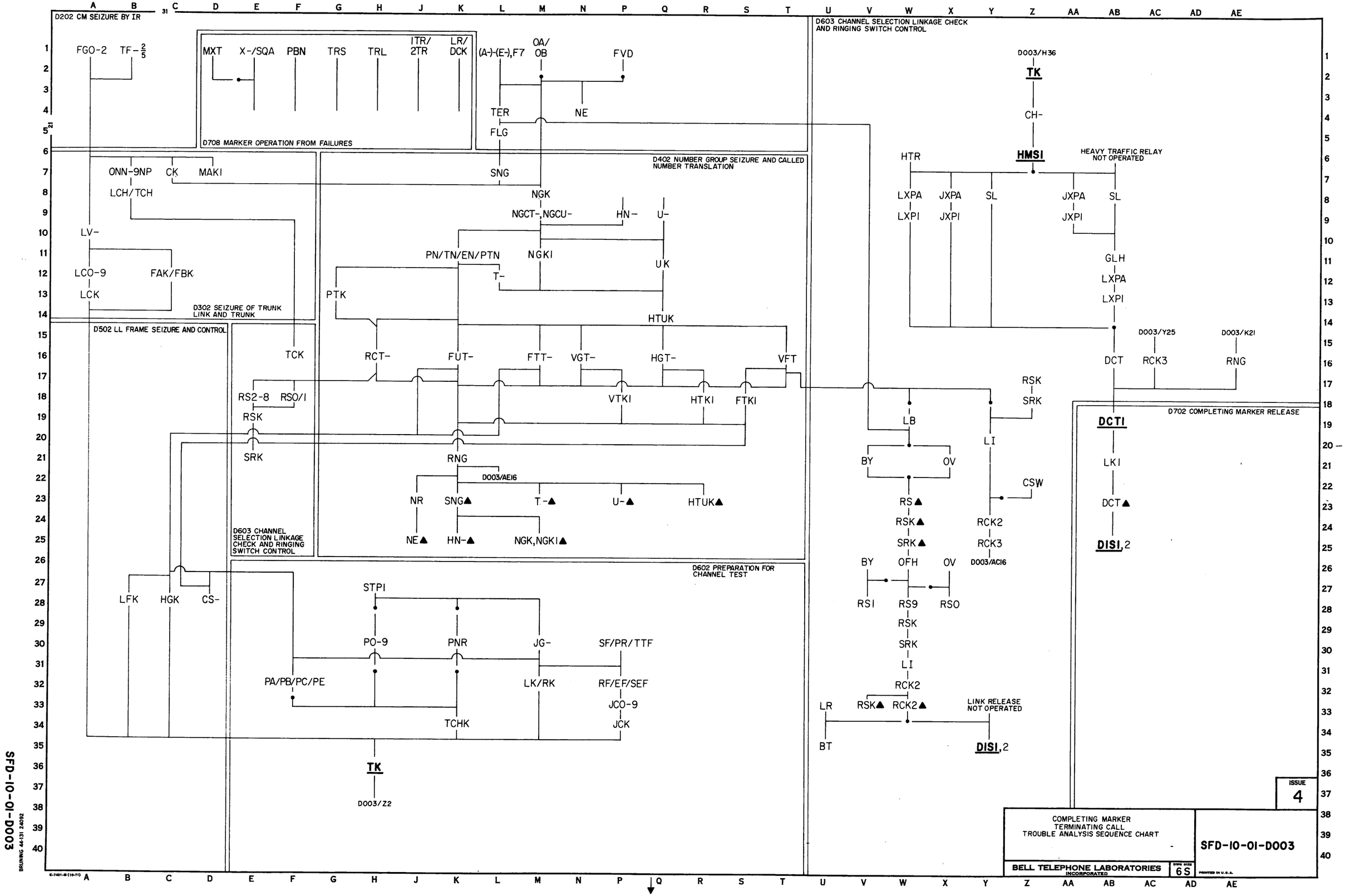
D202 CM SEIZURE BY IR
FGO-2
TF-2/5
D708 MARKER OPERATION FROM FAILURES
MXT
X-/SQA
PBN
TRS
TRL
ITR/2TR
LR/DCK
(A-)-(E-),F7
OA/OB
FVD
TER
NE
FLG
SNG
D402 NUMBER GROUP SEIZURE AND CALLED NUMBER TRANSLATION
ONN-9NP
CK
MAKI
LCH/TCH
NGK
NGCT-,NGCU-
HN-
U-
LV-
PN/TN/EN/PTN
NGKI
UK
LCO-9
FAK/FBK
T-
LCK
PTK
D302 SEIZURE OF TRUNK LINK AND TRUNK
HTUK
D502 LL FRAME SEIZURE AND CONTROL
TCK
RCT-
FUT-
FTT-
VGT-
HGT-
VFT
RS2-8
RSO/1
VTKI
HTKI
FTKI
RSK
SRK
RNG
D003/AE16
NR
SNG▲
T-▲
U-▲
HTUK▲
D603 CHANNEL SELECTION LINKAGE CHECK AND RINGING SWITCH CONTROL
NE▲
HN-▲
NGK,NGKI▲
D603 CHANNEL SELECTION LINKAGE CHECK AND RINGING SWITCH CONTROL
D003/H36
TK
CH-
HMSI
HEAVY TRAFFIC RELAY NOT OPERATED
HTR
LXPA
JXPA
SL
JXPA
SL
LXPI
JXPI
JXPI
GLH
LXPA
LXPI
D003/Y25
D003/K21
DCT
RCK3
RNG
RSK
SRK
LB
LI
D702 COMPLETING MARKER RELEASE
DCTI
BY
OV
LKI
CSW
RS▲
RSK▲
SRK▲
RCK2
RCK3
DCT▲
D003/AC16
DISI,2
BY
OFH
OV
RS1
RS9
RSO
RSK
SRK
LI
RCK2
LR
RSK▲
RCK2▲
LINK RELEASE NOT OPERATED
BT
DISI,2
D602 PREPARATION FOR CHANNEL TEST
LFK
HGK
CS-
STPI
PO-9
PNR
JG-
SF/PR/TTF
PA/PB/PC/PE
LK/RK
RF/EF/SEF
JCO-9
TCHK
JCK
TK
D003/Z2
ISSUE 4
COMPLETING MARKER TERMINATING CALL TROUBLE ANALYSIS SEQUENCE CHART
SFD-10-01-D003
BELL TELEPHONE LABORATORIES INCORPORATED
6S
SFD-10-01-D003
BRUNING 44-131 24092
E-7481-B (10-71)

ESTABLISHING INCOMING TRUNK CONNECTION

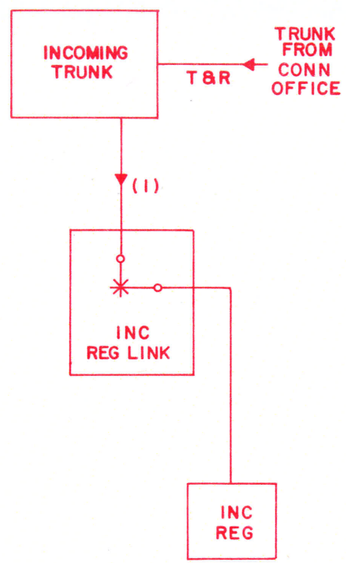

INDEX

CAUTION!

DUE TO THE SIMPLIFIED NATURE OF THIS DOCUMENT, INFORMATION SHOWN MAY NOT BE COMPLETE.

ISSUE 3

PART D1
INCOMING TRUNK SEIZURE, INCOMING REGISTER SELECTION AND PULSING

SFD-10-01-D101

BELL TELEPHONE LABORATORIES INCORPORATED

DWG SIZE 6S

PRINTED IN U.S.A.

SFD-10-01-D101
2 SHEETS, SH 1

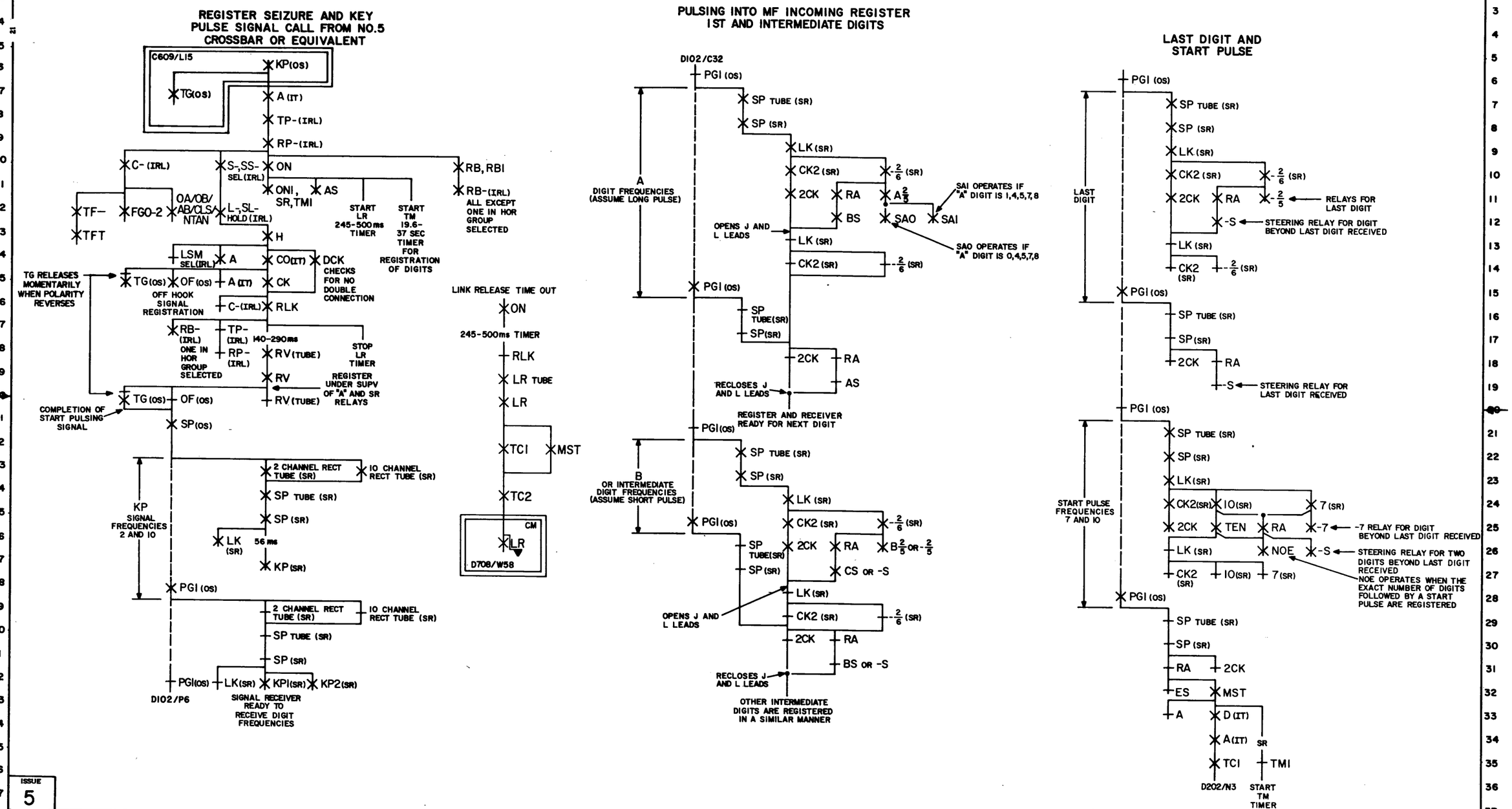

ISSUE 5

SFD-10-01-D102

SEQUENCE CHART
MF INCOMING REGISTER SEIZURE AND PULSING

6S

BELL TELEPHONE LABORATORIES INCORPORATED

SFD-10-01-D102

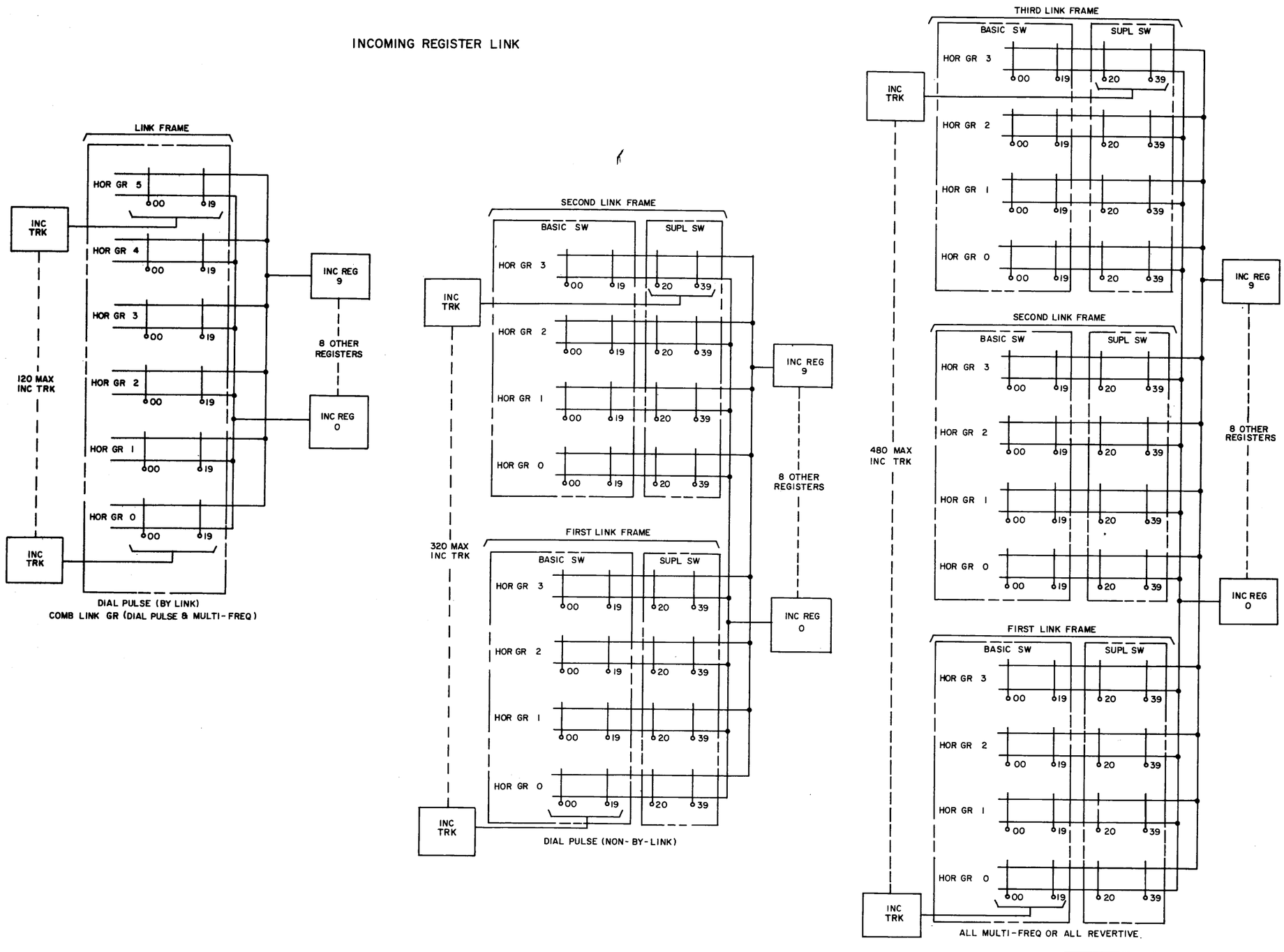

ISSUE 4

INCOMING REGISTER LINK ARRANGEMENTS

SFD-10-01-D103

BELL TELEPHONE LABORATORIES INCORPORATED

6S

PRINTED IN U.S.A.

SFD-10-01-D103

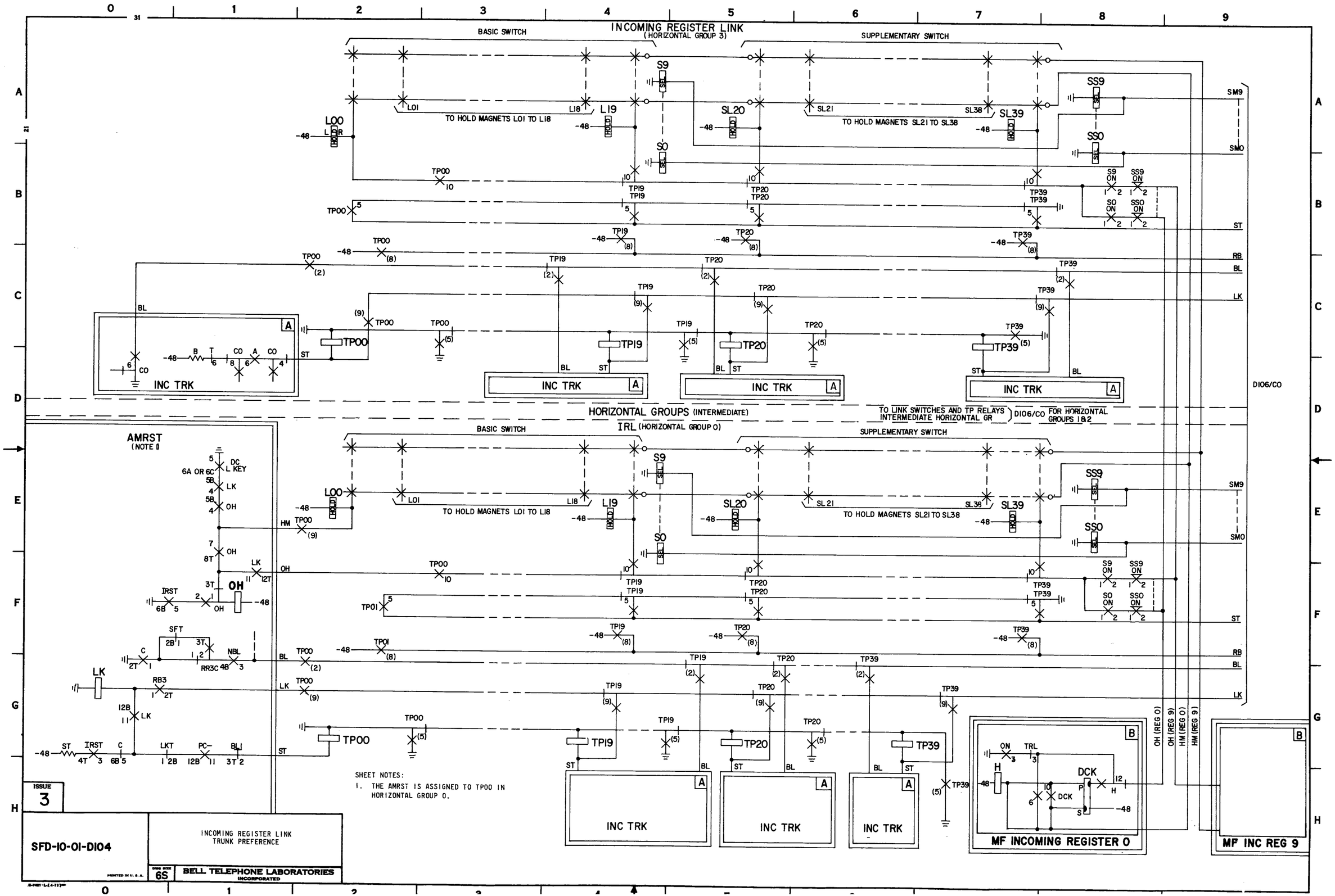
INCOMING REGISTER LINK
(HORIZONTAL GROUP 3)
BASIC SWITCH
SUPPLEMENTARY SWITCH
TO HOLD MAGNETS L01 TO L18
TO HOLD MAGNETS SL21 TO SL38
HORIZONTAL GROUPS (INTERMEDIATE)
TO LINK SWITCHES AND TP RELAYS INTERMEDIATE HORIZONTAL GR
D106/CO FOR HORIZONTAL GROUPS 1&2
D106/CO
IRL (HORIZONTAL GROUP 0)
AMRST
(NOTE 1)
INC TRK
MF INCOMING REGISTER 0
MF INC REG 9
OH (REG 0)
OH (REG 9)
HM (REG 0)
HM (REG 9)
SHEET NOTES:
1. THE AMRST IS ASSIGNED TO TP00 IN HORIZONTAL GROUP 0.
ISSUE 3
SFD-10-01-D104
INCOMING REGISTER LINK
TRUNK PREFERENCE
BELL TELEPHONE LABORATORIES
INCORPORATED
SFD-10-01-D104

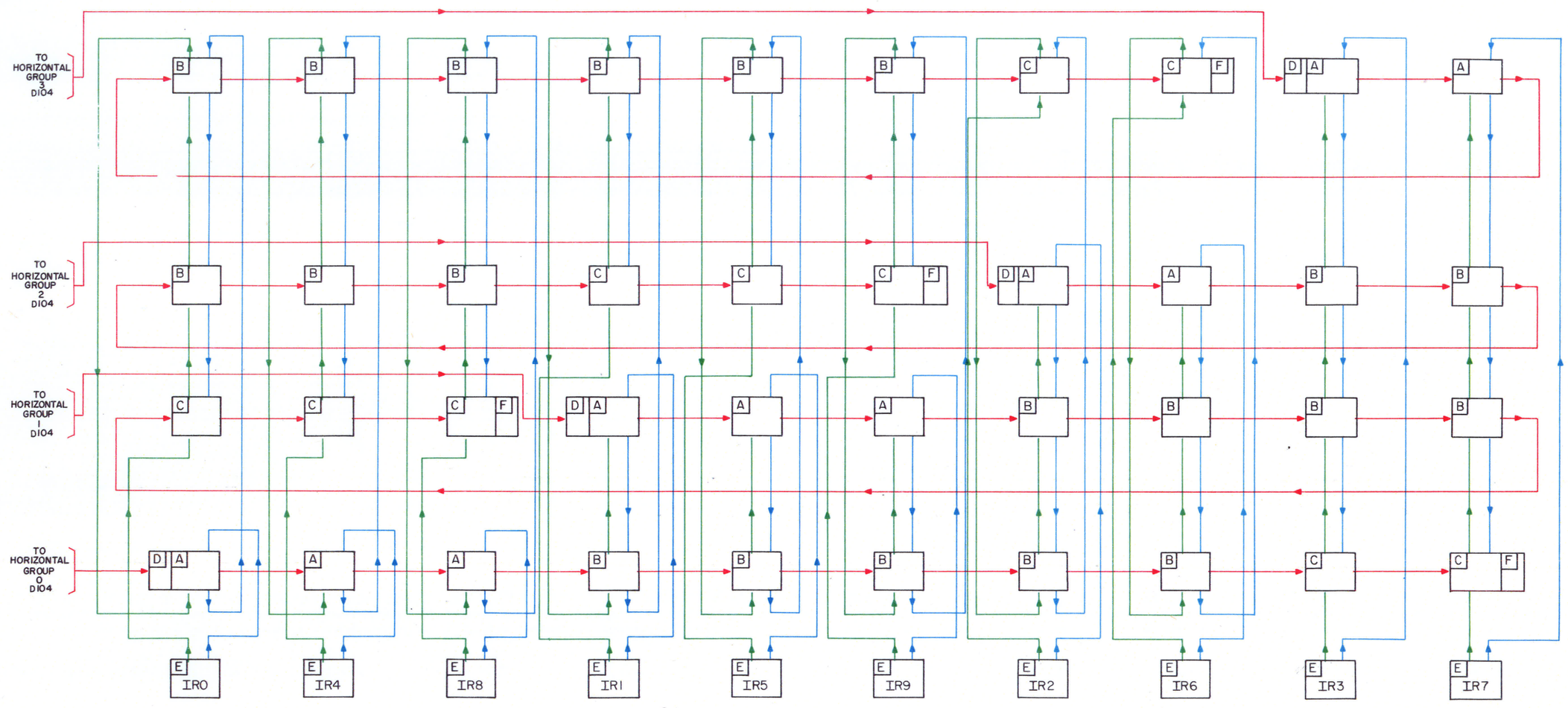

SHEET NOTES:

1. FOR ARRANGEMENT OF CHAIN CIRCUITS WITH MORE THAN ONE IRL FRAME IN LINK GROUP SEE SD-26048-01 FS 101.
2. COMBINATIONS OF INCOMING REGISTER LINK BLOCKS DESIGNATED [A] THRU [D] AND [F] SHOWN IN VERTICAL ROWS ARE ASSOCIATED WITH THE INCOMING REGISTER DESIGNATED [E] AT THE BOTTOM OF EACH VERTICAL ROW. COMBINATIONS OF THE SAME BLOCKS IN HORIZONTAL ROWS ARE ASSOCIATED WITH A HORIZONTAL GROUP.
3. SEE SHEETS DIO6 & DIO7 FOR DETAILED SCHEMATICS FOR [A] THRU [F]

WORK CHAIN (LK, BL, SM, TF AND LO LEADS)
PREFERENCE CHAIN (B, B1 AND B2 LEADS)
START CHAIN (ST LEAD)

ISSUE 4

ARRANGEMENT OF CHAIN CIRCUITS IN AN IRL FRAME (ALL TEN REGISTERS EQUIPPED, WITH ONLY ONE IRL FRAME IN LINK GROUP)

SFD-10-01-DIO5

BELL TELEPHONE LABORATORIES INCORPORATED

DWG SIZE 6S

PRINTED IN U. S. A.

SFD-10-01-DIO5
4 SHEETS, SH 1

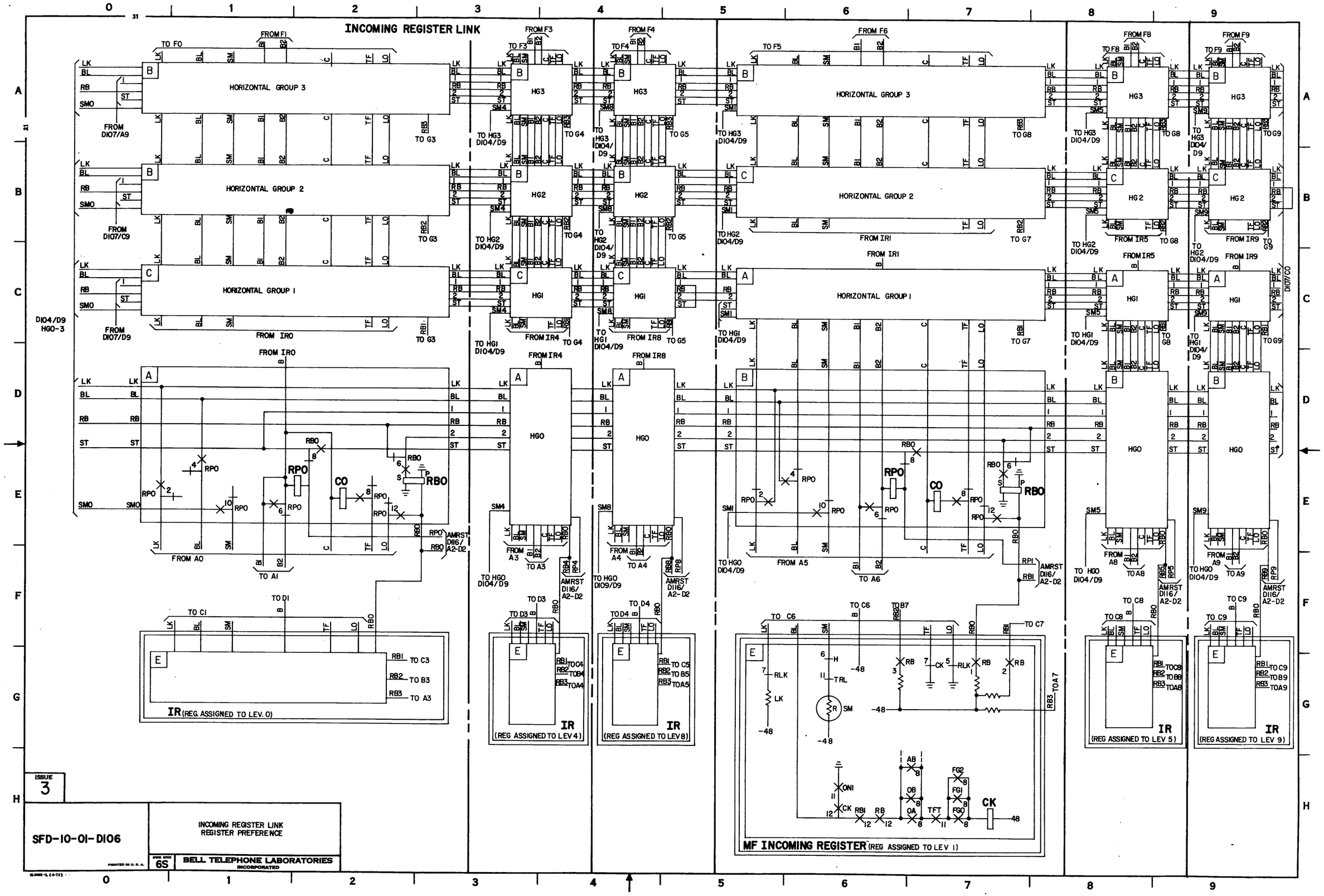

SFD-10-01-D106

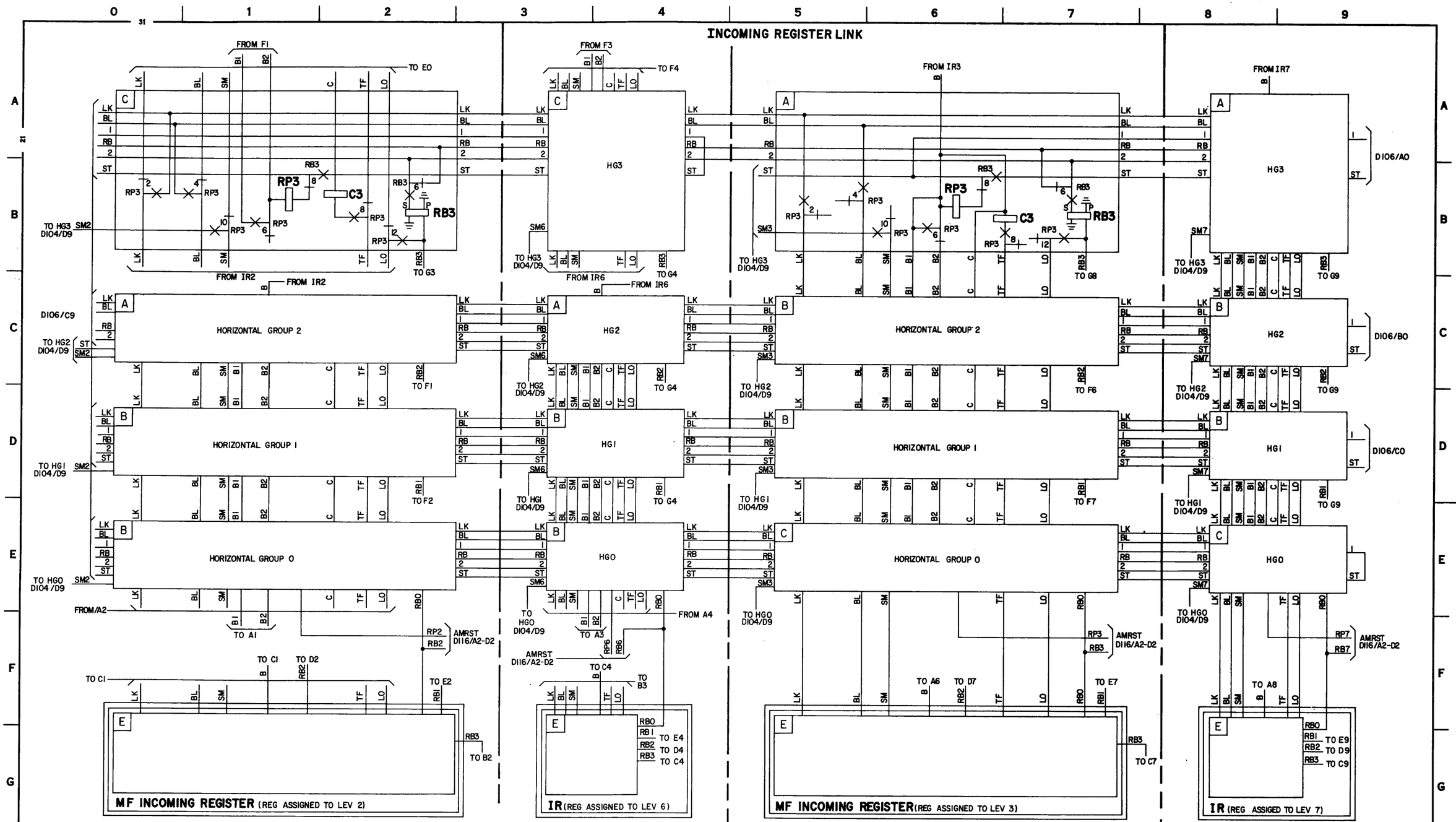

SHEET NOTES:

1. INTERCONNECT ST CHAIN AS SHOWN ON DIO5. OTHER LEADS MULT TO ALL PREFERENCE BLOCKS (A,B OR C) IN SAME HORIZONTAL GROUP.
2. BLOCK "A" REPRESENTS THE START OF THE PREFERENCE CHAIN AND END OF THE WORK CHAIN. BLOCK "B" IS AN INTERMEDIATE REPRESENTATION OF BOTH CHAINS. BLOCK "C" REPRESENTS THE START OF THE WORK CHAIN AND END OF THE PREFERENCE CHAIN
3. INTERCONNECT THE WORK AND PREFERENCE CHAIN LEADS AS SHOWN ON DIO5.
4. THE NUMERICAL DESIGNATION OF THE RP- AND RB- RELAYS CORRESPONDS TO THE HORIZONTAL GROUP NUMBER. THE SM- LEAD NUMERICAL DESIGNATION CORRESPONDS TO THE INCOMING REGISTER NUMBER WHICH IS DERIVED FROM ITS ASSIGNMENT ON THE IRL SWITCH LEVEL.
5. BLOCK "D" ON DIO5 REPRESENTS THE INITIAL APPEARANCE OF THE "ST" CHAIN OF THE PREFERENCE CIRCUIT. BLOCK "F" ON DIO5 REPRESENTS THE END OF THE "ST" CHAIN OF THE PREFERENCE CIRCUIT.

ISSUE 3

INCOMING REGISTER LINK
REGISTER PREFERENCE

SFD-10-01-D107

BELL TELEPHONE LABORATORIES INCORPORATED

6S

PRINTED IN U.S.A.

SFD-10-01-D107

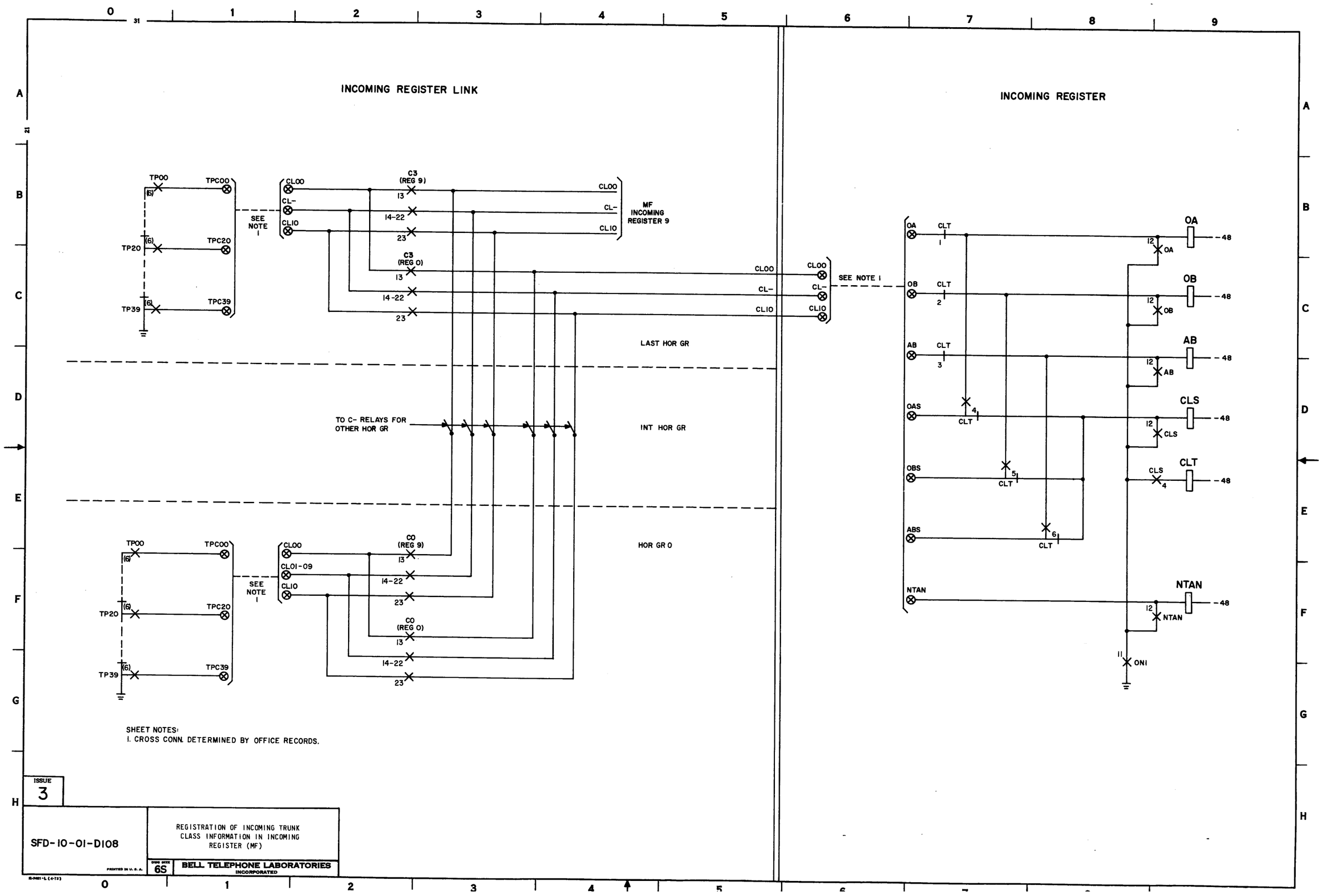

SHEET NOTES:
1. CROSS CONN. DETERMINED BY OFFICE RECORDS.

ISSUE 3

SFD-10-01-D108

REGISTRATION OF INCOMING TRUNK CLASS INFORMATION IN INCOMING REGISTER (MF)

6S

BELL TELEPHONE LABORATORIES INCORPORATED

PRINTED IN U.S.A.

SFD-10-01-D108

INCOMING REGISTER LINK

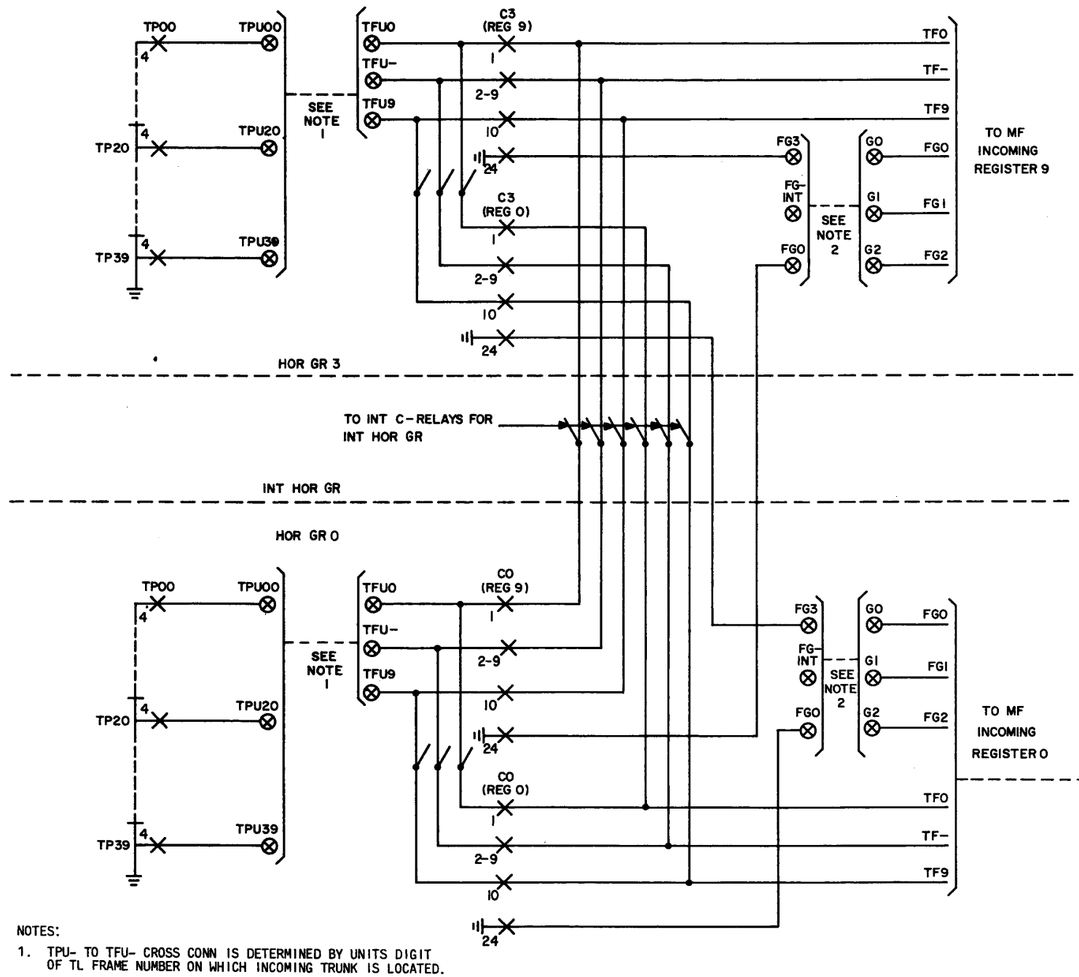

NOTES:

1. TPU- TO TFU- CROSS CONN IS DETERMINED BY UNITS DIGIT OF TL FRAME NUMBER ON WHICH INCOMING TRUNK IS LOCATED.
2. FG- TO G- CROSS CONN IS DETERMINED BY HOR GROUP AND FG OR TENS DIGIT OF TL FRAME NUMBER ON WHICH INCOMING TRUNK IS LOCATED.

INCOMING REGISTER

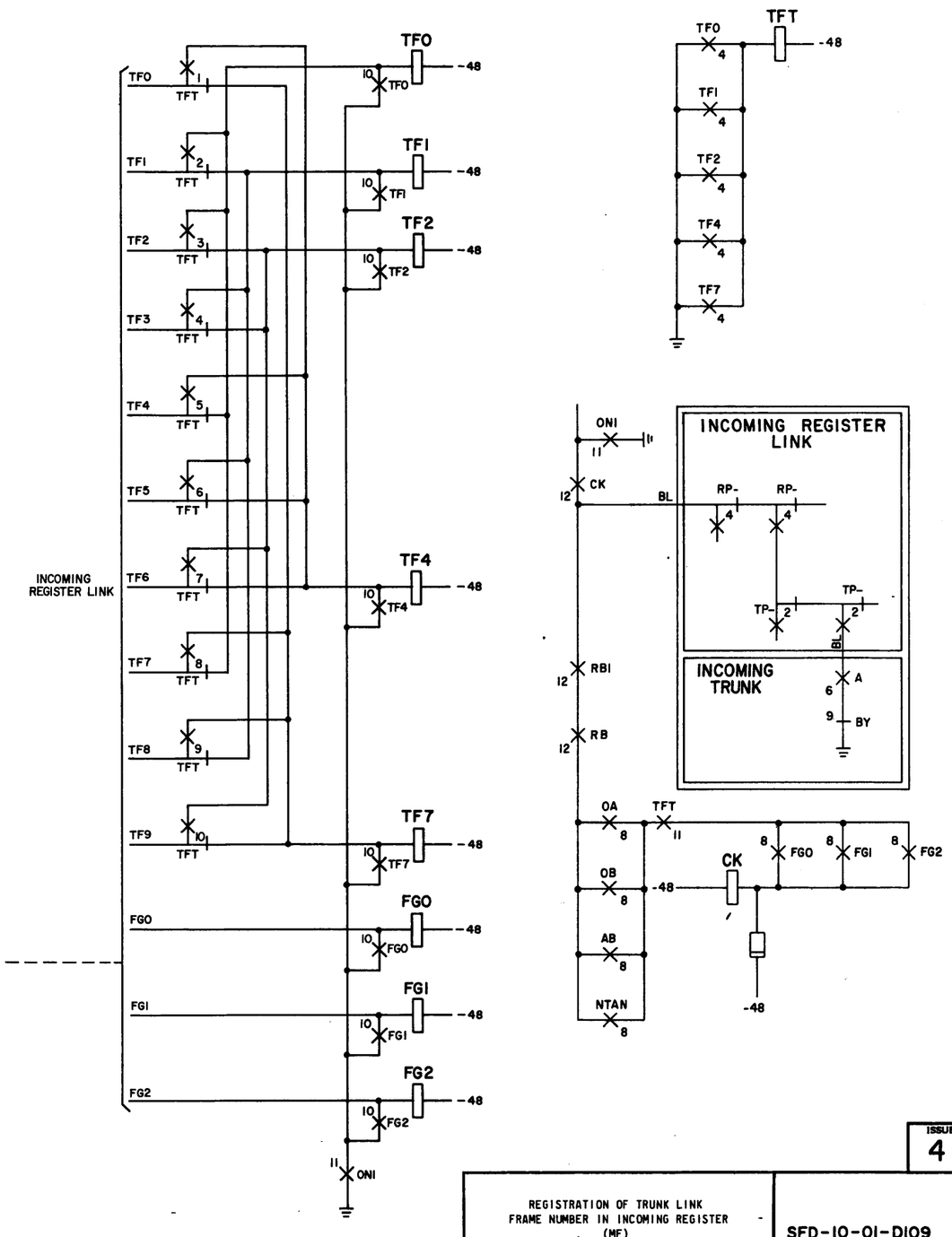

ISSUE 4

REGISTRATION OF TRUNK LINK FRAME NUMBER IN INCOMING REGISTER (MF)

BELL TELEPHONE LABORATORIES INCORPORATED

DWG SIZE 6S

SFD-10-01-D109

PRINTED IN U.S.A.

SFD-10-01-D109

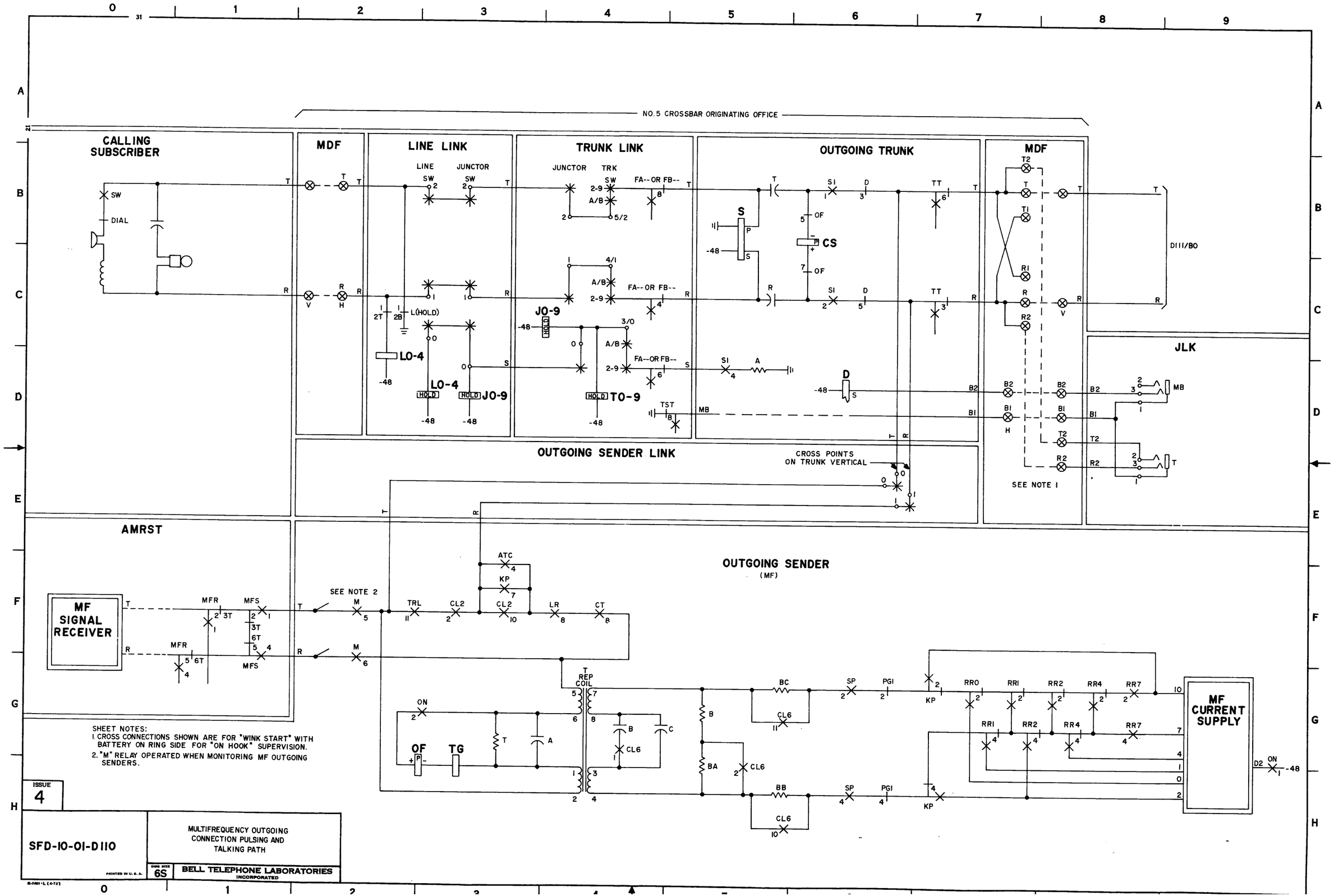

SHEET NOTES:
1. CROSS CONNECTIONS SHOWN ARE FOR "WINK START" WITH BATTERY ON RING SIDE FOR "ON HOOK" SUPERVISION.
2. "M" RELAY OPERATED WHEN MONITORING MF OUTGOING SENDERS.

ISSUE 4

SFD-10-01-D110

MULTIFREQUENCY OUTGOING CONNECTION PULSING AND TALKING PATH

DWG SIZE 6S

BELL TELEPHONE LABORATORIES INCORPORATED

PRINTED IN U.S.A.

E-74811-L (4-72)

SFD-10-01-D110

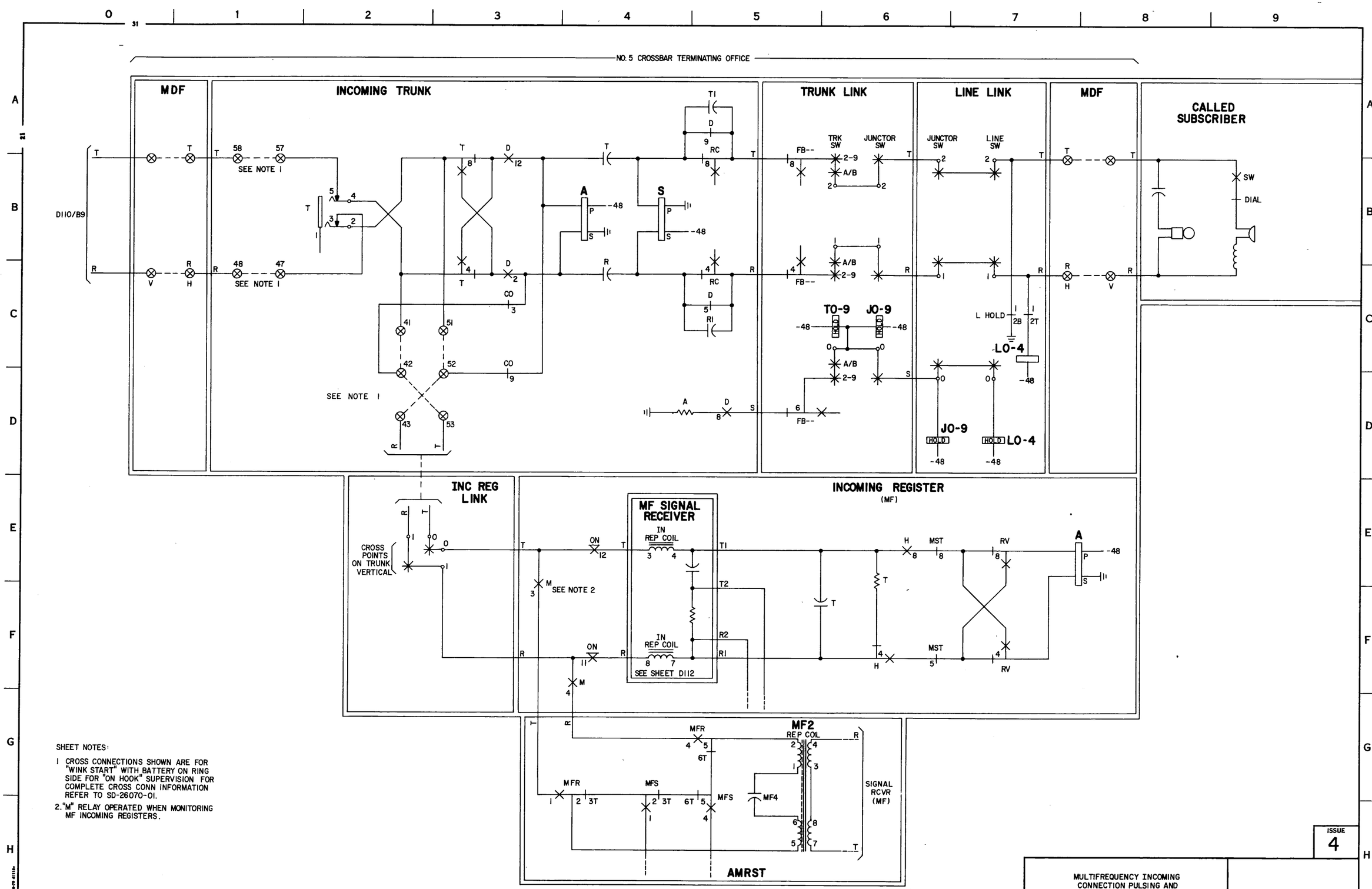

SHEET NOTES:

1 CROSS CONNECTIONS SHOWN ARE FOR "WINK START" WITH BATTERY ON RING SIDE FOR "ON HOOK" SUPERVISION FOR COMPLETE CROSS CONN INFORMATION REFER TO SD-26070-01.

2. "M" RELAY OPERATED WHEN MONITORING MF INCOMING REGISTERS.

ISSUE 4

MULTIFREQUENCY INCOMING CONNECTION PULSING AND TALKING PATH

SFD-10-01-D111

BELL TELEPHONE LABORATORIES INCORPORATED

DWG SIZE 6S

PRINTED IN U.S.A.

SFD-10-01-D111

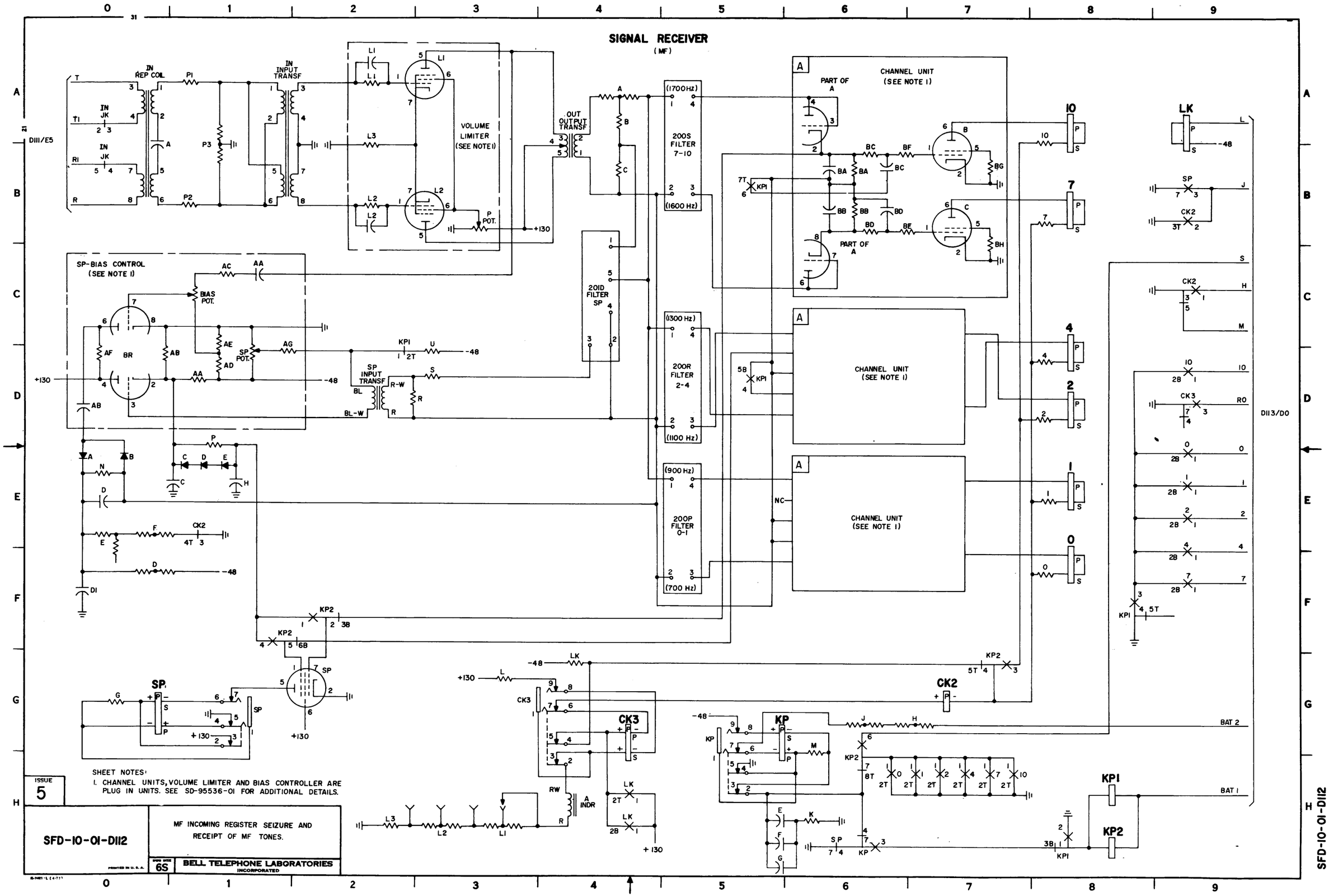
SIGNAL RECEIVER
(MF)
IN REP COIL
IN INPUT TRANSF
VOLUME LIMITER (SEE NOTE 1)
OUT OUTPUT TRANSF
200S FILTER 7-10
200R FILTER 2-4
200P FILTER 0-1
(1700 Hz)
(1600 Hz)
(1300 Hz)
(1100 Hz)
(900 Hz)
(700 Hz)
CHANNEL UNIT (SEE NOTE 1)
PART OF A
SP-BIAS CONTROL (SEE NOTE 1)
BIAS POT.
SP POT.
SP INPUT TRANSF
201D FILTER SP
P POT.
D111/E5
D113/D0
SP
CK2
CK3
KP
KP1
KP2
LK
BAT 2
BAT 1
SHEET NOTES:
1. CHANNEL UNITS, VOLUME LIMITER AND BIAS CONTROLLER ARE PLUG IN UNITS. SEE SD-95536-01 FOR ADDITIONAL DETAILS.
ISSUE 5
SFD-10-01-D112
MF INCOMING REGISTER SEIZURE AND RECEIPT OF MF TONES.
DWG SIZE 6S
BELL TELEPHONE LABORATORIES INCORPORATED
PRINTED IN U.S.A.
SFD-10-01-D112

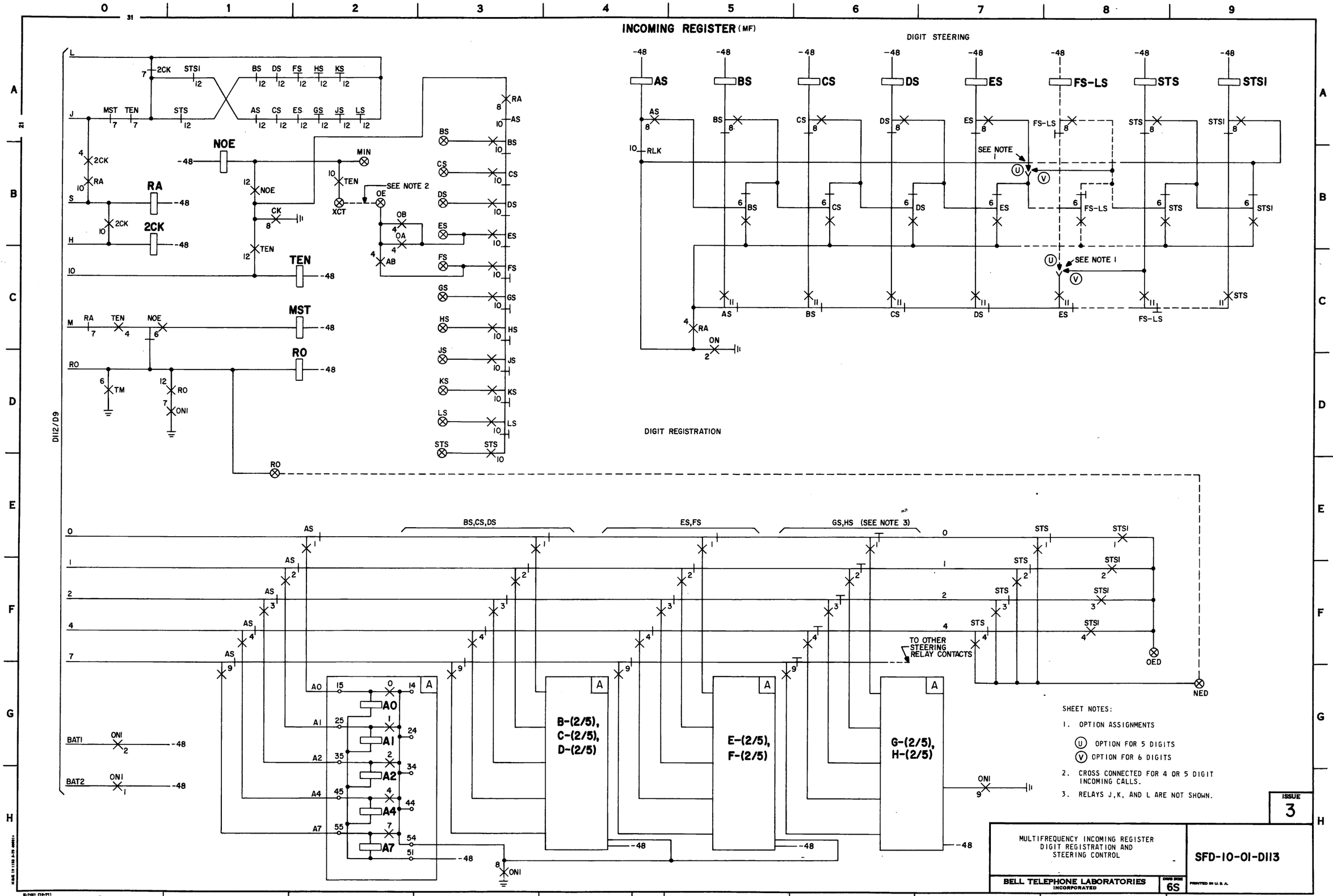
INCOMING REGISTER (MF)
DIGIT STEERING
DIGIT REGISTRATION
AS
BS
CS
DS
ES
FS-LS
STS
STSI
NOE
RA
2CK
TEN
MST
RO
MIN
XCT
OE
OB
OA
AB
ON
ONI
TM
RLK
SEE NOTE 1
SEE NOTE 2
D112/D9
BS,CS,DS
ES,FS
GS,HS (SEE NOTE 3)
TO OTHER STEERING RELAY CONTACTS
OED
NED
A0
A1
A2
A4
A7
BAT1
BAT2
B-(2/5), C-(2/5), D-(2/5)
E-(2/5), F-(2/5)
G-(2/5), H-(2/5)
SHEET NOTES:
1. OPTION ASSIGNMENTS
U OPTION FOR 5 DIGITS
V OPTION FOR 6 DIGITS
2. CROSS CONNECTED FOR 4 OR 5 DIGIT INCOMING CALLS.
3. RELAYS J, K, AND L ARE NOT SHOWN.
ISSUE 3
MULTIFREQUENCY INCOMING REGISTER DIGIT REGISTRATION AND STEERING CONTROL
SFD-10-01-D113
BELL TELEPHONE LABORATORIES INCORPORATED
6S
PRINTED IN U.S.A.
SFD-10-01-D113

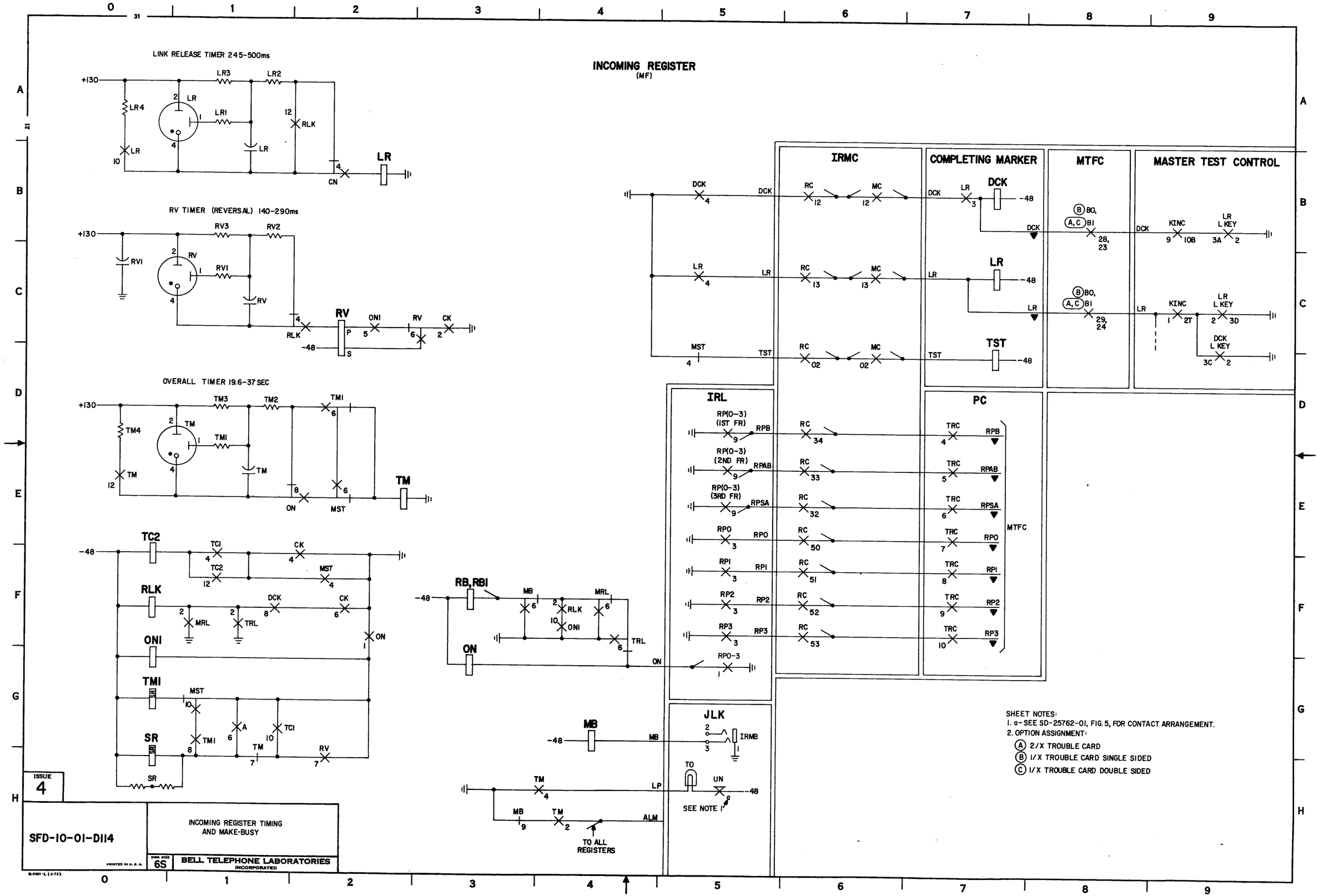
INCOMING REGISTER
(MF)
LINK RELEASE TIMER 245-500ms
RV TIMER (REVERSAL) 140-290ms
OVERALL TIMER 19.6-37 SEC
IRMC
COMPLETING MARKER
MTFC
MASTER TEST CONTROL
IRL
PC
JLK
RB,RBI
MB
SHEET NOTES:
1. a-SEE SD-25762-01, FIG. 5, FOR CONTACT ARRANGEMENT.
2. OPTION ASSIGNMENT:
(A) 2/X TROUBLE CARD
(B) 1/X TROUBLE CARD SINGLE SIDED
(C) 1/X TROUBLE CARD DOUBLE SIDED
ISSUE 4
SFD-10-01-D114
INCOMING REGISTER TIMING AND MAKE-BUSY
BELL TELEPHONE LABORATORIES INCORPORATED
SFD-10-01-D114

COMPLETING MARKER

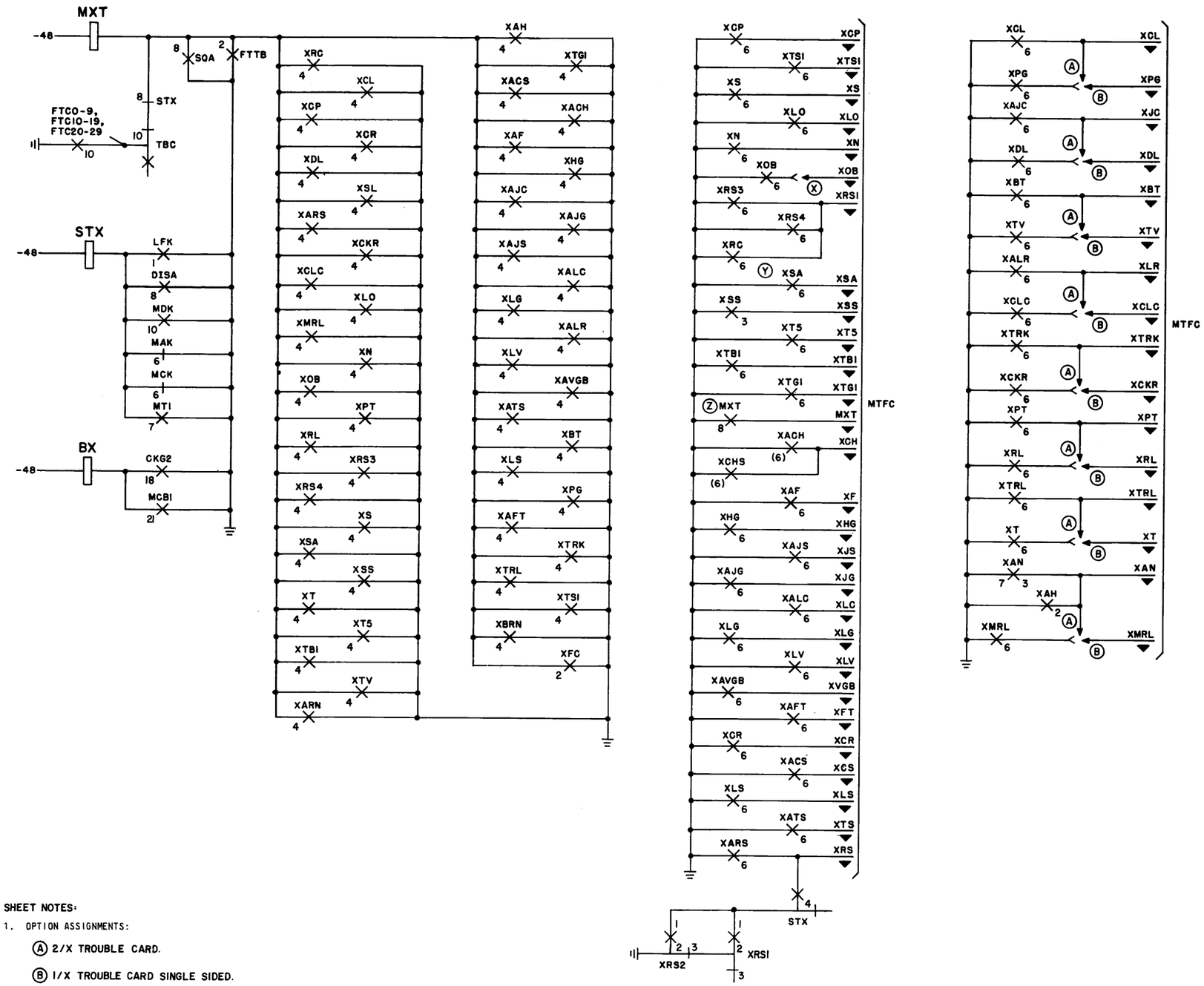

SHEET NOTES:

1. OPTION ASSIGNMENTS:

(A) 2/X TROUBLE CARD.

(B) 1/X TROUBLE CARD SINGLE SIDED.

(X) (A & M) -XOB PUNCH PROVIDED WHEN MXT PUNCH NOT PROVIDED.

(Y) U TYPE SENDER CONN AND AMA PROVIDED.

(Z) MXT PUNCH PROVIDED. (DOUBLE SIDED 1/X OR 2/X CARD.)

ISSUE 3

STANDING CROSS RELAY TROUBLE INDICATIONS

BELL TELEPHONE LABORATORIES INCORPORATED

DWG SIZE 6S

SFD-01-01-D115

PRINTED IN U. S. A.

SFD-01-01-D115

AUTOMATIC MONITOR REGISTER SENDER TEST

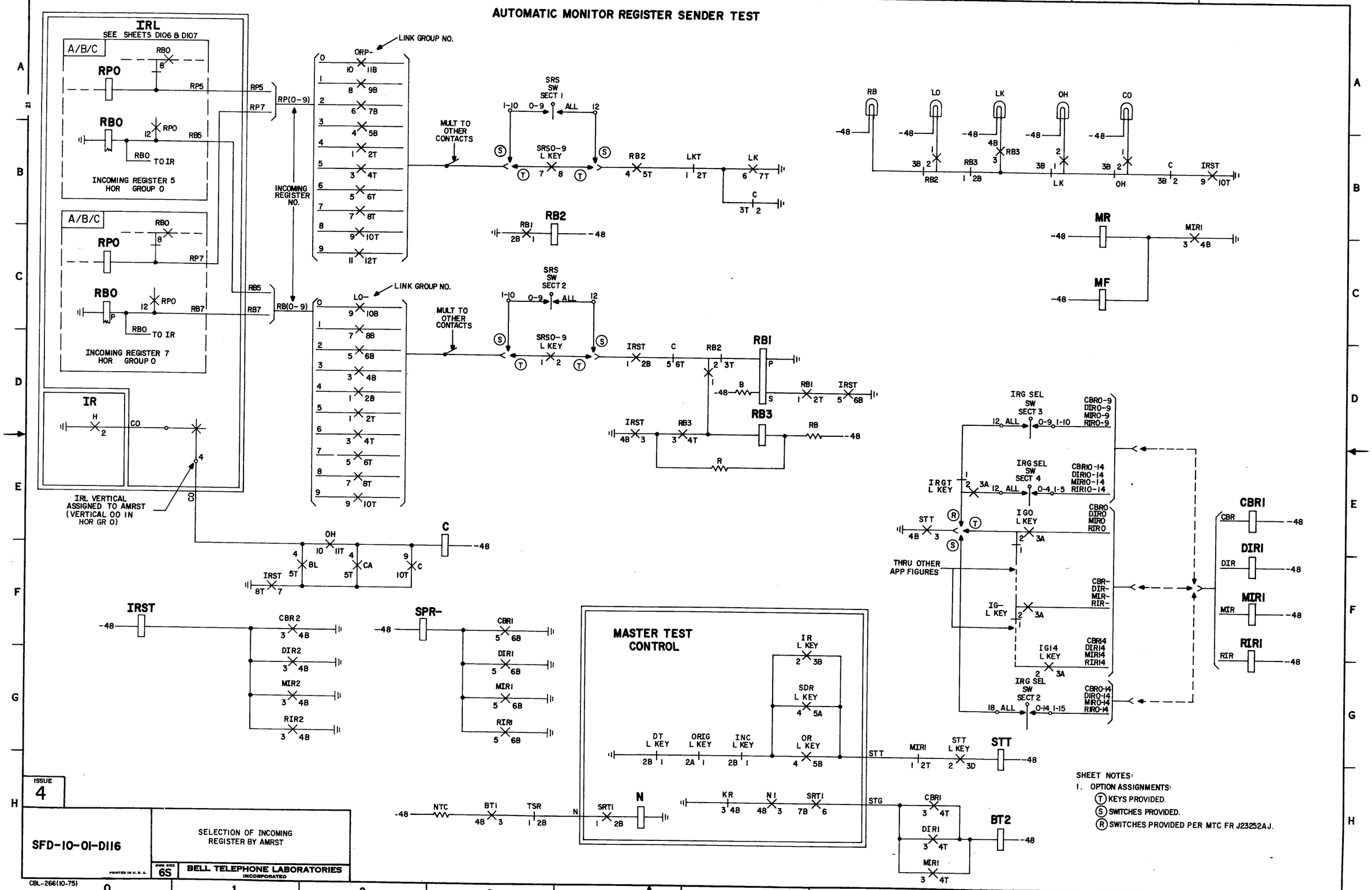

SHEET NOTES:

1. OPTION ASSIGNMENTS:
   - (T) KEYS PROVIDED.
   - (S) SWITCHES PROVIDED.
   - (R) SWITCHES PROVIDED PER MTC FR J23252AJ.

ISSUE 4

SFD-10-01-D116

SELECTION OF INCOMING REGISTER BY AMRST

DWG SIZE 6S

BELL TELEPHONE LABORATORIES INCORPORATED

PRINTED IN U.S.A.

CBL-266(10-75)

SFD-10-01-D116

AUTOMATIC MONITOR REGISTER SENDER TEST

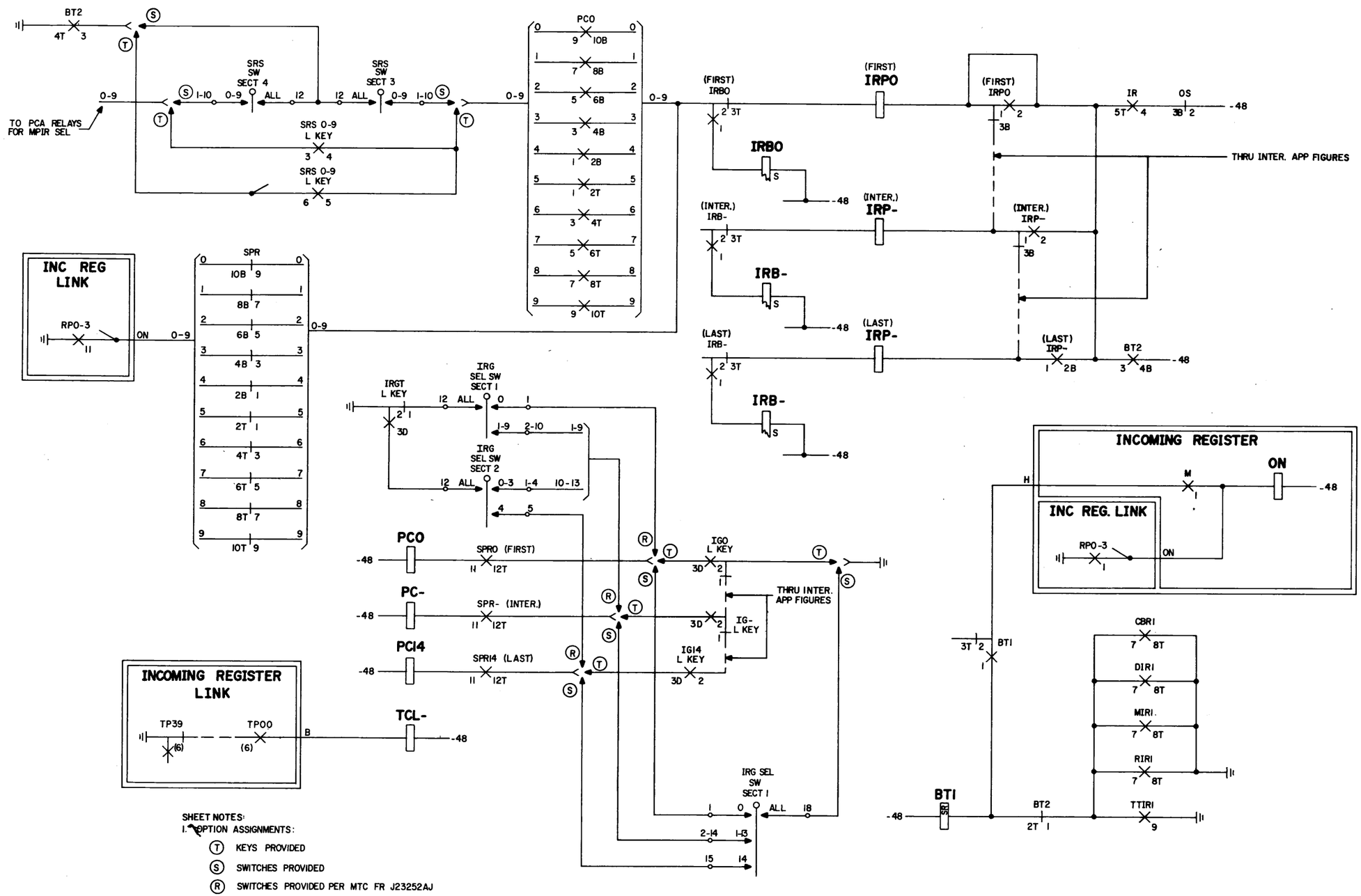

SHEET NOTES:
1. OPTION ASSIGNMENTS:
- (T) KEYS PROVIDED
- (S) SWITCHES PROVIDED
- (R) SWITCHES PROVIDED PER MTC FR J23252AJ

ISSUE 5

SELECTION OF INCOMING REGISTER BY AMRST

SFD-10-01-D117

BELL TELEPHONE LABORATORIES INCORPORATED

6S

PRINTED IN U.S.A.

SFD-10-01-D117

CALL FROM NO. 5 OUTGOING SENDER
(4 OR 5 DIGIT CALL)

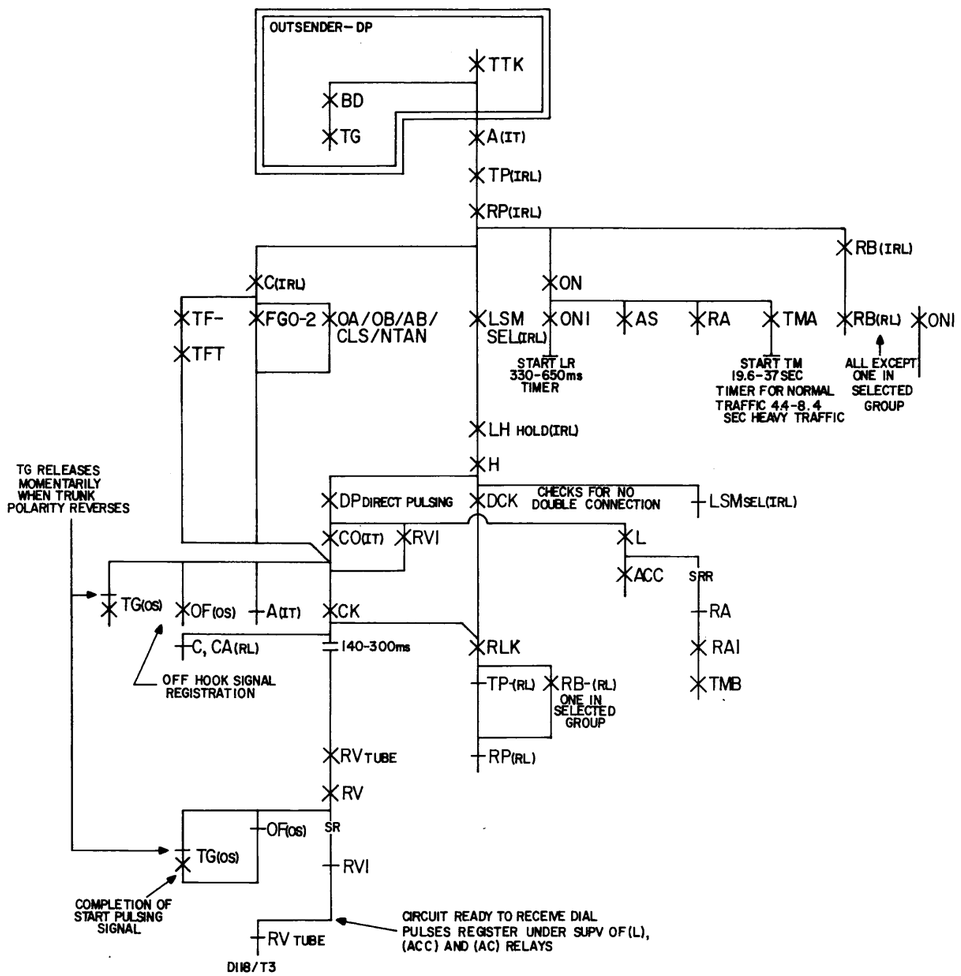

DIALING FIRST DIGIT

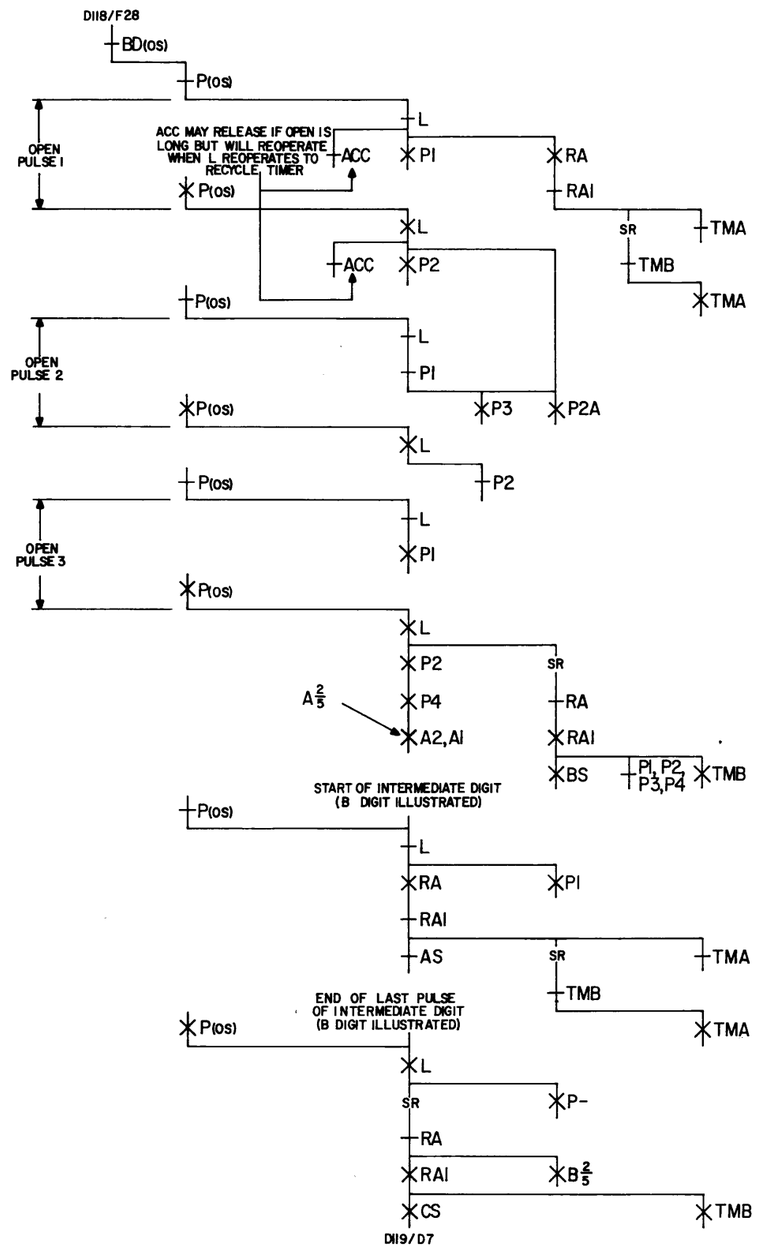

ISSUE 3

SFD-10-01-D118

DIAL PULSE INCOMING REGISTER SEQUENCE CHART

BELL TELEPHONE LABORATORIES INCORPORATED

PRINTED IN U.S.A.

SFD-10-01-D118

CALL FROM NO. 5 OUTGOING SENDER

(4 OR 5 DIGIT CALL)
START OF LAST DIGIT ASSUME 4th DIGIT D

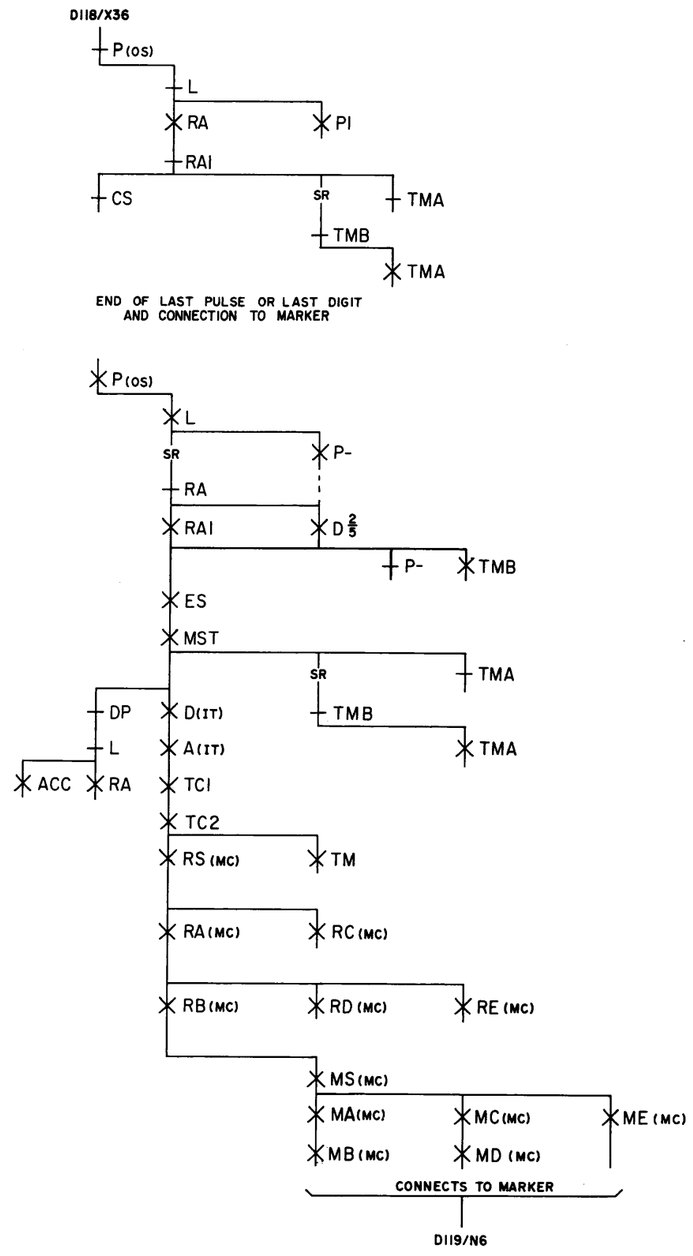

RELEASE OF REGISTER

DIAL PULSE

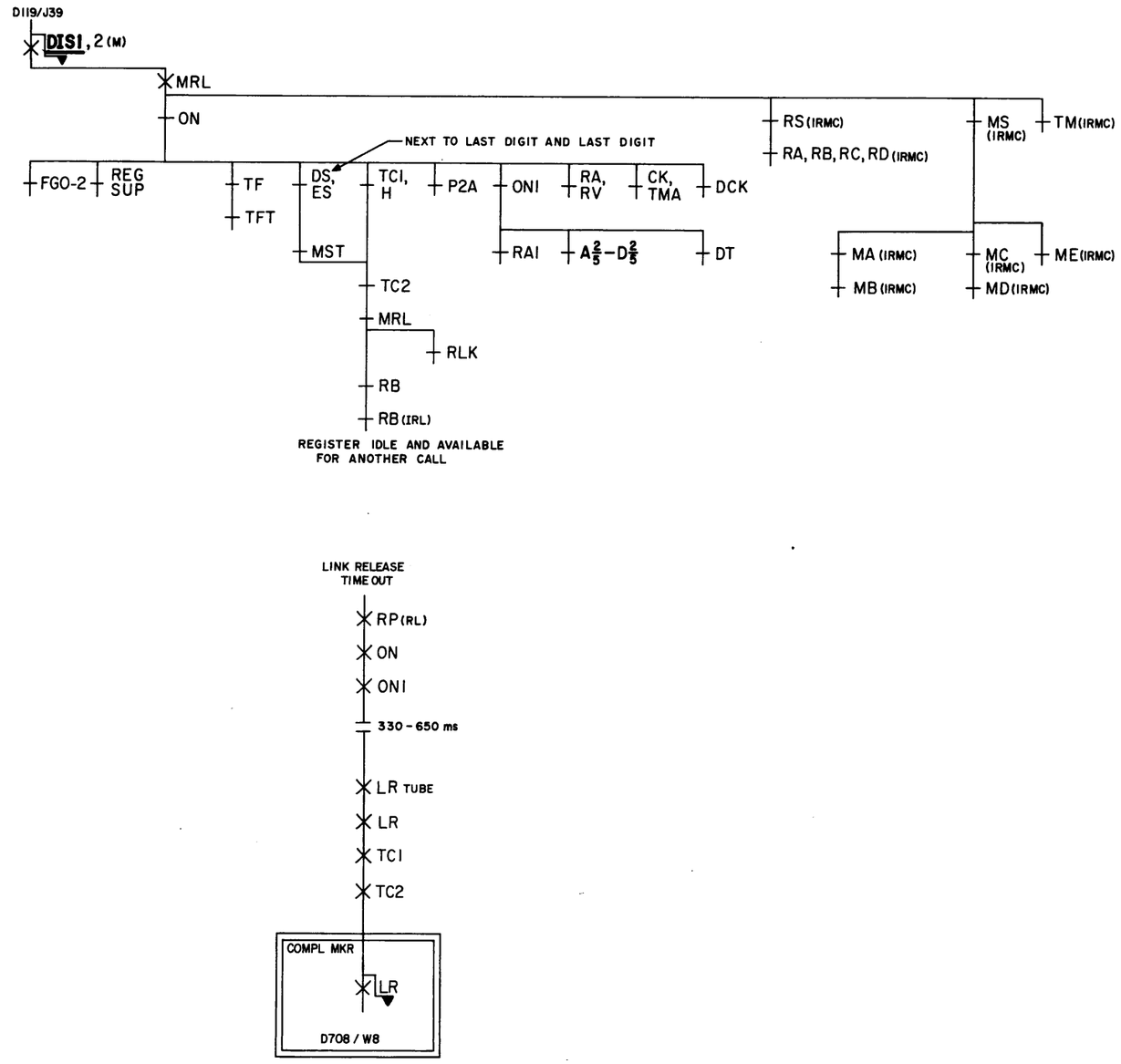

ISSUE 3

DIAL PULSE INCOMING REGISTER SEQUENCE CHART

SFD-10-01-D119

BELL TELEPHONE LABORATORIES INCORPORATED

6S

SFD-10-01-D119

CALL FROM SXS ON BY-LINK TRUNK
(4 OR 5 DIGIT CALL)

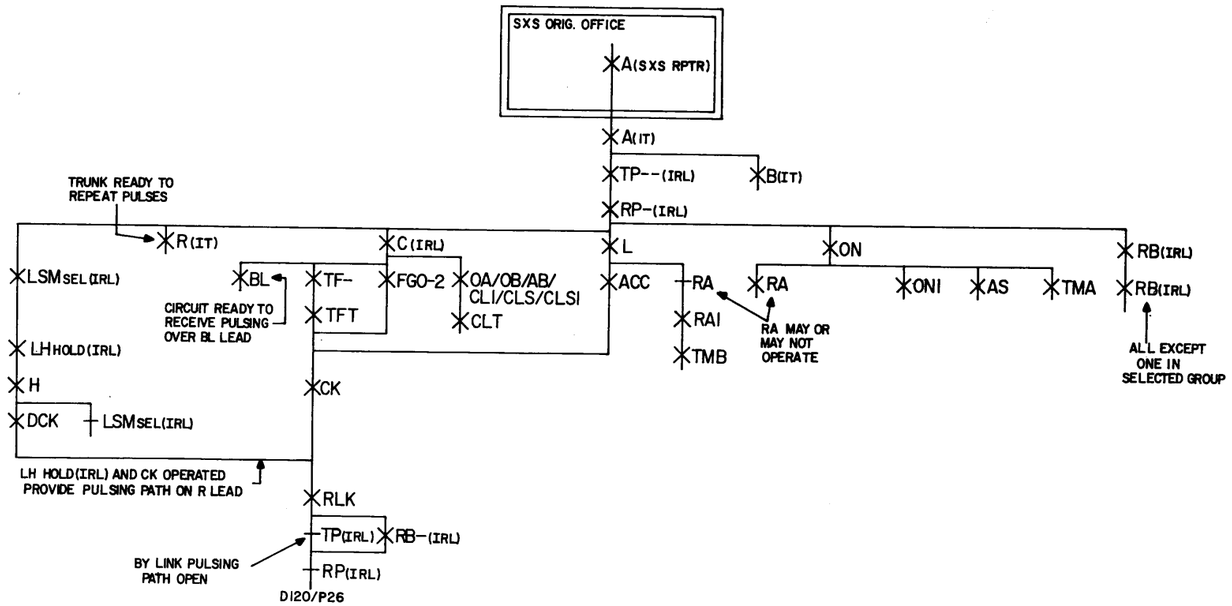

DIALING FIRST DIGIT

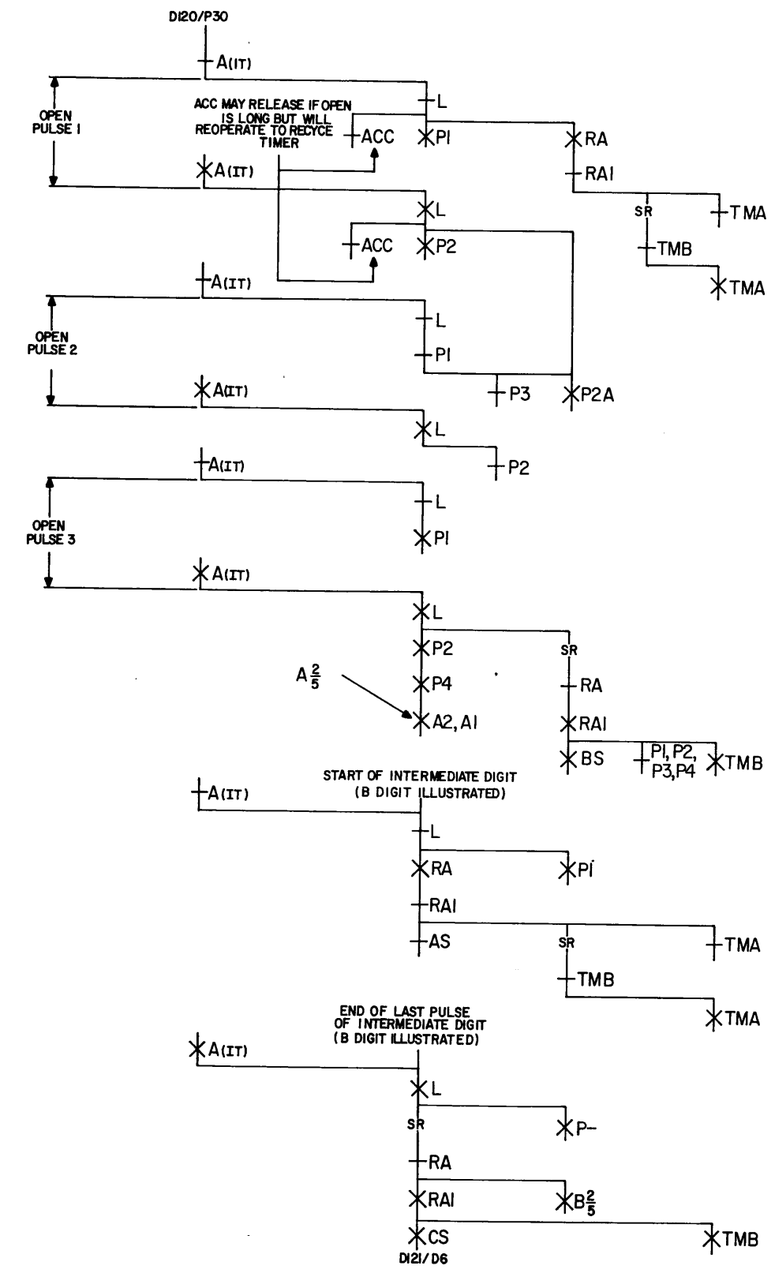

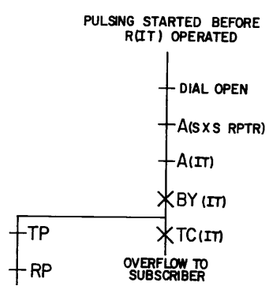

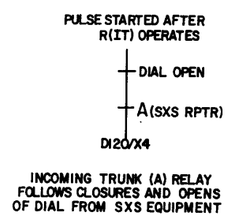

ISSUE 3

SFD-10-01-D120

DIAL PULSE INCOMING REGISTER SEQUENCE CHART

BELL TELEPHONE LABORATORIES INCORPORATED

6S

CBL-267(10-75)

SFD-10-01-D120

CALL FROM SXS ON BY-LINK TRUNK

(4 OR 5 DIGIT CALL)
START OF LAST DIGIT ASSUME 4th DIGIT D

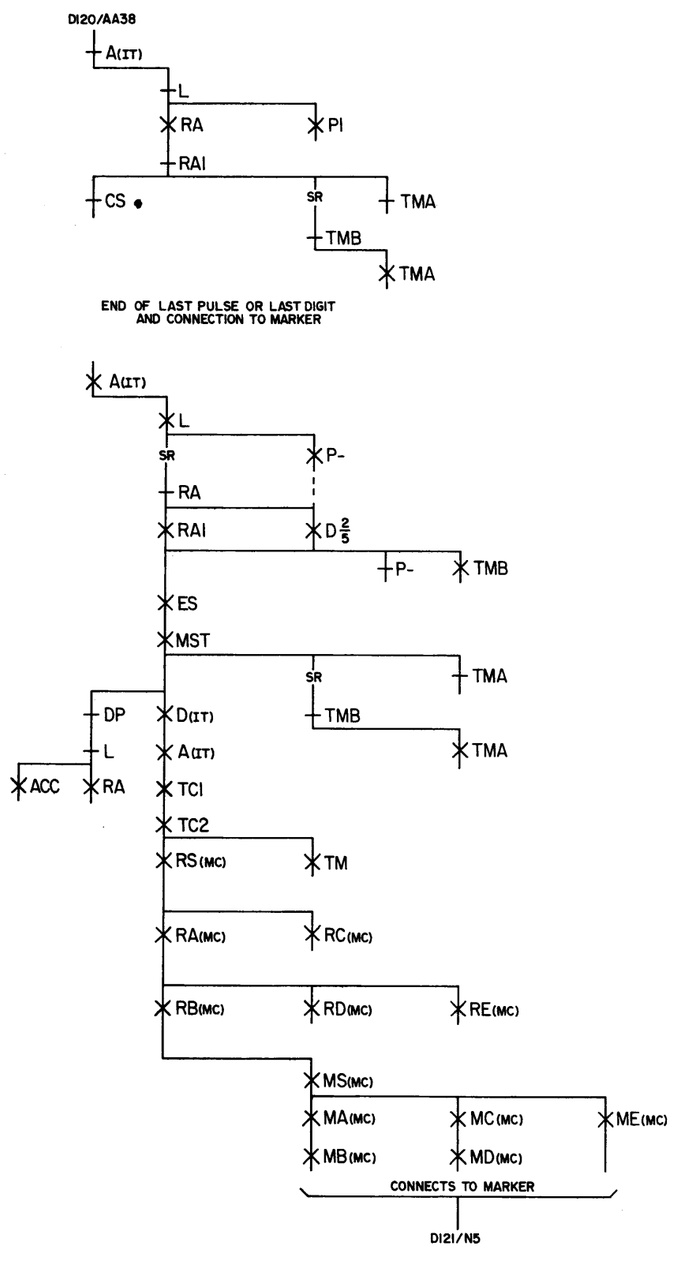

RELEASE OF REGISTER

DIAL PULSE

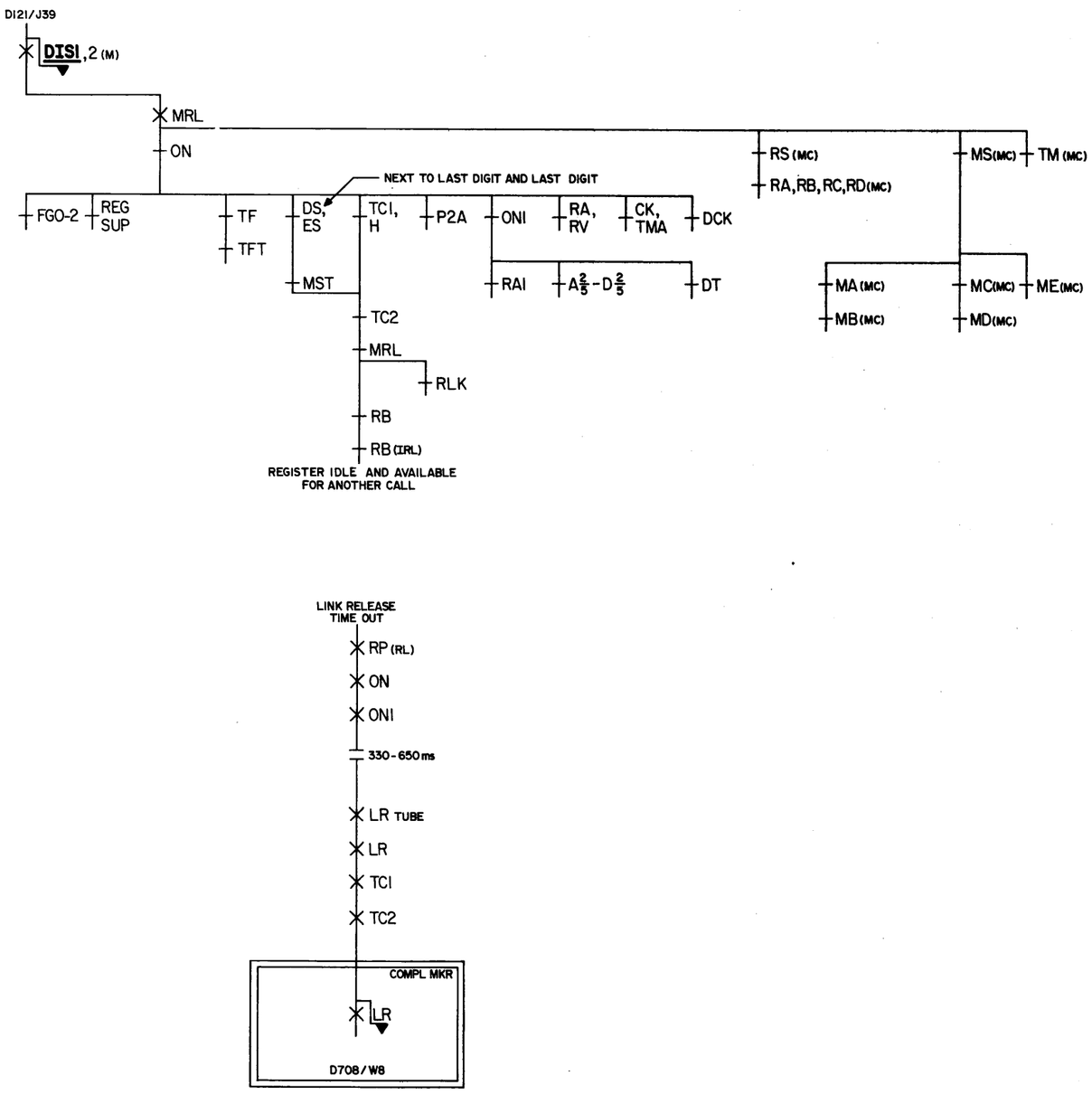

ISSUE 3

DIAL PULSE INCOMING REGISTER SEQUENCE CHART

SFD-10-01-D121

BELL TELEPHONE LABORATORIES INCORPORATED

6S

SFD-10-01-D121

BRUNING 44-131 24092

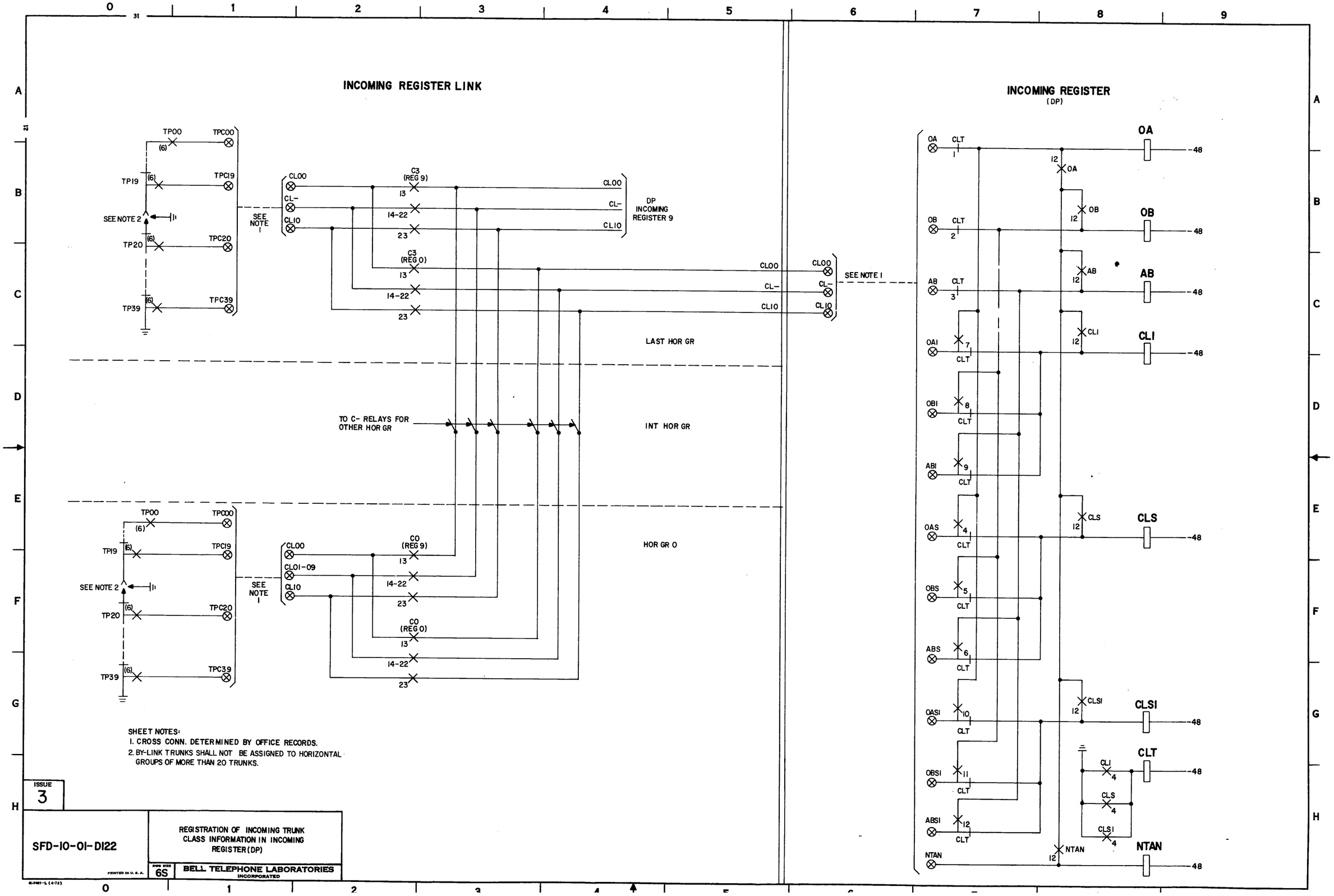

SHEET NOTES:
1. CROSS CONN. DETERMINED BY OFFICE RECORDS.
2. BY-LINK TRUNKS SHALL NOT BE ASSIGNED TO HORIZONTAL GROUPS OF MORE THAN 20 TRUNKS.

ISSUE 3

SFD-10-01-D122

REGISTRATION OF INCOMING TRUNK CLASS INFORMATION IN INCOMING REGISTER (DP)

PRINTED IN U.S.A.

FORM SIZE 6S

BELL TELEPHONE LABORATORIES INCORPORATED

E-74811-L (4-72)

SFD-10-01-D122

INCOMING REGISTER LINK

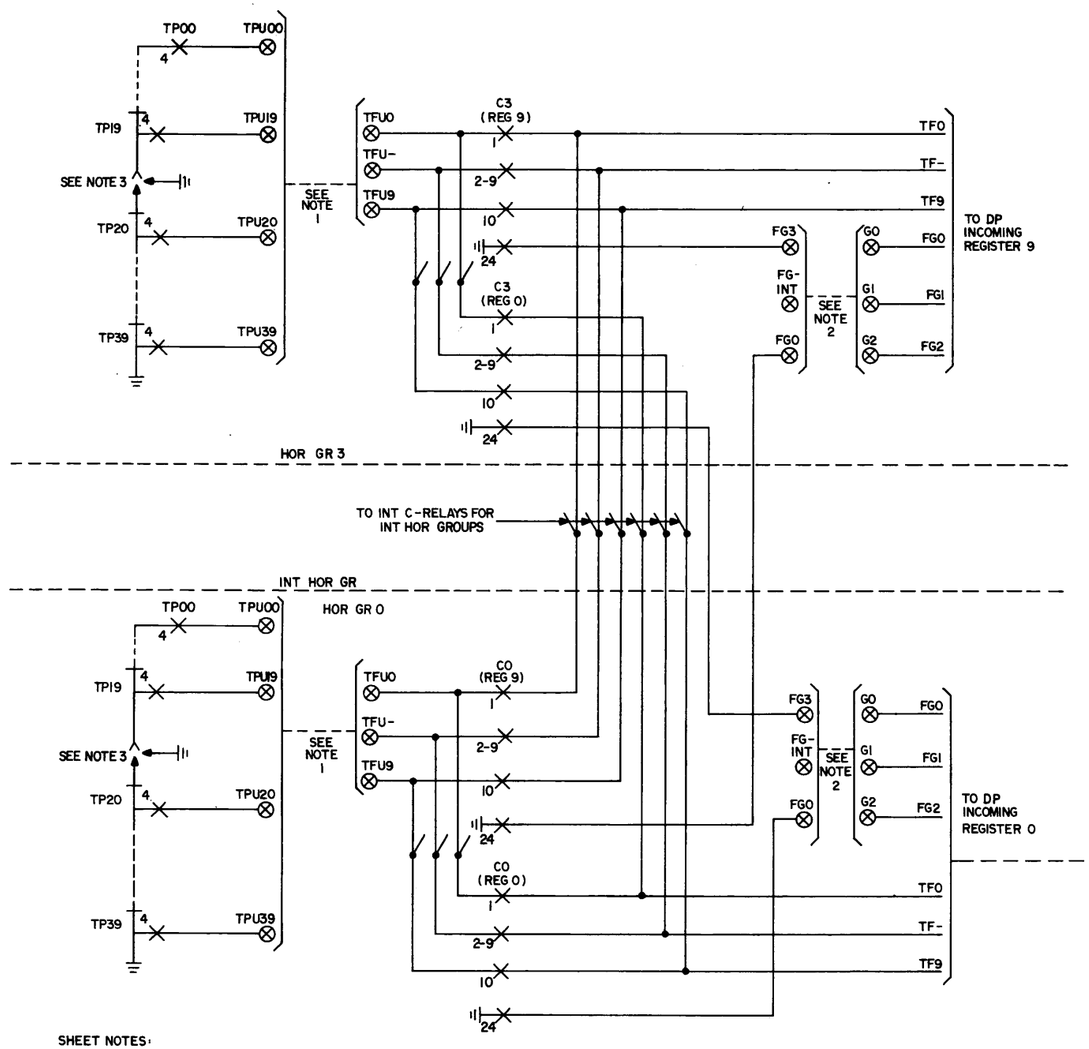

SHEET NOTES:

1. TPU- TO TFU- CROSS CONN IS DETERMINED BY UNITS DIGIT OF TL FRAME NUMBER ON WHICH INCOMING TRUNK IS LOCATED.
2. FS- TO G- CROSS CONN IS DETERMINED BY HOR GROUP AND FG OR TENS DIGIT OF TL FRAME NUMBER ON WHICH INCOMING TRUNK IS LOCATED.
3. BY-LINK TRUNKS SHALL NOT BE ASSIGNED TO HORIZONTAL GROUPS OF MORE THAN 20 TRUNKS

INCOMING REGISTER

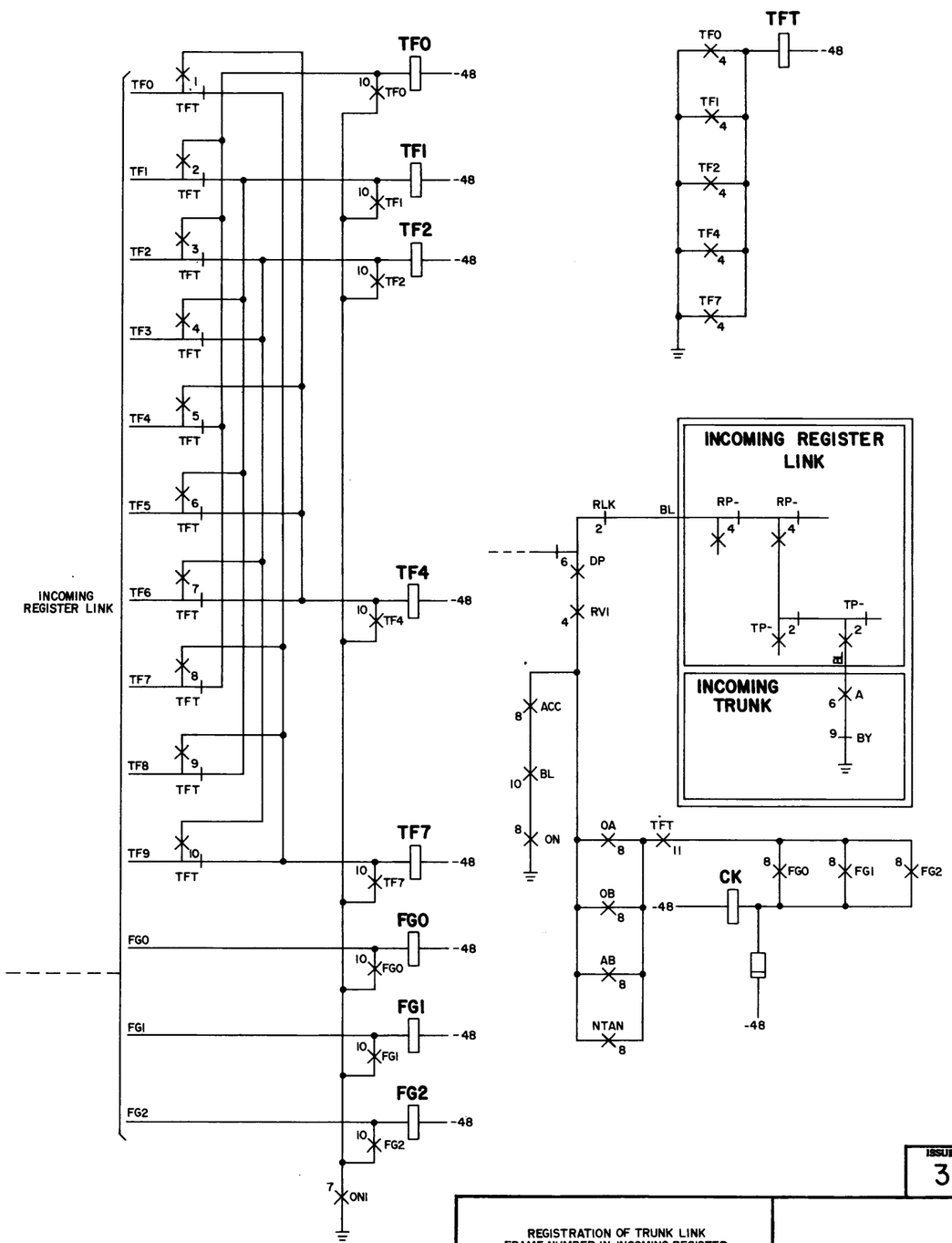

ISSUE 3

REGISTRATION OF TRUNK LINK FRAME NUMBER IN INCOMING REGISTER (DP)

SFD-10-01-D123

BELL TELEPHONE LABORATORIES INCORPORATED

6S

PRINTED IN U.S.A.

SFD-10-01-D123

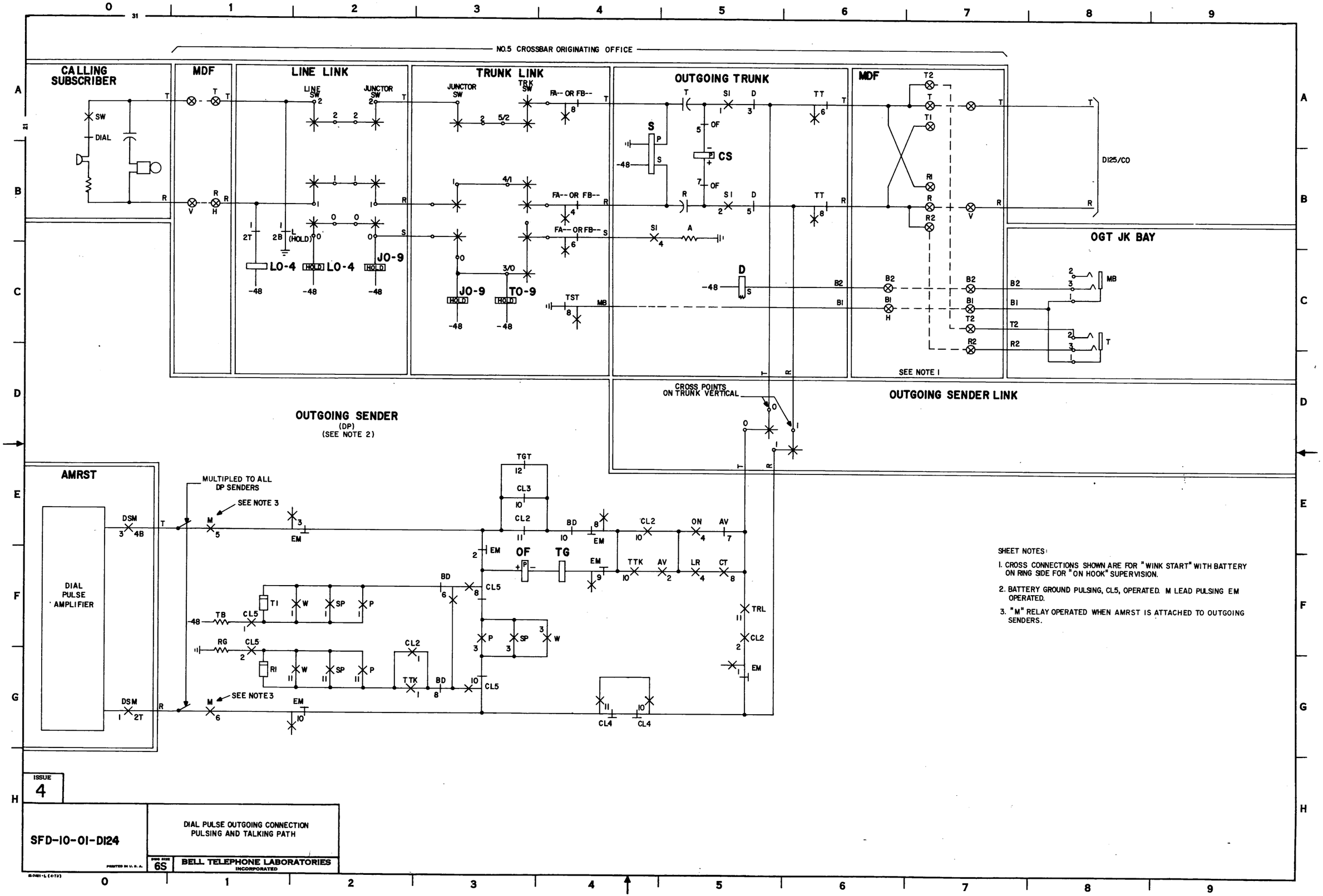
NO.5 CROSSBAR ORIGINATING OFFICE
CALLING SUBSCRIBER
SW
DIAL
MDF
LINE LINK
LINE SW
JUNCTOR SW
TRUNK LINK
TRK SW
FA-- OR FB--
OUTGOING TRUNK
S
CS
D
A
TST
MB
LO-4
JO-9
TO-9
HOLD
MDF
D125/CO
OGT JK BAY
SEE NOTE 1
CROSS POINTS ON TRUNK VERTICAL
OUTGOING SENDER LINK
OUTGOING SENDER
(DP)
(SEE NOTE 2)
AMRST
DIAL PULSE AMPLIFIER
MULTIPLED TO ALL DP SENDERS
SEE NOTE 3
TGT
CL3
CL2
OF
TG
CL5
CL4
TRL
TI
RI
TB
RG
TTK
SHEET NOTES:
1. CROSS CONNECTIONS SHOWN ARE FOR "WINK START" WITH BATTERY ON RING SIDE FOR "ON HOOK" SUPERVISION.
2. BATTERY GROUND PULSING, CL5, OPERATED. M LEAD PULSING EM OPERATED.
3. "M" RELAY OPERATED WHEN AMRST IS ATTACHED TO OUTGOING SENDERS.
ISSUE 4
SFD-10-01-D124
DIAL PULSE OUTGOING CONNECTION PULSING AND TALKING PATH
BELL TELEPHONE LABORATORIES INCORPORATED
6S
SFD-10-01-D124

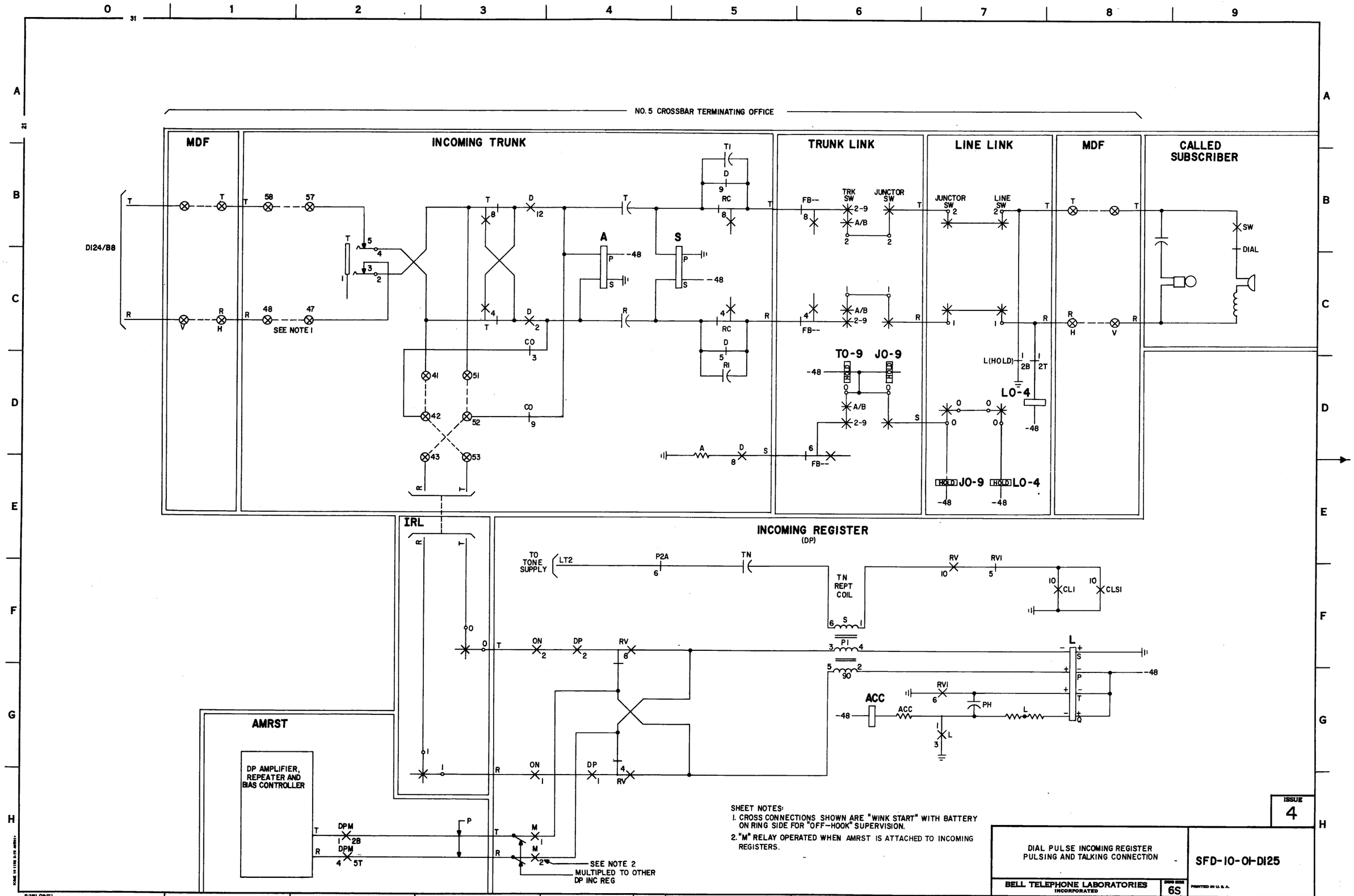

SFD-10-01-D125

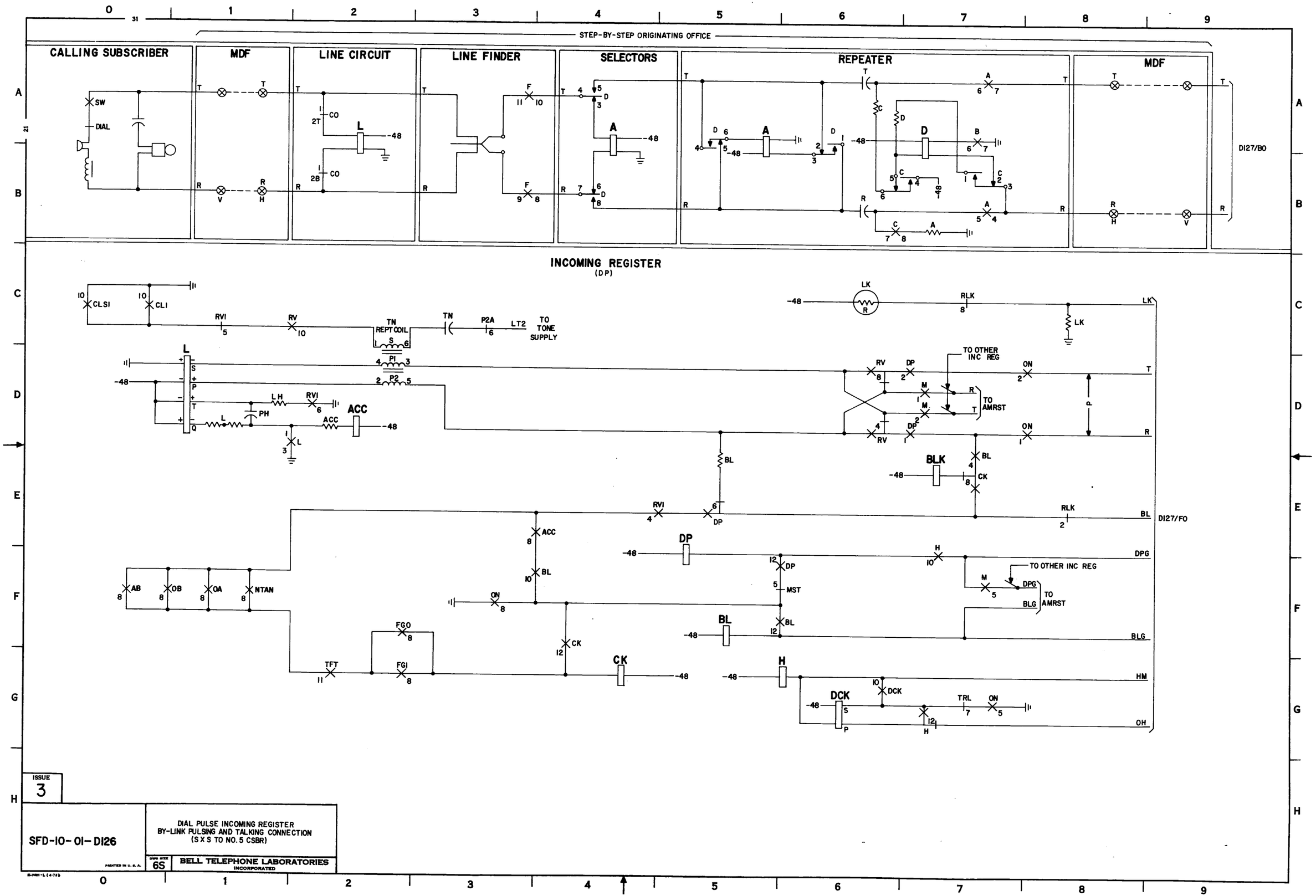

ISSUE 3

SFD-10-01-D126

DIAL PULSE INCOMING REGISTER
BY-LINK PULSING AND TALKING CONNECTION
(S X S TO NO. 5 CSBR)

DWN SIZE 6S

BELL TELEPHONE LABORATORIES INCORPORATED

PRINTED IN U. S. A.

SFD-10-01-D126

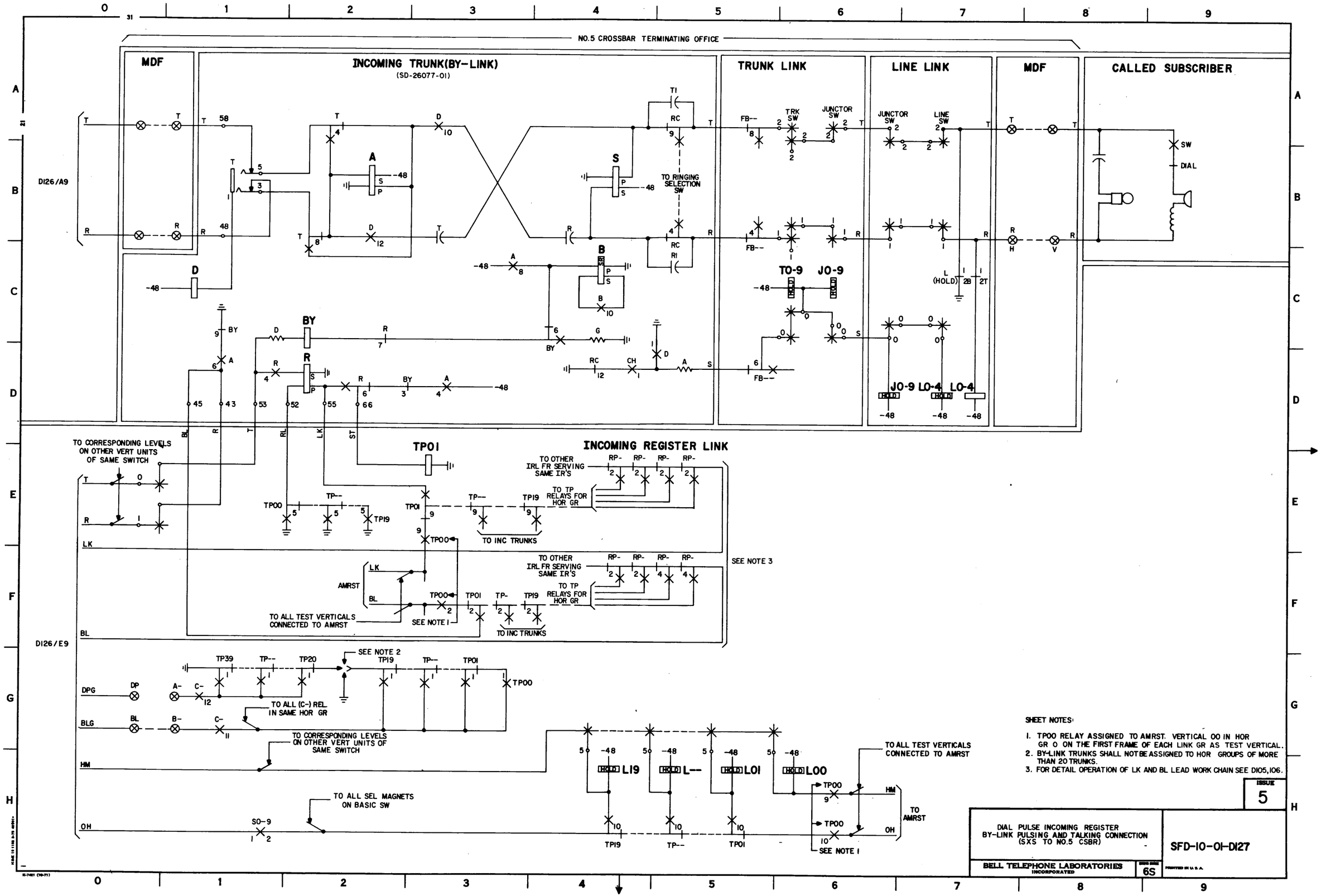

SHEET NOTES:

1. TP00 RELAY ASSIGNED TO AMRST. VERTICAL 00 IN HOR GR 0 ON THE FIRST FRAME OF EACH LINK GR AS TEST VERTICAL.
2. BY-LINK TRUNKS SHALL NOT BE ASSIGNED TO HOR GROUPS OF MORE THAN 20 TRUNKS.
3. FOR DETAIL OPERATION OF LK AND BL LEAD WORK CHAIN SEE D105,106.

ISSUE 5

DIAL PULSE INCOMING REGISTER
BY-LINK PULSING AND TALKING CONNECTION
(SXS TO NO.5 CSBR)

SFD-10-01-D127

BELL TELEPHONE LABORATORIES INCORPORATED

6S

PRINTED IN U.S.A.

INCOMING REGISTER
(DP)

PULSE COUNTING

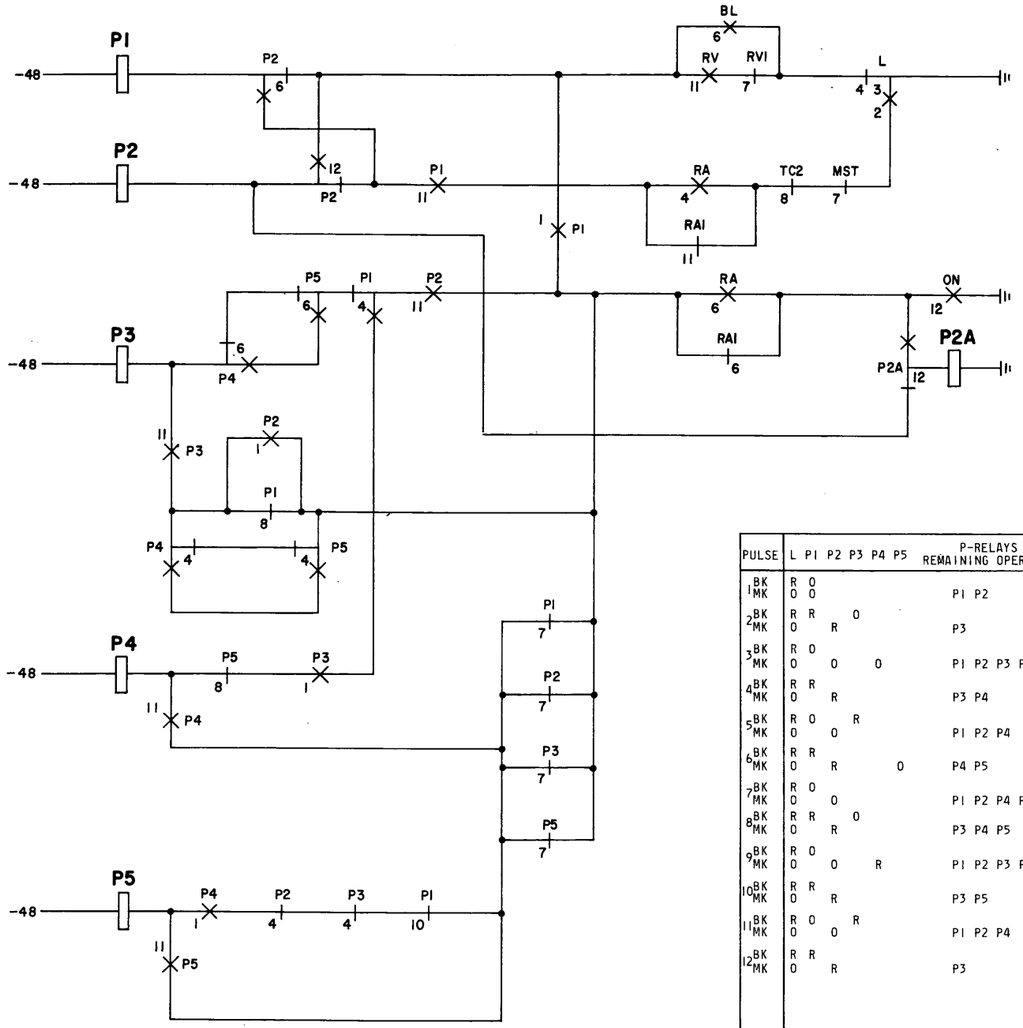

PULSE TRANSLATION

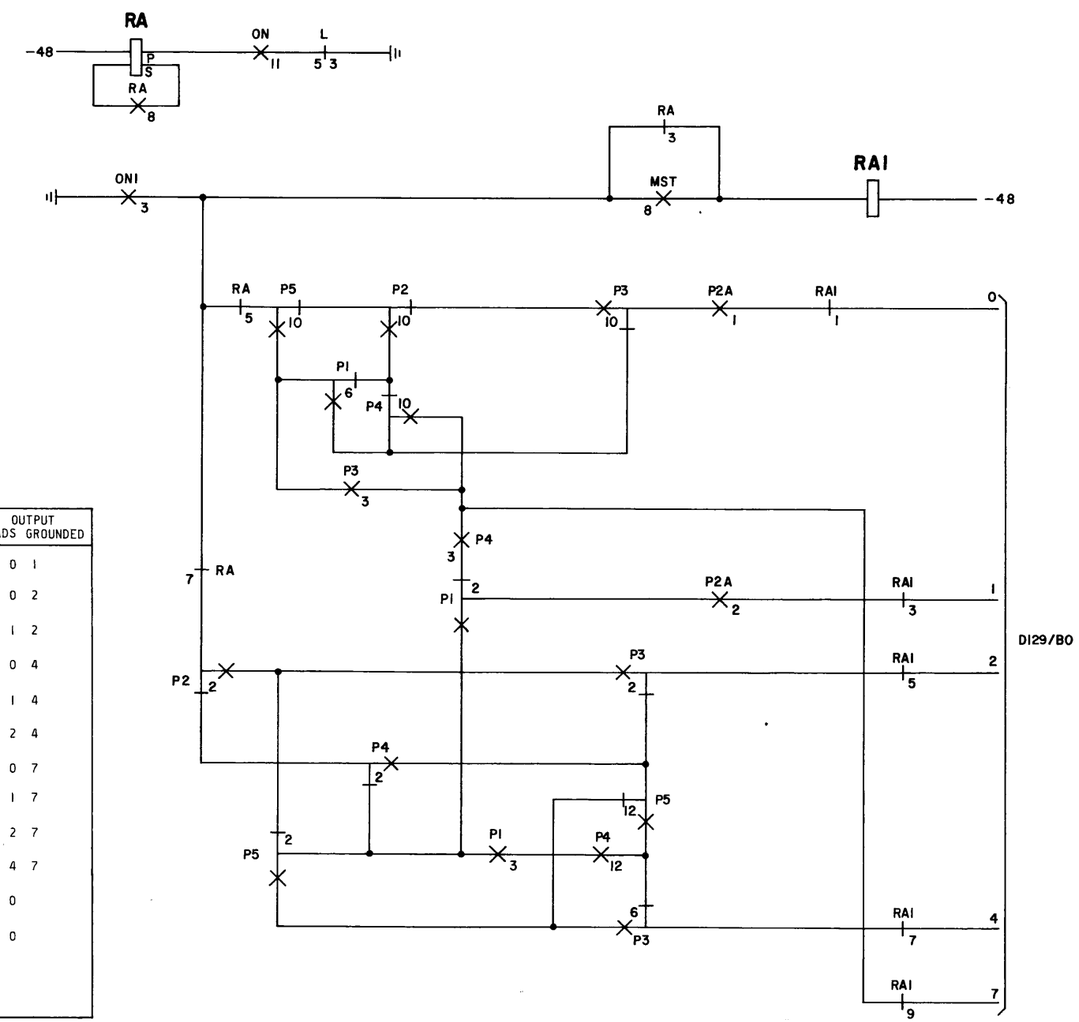

PULSE	L	P1	P2	P3	P4	P5	P-RELAYS REMAINING OPERATED	OUTPUT LEADS GROUNDED
1 BK	R	O						
MK	O	O					P1 P2	0 1
2 BK	R	R		O				
MK	O		R				P3	0 2
3 BK	R	O						
MK	O		O		O		P1 P2 P3 P4	1 2
4 BK	R	R						
MK	O		R				P3 P4	0 4
5 BK	R	O			R			
MK	O		O				P1 P2 P4	1 4
6 BK	R	R						
MK	O		R			O	P4 P5	2 4
7 BK	R	O						
MK	O		O				P1 P2 P4 P5	0 7
8 BK	R	R		O				
MK	O		R				P3 P4 P5	1 7
9 BK	R	O						
MK	O		O		R		P1 P2 P3 P5	2 7
10 BK	R	R						
MK	O		R				P3 P5	4 7
11 BK	R	O			R			
MK	O		O				P1 P2 P4	0
12 BK	R	R						
MK	O		R				P3	0

ISSUE 3

SFD-10-01-D128

DP INCOMING REGISTER
PULSE COUNTING & TRANSLATION

DWG SIZE 6S

BELL TELEPHONE LABORATORIES
INCORPORATED

PRINTED IN U. S. A.

E-2481-L (4-73)

SFD-10-01-D128

INCOMING REGISTER
(DP)

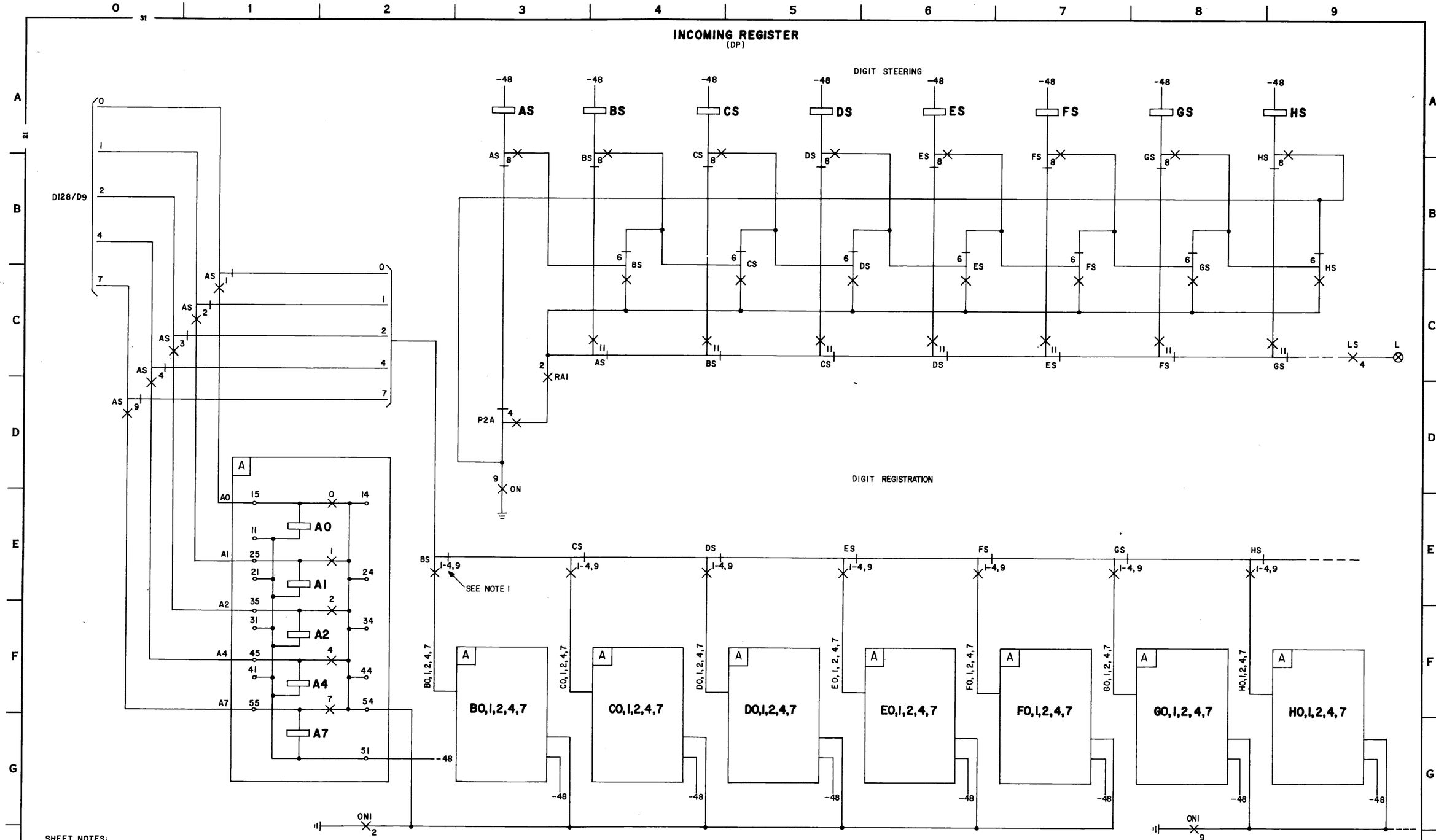

SHEET NOTES:

1. CONTACTS 1, 2, 3, 4, 9 CORRESPOND TO LEADS 0, 1, 2, 4, 7 RESPECTIVELY.

ISSUE 3

DP INCOMING REGISTER
DIGIT STEERING AND REGISTRATION

SFD-10-01-D129

BELL TELEPHONE LABORATORIES
INCORPORATED

DWG SIZE 6S

PRINTED IN U.S.A.

SFD-10-01-D129

INCOMING REGISTER
(DP)

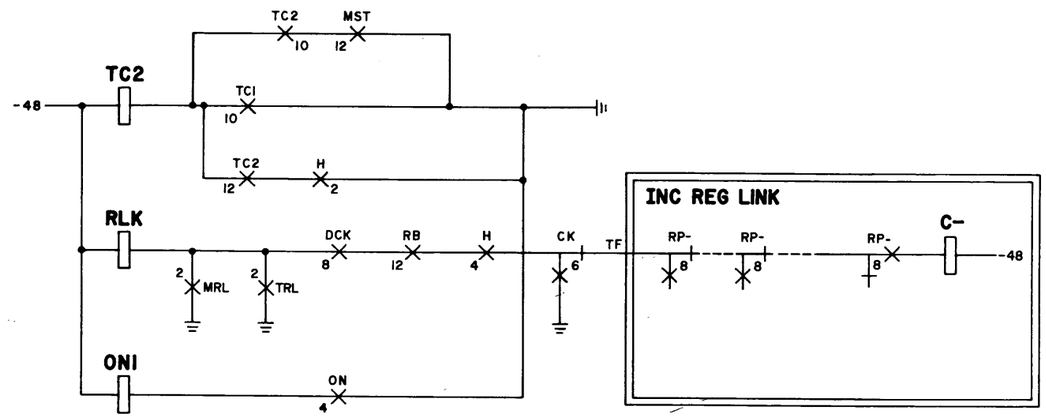

LINK RELEASE TIMER 330-650 ms

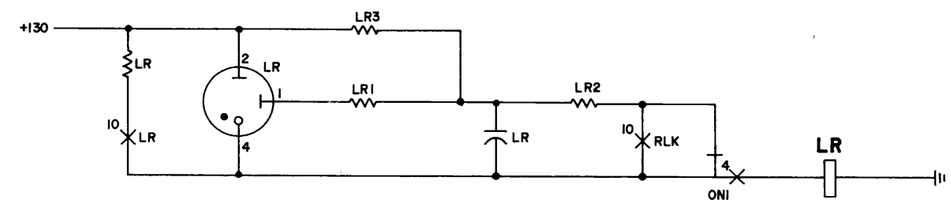

START DIAL REVERSAL 140-300 ms

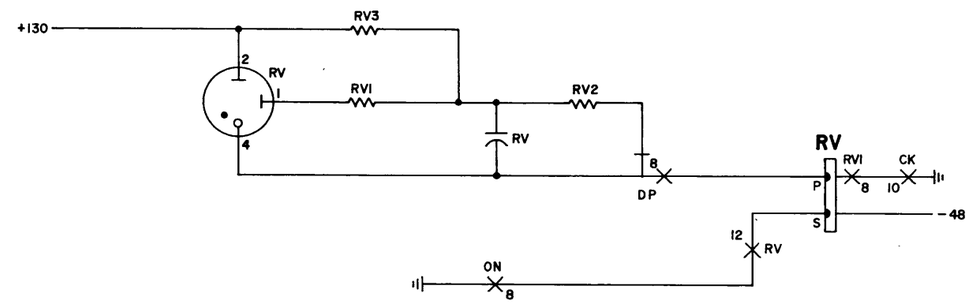

ABANDON CALL TIMER 140-300 ms

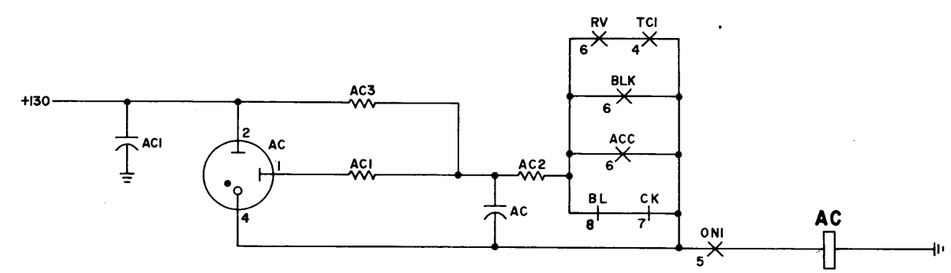

OVERALL TIMER 19.6 - 37.0 SEC

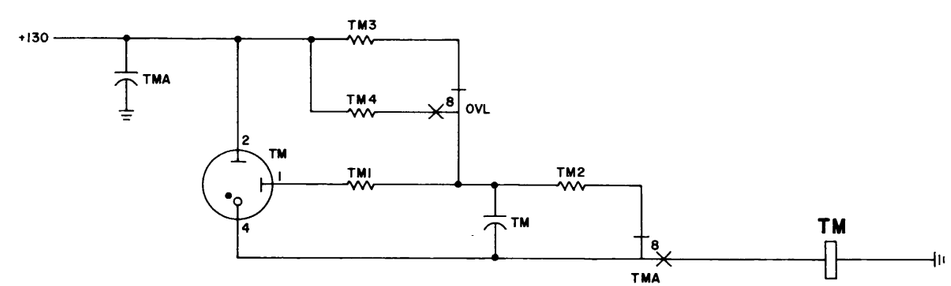

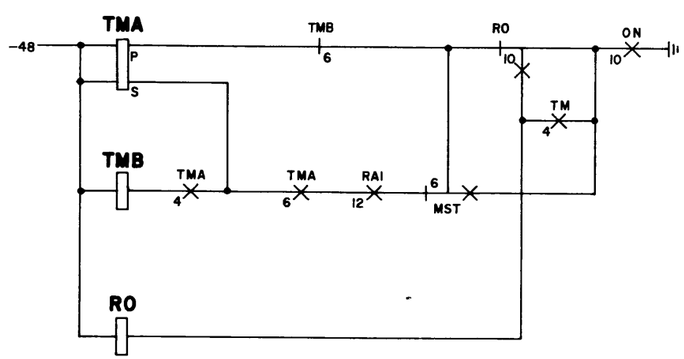

ISSUE 5

SFD-10-01-D130

DIAL PULSE INCOMING REGISTER
DISCONNECT AND TIMING
CIRCUITS

DWG SIZE 6S

BELL TELEPHONE LABORATORIES
INCORPORATED

PRINTED IN U. S. A.

E-74811-L (4-72)

SFD-10-01-D130

INCOMING REGISTER
(DP)

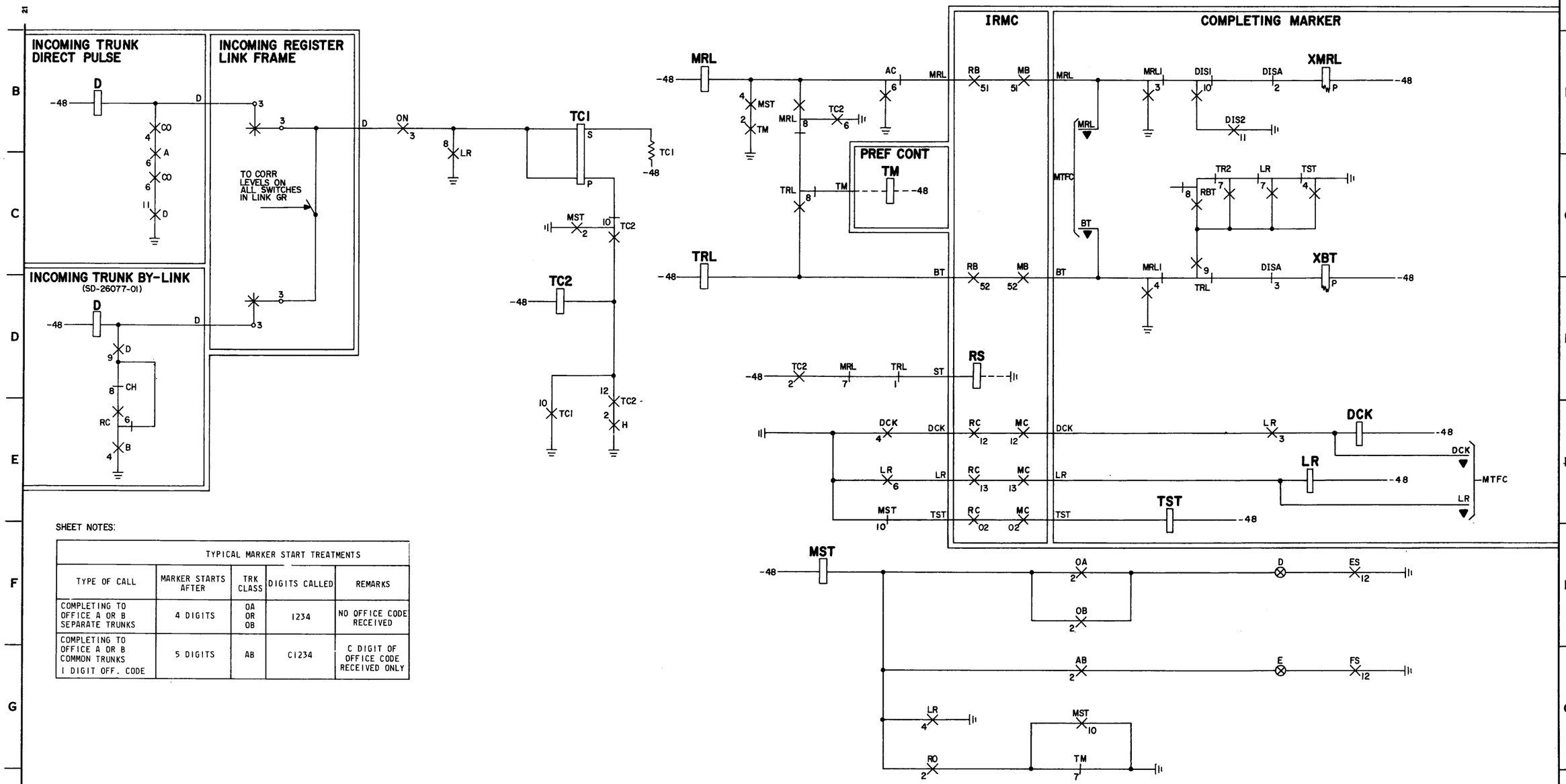

SHEET NOTES:

TYPICAL MARKER START TREATMENTS				
TYPE OF CALL	MARKER STARTS AFTER	TRK CLASS	DIGITS CALLED	REMARKS
COMPLETING TO OFFICE A OR B SEPARATE TRUNKS	4 DIGITS	OA OR OB	1234	NO OFFICE CODE RECEIVED
COMPLETING TO OFFICE A OR B COMMON TRUNKS 1 DIGIT OFF. CODE	5 DIGITS	AB	C1234	C DIGIT OF OFFICE CODE RECEIVED ONLY

SFD-10-01-D131

ISSUE 4

DIAL PULSE INCOMING REGISTER MARKER START AND RELEASE

SFD-10-01-D131

BELL TELEPHONE LABORATORIES INCORPORATED

6S

PRINTED IN U.S.A.

INCOMING REGISTER MARKER CONNECTOR-A

(ALL REFERENCES ARE TO INCOMING REGISTERS AND PC ASSOCIATED WITH THIS CONNECTOR)

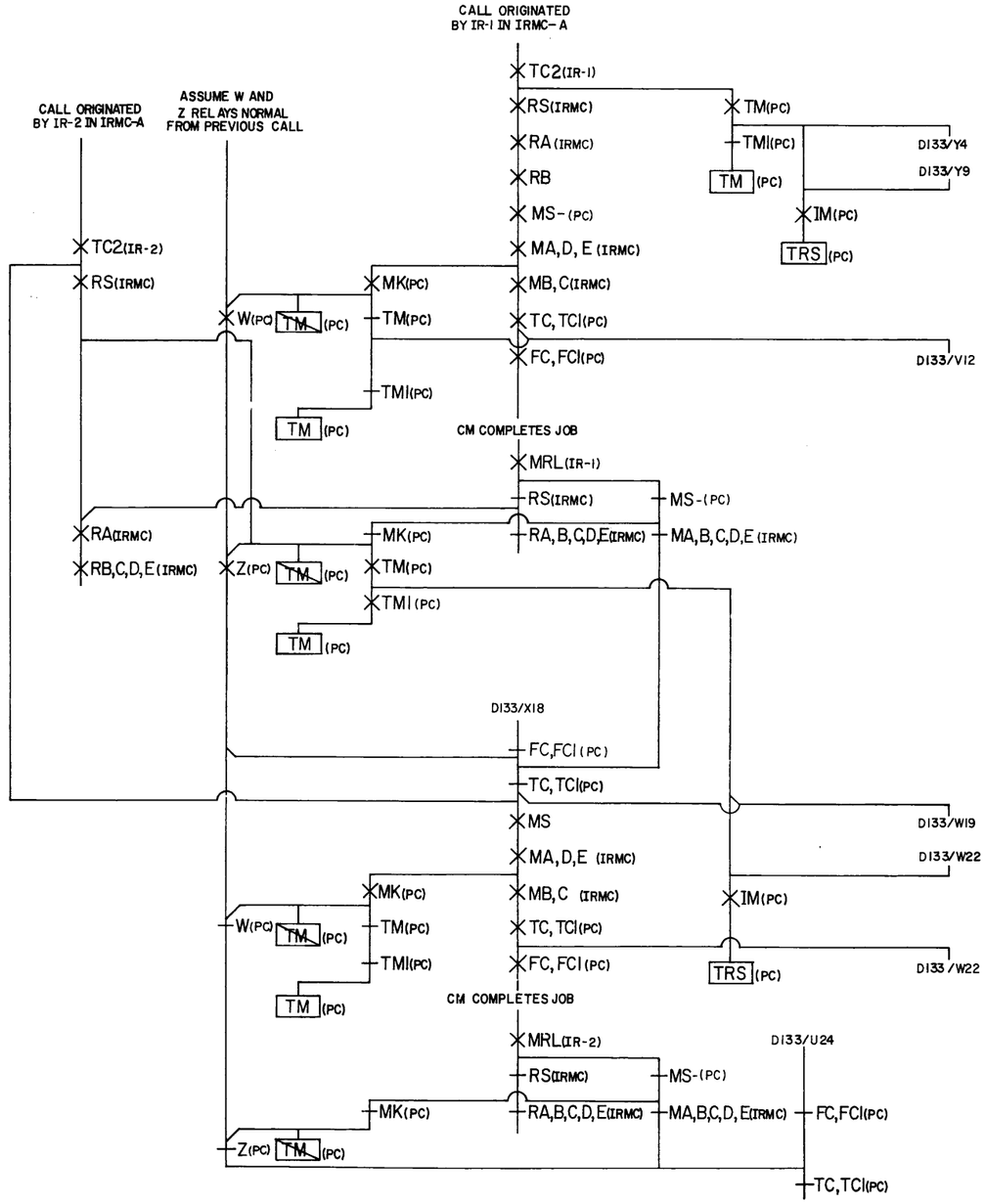

INCOMING REGISTER MARKER CONNECTOR-B

(ALL REFERENCES ARE TO INCOMING REGISTERS AND PC ASSOCIATED WITH THIS CONNECTOR)

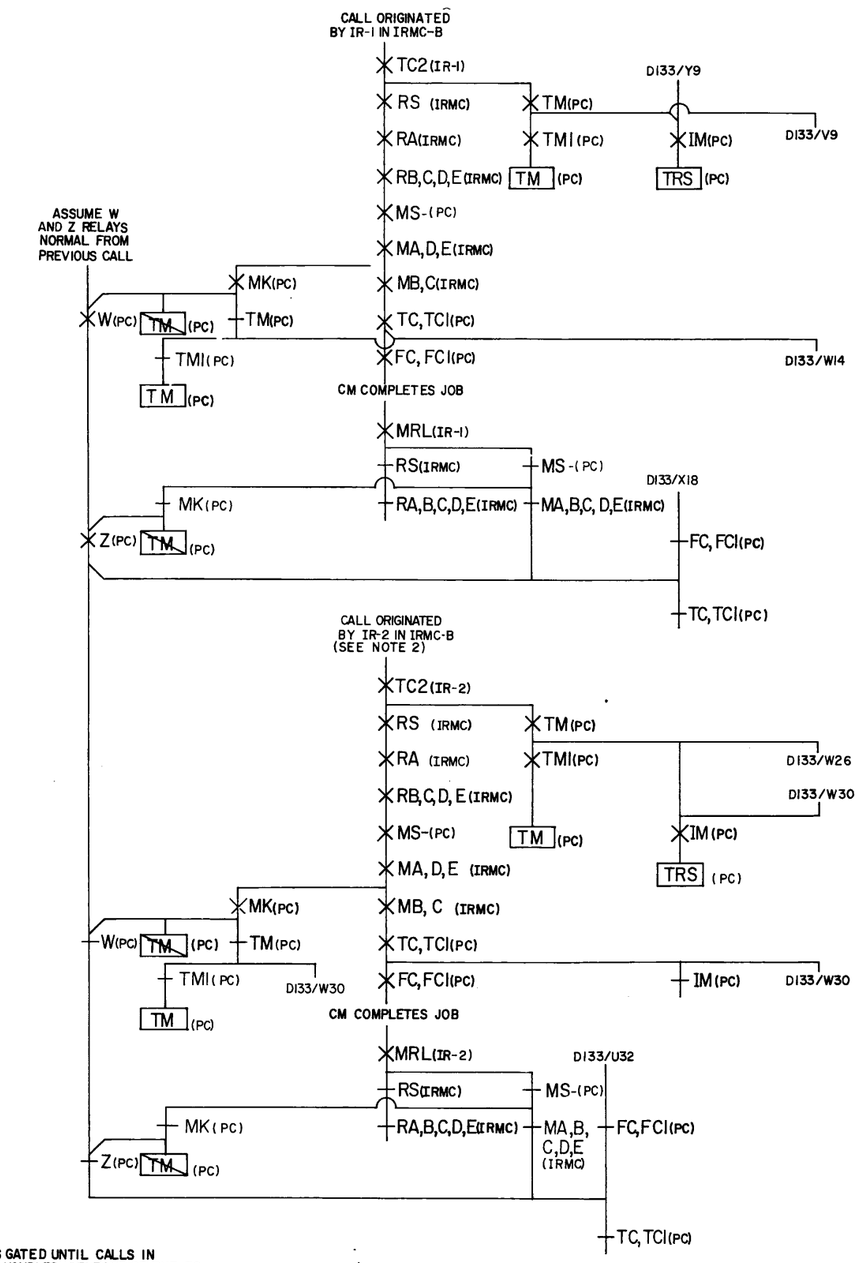

SHEET NOTES:

1. THE CALL FROM (IR-2) IN (IRMC-A) IS GATED UNTIL CALLS IN CONNECTORS B AND C HAVE BEEN HANDLED. RELEASE OF THE FC, FCI RELAYS IN THE (PC) BY THE (MTRC) UNGATES (IRMC-A).
2. (IRMC-B) WAS UNGATED (FC, FCI RELAYS RELEASE BY MTRC) BEFORE A SECOND CALL WAS ORIGINATING.

ISSUE 4

SFD-10-01-D132

SEQUENCE CHART
MASTER TRAFFIC CONTROL

PRINTED IN U. S. A.

DWG SIZE 6S

BELL TELEPHONE LABORATORIES INCORPORATED

CBL-267(10-75)

SFD-10-01-D132

INCOMING REGISTER MARKER CONNECTOR-C

(ALL REFERENCES ARE TO INCOMING REGISTERS AND PC ASSOCIATED WITH THIS CONNECTOR)

MASTER TRAFFIC CONTROL

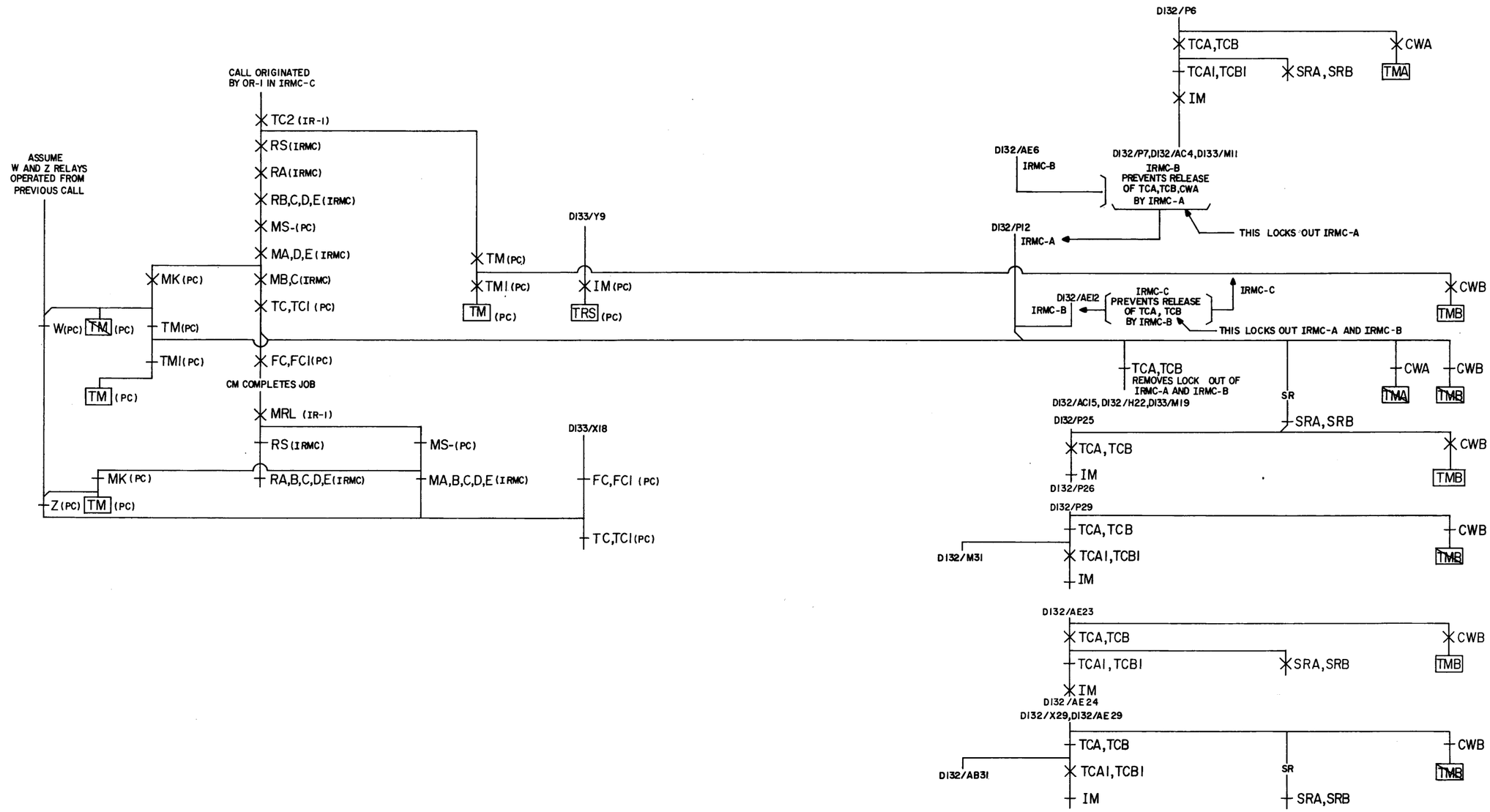

ISSUE 4

SEQUENCE CHART
MASTER TRAFFIC CONTROL

SFD-10-01-D133

BELL TELEPHONE LABORATORIES INCORPORATED

6S

SFD-10-01-D133

BRUNING 44-131 24092

E-7421-B (10-71)

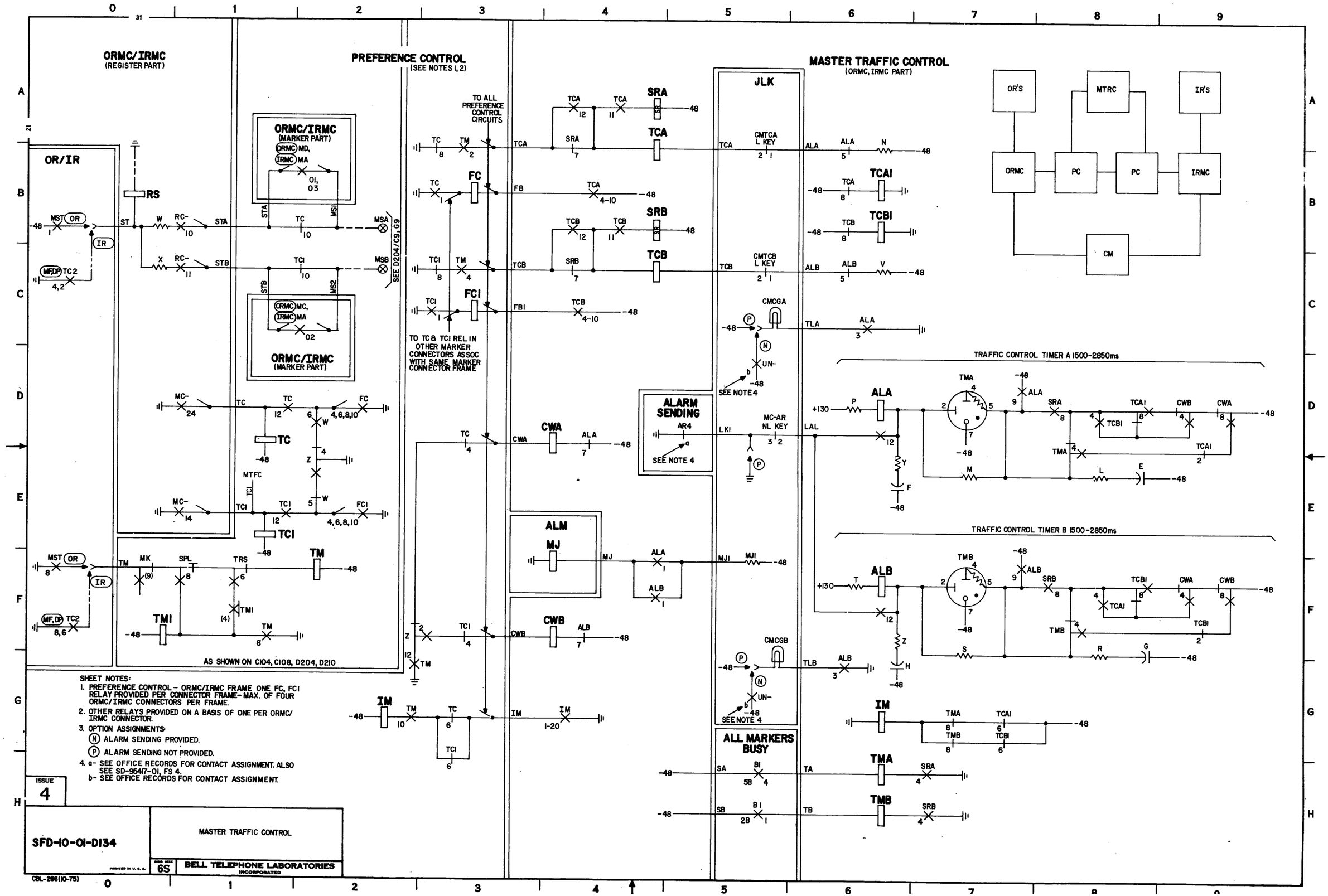
ORMC/IRMC
(REGISTER PART)
PREFERENCE CONTROL
(SEE NOTES 1, 2)
MASTER TRAFFIC CONTROL
(ORMC, IRMC PART)
OR/IR
ORMC/IRMC
(MARKER PART)
ORMC/IRMC
(MARKER PART)
TO ALL PREFERENCE CONTROL CIRCUITS
TO TC & TCI REL IN OTHER MARKER CONNECTORS ASSOC WITH SAME MARKER CONNECTOR FRAME
SEE D204/C9, G9
JLK
ALARM SENDING
SEE NOTE 4
ALM
ALL MARKERS BUSY
TRAFFIC CONTROL TIMER A 1500-2850ms
TRAFFIC CONTROL TIMER B 1500-2850ms
OR'S
MTRC
IR'S
ORMC
PC
PC
IRMC
CM
AS SHOWN ON C104, C108, D204, D210
SHEET NOTES:
1. PREFERENCE CONTROL - ORMC/IRMC FRAME ONE FC, FCI RELAY PROVIDED PER CONNECTOR FRAME - MAX. OF FOUR ORMC/IRMC CONNECTORS PER FRAME.
2. OTHER RELAYS PROVIDED ON A BASIS OF ONE PER ORMC/IRMC CONNECTOR.
3. OPTION ASSIGNMENTS:
(N) ALARM SENDING PROVIDED.
(P) ALARM SENDING NOT PROVIDED.
4. a- SEE OFFICE RECORDS FOR CONTACT ASSIGNMENT. ALSO SEE SD-95417-01, FS 4.
b- SEE OFFICE RECORDS FOR CONTACT ASSIGNMENT.
ISSUE 4
SFD-10-01-D134
MASTER TRAFFIC CONTROL
BELL TELEPHONE LABORATORIES INCORPORATED
6S
CBL-296(10-75)
SFD-10-01-D134

ESTABLISHING INCOMING TRUNK CONNECTION

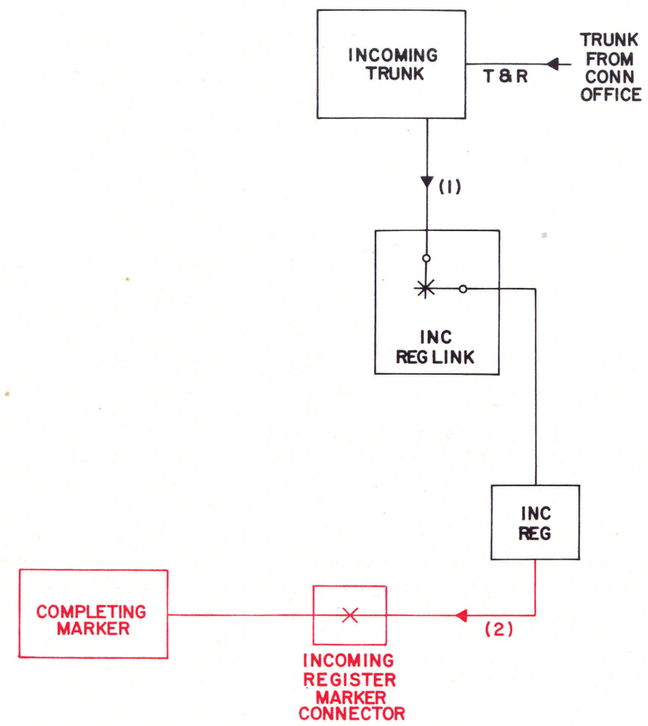

CAUTION!

DUE TO THE SIMPLIFIED NATURE OF THIS DOCUMENT INFORMATION SHOWN MAY NOT BE COMPLETE.

INDEX

ISSUE 3

PART D2
CONNECTION TO COMPLETING MARKER

SFD-10-01-D201

BELL TELEPHONE LABORATORIES INCORPORATED

DWG SIZE 6S

PRINTED IN U.S.A.

SFD-10-01-D201
2 SHEETS, SH 1

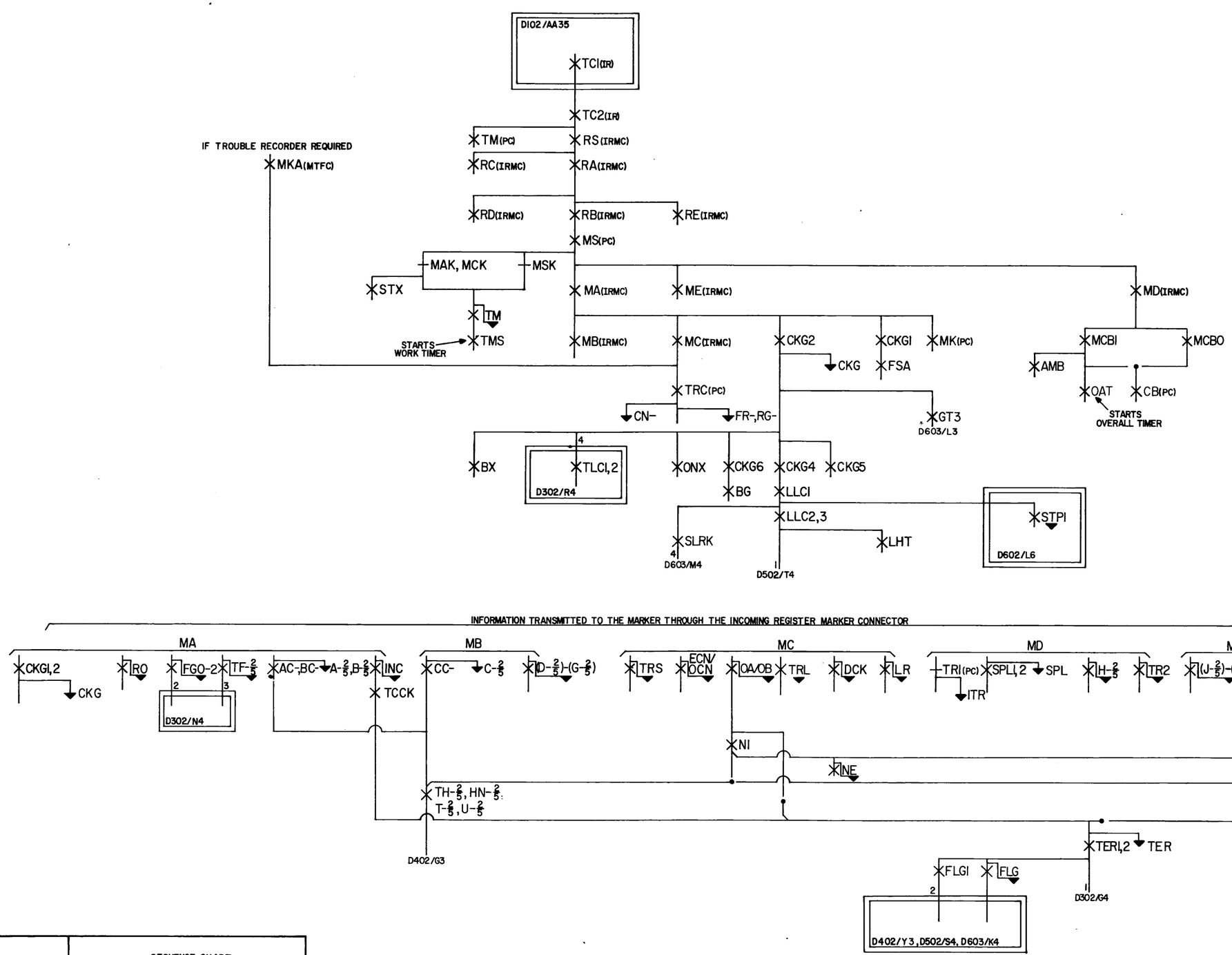

ISSUE 4

SFD-10-01-D202

SEQUENCE CHART
COMPLETING MARKER SEIZURE
BY INCOMING REGISTER

PAPER SIZE 6S

BELL TELEPHONE LABORATORIES
INCORPORATED

PRINTED IN U.S.A.

SFD-10-01-D202

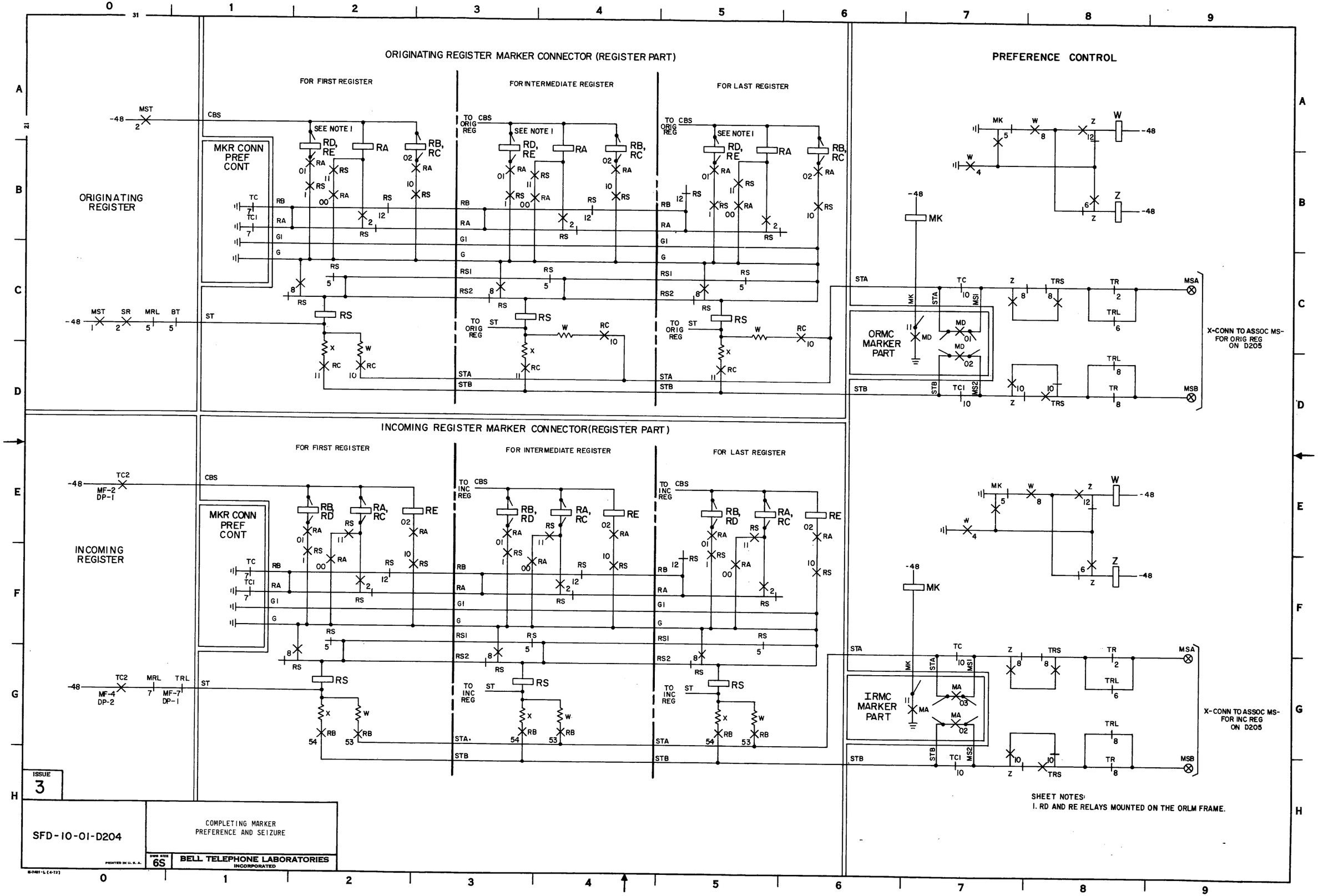
ORIGINATING REGISTER MARKER CONNECTOR (REGISTER PART)
FOR FIRST REGISTER
FOR INTERMEDIATE REGISTER
FOR LAST REGISTER
ORIGINATING REGISTER
MKR CONN PREF CONT
SEE NOTE 1
RD, RE
RA
RB, RC
RS
TO ORIG REG
PREFERENCE CONTROL
ORMC MARKER PART
X-CONN TO ASSOC MS- FOR ORIG REG ON D205
INCOMING REGISTER MARKER CONNECTOR(REGISTER PART)
INCOMING REGISTER
RB, RD
RA, RC
RE
TO INC REG
IRMC MARKER PART
X-CONN TO ASSOC MS- FOR INC REG ON D205
SHEET NOTES:
1. RD AND RE RELAYS MOUNTED ON THE ORLM FRAME.
ISSUE 3
SFD-10-01-D204
COMPLETING MARKER PREFERENCE AND SEIZURE
DWG SIZE 6S
BELL TELEPHONE LABORATORIES INCORPORATED
PRINTED IN U. S. A.
SFD-10-01-D204

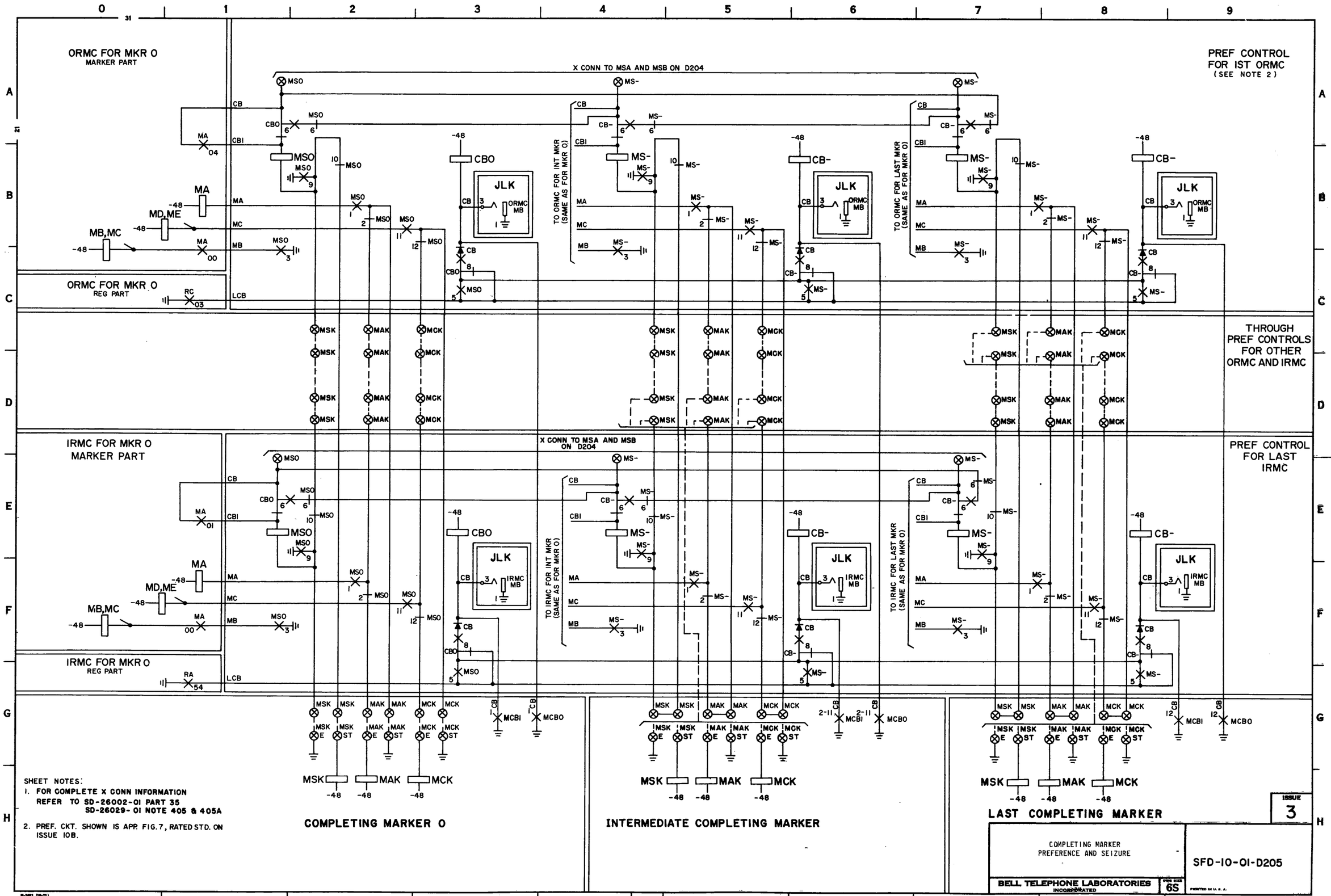

SFD-10-01-D205

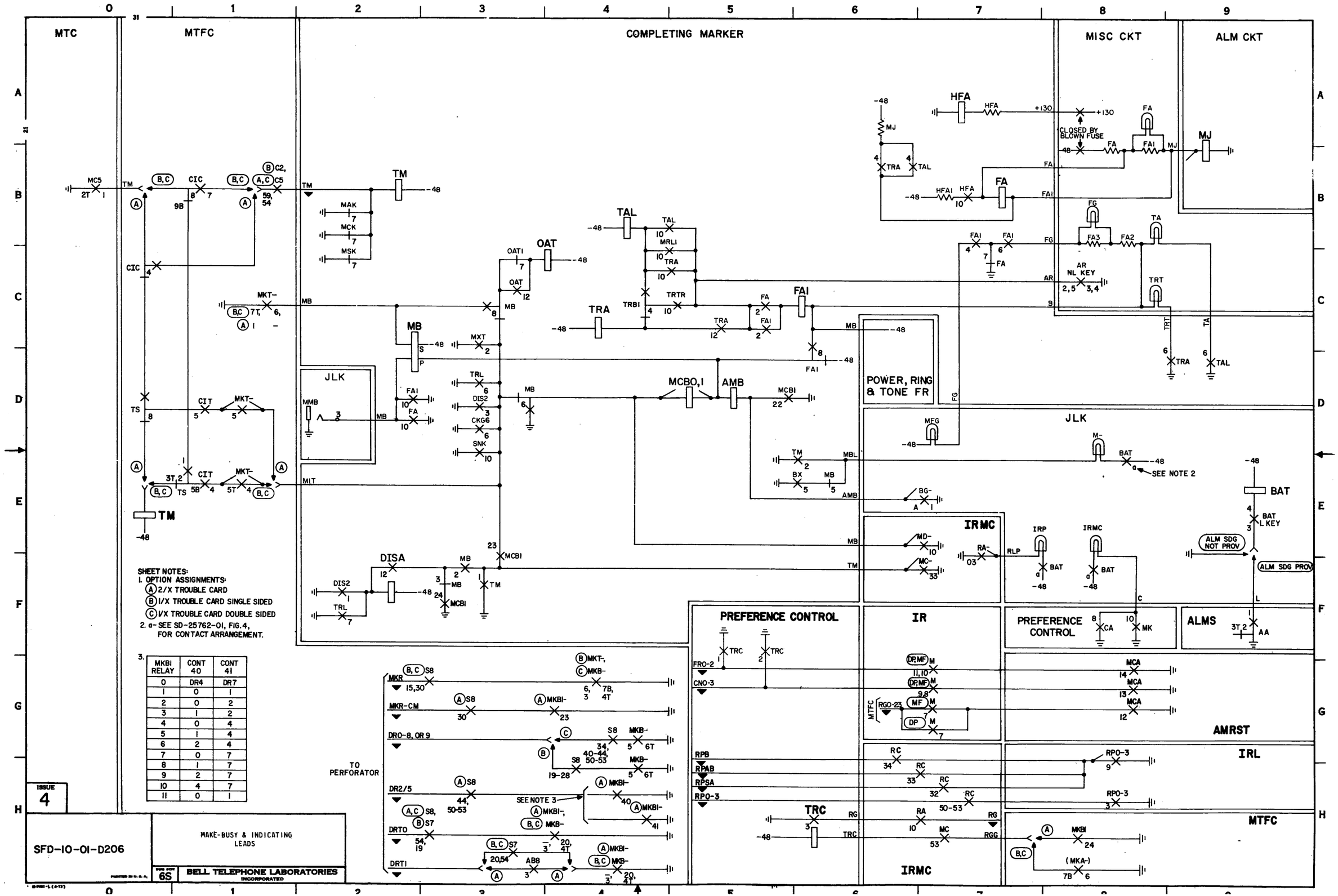

MKBI RELAY	CONT 40	CONT 41
0	DR4	DR7
1	0	1
2	0	2
3	1	2
4	0	4
5	1	4
6	2	4
7	0	7
8	1	7
9	2	7
10	4	7
11	0	1

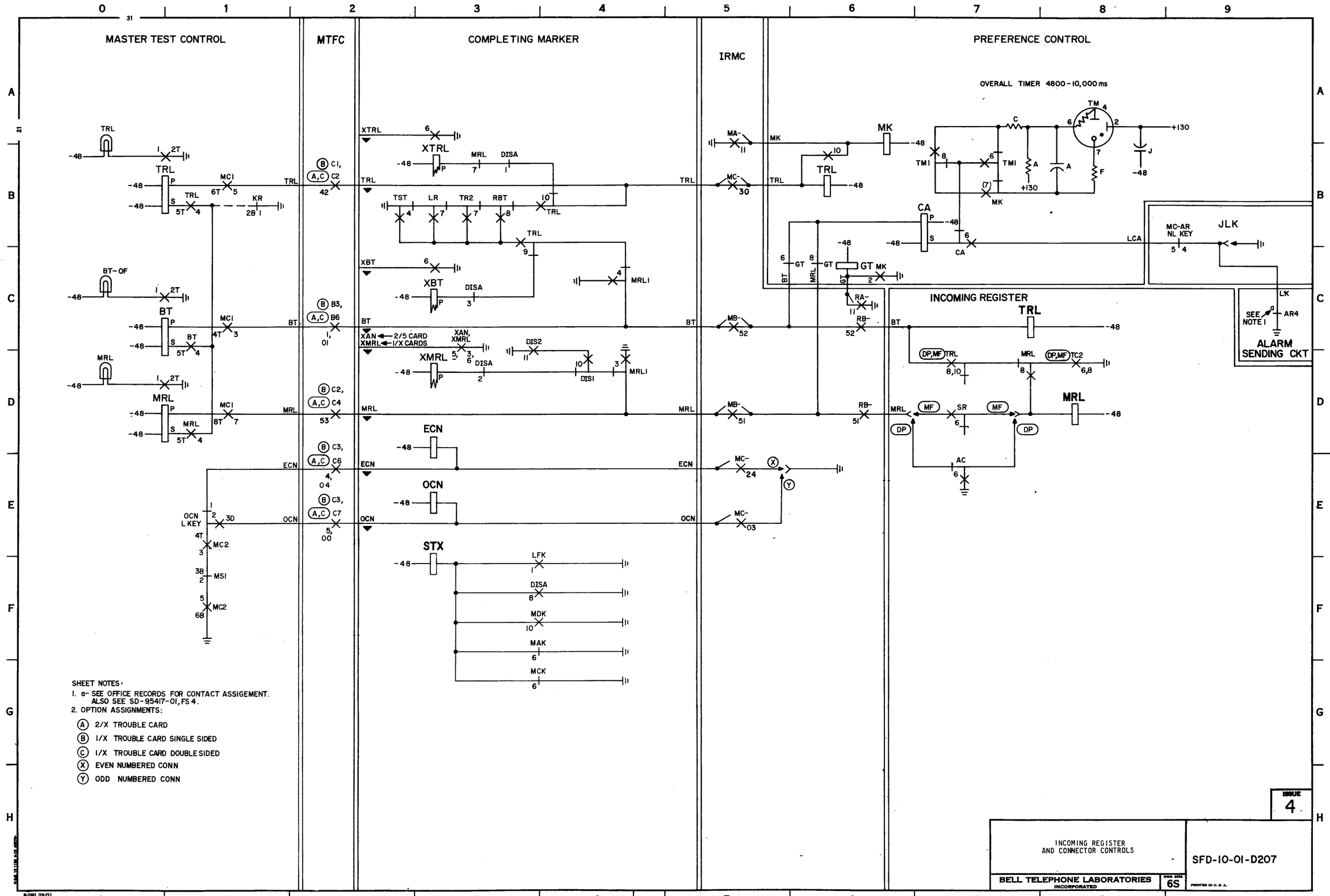

SFD-10-01-D207

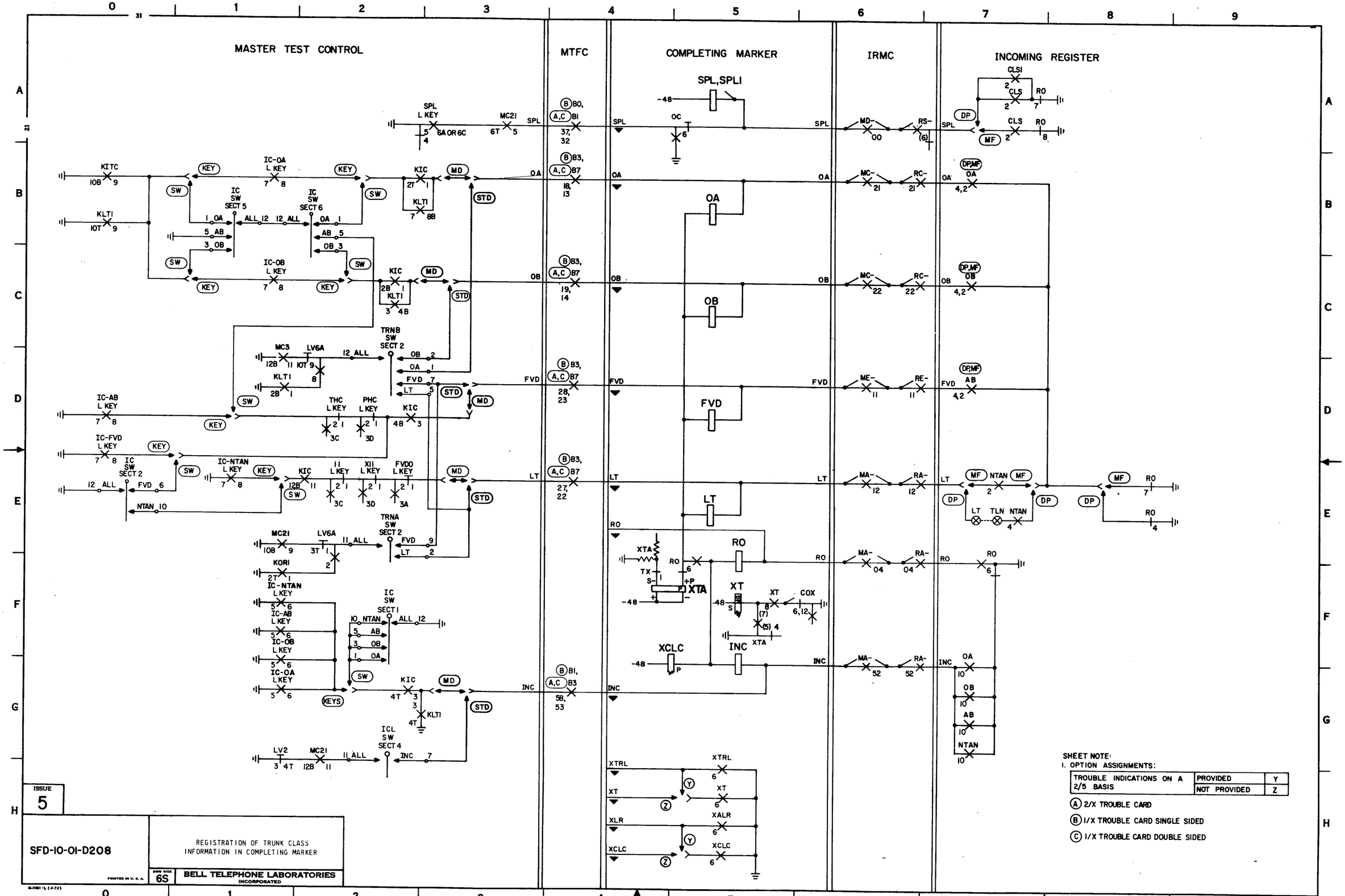

SFD-10-01-D208

COMPLETING MARKER

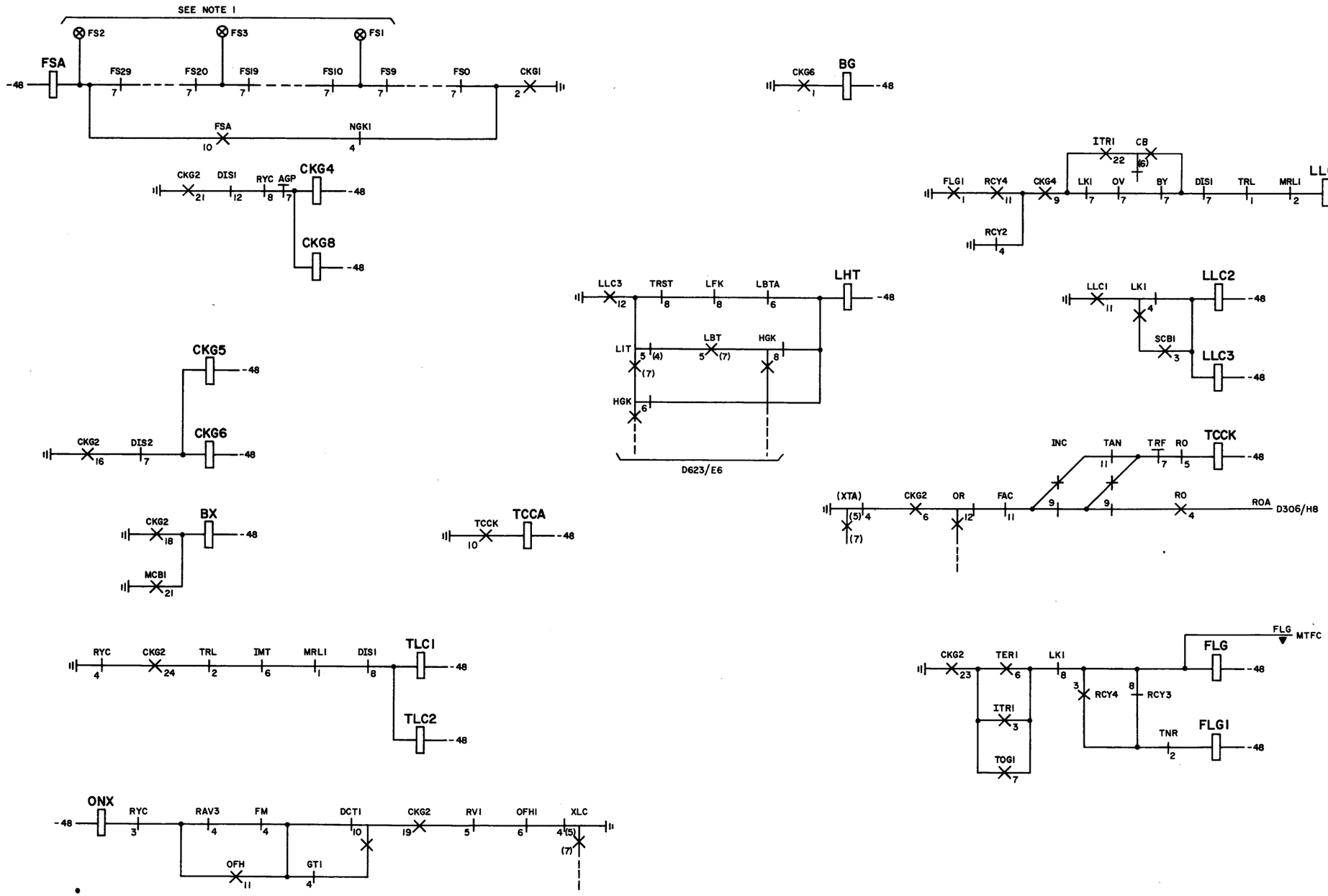

SHEET NOTES:

1.

SIZE	CONN	TO
MAX OF 10 TL	FS1	FS2
MAX OF 20 TL	FS3	FS2
OVER 20 TL	NONE	

ISSUE 3

COMPLETING MARKER
MISCELLANEOUS CONTROL RELAYS

SFD-10-01-D209

BELL TELEPHONE LABORATORIES INCORPORATED

DWG SIZE 6S

PRINTED IN U.S.A.

SFD-10-01-D209

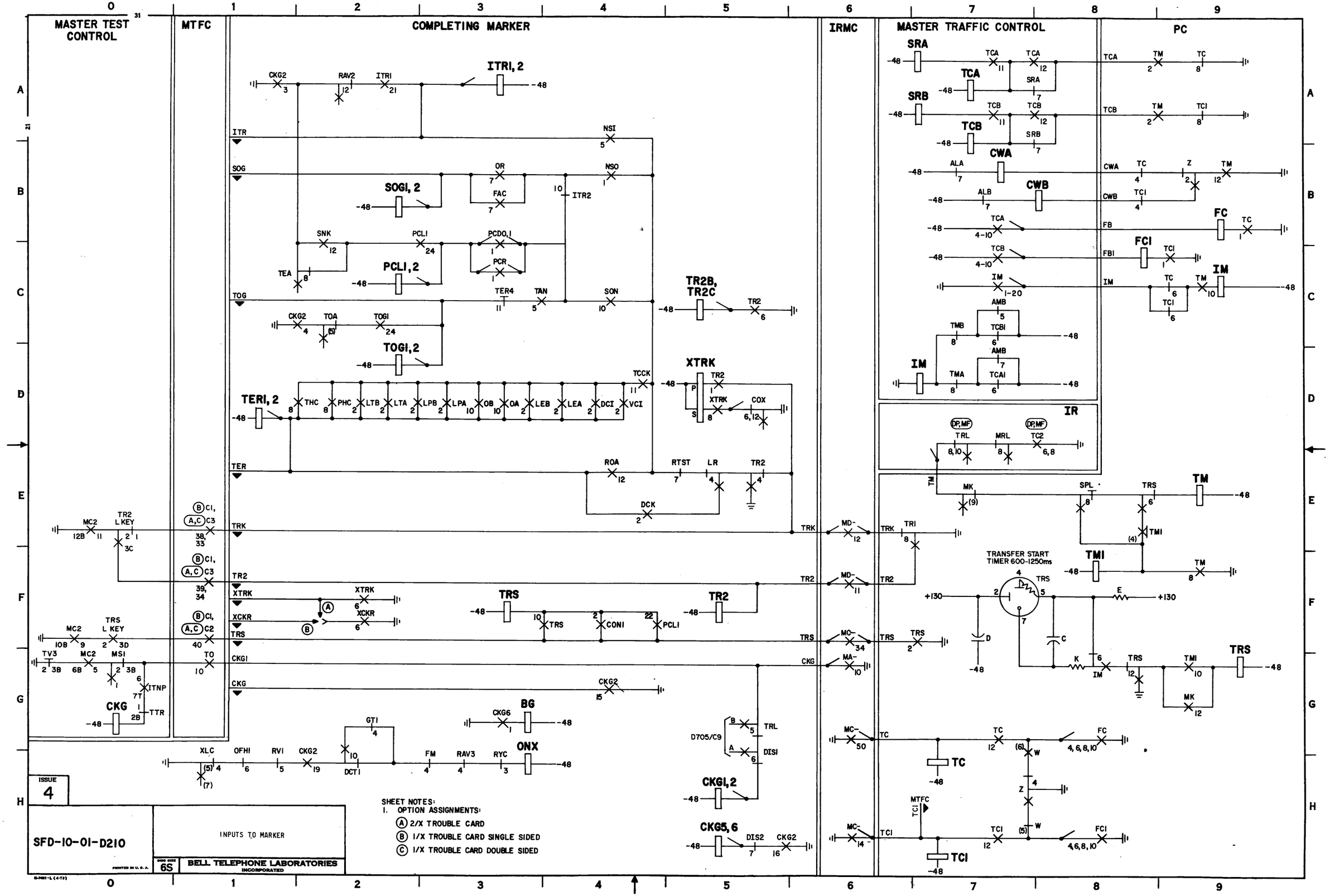
MASTER TEST CONTROL
MTFC
COMPLETING MARKER
IRMC
MASTER TRAFFIC CONTROL
PC
IR
ITRI, 2
SOGI, 2
PCLI, 2
TOGI, 2
TERI, 2
TR2B, TR2C
XTRK
CKG
BG
ONX
CKGI, 2
CKG5, 6
TRS
TR2
TC
TCI
TM
TMI
FC
FCI
IM
TRANSFER START TIMER 600-1250ms
D705/C9
SHEET NOTES:
1. OPTION ASSIGNMENTS:
(A) 2/X TROUBLE CARD
(B) 1/X TROUBLE CARD SINGLE SIDED
(C) 1/X TROUBLE CARD DOUBLE SIDED
ISSUE 4
SFD-10-01-D210
INPUTS TO MARKER
BELL TELEPHONE LABORATORIES INCORPORATED
6S
SFD-10-01-D210

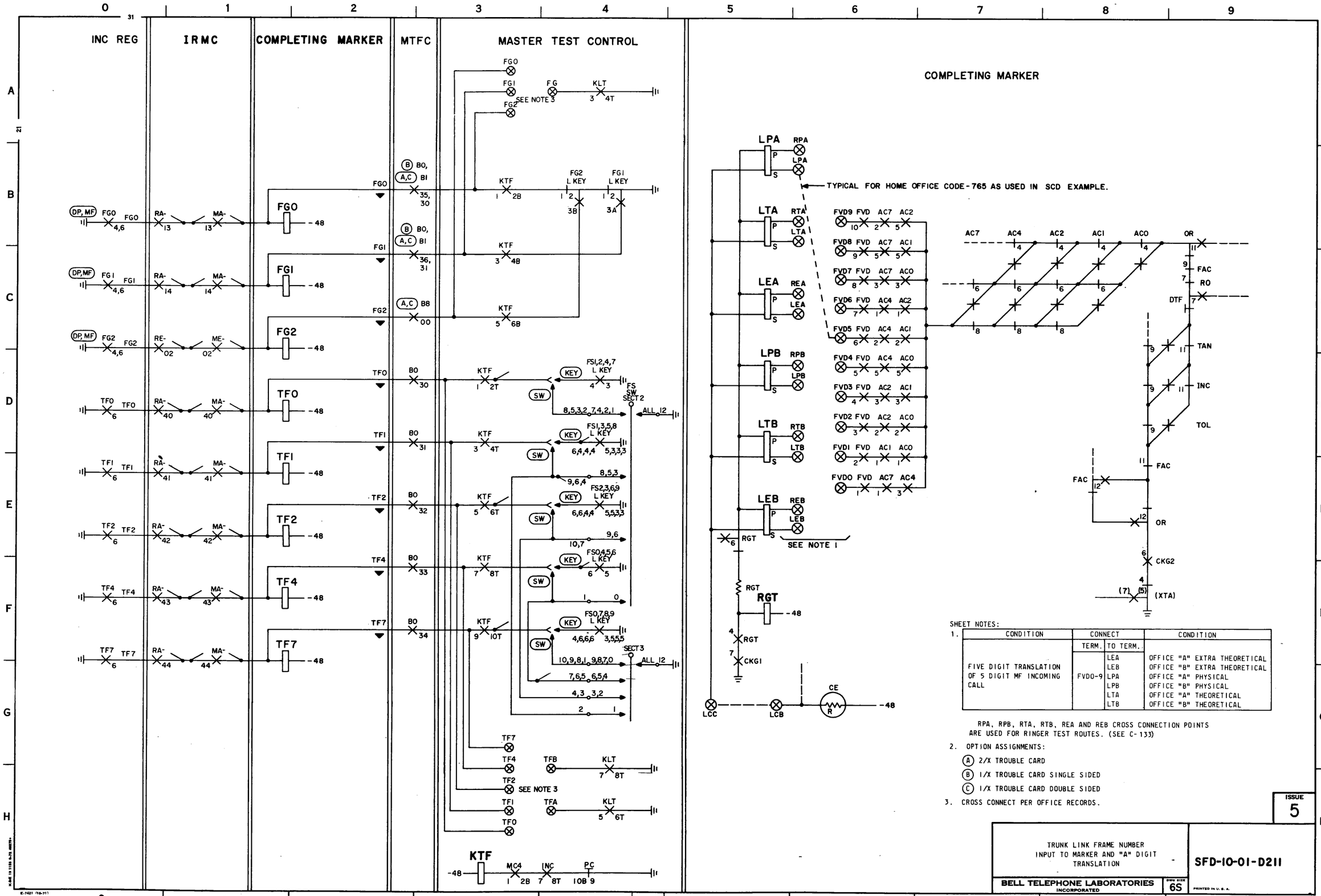

SHEET NOTES:

1.

CONDITION	CONNECT TERM.	CONNECT TO TERM.	CONDITION
FIVE DIGIT TRANSLATION OF 5 DIGIT MF INCOMING CALL	FVDO-9	LEA	OFFICE "A" EXTRA THEORETICAL
		LEB	OFFICE "B" EXTRA THEORETICAL
		LPA	OFFICE "A" PHYSICAL
		LPB	OFFICE "B" PHYSICAL
		LTA	OFFICE "A" THEORETICAL
		LTB	OFFICE "B" THEORETICAL

RPA, RPB, RTA, RTB, REA AND REB CROSS CONNECTION POINTS ARE USED FOR RINGER TEST ROUTES. (SEE C-133)

2. OPTION ASSIGNMENTS:
   - (A) 2/X TROUBLE CARD
   - (B) 1/X TROUBLE CARD SINGLE SIDED
   - (C) 1/X TROUBLE CARD DOUBLE SIDED
3. CROSS CONNECT PER OFFICE RECORDS.

ISSUE 5

TRUNK LINK FRAME NUMBER INPUT TO MARKER AND "A" DIGIT TRANSLATION

SFD-10-01-D211

BELL TELEPHONE LABORATORIES INCORPORATED

DWG SIZE 6S

PRINTED IN U.S.A.

SFD-10-01-D211

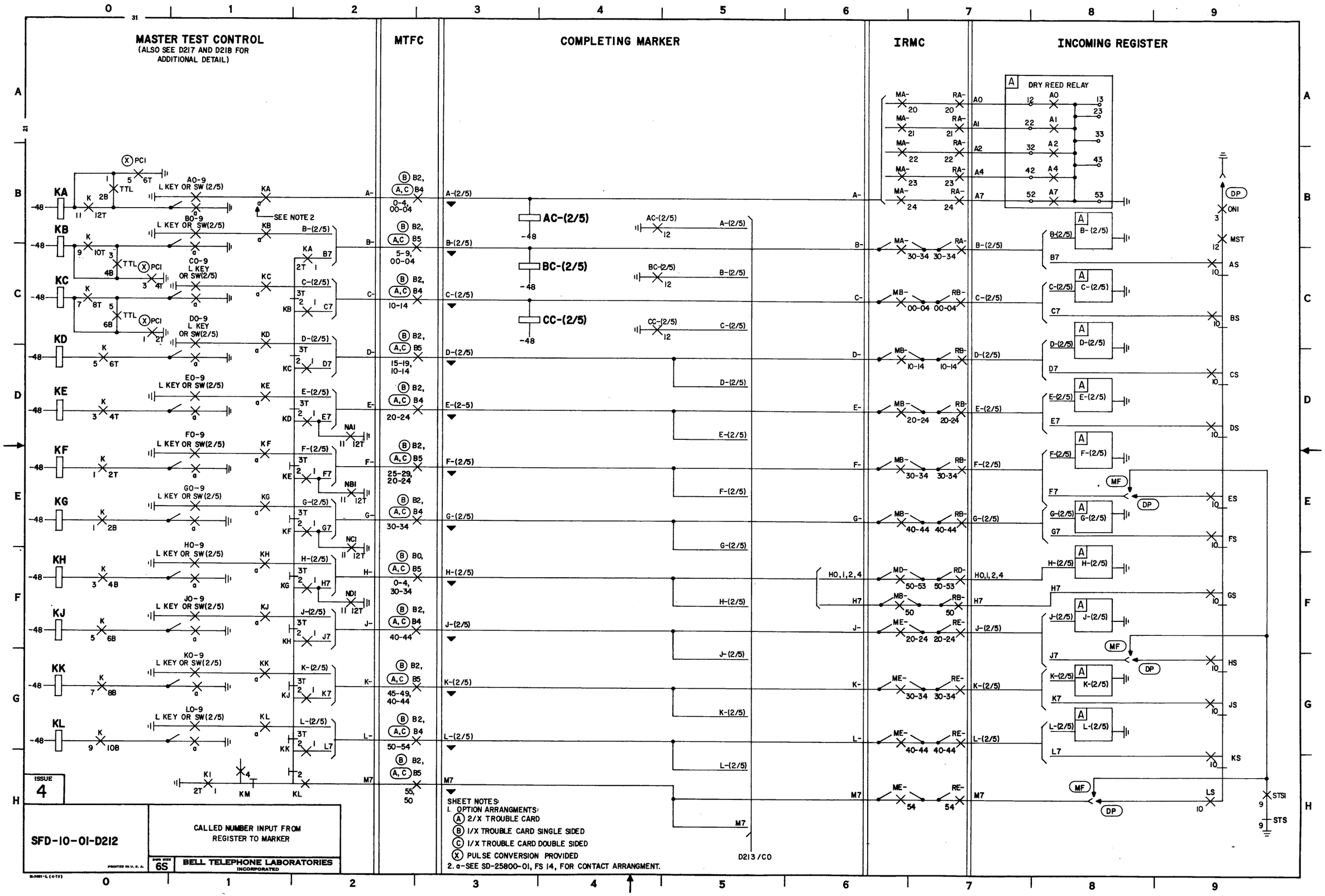

SFD-10-01-D212

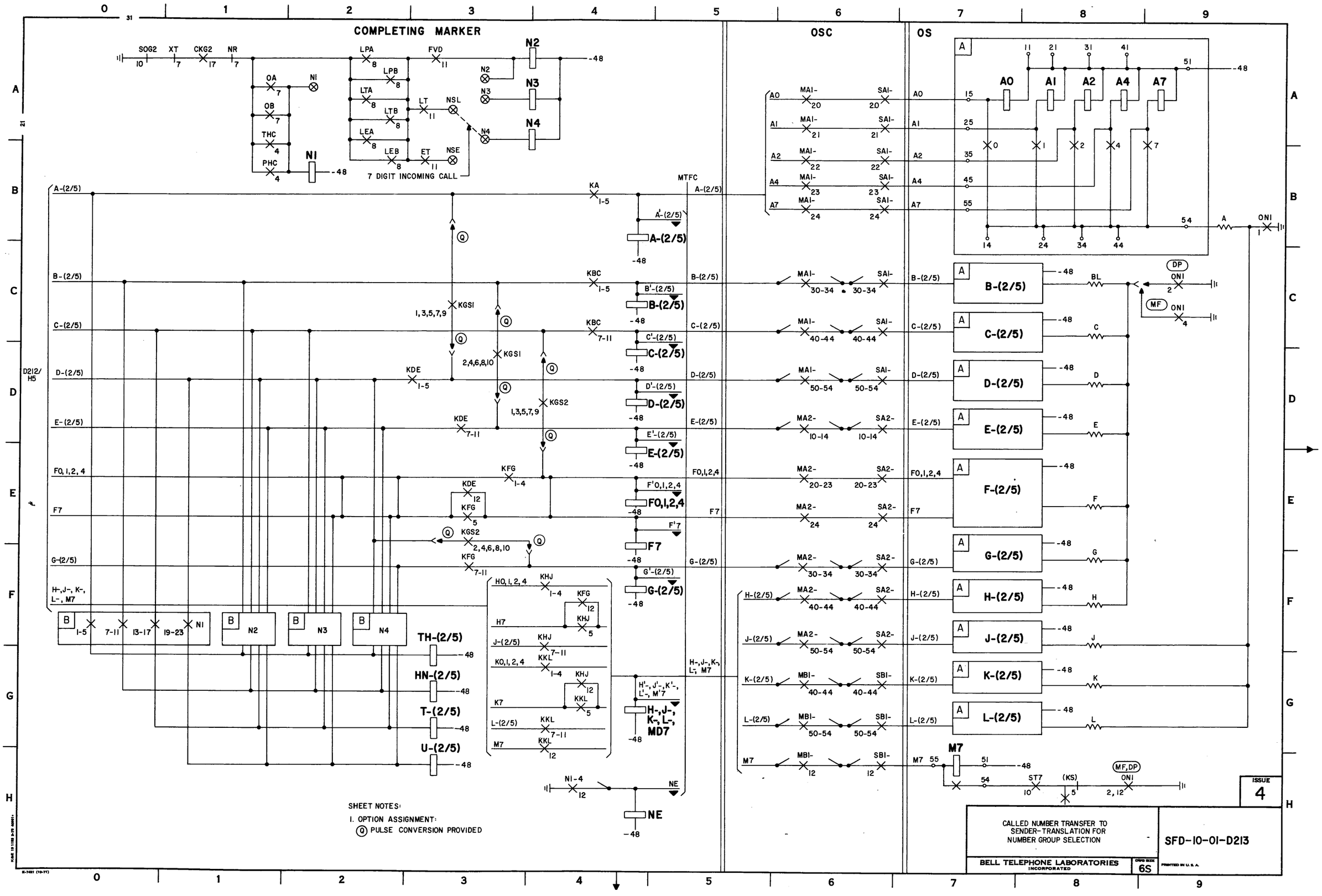

SFD-10-01-D213

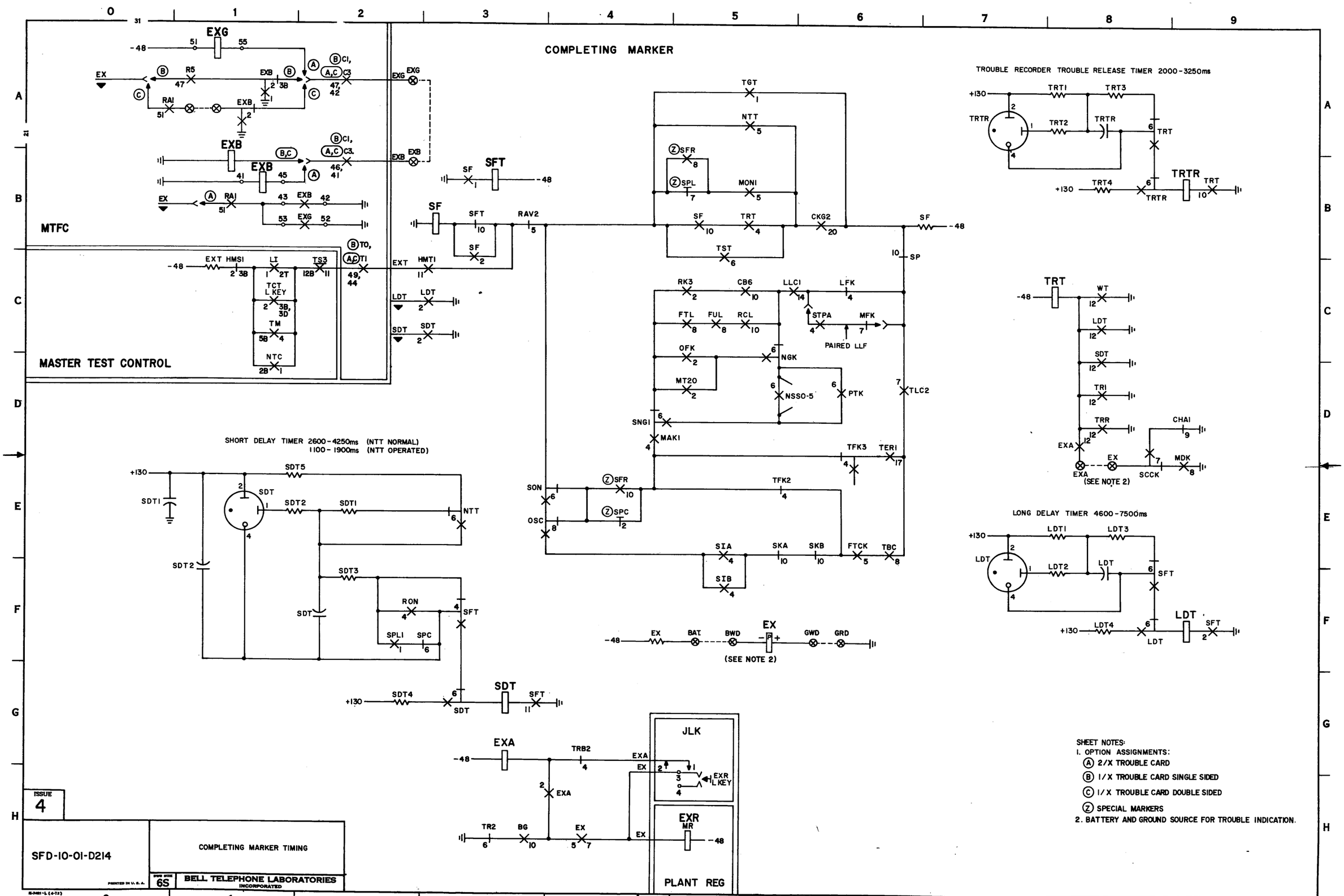

ISSUE 4

SFD-10-01-D214

COMPLETING MARKER TIMING

BELL TELEPHONE LABORATORIES INCORPORATED

SIZE 6S

PRINTED IN U.S.A.

SFD-10-01-D214

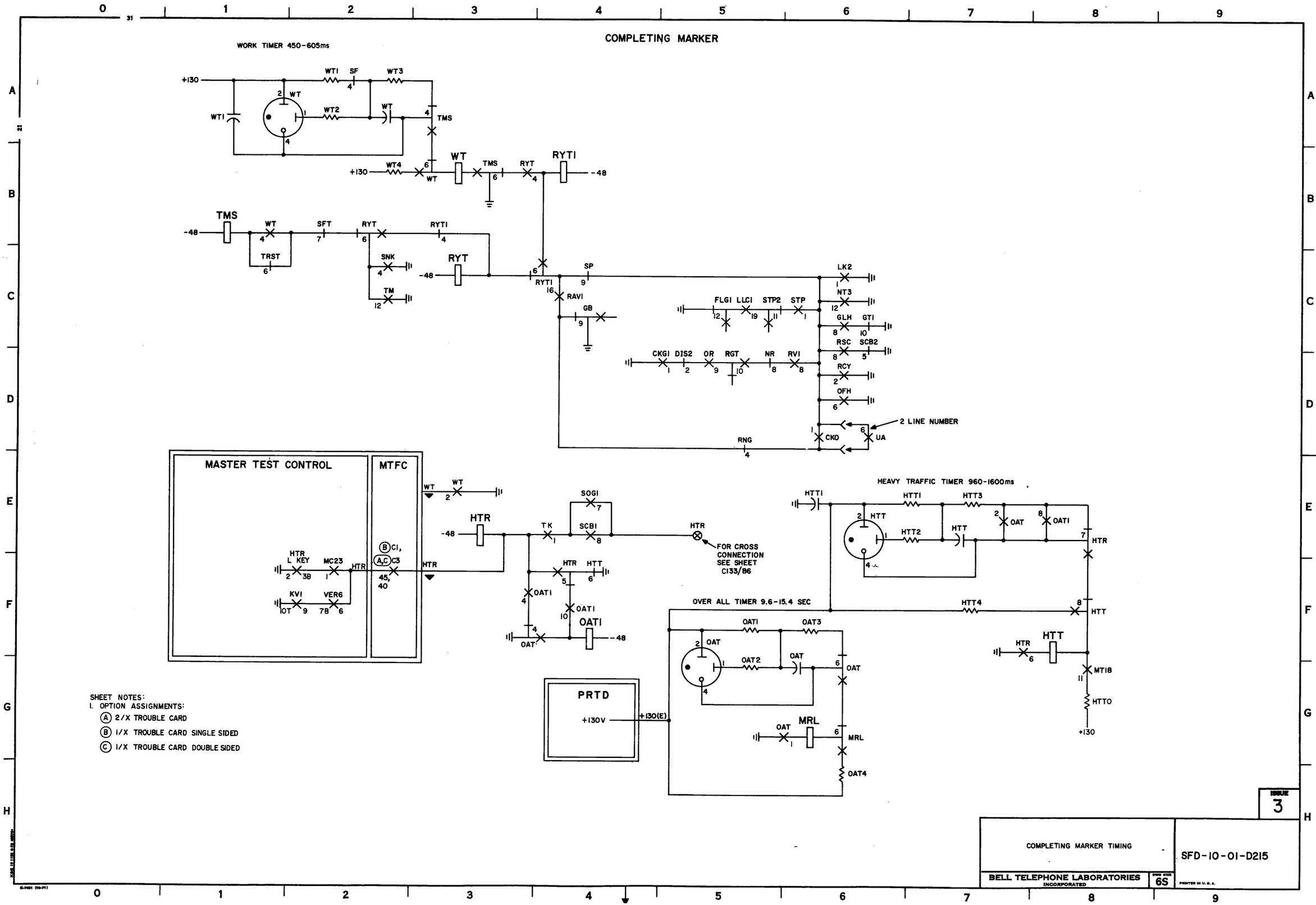

SFD-10-01-D215

LONG DELAY (LDT) & SHORT DELAY TIMING (SDT) CYCLES ON TERMINATING (TER) CALL

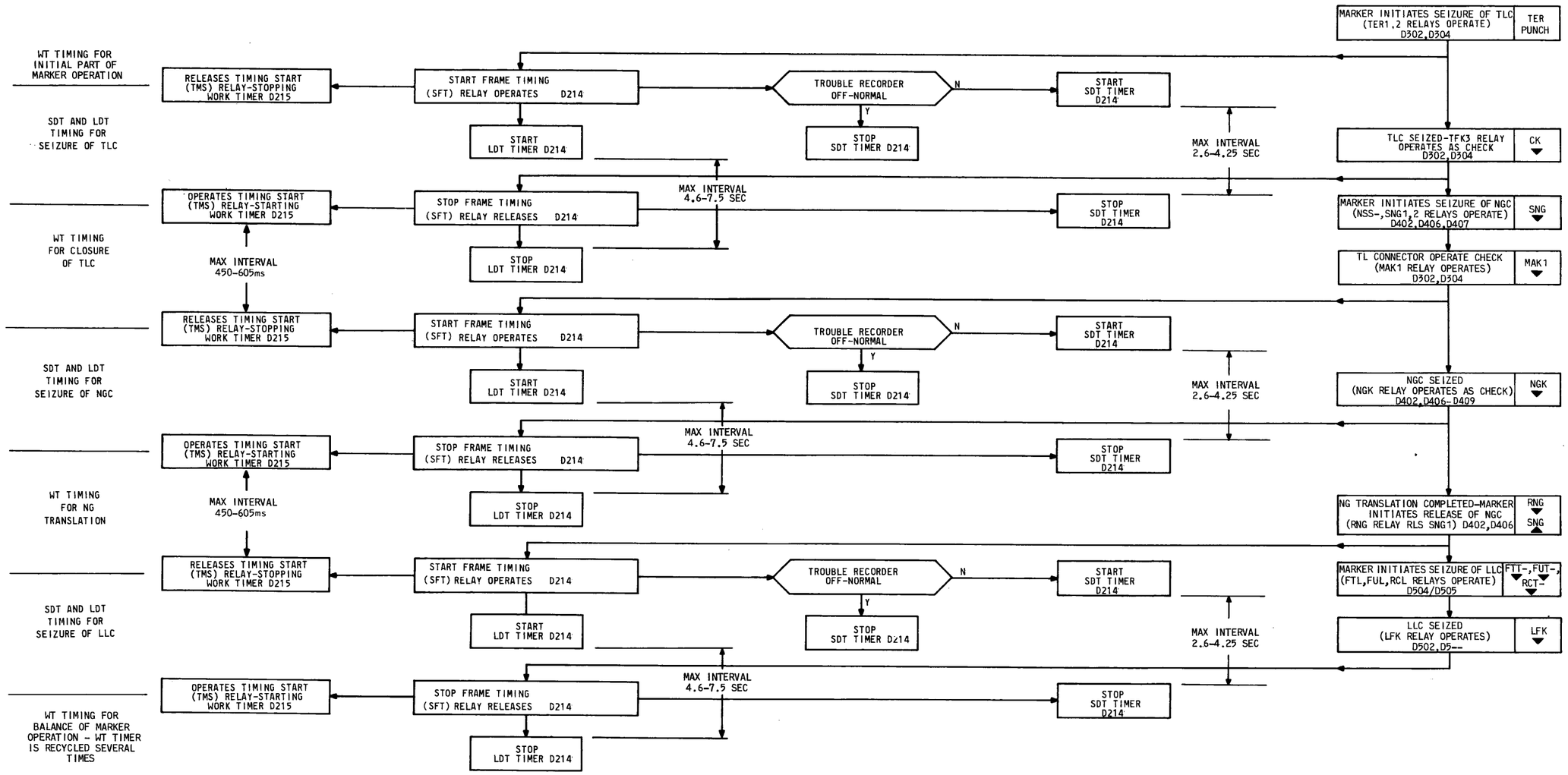

ISSUE 3

SFD-10-01-D216

FLOW CHART
LONG DELAY (LDT) & SHORT DELAY (SDT)
TIMING CYCLES ON TER CALLS

DWG SIZE 6S

BELL TELEPHONE LABORATORIES INCORPORATED

PRINTED IN U.S.A.

E-2421-L (4-72)

SFD-10-01-D216

MTC

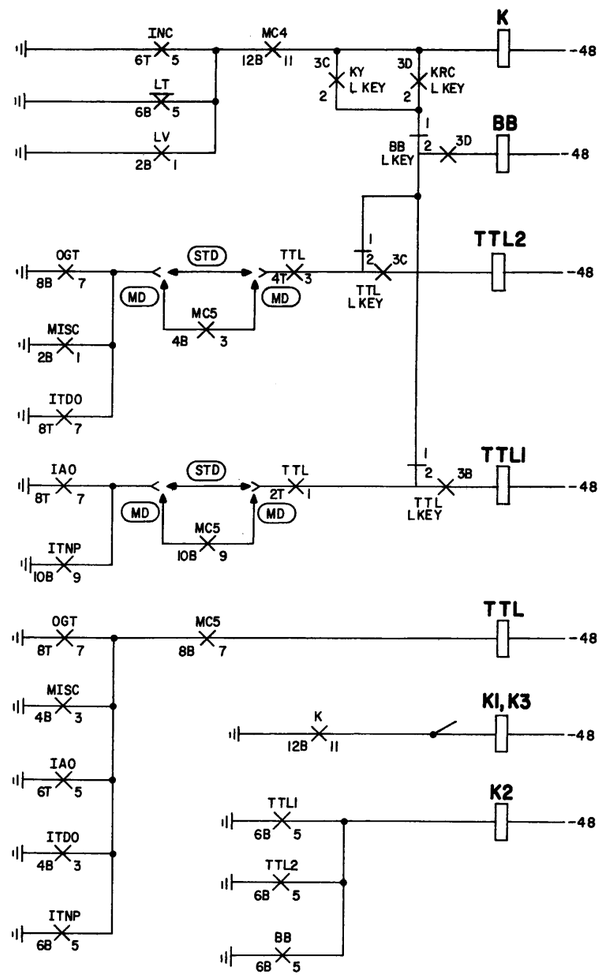

SFD-10-01-D217

TEST CALL DIGIT CONTROL	SFD-10-01-D217
BELL TELEPHONE LABORATORIES INCORPORATED	6S

ISSUE 4

PRINTED IN U.S.A.

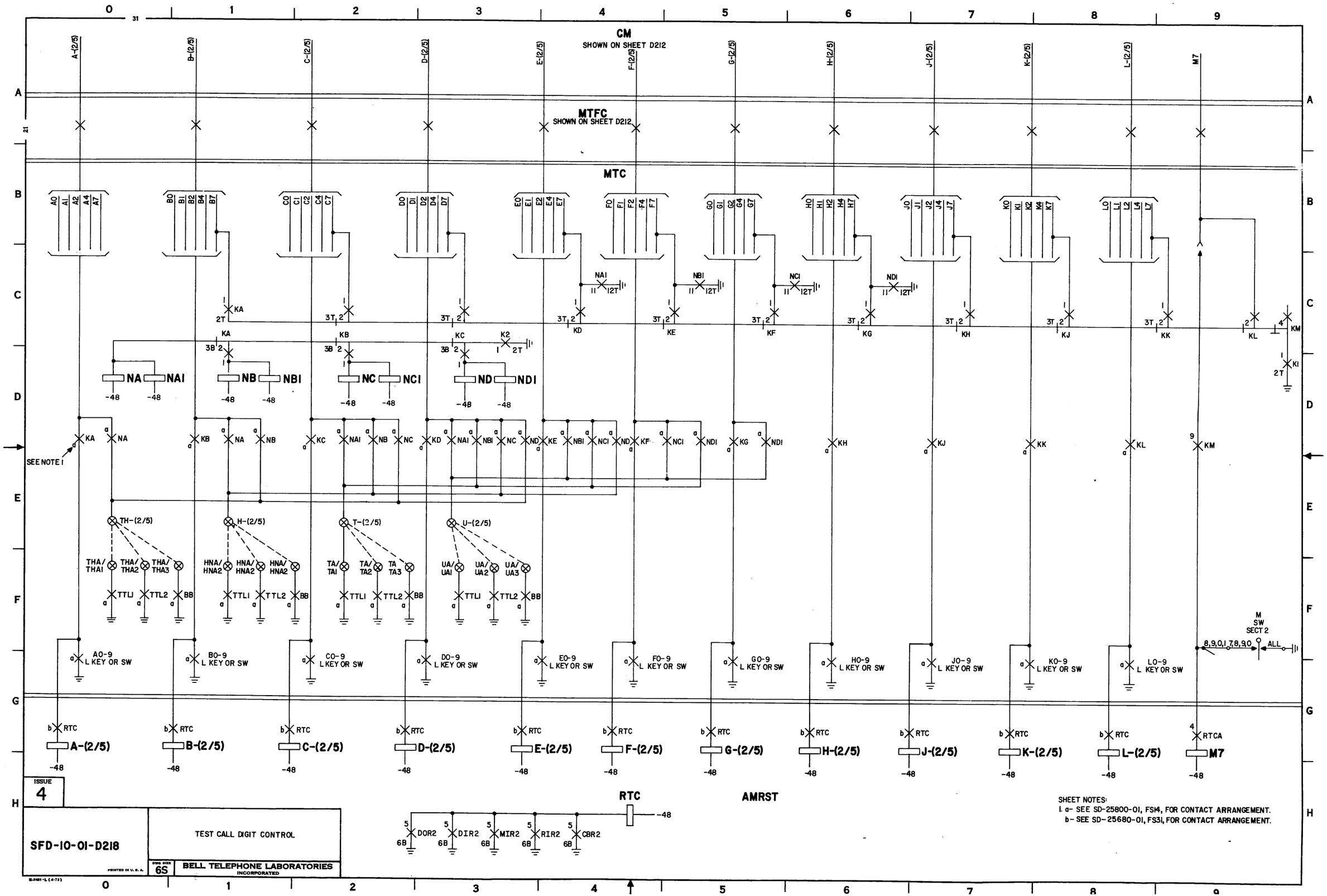

SHEET NOTES:
1. a- SEE SD-25800-01, FS14, FOR CONTACT ARRANGEMENT.
b- SEE SD-25680-01, FS31, FOR CONTACT ARRANGEMENT.

SFD-10-01-D218

ESTABLISHING INCOMING TRUNK CONNECTION

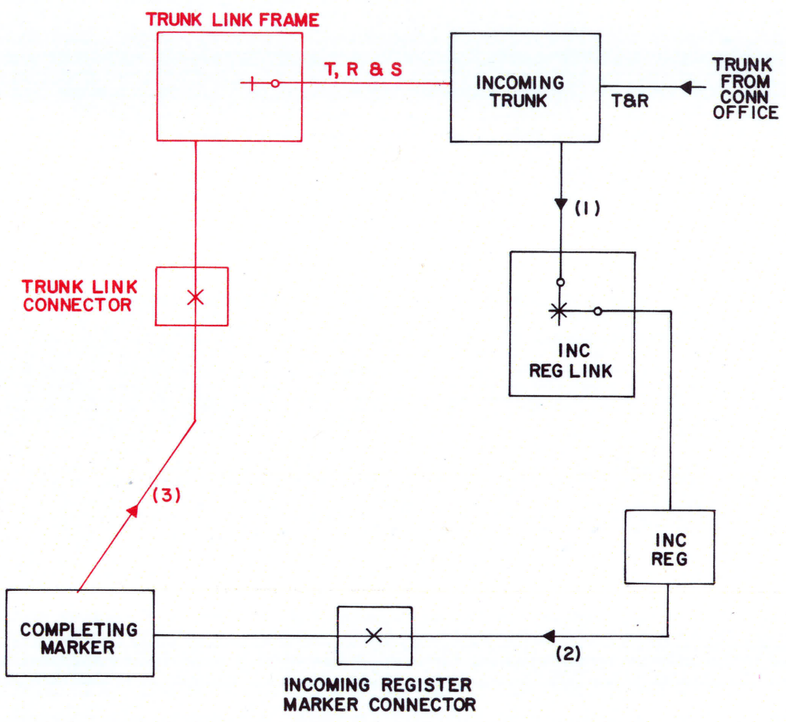

INDEX

CAUTION!

DUE TO THE SIMPLIFIED NATURE OF THIS DOCUMENT, INFORMATION SHOWN MAY NOT BE COMPLETE.

ISSUE 3

PART D3
CONNECTION TO TRUNK LINK FRAME

SFD-10-01-D301

BELL TELEPHONE LABORATORIES INCORPORATED

DWG SIZE 6S

PRINTED IN U. S. A.

SFD-10-01-D301
2 SHEETS, SH 1

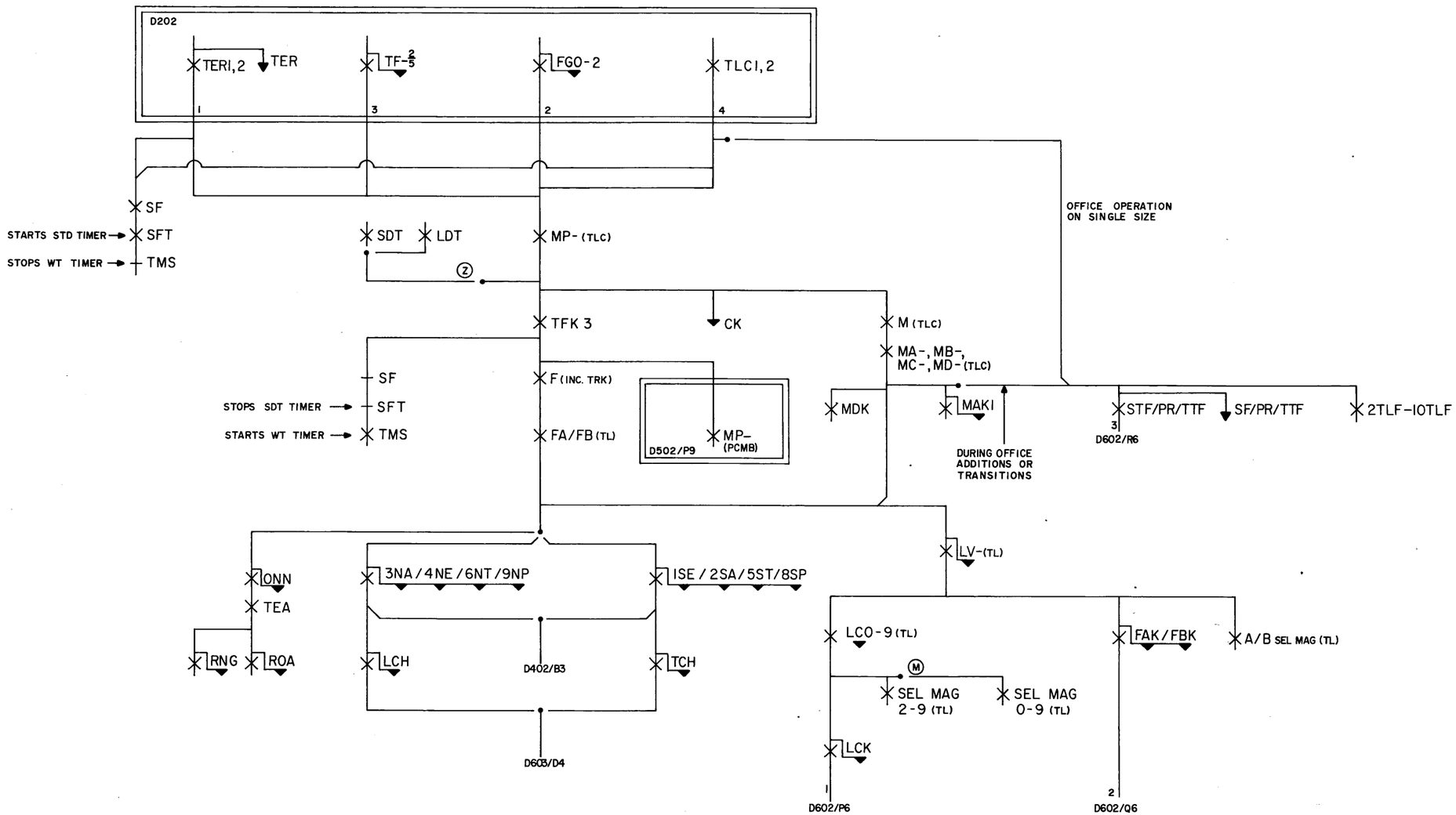

SHEET NOTES:

1. OPTION ASSIGNMENTS:

(M) TRUNK LINK (SD-27879-01)

(Z) PREVENT MARKER BLOCKAGE DUE TO INABILITY OF A MARKER TO SEIZE A TRUNK LINK FRAME.

ISSUE 4

SFD-10-01-D302

SEQUENCE CHART
SEIZURE OF TRUNK
LINK FRAME AND TRUNK

PRINTED IN U.S.A.

SIZE 6S

BELL TELEPHONE LABORATORIES INCORPORATED

CBL-267(10-75)

SFD-10-01-D302

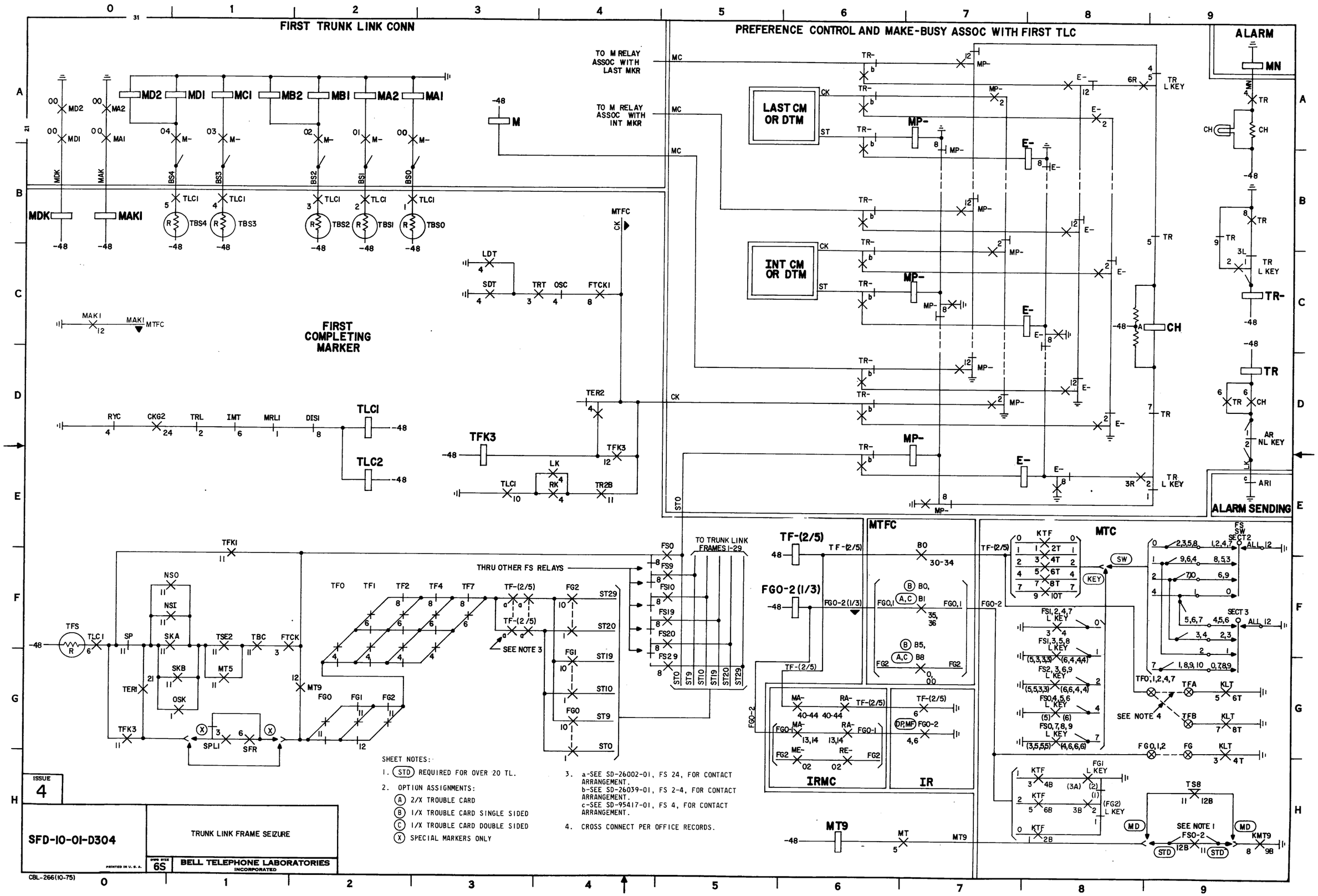

SFD-10-01-D304

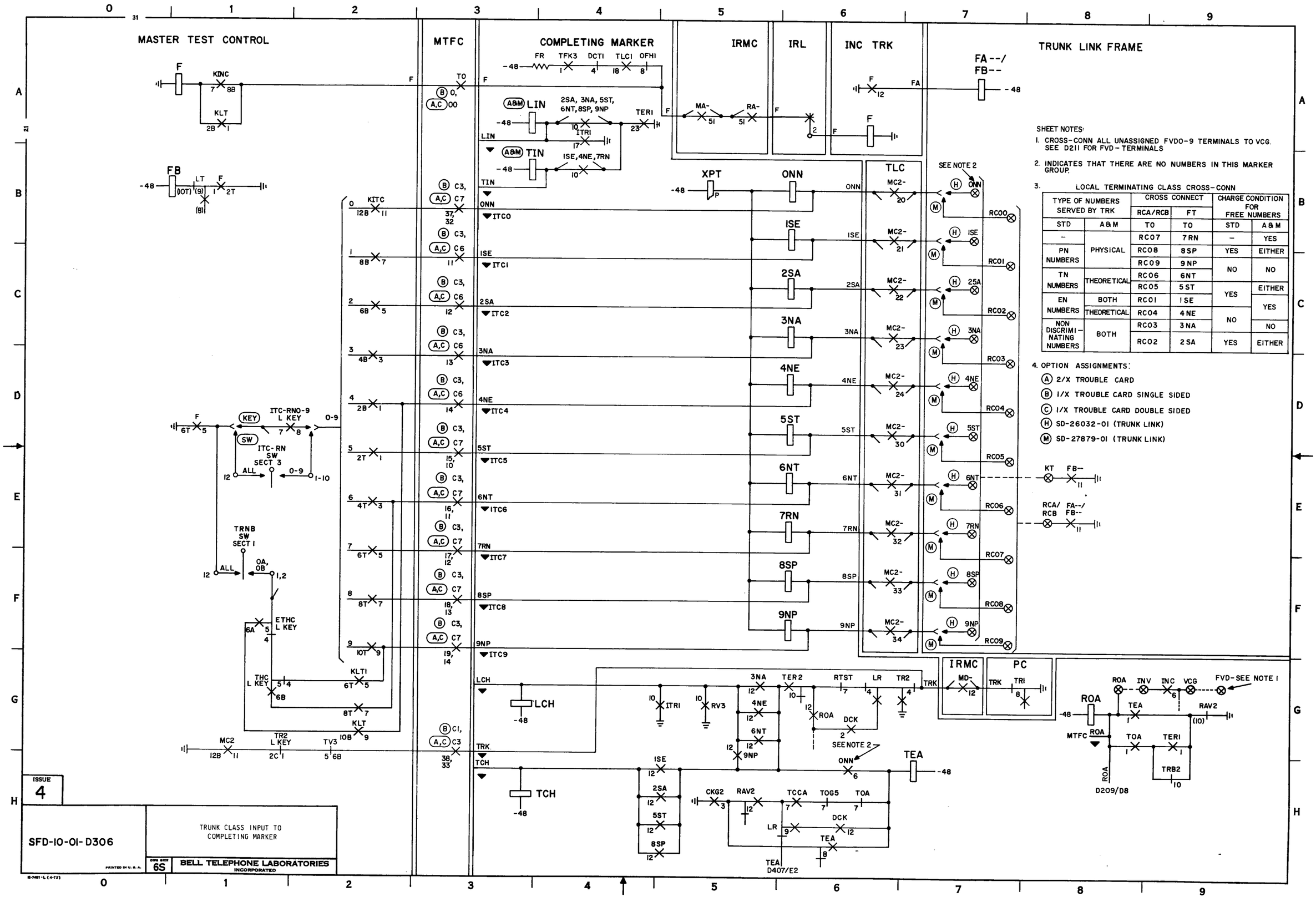

TYPE OF NUMBERS SERVED BY TRK		CROSS CONNECT		CHARGE CONDITION FOR FREE NUMBERS	
		RCA/RCB	FT		
STD	A&M	TO	TO	STD	A&M
–	PHYSICAL	RC07	7RN	–	YES
PN NUMBERS		RC08	8SP	YES	EITHER
		RC09	9NP	NO	NO
TN NUMBERS	THEORETICAL	RC06	6NT		
		RC05	5ST	YES	EITHER
EN NUMBERS	BOTH	RC01	1SE		YES
	THEORETICAL	RC04	4NE	NO	
NON DISCRIMI-NATING NUMBERS	BOTH	RC03	3NA		NO
		RC02	2SA	YES	EITHER

SFD-10-01-D306

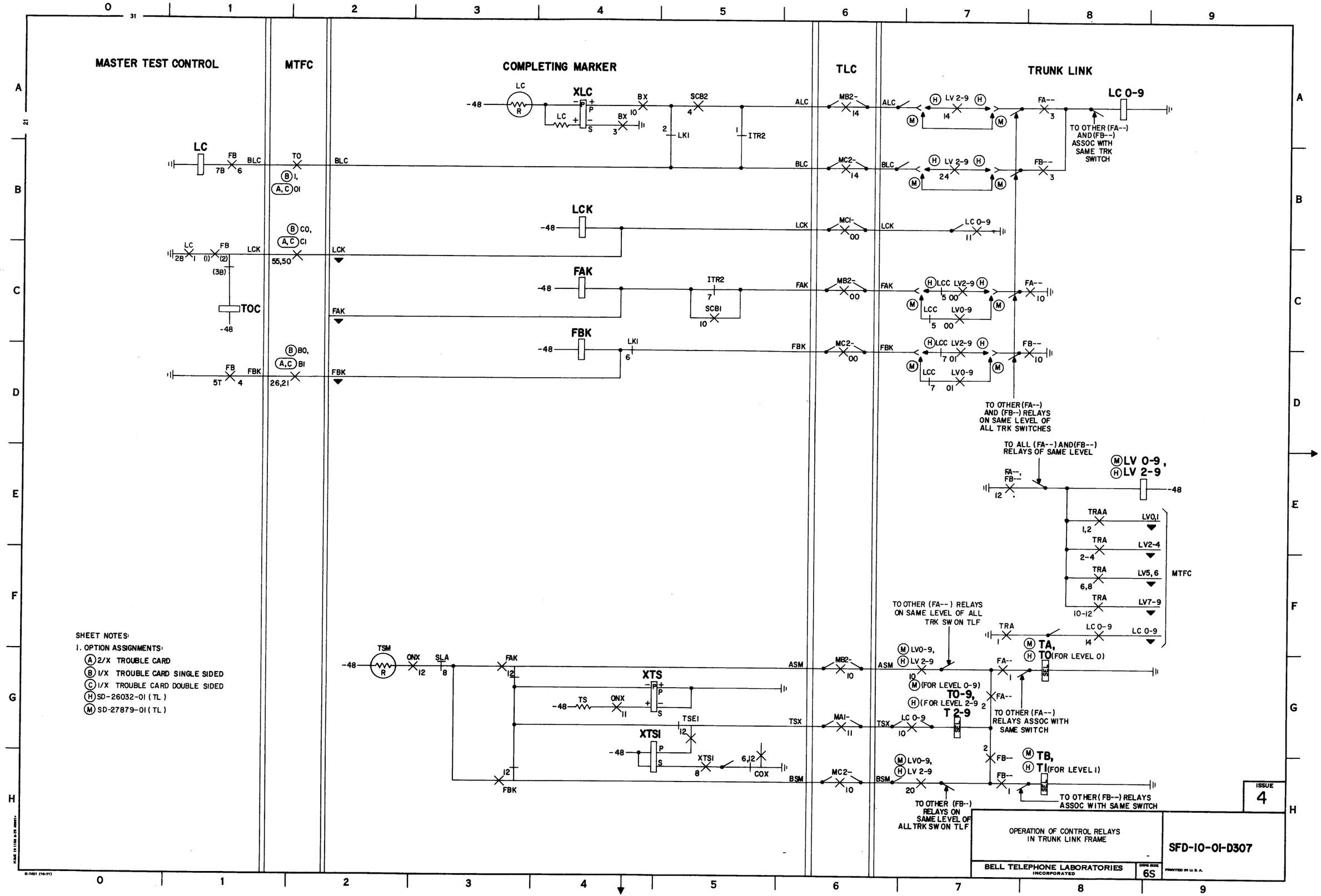

SFD-10-01-D307

ESTABLISHING INCOMING TRUNK CONNECTION

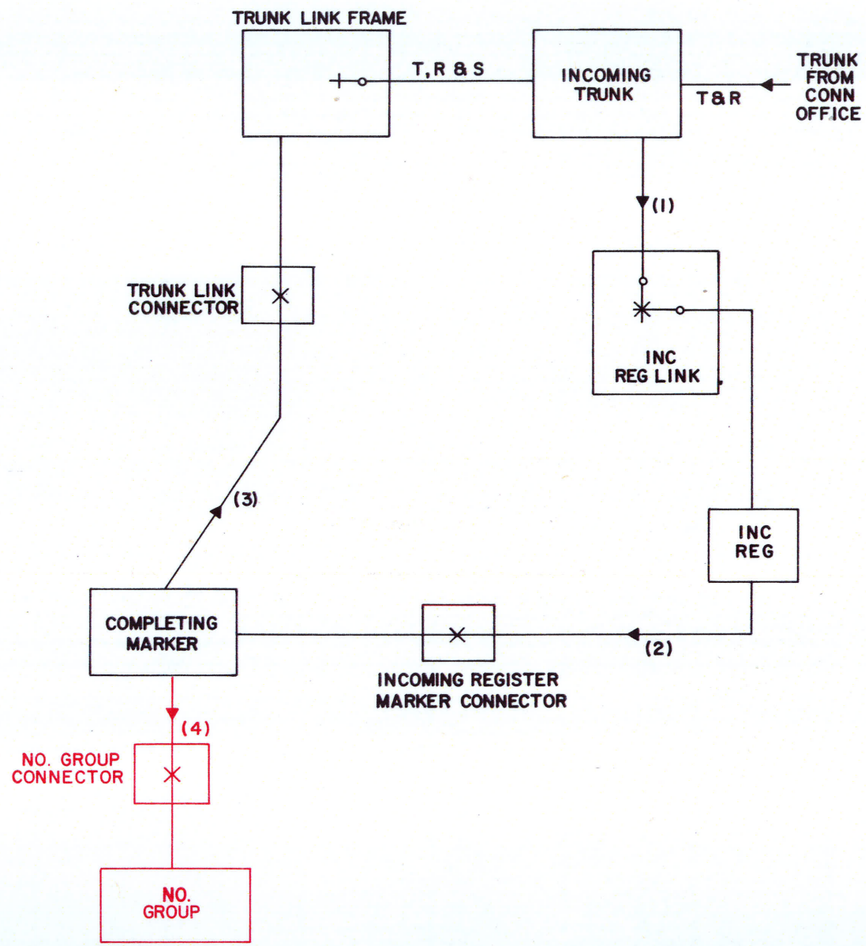

INDEX

CAUTION!

DUE TO THE SIMPLIFIED NATURE OF THIS DOCUMENT, INFORMATION SHOWN MAY NOT BE COMPLETE.

ISSUE 3

PART D4
CONNECTION TO NUMBER GROUP

SFD-10-01-D401

BELL TELEPHONE LABORATORIES INCORPORATED

DWG SIZE 6S

PRINTED IN U. S. A.

SFD-10-01-D401
2 SHEETS, SH 1

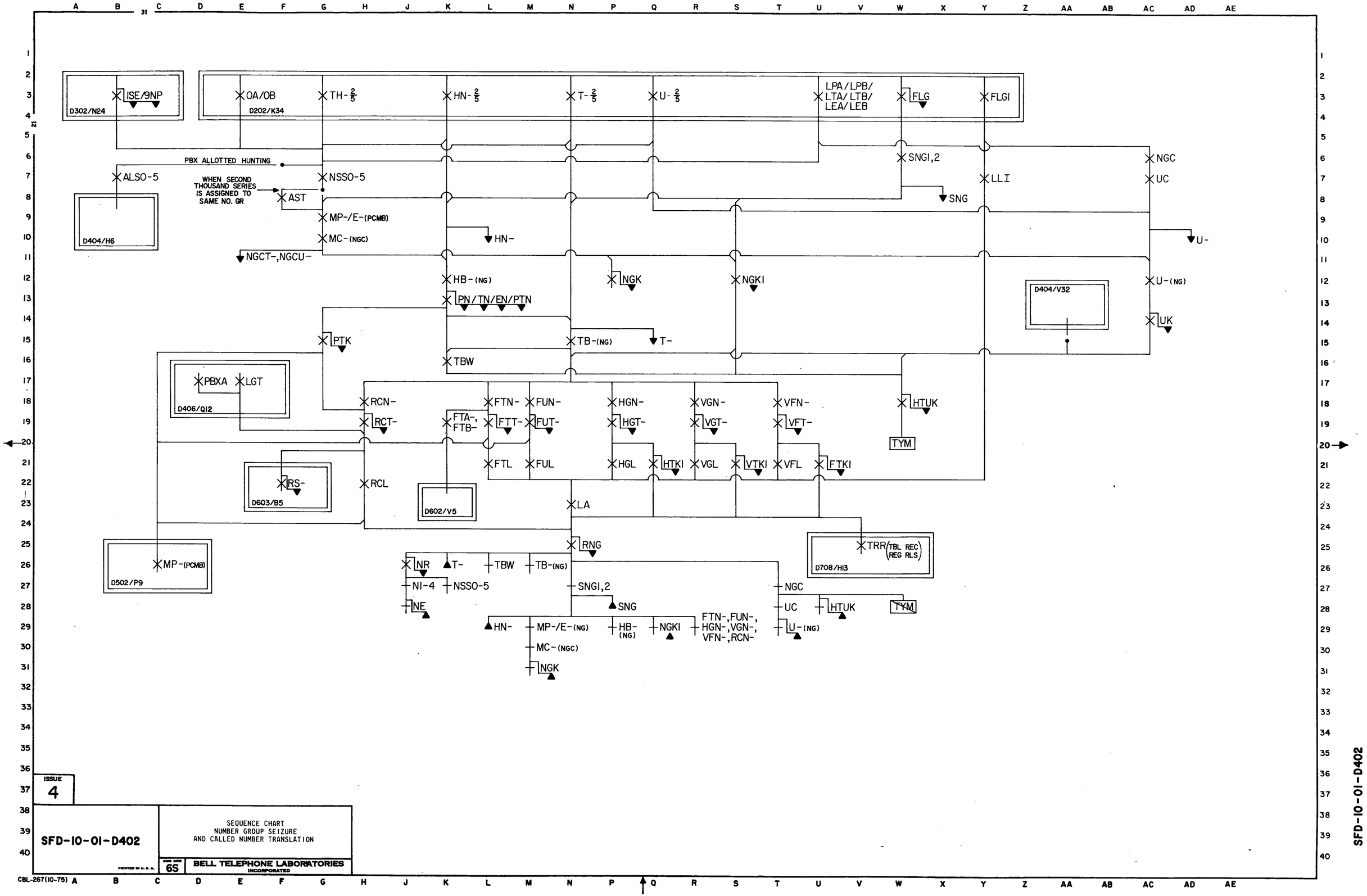

ISSUE 4

SFD-10-01-D402

SEQUENCE CHART
NUMBER GROUP SEIZURE
AND CALLED NUMBER TRANSLATION

SIZE 6S

BELL TELEPHONE LABORATORIES INCORPORATED

PRINTED IN U.S.A.

CBL-267(10-75)

SFD-10-01-D402

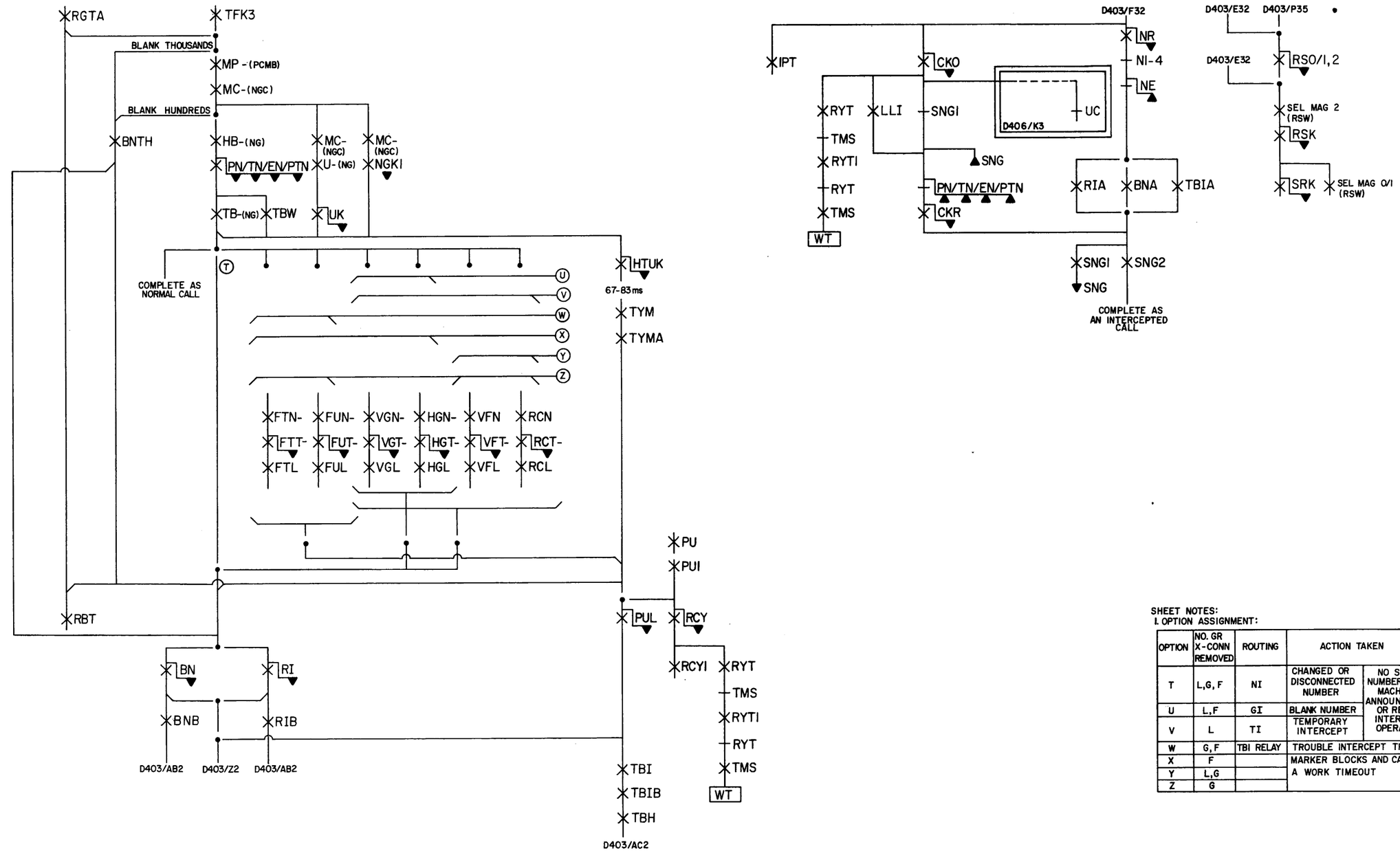

SHEET NOTES:
1. OPTION ASSIGNMENT:

OPTION	NO. GR X-CONN REMOVED	ROUTING	ACTION TAKEN	
T	L,G,F	NI	CHANGED OR DISCONNECTED NUMBER	NO SUCH NUMBER TONE, MACHINE ANNOUNCEMENT OR REGULAR INTERCEPT OPERATOR
U	L,F	GI	BLANK NUMBER	
V	L	TI	TEMPORARY INTERCEPT	
W	G,F	TBI RELAY	TROUBLE INTERCEPT TRUNK	
X	F		MARKER BLOCKS AND CAUSES A WORK TIMEOUT	
Y	L,G			
Z	G			

ISSUE 4

SEQUENCE CHART
INTERCEPT TREATMENT

SFD-10-01-D403

BELL TELEPHONE LABORATORIES INCORPORATED

DWG SIZE 6S

PRINTED IN U.S.A.

SFD-10-01-D403

BRUNING 44-131 24092

E-7421-B (10-71)

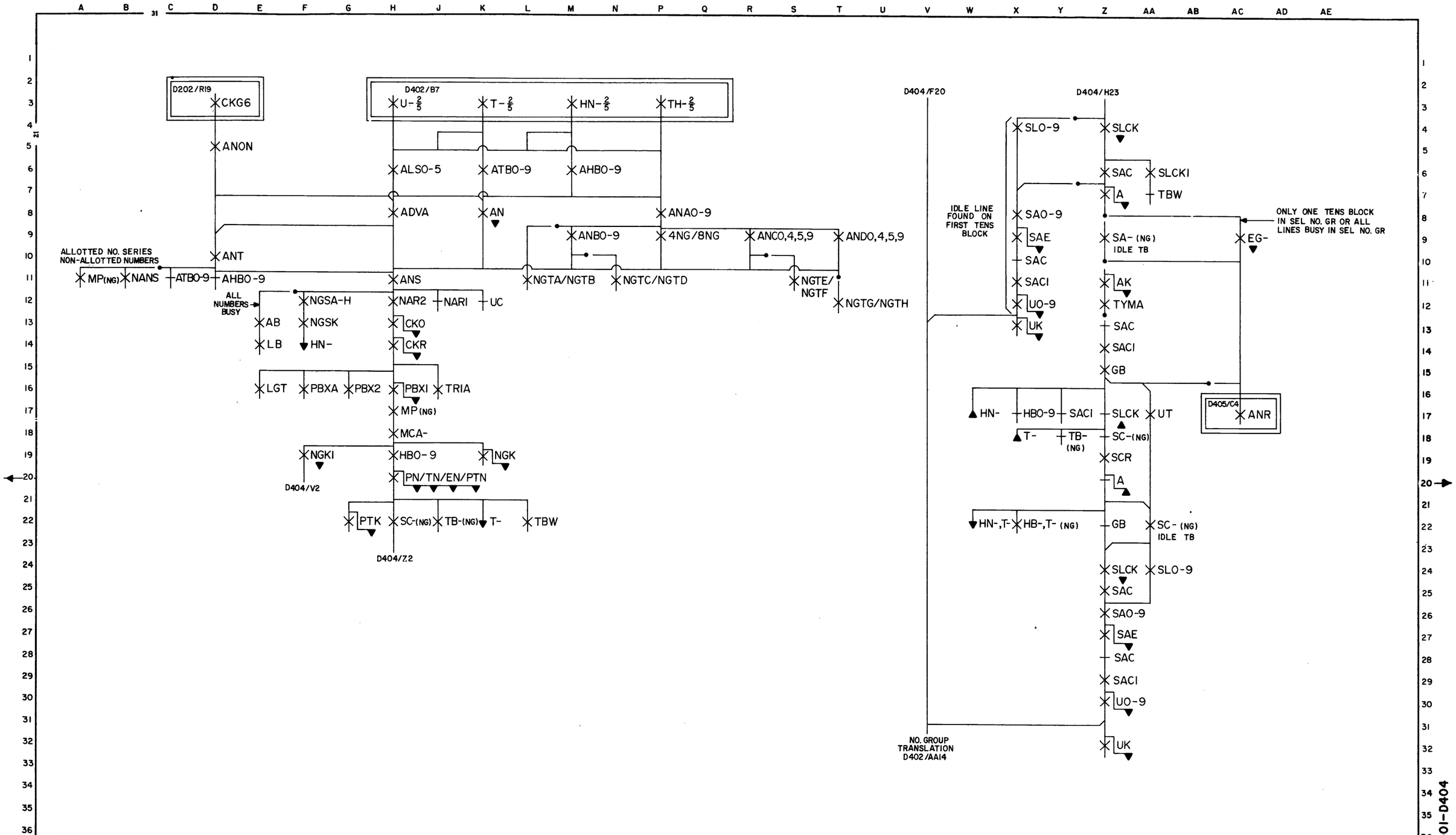

ISSUE 4

SFD-10-01-D404

SEQUENCE CHART
PBX ALLOTTED
TERMINAL HUNTING

PRINTED IN U.S.A.

DWG SIZE 6S

BELL TELEPHONE LABORATORIES
INCORPORATED

CBL-267(10-75)

SFD-10-01-D404

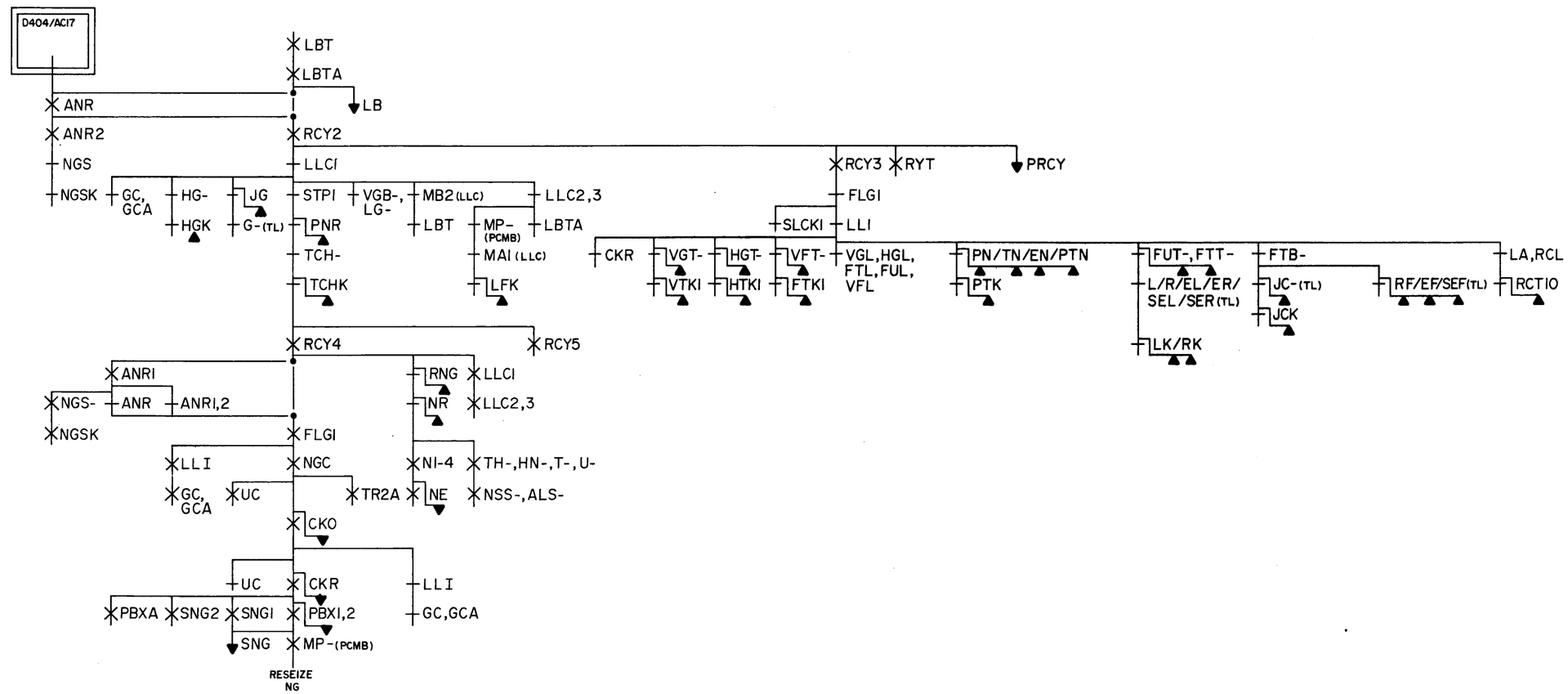

SEQUENCE CHART
PBX RECYCLE

ISSUE 4

SFD-10-01-D405

BELL TELEPHONE LABORATORIES INCORPORATED

SYM SIZE 6S

PRINTED IN U.S.A.

SFD-10-01-D405

BRUNING 44-131 24092

E-7421-B (10-71)

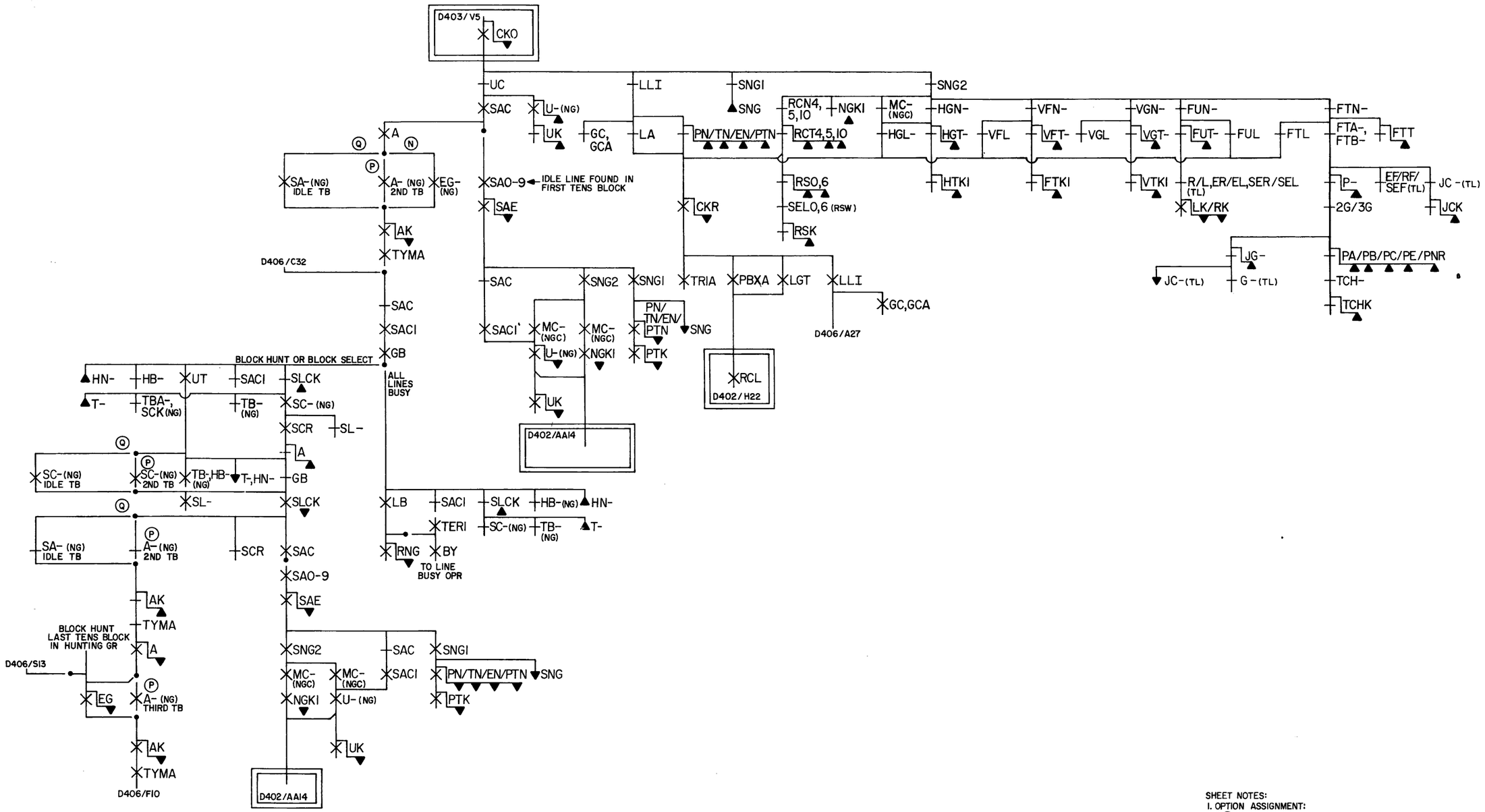

SHEET NOTES:
1. OPTION ASSIGNMENT:
(N) PBX IN ONE TENS BLOCK ONLY.
(P) PBX IN TWO OR MORE TENS BLOCK; BLOCK HUNT OPERATION.
(Q) PBX IN THREE OR MORE TENS BLOCK; BLOCK SELECT OPERATION.

ISSUE 4

SFD-10-01-D406

SEQUENCE CHART
TERMINAL HUNTING
NON-ALLOTTED

PRINTED IN U.S.A.

DWG SIZE 6S

BELL TELEPHONE LABORATORIES INCORPORATED

CBL-267(10-75)

SFD-10-01-D406

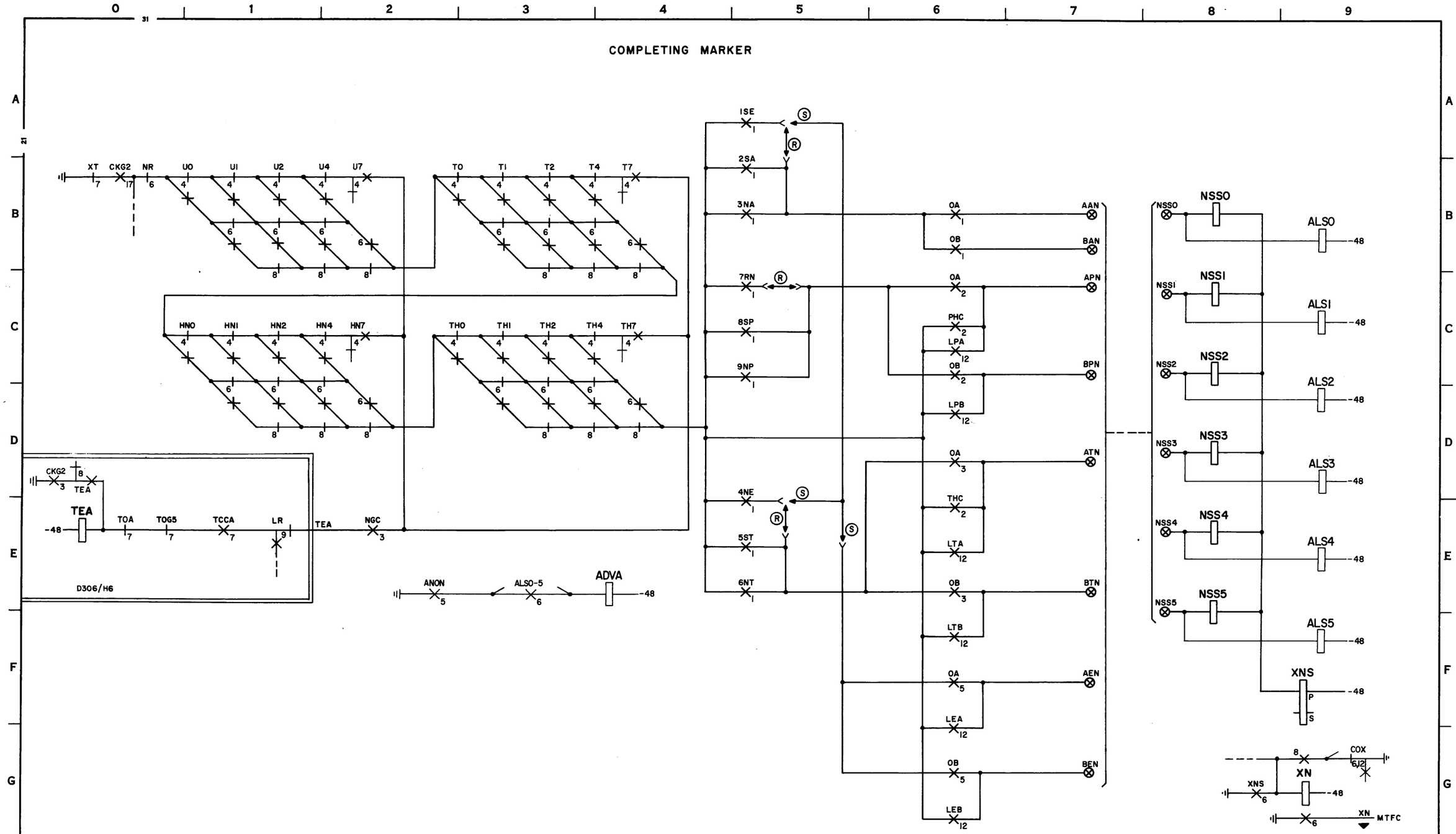

SFD-10-01-D407

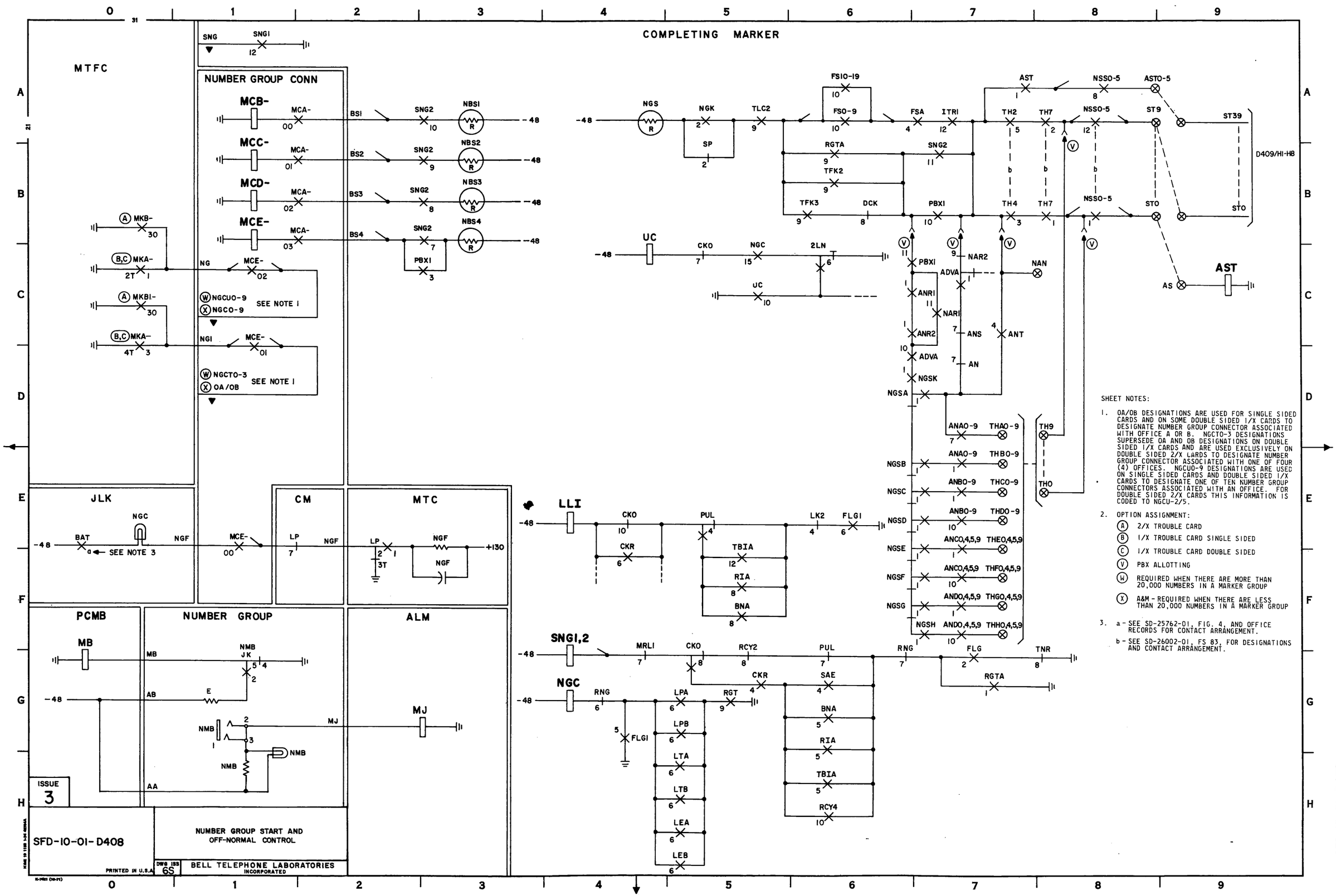

SFD-10-01-D408

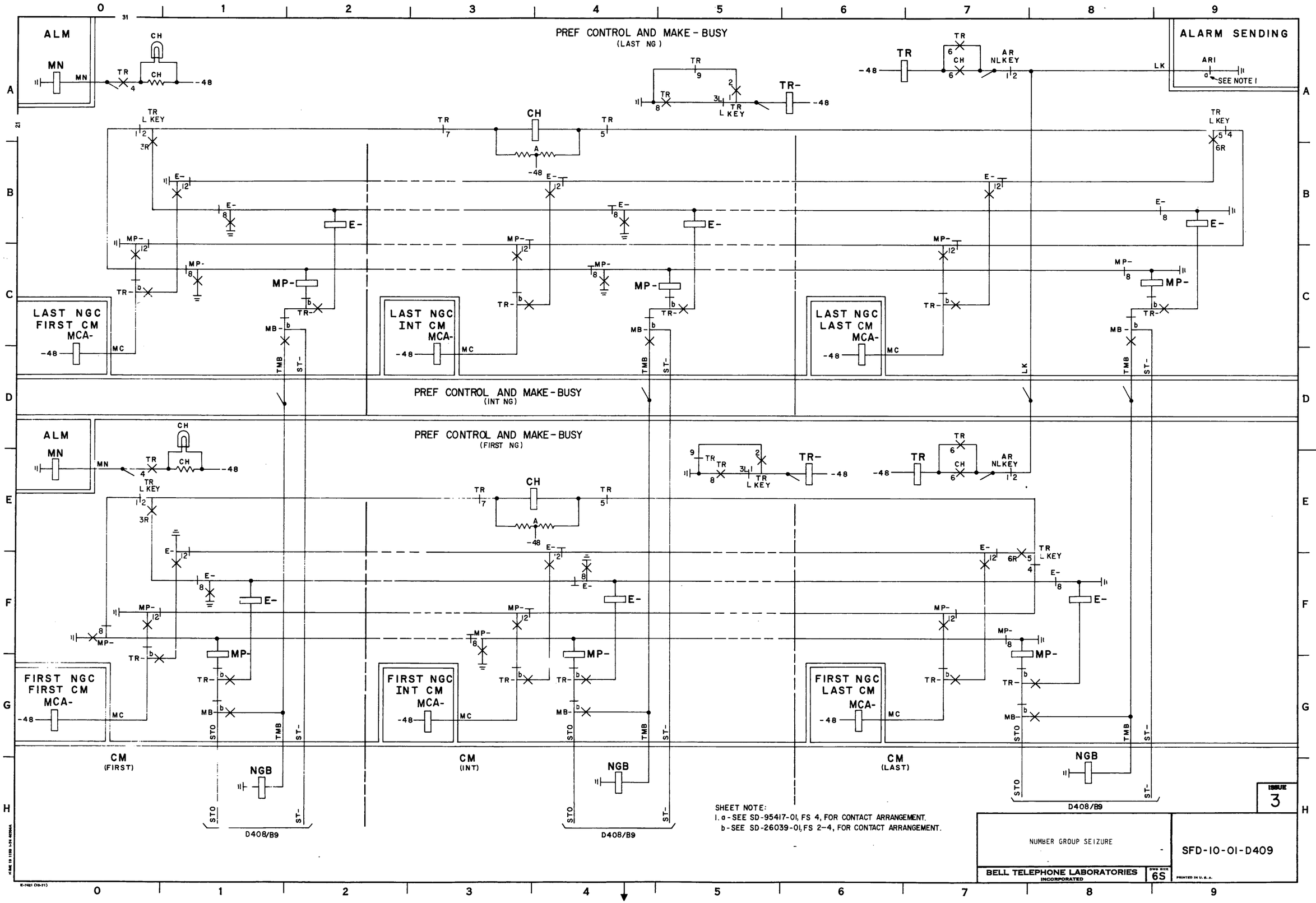

SFD-10-01-D409

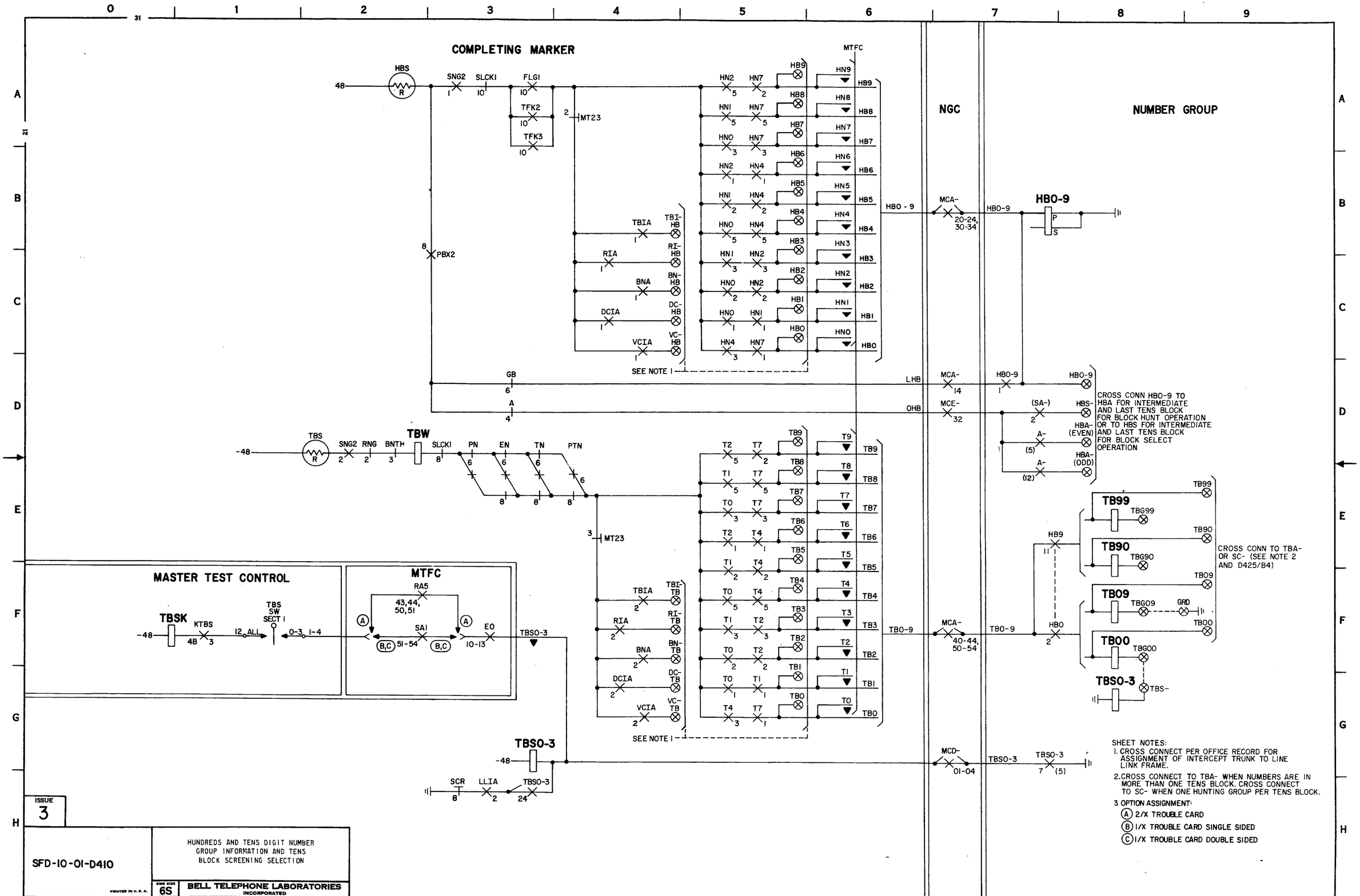
COMPLETING MARKER
NGC
NUMBER GROUP
HBS
SNG2
SLCKI
FLGI
TFK2
TFK3
MT23
PBX2
TBIA
RIA
BNA
DCIA
VCIA
SEE NOTE 1
MTFC
HBO-9
MCA-
20-24, 30-34
GB
A
LHB
OHB
MCE-
CROSS CONN HBO-9 TO HBA FOR INTERMEDIATE AND LAST TENS BLOCK FOR BLOCK HUNT OPERATION OR TO HBS FOR INTERMEDIATE AND LAST TENS BLOCK FOR BLOCK SELECT OPERATION
TBS
TBW
SNG2
RNG
BNTH
SLCKI
PN
EN
TN
PTN
MT23
TB99
TBG99
TB90
TBG90
TB09
TBG09
GRD
TB00
TBG00
TBSO-3
TBS-
CROSS CONN TO TBA- OR SC- (SEE NOTE 2 AND D425/B4)
MASTER TEST CONTROL
TBSK
KTBS
TBS SW SECT 1
MTFC
RA5
43,44, 50,51
SAI
51-54
10-13
TBSO-3
MCA-
40-44, 50-54
MCD-
01-04
SCR
LLIA
SHEET NOTES:
1. CROSS CONNECT PER OFFICE RECORD FOR ASSIGNMENT OF INTERCEPT TRUNK TO LINE LINK FRAME.
2. CROSS CONNECT TO TBA- WHEN NUMBERS ARE IN MORE THAN ONE TENS BLOCK. CROSS CONNECT TO SC- WHEN ONE HUNTING GROUP PER TENS BLOCK.
3. OPTION ASSIGNMENT:
(A) 2/X TROUBLE CARD
(B) 1/X TROUBLE CARD SINGLE SIDED
(C) 1/X TROUBLE CARD DOUBLE SIDED
ISSUE 3
SFD-10-01-D410
HUNDREDS AND TENS DIGIT NUMBER GROUP INFORMATION AND TENS BLOCK SCREENING SELECTION
DWG SIZE 6S
BELL TELEPHONE LABORATORIES INCORPORATED
PRINTED IN U.S.A.
SFD-10-01-D410

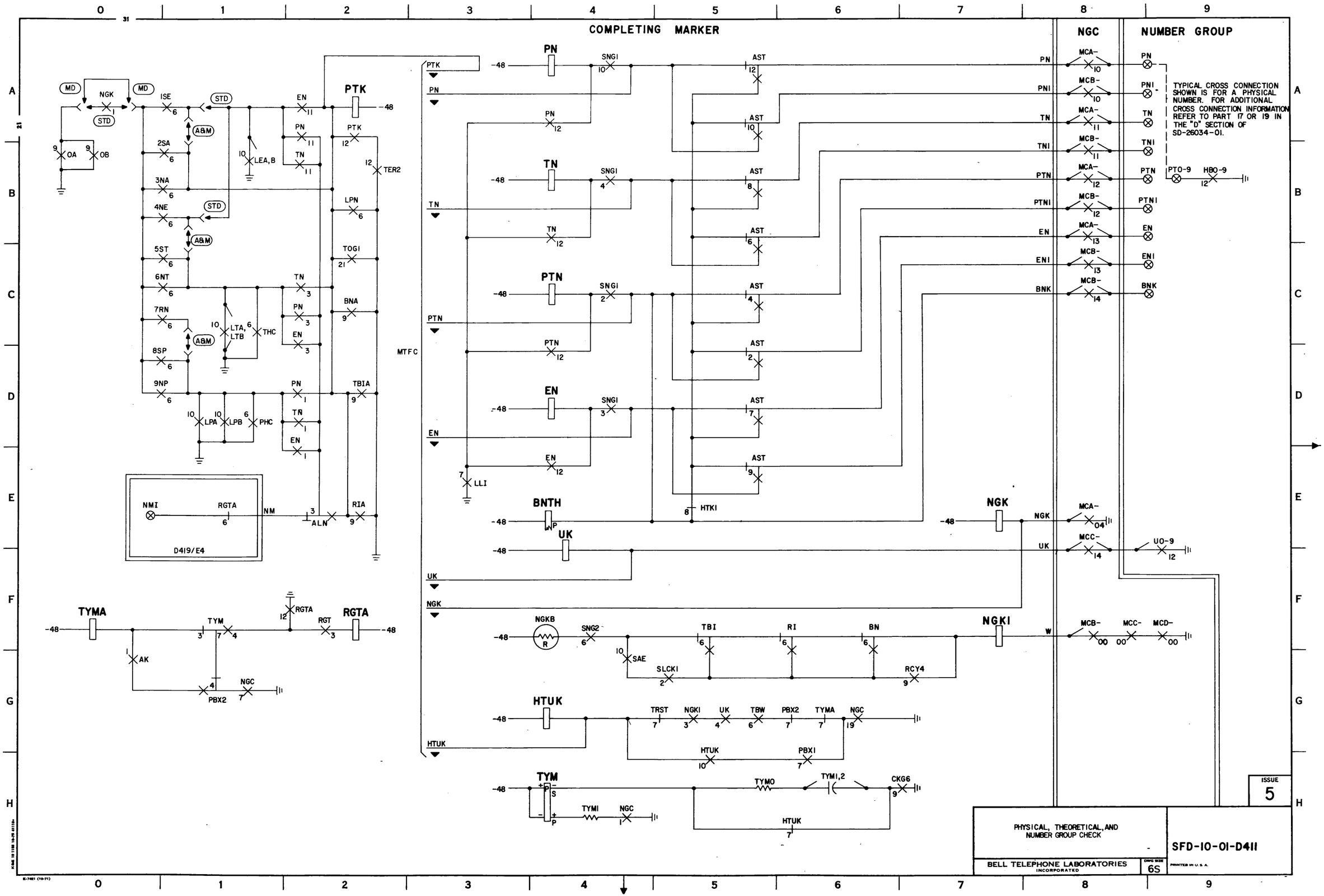

SFD-10-01-D411

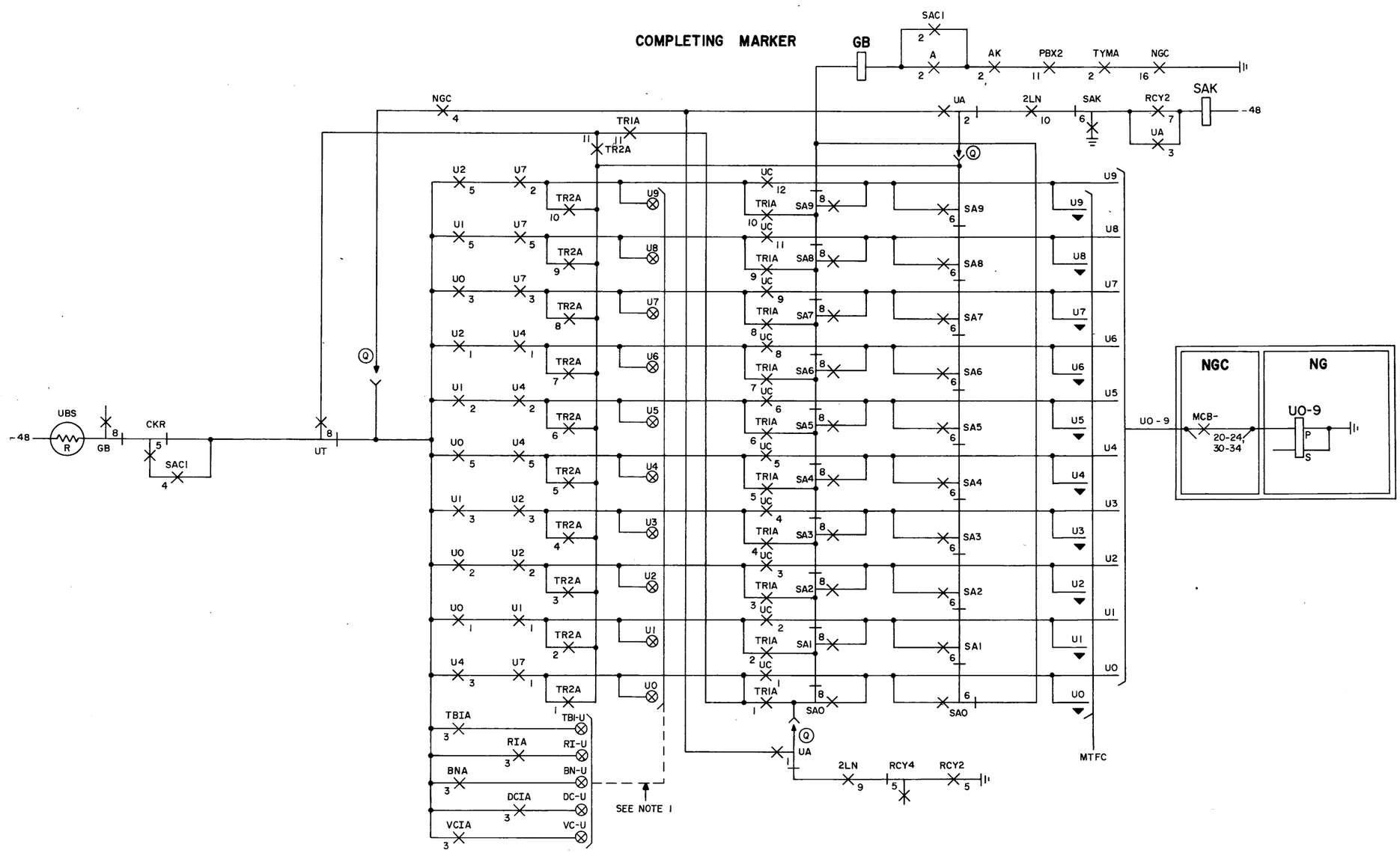

SHEET NOTES:

1. CROSS CONNECT PER OFFICE RECORD FOR ASSIGNMENT OF INTERCEPT TRUNK ON LINE LINK FRAME.
2. OPTION ASSIGNMENTS:

(Q) TWO LINE NUMBER FEATURE.

ISSUE 3

UNITS DIGIT CONTROL

SFD-10-01-D413

BELL TELEPHONE LABORATORIES INCORPORATED

DWG SIZE 6S

PRINTED IN U. S. A.

E-7421 (10-71)

SFD-10-01-D413

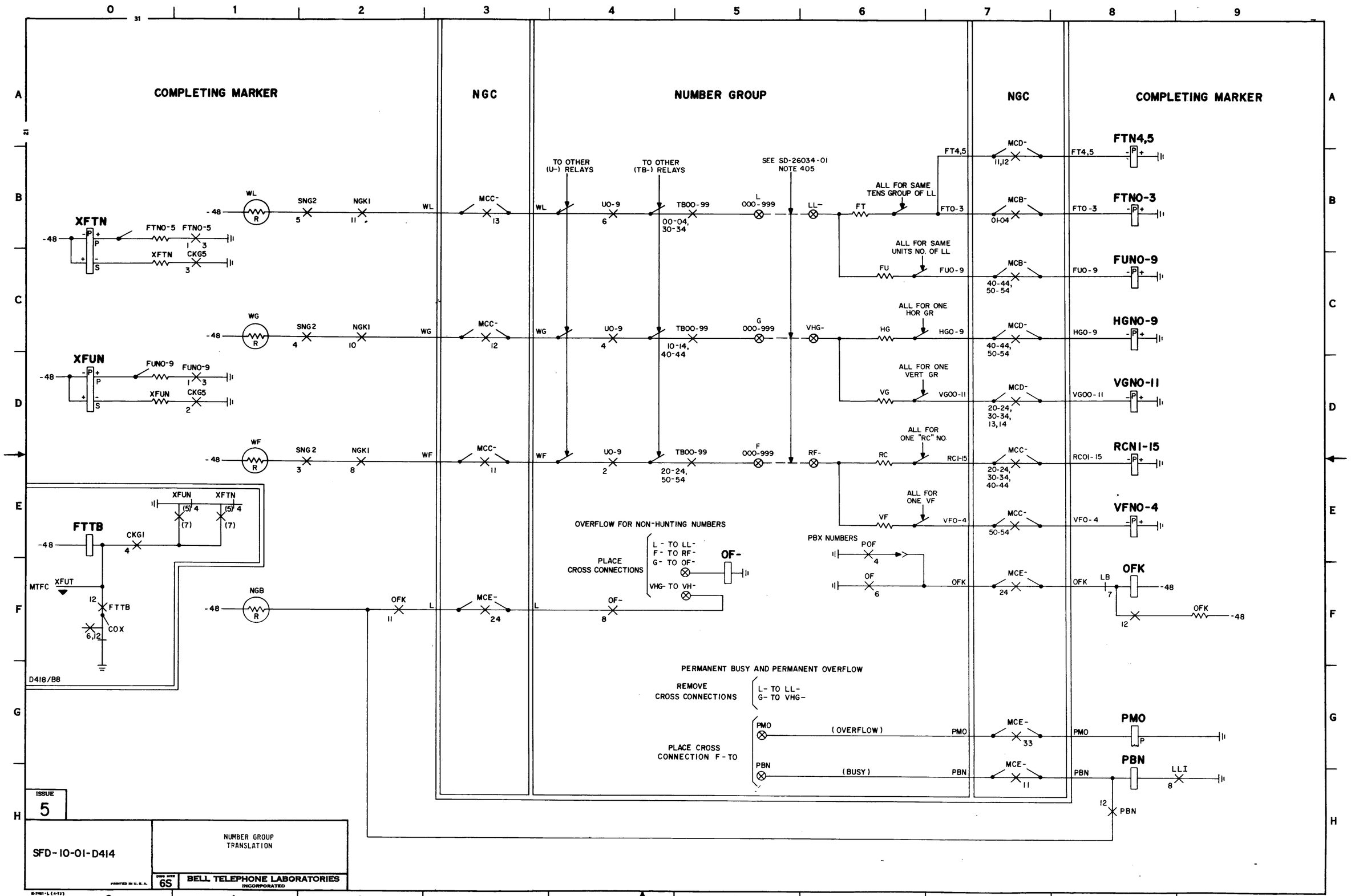

SFD-10-01-D414

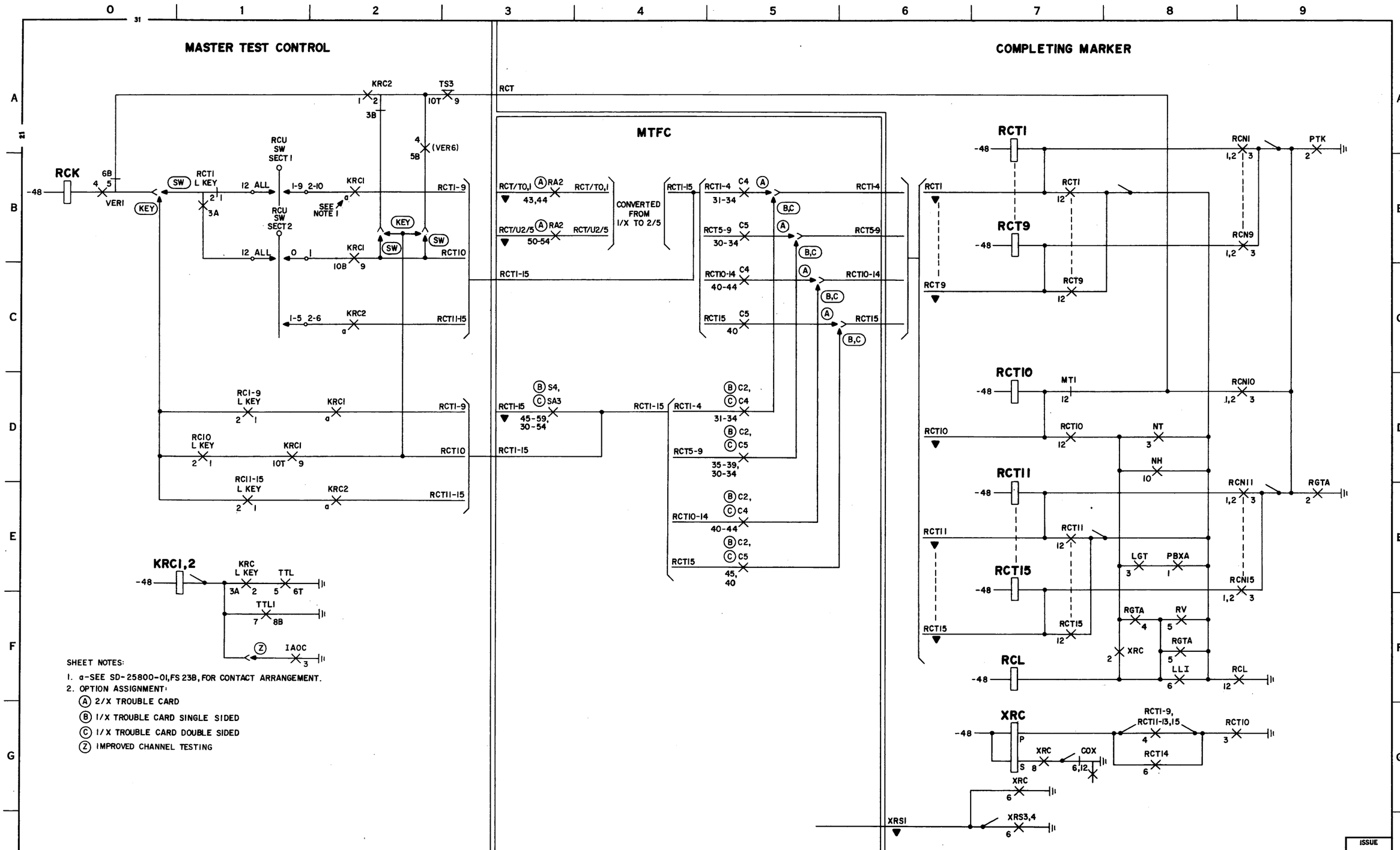

SFD-10-01-D415

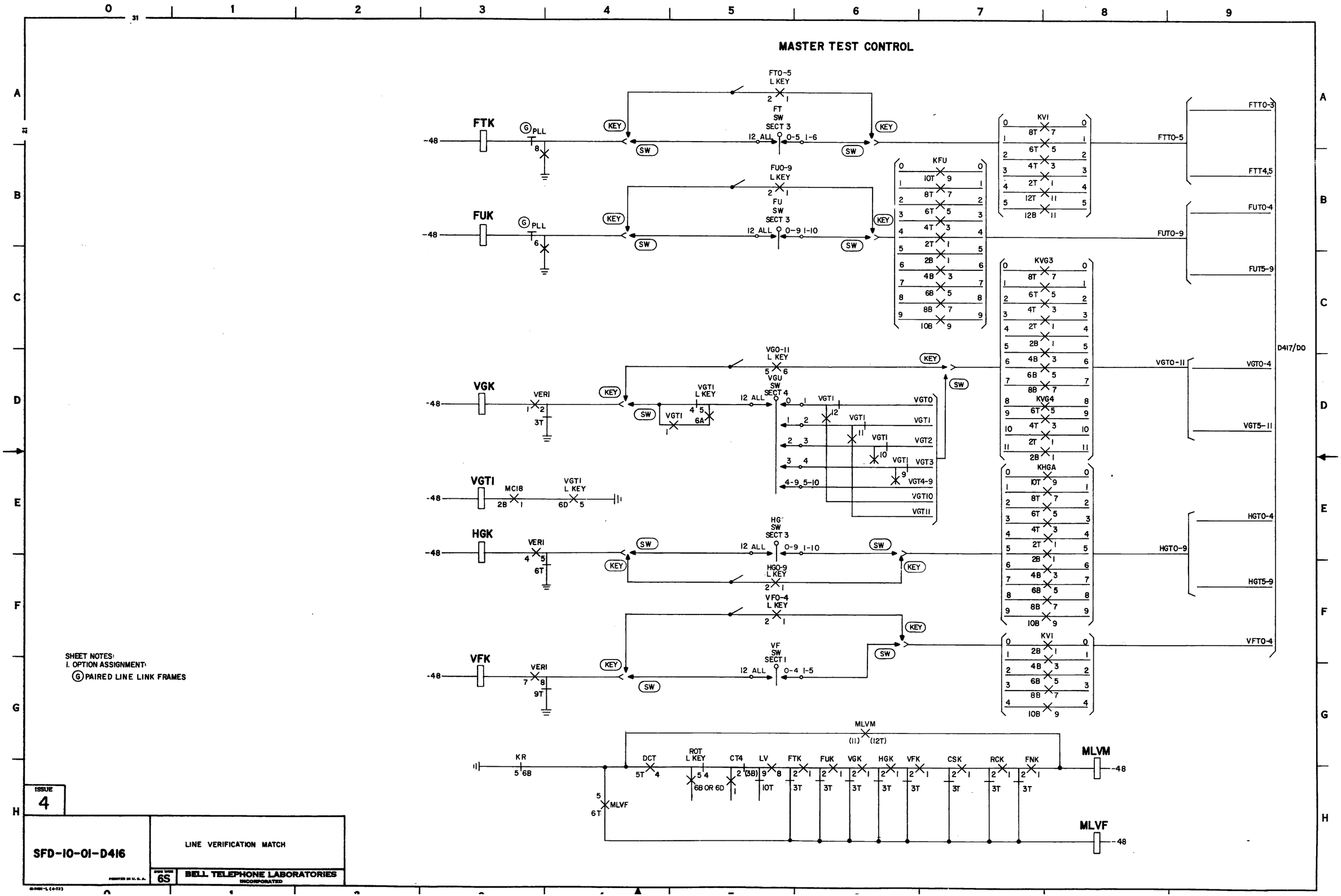

SFD-10-01-D416

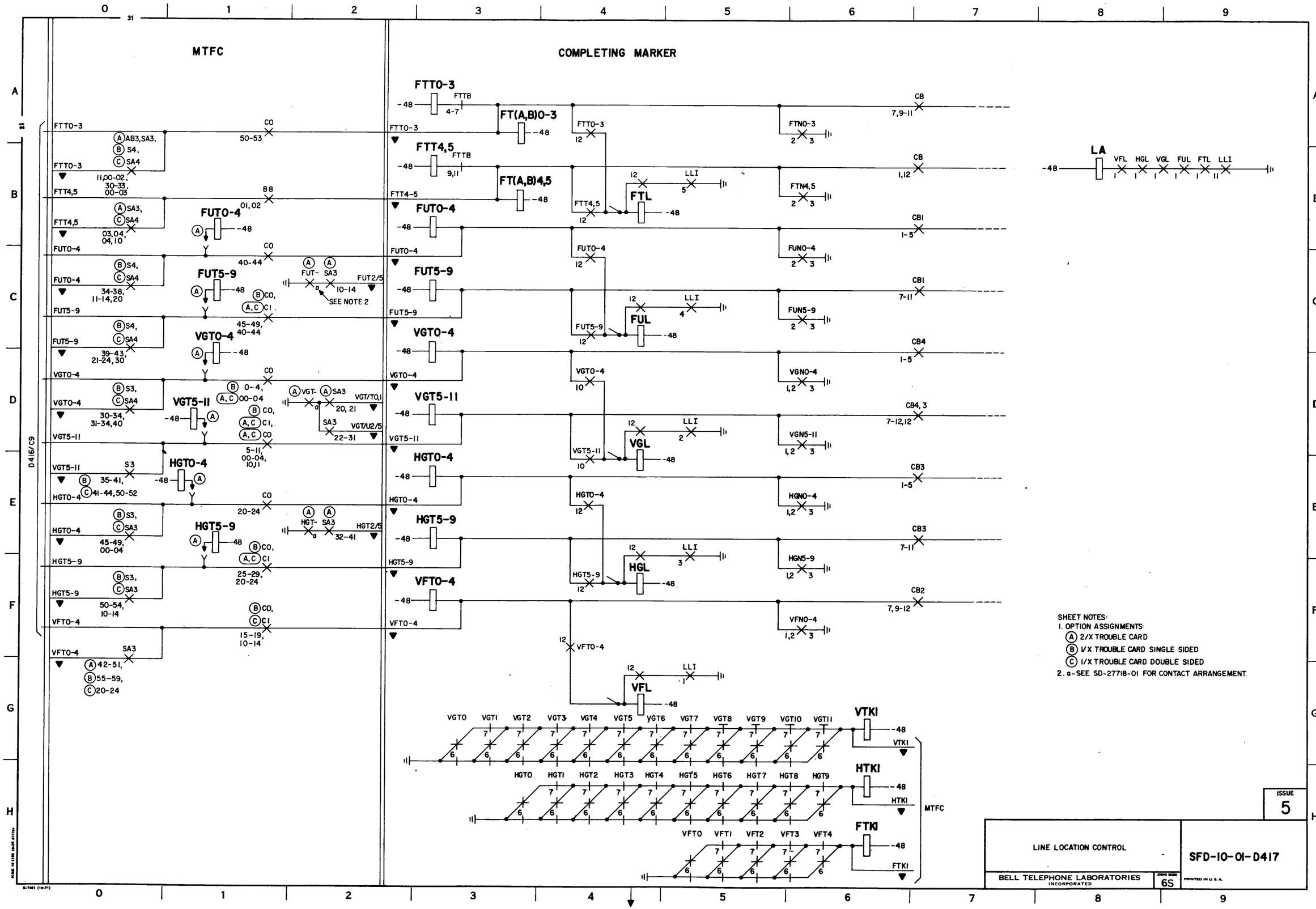

SFD-10-01-D417

COMPLETING MARKER

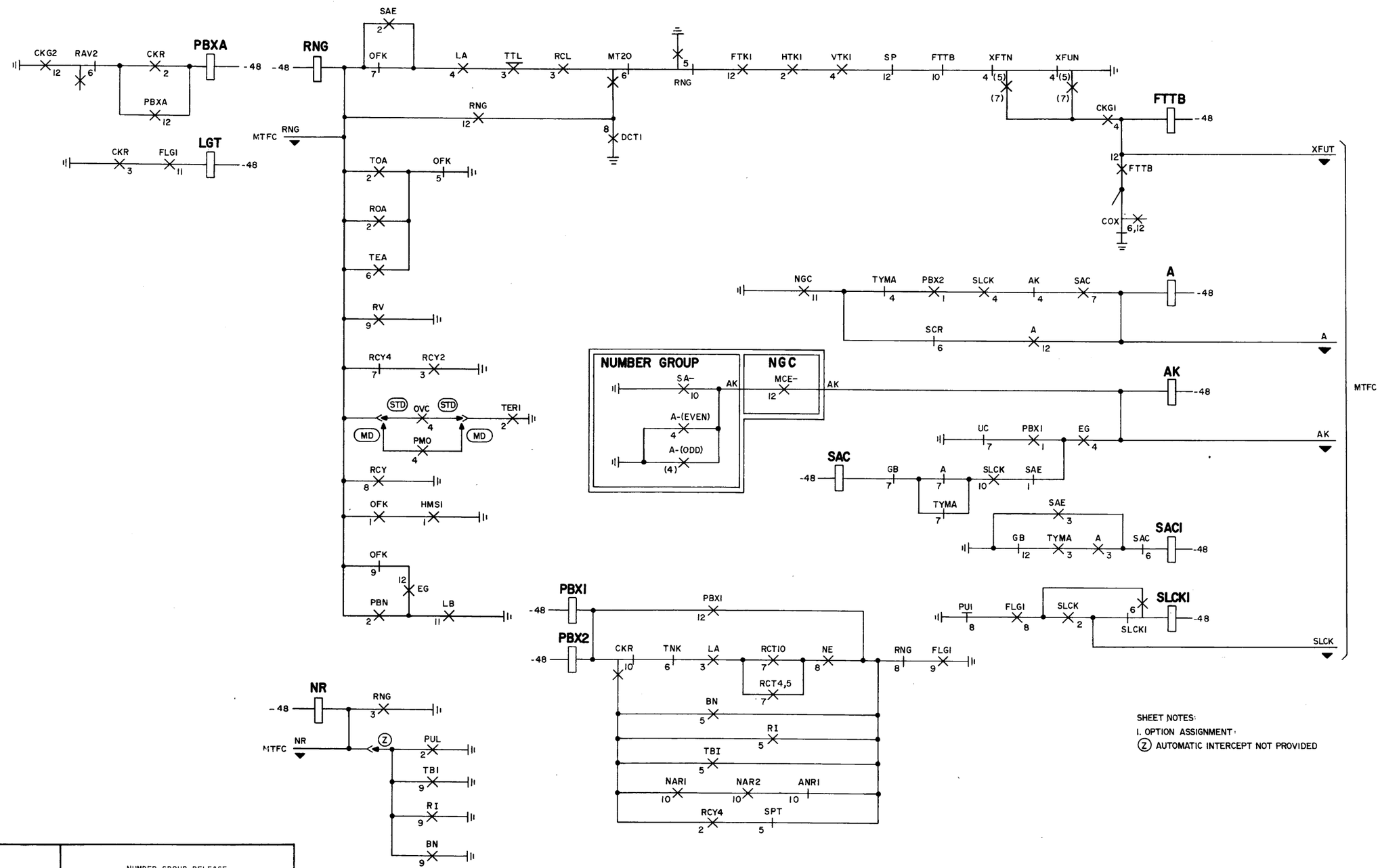

SHEET NOTES:
1. OPTION ASSIGNMENT:
(Z) AUTOMATIC INTERCEPT NOT PROVIDED

ISSUE 3

SFD-10-01-D418

NUMBER GROUP RELEASE CONTROL

DWG SIZE 6S

BELL TELEPHONE LABORATORIES INCORPORATED

PRINTED IN U.S.A.

SFD-10-01-D418

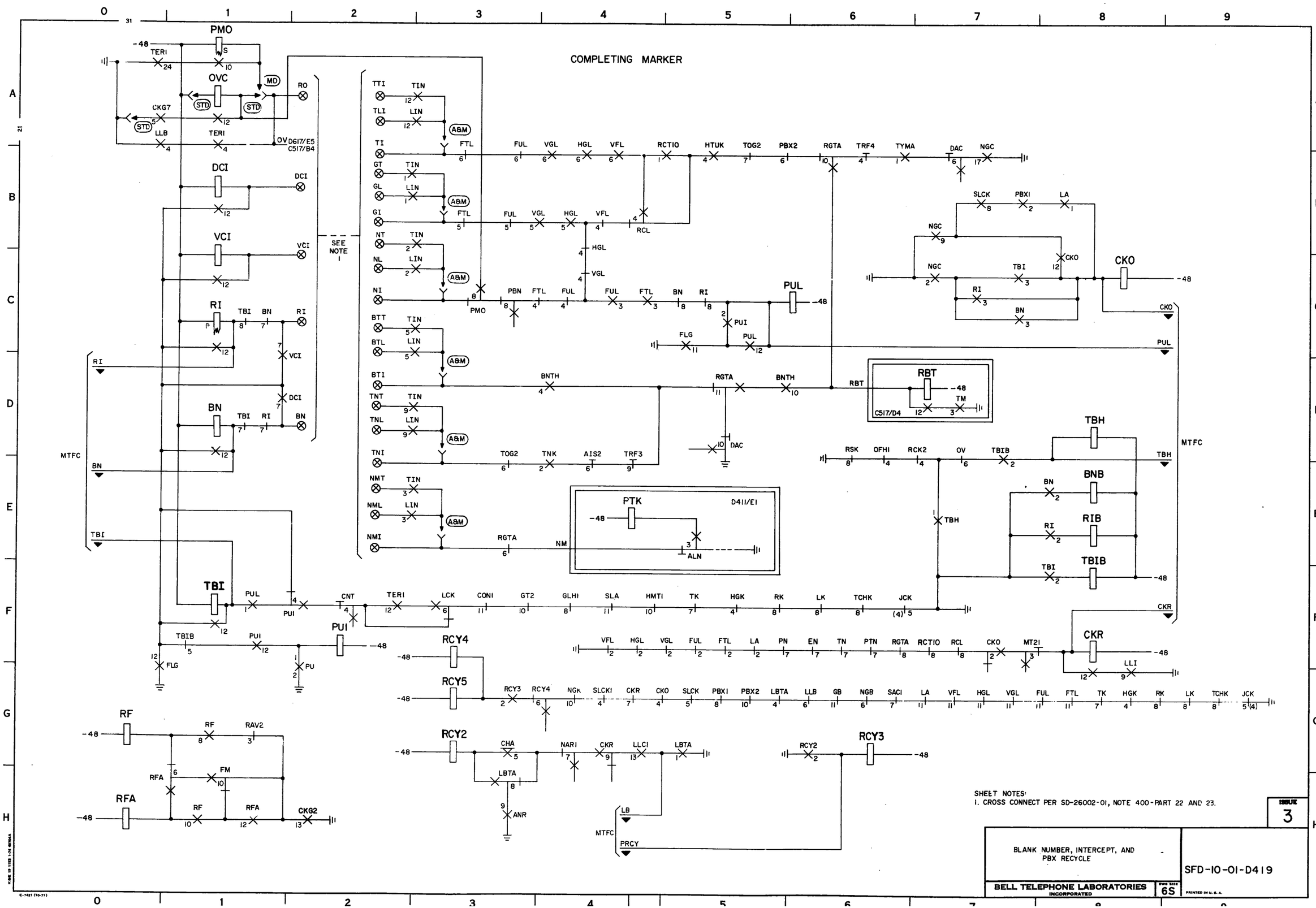

SFD-10-01-D419

COMPLETING MARKER

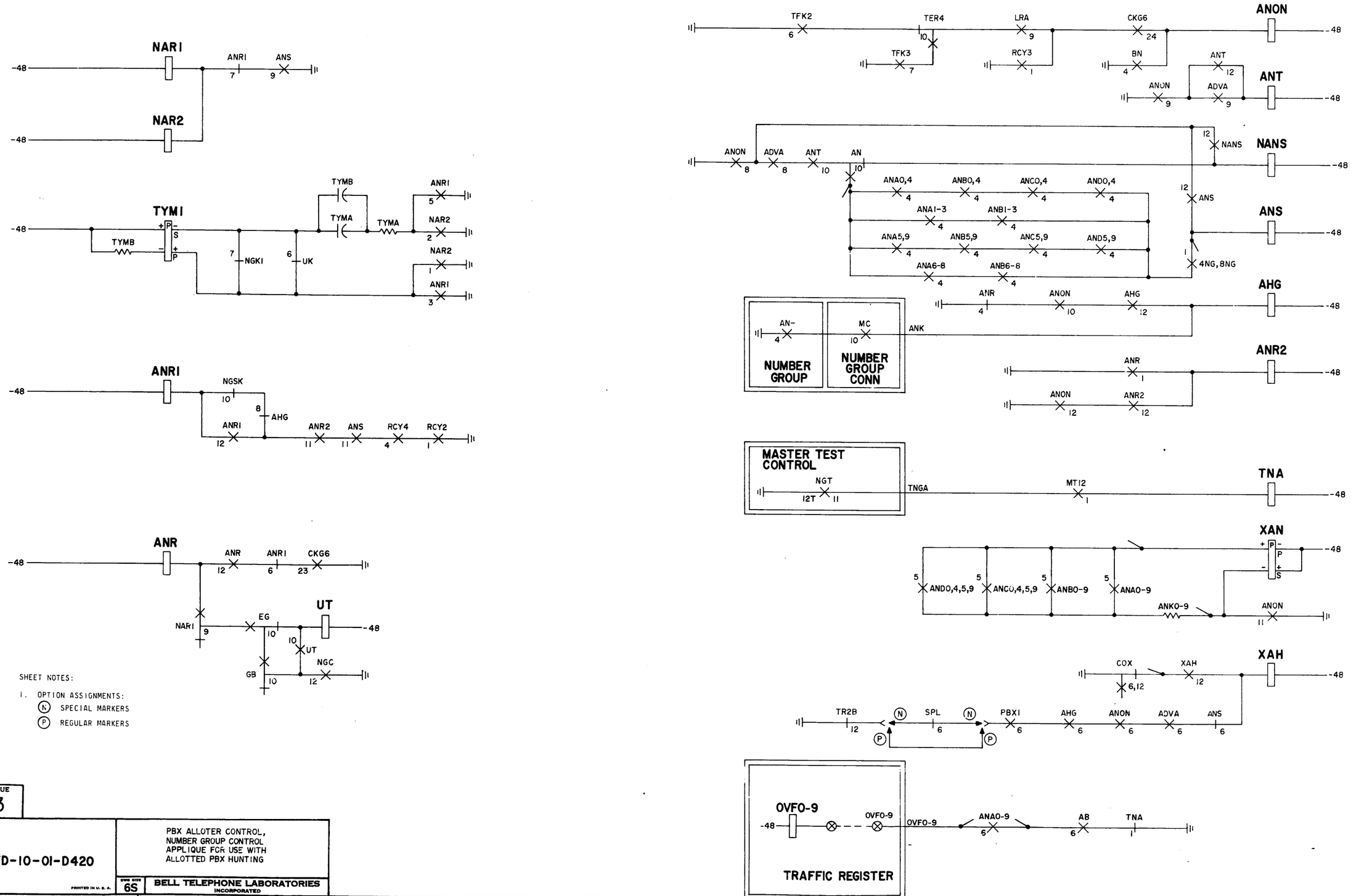

SHEET NOTES:

1. OPTION ASSIGNMENTS:
   - (N) SPECIAL MARKERS
   - (P) REGULAR MARKERS

ISSUE 3

SFD-10-01-D420

PBX ALLOTER CONTROL, NUMBER GROUP CONTROL APPLIQUE FOR USE WITH ALLOTTED PBX HUNTING

DWG SIZE 6S

BELL TELEPHONE LABORATORIES INCORPORATED

PRINTED IN U. S. A.

SFD-10-01-D420

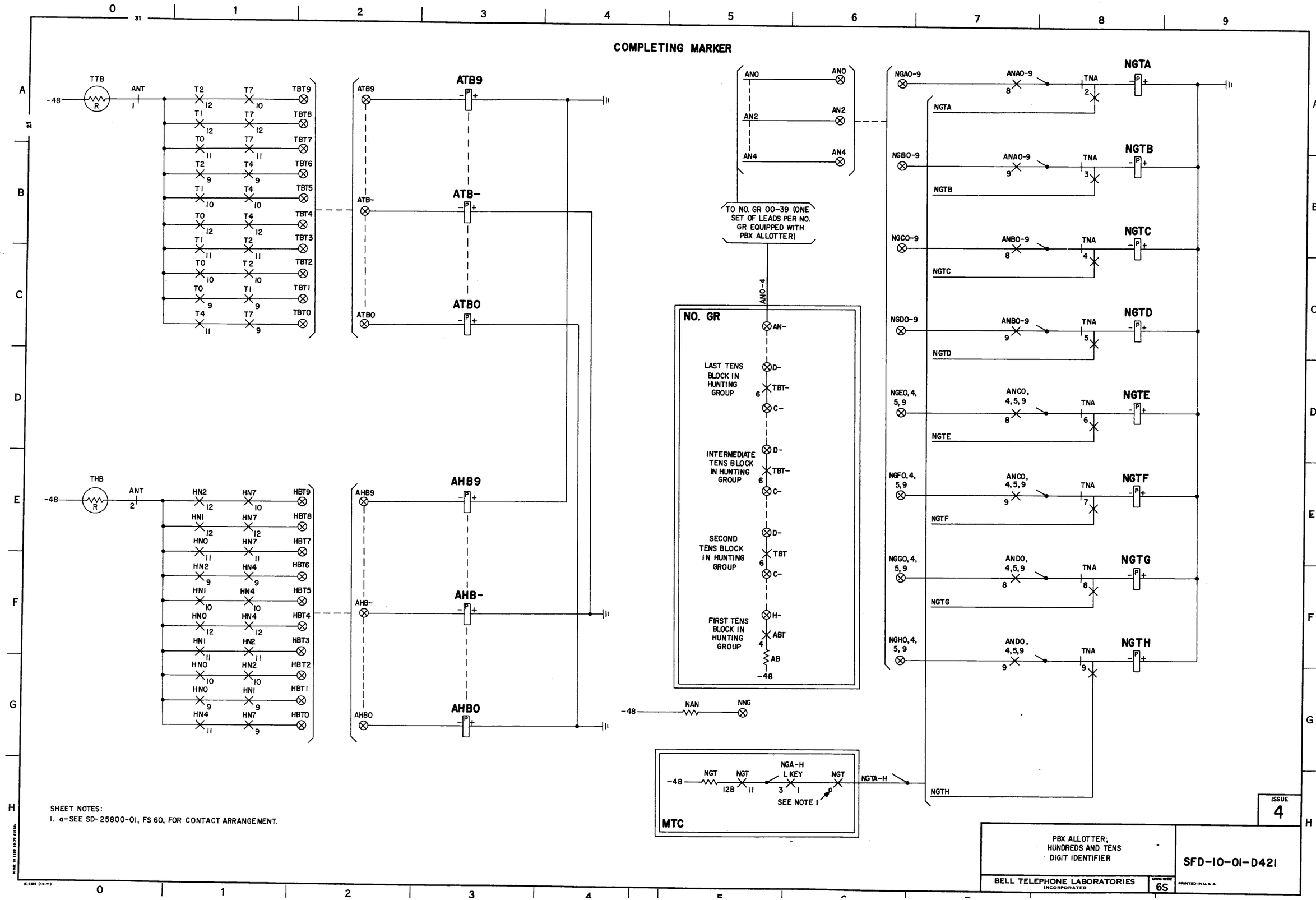
COMPLETING MARKER
TTB
-48
R
ANT
1
T2 12
T7 10
TBT9
T1 12
T7 12
TBT8
T0 11
T7 11
TBT7
T2 9
T4 9
TBT6
T1 10
T4 10
TBT5
T0 12
T4 12
TBT4
T1 11
T2 11
TBT3
T0 10
T2 10
TBT2
T0 9
T1 9
TBT1
T4 11
T7 9
TBT0
ATB9
ATB-
ATBO
THB
2
HN2 12
HN7 10
HBT9
HN1 12
HN7 12
HBT8
HN0 11
HN7 11
HBT7
HN2 9
HN4 9
HBT6
HN1 10
HN4 10
HBT5
HN0 12
HN4 12
HBT4
HN1 11
HN2 11
HBT3
HN0 10
HN2 10
HBT2
HN0 9
HN1 9
HBT1
HN4 11
HN7 9
HBT0
AHB9
AHB-
AHBO
ANO
AN2
AN4
TO NO. GR 00-39 (ONE SET OF LEADS PER NO. GR EQUIPPED WITH PBX ALLOTTER)
ANO-4
NO. GR
AN-
LAST TENS BLOCK IN HUNTING GROUP
D-
TBT-
C-
INTERMEDIATE TENS BLOCK IN HUNTING GROUP
SECOND TENS BLOCK IN HUNTING GROUP
TBT
FIRST TENS BLOCK IN HUNTING GROUP
H-
ABT
AB
NAN
NNG
NGAO-9
ANAO-9 8
TNA 2
NGTA
NGBO-9
ANAO-9 9
TNA 3
NGTB
NGCO-9
ANBO-9 8
TNA 4
NGTC
NGDO-9
ANBO-9 9
TNA 5
NGTD
NGEO, 4, 5, 9
ANCO, 4, 5, 9 8
TNA 6
NGTE
NGFO, 4, 5, 9
ANCO, 4, 5, 9 9
TNA 7
NGTF
NGGO, 4, 5, 9
ANDO, 4, 5, 9 8
TNA 8
NGTG
NGHO, 4, 5, 9
ANDO, 4, 5, 9 9
TNA 9
NGTH
NGTA
NGTB
NGTC
NGTD
NGTE
NGTF
NGTG
NGTH
NGT
12B
NGA-H
L KEY
3
1
SEE NOTE 1
NGTA-H
MTC
SHEET NOTES:
1. a-SEE SD-25800-01, FS 60, FOR CONTACT ARRANGEMENT.
ISSUE 4
PBX ALLOTTER; HUNDREDS AND TENS DIGIT IDENTIFIER
SFD-10-01-D421
BELL TELEPHONE LABORATORIES INCORPORATED
DWG SIZE 6S
PRINTED IN U.S.A.
E-7421 (10-71)
SFD-10-01-D421

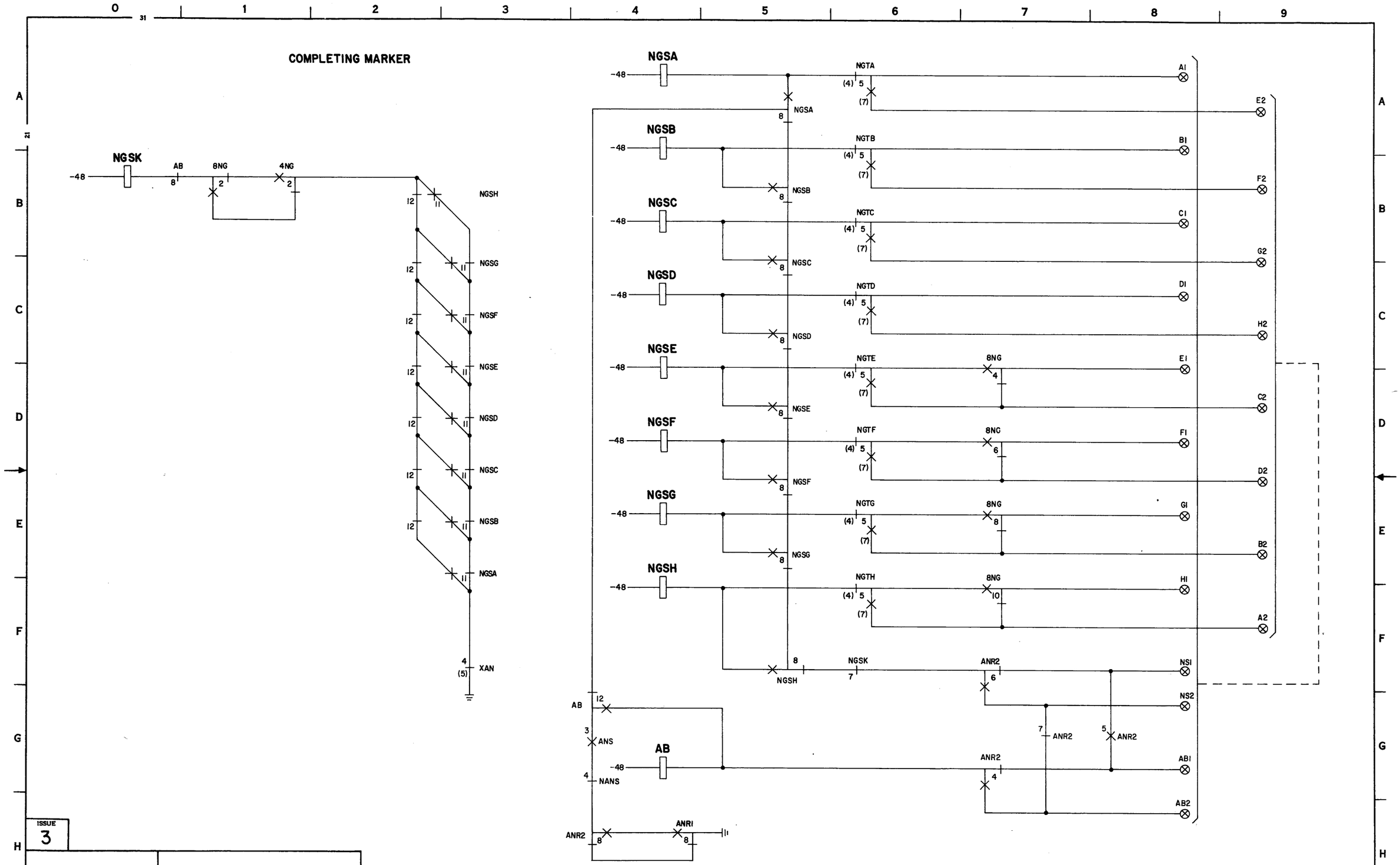

ISSUE 3

SFD-10-01-D422

PBX ALLOTTER;
NUMBER GROUP SELECTION

DWG SIZE 6S

BELL TELEPHONE LABORATORIES
INCORPORATED

PRINTED IN U. S. A.

E-74811-L (4-73)

SFD-10-01-D422

COMPLETING MARKER

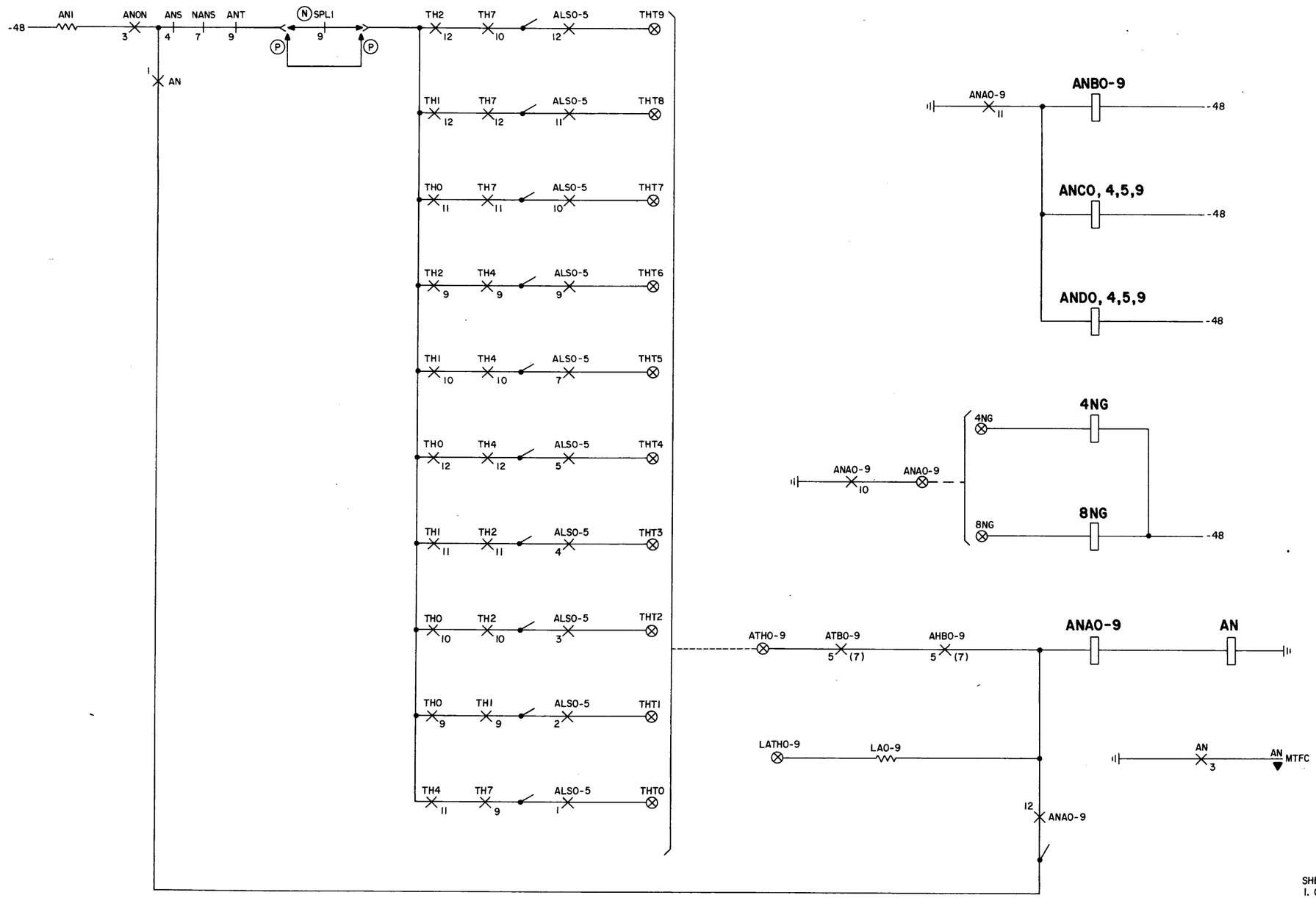

SHEET NOTES:
1. OPTION ASSIGNMENT:
   (N) SPECIAL MARKERS
   (P) REGULAR MARKERS

ISSUE 3

PBX ALLOTTER; THOUSANDS DIGIT IDENTIFER

SFD-10-01-D423

BELL TELEPHONE LABORATORIES INCORPORATED

DWG SIZE 6S

PRINTED IN U.S.A.

SFD-10-01-D423

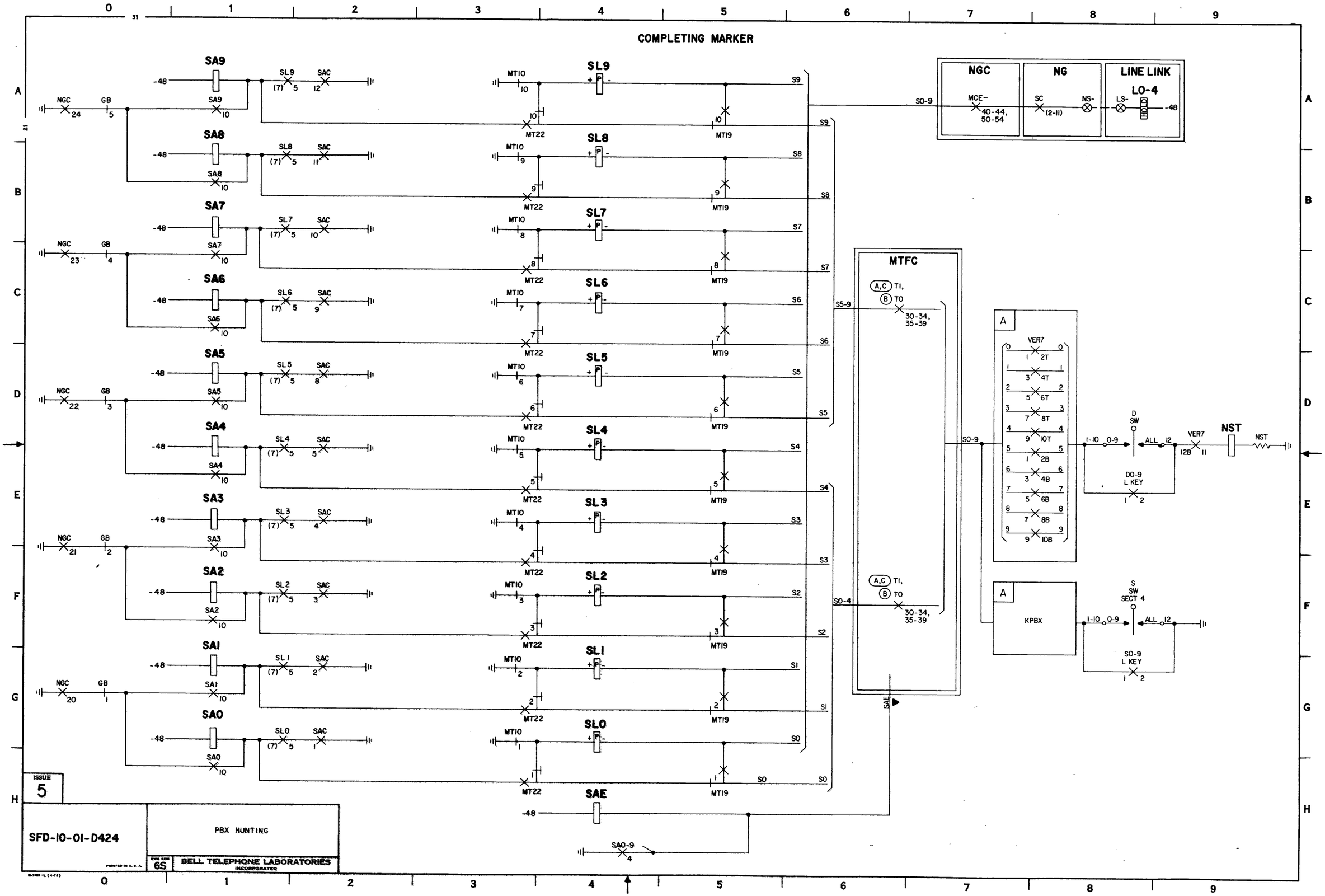

SFD-10-01-D424

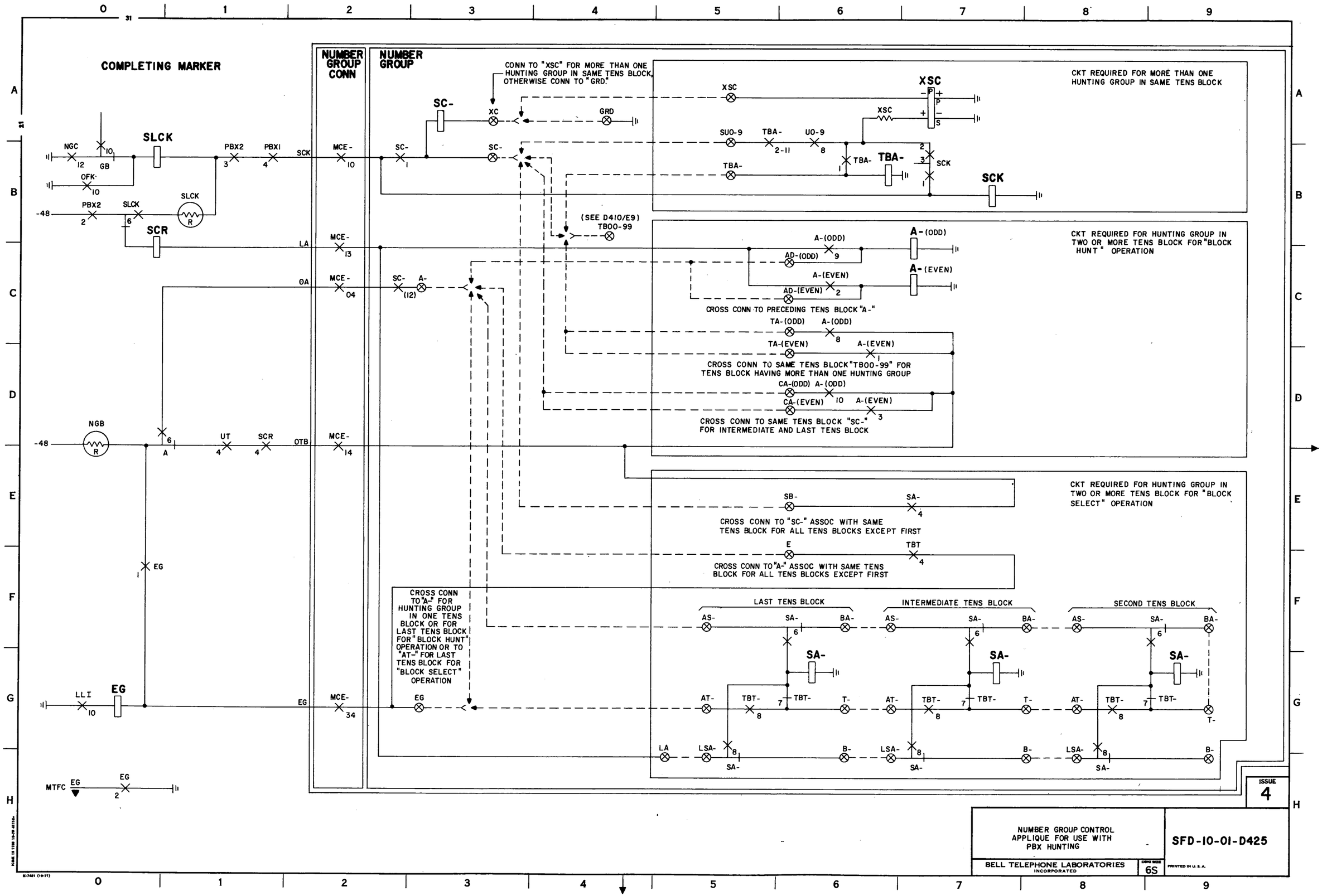

SFD-10-01-D425

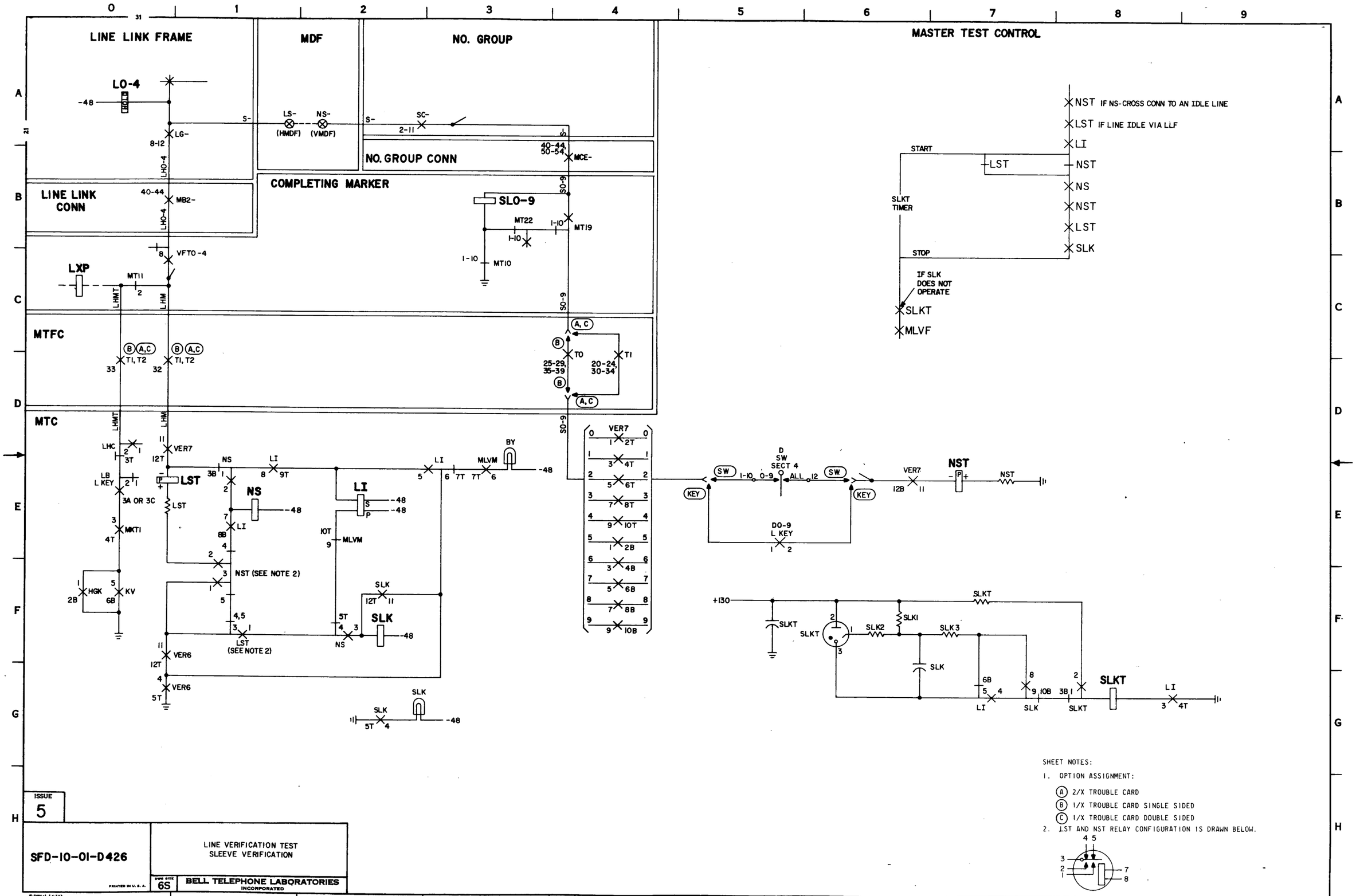
LINE LINK FRAME
MDF
NO. GROUP
MASTER TEST CONTROL
LO-4
-48
LG-
8-12
LHO-4
S-
LS-
NS-
(HMDF)
(VMDF)
SC-
2-11
NO. GROUP CONN
40-44
50-54
MCE-
LINE LINK CONN
MB2-
COMPLETING MARKER
SLO-9
MT22
MT19
MT10
VFTO-4
LXP
MT11
LHMT
LHM
MTFC
T1, T2
T0
T1
25-29,
35-39
20-24,
30-34
MTC
VER7
LHC
LB
L KEY
3A OR 3C
MKT1
HGK
KV
LST
NS
LI
NST (SEE NOTE 2)
LST
(SEE NOTE 2)
VER6
MLVM
BY
SLK
SW
KEY
D
SW
SECT 4
ALL
DO-9
L KEY
NST
+130
SLKT
SLK1
SLK2
SLK3
START
STOP
SLKT
TIMER
NST IF NS-CROSS CONN TO AN IDLE LINE
LST IF LINE IDLE VIA LLF
LI
NST
NS
NST
LST
SLK
IF SLK
DOES NOT
OPERATE
SLKT
MLVF
SHEET NOTES:
1. OPTION ASSIGNMENT:
A 2/X TROUBLE CARD
B 1/X TROUBLE CARD SINGLE SIDED
C 1/X TROUBLE CARD DOUBLE SIDED
2. LST AND NST RELAY CONFIGURATION IS DRAWN BELOW.
ISSUE
5
SFD-10-01-D426
LINE VERIFICATION TEST
SLEEVE VERIFICATION
DWG SIZE
6S
BELL TELEPHONE LABORATORIES
INCORPORATED
PRINTED IN U. S. A.
SFD-10-01-D426

ESTABLISHING INCOMING TRUNK CONNECTION

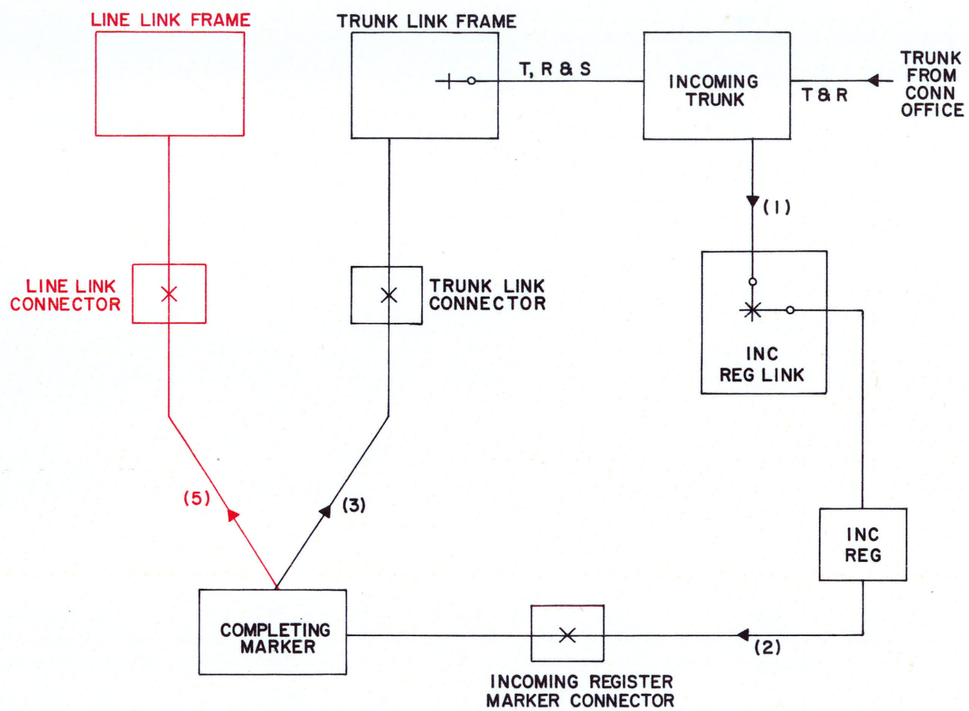

INDEX

CAUTION!

DUE TO THE SIMPLIFIED NATURE OF THIS DOCUMENT, INFORMATION SHOWN MAY NOT BE COMPLETE.

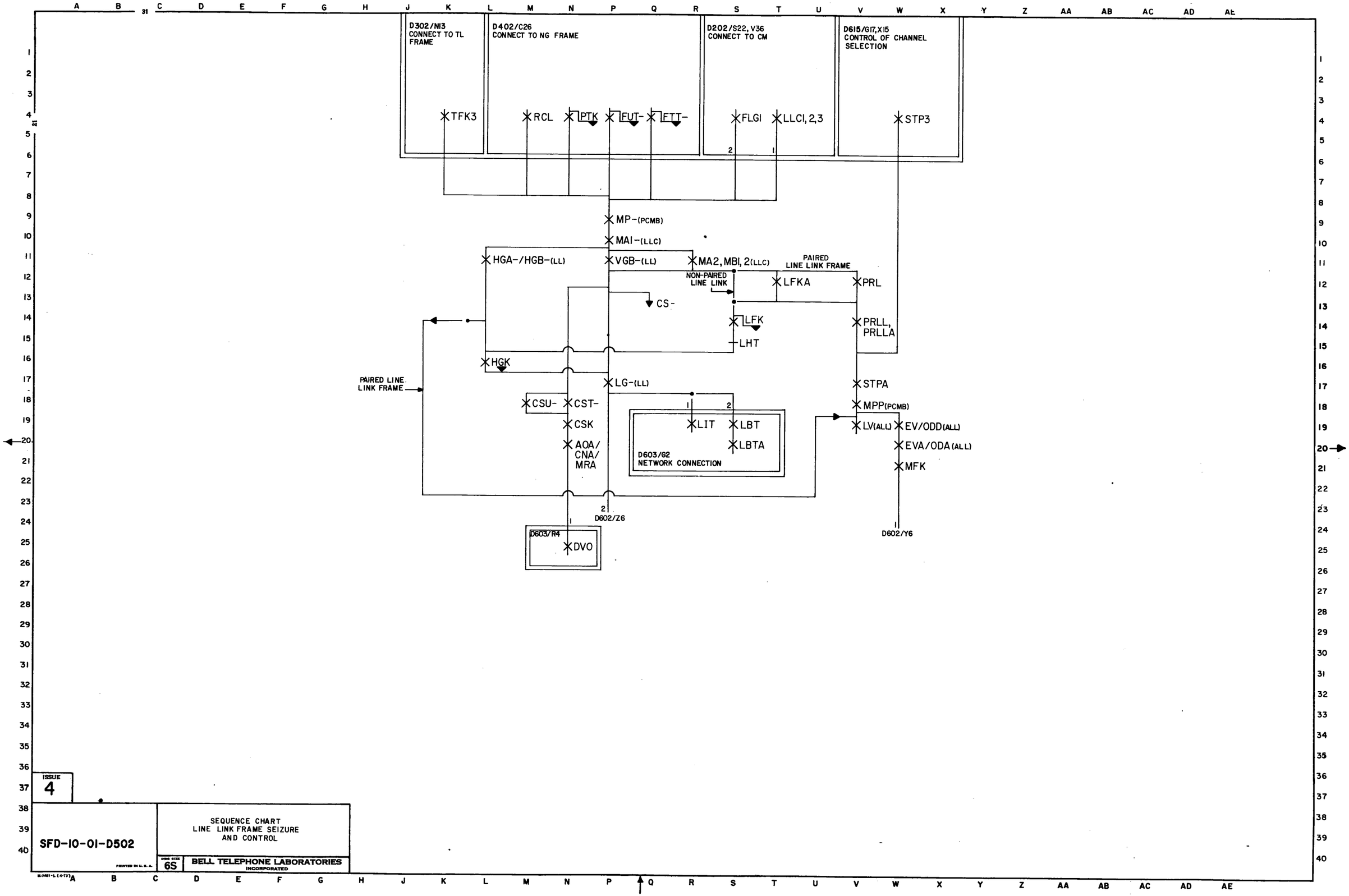

ISSUE
4

SFD-10-01-D502

SEQUENCE CHART
LINE LINK FRAME SEIZURE
AND CONTROL

SYMB SIZE 6S

BELL TELEPHONE LABORATORIES
INCORPORATED

PRINTED IN U. S. A.

SFD-10-01-D502

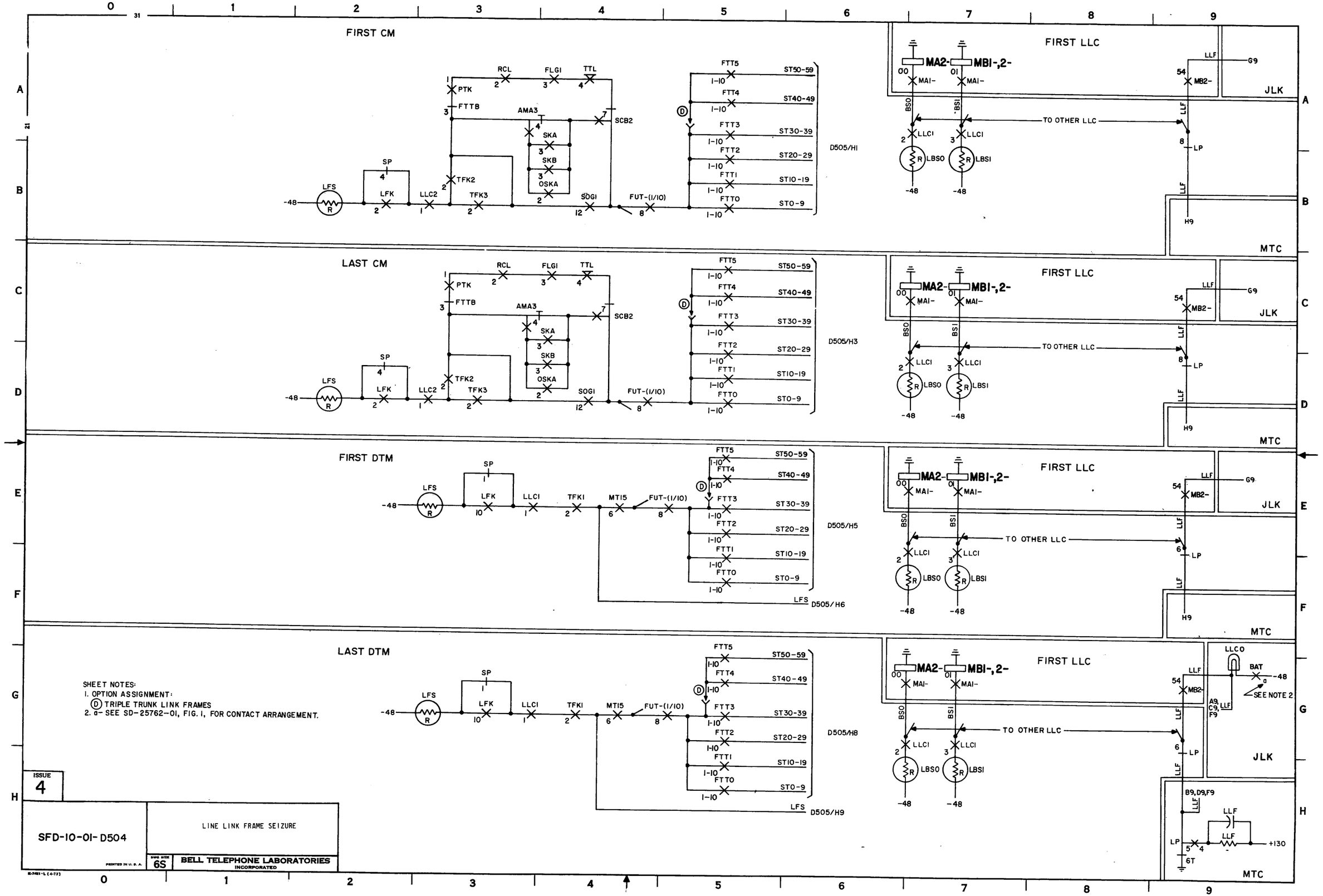
FIRST CM
LAST CM
FIRST DTM
LAST DTM
FIRST LLC
JLK
MTC
TO OTHER LLC
D505/H1
D505/H3
D505/H5
D505/H6
D505/H8
D505/H9
SHEET NOTES:
1. OPTION ASSIGNMENT:
(D) TRIPLE TRUNK LINK FRAMES
2. a- SEE SD-25762-01, FIG. 1, FOR CONTACT ARRANGEMENT.
SEE NOTE 2
ISSUE 4
SFD-10-01-D504
LINE LINK FRAME SEIZURE
BELL TELEPHONE LABORATORIES INCORPORATED
DWG SIZE 6S
PRINTED IN U.S.A.
SFD-10-01-D504

NOTES:

1. THIS DRAWING SHOWS ALL COMPLETING MARKERS FIRST AND ALL DIAL TONE MARKERS LAST. ACTUALLY, THE MARKERS MAY APPEAR IN ANY ORDER IN THE PREFERENCE CHAIN.
2. OPTION ASSIGNMENTS:
   (F) NON-PAIRED LINE LINK OPERATION.
   (G) PAIRED LINE LINK OPERATION.
3. a-SEE SD-95417-01, FS 4, FOR CONTACT ARRANGEMENT.
   b-SEE SD-26039-01, FS 2-4, FOR CONTACT ARRANGEMENT.

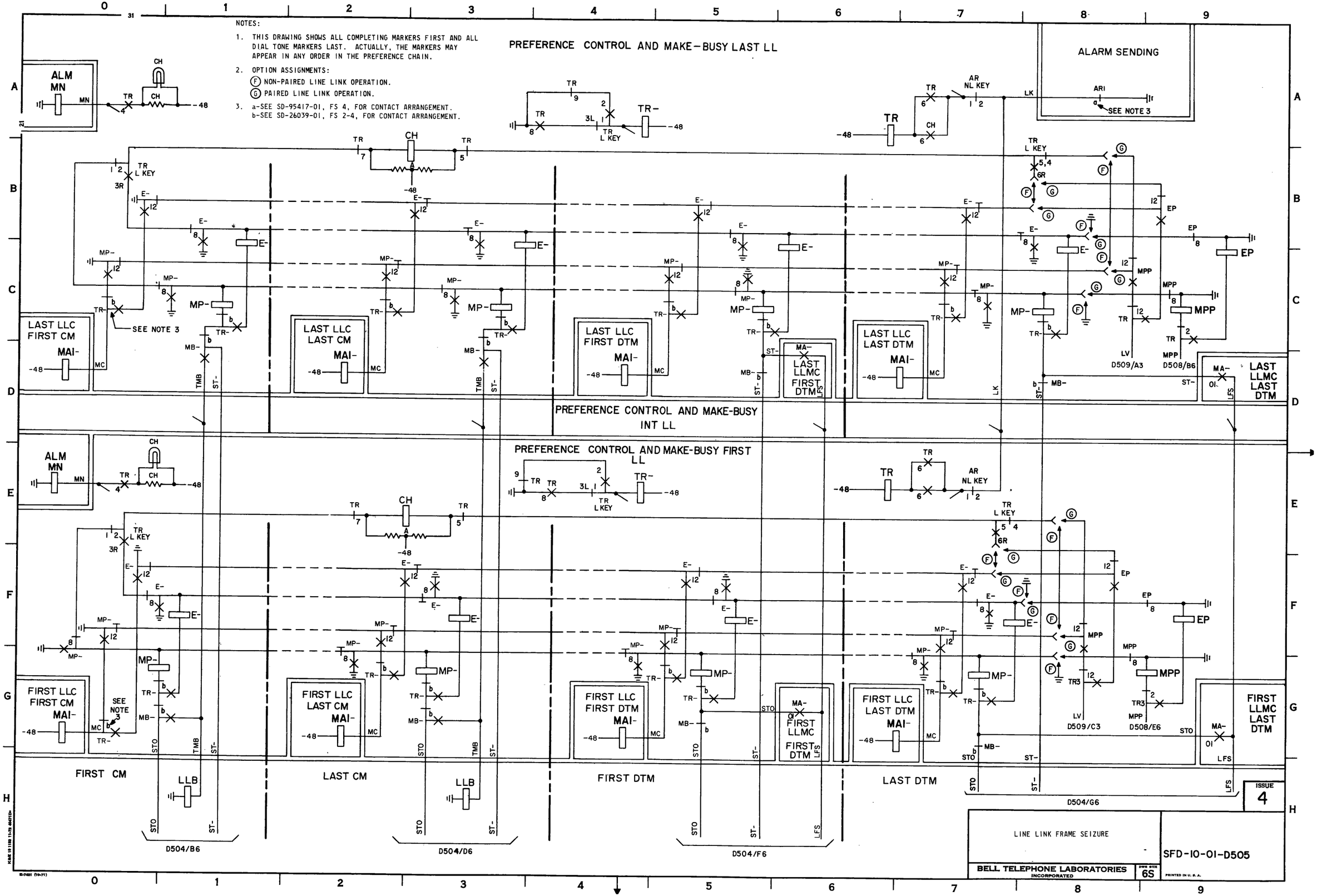

LINE LINK FRAME SEIZURE

BELL TELEPHONE LABORATORIES INCORPORATED

DWG SIZE 6S

SFD-10-01-D505

ISSUE 4

PRINTED IN U.S.A.

SFD-10-01-D505

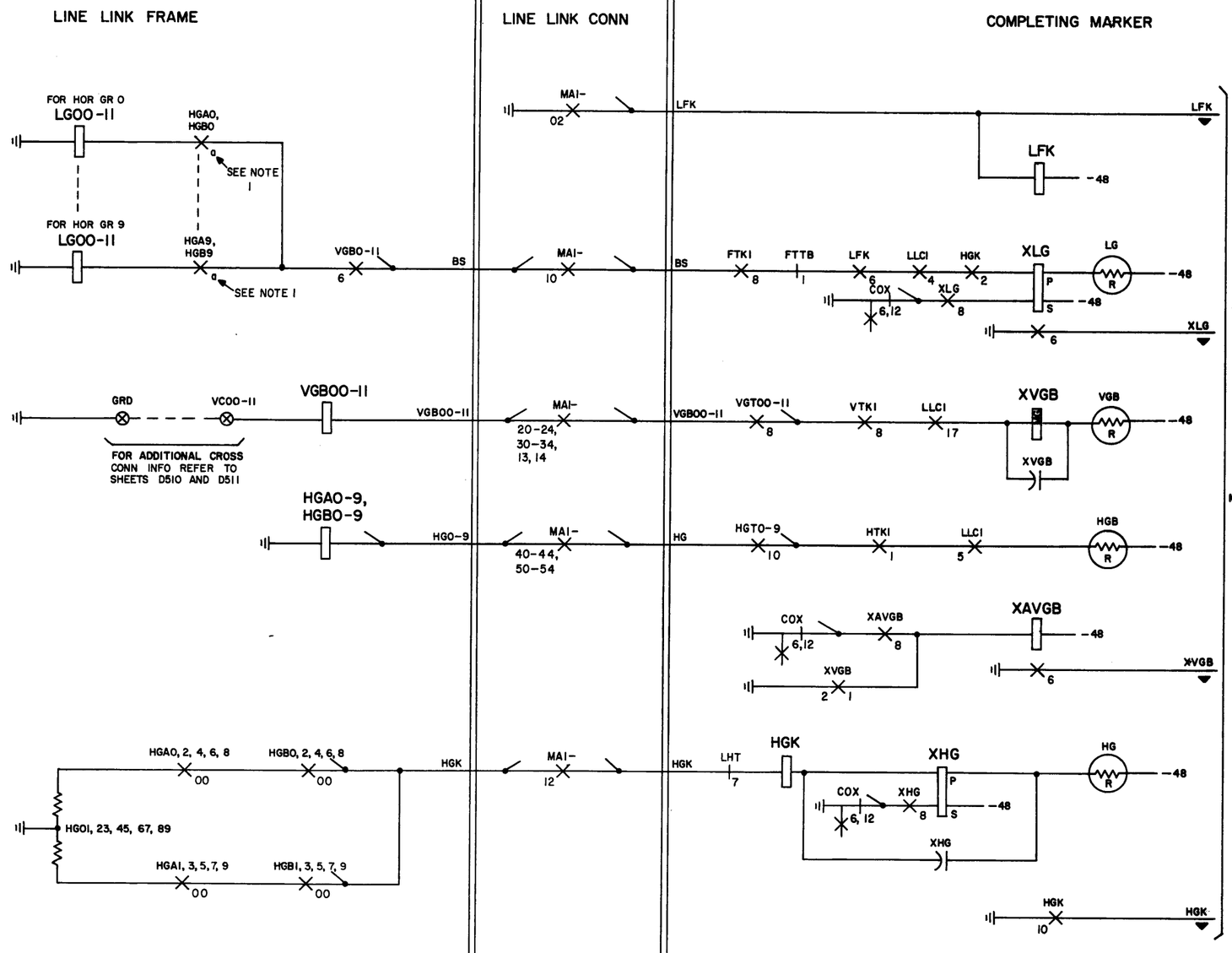

SHEET NOTES:
1. a- SEE SD-26030-01, FS 2, FOR CONTACT ARRANGMENTS.

LINE LINK FRAME CONTROLS NON-PAIRED OPERATION	SFD-10-01-D507
BELL TELEPHONE LABORATORIES INCORPORATED	6S

ISSUE 4

SFD-10-01-D507

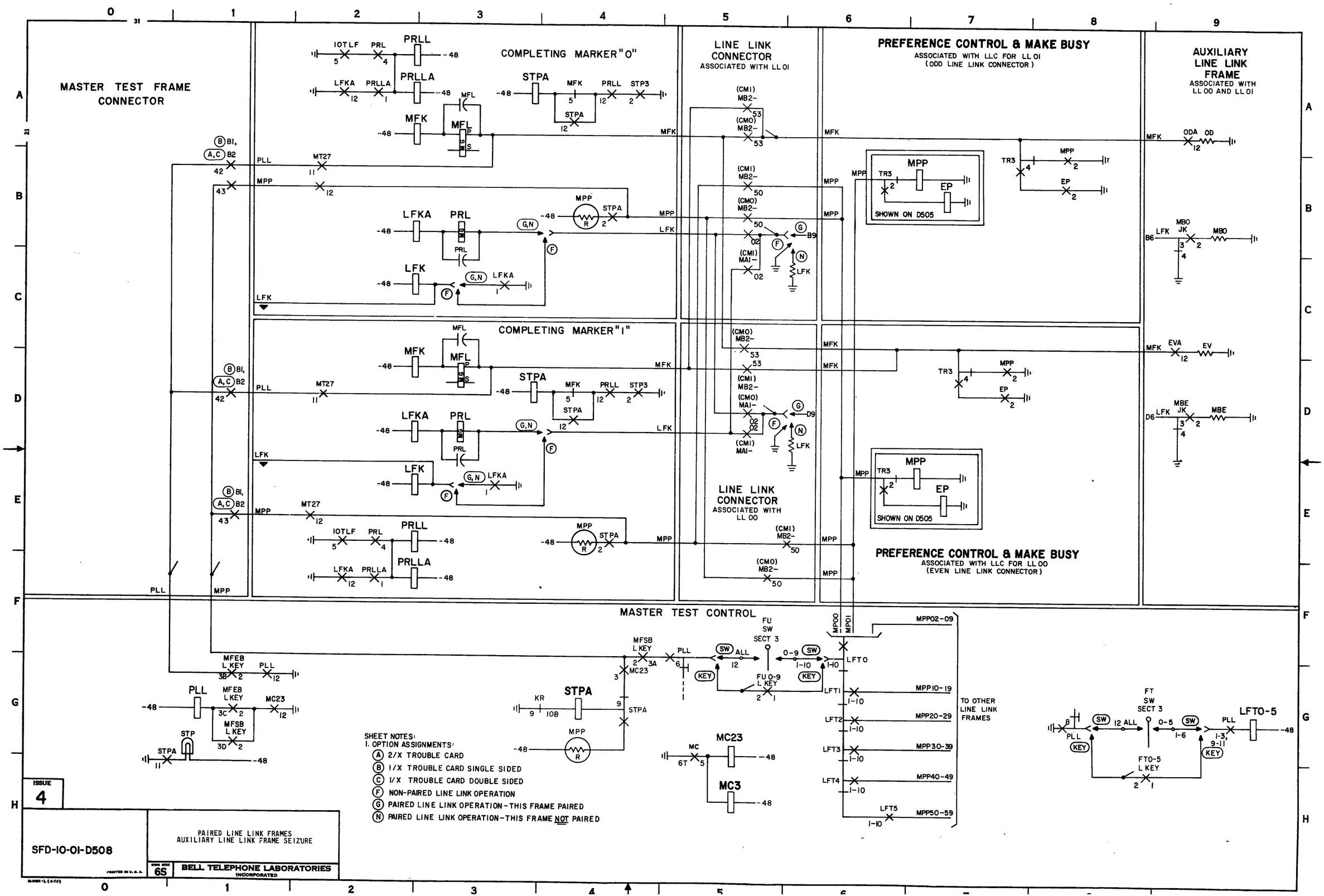
MASTER TEST FRAME CONNECTOR
COMPLETING MARKER "0"
COMPLETING MARKER "1"
LINE LINK CONNECTOR
ASSOCIATED WITH LL 01
LINE LINK CONNECTOR
ASSOCIATED WITH LL 00
PREFERENCE CONTROL & MAKE BUSY
ASSOCIATED WITH LLC FOR LL 01
(ODD LINE LINK CONNECTOR)
PREFERENCE CONTROL & MAKE BUSY
ASSOCIATED WITH LLC FOR LL 00
(EVEN LINE LINK CONNECTOR)
AUXILIARY LINE LINK FRAME
ASSOCIATED WITH LL 00 AND LL 01
SHOWN ON D505
MASTER TEST CONTROL
TO OTHER LINE LINK FRAMES
SHEET NOTES:
1. OPTION ASSIGNMENTS:
(A) 2/X TROUBLE CARD
(B) 1/X TROUBLE CARD SINGLE SIDED
(C) 1/X TROUBLE CARD DOUBLE SIDED
(F) NON-PAIRED LINE LINK OPERATION
(G) PAIRED LINE LINK OPERATION-THIS FRAME PAIRED
(N) PAIRED LINE LINK OPERATION-THIS FRAME NOT PAIRED
ISSUE 4
SFD-10-01-D508
PAIRED LINE LINK FRAMES
AUXILIARY LINE LINK FRAME SEIZURE
BELL TELEPHONE LABORATORIES
INCORPORATED
SFD-10-01-D508

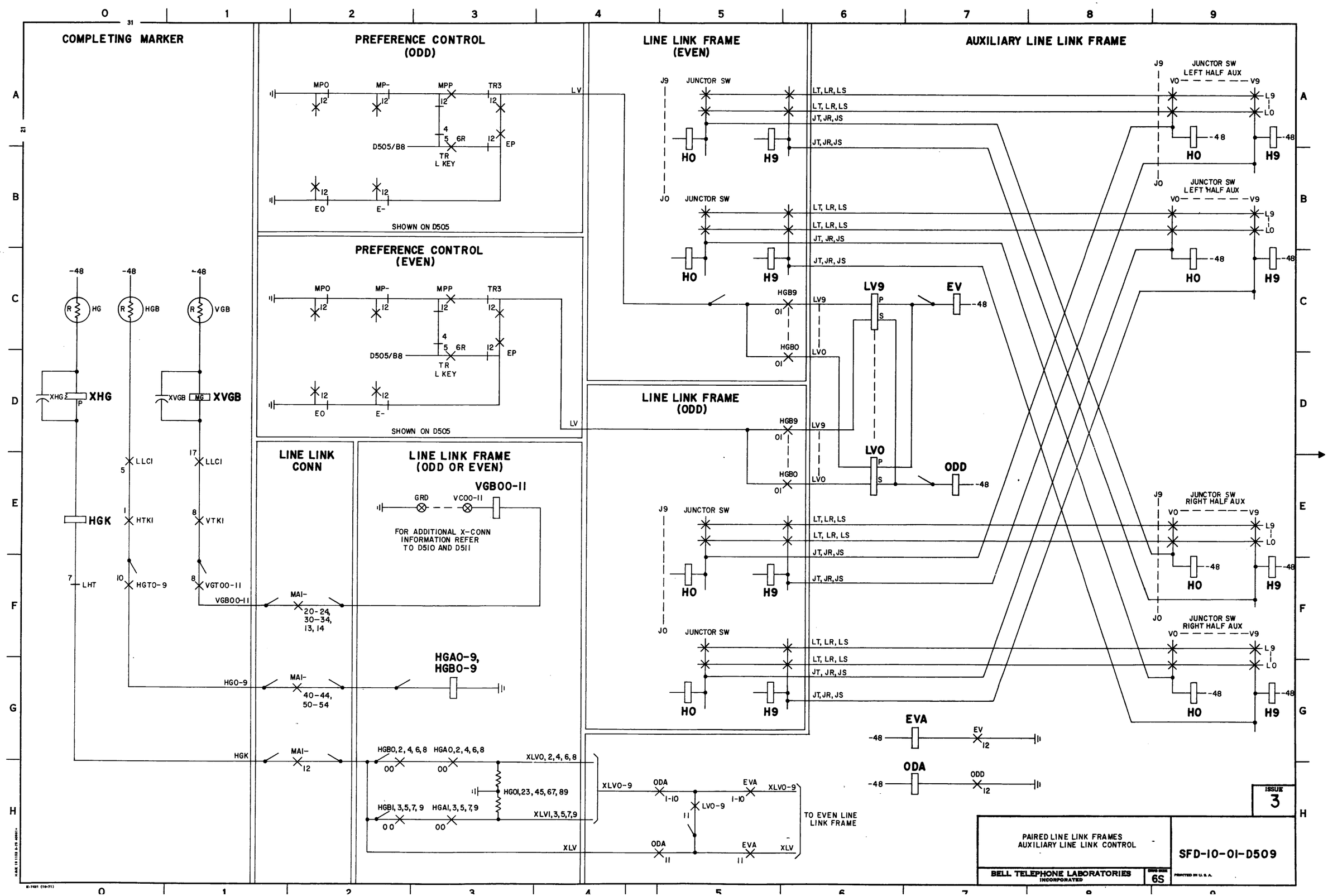

SFD-10-01-D509

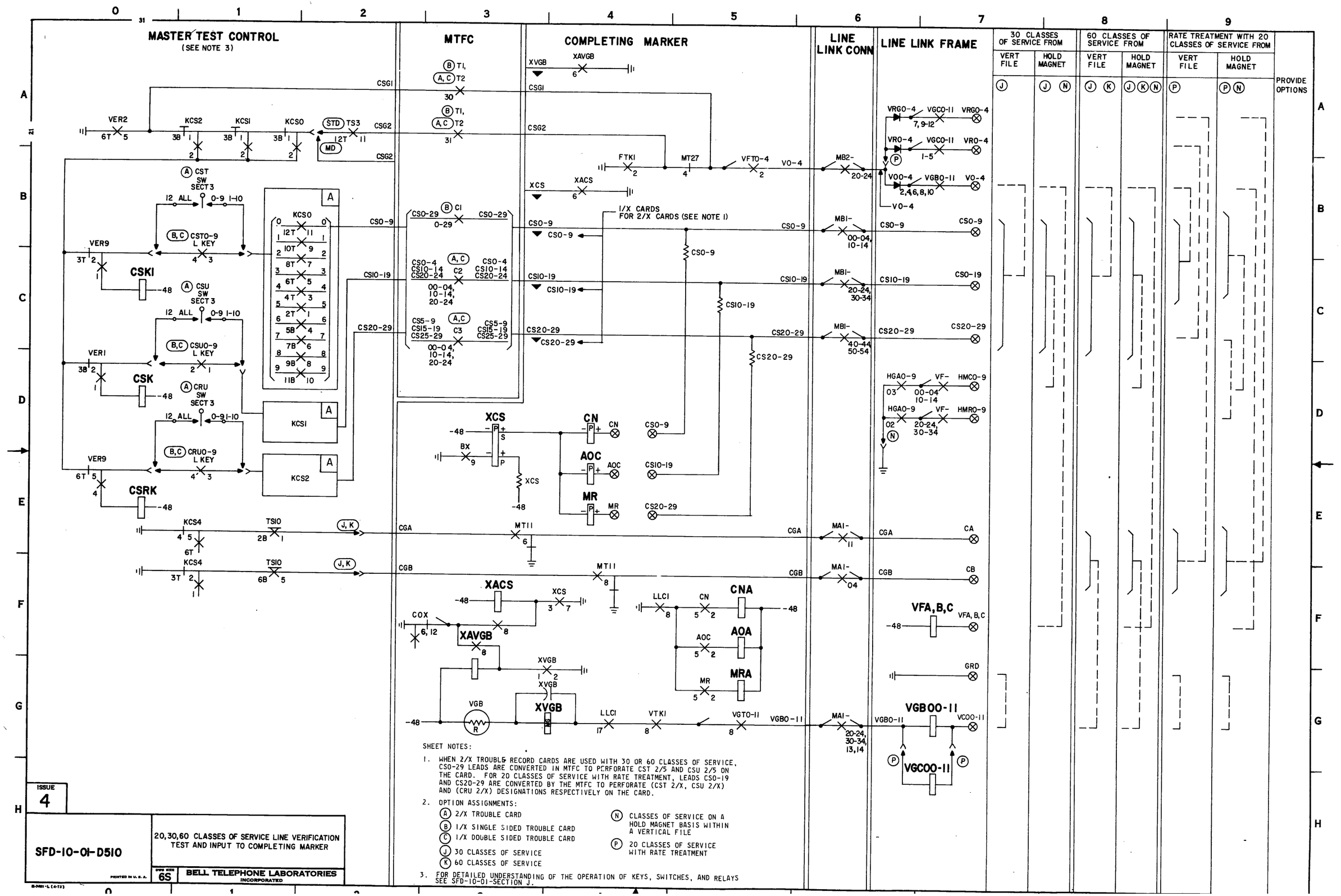

SHEET NOTES:

1. WHEN 2/X TROUBLE RECORD CARDS ARE USED WITH 30 OR 60 CLASSES OF SERVICE, CSO-29 LEADS ARE CONVERTED IN MTFC TO PERFORATE CST 2/5 AND CSU 2/5 ON THE CARD. FOR 20 CLASSES OF SERVICE WITH RATE TREATMENT, LEADS CSO-19 AND CS20-29 ARE CONVERTED BY THE MTFC TO PERFORATE (CST 2/X, CSU 2/X) AND (CRU 2/X) DESIGNATIONS RESPECTIVELY ON THE CARD.
2. OPTION ASSIGNMENTS:
   - (A) 2/X TROUBLE CARD
   - (B) 1/X SINGLE SIDED TROUBLE CARD
   - (C) 1/X DOUBLE SIDED TROUBLE CARD
   - (J) 30 CLASSES OF SERVICE
   - (K) 60 CLASSES OF SERVICE
   - (N) CLASSES OF SERVICE ON A HOLD MAGNET BASIS WITHIN A VERTICAL FILE
   - (P) 20 CLASSES OF SERVICE WITH RATE TREATMENT
3. FOR DETAILED UNDERSTANDING OF THE OPERATION OF KEYS, SWITCHES, AND RELAYS SEE SFD-10-01-SECTION J.

ISSUE 4

SFD-10-01-D510

20,30,60 CLASSES OF SERVICE LINE VERIFICATION TEST AND INPUT TO COMPLETING MARKER

DWG SIZE 6S

BELL TELEPHONE LABORATORIES INCORPORATED

PRINTED IN U.S.A.

SFD-10-01-D510

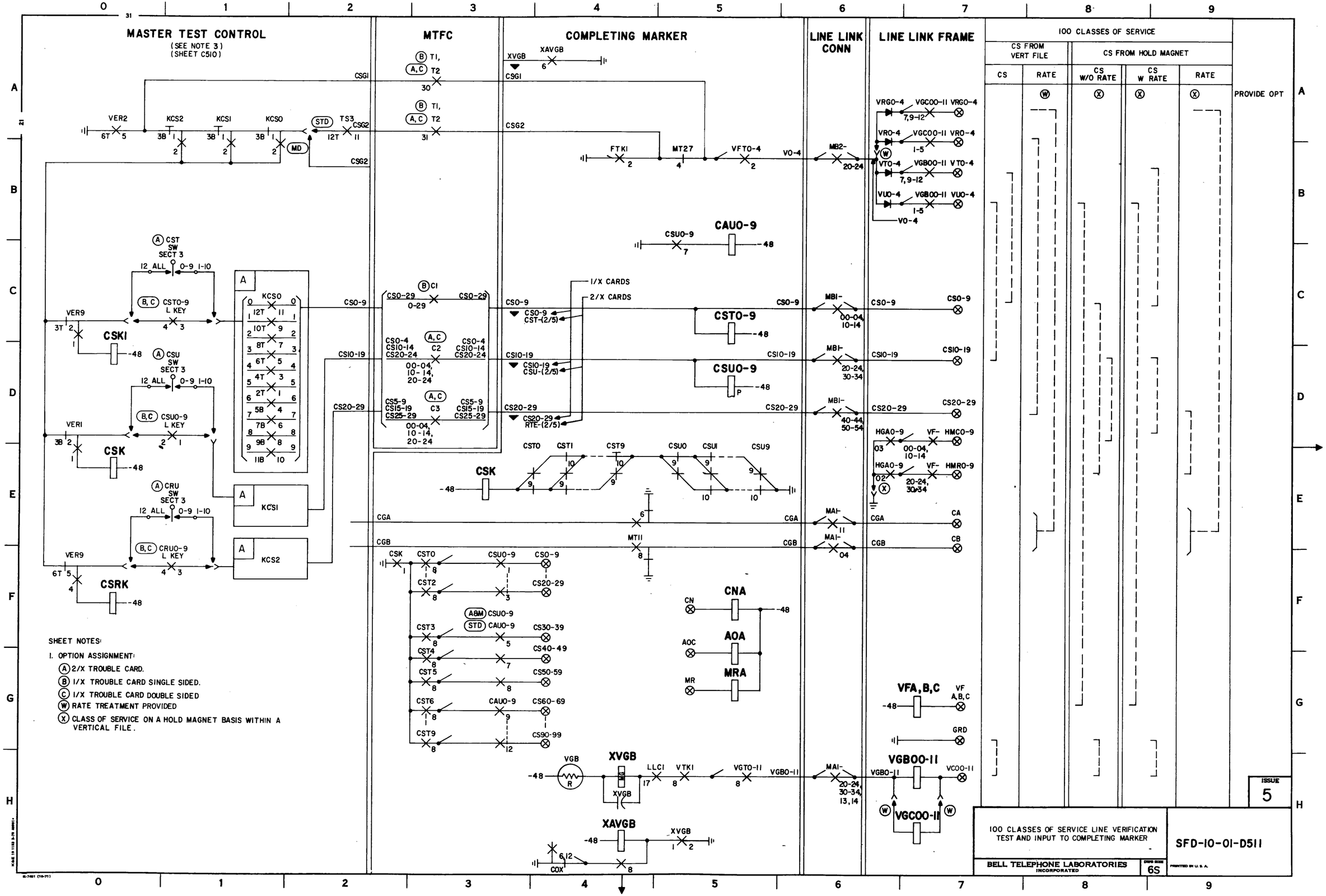
MASTER TEST CONTROL
(SEE NOTE 3)
(SHEET C510)
MTFC
COMPLETING MARKER
LINE LINK CONN
LINE LINK FRAME
100 CLASSES OF SERVICE
CS FROM VERT FILE
CS FROM HOLD MAGNET
CS
RATE
CS W/O RATE
CS W RATE
RATE
PROVIDE OPT
CSKI
CSK
CSRK
CAUO-9
CSTO-9
CSUO-9
CNA
AOA
MRA
VFA,B,C
VGBOO-11
VGCOO-11
XVGB
XAVGB
1/X CARDS
2/X CARDS
SHEET NOTES:
1. OPTION ASSIGNMENT:
(A) 2/X TROUBLE CARD.
(B) 1/X TROUBLE CARD SINGLE SIDED.
(C) 1/X TROUBLE CARD DOUBLE SIDED
(W) RATE TREATMENT PROVIDED
(X) CLASS OF SERVICE ON A HOLD MAGNET BASIS WITHIN A VERTICAL FILE.
100 CLASSES OF SERVICE LINE VERIFICATION TEST AND INPUT TO COMPLETING MARKER
BELL TELEPHONE LABORATORIES INCORPORATED
SFD-10-01-D511
ISSUE 5
SFD-10-01-D511

ESTABLISHING INCOMING TRUNK CONNECTION

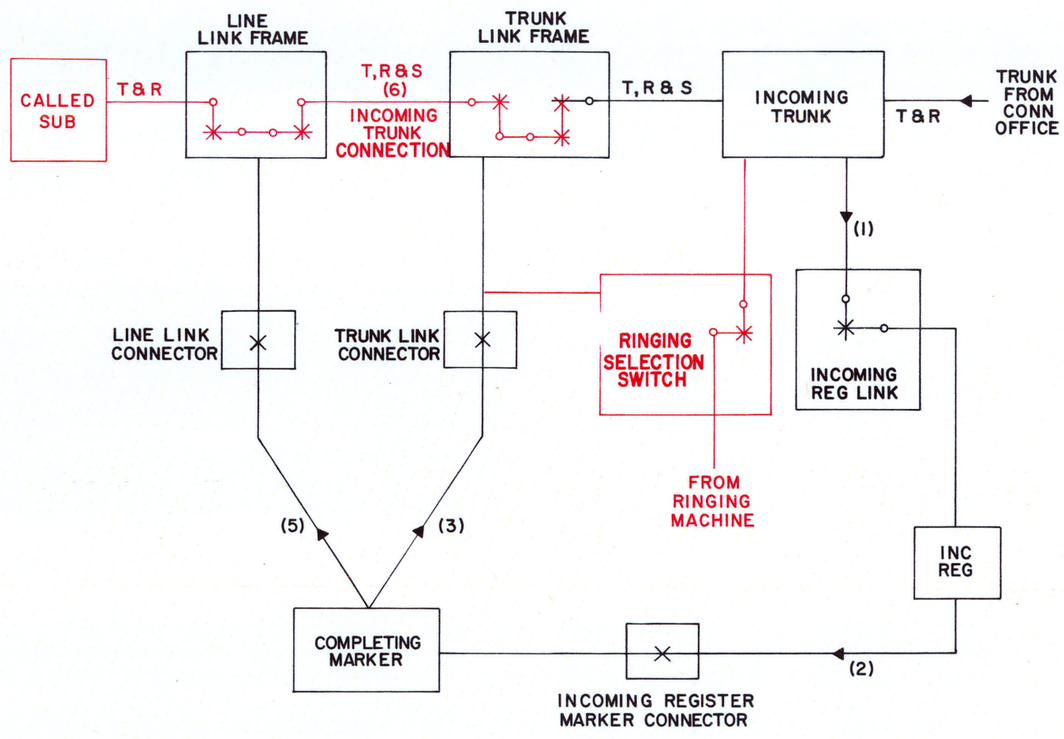

CAUTION!

DUE TO THE SIMPLIFIED NATURE OF THIS DOCUMENT, INFORMATION SHOWN MAY NOT BE COMPLETE.

INDEX

ISSUE 3

PART D6
NETWORK CONNECTION

SFD-10-01-D601

BELL TELEPHONE LABORATORIES INCORPORATED

DWG SIZE 6S

PRINTED IN U. S. A.

SFD-10-01-D601
2 SHEETS, SH 1

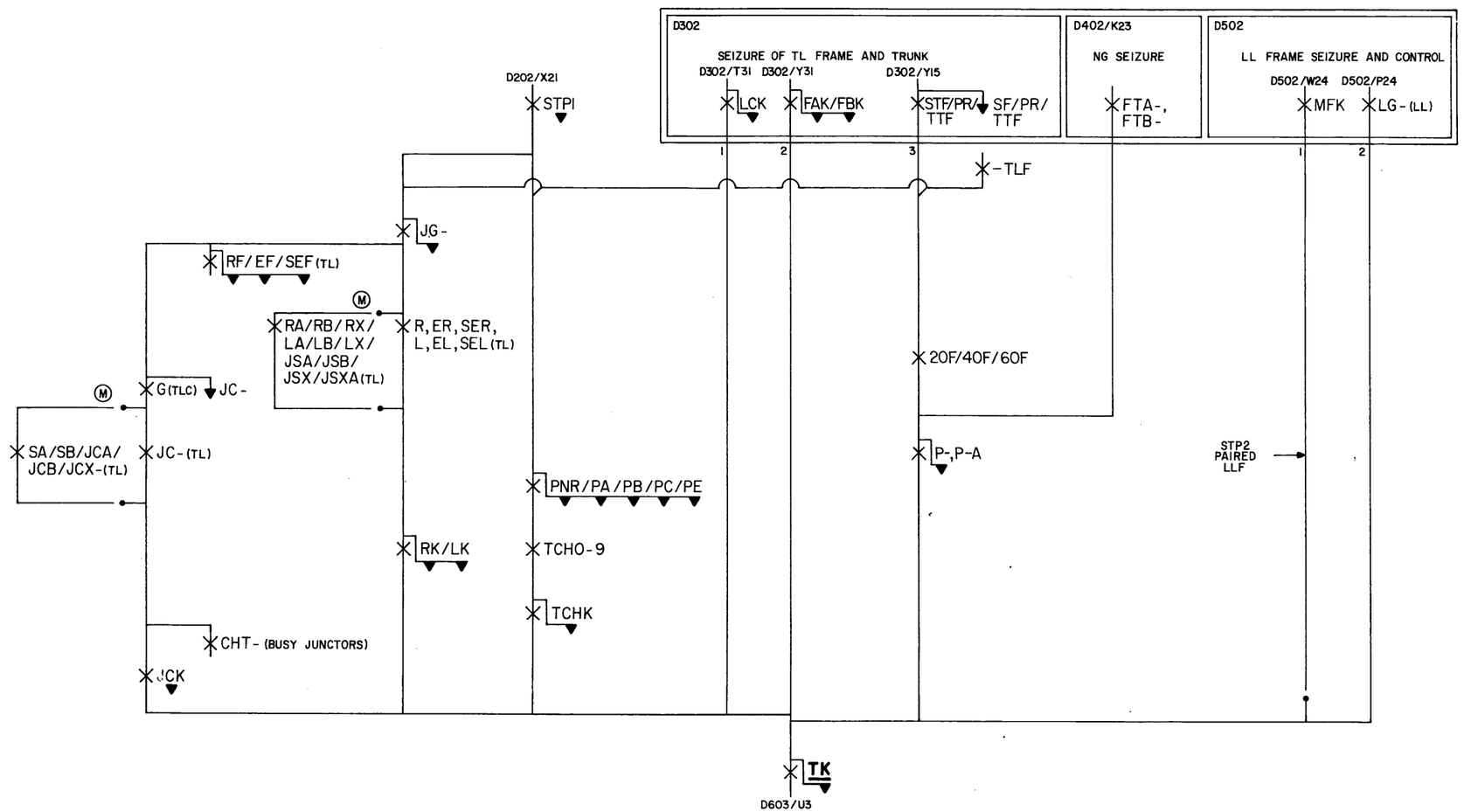

SHEET NOTES:
1. OPTION ASSIGNMENTS:
(M) TRUNK LINK FRAME (SD-27879-01)

ISSUE 4

SFD-10-01-D602

SEQUENCE CHART
PREPARATION FOR CHANNEL TEST

SIZE 6S

BELL TELEPHONE LABORATORIES INCORPORATED

PRINTED IN U.S.A.

CBL-267(10-75)

SFD-10-01-D602

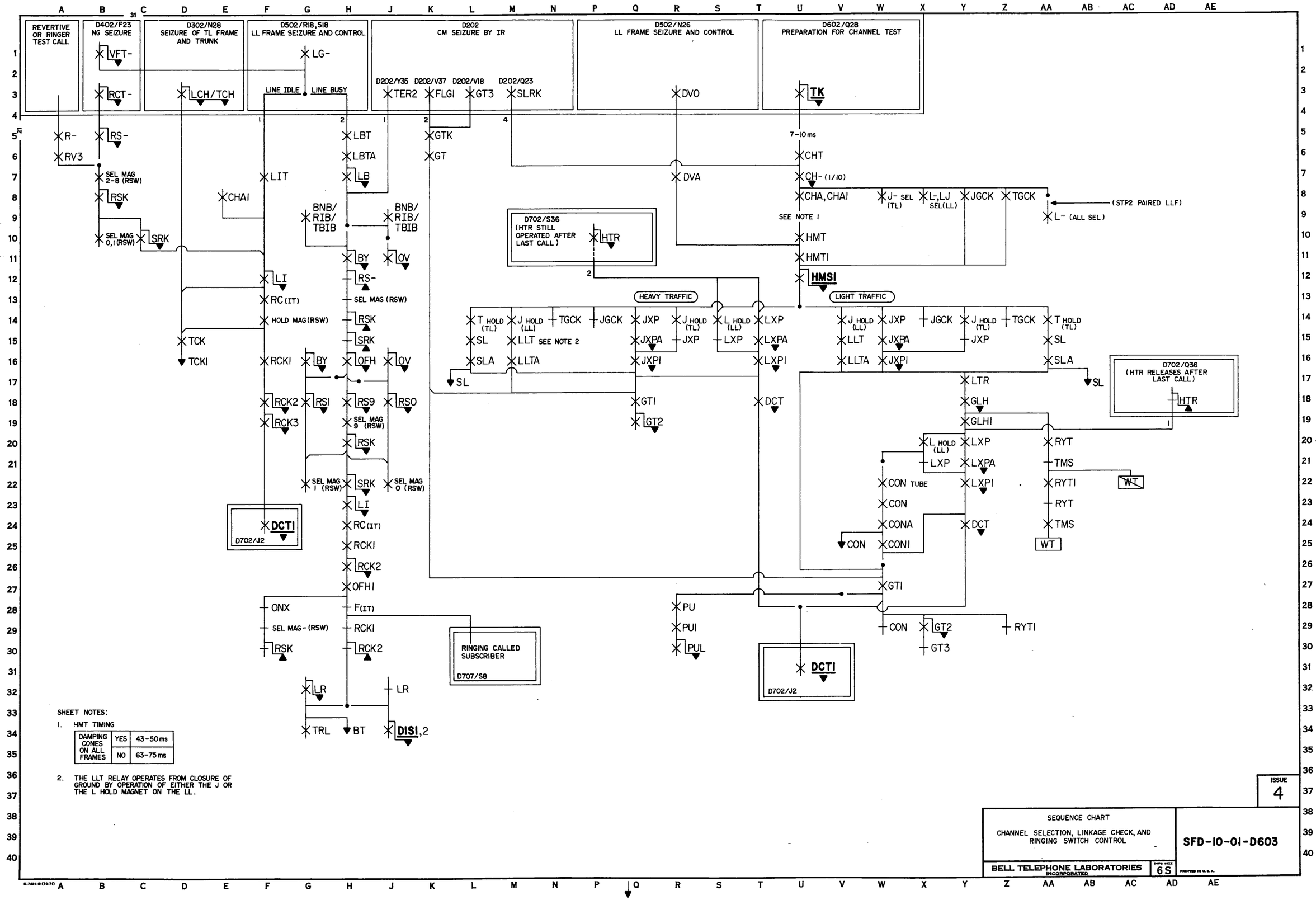

SHEET NOTES:

1. HMT TIMING

DAMPING CONES ON ALL FRAMES	YES	43-50 ms
	NO	63-75 ms

2. THE LLT RELAY OPERATES FROM CLOSURE OF GROUND BY OPERATION OF EITHER THE J OR THE L HOLD MAGNET ON THE LL.

ISSUE 4

SEQUENCE CHART

CHANNEL SELECTION, LINKAGE CHECK, AND RINGING SWITCH CONTROL

SFD-10-01-D603

BELL TELEPHONE LABORATORIES INCORPORATED

DWG SIZE 6S

PRINTED IN U.S.A.

SFD-10-01-D603

BRUNING 44-131 24092

E-7481-B (10-71)

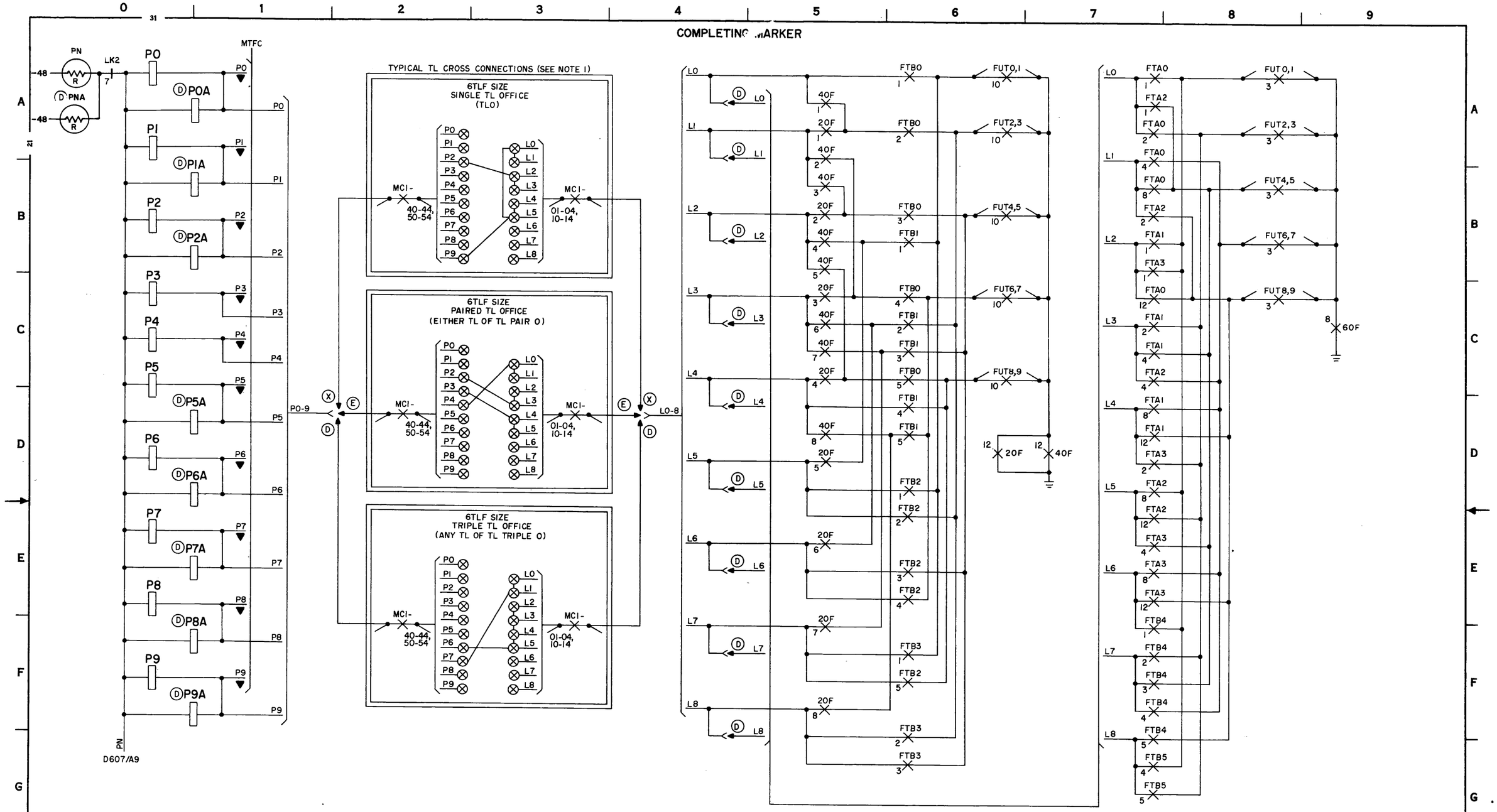

SHEET NOTES:

1. TYPICAL TL CROSS CONNECTIONS ARE SHOWN FOR 6TLF SIZE OFFICES WITH SINGLE, PAIRED OR TRIPLE TL. REFER TO BSP 819-220-150 FOR TL CROSS CONNECTIONS FOR ANY SIZE OFFICE.
2. OPTION ASSIGNMENT:
   - (D) TRIPLE TL OFFICE
   - (E) PAIRED TL OFFICE
   - (X) SINGLE TL OFFICE

ISSUE 3

SFD-10-01-D604

JUNCTOR PATTERN UNITS CONTROL

DWG SIZE 6S

BELL TELEPHONE LABORATORIES INCORPORATED

PRINTED IN U. S. A.

E-24821-1 (4-72)

SFD-10-01-D604

COMPLETING MARKER

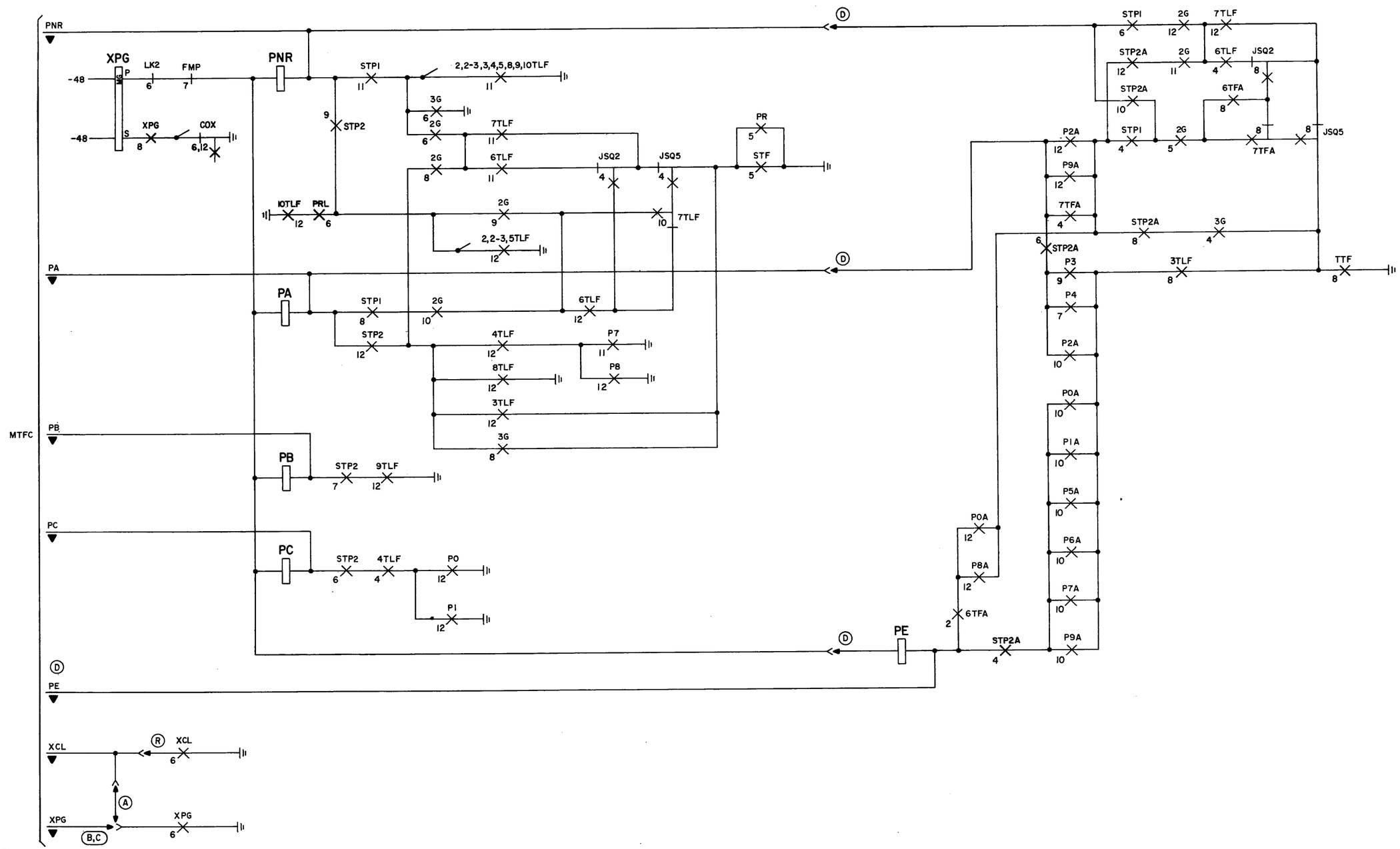

SHEET NOTES:

1. OPTION ASSIGNMENTS:

(A) 2/X TROUBLE CARD

(B,C) 1/X TROUBLE CARDS

(D) TRIPLE TRUNK LINK FRAMES

(R) 3 TO 6 GROUPS OF ORIGINATING REGISTERS

ISSUE 4

JUNCTOR PATTERN TENS CONTROL

SFD-10-01-D605

BELL TELEPHONE LABORATORIES INCORPORATED

DWG SIZE 6S

PRINTED IN U. S. A.

SFD-10-01-D605

COMPLETING MARKER JUNCTOR SEQUENCE CONTROL (TEST CALL)

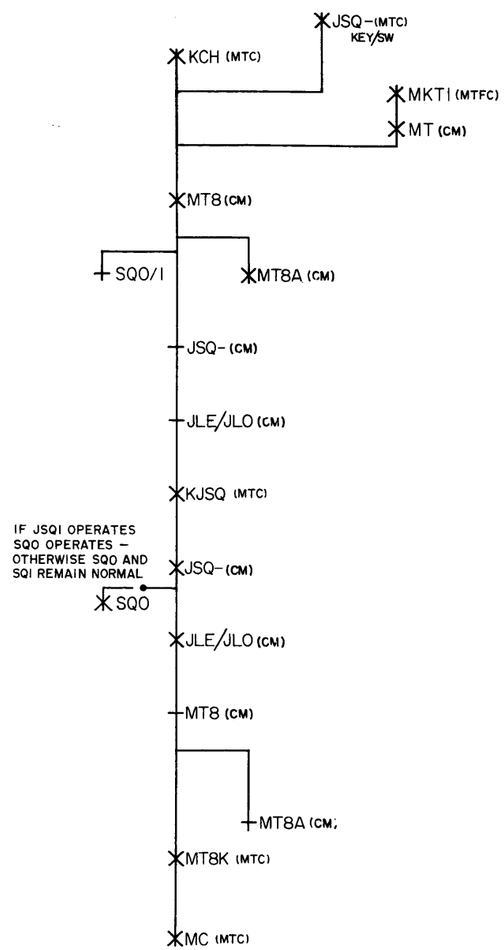

COMPLETING MARKER JUNCTOR SEQUENCE CONTROL

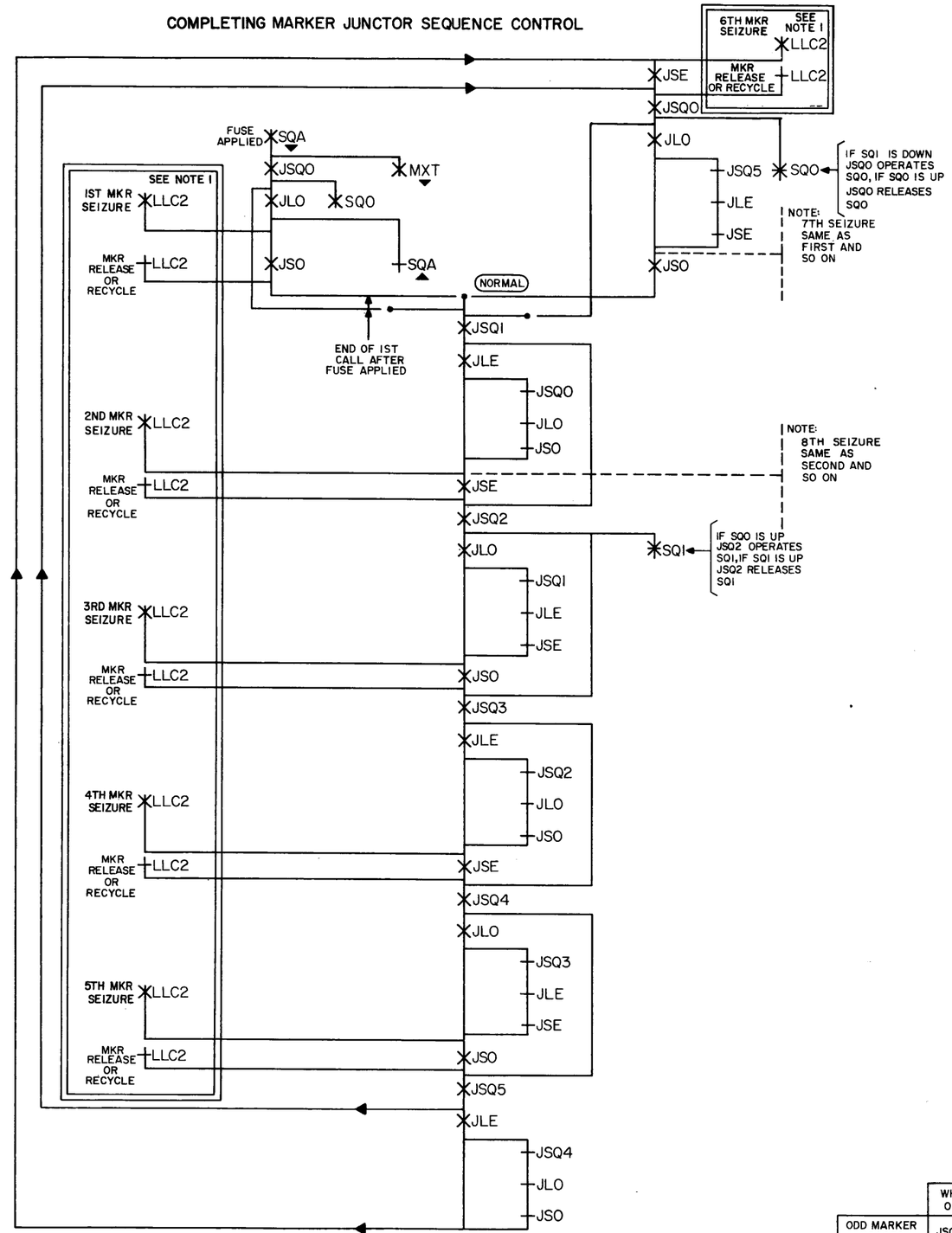

SHEET NOTES:

1. LLC2 IS OPERATED AT THE BEGINNING OF EACH MARKER SIEZURE (D202/S21).
   LLC2 IS RELEASED UPON MARKER RELEASE (E703/Q21)

	WHEN LLC2 OPERATES	WHEN LLC2 RELEASES
ODD MARKER USAGES	JSO OPERATES	JSQ1, 3 OR 5 & JLE OPERATES
EVEN MARKER USAGES	JSE OPERATES	JSQ0, 2 OR 4 & JLO OPERATES

ISSUE 3

SFD-10-01-D606

SEQUENCE CHART
JUNCTOR SEQUENCE CONTROL

DWG SIZE 6S

BELL TELEPHONE LABORATORIES INCORPORATED

E-7421-B (10-71)

SFD-10-01-D606

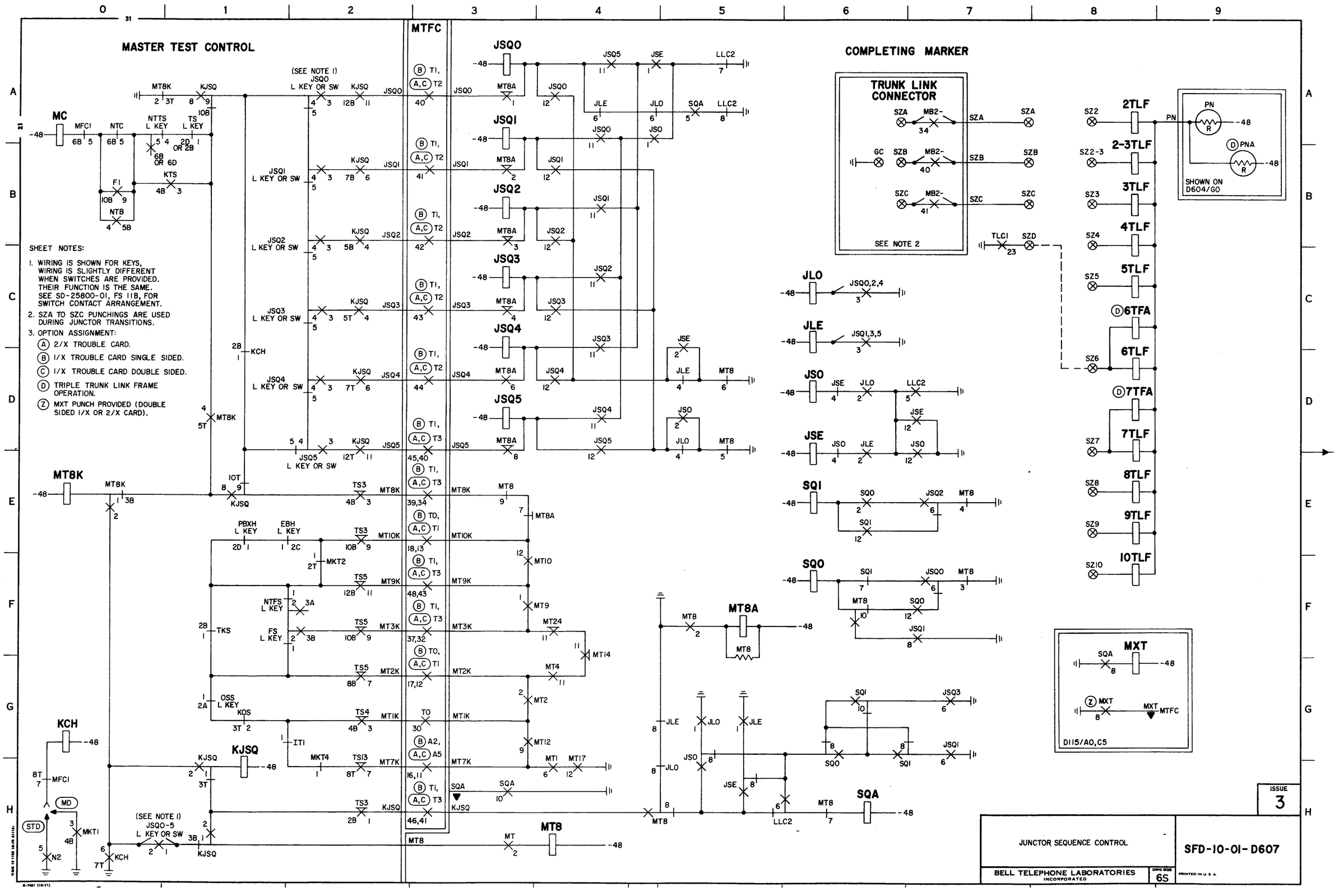

SHEET NOTES:

1. WIRING IS SHOWN FOR KEYS, WIRING IS SLIGHTLY DIFFERENT WHEN SWITCHES ARE PROVIDED. THEIR FUNCTION IS THE SAME. SEE SD-25800-01, FS 11B, FOR SWITCH CONTACT ARRANGEMENT.
2. SZA TO SZC PUNCHINGS ARE USED DURING JUNCTOR TRANSITIONS.
3. OPTION ASSIGNMENT:
   - (A) 2/X TROUBLE CARD.
   - (B) 1/X TROUBLE CARD SINGLE SIDED.
   - (C) 1/X TROUBLE CARD DOUBLE SIDED.
   - (D) TRIPLE TRUNK LINK FRAME OPERATION.
   - (Z) MXT PUNCH PROVIDED (DOUBLE SIDED 1/X OR 2/X CARD).

COMPLETING MARKER

JUNCTOR SUBGROUP SELECTION
FOR 2,2-3,5 AND 10 TLF SIZES
(SEE NOTE 1)

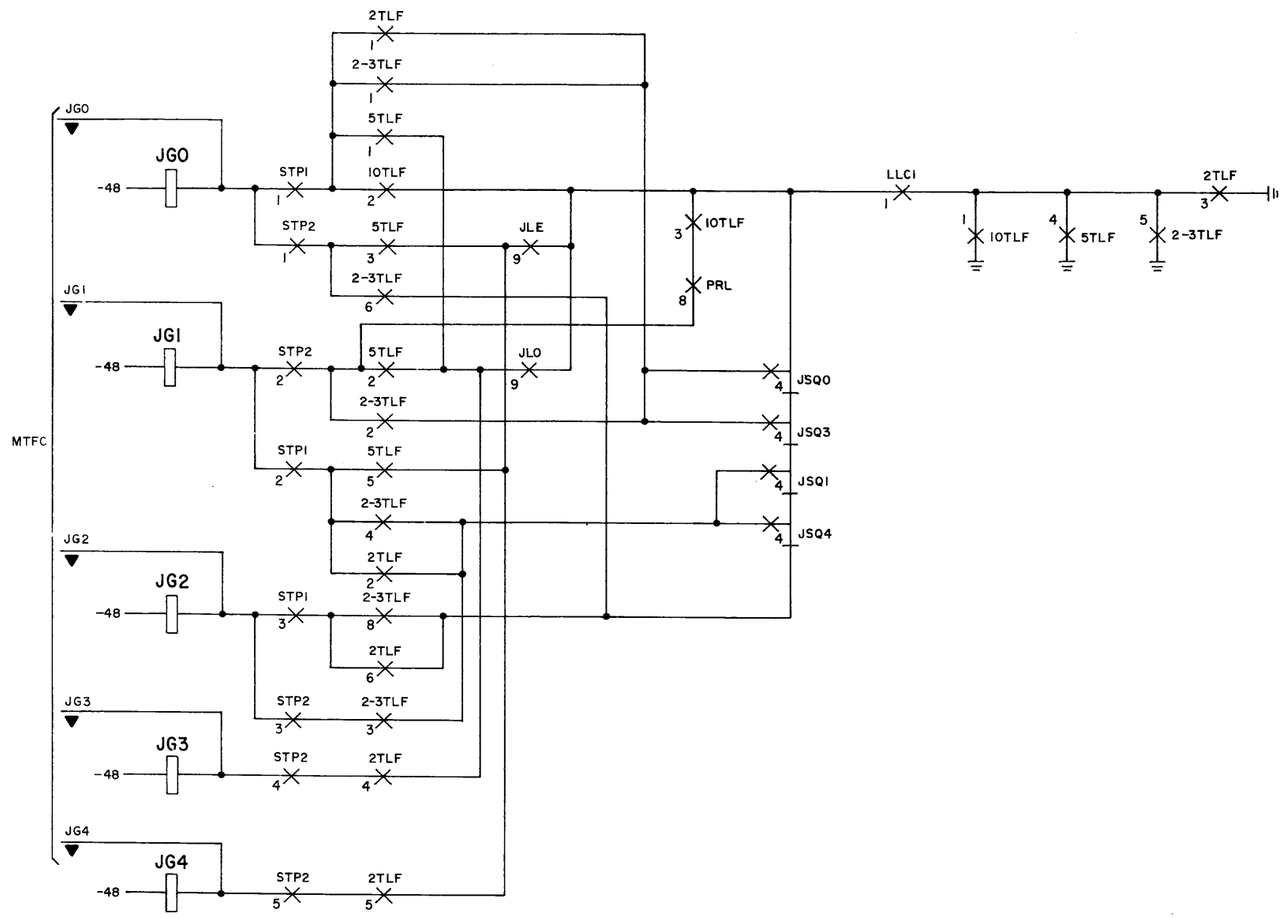

SHEET NOTES:

1. THIS IS A SIMPLIFIED DRAWING SHOWING PATHS USED FOR JUNCTOR SUBGROUP SELECTION IN 2,2-3,5 AND 10 TLF SIZES. ALL JUNCTOR SUBGROUPS FOR THESE SIZES HAVE 10 JUNCTORS.

ISSUE 3

SFD-10-01-D608

JUNCTOR SUBGROUP SELECTION
FOR 2,2-3,5 AND 10 TLF SIZES

DWG SIZE 6S

BELL TELEPHONE LABORATORIES
INCORPORATED

PRINTED IN U.S.A.

E-7481-L (4-73)

SFD-10-01-D608

COMPLETING MARKER

JUNCTOR SUBGROUP SELECTION
FOR 3,4,6,7,8,9 TLF SIZES
(SEE NOTE 1)

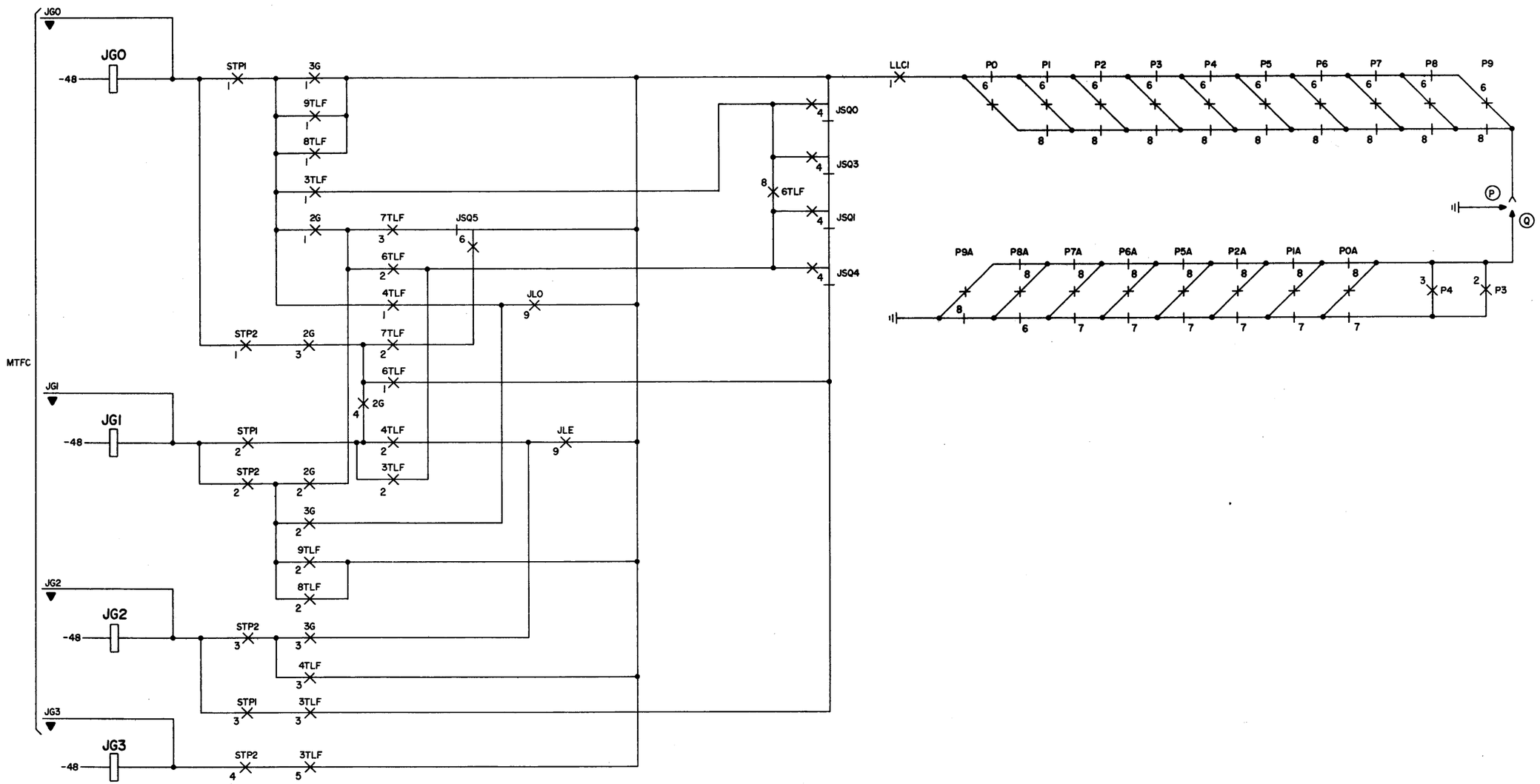

SHEET NOTES:

1. THIS IS A SIMPLIFIED DRAWING SHOWING PATHS USED FOR JUNCTOR SUBGROUP SELECTION IN 3,4,6,7,8, AND 9 TLF SIZES. EACH OF THESE SIZES HAVE ONE OR MORE JUNCTOR SUBGROUPS WITH LESS THAN 10 JUNCTORS.
2. OPTION ASSIGNMENTS:
   - (P) 20 OR LESS TRUNK LINK FRAMES.
   - (Q) MORE THAN 20 TRUNK LINK FRAMES.

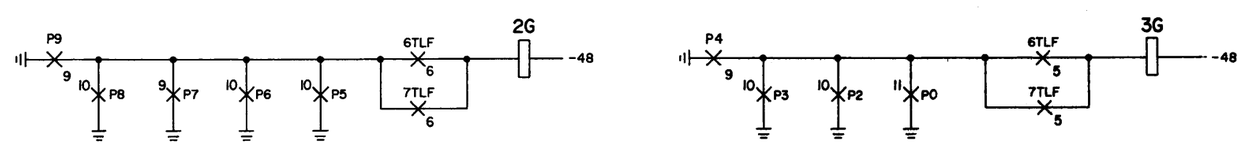

ISSUE 3

JUNCTOR SUBGROUP SELECTION
FOR 3,4,6,7,8,9 TLF SIZES

SFD-10-01-D609

BELL TELEPHONE LABORATORIES INCORPORATED

DWG SIZE 6S

PRINTED IN U.S.A.

SFD-10-01-D609

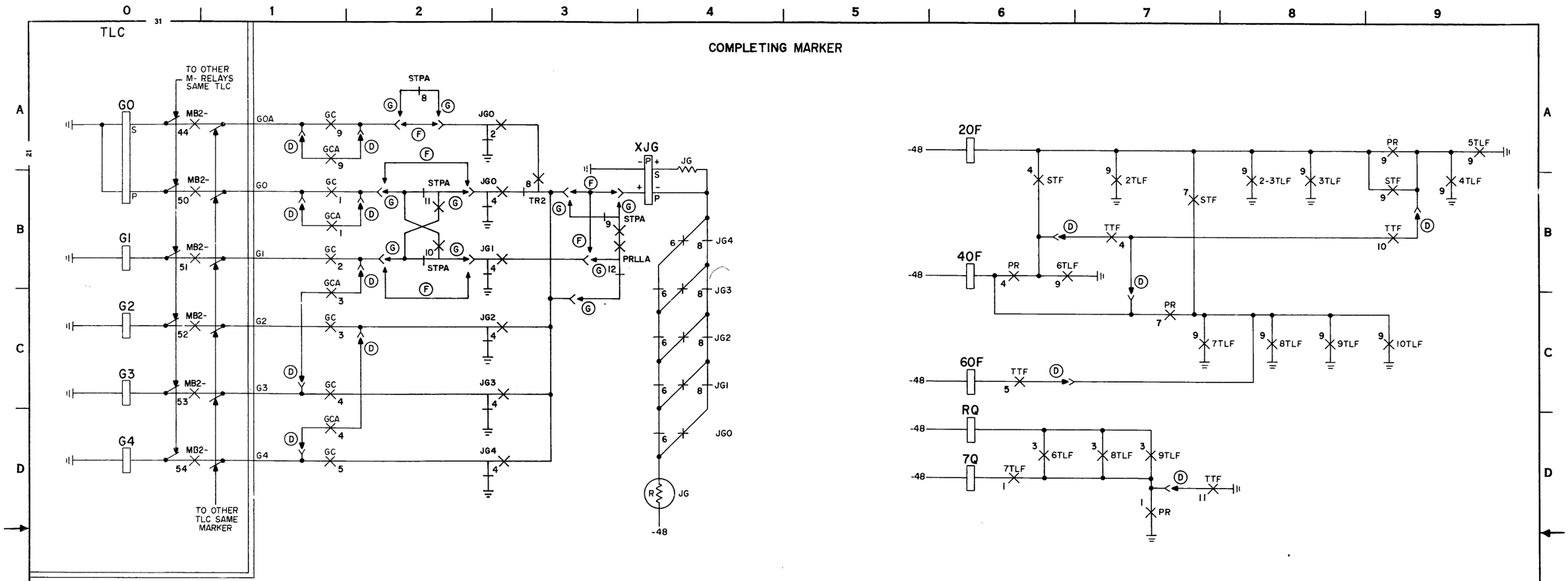

SHEET NOTES:

1.

	X CONN	TO
SINGLE TL	SPF	SF
PAIRED TL	SPF	PR
TRIPLE TL	SPF	TTF

2. OPTION ASSIGNMENTS:
   - (D) TRIPLE TRUNK LINK FRAMES
   - (F) NON PAIRED LINE LINK FRAMES
   - (G) PAIRED LINE LINK FRAMES
3. SF TO TTF PUNCHINGS ARE USED DURING JUNCTOR TRANSITIONS.

ISSUE 3

SFD-10-01-D610

JUNCTOR SUBGROUP
CONNECTOR RELAYS

DWG SIZE 6S

BELL TELEPHONE LABORATORIES INCORPORATED

PRINTED IN U. S. A.

E-7481-L (4-72)

SFD-10-01-D610

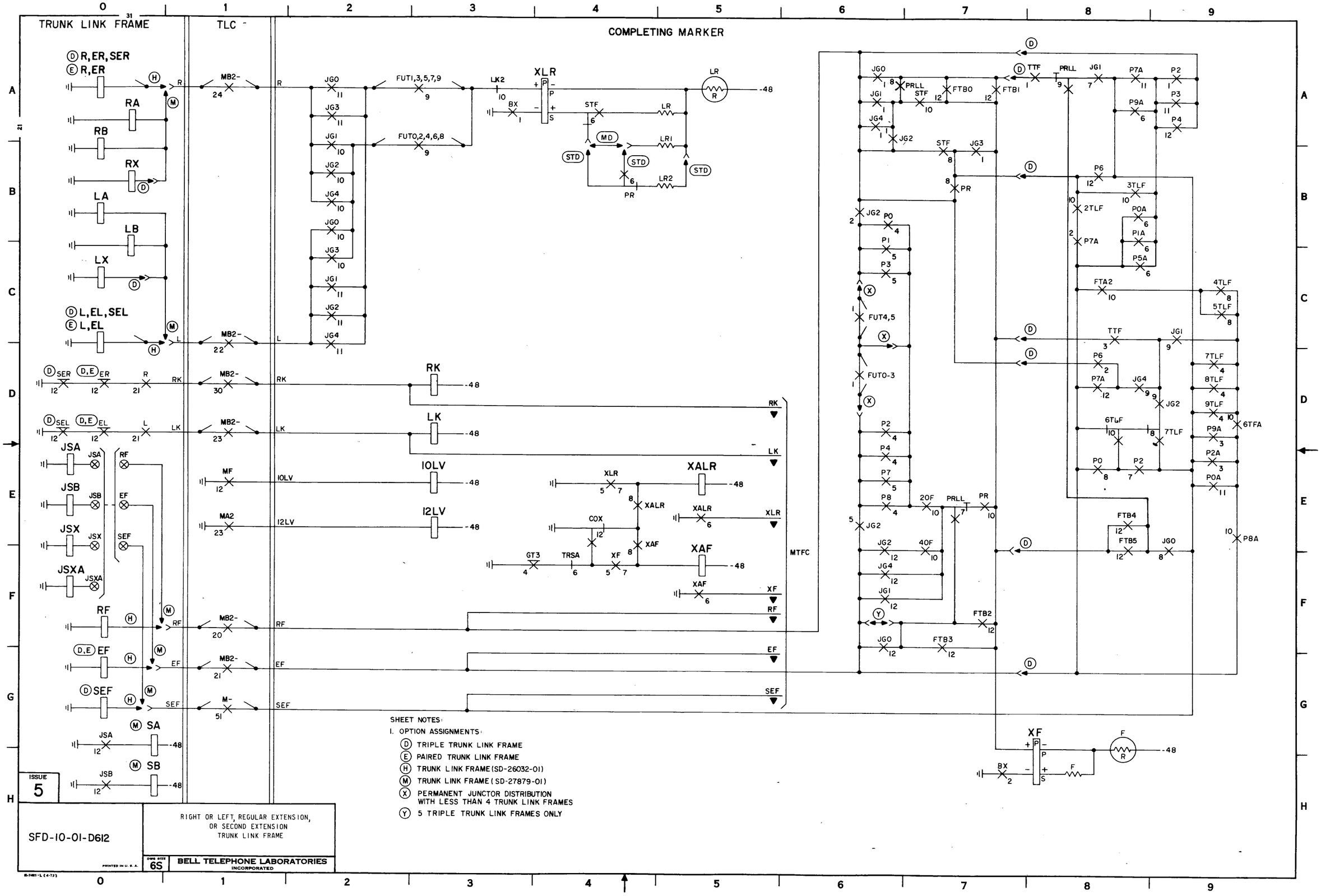

SFD-10-01-D612

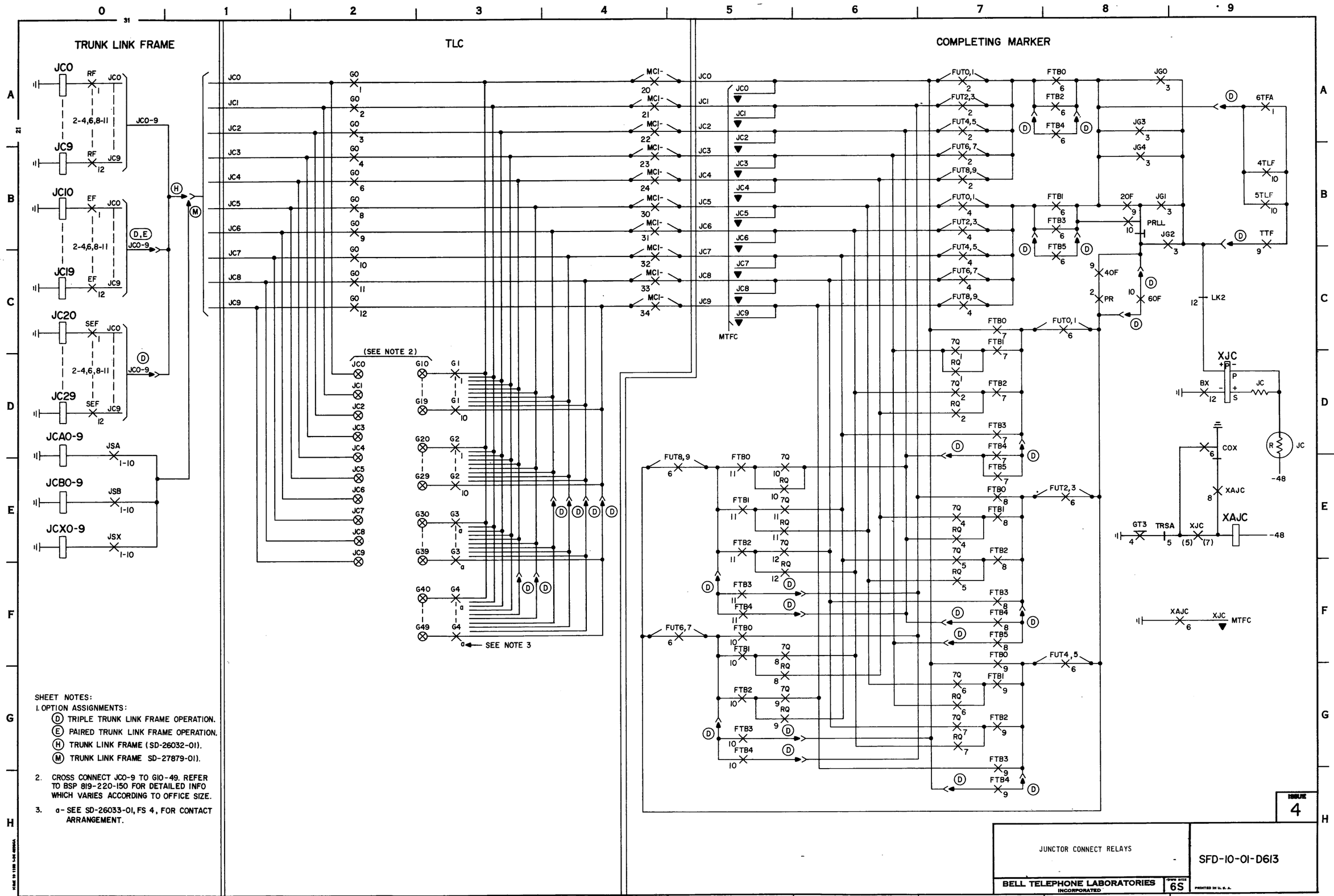

SHEET NOTES:

1. OPTION ASSIGNMENTS:
   - (D) TRIPLE TRUNK LINK FRAME OPERATION.
   - (E) PAIRED TRUNK LINK FRAME OPERATION.
   - (H) TRUNK LINK FRAME (SD-26032-01).
   - (M) TRUNK LINK FRAME SD-27879-01).
2. CROSS CONNECT JCO-9 TO GIO-49. REFER TO BSP 819-220-150 FOR DETAILED INFO WHICH VARIES ACCORDING TO OFFICE SIZE.
3. a- SEE SD-26033-01, FS 4, FOR CONTACT ARRANGEMENT.

ISSUE 4

JUNCTOR CONNECT RELAYS

SFD-10-01-D613

BELL TELEPHONE LABORATORIES INCORPORATED

6S

PRINTED IN U.S.A.

SFD-10-01-D613

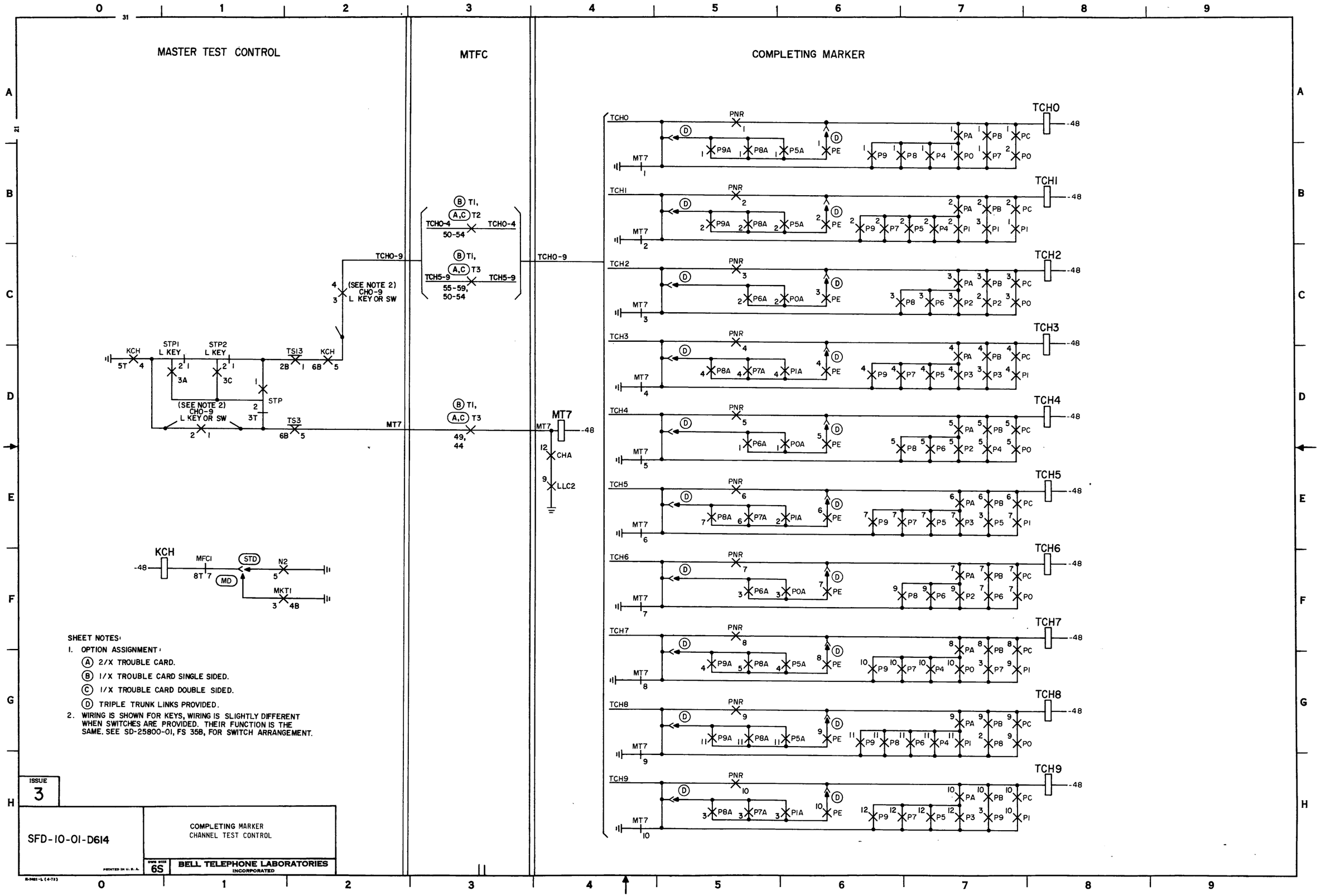
MASTER TEST CONTROL
MTFC
COMPLETING MARKER
KCH
STP1 L KEY
STP2 L KEY
TSI3
STP
TS3
(SEE NOTE 2) CHO-9 L KEY OR SW
TCHO-9
MT7
TCHO-4
TCH5-9
CHA
LLC2
TCHO
TCH1
TCH2
TCH3
TCH4
TCH5
TCH6
TCH7
TCH8
TCH9
PNR
MFCI
STD
MD
N2
MKT1
SHEET NOTES:
1. OPTION ASSIGNMENT:
(A) 2/X TROUBLE CARD.
(B) 1/X TROUBLE CARD SINGLE SIDED.
(C) 1/X TROUBLE CARD DOUBLE SIDED.
(D) TRIPLE TRUNK LINKS PROVIDED.
2. WIRING IS SHOWN FOR KEYS, WIRING IS SLIGHTLY DIFFERENT WHEN SWITCHES ARE PROVIDED. THEIR FUNCTION IS THE SAME. SEE SD-25800-01, FS 358, FOR SWITCH ARRANGEMENT.
ISSUE 3
SFD-10-01-D614
COMPLETING MARKER
CHANNEL TEST CONTROL
DWG SIZE 6S
BELL TELEPHONE LABORATORIES INCORPORATED
PRINTED IN U.S.A.
SFD-10-01-D614

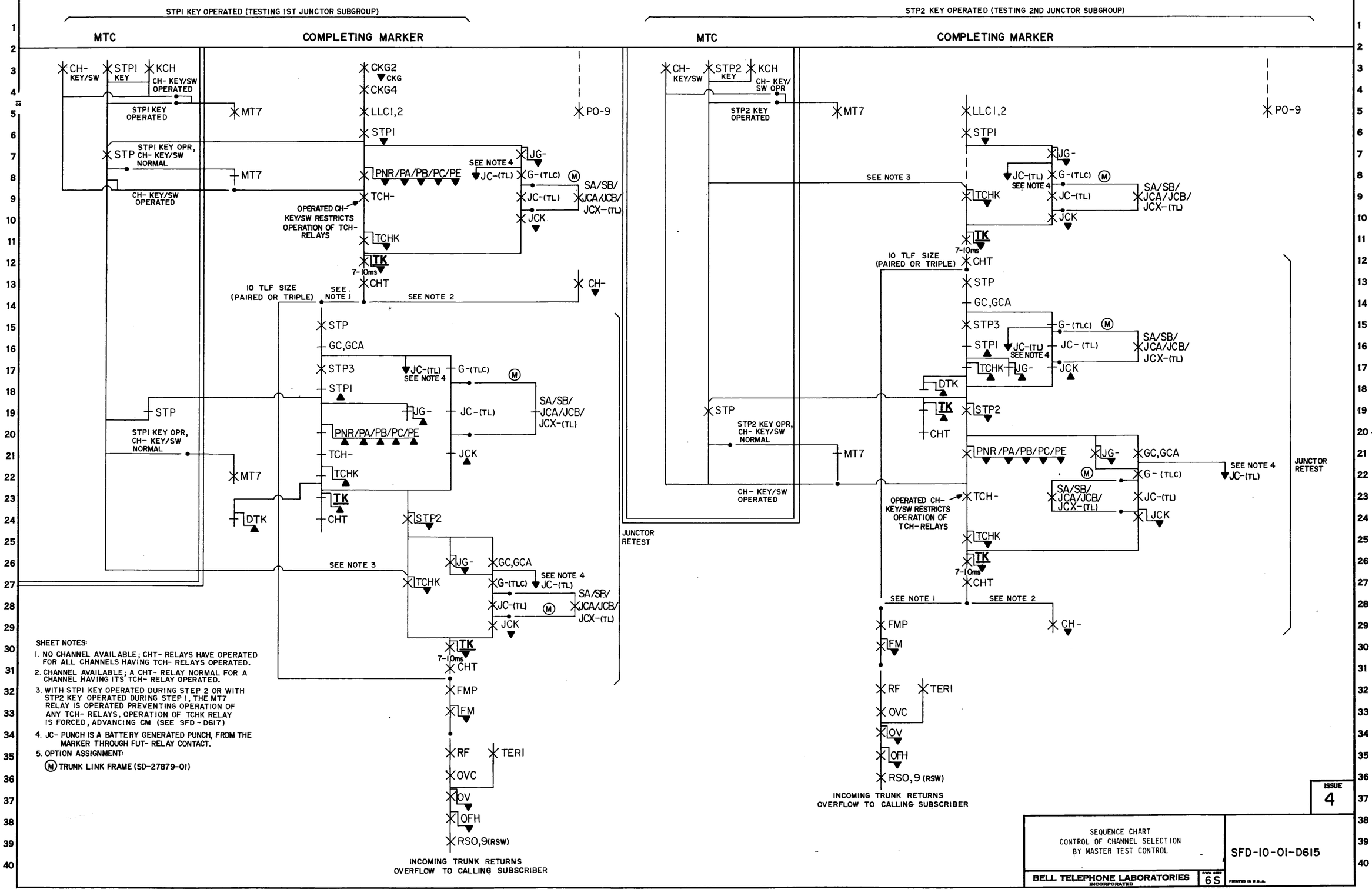

SFD-10-01-D615

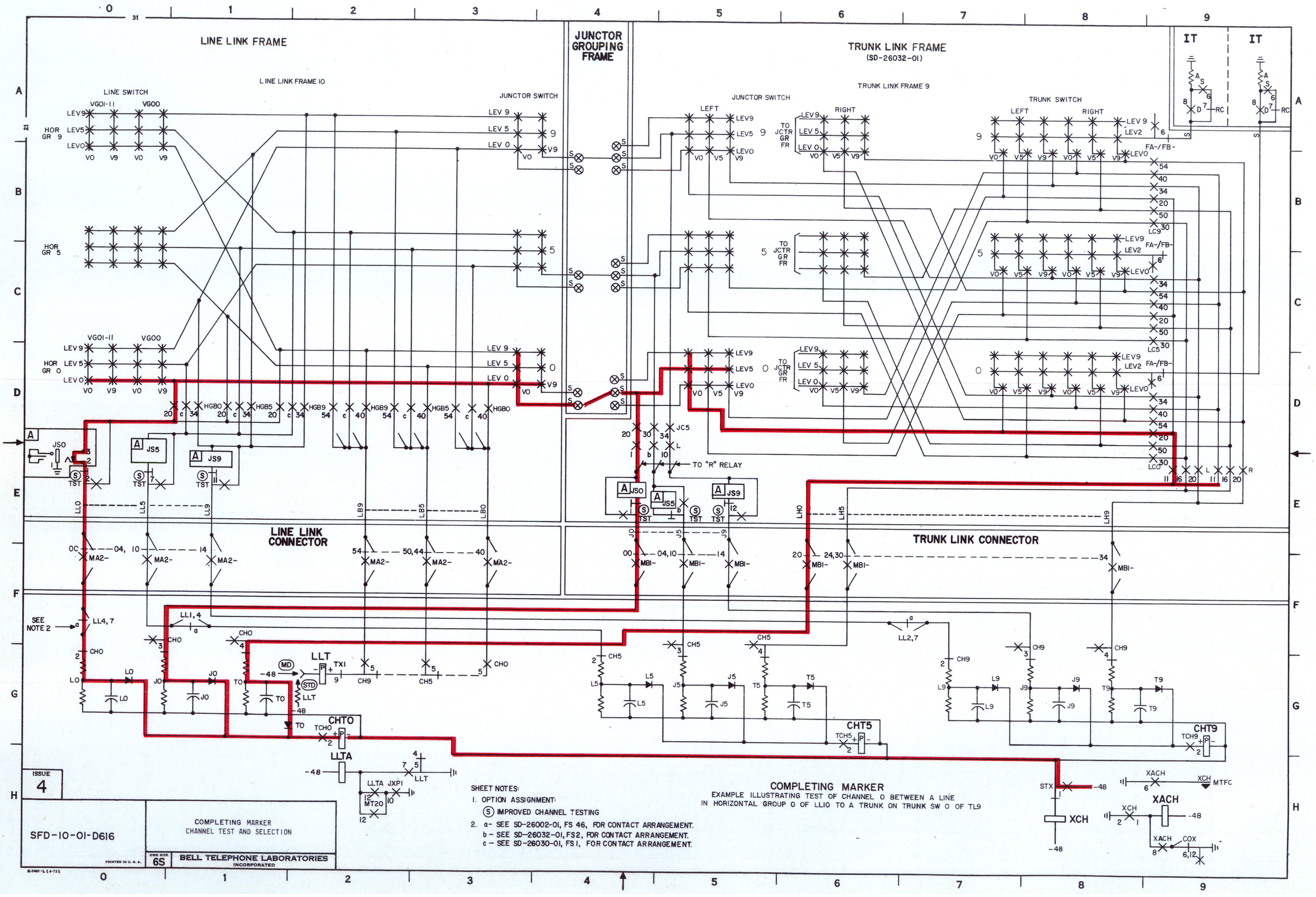

SHEET NOTES:

1. OPTION ASSIGNMENT:
   (S) IMPROVED CHANNEL TESTING
2. a- SEE SD-26002-01, FS 46, FOR CONTACT ARRANGEMENT.
   b - SEE SD-26032-01, FS2, FOR CONTACT ARRANGEMENT.
   c - SEE SD-26030-01, FS1, FOR CONTACT ARRANGEMENT.

SFD-10-01-D616
2 SHEETS, SH 1

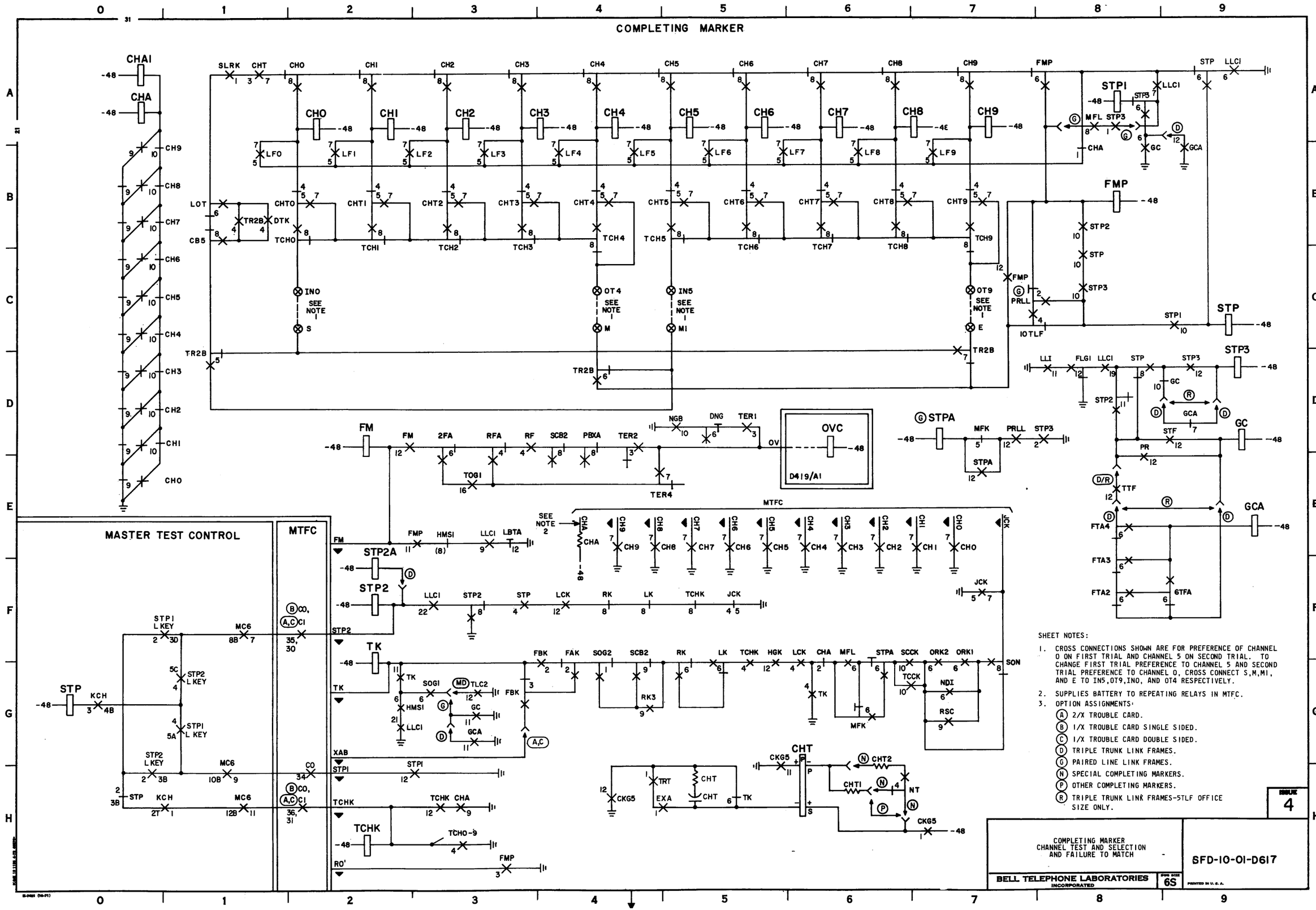

SFD-10-01-D617

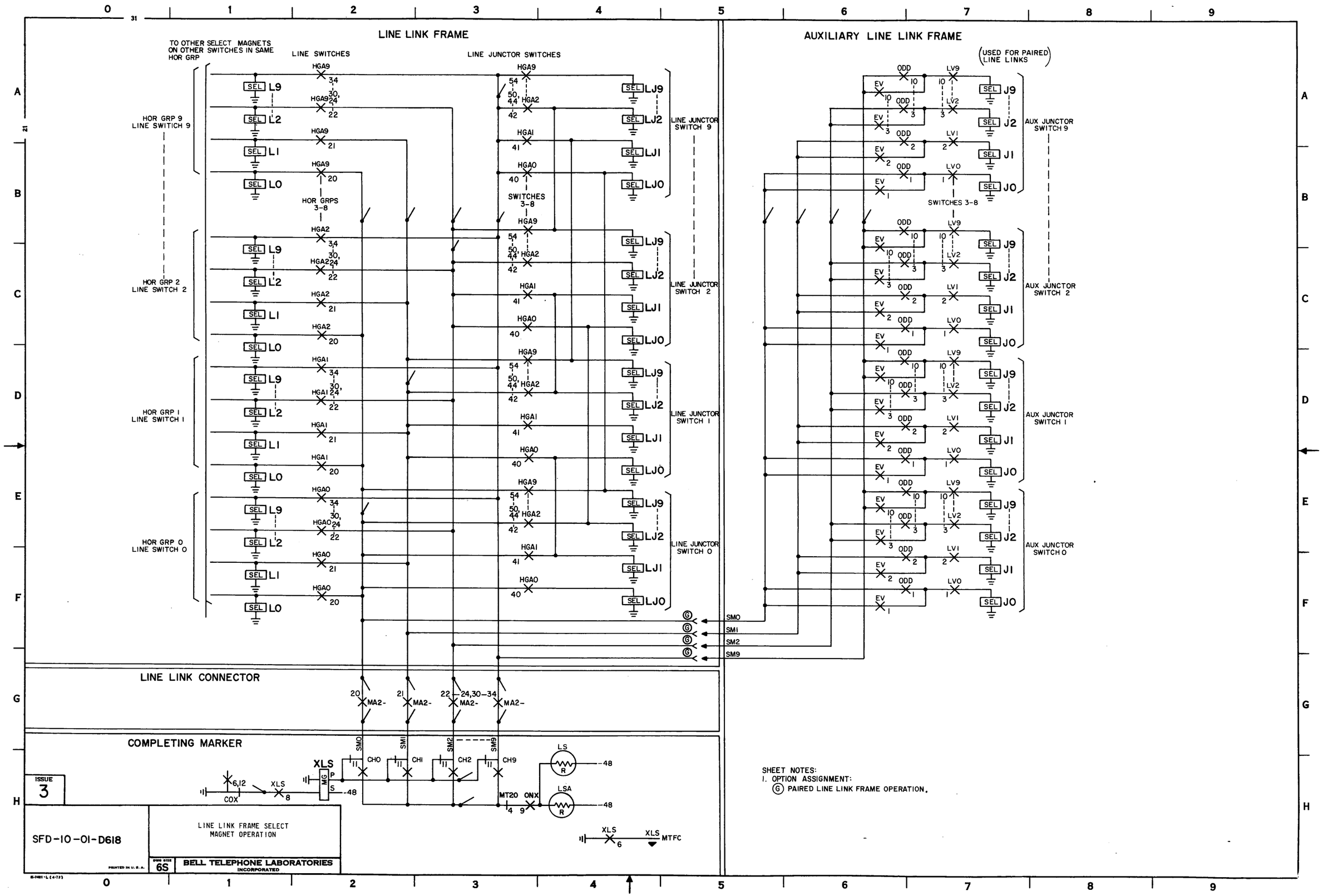
LINE LINK FRAME
TO OTHER SELECT MAGNETS ON OTHER SWITCHES IN SAME HOR GRP
LINE SWITCHES
LINE JUNCTOR SWITCHES
HOR GRP 9 LINE SWITCH 9
HOR GRP 2 LINE SWITCH 2
HOR GRP 1 LINE SWITCH 1
HOR GRP 0 LINE SWITCH 0
HOR GRPS 3-8
SWITCHES 3-8
LINE JUNCTOR SWITCH 9
LINE JUNCTOR SWITCH 2
LINE JUNCTOR SWITCH 1
LINE JUNCTOR SWITCH 0
AUXILIARY LINE LINK FRAME
(USED FOR PAIRED LINE LINKS)
AUX JUNCTOR SWITCH 9
AUX JUNCTOR SWITCH 2
AUX JUNCTOR SWITCH 1
AUX JUNCTOR SWITCH 0
SMO
SM1
SM2
SM9
LINE LINK CONNECTOR
COMPLETING MARKER
XLS
LS
LSA
MTFC
SHEET NOTES:
1. OPTION ASSIGNMENT:
(G) PAIRED LINE LINK FRAME OPERATION.
ISSUE 3
SFD-10-01-D618
LINE LINK FRAME SELECT MAGNET OPERATION
BELL TELEPHONE LABORATORIES INCORPORATED
DWG SIZE 6S
PRINTED IN U.S.A.
SFD-10-01-D618

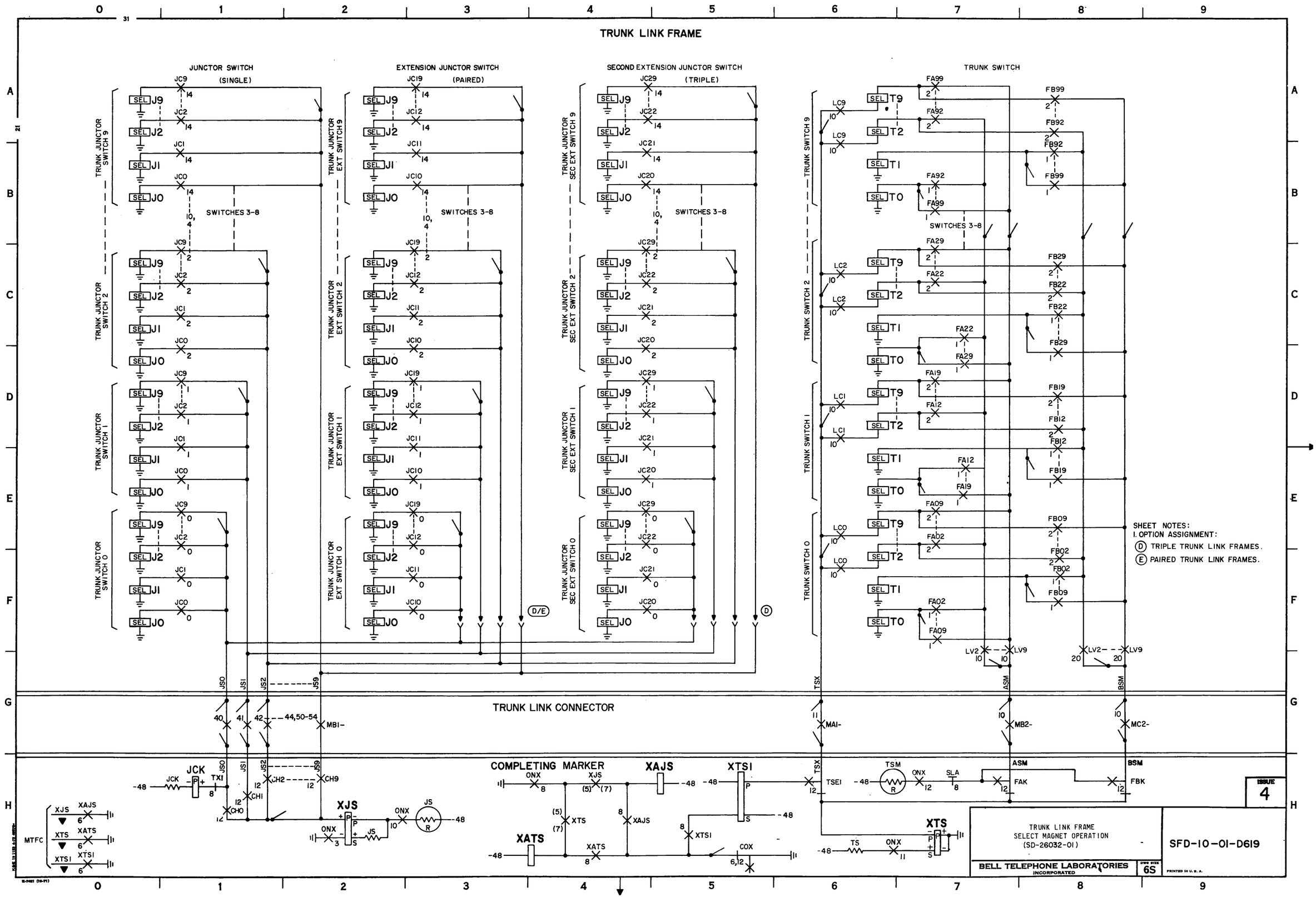

SFD-10-01-D619

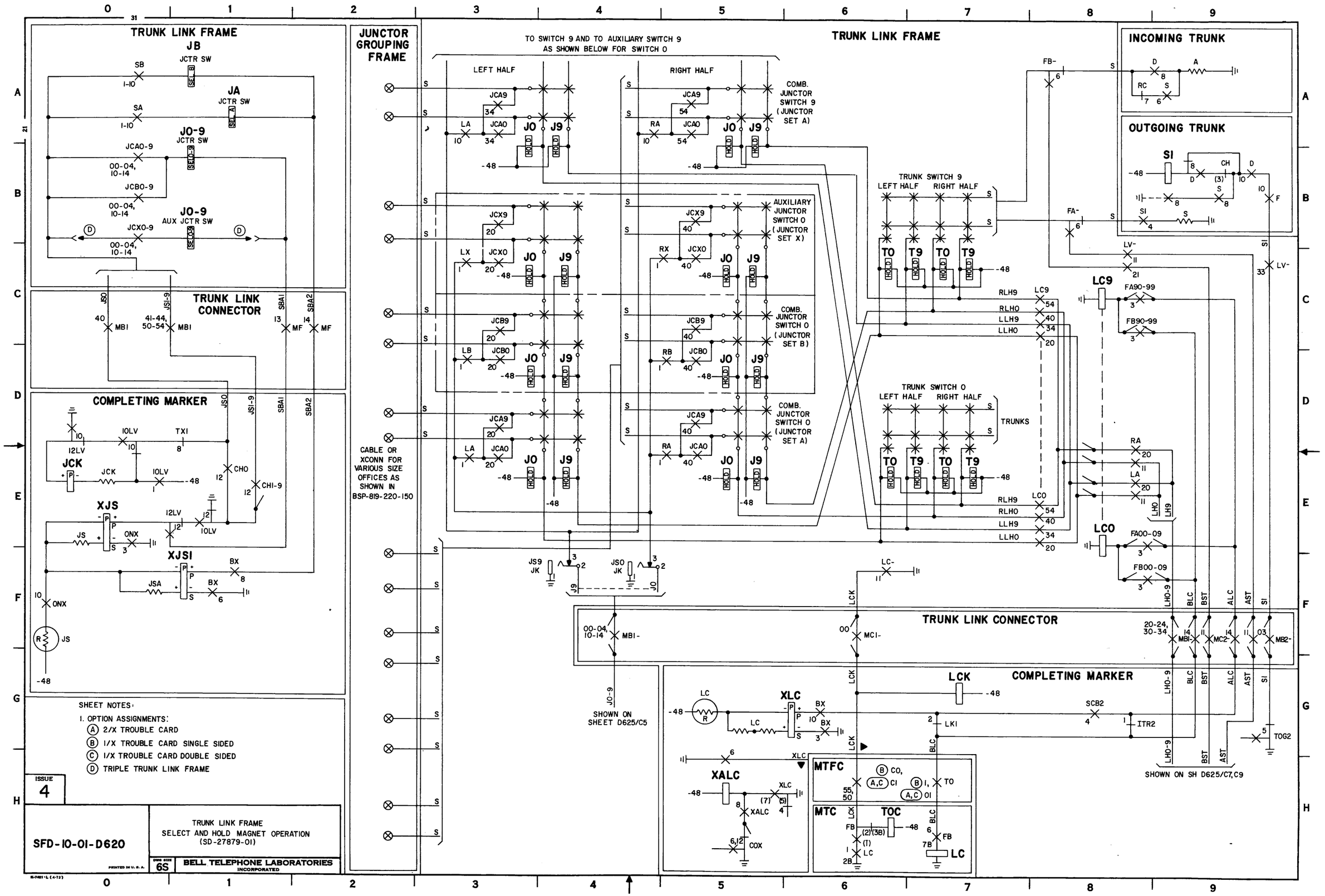

SHEET NOTES:

1. OPTION ASSIGNMENTS:
   - (A) 2/X TROUBLE CARD
   - (B) 1/X TROUBLE CARD SINGLE SIDED
   - (C) 1/X TROUBLE CARD DOUBLE SIDED
   - (D) TRIPLE TRUNK LINK FRAME

ISSUE 4

SFD-10-01-D620

TRUNK LINK FRAME
SELECT AND HOLD MAGNET OPERATION
(SD-27879-01)

DWG SIZE 6S

BELL TELEPHONE LABORATORIES INCORPORATED

PRINTED IN U.S.A.

SFD-10-01-D620

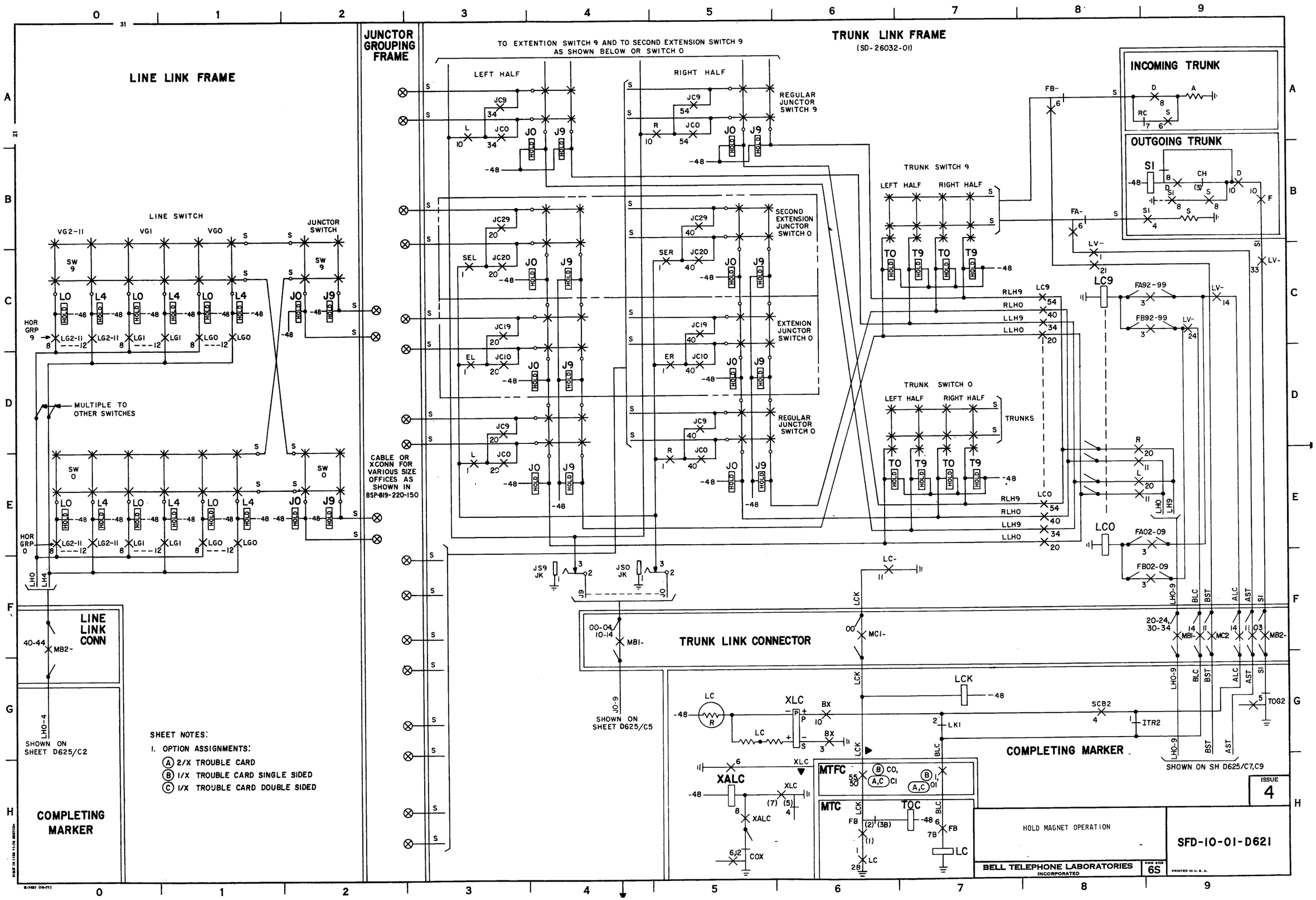

SFD-10-01-D621

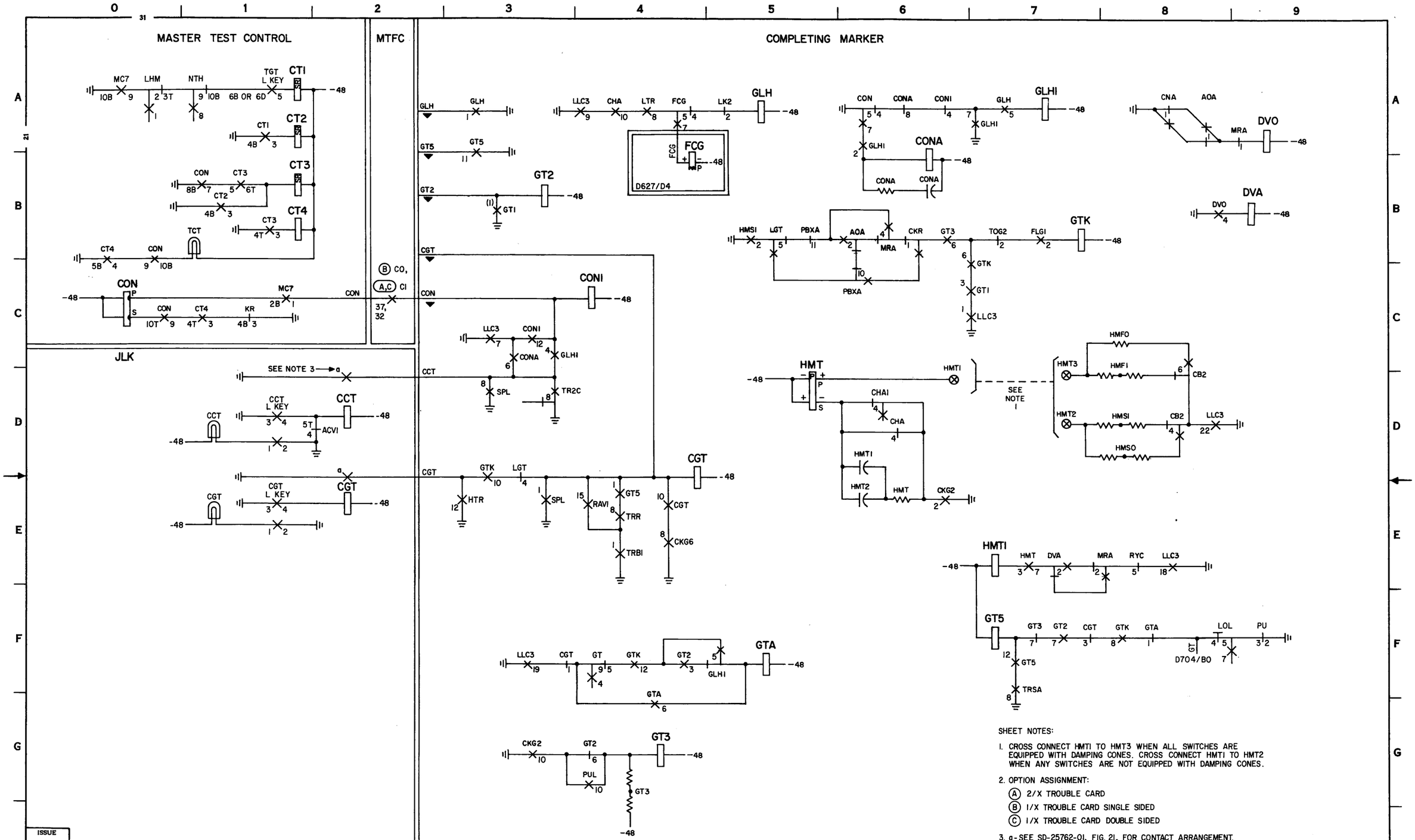

SHEET NOTES:

1. CROSS CONNECT HMTI TO HMT3 WHEN ALL SWITCHES ARE EQUIPPED WITH DAMPING CONES. CROSS CONNECT HMTI TO HMT2 WHEN ANY SWITCHES ARE NOT EQUIPPED WITH DAMPING CONES.
2. OPTION ASSIGNMENT:
   - (A) 2/X TROUBLE CARD
   - (B) 1/X TROUBLE CARD SINGLE SIDED
   - (C) 1/X TROUBLE CARD DOUBLE SIDED
3. a - SEE SD-25762-01, FIG. 21, FOR CONTACT ARRANGEMENT.

ISSUE 4

SFD-10-01-D622

HOLD MAGNET TIMING AND CONTROL

DWG SIZE 6S

BELL TELEPHONE LABORATORIES INCORPORATED

PRINTED IN U. S. A.

E-7481-L (4-72)

SFD-10-01-D622

COMPLETING MARKER

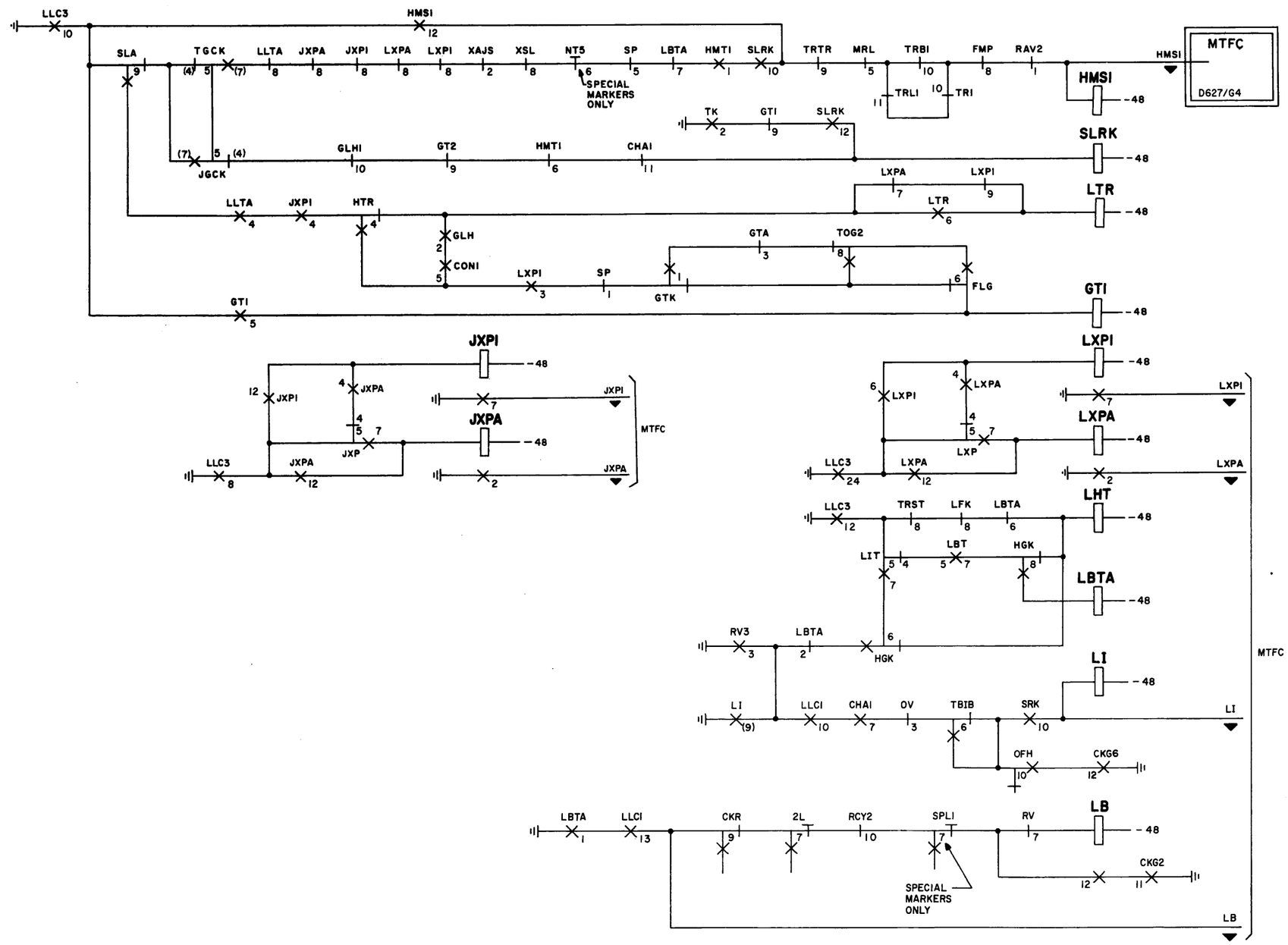

HOLD MAGNET TIMING AND CONTROL

BELL TELEPHONE LABORATORIES INCORPORATED

DWG SIZE 6S

SFD-10-01-D623

ISSUE 4

PRINTED IN U.S.A.

SFD-10-01-D623

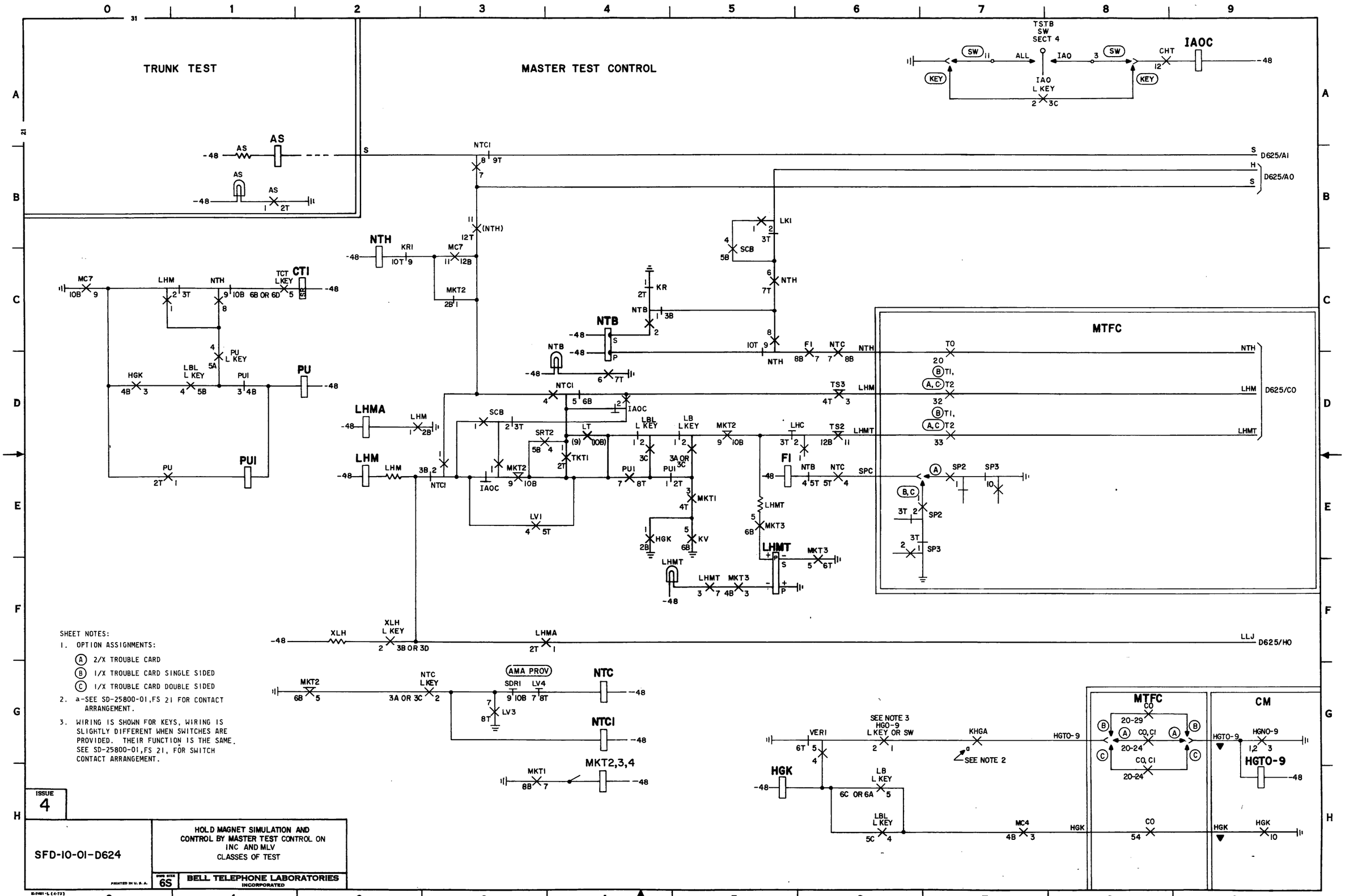
TRUNK TEST
MASTER TEST CONTROL
MTFC
CM
AS
NTH
CTI
PU
PUI
LHMA
LHM
NTB
NTCI
IAOC
LHMT
FI
NTC
MKT2,3,4
HGK
HGTO-9
D625/AI
D625/AO
D625/CO
D625/HO
SEE NOTE 3
HGO-9
L KEY OR SW
SEE NOTE 2
AMA PROV
SHEET NOTES:
1. OPTION ASSIGNMENTS:
(A) 2/X TROUBLE CARD
(B) 1/X TROUBLE CARD SINGLE SIDED
(C) 1/X TROUBLE CARD DOUBLE SIDED
2. a-SEE SD-25800-01,FS 21 FOR CONTACT ARRANGEMENT.
3. WIRING IS SHOWN FOR KEYS, WIRING IS SLIGHTLY DIFFERENT WHEN SWITCHES ARE PROVIDED. THEIR FUNCTION IS THE SAME. SEE SD-25800-01,FS 21, FOR SWITCH CONTACT ARRANGEMENT.
ISSUE 4
SFD-10-01-D624
HOLD MAGNET SIMULATION AND CONTROL BY MASTER TEST CONTROL ON INC AND MLV CLASSES OF TEST
DWG SIZE 6S
BELL TELEPHONE LABORATORIES INCORPORATED
PRINTED IN U.S.A.
SFD-10-01-D624

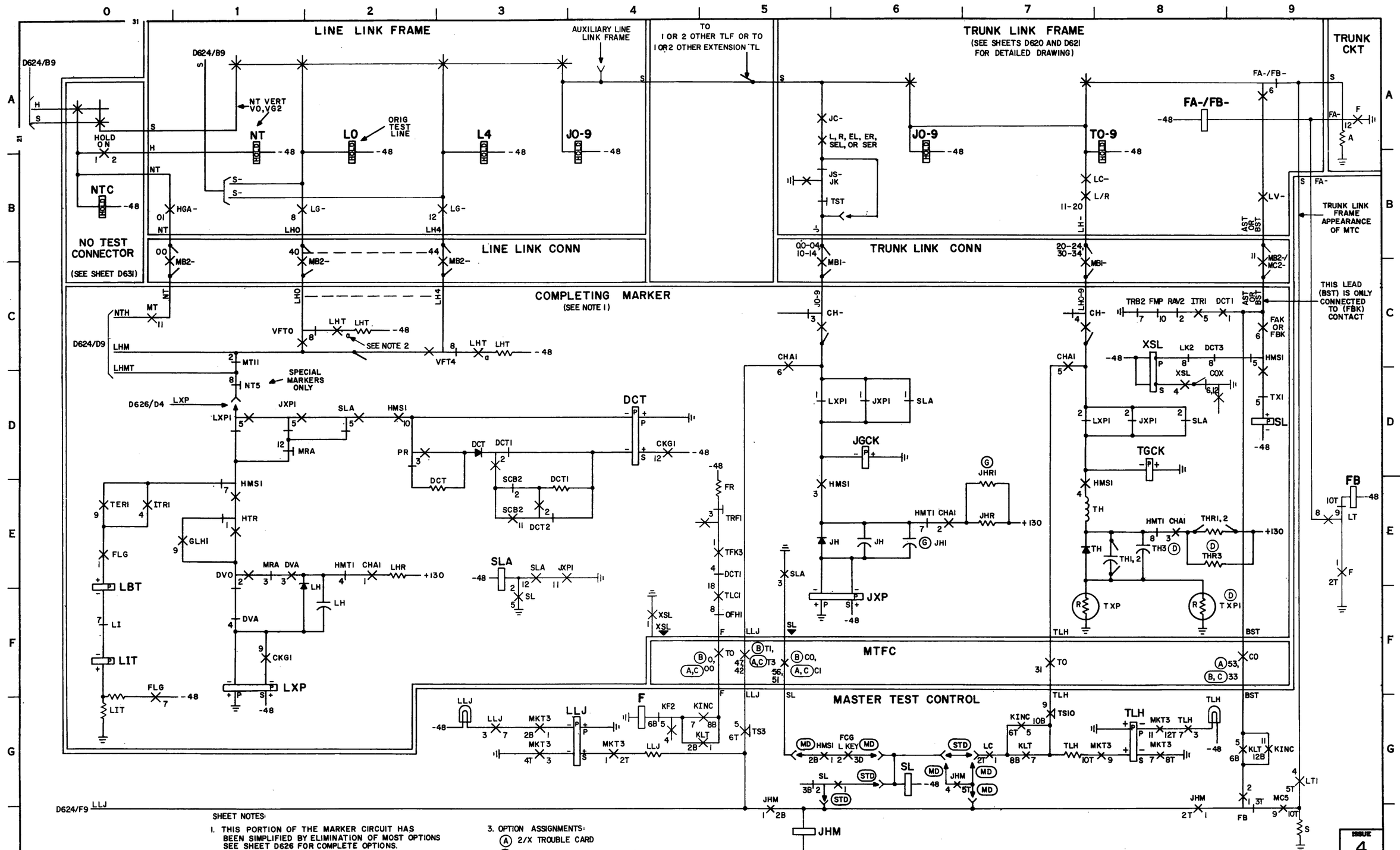

SFD-10-01-D625

COMPLETING MARKER

OPT	FEATURE
D	TRIPLE TL PROVIDED
G	PAIRED LL OPERATION
N	NO PAIRED LL & 2ND EXT. TL PROVIDED
P	NO PAIRED LL & NO 2ND EXT. TL PROVIDED
Q	PLL & NO 2ND EXT. TL PROVIDED
R	NO TRIPLE TL OPERATION
S	NO TL WITH 12 LEVEL SWITCHES
T	ALL TL WITH 12 LEVEL SWITCHES
U	ANY BUT NOT ALL TL WITH 12 LEVEL SWITCHES
W	316 TYPE POLAR RELAYS (STD)
X	NO PAIRED LL OPERATION
Y	PAIRED LL & 2ND EXT. TLF PROVIDED

MARKER CIRCUIT ON D625 SHOWS OPTIONS "P,R,S, & X"

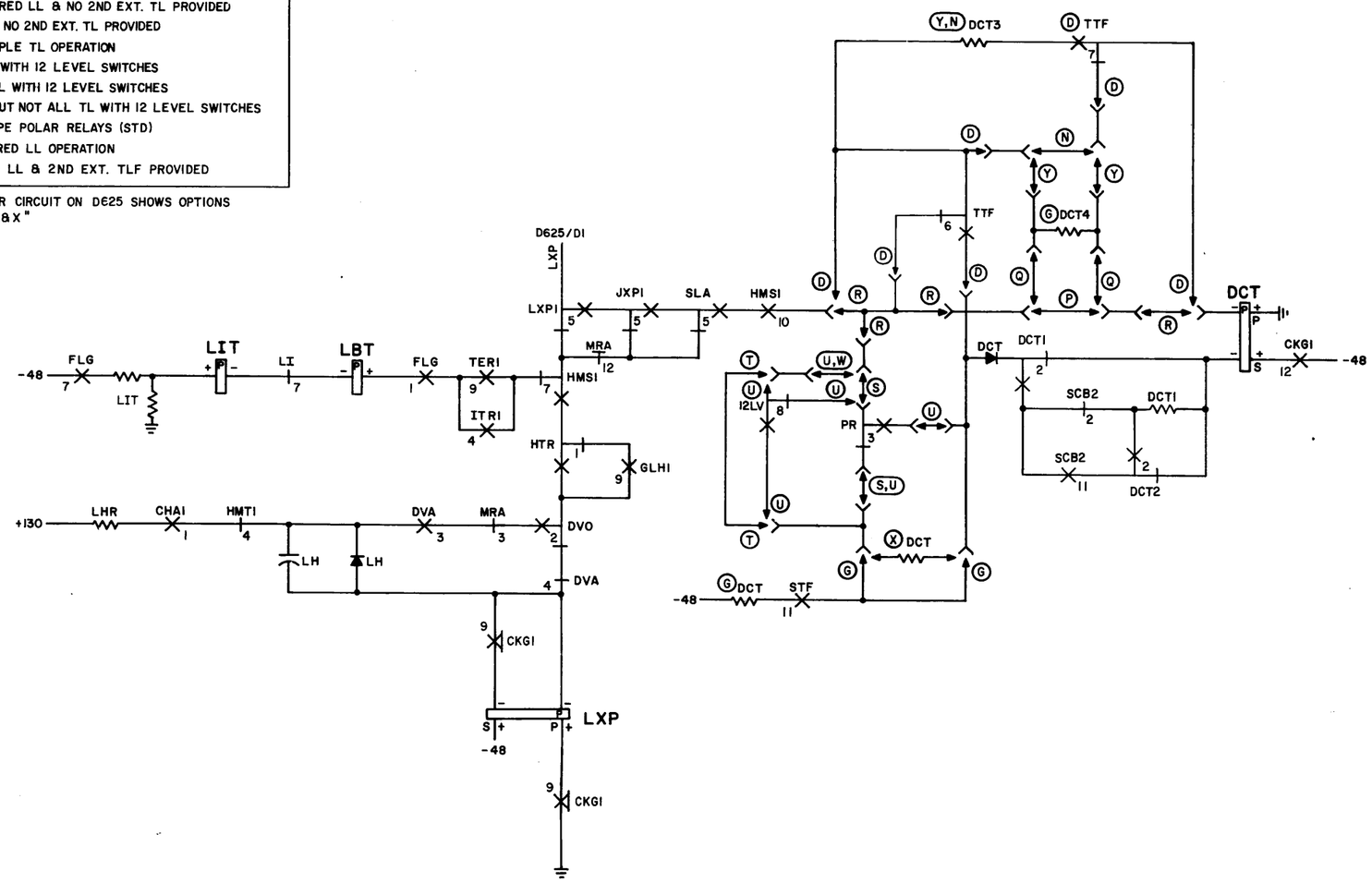

ISSUE 4	
SFD-10-01-D626	OPTIONAL ARRANGEMENTS FOR HOLD MAGNET OPERATION
PRINTED IN U.S.A.	SIZE CODE 6S — BELL TELEPHONE LABORATORIES INCORPORATED

SFD-10-01-D626

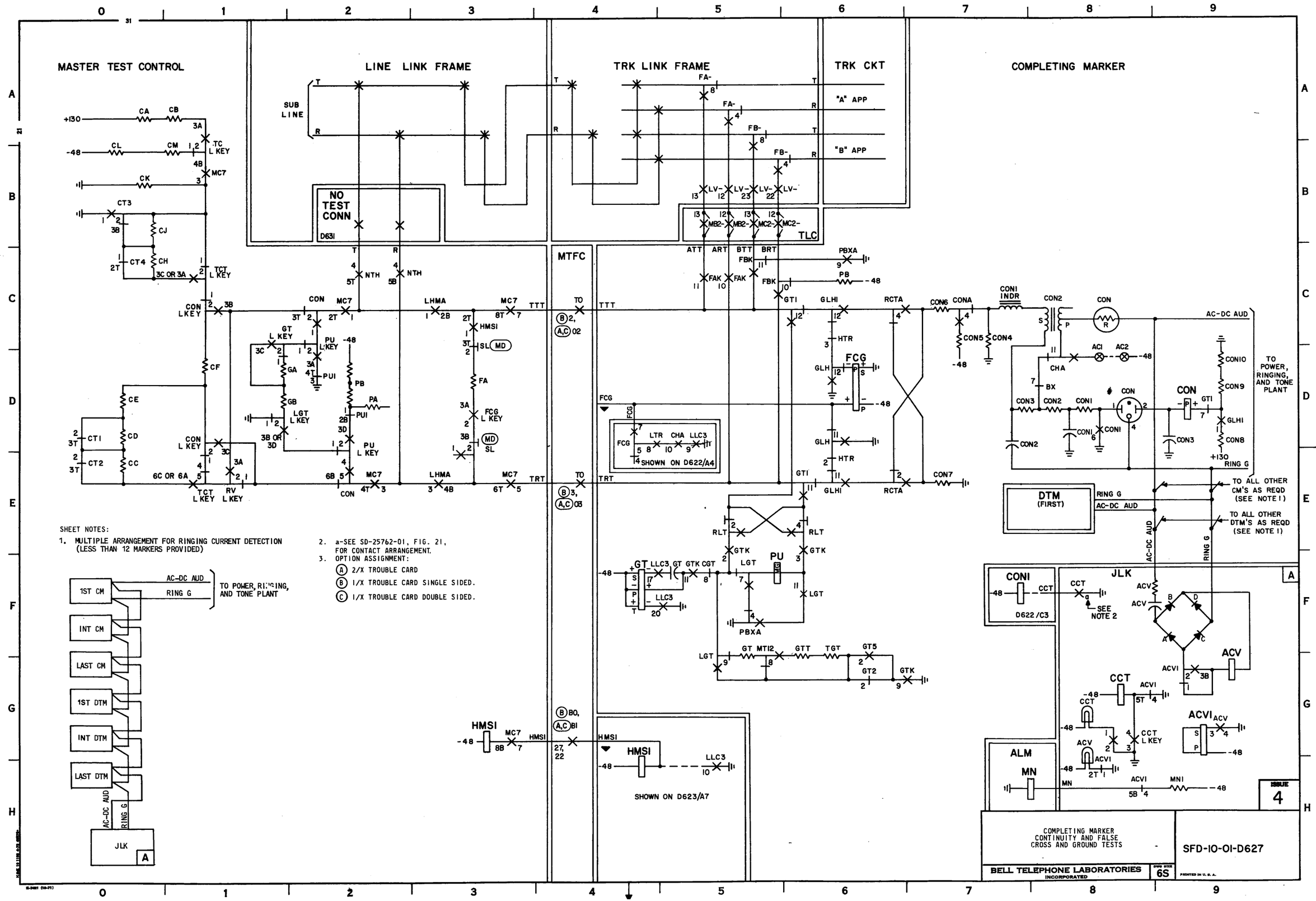

SHEET NOTES:

1. MULTIPLE ARRANGEMENT FOR RINGING CURRENT DETECTION (LESS THAN 12 MARKERS PROVIDED)
2. a-SEE SD-25762-01, FIG. 21, FOR CONTACT ARRANGEMENT.
3. OPTION ASSIGNMENT:
   - (A) 2/X TROUBLE CARD
   - (B) 1/X TROUBLE CARD SINGLE SIDED.
   - (C) 1/X TROUBLE CARD DOUBLE SIDED.

SFD-10-01-D627

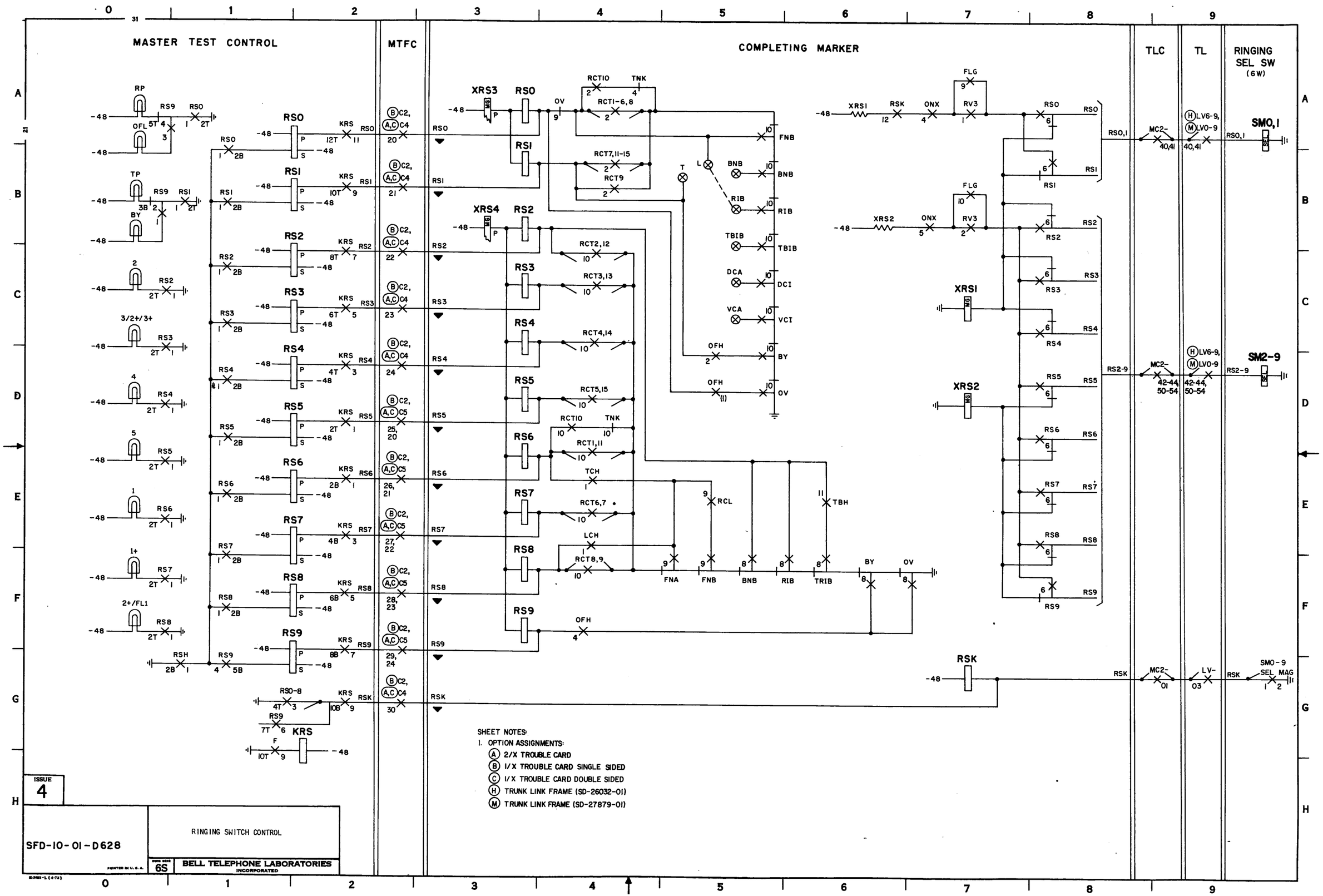
MASTER TEST CONTROL
MTFC
COMPLETING MARKER
TLC
TL
RINGING SEL SW (6W)
RP
OFL
TP
BY
3/2+/3+
1+
2+/FL1
RS0
RS1
RS2
RS3
RS4
RS5
RS6
RS7
RS8
RS9
RSH
RSK
KRS
XRS3
XRS4
XRS1
XRS2
RCT10
TNK
RCT1-6,8
RCT7,11-15
RCT9
RCT2,12
RCT3,13
RCT4,14
RCT5,15
RCT1,11
TCH
RCT6,7
LCH
RCT8,9
OFH
OV
FNB
BNB
RIB
TBIB
DCI
VCI
DCA
VCA
RCL
TBH
FNA
TRIB
FLG
RV3
ONX
MC2-
LV-
LV0-9
LV6-9
SMO,1
SM2-9
SMO-9 SEL MAG
RSO-8
SHEET NOTES:
1. OPTION ASSIGNMENTS:
(A) 2/X TROUBLE CARD
(B) 1/X TROUBLE CARD SINGLE SIDED
(C) 1/X TROUBLE CARD DOUBLE SIDED
(H) TRUNK LINK FRAME (SD-26032-01)
(M) TRUNK LINK FRAME (SD-27879-01)
ISSUE 4
SFD-10-01-D628
RINGING SWITCH CONTROL
BELL TELEPHONE LABORATORIES INCORPORATED
6S
SFD-10-01-D628

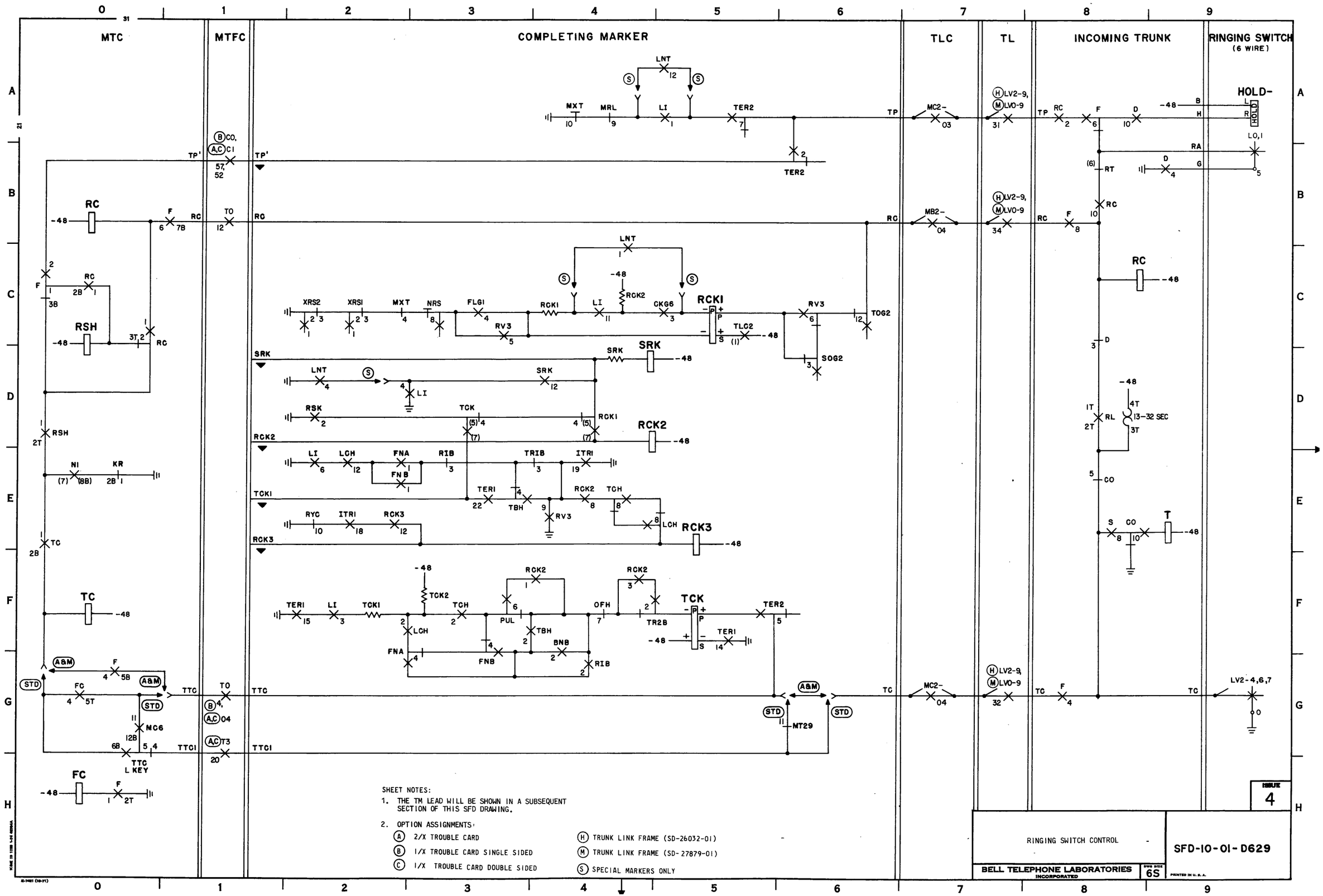

SFD-10-01-D629

COMPLETING MARKER

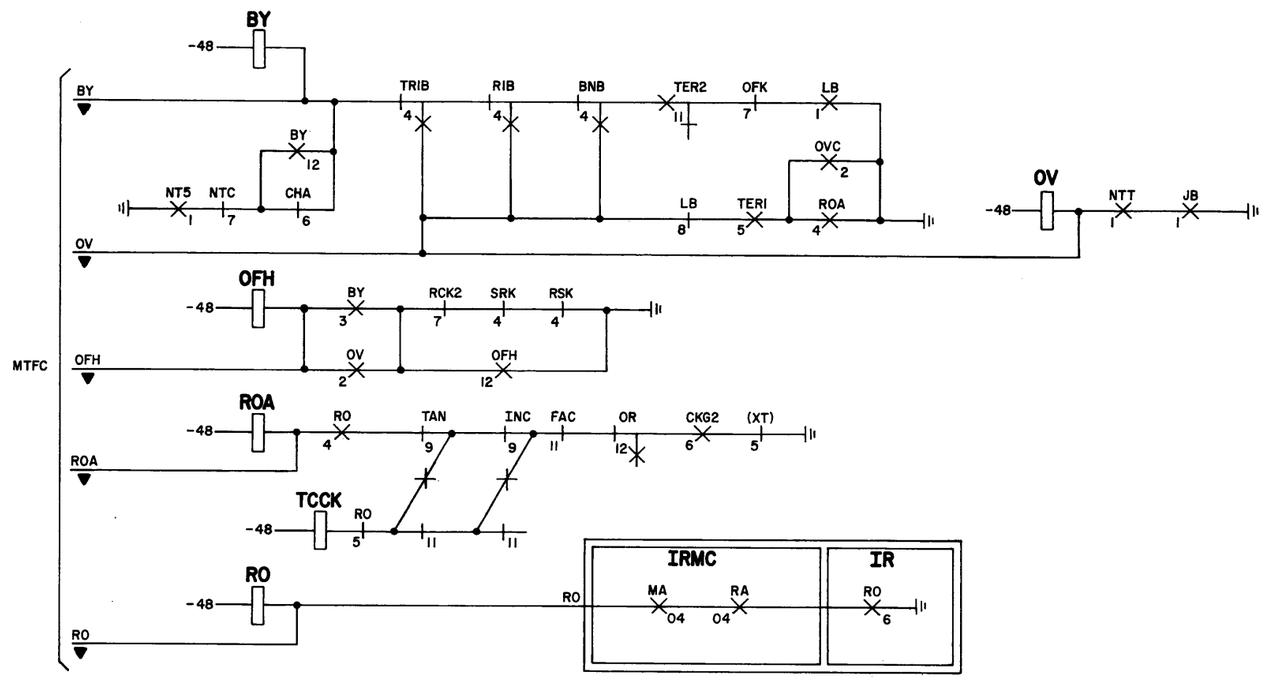

ISSUE 4

SFD-10-01-D630

RINGING SWITCH CONTROL

PRINTED IN U. S. A.

STOCK SIZE 6S

BELL TELEPHONE LABORATORIES INCORPORATED

SFD-10-01-D630

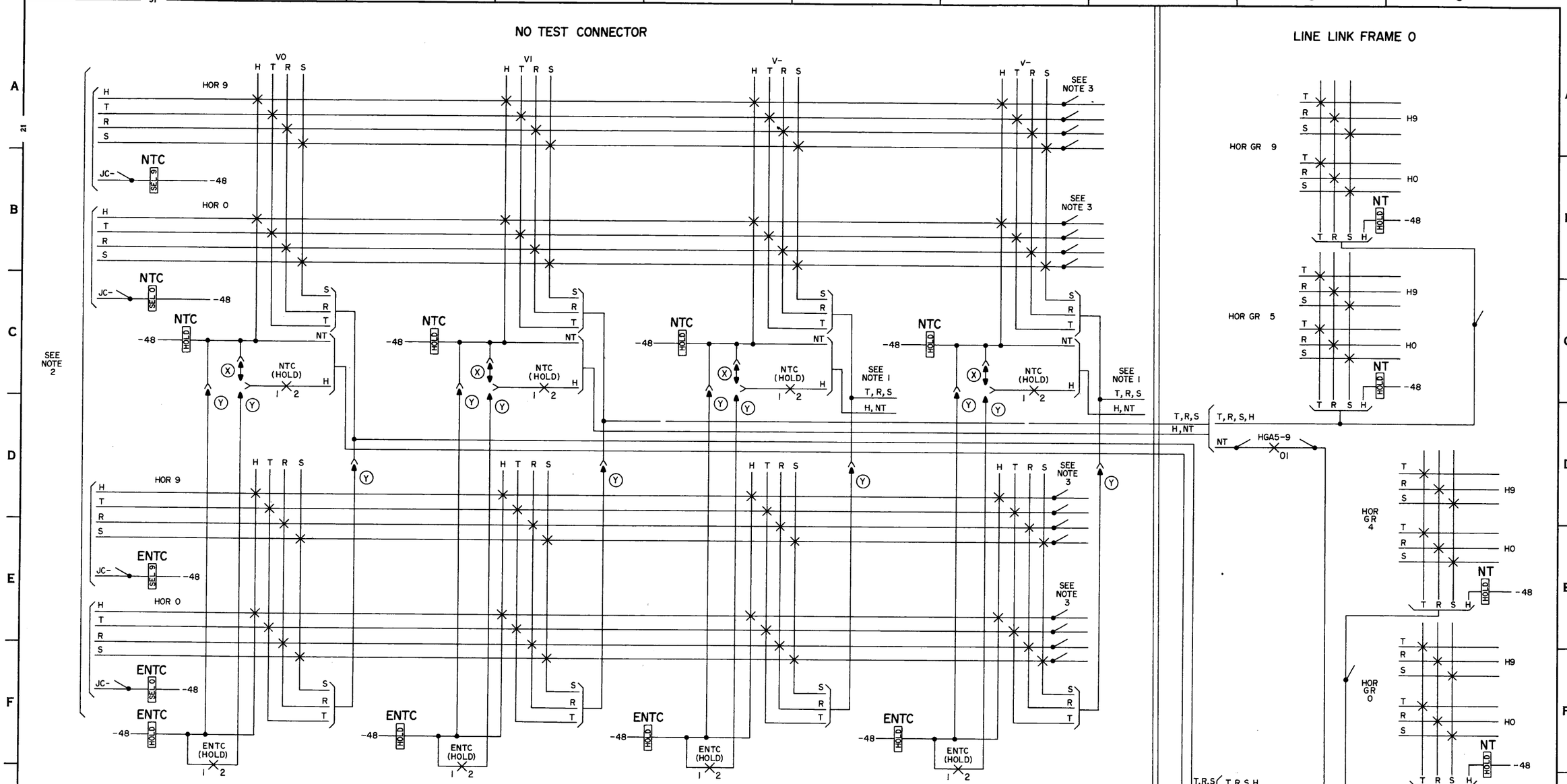

SHEET NOTES:

1. DISTRIBUTION OF (NTC) SWITCH VERTICALS TO LINE LINK FRAME. HORIZONTAL LINE GROUP NO TEST VERTICALS.

NTC SWITCH													LINE LINK NO TEST VERTICAL HORIZONTAL LINE GROUP
VERTICAL	1ST	2ND	3RD	4TH	5TH	6TH	7TH	8TH	9TH	10TH	11TH	12TH	
	LINE LINK FRAME												
00	00	05	10	15	20	25	30	35	40	45	50	55	0-4
01													5-9
02	01	06	11	16	21	26	31	36	41	46	51	56	0-4
03													5-9
04	02	07	12	17	22	27	32	37	42	47	52	57	0-4
05													5-9
06	03	08	13	18	23	28	33	38	43	48	53	58	0-4
07													5-9
08	04	09	14	19	24	29	34	39	44	49	54	59	0-4
09													5-9

WHERE MORE THAN FORTY LINE LINK FRAMES ARE REQUIRED, THE JC- LEADS SHALL BE ASSIGNED AND MULTIPLED TO OTHER SWITCHES AS FOLLOWS:

FROM JC LEAD NO.	TO SWITCH ASSOC WITH LL FRAMES	TO SWITCH ASSOC WITH LL FRAMES
0	00-04	—
1	05-09	—
2	10-14	—
3	15-19	—
4	20-24	40-44
5	25-29	45-49
6	30-34	50-54
7	35-39	55-59

2. ASSIGN LEVELS AS REQUIRED TO:
   DSA BD - NO TEST TRUNKS
   LTD - NO TEST TRUNKS
   MASTER TEST CONTROL
   LIT
   ETC.

3. MULTIPLE TO CORRESPONDING LEVELS OF OTHER NO TEST SWITCHES.
   (X) 10 OR LESS NT TRUNK APPEARANCES REQUIRED.
   (Y) MORE THAN 10 NT TRUNK APPEARANCES REQUIRED.

ISSUE 4

NO TEST CONNECTOR

SFD-10-01-D631

BELL TELEPHONE LABORATORIES INCORPORATED

DWG SIZE 6S

PRINTED IN U.S.A.

SFD-10-01-D631

E-7421 (10-71)

ESTABLISHING INCOMING TRUNK CONNECTION

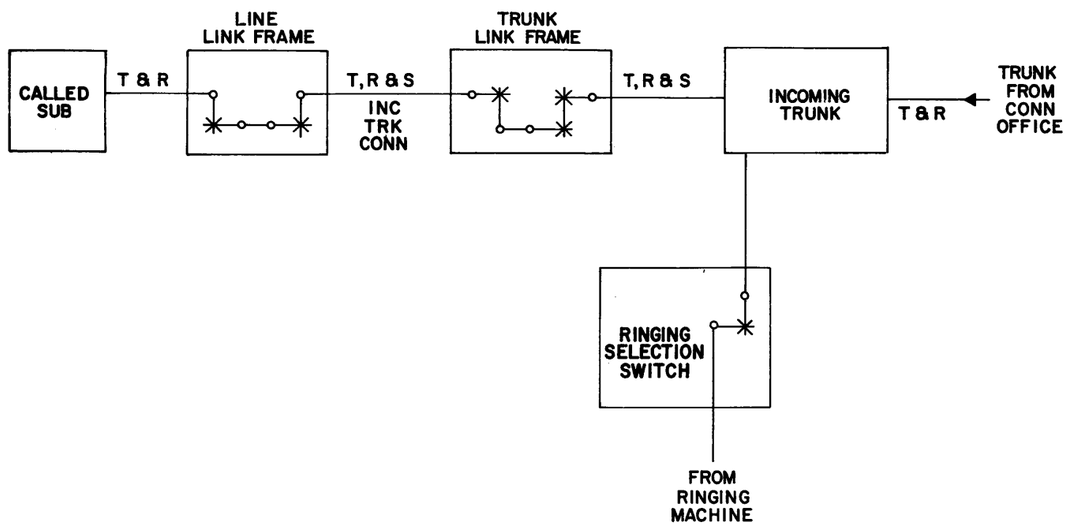

INDEX

CAUTION!

DUE TO THE SIMPLIFIED NATURE OF THIS DOCUMENT, INFORMATION SHOWN MAY NOT BE COMPLETE.

ISSUE 3

PART D7
COMPLETING MARKER RELEASE,
RINGING CALLED SUBSCRIBER
AND DISCONNECT

SFD - 10 - 01 - D701

BELL TELEPHONE LABORATORIES INCORPORATED

DWG SIZE 6S

PRINTED IN U. S. A.

SFD-10-01-D701

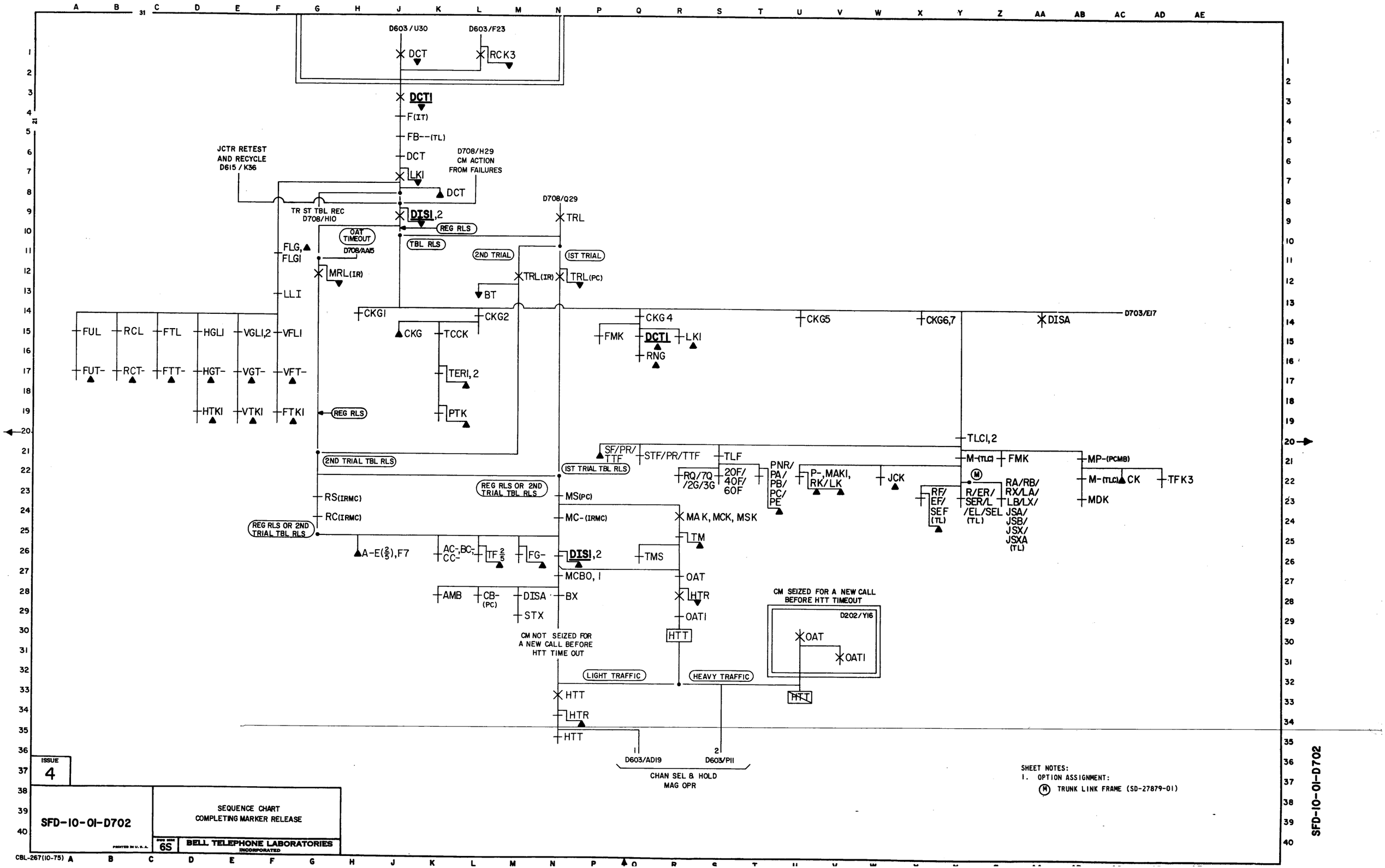
D603/U30
D603/F23
DCT
RCK3
DCTI
F(IT)
FB--(TL)
DCT
LKI
DCT
JCTR RETEST AND RECYCLE D615/K36
D708/H29 CM ACTION FROM FAILURES
TR ST TBL REC D708/H10
DTSI,2
REG RLS
TBL RLS
OAT TIMEOUT D708/AA15
FLG,
FLGI
MRL(IR)
LLI
D708/Q29
TRL
2ND TRIAL
IST TRIAL
TRL(IR)
TRL(PC)
BT
CKGI
CKG2
CKG
TCCK
CKG4
DCTI
LKI
RNG
FMK
CKG5
CKG6,7
DISA
D703/E17
FUL
RCL
FTL
HGLI
VGLI,2
VFLI
FUT-
RCT-
FTT-
HGT-
VGT-
VFT-
HTKI
VTKI
FTKI
REG RLS
TERI,2
PTK
2ND TRIAL TBL RLS
IST TRIAL TBL RLS
SF/PR/TTF
STF/PR/TTF
TLF
RQ/7Q/2G/3G
20F/40F/60F
PNR/PA/PB/PC/PE
P-,MAKI,RK/LK
JCK
TLCI,2
M-(TLC)
FMK
MP-(PCMB)
M-(TLC)
CK
TFK3
MDK
RF/EF/SEF (TL)
R/ER/SER/L/EL/SEL (TL)
RA/RB/RX/LA/LB/LX/JSA/JSB/JSX/JSXA (TL)
REG RLS OR 2ND TRIAL TBL RLS
RS(IRMC)
RC(IRMC)
MS(PC)
MC-(IRMC)
MAK, MCK, MSK
TM
A-E(2/5),F7
AC-,BC-,CC-
TF 2/5
FG-
DISI,2
TMS
MCBO,1
OAT
AMB
CB-(PC)
DISA
BX
HTR
STX
OATI
HTT
CM NOT SEIZED FOR A NEW CALL BEFORE HTT TIME OUT
CM SEIZED FOR A NEW CALL BEFORE HTT TIMEOUT
D202/Y16
OAT
OATI
HTT
LIGHT TRAFFIC
HEAVY TRAFFIC
HTT
HTR
HTT
1 D603/AD19
2 D603/P11
CHAN SEL & HOLD MAG OPR
SHEET NOTES:
1. OPTION ASSIGNMENT:
M TRUNK LINK FRAME (SD-27879-01)
ISSUE 4
SFD-10-01-D702
SEQUENCE CHART
COMPLETING MARKER RELEASE
6S
BELL TELEPHONE LABORATORIES INCORPORATED
CBL-267(10-75)
SFD-10-01-D702

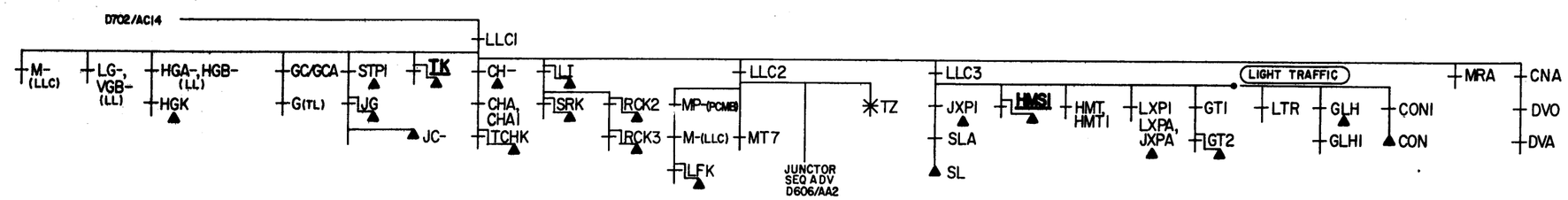

ISSUE 3

SEQUENCE CHART
COMPLETING MARKER RELEASE

SFD-10-01-D703

BELL TELEPHONE LABORATORIES INCORPORATED

DWG SIZE 6S

PRINTED IN U.S.A.

SFD-10-01-D703

COMPLETING MARKER

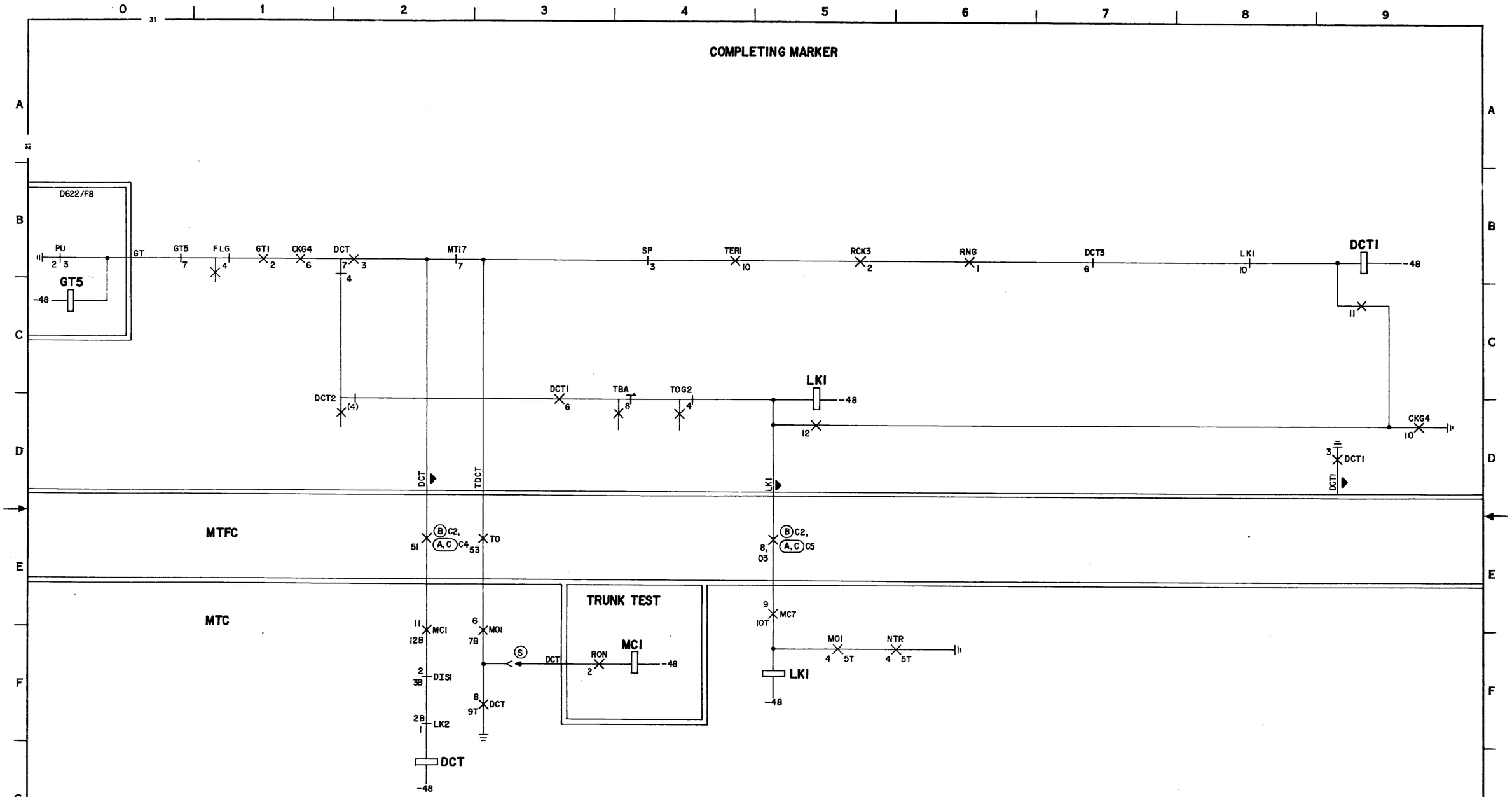

SHEET NOTES:

1. OPTION ASSIGNMENTS:
   - (A) 2/X TROUBLE CARD
   - (B) 1/X TROUBLE CARD SINGLE SIDED
   - (C) 1/X TROUBLE CARD DOUBLE SIDED
   - (S) AUTOMATIC RECYCLE OF TRUNK TEST

ISSUE 4

SFD-10-01-D704

COMPLETING MARKER RELEASE

DWG SIZE 6S

BELL TELEPHONE LABORATORIES INCORPORATED

PRINTED IN U.S.A.

CBL-266(10-75)

SFD-10-01-D704

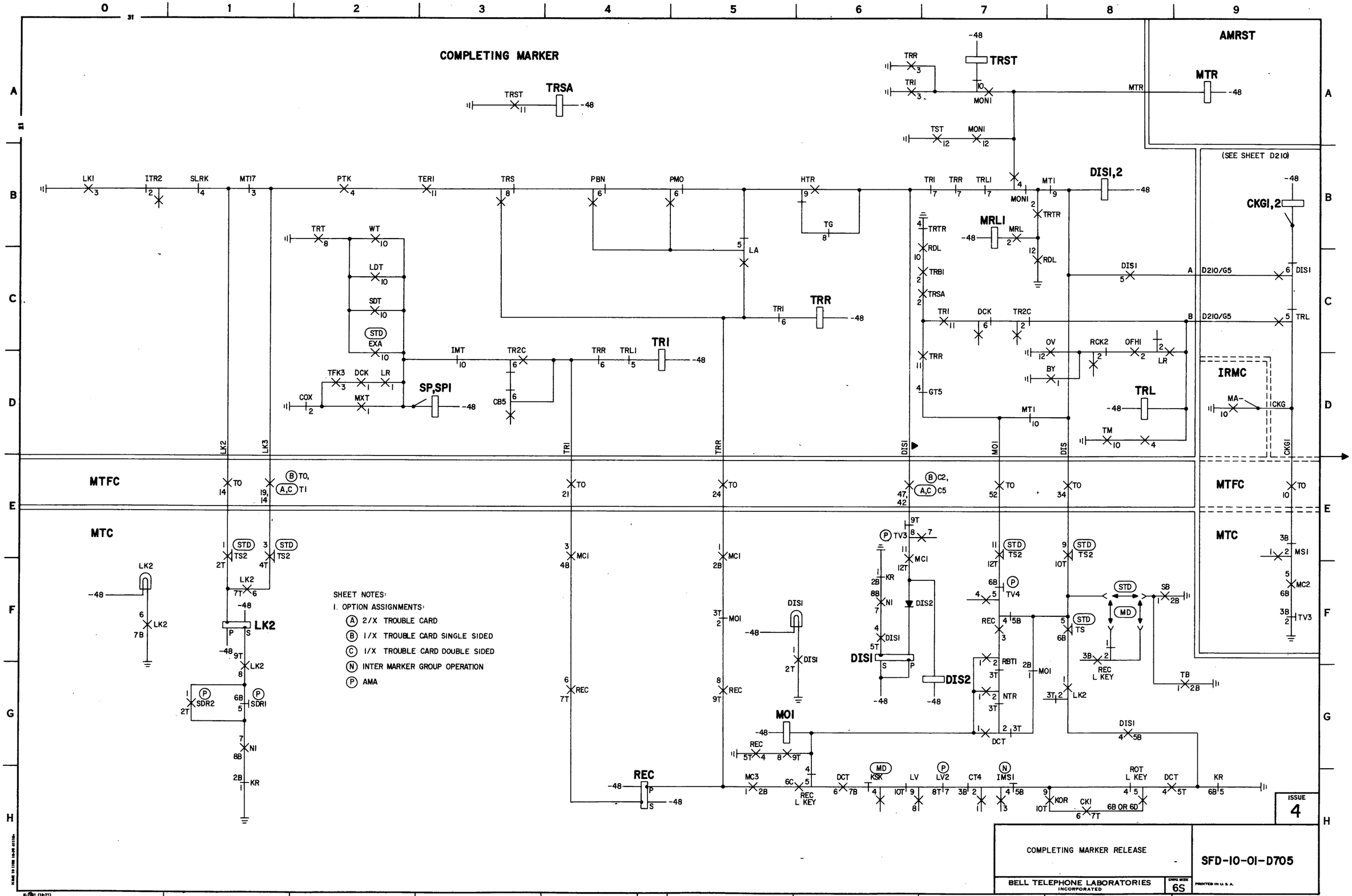

SFD-10-01-D705

PARTY	RINGING COMBINATION (6 WIRE SW)	RS (SEL SW)	RINGING CURRENT TO TRUNK LEADS T	RINGING CURRENT TO TRUNK LEADS R	TRANSMITTED TO CALLING SUBSCRIBER
1	1	0,6	RING GRD	CODE 1 GEN	AUD RING
PBX	10				
2	11	1,6	CODE 1 GEN	RING GRD	
3	6	0,7	RING GRD	CODE 1+	AUD RING
4	7	1,7	CODE 11	RING GRD	AUD RING
BUSY		1,9			60 IPM LOW TONE
OVERFLOW		0,9			120 IPM LOW TONE
REG INTERCEPT		0,2	RING GRD	AC-DC AUD OR SUP-AUD	AUD RING
TRL INTERCEPT		1,2	AC-DC AUD OR SUP-AUD	RING GRD	AUD RING

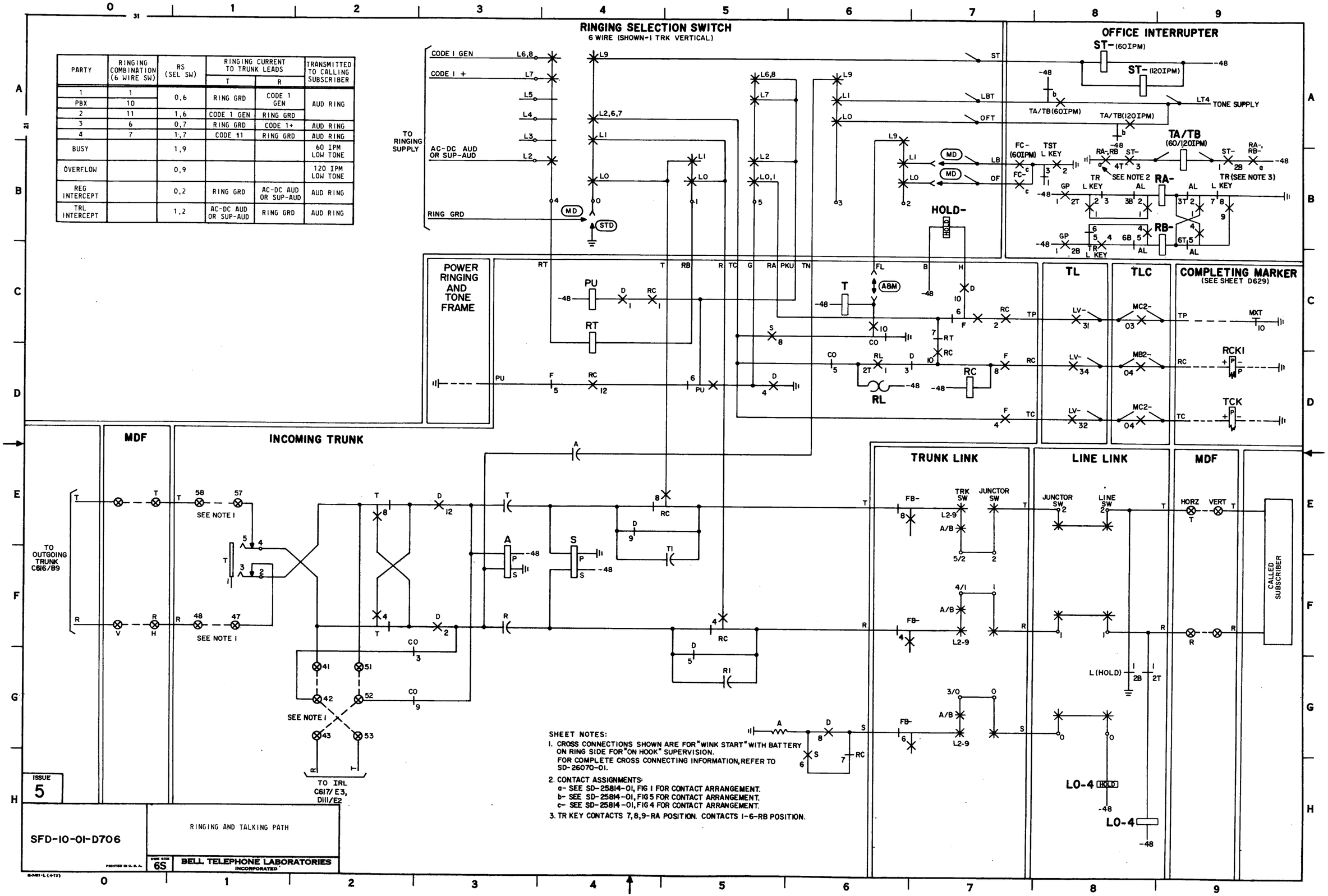

RINGING AND SUBSCRIBER DISCONNECT

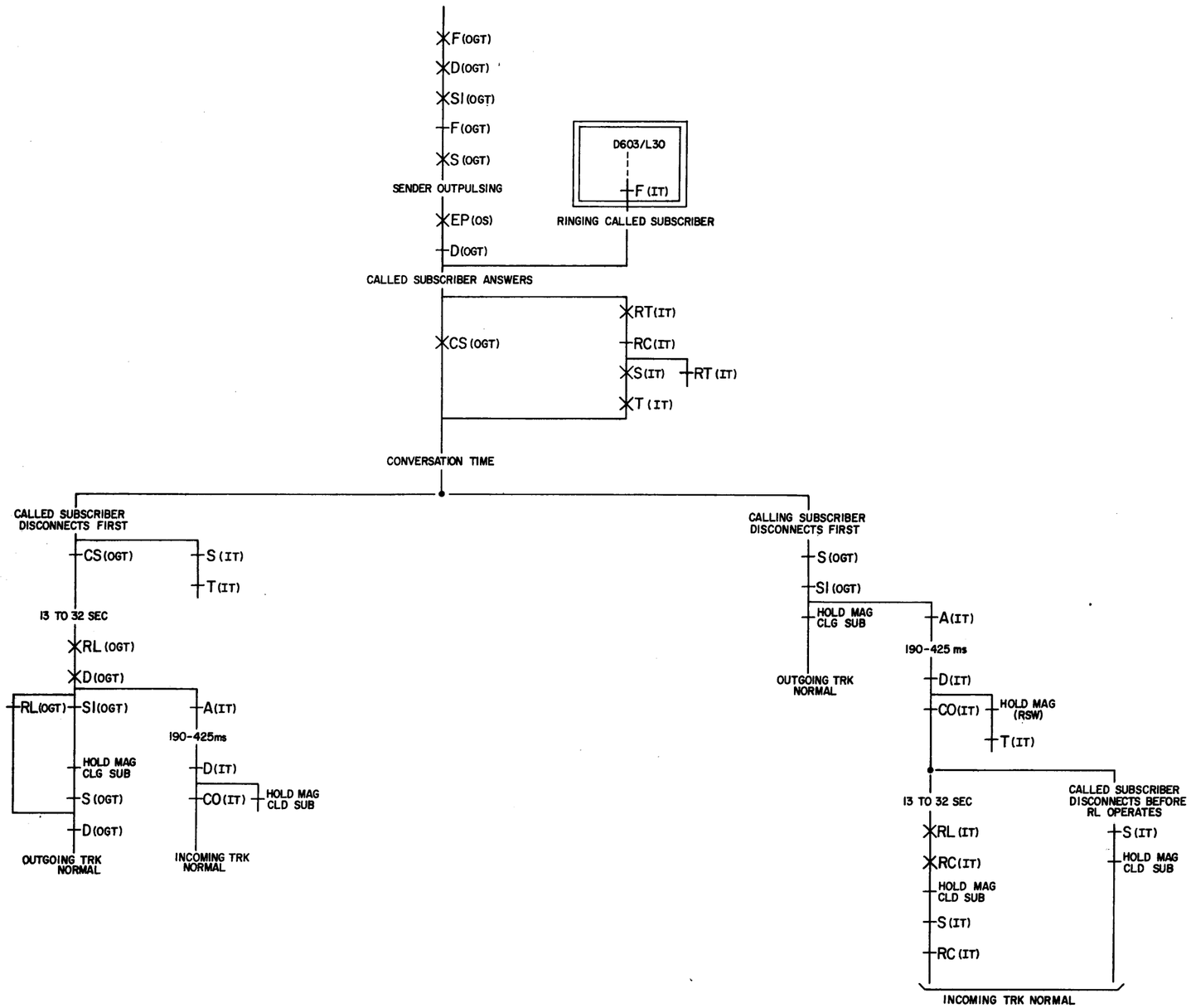

ISSUE 3

SEQUENCE CHART
RINGING AND SUBSCRIBER DISCONNECT

SFD-10-01-D707

BELL TELEPHONE LABORATORIES INCORPORATED

DWG SHEET 6S

PRINTED IN U.S.A.

SFD-10-01-D707

BRUNING 44-131 24/092

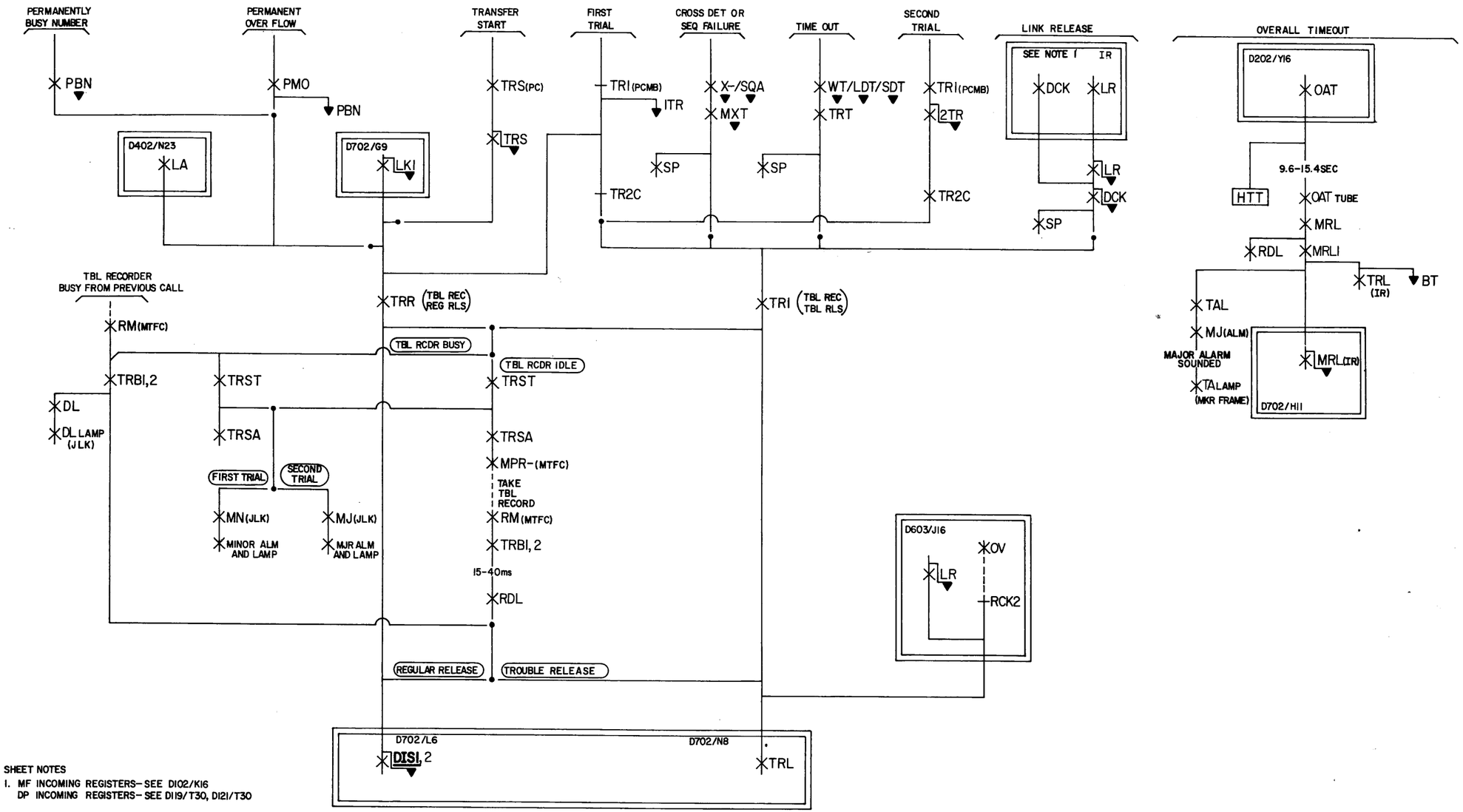

SHEET NOTES

1. MF INCOMING REGISTERS—SEE D102/K16
   DP INCOMING REGISTERS—SEE D119/T30, D121/T30

ISSUE 4

SFD-10-01-D708

SEQUENCE CHART
MARKER ACTION FROM FAILURES
(INCOMING)

DWG SIZE 6S

BELL TELEPHONE LABORATORIES INCORPORATED

PRINTED IN U.S.A.

CBL-267(10-75)

SFD-10-01-D708

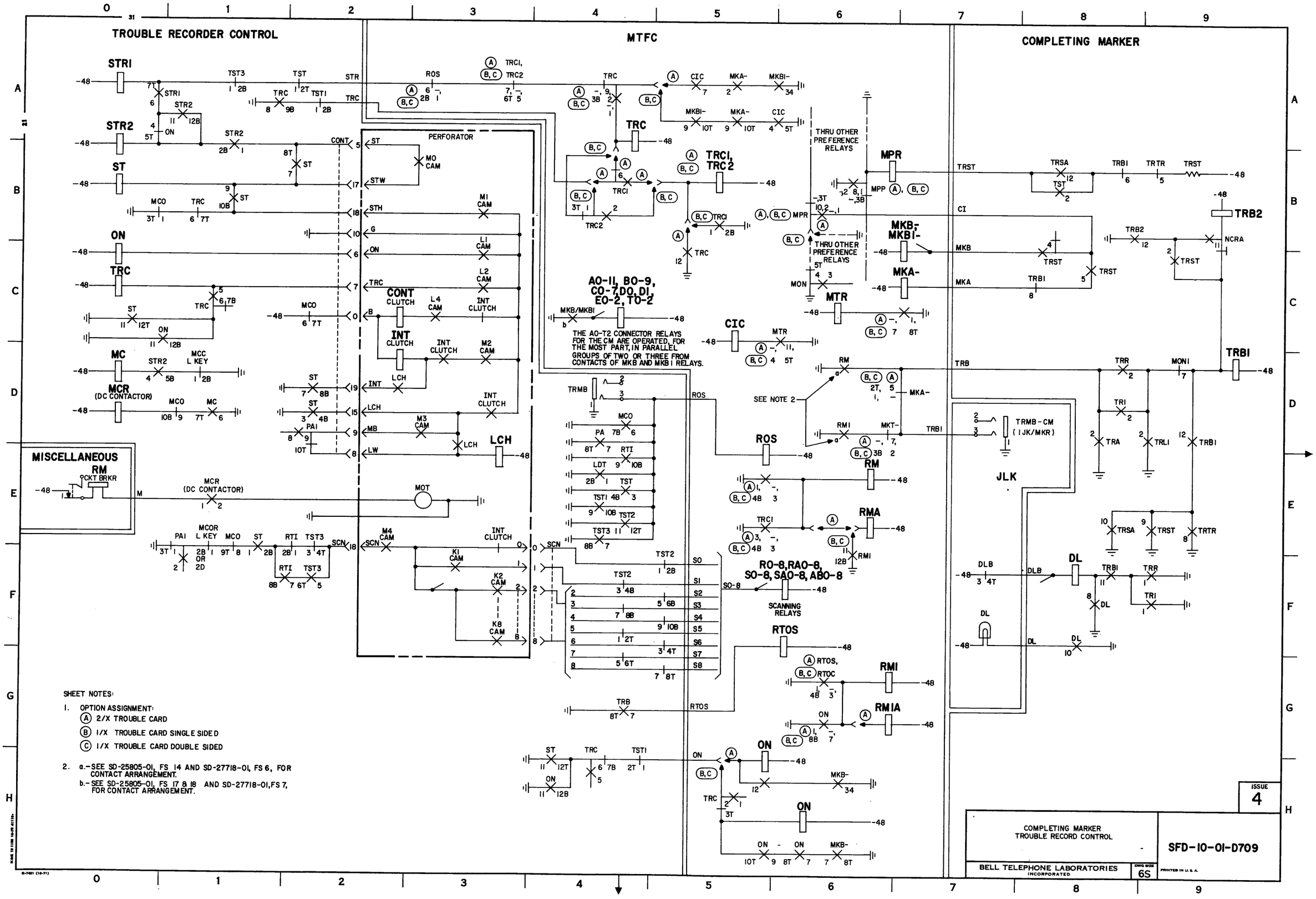

SFD-10-01-D709

ESTABLISHING INCOMING TRUNK CONNECTION, SPECIAL CALLS

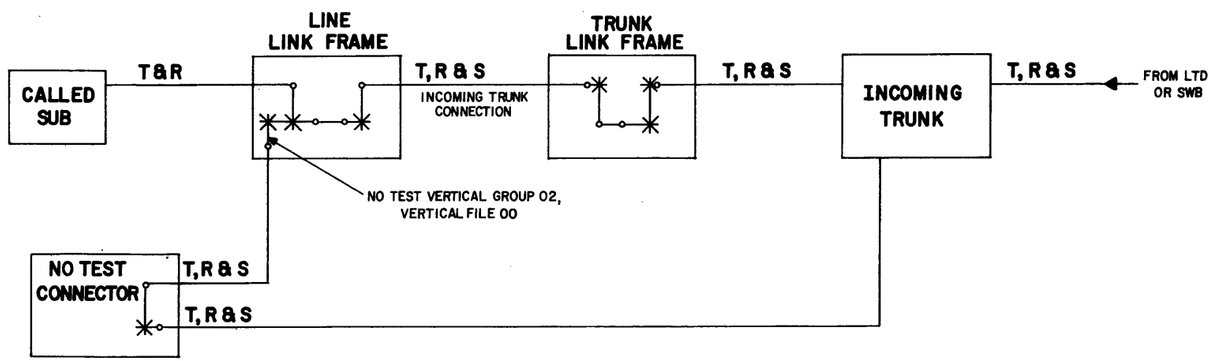

INDEX

CAUTION!

DUE TO THE SIMPLIFIED NATURE OF THIS DOCUMENT, INFORMATION SHOWN MAY NOT BE COMPLETE.

SPECIAL HUNT, NO HUNT, AND NO TEST

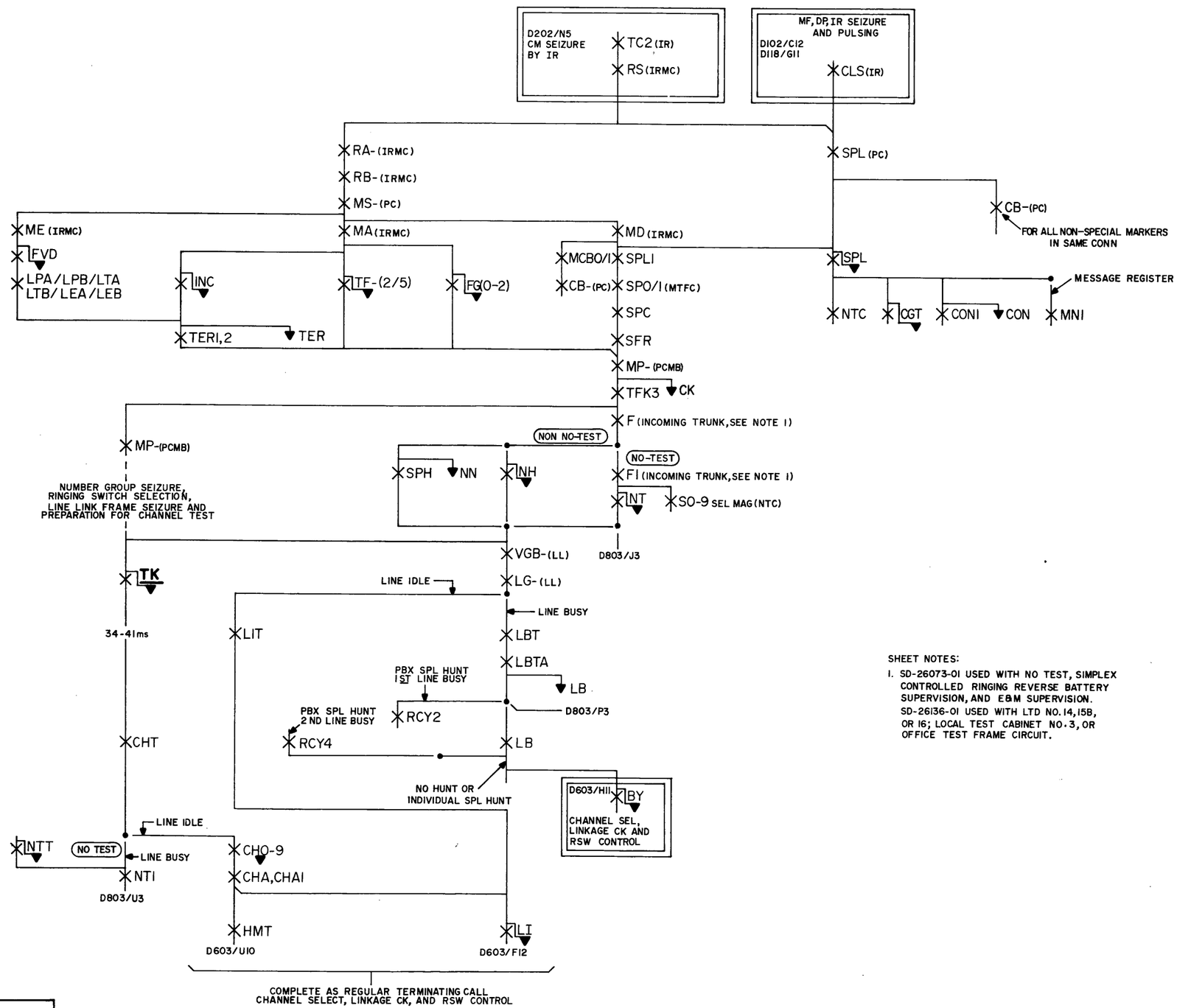

SHEET NOTES:

1. SD-26073-01 USED WITH NO TEST, SIMPLEX CONTROLLED RINGING REVERSE BATTERY SUPERVISION, AND E&M SUPERVISION.
   SD-26136-01 USED WITH LTD NO. 14, 15B, OR 16; LOCAL TEST CABINET NO. 3, OR OFFICE TEST FRAME CIRCUIT.

ISSUE 3

SFD-10-01-D802

SEQUENCE CHART
SPECIAL CALLS

DWG SIZE 6S

BELL TELEPHONE LABORATORIES
INCORPORATED

PRINTED IN U.S.A.

CBL-267(10-75)

SFD-10-01-D802

NO TEST TRAIN

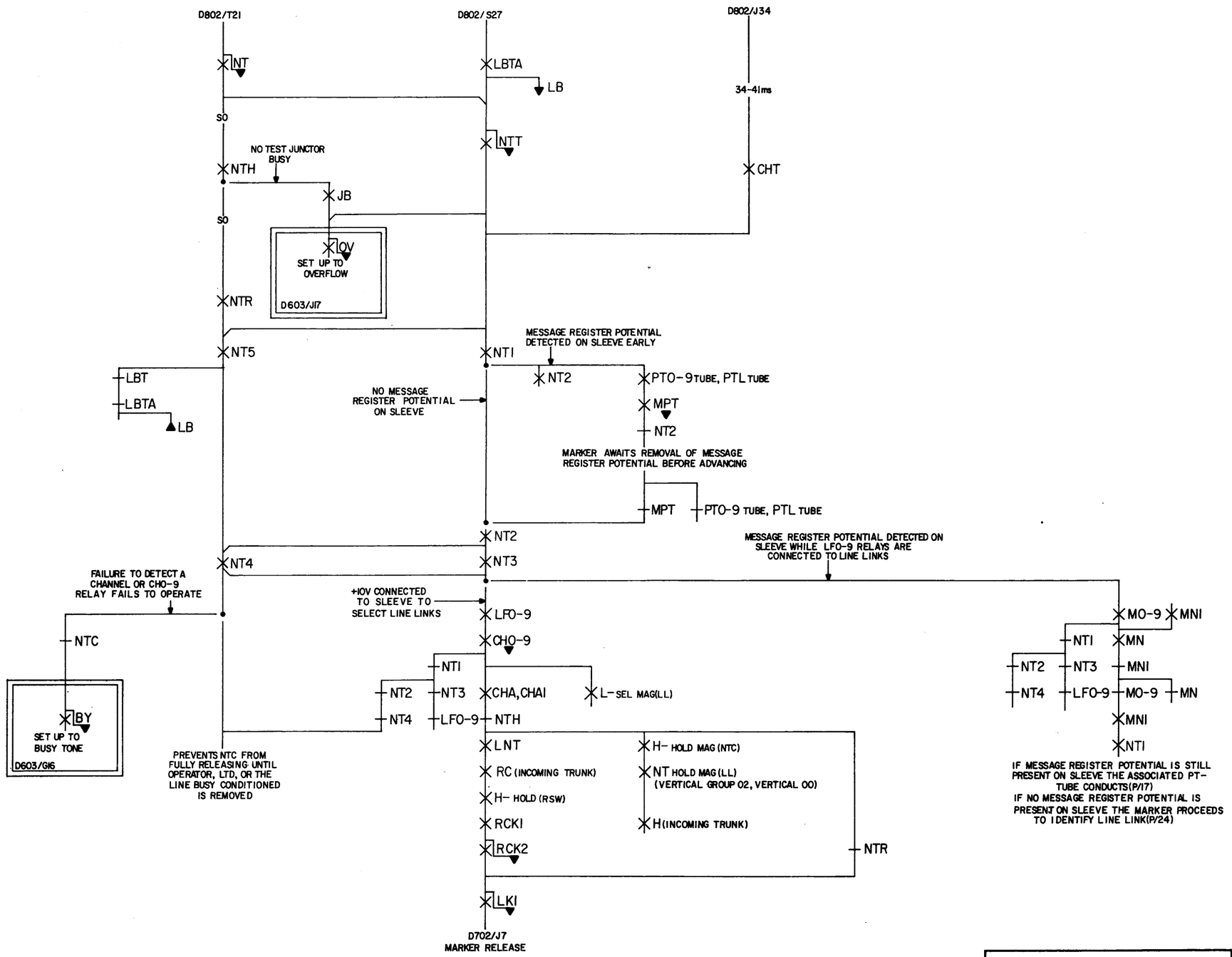

ISSUE 4

SEQUENCE CHART
NO TEST TRAIN

SFD-10-01-D803

BELL TELEPHONE LABORATORIES INCORPORATED

SFD-10-01-D803

BRUNING 44-131 24092

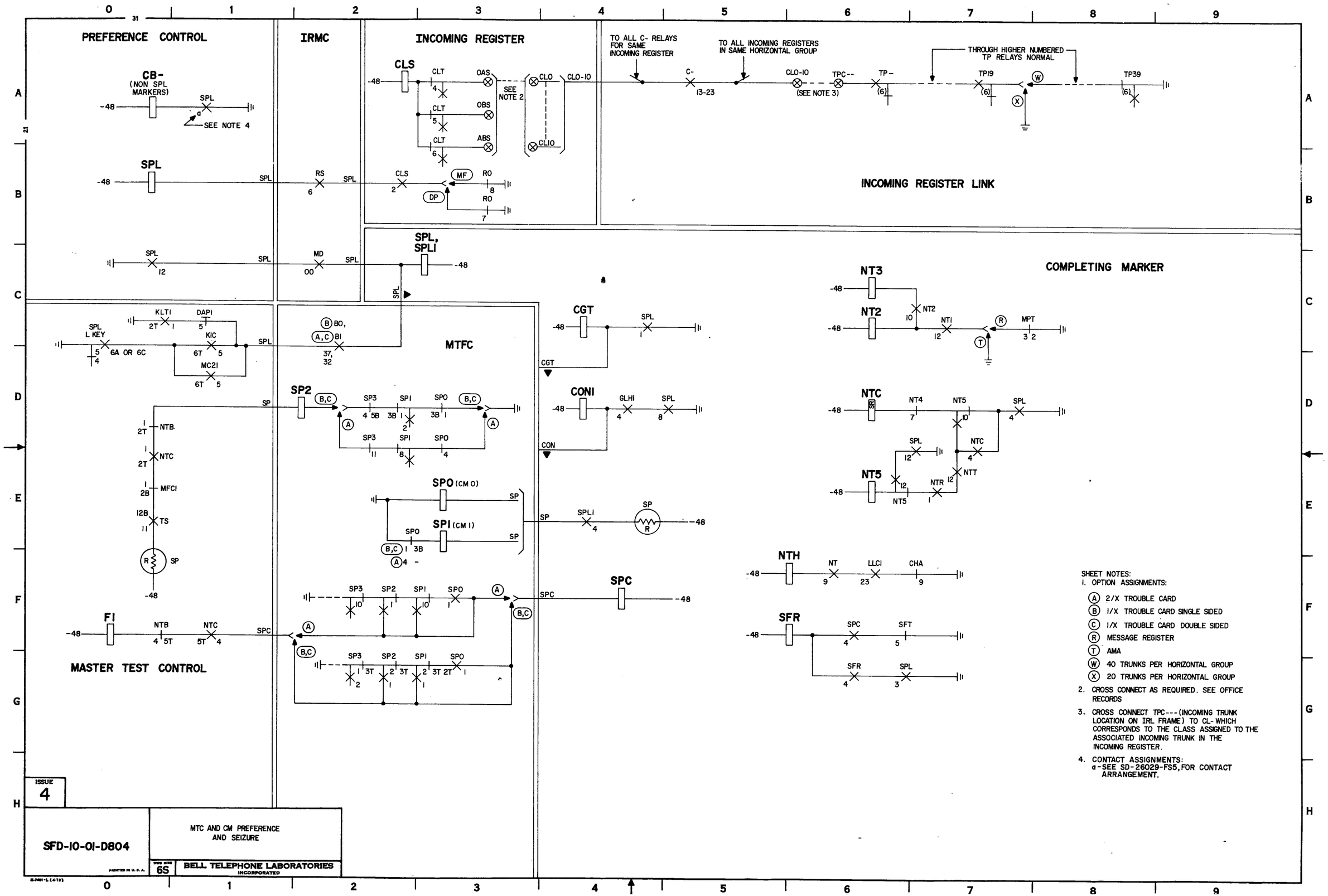
PREFERENCE CONTROL
IRMC
INCOMING REGISTER
INCOMING REGISTER LINK
COMPLETING MARKER
MTFC
MASTER TEST CONTROL
CB-
(NON SPL MARKERS)
SEE NOTE 4
SPL
SPL, SPLI
CLS
SEE NOTE 2
TO ALL C- RELAYS FOR SAME INCOMING REGISTER
TO ALL INCOMING REGISTERS IN SAME HORIZONTAL GROUP
THROUGH HIGHER NUMBERED TP RELAYS NORMAL
(SEE NOTE 3)
NT3
NT2
NTC
NT5
NTH
SFR
CGT
CONI
SP2
SPO (CM O)
SPI (CM I)
SPC
F1
SHEET NOTES:
1. OPTION ASSIGNMENTS:
(A) 2/X TROUBLE CARD
(B) 1/X TROUBLE CARD SINGLE SIDED
(C) 1/X TROUBLE CARD DOUBLE SIDED
(R) MESSAGE REGISTER
(T) AMA
(W) 40 TRUNKS PER HORIZONTAL GROUP
(X) 20 TRUNKS PER HORIZONTAL GROUP
2. CROSS CONNECT AS REQUIRED. SEE OFFICE RECORDS
3. CROSS CONNECT TPC---(INCOMING TRUNK LOCATION ON IRL FRAME) TO CL-WHICH CORRESPONDS TO THE CLASS ASSIGNED TO THE ASSOCIATED INCOMING TRUNK IN THE INCOMING REGISTER.
4. CONTACT ASSIGNMENTS:
α-SEE SD-26029-FS5, FOR CONTACT ARRANGEMENT.
ISSUE 4
SFD-10-01-D804
MTC AND CM PREFERENCE AND SEIZURE
BELL TELEPHONE LABORATORIES INCORPORATED
6S
PRINTED IN U.S.A.
SFD-10-01-D804

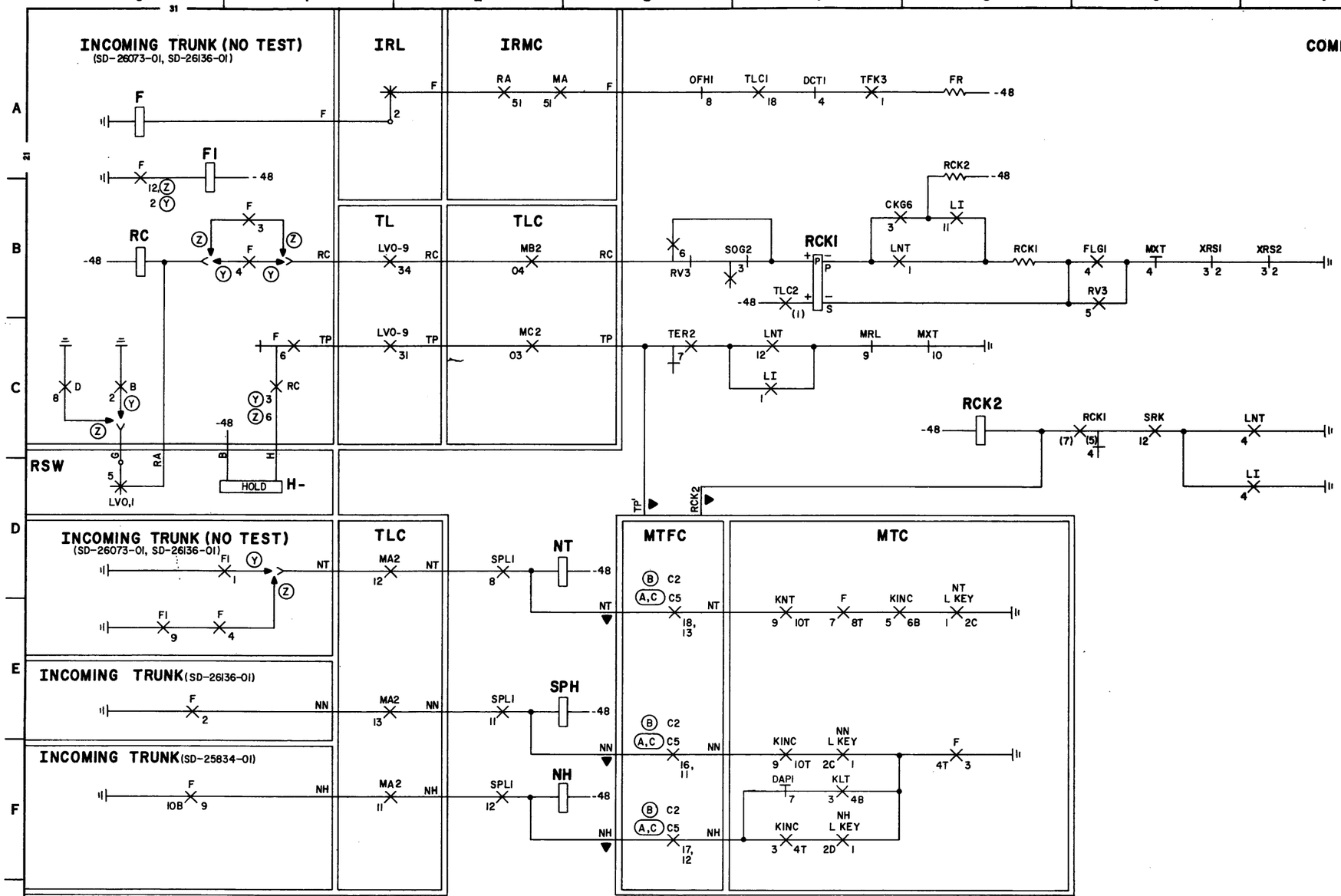

ISSUE 4

INCOMING TRUNK AND RINGING SWITCH CONTROL

SFD-10-01-D805

BELL TELEPHONE LABORATORIES INCORPORATED

6S

PRINTED IN U.S.A.

SFD-10-01-D805

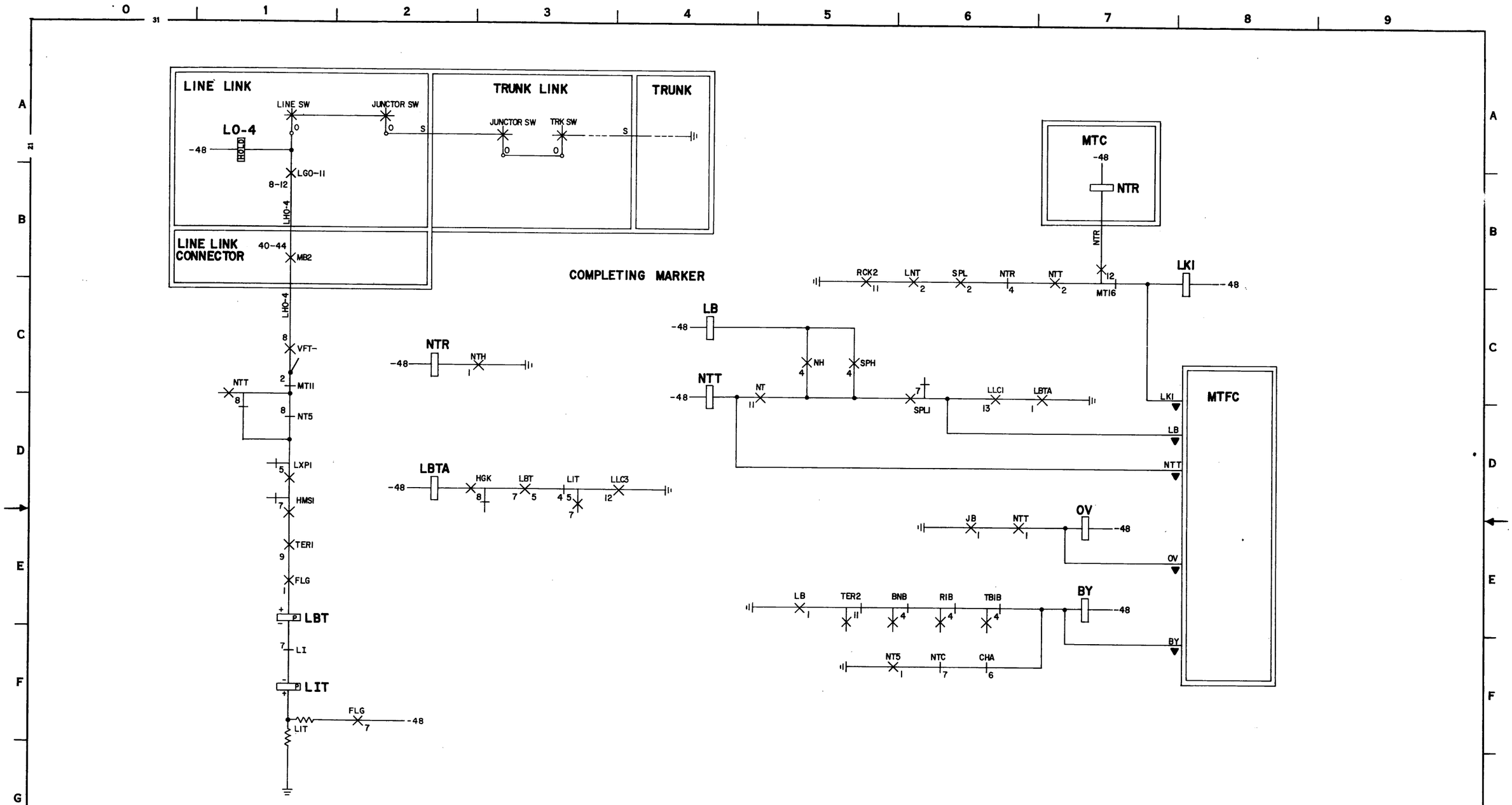

ISSUE 4

SFD-10-01-D806

LINE IDLE AND LINE BUSY TESTS

DWG SIZE 6S

BELL TELEPHONE LABORATORIES INCORPORATED

PRINTED IN U.S.A.

SFD-10-01-D806

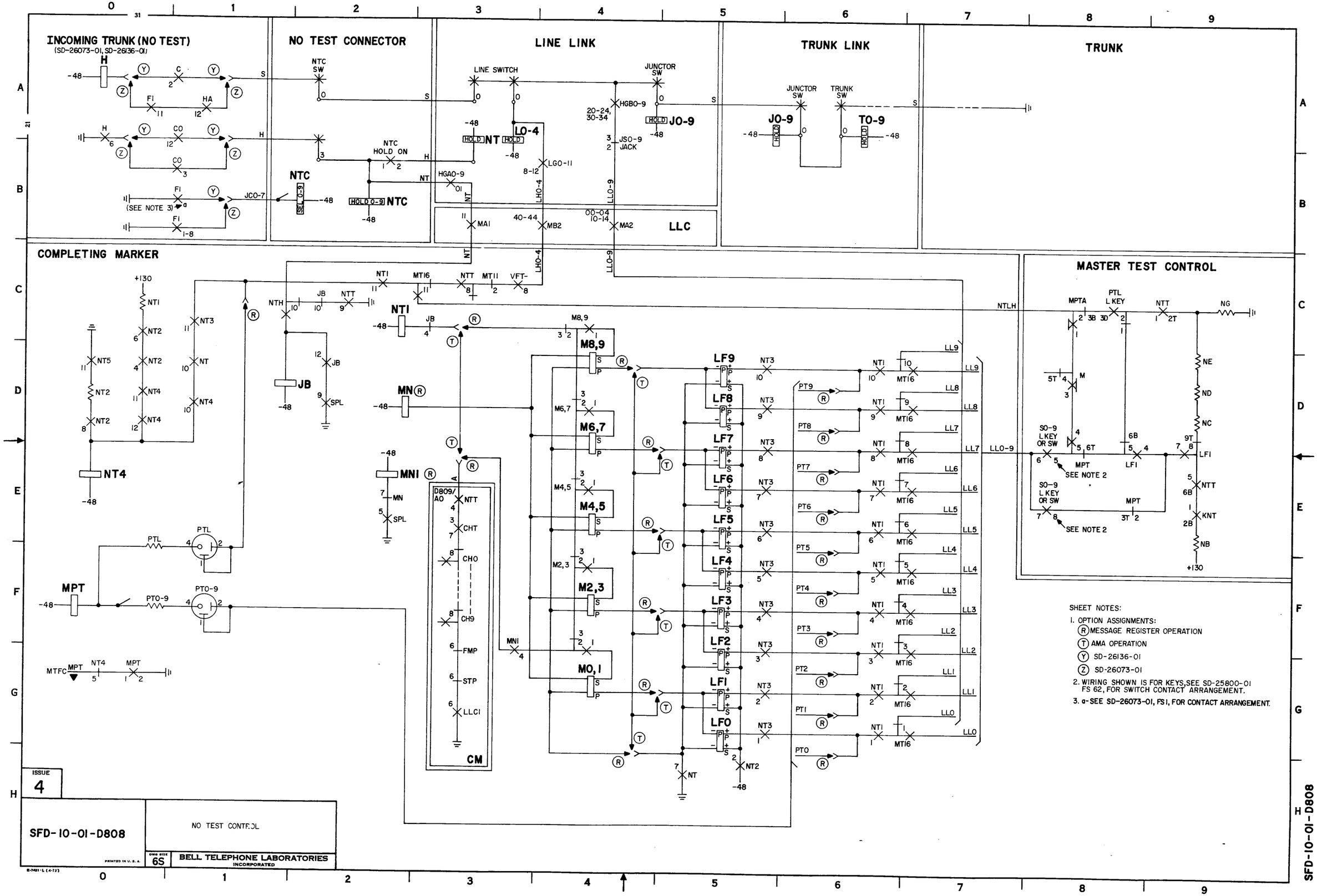
INCOMING TRUNK (NO TEST)
(SD-26073-01, SD-26136-01)
NO TEST CONNECTOR
LINE LINK
TRUNK LINK
TRUNK
COMPLETING MARKER
MASTER TEST CONTROL
LLC
CM
SEE NOTE 2
SHEET NOTES:
1. OPTION ASSIGNMENTS:
(R) MESSAGE REGISTER OPERATION
(T) AMA OPERATION
(Y) SD-26136-01
(Z) SD-26073-01
2. WIRING SHOWN IS FOR KEYS, SEE SD-25800-01 FS 62, FOR SWITCH CONTACT ARRANGEMENT.
3. a-SEE SD-26073-01, FS1, FOR CONTACT ARRANGEMENT.
ISSUE 4
SFD-10-01-D808
NO TEST CONTROL
BELL TELEPHONE LABORATORIES INCORPORATED
PRINTED IN U.S.A.
DWG SIZE 6S
SFD-10-01-D808

COMPLETING MARKER

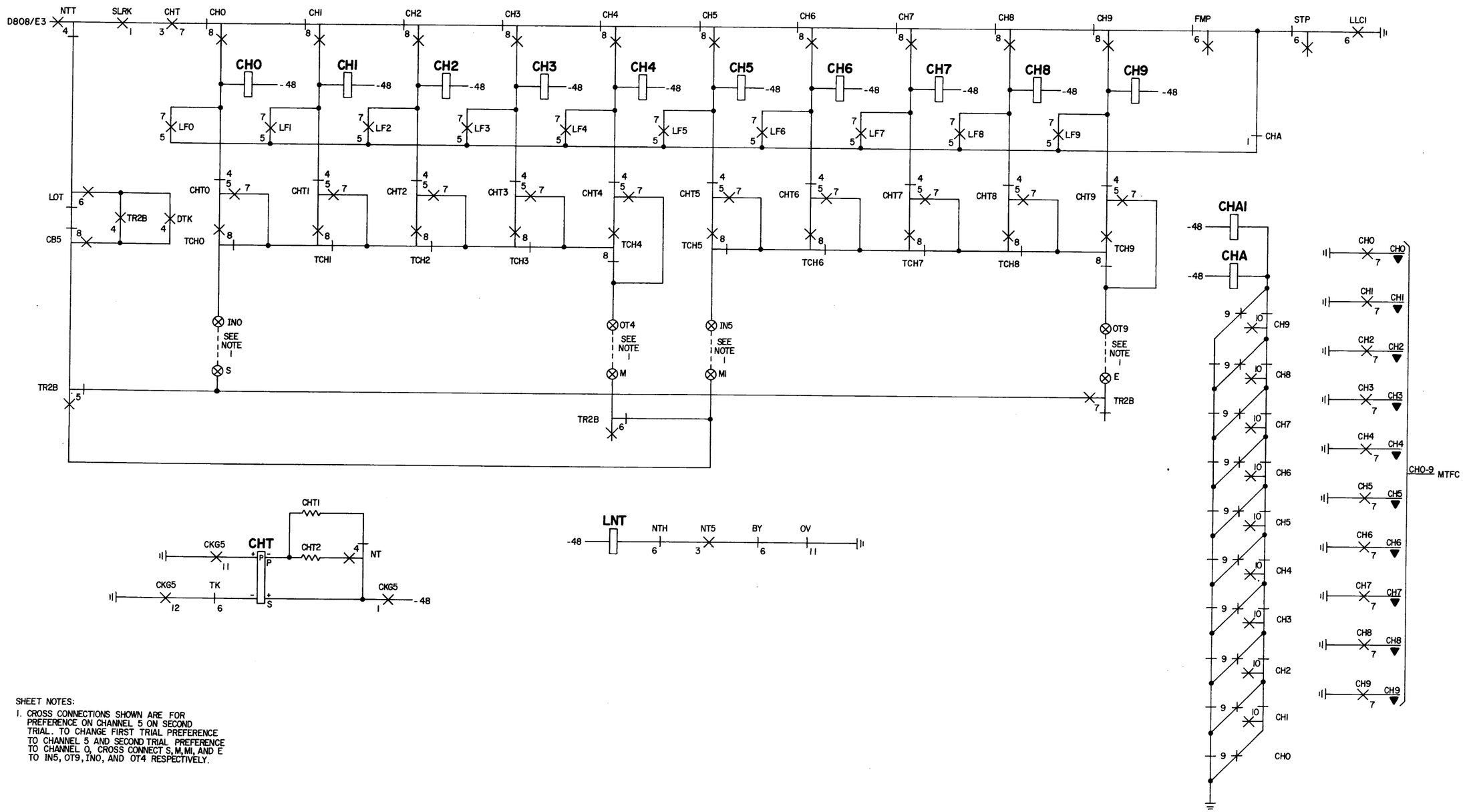

SHEET NOTES:

1. CROSS CONNECTIONS SHOWN ARE FOR PREFERENCE ON CHANNEL 5 ON SECOND TRIAL. TO CHANGE FIRST TRIAL PREFERENCE TO CHANNEL 5 AND SECOND TRIAL PREFERENCE TO CHANNEL 0, CROSS CONNECT S, M, MI, AND E TO IN5, OT9, INO, AND OT4 RESPECTIVELY.

ISSUE 3

CHANNEL SELECTION

SFD-10-01-D809

BELL TELEPHONE LABORATORIES INCORPORATED

DWG SIZE 6S

PRINTED IN U.S.A.

SFD-10-01-D809

ESTABLISHING INCOMING TRUNK CONNECTION

INDEX

CAUTION!

DUE TO THE SIMPLIFIED NATURE OF THIS DOCUMENT, INFORMATION SHOWN MAY NOT BE COMPLETE.

ISSUE 3

PART D9
MAINTENANCE-INCOMING CALL

SFD-10-01-D901

BELL TELEPHONE LABORATORIES INCORPORATED

6S

PRINTED IN U.S.A.

SFD-10-01-D901

DOUBLE SIDED 2/X TROUBLE RECORD CARD (E5488)									KEY(S) OR SWITCH(ES) USED TO SIMULATE TROUBLE RECORD			
FUNCTION			SEE NOTE	DESIGNATION PERFORATED		LOCATION ON CARD			KEY DESIGNATION	SWITCH		KEY DESIGNATION
										DESIGNATION	POSITION	
TYPE OF CALL				TER		S7,33			INC/IR/ ITNP/LT/MLV	TSTA	INC/IR	
										TSTB	ITNP/LT/MLV	
CLASS OF CALL	OFFICE A	PHYSICAL		INC	OA	S3,22	S3,11		IC(OA)	IC/TRNB/TRNC	OA	
		THEORETICAL							IC(OAT)	IC	OAT	
										TRNB	OA	THC
	OFFICE B	PHYSICAL			OB		S3,12		IC(OB)	IC/TRNB/TRNC	OB	
		THEORETICAL							IC(OBT)	IC	OBT	
										TRNB	OB	THC
	OFFICE A AND B				FVD		S3,3		IC(AB)	IC	AB	
										TRNB	FVD	
INCOMING TRUNK CLASS	PHY AND THEO NO.			LCH	ITC(3)	RA3, 42	R3,01,02		ITC-RN(3NA)	ITC	3	
	EXTRA THEO NO.				ITC(4)		R3,00,04		ITC-RN(4NE),E		4	ETHC
	THEORETICAL NUMBERS				ITC(6)		R3,02,04		ITC-RN(6NT)		6	
	PHYSICAL NUMBERS				ITC(9)		R3,02,07		ITC-RN(9NP)		9	
PBX CALL	NON HUNTING			NH		R4,50			NH			NH
	NON-NO-TEST AND HUNTING			NN		R4,53			NN			NN
NO TEST CALL				NT		R4,52			NT			NT
SPECIAL CALL				SPL		R4,51			SPL			SPL
MARKER				MKR CM		S8,31			MT(0-11)			
		TENS		DRT(0,1)		S8,54,A						MTT1
		UNITS		DR-(2/5)		S8,44,50-53				MTU	0-9	
DIGITS A-E	CLASS	AB	2	A-(2/5)	NGCT(0-3) NGCU-(2/5)	S1, 00-04	RA5,B,00-02 RA5,03-12		A(0-9)	A	0-9	
		OA/OB										
		AB		B-(2/5)	HN(0-9)	S1, 10-14	RA5,13-22		B(0-9)	B	0-9	
		OA/OB										
		AB		C-(2/5)	T(0-9)	S1, 20-24	RA5,23-32		C(0-9)	C	0-9	
		OA/OB										
		AB		D-(2/5)	U(0-9)	S1, 30-34	RA5,33-42		D(0-9)	D	0-9	
		OA/OB										
		AB		E-(2/5)		S1, 40-44			E(0-9)	E	0-9	
TRUNK LINK		TENS		FG(0-2)		S5,50-52			FG(0-2)			FG(0-2)
		UNITS		TF-(2/5)		S4,51-54,A			FS(0-9)	FS	0-9	
CHANNEL				CH-(2/5)		RA7,24,30-33			CH(0-9)	CH	0-9	
JUNCTOR STEP				STP1/STP2		RA8,52,53			STP1/STP2			STP1/STP2
JUNCTOR GROUP			1	JG(0-4)		RA7,44,50-53			JSQ(0-5)	JSQ	0-5	

SHEET NOTES:

1. CONSULT JUNCTOR SEQUENCE TABLE ON D908 FOR SETTING OF JSQ KEY OR SWITCH FOR PARTICULAR JG- AND STP-DESIGNATIONS PERFORATED.
2. ON HUNTING LINES THAT FAIL WHILE THE NUMBER GROUP IS ATTACHED, THE LINE THAT WAS SEIZED CORRESPONDS TO THE NGCT,NGCU,HN,T, AND U DESIGNATIONS ON THE TROUBLE RECORD CARD.

ISSUE 3

SFD-10-01-D902

SIMULATION OF INCOMING CALLS WHICH PRODUCE 2/X DOUBLE SIDED TROUBLE RECORD CARDS (E5488)

SIZE 6S

BELL TELEPHONE LABORATORIES INCORPORATED

PRINTED IN U.S.A.

CBL-266(10-75)

SFD-10-01-D902

TERMINATING CALL
2/X DOUBLE SIDED TROUBLE CARD

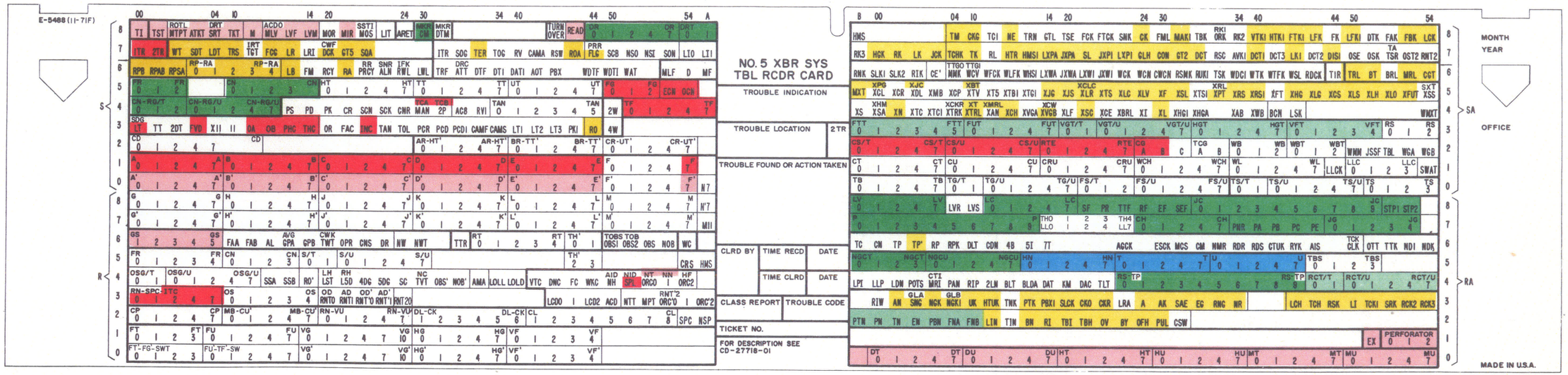

MISCELLANEOUS

INPUT TO MARKER

CIRCUITS OR PATHS USED

OUTPUT FROM MARKER TO NUMBER GROUP

PROGRESS AND TROUBLE INDICATIONS

OUTPUT FROM NUMBER GROUP TO MARKER

ISSUE 4

NO. 5 XBR DOUBLE SIDED 2/X TROUBLE RECORD CARD (E5488) INDICATING DESIGNATIONS WHICH MAY BE PERFORATED ON A TERMINATING CALL

BELL TELEPHONE LABORATORIES INCORPORATED

DWG SIZE 6S

SFD-10-01-D903

PRINTED IN U. S. A.

E-7481 (10-71)

SFD-10-01-D903
7 SHEETS, SHEET 1

DOUBLE SIDED I/X TROUBLE RECORD CARD (E4393)								KEY(S) OR SWITCH(ES) USED TO SIMULATE TROUBLE RECORD			
FUNCTION			SEE NOTE	DESIGNATION PERFORATED		LOCATION ON CARD		KEY DESIGNATION	SWITCH		KEY DESIGNATION
									DESIGNATION	POSITION	
TYPE OF CALL				TER		S7,33		INC/IR/ ITNP/LT/MLV	TSTA	INC/IR	
									TSTB	ITNP/LT/MLV	
CLASS OF CALL	OFFICE A	PHYSICAL		INC	OA	S3,22	S3,11	IC(OA)	IC/TRNB/TRNC	OA	
		THEORETICAL						IC(OAT)	IC	OAT	
									TRNB	OA	THC
	OFFICE B	PHYSICAL			OB		S3,12	IC(OB)	IC/TRNB/TRNC	OB	
		THEORETICAL						IC(OBT)	IC	OBT	
									TRNB	OB	THC
	OFFICE A AND B				FVD		S3,3	IC(AB)	IC	AB	
									TRNB	FVD	
INCOMING TRUNK CLASS	PHYS AND THEO NO.			LCH	ITC(3)	RA1, 32	R3,03	ITC-RN(3NA)	ITC	3	
	EXTRA THEO NO.				ITC(4)		R3,04	ITC-RN(4NE),E		4	ETHC
	THEORETICAL NUMBERS				ITC(6)		R3,11	ITC-RN(6NT)		6	
	PHYSICAL NUMBERS				ITC(9)		R3,14	ITC-RN(9NP)		9	
PBX CALL				NH		R5,53		NH			NH
	NON-NO TEST AND HUNTING			NN		R5,51		NN			NN
NO TEST CALL				NT		R5,50		NT			NT
SPECIAL CALL				SPL		R5,54		SPL			SPL
MARKER			2	MKR		S8,30		MT(0-11)			
		TENS		DRT(0,1)		S7,S8,54					MTTI
		UNITS		DR(0,9)		S8,34,40-44,50-53			MTU	0-9	
DIGITS A-E	CLASS	AB	3	A-(2/5)	NGCT(0-3) NGCU(0-9)	SI, 0-4	RA4,00-03 RA3,00-14	A(0-9)	A	0-9	
		OA/OB									
		AB		B-(2/5)	HN(0-9)	SI, 10-14	RA3,20-34	B(0-9)	B	0-9	
		OA/OB									
		AB		C-(2/5)	T(0-9)	SI, 20-24	RA3,40-54	C(0-9)	C	0-9	
		OA/OB									
		AB		D-(2/5)	U(0-9)	SI, 30-34	RA2,00-14	D(0-9)	D	0-9	
		OA/OB									
		AB		E-(2/5)		SI, 40-44		E(0-9)	E	0-9	
TRUNK LINK		TENS		FG(0-2)		S4,50-52		FG(0-2)			FG(0-2)
		UNITS		TF-(2/5)		S3,50-54		FS(0-9)	FS	0-9	
CHANNEL				CH(0-9)		RA5,10-24		CH(0-9)	CH	0-9	
JUNCTOR STEP				STP1/STP2		RA5,53,54		STP1/STP2			STP1/STP2
JUNCTOR GROUP			1	JG(0-4)		RA6,20-24		JSQ(0-5)	JSQ	0-5	

SHEET NOTES:

1. CONSULT JUNCTOR, SEQUENCE TABLE ON D90B FOR SETTING OF JSQ KEY OR SWITCH FOR PARTICULAR JG- AND STP-DESIGNATIONS PERFORATED.
2. OBSERVE DRT O/I AND DRO-9 AND CONSULT OFFICE RECORDS TO DETERMINE WHETHER RECORD WAS PRODUCED BY A COMPLETING MARKER.
3. ON HUNTING LINES THAT FAIL WHILE THE NUMBER GROUP IS ATTACHED, THE LINE THAT WAS SEIZED CORRESPONDS TO THE NGCT,NGCU, HN,T, AND U DESIGNATIONS ON THE TROUBLE RECORD CARD.

ISSUE 3

SFD-10-01-D904

SIMULATION OF INCOMING CALLS WHICH PRODUCE I/X DOUBLE SIDED TROUBLE RECORD CARDS (E4393)

DWG SIZE 6S

BELL TELEPHONE LABORATORIES INCORPORATED

PRINTED IN U.S.A.

CBL-266(10-75)

SFD-10-01-D904

TERMINATING CALL
I/X DOUBLE SIDED TROUBLE CARD

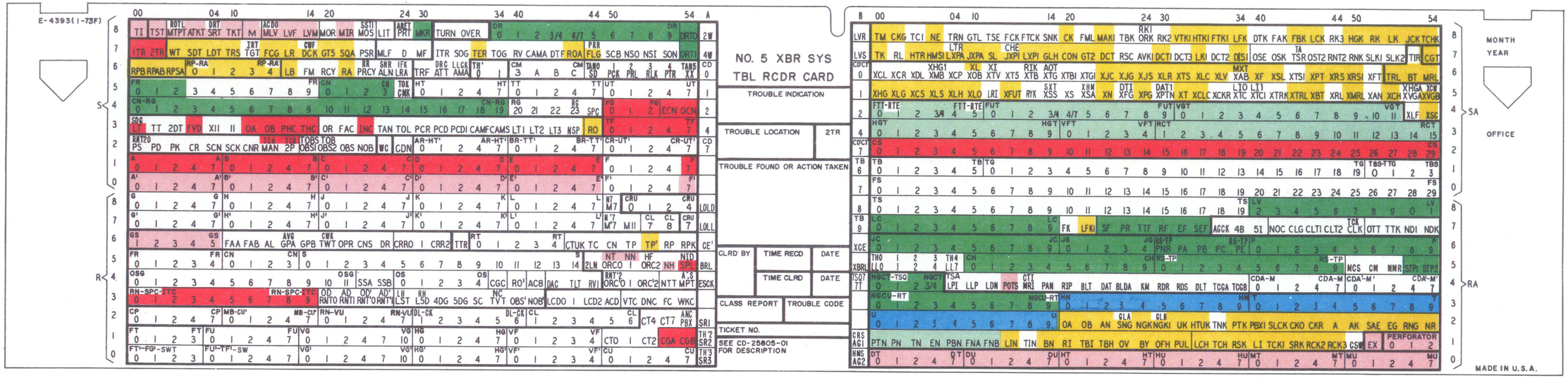

MISCELLANEOUS

INPUT TO MARKER

CIRCUITS OR PATHS USED

OUTPUT FROM MARKER TO NUMBER GROUP

PROGRESS AND TROUBLE INDICATIONS

OUTPUT FROM NUMBER GROUP TO MARKER

SFD-10-01-D905
7 SHEETS, SHEET 1

ISSUE 4

NO. 5 XBR DOUBLE SIDED I/X TROUBLE RECORD CARD (E4393) INDICATING DESIGNATIONS WHICH MAY BE PERFORATED ON A TERMINATING CALL

BELL TELEPHONE LABORATORIES INCORPORATED

DWG SIZE 6S

SFD-10-01-D905

PRINTED IN U.S.A.

E-7481 (10-71)

SINGLE SIDED I/X TROUBLE RECORD CARD (E3638)								KEY(S) OR SWITCH(ES) USED TO SIMULATE TROUBLE RECORD			
FUNCTION			SEE NOTE	DESIGNATION PERFORATED		LOCATION ON CARD		KEY DESIGNATION	SWITCH		KEY DESIGNATION
									DESIGNATION	POSITION	
TYPE OF CALL				TER		S7,9		INC/IR/ ITNP/LT/MLV	TSTA	INC/IR	
									TSTB	ITNP/LT/MLV	
CLASS OF CALL	OFFICE A	PHYSICAL		INC	OA	S4, 12	S4,5	IC(OA)	IC/TRNB/TRNC	OA	
		THEORETICAL						IC(OAT)	IC	OAT	
									TRNB	OA	THC
	OFFICE B	PHYSICAL			OB		S4,6	IC(OB)	IC/TRNB/TBNC	OB	
		THEORETICAL						IC(OBT)	IC	OBT	
									TRNB	OB	THC
	OFFICE A AND B				FVD		S4,2	IC(AB)	IC	AB	
									TRNB	FVD	
INCOMING TRUNK CLASS	PHY AND THEO NO.			LCH	ITC (3)	R2, 10	R7,43	ITC-RN(3NA)	ITC	3	
	EXTRA THEO NO.				ITC (4)		R7,44	ITC-RN(4NE),E		4	ETHC
	THEORETICAL NUMBERS				ITC (6)		R7,46	ITC-RN(6NT)		6	
	PHYSICAL NUMBERS				ITC (9)		R7,49	ITC-RN(9NP)		9	
PBX CALL	NON HUNTING			NH		S3,28		NH			NH
	NON-NO-TEST AND HUNTING			NN		S3,29		NN			NN
NO TEST CALL				NT		S3,25		NT			NT
SPECIAL CALL				SPL		S3,23		SPL			SPL
MARKER			2	MKR		S8,15		MT(0-11)			
		TENS		DRT(0,1)		S7,19,20					MTTI
		UNITS		DR(0-9)		S8,19-28			MTU	0-9	
DIGITS A-E	CLASS	AB	3	A-(2/5)	NGCT(0-3) NGCU(0-9)	SO, 0-4	R4,52-55 R4,0-9	A(0-9)	A	0-9	
		OA/OB									
		AB		B-(2/5)	HN(0-9)	SO, 5-9	R4,10-19	B(0-9)	B	0-9	
		OA/OB									
		AB		C-(2/5)	T(0-9)	SO, 10-14	R3,0-9	C(0-9)	C	0-9	
		OA/OB									
		AB		D-(2/5)	U(0-9)	SO, 15-19	R3,10-19	D(0-9)	D	0-9	
		OA/OB									
		AB		E-(2/5)		SO, 20-24		E(0-9)	E	0-9	
TRUNK LINK		TENS		FG(0,1)		S4,18,19		FG(0-1)			FG(0-1)
		UNITS		TF-(2/5)		S4,20-24		FS(0-9)	FS	0-9	
CHANNEL				CH(0-9)		R7,50-59		CH(0-9)	CH	0-9	
JUNCTOR STEP				STP1/STP2		R5,30,31		STP1/STP2			STP1/STP2
JUNCTOR GROUP			1	JG(0-4)		R6,40-44		JSQ(0-5)	JSQ	0-5	

SHEET NOTES:

1. CONSULT JUNCTOR SEQUENCE TABLE ON D908 FOR SETTING OF JSQ KEY OR SWITCH FOR PARTICULAR JG- AND STP-DESIGNATIONS PERFORATED.
2. OBSERVE DRT 0/1 AND DRO-9 AND CONSULT OFFICE RECORDS TO DETERMINE WHETHER RECORD WAS PRODUCED BY A COMPLETING MARKER.
3. ON HUNTING LINES THAT FAIL WHILE THE NUMBER GROUP IS ATTACHED, THE LINE THAT WAS SEIZED CORRESPONDS TO THE NGCT,NGCU,HN,T, AND U DESIGNATIONS ON THE TROUBLE RECORD CARD.

ISSUE 3

SFD-10-01-D906

SIMULATION OF INCOMING CALLS WHICH PRODUCE I/X SINGLE SIDED TROUBLE RECORD CARDS (E3638)

DWG SIZE 6S

BELL TELEPHONE LABORATORIES INCORPORATED

PRINTED IN U. S. A.

CBL-266(10-75)

SFD-10-01-D906

TERMINATING CALL
I/X SINGLE SIDED TROUBLE CARD

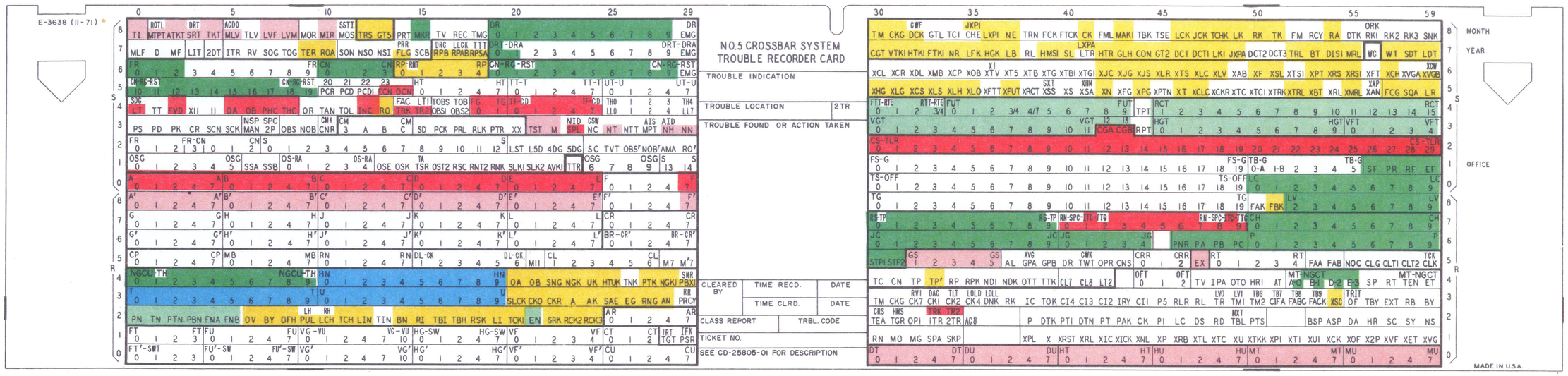

MISCELLANEOUS

INPUT TO MARKER

CIRCUITS OR PATHS USED

OUTPUT FROM MARKER TO NUMBER GROUP

PROGRESS AND TROUBLE INDICATIONS

OUTPUT FROM NUMBER GROUP TO MARKER

ISSUE 4

NO. 5 XBR SINGLE SIDED I/X TROUBLE RECORD CARD (E3638) INDICATING DESIGNATIONS WHICH MAY BE PERFORATED ON A TERMINATING CALL

SFD-10-01-D907

BELL TELEPHONE LABORATORIES INCORPORATED

DWG SIZE 6S

PRINTED IN U.S.A.

SFD-10-01-D907
7 SHEETS, SHEET 1

JUNCTOR SUBGROUP SELECTED (JG- DESIGNATION PERFORATED)

NUMBER OF TRUNK LINK FRAMES			JUNCTOR STEP POSITION (STP1 OR STP2)	JUNCTOR SEQUENCE (JSQ-)					
SINGLE	PAIRED	TRIPLED		0	1	2	3	4	5
2	4	6	1 2	JG0 JG3	JG1 JG4	JG2 JG3	JG0 JG4	JG1 JG3	JG2 JG4
2-3	4-6	6-9	1 2	JG0 JG1	JG1 JG2	JG2 JG0	JG0 JG1	JG1 JG2	JG2 JG0
3	6	9	1 2	JG0 JG3	JG1 JG3	JG2 JG3	JG0 JG3	JG1 JG3	JG2 JG3
4	8	12	1 2	JG0 JG2	JG1 JG2	JG0 JG2	JG1 JG2	JG0 JG2	JG1 JG2
5	10	15	1 2	JG0 JG1	JG1 JG0	JG0 JG1	JG1 JG0	JG0 JG1	JG1 JG0
6	12	18	1 2	JG0 JG1	JG0 ** JG1/2	* JG0/1 ** JG0/1	JG0 ** JG1/2	JG0 JG1	** JG0/1 ** JG0/2
7	14	21	1 2	JG0 JG1	JG0 ** JG1/2	JG0 JG1	JG0 ** JG1/2	JG0 JG1	** JG0/1 ** JG0/2
8	16	24	1 2	JG0 JG1	JG0 JG1	JG0 JG1	JG0 JG1	JG0 JG1	JG0 JG1
9	18	27	1 2	JG0 JG1	JG0 JG1	JG0 JG1	JG0 JG1	JG0 JG1	JG0 JG1
10	20	30	1	JG0	JG0	JG0	JG0	JG0	JG0

* JG0 DESIGNATION PERFORATED IF THREE JUNCTOR SUBGROUPS EXIST BETWEEN LINE LINK AND TRUNK LINK FRAMES.
JG1 DESIGNATION PERFORATED IF TWO JUNCTOR SUBGROUPS EXIST BETWEEN LINE LINK AND TRUNK LINK FRAMES.

** LOWER-NUMBERED JG- DESIGNATION PERFORATED IF TWO JUNCTOR SUBGROUPS EXIST BETWEEN LINE LINK AND TRUNK LINK FRAMES.
HIGHER-NUMBERED JG- DESIGNATION PERFORATED IF THREE JUNCTOR SUBGROUPS EXIST BETWEEN LINE LINK AND TRUNK LINK FRAMES.

AUTOMATIC TROUBLE ANALYSIS EXCEPTION REPORT						KEY(S) OR SWITCH(ES) USED TO SIMULATE TROUBLE RECORD			
FUNCTION			SEE NOTE	TTY OUTPUT		KEY DESIGNATION	SWITCH		KEY DESIGNATION
							DESIGNATION	POSITION	
TYPE OF CALL				TER		INC/IR/ ITNP/LT/ MLV	TSTA	INC/IR	
							TSTB	LTNP/LT/MLV	
CLASS OF CALL	OFFICE A	PHYSICAL		INC	OA	IC(OA)	IC/TRNB/TRNC	OA	
		THEORETICAL				IC(OAT)	IC	OAT	
							TRNB	OA	THC
	OFFICE B	PHYSICAL			OB	IC(OB)	IC/TRNB/IRNC	OB	
		THEORETICAL				IC(OBT)	IC	OBT	
							TRNB	OB	THC
	OFFICE A AND B				FVD	IC(AB)	IC	AB	
							TRNB	FVD	
INCOMING TRUNK CLASS	PHY AND THEO NO			LCH	ITC.3	ITC-RN(3NA)	ITC	3	
	EXTRA THEO NO				ITC.4	ITC-RN(4NE),E		4	ETHC
	THEORETICAL NUMBERS				ITC.6	ITC-RN(6NT)		6	
	PHYSICAL NUMBERS				ITC.9	ITC-RN(9NP)		9	
PBX CALL	NON HUNTING			NH		NH			NH
	NON-NO-TEST AND HUNTING			NN		NN			NN
NO TEST CALL				NT		NT			NT
SPECIAL CALL				SPL		SPL			SPL
MARKER				MKR.CM		MT(0-11)			
		TENS	2	MKR.XX					MTTI
		UNITS					MTU	0-9	
DIGITS A-E			3	DIG.XXXXX		A(0-9)	A	0-9	
						B(0-9)	B	0-9	
						C(0-9)	C	0-9	
						D(0-9)	D	0-9	
						E(0-9)	E	0-9	
TRUNK LINK		TENS		FG.X		FG(0-2)			FG(0-2)
		UNITS		TF.X		FS(0-9)	FS	0-9	
CHANNEL				CH.X		CH(0-9)	CH	0-9	
JUNCTOR STEP				STPI/STP2		STPI/STP2			STPI/STP2
JUNCTOR GROUP			1	JG.X		JSQ(0-5)	JSQ	0-5	

SHEET NOTES:

1. CONSULT JUNCTOR, SEQUENCE TABLE ON D908 FOR SETTING OF JSQ KEY OR SWITCH FOR PARTICULAR JG- AND STP-DESIGNATIONS PERFORATED.
2. OBSERVE MKR.XX AND CONSULT OFFICE RECORDS TO DETERMINE WHETHER RECORD WAS PRODUCED BY A COMPLETING MARKER.
3. ON HUNTING LINES THAT FAIL WHILE THE NUMBER GROUP IS ATTACHED, THE LINE THAT WAS SEIZED CORRESPONDS TO THE NGCT.X,NGCU.X,HN.X,T.X, AND U.X PRINTED ON THE EXCEPTION REPORT.

ISSUE 3

SIMULATION OF INCOMING CALLS WHICH PRODUCE AN AUTOMATIC TROUBLE ANALYSIS EXCEPTION REPORT

SFD-10-01-D909

BELL TELEPHONE LABORATORIES INCORPORATED

DWG SIZE 6S

PRINTED IN U.S.A.

SFD-10-01-D909

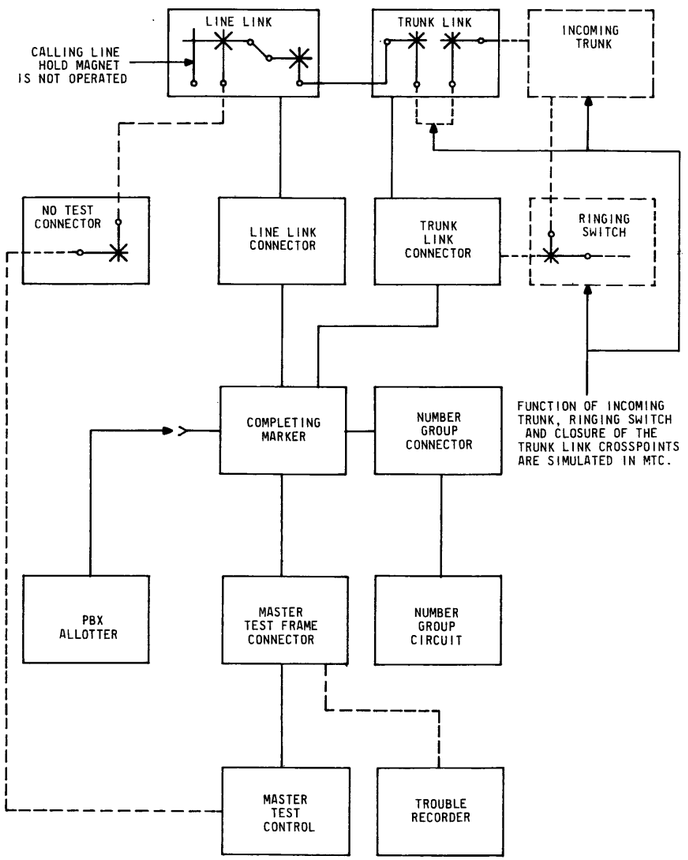

BSP 218-122-512, ISS 1

SD-25800-01 MASTER TEST CONTROL CIRCUIT (MTC)

SHEET NOTES:

1. KEY(S) OR SWITCH(ES) THAT MUST BE OPERATED TO PERFORM THIS CLASS OF TEST.
2. KEY(S) OR SWITCH(ES) USED TO SIMULATE TROUBLE RECORD (SEE SFD-D902/D904/D906).
3. KEY(S) OR SWITCH(ES) WHICH MAY BE OPERATED TO CAUSE ADDITIONAL ACTIONS OR TEST VARIATIONS FOR THIS PARTICULAR TEST.

SD-25800-01

SEE NOTE	FIG. OR OPT	KEY OR SWITCH	FUNCTION
1	67	INC KEY	INCOMING TEST CAUSES THE TEST CIRCUIT TO CONNECT TO THE MARKER UNDER TEST THROUGH MTFC AND TO SIMULATE SEIZURE OF THE MARKER BY AN INCOMING REGISTER.
	74	TSTA SW (INC)	
1,2	11, ZVP	IC KEY (OA/OB/AB)	INCOMING CLASS OPERATED CONTROLS THE INCOMING CLASS TRANSMITTED TO THE MARKER.
	11, CY	IC SW (OA/OB/AB)	
	NQ	TRNB SW (OA/OB/FVD)	
		ICL SW (INC)	
1,2	WL,WK, ZYZ	ITC(0-9) KEY	INCOMING TRUNK CLASS OPERATED TO CONTROL THE INCOMING CLASS TRANSMITTED TO THE MARKER. SEE OFFICE RECORDS FOR CORRECT SETTING.
		TCB KEY (OPR/N-OPR)	
	NQ,JF	ITC SW (0-9)	TCB KEY NORMAL-TRUNK CLASS A
		CL SW (TCA/B)	
1,2	19,21	MT (0-11) KEY	MARKER TEST DIRECTS THE MTFC TO CONNECT THIS TEST CIRCUIT (MTC) TO THE MARKER CORRESPONDING TO THE NUMBER OPERATED.
	52	MT SW (0-11)	
	81	MTU SW (0-9)	
		MTTI KEY	
1,2	4, KX	A-E (0-9) KEY	DIGITS DIRECTORY NUMBER OF LINE BEING TESTED.
	4, ZVL	A-E SW (0-9)	
1	9	FS KEY	FRAME SELECTION PERMITS SELECTION OF A PARTICULAR TRUNK LINK FRAME UNDER CONTROL OF THE FG(0-2) KEYS AND FS(0-9) KEYS OR SWITCH.
1,2	U	FG (0,1) KEY	TRUNK LINK FRAME GROUP USED IN CONJUNCTION WITH THE FS(0-9) KEYS OR SWITCH WHEN THE FS KEY IS OPERATED. INDICATES TENS DIGIT ON TRUNK LINK FRAME NUMBER.
	79	FG (0-2) KEY	
	80	FG (1,2) KEY	FOR FRAME GROUP 0, THE FG KEY SHOULD BE IN THE NORMAL POSITION.
1,2	U, 79	FS (0-9) KEY	TRUNK LINK FRAME UNITS WITH FS KEY OPERATED, MAKES ALL TRUNK LINK FRAMES EXCEPT THAT CORRESPONDING TO THE OPERATED FS(0-9) ON FG(0-2) KEYS LOOK BUSY.
	80	FS SW (0-9)	
1	1	ST/RL KEY	START AND RELEASE OPERATED TO ST INITIATES A TEST CALL. OPERATED TO RL CAUSES TEST CALL AND ALL ASSOCIATED CIRCUITS TO RELEASE.
2	10	STP1/ STP2 KEY	JUNCTOR SEQUENCE STEP WITH STP1 KEY OPERATED, ALLOWS MARKER TO MAKE CHANNEL SELECTION IN JUNCTOR GROUP STEP 1, BUT IF NO CHANNEL IS AVAILABLE AND MARKER ADVANCES TO STEP 2, MAKES ALL CHANNELS LOOK BUSY. WITH STP2 KEY OPERATED, MAKES ALL CHANNELS LOOK BUSY IN JUNCTOR GROUP STEP 1, CAUSING MARKER TO ADVANCE TO STEP 2 WHERE IT IS ALLOWED TO MAKE CHANNEL SELECTION.

SD-25800-01

SEE NOTE	FIG. OR OPT	KEY OR SWITCH	FUNCTION
2	10, FS, FT	CH (0-9) KEY	CHANNEL BLANKS OUT ALL BUT THE DESIRED CHANNEL.
	10, EA	CH (0-9) SW	
2	10, KX	JSQ (0-5) KEY	JUNCTOR SEQUENCE RESETS THE JUNCTOR SEQUENCE WALKING RELAYS OF THE MARKER TO A DESIRED WALKING POSITION. REFER TO D908 FOR SETTINGS.
	10, JF	JSQ (0-5) SW	
3	1	REC KEY	RECORD CAUSES MARKER TO REQUEST A TROUBLE RECORD OF THE TEST CALL BEFORE RELEASING.
3	16	EBH/ PBXH KEY	END OF BLOCK HUNT OPERATED TO EBH POSITION TO FORCE END OF BLOCK HUNTING ON PBX LINES. PRIVATE BRANCH EXCHANGE HUNTING OPERATED TO CONTROL PBX HUNTING IN CONJUNCTION WITH S(0-9) KEY(S) OR SWITCH(ES) ON PBX HUNTING LINES.
3	16, KX	S (0-9) KEY	SLEEVE WITHIN TENS BLOCK WITH THE PBXH KEY OPERATED ON TEST TO PBX NUMBER, ALL NUMBERS WITHIN A TENS BLOCK ARE MADE TO LOOK BUSY TO THE MARKER EXCEPT THAT LINE CORRESPONDING TO S(0-9) KEY OR SWITCH OPERATED.
	16, JF	S SW (0-9)	WITH THE EBH KEY OPERATED, ALL NUMBERS WITHIN TENS BLOCK ARE MADE TO LOOK BUSY AND CAUSE MARKER TO BLOCK HUNT IF PBX GROUP INCLUDES MORE THAN ONE TENS BLOCK.
3	13	LR KEY	LINK RELEASE OPERATED TO SIMULATE A SIGNAL FROM AN INCOMING REGISTER THAT THE REGISTER LINK PREFERENCE AND CONTROL RELAYS FAILED TO RELEASE.
3	13 VW, TL	RO KEY	REORDER OPERATED TO SIMULATE A REQUEST FOR REORDER BY INCOMING REGISTER.
3	13	DCK KEY	DOUBLE-CONNECTION TEST OPERATED TO SIMULATE A SIGNAL FROM AN INCOMING REGISTER THAT THERE IS A DOUBLE-CONNECTION ON THE INCOMING REGISTER LINK.
3	12	OCN KEY	ODD CONNECTOR NORMAL SIGNALS THE MARKER THAT AN EVEN INCOMING REGISTER CONNECTOR SEIZURE IS BEING SIMULATED. OPERATED SIGNALS THE MARKER THAT AN ODD INCOMING REGISTER CONNECTOR SEIZURE IS BEING SIMULATED.
3	15	PU KEY	PLUGGING UP OPERATED TO TEST PU RELAY AND RECYCLE MARKER TO TROUBLE INTERCEPT.
3	15, ZL	TCT KEY	TEST CONTINUITY TUBE CONTROLS THE TEST APPLIED TO THE MARKER VACUUM TUBES IN THE CONTINUITY TEST FEATURE SO THAT THIS MAY BE LIMITED AS TO RINGING VOLTAGE.
3	15, ZM	LGT KEY	LOOP GROUND TEST KEY NORMAL, CAUSES GROUND TEST TO BE APPLIED TO THE TIP. LGT KEY OPERATED, CAUSES GROUND TESTS TO BE APPLIED BY LOOPING THE TIP AND RING.
3	15	CON/ RV KEY	CONTINUITY/REVERSE CON KEY OPERATED, APPLIES A LOOP CONTINUITY TEST TO THE MARKER CON TUBE. WITH THE RV KEY OPERATED, TRANSFERS THE CONTINUITY TEST FEATURE FROM THE RING TO THE TIP.
3	15	GT/ FCG KEY	GROUND TEST/FALSE CROSS & GROUND OPERATED TO GT APPLIES A HOLD TEST TO THE MARKER GT RELAY. NORMAL APPLIES A RELEASE TEST TO THE MARKER GT RELAY. FCG APPLIES AN OPERATE TEST TO THE MARKER FCG RELAY.
3	15	LB/ XLH KEY	LINE BUSY/CROSSED LINE HOLD MAGNET WITH LB KEY OPERATED, MAKES ANY LINE APPEAR BUSY TO MARKER BY CAUSING THE LHMT LEAD TO BE GROUNDED UPON RECEIVING A GROUND FROM THE MARKER ON THE HGK LEAD. XLH KEY OPERATED, SHUNTS THE LHM RELAY WITH 3000-OHMS TO SIMULATE A CONDITION SIMILAR TO CROSSED-LINE HOLD MAGNETS.

ISSUE 4

SFD-10-01-D910

INCOMING CLASS OF MARKER TEST

PRINTED IN U.S.A.

FORM SIZE 6S

BELL TELEPHONE LABORATORIES INCORPORATED

CBL-266(10-75)

SFD-10-01-D910

SD-25800-01

* SEE NOTE	FIG. OR OPT	KEY OR SWITCH	FUNCTION
3	15	LBL KEY	LINE BUSY AT LINE LINK LBL KEY OPERATED, MAKES ANY LINE APPEAR BUSY TO THE MARKER BY CAUSING THE LHMT LEAD TO BE GROUNDED TO THE MARKER UPON RECEIVING A GROUND ON THE HGK LEAD.
3	1, ZWB, ZWC	TR2/ TRS KEY	SECOND TRIAL/TRANSFER START WITH KEY NORMAL, SIGNALS MARKER TO FUNCTION ON A FIRST TRIAL BASIS. WHEN OPERATED, TR2 KEY SIGNALS MARKER TO FUNCTION ON SECOND TRIAL BASIS. TRS KEY OPERATED, SIGNALS THE MARKER THAT THERE WAS A CONNECTOR START TRANSFER.
3	14	NTC KEY	NO TEST CONNECTOR CAUSES THE MARKER TO USE A NO TEST VERTICAL AS THE ORIGINATING LINE FOR THE TEST.
3	32	NGT KEY	NUMBER GROUP TEST ON MARKER TESTS FOR USE IN CONTROLLING SELECTION OF PARTICULAR NUMBER GROUPS BY THE PBX ALLOTTER.
3	32	NG (A-H) KEY	NUMBER GROUP MAKE BUSY ANY OF THE NG(A-H) KEYS PULLED OUT MAKES THE ASSOCIATED NUMBER GROUP APPEAR BUSY TO THE ALLOTTER ON A MARKER TEST CALL TO AN ALLOTTED NUMBER. CALLS CAN BE DIRECTED TO A PARTICULAR NUMBER GROUP BY PULLING OUT ALL KEYS BUT THE ONE ASSOCIATED WITH THE PARTICULAR NUMBER GROUP OR BY SETTING THE NGT SWITCH TO THE DESIRED NUMBER GROUP.
3	33	LP (0-11) KEY	PROGRESS AND IDENTIFICATION LAMP CONTROL LP(0-11) KEY OR LP SWITCH AND LPT KEY CONTROLS THE PROGRESS AND IDENTIFICATION LAMPS FOR MARKERS 0-11, RESPECTIVELY. WITH ALL KEYS IN, ALL MARKERS LIGHT PROGRESS AND IDENTIFICATION LAMPS. WITH ANY ONE KEY PULLED OUT, ONLY THE CORRESPONDING MARKER CAN LIGHT PROGRESS AND IDENTIFICATION LAMPS.
	143	LP SW (0-9)	
		LPT KEY	
3	11	SPL KEY	SPECIAL SIGNALS THE MARKER TO HANDLE A SPECIAL CALL.
3	13	NH/NT KEY	NO HUNT/NO TEST SIGNALS MARKER THAT IT IS HANDLING EITHER A "NO-HUNT" OR "NO-TEST" CALL.
3	PE, PF	NN KEY	NEITHER NO-TEST NOR NO-HUNT SIGNALS THE MARKER THAT IT IS HANDLING A "SPECIAL HUNT" CALL WHICH IS NEITHER "NO-TEST" NOR "NO-HUNT".
3	WU, WX, ZXE	PTL KEY	POTENTIAL TEST LINE WITH NT KEY OPERATED AND PTL NON OPERATED, AN OPERATE TEST IS MADE OF THE MARKER PT(0-9) TUBE, THE LF(0-9) RELAY, AND THE ASSOCIATED M(0-4) RELAY CORRESPONDING TO THE OPERATED S(0-9) KEY OR SWITCH. WITH THE PTL KEY OPERATED AN OPERATE TEST OF THE PTL TUBE IS SUBSTITUTED FOR THE OPERATE TEST OF THE PT(0-9) TUBE.

* SEE SHEET D910 FOR SHEET NOTES

ISSUE 4

INCOMING CLASS OF MARKER TEST

SFD-10-01-D911

BELL TELEPHONE LABORATORIES INCORPORATED

DRAWING SIZE 6S

PRINTED IN U.S.A.

SFD-10-01-D911

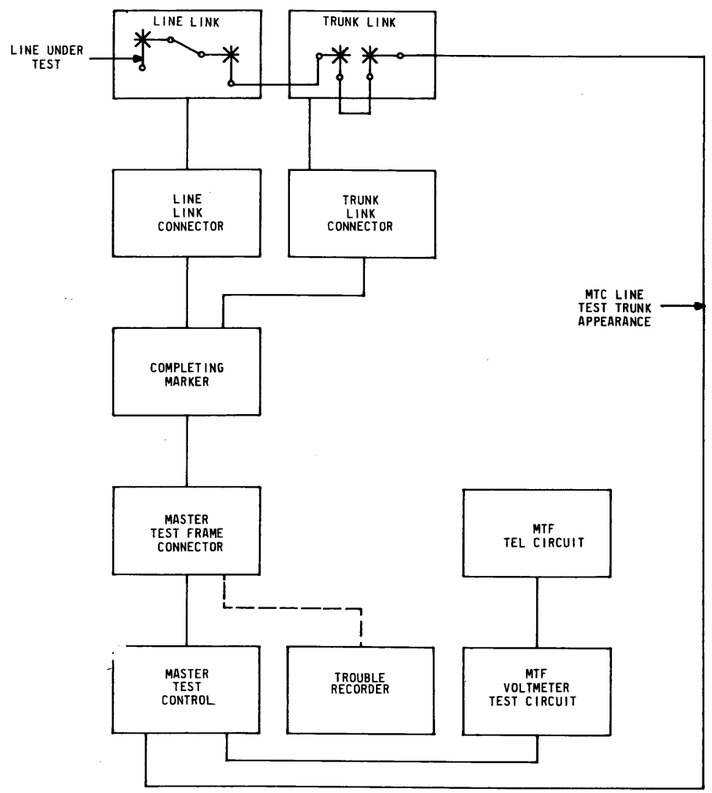

BSP 218-245-501,ISS 4

SD-25800-01 MASTER TEST CONTROL CIRCUIT (MTC)
SD-25792-01 MASTER TEST FRAME VOLTMETER TEST CIRCUIT (VM TST)

SHEET NOTES:

1. KEY(S) OR SWITCH(ES) THAT MUST BE OPERATED TO PERFORM THIS CLASS OF TEST.
2. KEY(S) OR SWITCH(ES) USED TO SIMULATE TROUBLE RECORD (SEE SFD-D902/D904/D906).
3. KEY(S) OR SWITCH(ES) WHICH MAY BE OPERATED TO CAUSE ADDITIONAL ACTIONS OR TEST VARIATIONS FOR THIS PARTICULAR TEST.

SD-25800-01

SEE NOTE	FIG. OR OPT	KEY OR SWITCH	FUNCTION
1	68	LT KEY	LINE TEST CAUSES THE MTC TO CONNECT TO A MARKER THROUGH THE MTFC IN ORDER TO DIRECT IT TO SET UP A TEST CONNECTION FROM THE MASTER TEST FRAME VOLTMETER TEST (VM TST) CIRCUIT TO THE LINE TO BE TESTED.
	74	TSTB SW (LT)	
1	19, 21	MT (0,1) KEY	MARKER TEST DIRECTS THE MTFC TO CONNECT THIS TEST CIRCUIT (MTC) TO THE SPECIAL MARKER SELECTED.
	52	MT SW (0,1)	
	81	MTU SW (0-9)	
1,2	4,KX	A-D (0-9) KEY	DIGITS DIRECTORY NUMBER OF LINE BEING TESTED.
	4,ZVL	A-D SW (0-9)	
1,2	11, ZVP	IC KEY (OA,OAT/ OB/OBT)	INCOMING CLASS OPERATED CONTROLS THE INCOMING CLASS TRANSMITTED TO THE MARKER.
	CY, 11	IC SW (OA,OAT/ OB/OBT)	
	11, NQ, ZE	TRNB SW (OA/OB)	
		THC KEY	THC KEY SIGNALS THE MARKER TO COMPLETE TO A THEORETICAL OFFICE WHEN THE TRNB SW IS IN THE OA OR OB POSITION.
		ICL SW (INC)	
1,2	11,PA, PB,PC	E KEY	EXTRA THEORETICAL USED IN CONJUNCTION WITH THE INCOMING CLASS KEYS OR SWITCHES FOR EXTRA THEORETICAL NUMBERS IN THE A OR B OFFICE.
	11, NQ	ETHC KEY	
		NONE	EXTRA THEORETICAL NUMBERS NOT USED.
1	1	ST/RL KEY	START AND RELEASE OPERATED TO ST INITIATES A TEST CALL. OPERATED TO RL CAUSES TEST CALL AND ALL ASSOCIATED CIRCUITS TO RELEASE.
3	1	REC KEY	RECORD CAUSES THE MARKER TO REQUEST A TROUBLE RECORD OF THE TEST CALL BEFORE IT RELEASES.
3		VMTI KEY	VOLTMETER TEST ASSOCIATES THE VM TST CIRCUIT WITH THE MASTER TEST CONTROL CIRCUIT AND CONNECTS 100V TEST BATTERY THROUGH 100,000 OHMS RESISTANCE OF THE METER TO THE RING SIDE OF LINE. KEY LOC ON VM TST PANEL.
3		VM REV KEY	VOLTMETER REVERSE REVERSES THE VOLTMETER WITH RESPECT TO THE LINE UNDER TEST WHEN TESTING THE RING SIDE OF THE LINE FOR A POSITIVE BATTERY POTENTIAL WHICH IS GROUNDED. KEY LOC ON VM TST PANEL.
3		TI REV KEY	TIP VOLTMETER REVERSE REVERSES THE VOLTMETER WITH RESPECT TO THE LINE UNDER TEST WHEN TESTING THE TIP SIDE OF THE LINE FOR A POSITIVE BATTERY POTENTIAL WHICH IS GROUNDED. KEY LOC ON VM TST PANEL.

SD-25800-01

SEE NOTE	FIG. OR OPT	KEY OR SWITCH	FUNCTION
3		G KEY	GROUND OPERATED APPLIES METALLIC TESTS TO THE LINE. KEY LOC ON VM TST PANEL.
3		RG KEY	RINGING GROUND OPERATED REMOVES GROUND BY OPENING THE RINGING GROUND LEADS SO THAT RINGING MAY BE APPLIED TO THE RING (TI REV KEY NORMAL) OR TIP (TI REV KEY) OPERATED. KEY LOC ON VM TST PANEL.
3		FEMF KEY	FOREIGN POTENTIAL USED TO DETECT FOREIGN POTENTIAL ON LINE. KEY LOC ON VM TST PANEL.
3		± KEY	RINGING CONNECTS RINGING CURRENT TO THE TIP AND RING LEADS. KEY LOC ON VM TST PANEL.
3		CC/CR KEY	COIN COLLECT/RETURN OPERATED CONNECTS COIN COLLECT OR COIN RETURN POTENTIAL TO THE LINE. KEY LOC ON VM TST PANEL.
3		T KEY	TALK PREPARES THE TELEPHONE CIRCUIT FOR TALKING. KEY LOC ON VM TST PANEL.
3		AM KEY	AM KEY CONNECTS 45 TO 50V TEST BATTERY THROUGH 200 OHMS RESISTANCE OF THE METER TO THE RING SIDE OF THE LINE. KEY LOC ON VM TST PANEL.
3		20,000/ 1,000 KEY	20,000/1000 CONNECTS 20V TEST BATTERY THROUGH 20,000 OR 1,000 OHMS RESISTANCE OF THE METER TO THE RING SIDE OF THE LINE. KEY LOC ON VM TST PANEL.

ISSUE 5

SFD-10-01-D912

SUBSCRIBER LINE CLASS OF TEST

PRINTED IN U.S.A. SIZE 6S BELL TELEPHONE LABORATORIES INCORPORATED

CBL-266(10-75)

SFD-10-01-D912

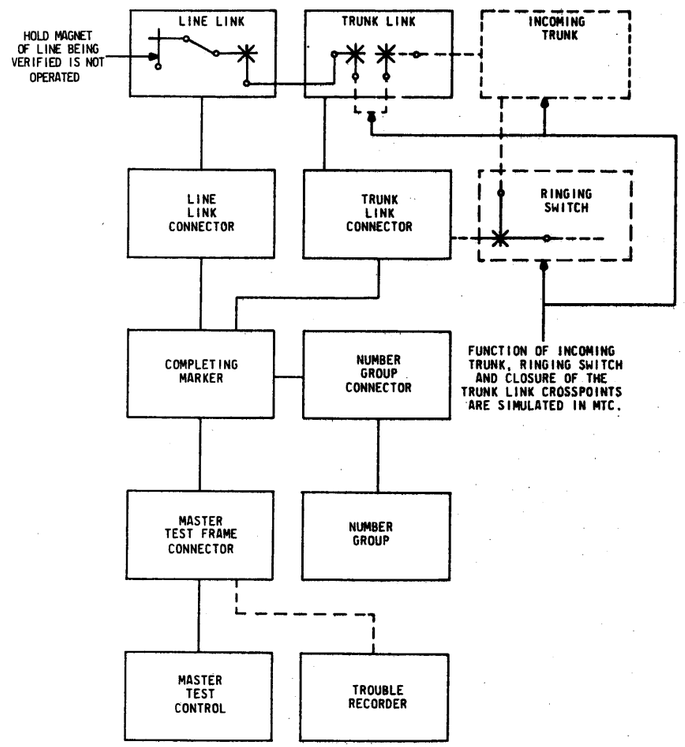

BSP 218-102-501

SD-25800-01 MASTER TEST CONTROL CIRCUIT (MTC)

SHEET NOTES:

1. KEY(S) OR SWITCH(ES) THAT MUST BE OPERATED TO PERFORM THIS CLASS OF TEST.
2. KEY(S) OR SWITCH(ES) USED TO SIMULATE TROUBLE RECORD (SEE SFD-D902/D904/D906).
3. KEY(S) OR SWITCH(ES) WHICH MAY BE OPERATED TO CAUSE ADDITIONAL ACTIONS OR TEST VARIATIONS FOR THIS PARTICULAR TEST.

SD-25800-01

SEE NOTE	FIG. OR OPT	KEY OR SWITCH	FUNCTION
1	68	MLV KEY	MARKER LINE VERIFICATION CAUSES THE TEST CIRCUIT TO CONNECT TO A MARKER WITH THE NUMBER OF THE LINE TO BE VERIFIED.
	74	TSTB SW (MLV)	
1,2	11, ZVP	IC KEY (OA/OAT/ OB/OBT)	INCOMING CLASS OPERATED CONTROLS THE INCOMING CLASS TRANSMITTED TO THE MARKER.
	11,CY	IC SW (OA/OAT/ OB/OBT)	
	11,NQ, ZE	ICL SW (INC)	
		TRNB SW (OA/OB)	
		THC KEY	THC KEY SIGNALS THE MARKER TO COMPLETE TO A THEORETICAL OFFICE WHEN THE TRNB SW IS IN THE OA OR OB POSITION.
1,2	11,PA, PB,PC	E KEY	EXTRA THEORETICAL USED IN CONJUNCTION WITH THE INCOMING CLASS KEYS OR SWITCHES FOR EXTRA THEORETICAL NUMBERS IN THE A OR B OFFICE.
	11,NQ	ETHC KEY	
		NONE	EXTRA THEORETICAL NUMBERS NOT USED.
1	19,21	MT (0-1) KEY	MARKER TEST DIRECTS THE MTFC TO CONNECT THIS TEST CIRCUIT (MTC) TO THE SPECIAL MARKER SELECTED.
	52	MT SW (0,1)	
	81	MTU SW (0-1)	
1,2	4,KX	A-D (0-9) KEY	DIGITS OPERATE KEYS OR SWITCHES AS NECESSARY FOR LINE TO BE VERIFIED.
	4,ZVL	A-D SW (0-9)	
1,2	FIG.S	FT (0-3) KEY	FRAME TENS OPERATED TO TRANSMIT THE LINE LINK FRAME TENS DIGIT TO THE MARKER.
	FIG. T	FT (0-5) KEY	
	78	FT SW (0-5)	
1,2	6,KX,	FU (0-9) KEY	FRAME UNITS OPERATED TO TRANSMIT THE LINE LINK FRAME UNITS DIGIT TO THE MARKER.
	6,ZWP, ZWQ	FU SW (0-9)	
1,2	6,KX	VG (0-9) KEY	VERTICAL GROUP OPERATED TO TRANSMIT THE VERTICAL GROUP TO THE MARKER.
	6,ZF	VG (10-13) KEY	
	6,JF	VGU SW (0-9)	
		VGTI KEY	

SD-25800-01

SEE NOTE	FIG. OR OPT	KEY OR SWITCH	FUNCTION
1,2	6,KX	HG (0-9) KEY	HORIZONTAL GROUP OPERATED TO TRANSMIT THE HORIZONTAL GROUP TO THE MARKER.
	6,JF	HG SW (0-9)	
1,2	6,RD	VF (0-4) KEY	VERTICAL FILE OPERATED TO TRANSMIT THE VERTICAL FILE TO THE MARKER.
	6,JF	VF SW (0-4)	
1,2	7,XA, XB,ZG	CST (0-2) KEY	CLASS OF SERVICE TENS CONTROLS THE CLASS-OF-SERVICE TENS DIGIT TRANSMITTED TO THE MARKER.
	7,XB	CST (0-9) KEY	
	7,JF	CST SW (0-9)	
1,2	7,JH, RY	CSU (0-9) KEY	CLASS OF SERVICE UNITS CONTROLS THE CLASS-OF-SERVICE UNITS DIGIT TRANSMITTED TO THE MARKER.
	7,JF	CSU SW (0-9)	
1,2	37, GC,GD	CGB KEY (OPR/N-OPR)	CLASS GROUP B USED WHEN OFFICE HAS A MAXIMUM OF 60 CLASSES OF SERVICE. SELECTS CLASS GROUP A WITH KEY IN NORMAL POSITION.
		NONE	
1,2	7,JI	CRU (0-9) KEY	CUSTOMER RATE TREATMENT UNITS PROVIDES RATE TREATMENT INFORMATION TO MARKER.
	7,JF	CRU SW (0-9)	
		NONE	NO RATE TREATMENT REQUIRED.
1,2	7,ED	CGSA/ CGSB KEY	RATE TREATMENT GROUP A AND B CONTROLS THE RATE TREATMENT GROUP INDICATION TO MARKER.
		NONE	NO RATE TREATMENT REQUIRED.
1,2	7,RB	RC KEY (1-15)	RINGING COMBINATION MATCH THE RINGING COMBINATION RECEIVED BY THE MARKER FROM THE NUMBER GROUP.
	7,RC	RC KEY (1-10)	
		OTRC KEY	
	7,JF	RCU SW (1-10)	
	7,ZYH, ZYI	RCTI KEY	
1	1	ST/RL KEY	START AND RELEASE OPERATED TO ST INITIATES A TEST CALL. OPERATED TO RL CAUSES TEST CALL AND ALL ASSOCIATED CIRCUITS TO RELEASE.
3	1	REC KEY	RECORD CAUSES THE MARKER TO REQUEST A TROUBLE RECORD OF THE TEST CALL BEFORE IT RELEASES.

ISSUE 3

MARKER LINE VERIFICATION TEST (MLV)

BELL TELEPHONE LABORATORIES INCORPORATED

DWG SIZE 6S

SFD-10-01-D913

PRINTED IN U.S.A.

SFD-10-01-D913

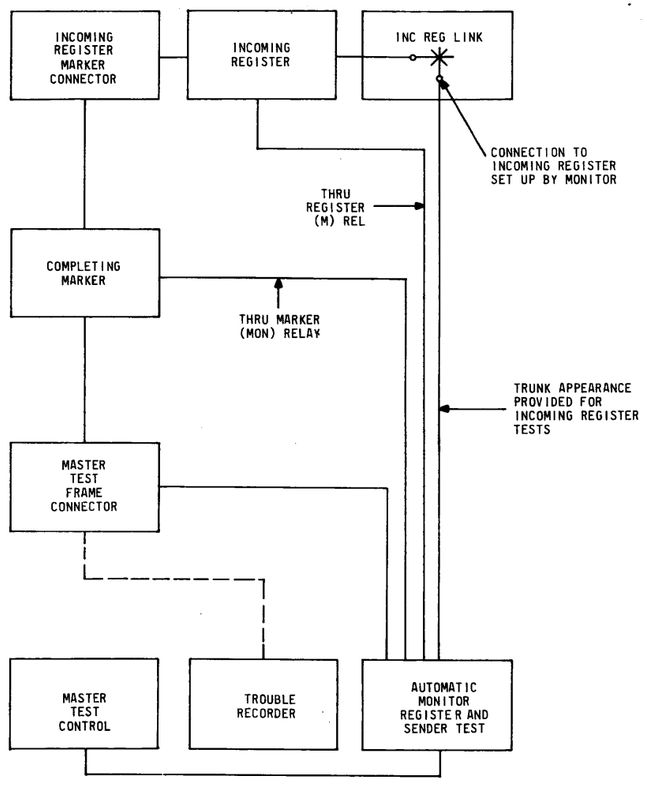

BSP-218-143-501, ISS 8 (MF)
BSP-218-137-501, ISS 6 (DP)

SD-25800-01 MASTER TEST CONTROL CIRCUIT (MTC)

SD-25680-01 AUTOMATIC MONITOR, REGISTER AND SENDER TEST CIRCUIT (AMRST)

SHEET NOTES:

1. KEY(S) OR SWITCH(ES) THAT MUST BE OPERATED TO PERFORM THIS CLASS OF TEST.
2. KEY(S) OR SWITCH(ES) USED TO SIMULATE TROUBLE RECORD (SEE SFD-D902/D904/D906).
3. KEY(S) OR SWITCH(ES) WHICH MAY BE OPERATED TO CAUSE ADDITIONAL ACTIONS OR TEST VARIATIONS FOR THIS PARTICULAR TEST.
4. KEY(S) OR SWITCH(ES) LOCATED ON AMRST PANEL.

SD-25800-01

SEE NOTE	FIG. OR OPT	KEY OR SWITCH	FUNCTION
1	75	IR KEY	INCOMING REGISTER TEST CLASS OPERATED DIRECTS THE TEST CIRCUIT TO CONNECT TO THE AUTOMATIC MONITOR, REGISTER AND SENDER TEST CIRCUIT, WHICH CONNECTS TO THE INCOMING REGISTER UNDER TEST.
	74	TSTA SW (IR)	
1,2	ZVP, II	IC KEY (OA/OB/AB)	INCOMING CLASS OPERATED CONTROLS THE INCOMING CLASS TRANSMITTED TO THE INCOMING REGISTER UNDER TEST ON IR CLASS OF TEST.
	CY, II	IC SW (OA/OB/AB)	
	NQ, II	TCL SW (0-10)	
		ICL SW (INC)	
		TRNC SW (OA/OB) OR TRNA SW (FVD)	
		CL SW (TCA/TCB)	
1,2	4,KX, KY,	A-E (0-9) KEY	DIGITS OPERATED TO CONTROL THE DIGITS TO BE USED BY THE AUTOMATIC MONITOR IN TESTING A INCOMING REGISTER.
	4,ZVL, ZVM	A-E SW (0-9)	
1,2, 4		IG (0-14) KEY	INCOMING REGISTER GROUP OPERATED TO SELECT AN INCOMING REGISTER LINK GROUP FOR TEST.
		IRG-SEL SW (0-14)	
		IRG-SEL SW (0-9)	
		IRGT KEY	
1,2, 4		SRS (0-9) KEY	SENDER OR REGISTER SELECTION SELECTS A PARTICULAR INCOMING REGISTER FOR TEST.
		SRS SW (0-9)	
1,4		MAC KEY	MONITOR AC OPERATED TO ENERGIZE THE FILAMENTS OF THE AMRST VACUUM TUBES.
1,4		STT KEY	START TEST OPERATED TO CONDITION THE AMRST CIRCUIT FOR THE START OF TESTING.
1,4		SURGE KEY	SURGE PROVIDES FOR TESTING THE DIAL PULSE REGISTER CIRCUIT ON A SURGE HOLD CONDITION. (DP ONLY)
		STP KEY	START PULSE OPERATED TO CHECK THE MF REGISTER FOR A PREMATURE START PULSE. (MF ONLY)
1,4		BL KEY	BY-LINK PROVIDES FOR MAKING BY-LINK LR TEST OF DIAL PULSE INCOMING REGISTERS. (DP ONLY, BY-LINK PULSING TRUNKS).
		NONE	NON BY-LINK OPERATION.
1	1	ST/RL KEY	START AND RELEASE OPERATED TO ST INITIATES A TEST CALL. OPERATED TO RL CAUSES TEST CALL AND ALL ASSOCIATED CIRCUITS TO RELEASE.
3	3	REP KEY	REPEAT KEY CAUSES A TEST CALL TO A REGISTER TO BE REPEATED AFTER SUCCESSFUL CHECK BY THE AUTOMATIC MONITOR.

ISSUE 4

SFD-10-01-D914

INCOMING REGISTER CLASS OF TEST
DP,MF REGISTER

PRINTED IN U.S.A.

FORM SIZE 6S

BELL TELEPHONE LABORATORIES INCORPORATED

CBL-296(10-75)

SFD-10-01-D914

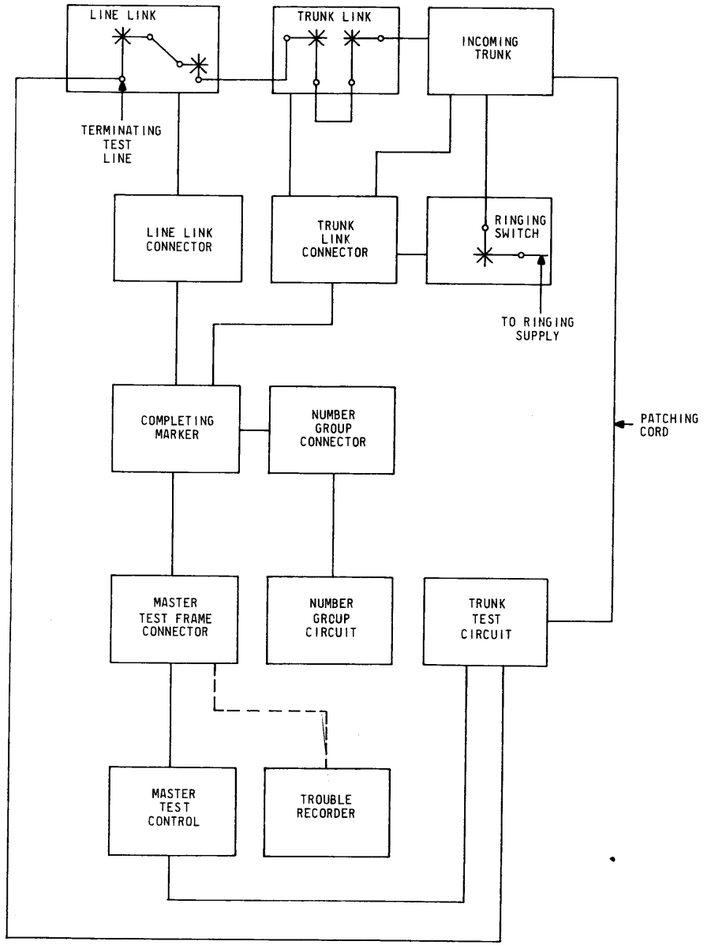

BSP 218-251-501, ISS 9

SD-25800-01 MASTER TEST CONTROL CIRCUIT (MTC)
SD-25918-01 TRUNK TEST CIRCUIT (TTC)

SHEET NOTES:

1. KEY(S) OR SWITCH(ES) THAT MUST BE OPERATED TO PERFORM THIS CLASS OF TEST.
2. KEY(S) OR SWITCH(ES) USED TO SIMULATE TROUBLE RECORD (SEE SFD-D902/D904/D906).
3. KEY(S) OR SWITCH(ES) WHICH MAY BE OPERATED TO CAUSE ADDITIONAL ACTIONS OR TEST VARIATIONS FOR THIS PARTICULAR TEST.
4. SELECT DIGITS AS REQUIRED FOR LOCAL COMPLETION TO PERMANENT OVERFLOW OR FREE TERMINATING TEST LINE.

SD-25800-01

SEE NOTE	FIG. OR OPT	KEY OR SWITCH	FUNCTION
1	68, ZO	ITNP KEY	INCOMING TRUNK NO PULSING CAUSES THE TEST CIRCUIT TO CONNECT TO THE TRUNK TEST CIRCUIT WHICH HAS BEEN PREVIOUSLY PATCHED TO THE INCOMING TRUNK TO BE TESTED.
	74	TSTB SW (ITNP)	
1	4	TTL KEY	TERMINATING TEST LINE OPERATED ON A TRUNK TEST TO TRANSMIT THE D-G DIGITS OF THE TERMINATING TEST LINE TO THE MARKER.
1,2	7,RB	RC (1-15) KEY	RINGING COMBINATION CONTROLS THE RINGING COMBINATION SET UP BY THE MARKER ON THE RINGING SELECTION SWITCH.
	7,RC	RC (1-10) KEY	
		OTRC KEY	
	7,JF	RCU SW (1-10)	
	7,ZYH, ZVI	RCT I KEY	
1		LS KEY	LOW RESISTANCE SLEEVE OPERATED PLACES A LOW RESISTANCE RELAY ON THE SLEEVE TO THE TRUNK TO DETECT WHEN AN INCOMING REGISTER IS CONNECTED AND TO INFORM THE REGISTER THAT A TEST CALL IS IN PROGRESS. KEY LOC ON TRUNK TEST PANEL.
1		SXS KEY	STEP-BY-STEP OPERATED WHEN TESTING INCOMING TRUNKS FROM A STEP-BY-STEP OFFICE. KEY LOC ON TRUNK TEST PANEL.
1		TLK KEY	TALK USED TO COMPLETE TIP AND RING LEADS TO SIMULATE LINE AT MTF JACK, LAMP, AND KEY CIRCUIT. KEY LOC ON TRUNK TEST PANEL.
1	1	ST/RL KEY	START AND RELEASE OPERATED TO ST INITIATES A TEST CALL. OPERATED TO RL CAUSES TEST CALL AND ALL ASSOCIATED CIRCUITS TO RELEASE.
3		ANS KEY	ANSWER KEY OPERATES ANS RELAY WHICH SUPPLIES TERMINATING RESISTANCE TO THE CALLED SUPERVISORY RELAY OF THE INCOMING TRUNK CIRCUIT. AT THE SAME TIME RELAY LK CHECKS THE CONTINUITY OF THE LOOP AND CONNECTS HIGH TONE BACK THROUGH THE TRUNK CIRCUIT. KEY LOC ON TRUNK TEST PANEL.
3	1	REC KEY	RECORD CAUSES MARKER TO REQUEST A TROUBLE RECORD OF THE TEST CALL BEFORE RELEASING.
3		TRP KEY	TRIP APPLIES A TRIP TEST TO THE RT RELAY IN THE INCOMING TRUNK. KEY LOC ON TRUNK TEST PANEL.
3		PTP KEY	PRETRIP APPLIES A PRETRIP TEST TO THE RT RELAY IN THE INCOMING TRUNK. KEY LOC ON TRUNK TEST PANEL.
3	4, KX	A-E (0-9) KEY	DIGITS DIRECTORY NUMBER OF LINE BEING TESTED WHEN KY KEY IS OPERATED.
	4, ZVL	A-E SW (0-9)	SEE NOTE 4
3	4	KY KEY	CONNECT NUMBER ALLOWS ANY NUMBER OF KEYS OR SWITCHES A(0-9) THRU E(0-9) TO BE TRANSMITTED TO THE MARKER.

SD-25800-01

SEE NOTE	FIG. OR OPT	KEY OR SWITCH	FUNCTION
3	4	BB KEY	BUSYBACK CAUSES A PERMANENTLY BUSY NUMBER TO BE TRANSMITTED TO THE MARKER.

ISSUE 4

INCOMING TRUNK TEST-NO PULSING (ITNP)

BELL TELEPHONE LABORATORIES INCORPORATED

SFD-10-01-D915

SFD-10-01-D915