BELL SYSTEM PRACTICES
AT&TCo Standard

551-100-101
Issue 1, May 1975

Task Oriented Practice
(TOP)

756A PBX

VOLUME 2 OF 2

REPAIR

BELL SYSTEM PRACTICES
AT&TCo Standard

551-100-101
Issue 1, May 1975

Task Oriented Practice
(TOP)

756A PBX

VOLUME 2 OF 2

REPAIR

NOTE

Before using TOP for the first time, complete the TOP-USER Plant Training Course—PTC No. 278.

TROUBLE INDICATED	PROCEDURE NUMBER
Alarm troubles should normally be cleared first. For general trouble clearing information (including marker), refer to General 756A PBX Trouble Clearing—TAD-163.	
ALARM LAMP ON AT SLIDE 1:	
COAL (Camp-on Alarm Lamp)	TAP-100
EXT (External)	TAP-101
FA (Fuse Alarm)	TAP-102
JRAL (Junctor Register Alarm Lamp)	TAP-103
LAL1 (Link Test Alarm Lamp 1)	TAP-104
LAL2 (Link Test Alarm Lamp 2)	TAP-105
MAL (Miscellaneous Alarm Lamp)	TAP-106
PA (Power Alarm)	TAP-107
RLAL (Release Alarm Lamp)	TAP-108
TRAL (Tens Release Alarm Lamp)	TAP-109
TAL (Tens Alarm Lamp)	TAP-110
TS (Test)	TAP-111
TOAL (Time-out Alarm Lamp)	TAP-112
TAAL (Trouble Advance Alarm Lamp)	TAP-113
UAL (Units Alarm Lamp)	TAP-114
UAL1 (Units Alarm Lamp 1)	TAP-115
UAL2 (Units Alarm Lamp 2)	TAP-116
XCAL (Cross-check Alarm Lamp)	TAP-117
(continued on page 2)	

TROUBLE INDICATED	PROCEDURE NUMBER
ALARM LAMP ON AT CONSOLE:	
TR (Trouble) — *Check Other Alarm Lamps in Slide 1*	
ARB (All Registers Busy)	TAP-118
FAILURE REPORTED WITH PROGRESS OF CALL FROM:	
Attendant Trunk-to-Station	TAP-119
CO Trunk-to-Station	TAP-120
Incoming Ringdown Tie Trunk-to-Station	TAP-121
Outgoing Manual and Dial Selected Tie Trunk	TAP-122
Station-to-Attendant Trunk	TAP-123
Station-to-CO Trunk	TAP-124
Station-to-Station	TAP-125
FAILURE REPORTED WITH:	
Attendant Audible Signal	TAP-126
Attendant Can't be Called on CO Trunk	TAP-127
Attendant-Controlled Dial Conference	TAP-128
Attendant Direct Station Selection	TAP-129
Attendant Dial Back Trouble	TAP-130
Attendant Transfer	TAP-131
Attendant Trunk-to-Station Hold	TAP-132
Busy-Tone Trunk	TAP-133
(continued on page 3)	

TROUBLE INDICATED	PROCEDURE NUMBER
FAILURE REPORTED WITH: (cont'd)	
Busy Verification	TAP-134
Call Transfer Individual (Was Station Dial Transfer)	TAP-135
Camp-On	TAP-136
Console CO or Attendant Trunk Lamp	TAP-137
Console Key	TAP-138
CO Trunk Release	TAP-139
Dial 0	TAP-140
Intercept	TAP-141
Meet-Me-Type Conference	TAP-142
Message Waiting	TAP-143
Night Service	TAP-144
Paging	TAP-145
PBX Dialing	TAP-146
PBX Dial Tone	TAP-147
Power Failure Transfer	TAP-148
Recorded Telephone Dictation	TAP-149
Ringdown Tie Trunk	TAP-150
Station Can't Be Called	TAP-151
Station Can't Call Out on CO Trunk	TAP-152
Station-Controlled Dial Conference	TAP-153
Station False Busy	TAP-154
(continued on page 4)	

TROUBLE INDICATED	PROCEDURE NUMBER
FAILURE REPORTED WITH: (cont'd)	
Station Inward Restriction	TAP-155
Station Message Register	TAP-156
TOUCH-TONE®	TAP-157
Traffic Measurement	TAP-158
Traffic Register	TAP-159
Trunk Answer From Any Station (Was Remote Trunk Answer)	TAP-160
3A Code Call	TAP-161
556A Switchboard	TAP-162

[1] Connect 1014A handset to test line **STA 39** operating **TALK** key, then originate camp-on call from console to **STA 39**

[2] See FIG. 1. Are any **LT–(2-9)** relays (slide 6P) operated

No → [6] Are camp-on relays (**COAA, COBA, CONBA,** and **CONAA**) in state shown in FIG. 1 during link testing sequence of marker

Yes → [3] Is **COAL** relay (slide 1AB) operated

Yes → [5] Check for foreign ground causing **COAL** relay to operate using cabling diagram SD-65746 and FIG. 1

No → [4] See FIG. 2. Check for foreign ground causing **COAL** lamp (slide 1) to light

[10] Depress **AR** key (slide 1)

[6] Are camp-on relays (**COAA, COBA, CONBA,** and **CONAA**) in state shown in FIG. 1 during link testing sequence of marker

No → [7] Check operate path for camp-on relays (slide 6R, S, T) using SD-65741, sheet B16 to locate and clear trouble

Yes → [8] See FIG. 1. Check **LT–(2-9)** relay circuit operate paths [FIG. 3] to determine why **LT** relay of seized link did not operate

[7] → [9] Depress **AR** key (slide 1)

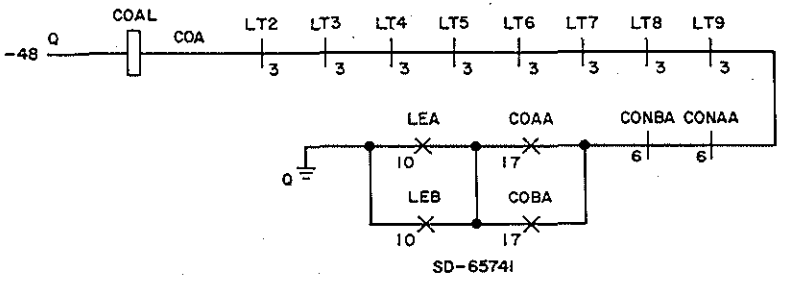

FIG. 1

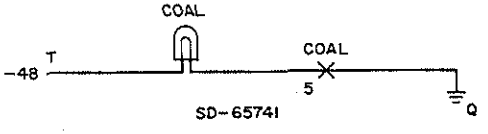

FIG. 2

Issue 1	May 1975
551-100-101	TAP
Page 1 of 2	100

CLEAR CAMP-ON ALARM (COAL) TROUBLE

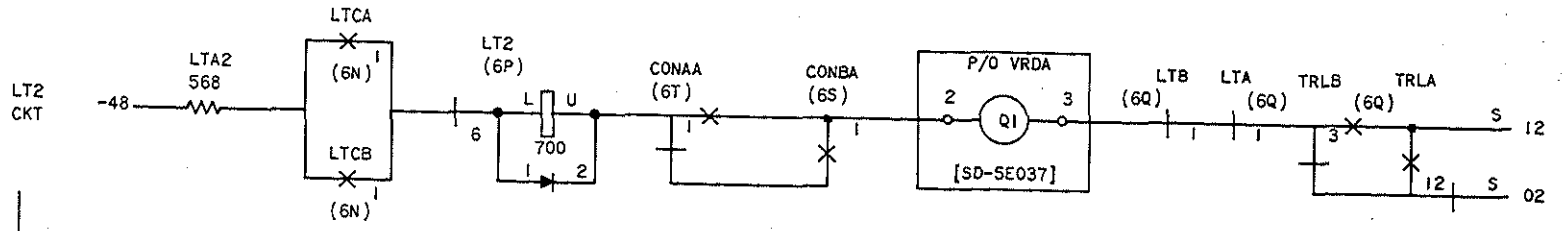

LT CKT	RESISTOR DESIG.	LTC(A,B) CONTACTS	LT RELAY	CON (AA, BA) CONTACTS	VRD-CONNECTIONS	LT(A, B) CONTACT	TRL(A, B) CONTACTS
LT3	LTA3	2	LT3	AA 2, BA 2	4 VRDA Q2 5	2	B 4, A11
LT4	LTA4	3	LT4	AA 3, BA 3	6 VRDA Q3 7	3	B 6, A10
LT5	LTA5	4	LT5	AA 4, BA 4	8 VRDA Q4 9	4	B 7 A9
LT6	LTA6	5	LT6	AA 9 BA 9	2 VRDB Q1 3	9	A 3, B12
LT7	LTA7	6	LT7	AA10, BA10	4 VRDB Q2 5	10	A 4, B11
LT8	LTA8	7	LT8	AA11, BA11	6 VRDB Q3 7	11	A 6, B10

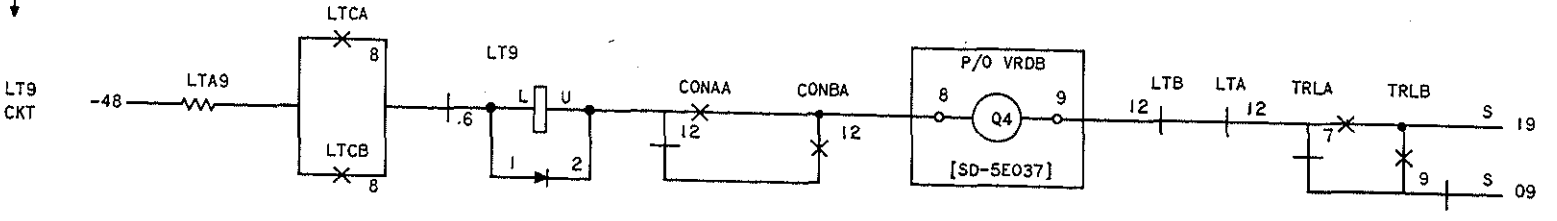

FIG. 3

Issue 1	May 1975
551-100-101	TAP
Page 2 of 2	100

CLEAR CAMP-ON ALARM (COAL) TROUBLE

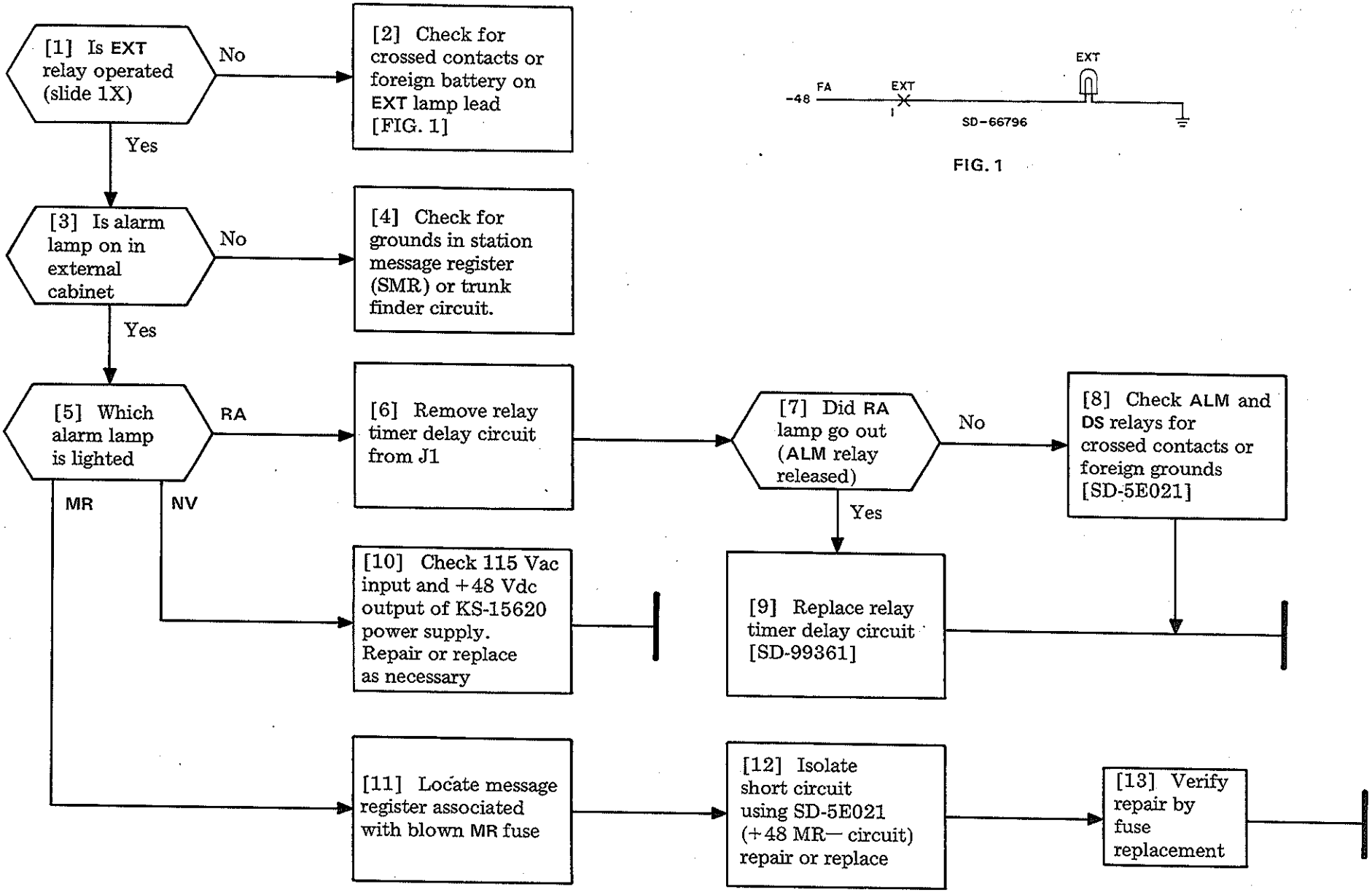

FIG. 1

CLEAR EXTERNAL (EXT) ALARM TROUBLE

Issue 1	May 1975
551-100-101	TAP
PAGE 1 of 1	101

SUMMARY

For any blown fuse, TABLE A gives the associated circuit and equipment location. Using this information, repair any defects found on inspection and replace blown fuse. If fuse blows again, trouble must be isolated using the associated schematic drawing listed in TABLE A. See EXAMPLE on page 3.

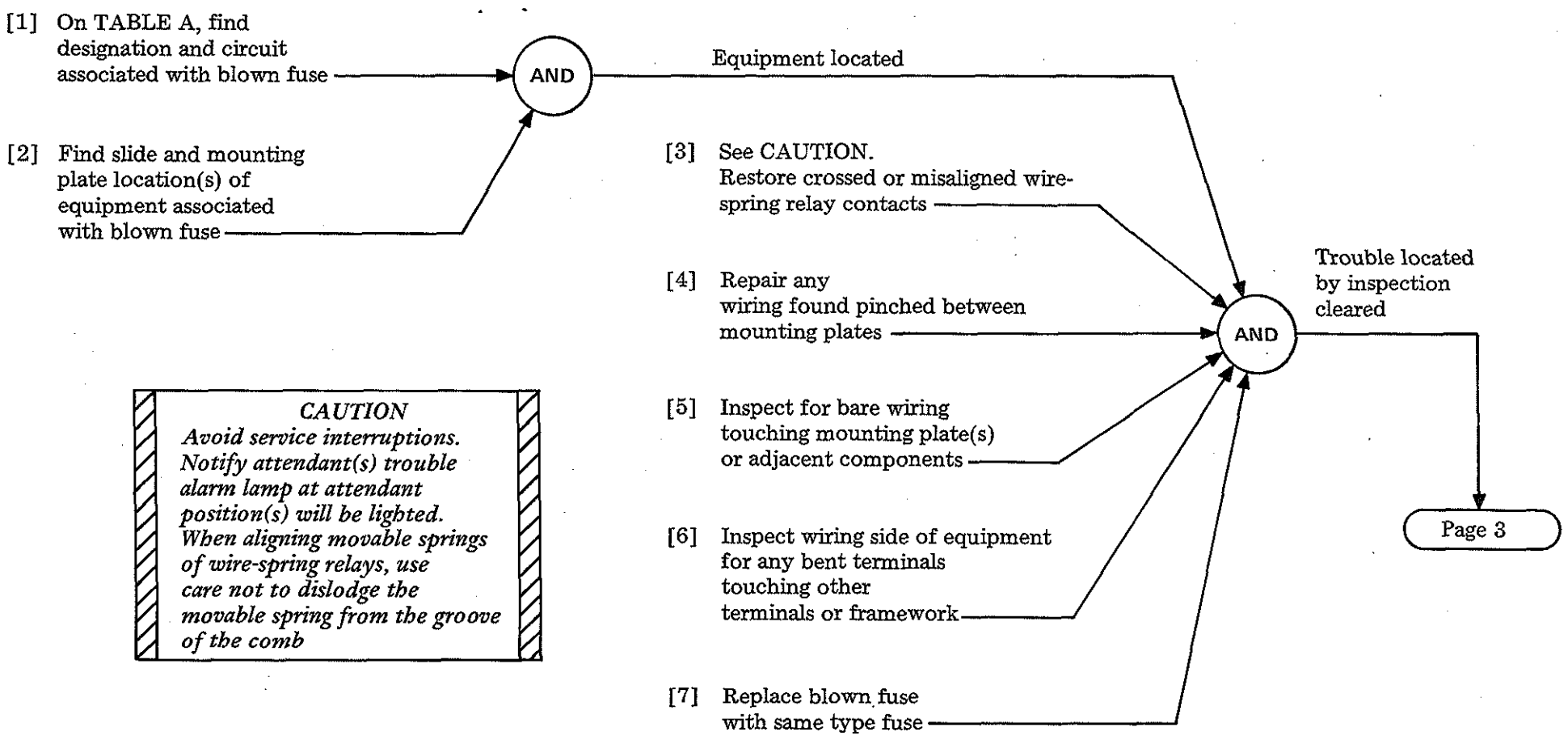

CAUTION

Avoid service interruptions. Notify attendant(s) trouble alarm lamp at attendant position(s) will be lighted. When aligning movable springs of wire-spring relays, use care not to dislodge the movable spring from the groove of the comb

Issue 1	May 1975
551-100-101	TAP
Page 1 of 4	102

CLEAR FUSE ALARM (FA) TROUBLE

TABLE A

LOCATION OF EQUIPMENT ASSOCIATED WITH BLOWN FUSE AT SLIDE 1, MOUNTING PLATE Y OR Z (SD-66796-01*)

FUSE		LOC OF ASSOC EQ		FUSE		LOC OF ASSOC EQ		FUSE		LOC OF ASSOC EQ		FUSE		LOC OF ASSOC EQ	
DESIG	CIRCUIT	SLIDE AND MTG PLT	SCHEMATIC DRAWING	DESIG	CIRCUIT	SLIDE AND MTG PLT	SCHEMATIC DRAWING	DESIG	CIRCUIT	SLIDE AND MTG PLT	SCHEMATIC DRAWING	DESIG	CIRCUIT	SLIDE MTG PLT	SCHEMATIC DRAWING
A	MARKER	6AB	65741-01	FT	POWER SUPPLY	1W, 6S	SD-81326-02	A5	STA MESS. REG 5-9	†	5E021-01	SD	SWBD †	†	‡
AT0	ATND TRUNK 0-2	4N, 5Y	65753-01	G	MARKER	2L, 6T	65741-01	A6				SE			
AT1		4T, 5Z		H		2L, 6S		A7				SF			
AT2		4T, 5AA		J		6R		A8				SG			
AP1	ATND POS1, 2	5V	65757-01	JT0	JUNCTORS 0-5	3T	65750-01	A9				T	MARKER	1AB	65741-01
AP2		5J		JT1		3T		M	MARKER	1AA, 6AA	65741-01	T0		4AA, 6AB	
B	MARKER	6AB	65741-01	JT2		3U		N		6Z		T1		4AA, 6AA	
BT	BUSY TONE	4AA	65754-01	JT3		4Y		P		6Z		T80	TIE, DIAL CONF, REC TEL DICT, 3A CODE CALL, MISC, ETC. 80-89	2N	
C	MARKER	6Z	65741-01	JT4		4Y		Q		1AA, 6J		T81		2N	
C00	CO TRUNKS 0-9	4T, 5B	65752-01	JT5		3U		R		6AB		T82		2N	
C01		4T, 5D		K		6R		RA0	REGISTER 0	6C	65742-01	T83		2N	
C02		4T, 5F		L		1AA, 6AA		RB0		4T, 6C		T84		2N	
C03		4T, 5J		L2	MARKER	2P, 6Z	65741-01	RC0		6C		T85		2P, 3V	
C04		4T, 5J		L3		2L, 6Z		RA1	REGISTER 1	6F		T86		2P, 3V	
C05		4N, 5N		L4		3L, 6Z		RB1		3N, 6F		T87		2P, 3V	
C06		4N, 5Q		L5		3L, 6Z		RC1		6F		T88		2P, 3V	
C07		4N, 5S		L6		4L, 6Z		S	MARKER	3V, 6Q	65741-01	T89		2P, 3V	
C08		4N, 5V		L7		4L, 6Z		S0		2F, 4T		TR	TRAFFIC REG	1W	5E010-01
C09		4N, 5V		TTA	POWER SUPPLY	1A		S1		2F, 4T		UA	MARKER	6V	65741-01
D	MARKER	6Z	65741-01	TTB		1A		S23		2G, 4U		UB		6V	
E		6Y		A0	STA MESS. REG 0-4	†	5E021-01	S45		2H, 4V		X		6U	
F		6X		A1				S67		2J, 4W		Y		6U	
FA	ALARM, TRFR, AND TEST	2L, 5J	66796-01*	A2				S89		2K, 4X		IR	INWARD REST	†	5E003-01
FC1	POWER SUPPLY	1B	SD-81326-02	A3				SB	SWBD	†	‡	DSS	DIRECT STA SEL	†	65742-01
FC2		1B		A4				SC				Z	MARKER	6T	65741-01
												MBD	MAKE-BUSY	2AB	5E029-01

* REPLACED SD-65743-01 WHICH WAS RATED MD IN MARCH 1962
† EXTERNAL
‡ MAY BE 556- OR 608-TYPE SWITCHBOARD DRAWINGS

[8] Does fuse blow again on next call using same equipment components

Yes

[9] Find the battery lead (fuse designation) first in A, then G sheets of cabling diagram (SD-65746-01). Locate point(s) where lead terminates on equipment. See EXAMPLE and FIG. 1

[10] On TABLE A, find main schematic drawing number associated with blown fuse

No

Trouble may be considered cleared or transient

CAUTION
Avoid service interruptions. Notify attendant(s) trouble alarm lamp at attendant position(s) will be lighted. When aligning movable springs of wire-spring relays, use care not to dislodge the movable spring from the groove of the comb

[11] See CAUTION. Isolate circuit branches by opening leads, insulating relay contacts, etc., until fault is located and trouble is cleared

[12] Reconnect circuit branches and restore to normal all components disabled for testing

[13] Replace blown fuse with same type fuse

EXAMPLE

If ATO fuse is blown, TABLE A shows that the circuit is attendant trunk 0 and the associated equipment is located both at slide 4, mounting plate N, and at slide 5, mounting plate Y. Sheet A2 of cabling diagram SD-65746-01 shows ATO battery lead is located on sheets G41 and G46. See FIG. 1. Sheet G41 shows the ATO battery lead terminates on lower winding terminal of trunk hold magnet for vertical 0, crossbar switch 8. Sheet G46 shows ATO battery lead also terminates on 1 lower (winding terminal) of AC relay. TABLE A identifies SD-65753-01 as the attendant trunk schematic drawing.

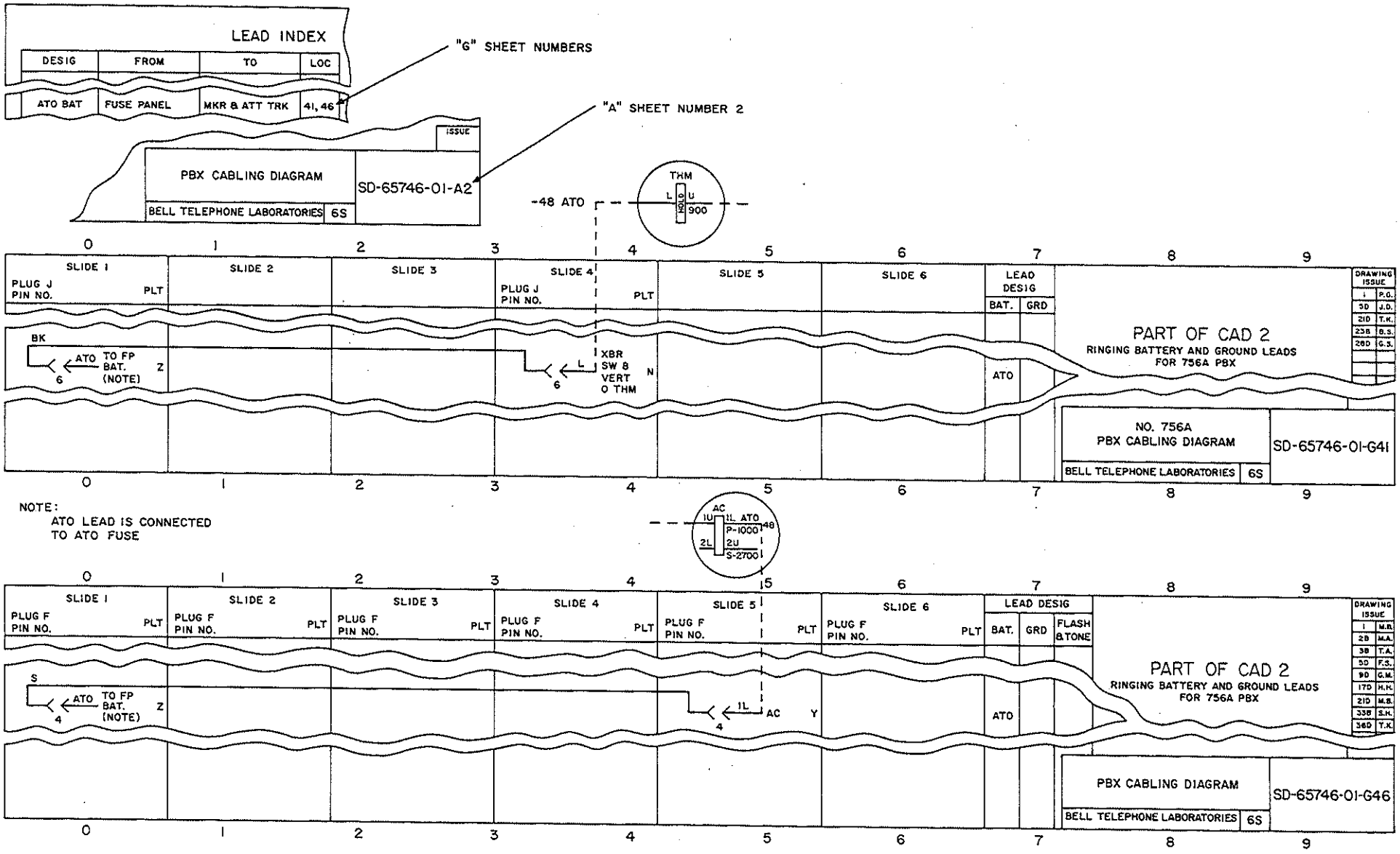

FIG. 1

Issue 1	May 1975
551-100-101	TAP
Page 4 of 4	102

CLEAR FUSE ALARM (FA) TROUBLE

[1] Originate a station-to-station call to test line STA 39 using handset 1014A or equivalent. [TAD-163 and NOTE 1]

[2] Is any relay JR–(0-5) at slide 6X operated [FIG. 1]

No → [3] Check operate path of JR relays and clear trouble using SD-65741, sheet B13

Yes

[4] Are JREA or JREB relays (slide 6X, Y) operated

No → [5] See FIG. 2. Check for shorted or crossed contacts in JR relays causing JREA and JREB relays not to operate [NOTE 2]

Yes

Page 2

[6] Depress AR key (slide 1)

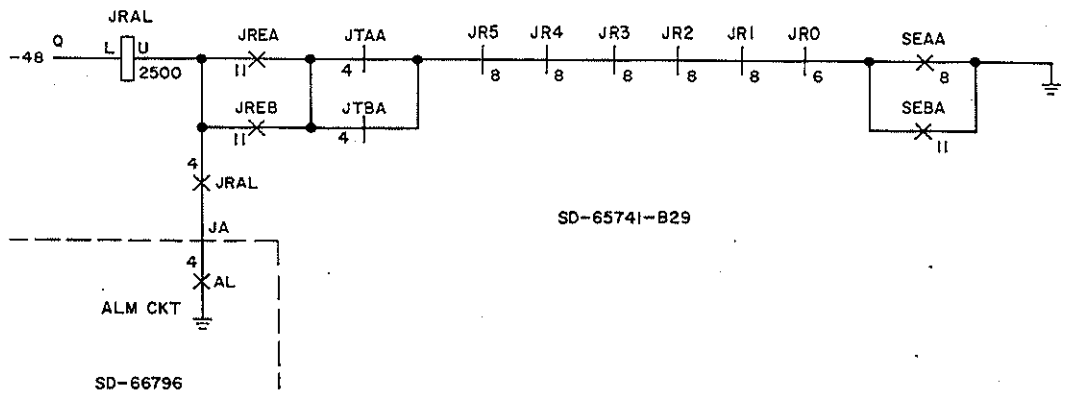

FIG. 1

NOTES

1. This is a junctor class call and will exercise the junctor relays and circuit and indicate the JRAL alarm condition
2. JREA and JREB relays should operate only when one of relays JR–(0-5) operate

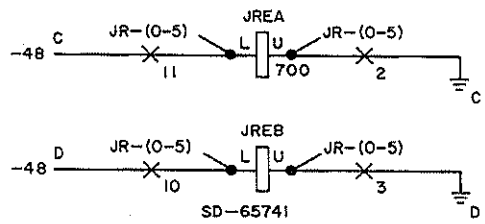

FIG. 2

CLEAR JUNCTOR REGISTER ALARM (JRAL) TROUBLE

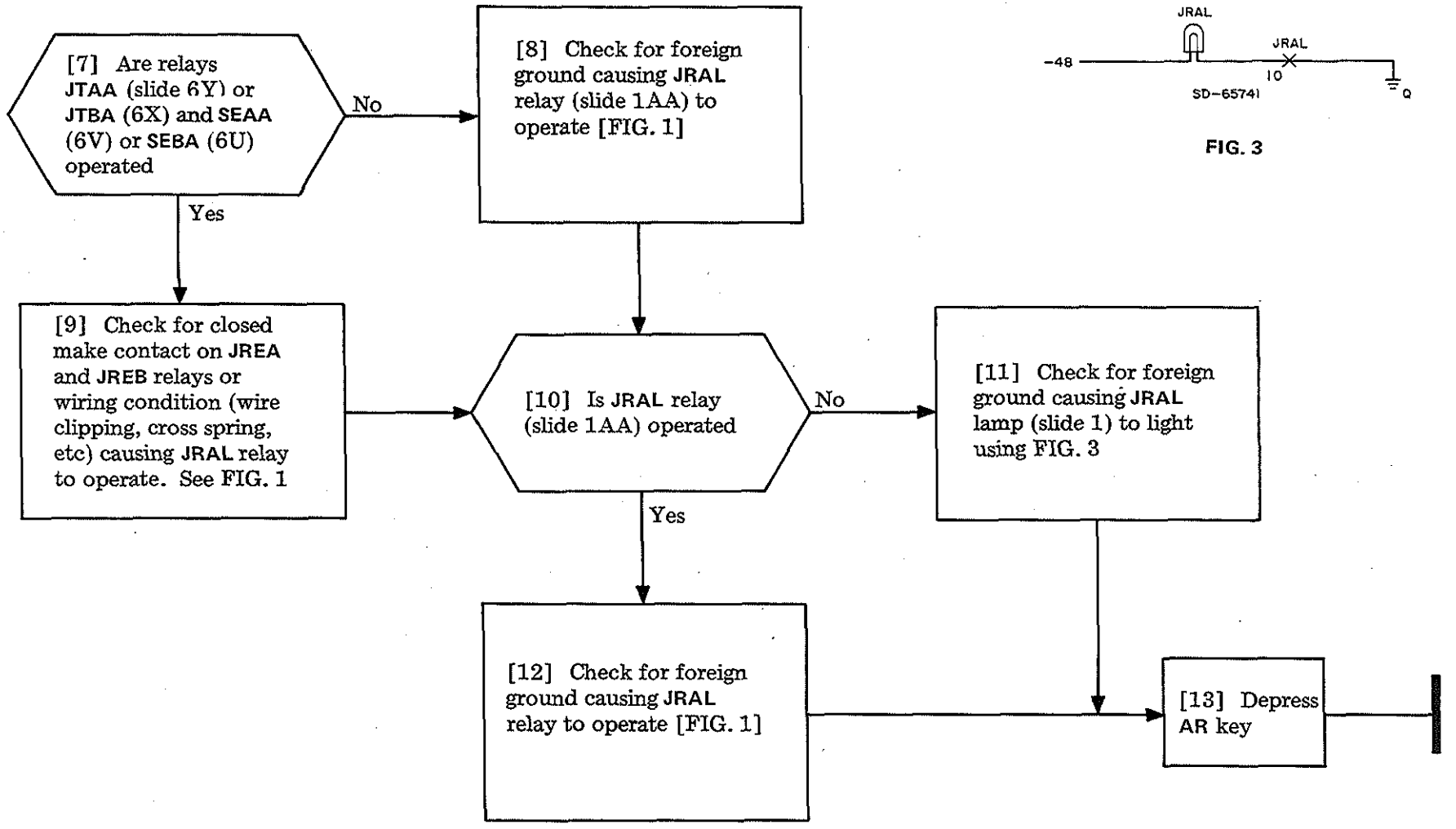

FIG. 3

CLEAR JUNCTOR REGISTER ALARM (JRAL) TROUBLE

[1] Connect test handset to test line Station 39 and originate station-to-station, trunk-to-station, or trunk-to-trunk (use camp-on condition)

[2] See TABLE A. Check for operation of relay pairs [NOTE 1]

NOTE 1
If both relays in a pair are not operated or released at the same time, LAL1 relay will operate

[3] Did each relay pair operate or release together

No → [4] Determine relay pair out of sequence. Locate and clear trouble [TABLE A] → [5] Depress AR key (slide 1)

Yes → [6] See FIG. 1. Check for operation of LCK1 or LCK2 relay (slide 6P) causing LAL1 relay to operate → Page 2

TABLE A			
RELAY PAIR	CONTACTS TO INSULATE	SLIDE NUMBER	SD-65741 SHEET NUMBER
LTAA/LTBA	7M, B/7M, B	6Q	B40
COA/COB	4M, B/4M, B	6T/6S	B16
CONA/CONB	8M, B/8M, B	6T/6S	B16
CONA/CONAA	6M, B/6 & 7M, B	6T	B16
CONB/CONBA	6M, B/6 & 7M, B	6S	B16
COSA/COSB	1M, B/1M, B	6P	B40
LEAA/LEBA	9M, B/9M, B	6Q	B38
LEA/LEAA	6M, B/6M, B	6Q	B38
LEB/LEBA	6M, B/6M, B	6Q	B38
TRLA/TRLB	5M, B/5M, B	6Q	B40
WIL/WILA	10M, B/12M, B	6L/6M	B24/32
WL/WLA	8M, B/1M, B	6L/6M	B24/32

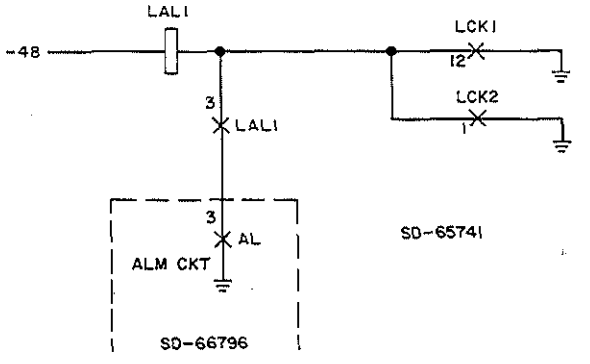

FIG. 1

Issue 1	May 1975
551-100-101	TAP
PAGE 1 of 3	104

CLEAR LINK TEST ALARM (LAL1) TROUBLE

[7] Did **LCK1** or **LCK2** relay operate

Yes → [8] Check for foreign grounds on leads SM0-9 (SD-65741, sheets B24 and 28) and clear trouble → [12] Depress **AR** key

No → [9] Check operation of **WLG** and **WLGA** relays (slide 6M)

NOTE 2
The operation of **WLG** and **WLGA** relays together will cause **LAL1** relay to operate [FIG. 3]

[10] Do **WLG** and **WLGA** relays operate together [NOTE 2]

Yes → [11] Check operate path for **WLG** and **WLGA** relays [FIG. 2] to clear trouble

No → Page 3

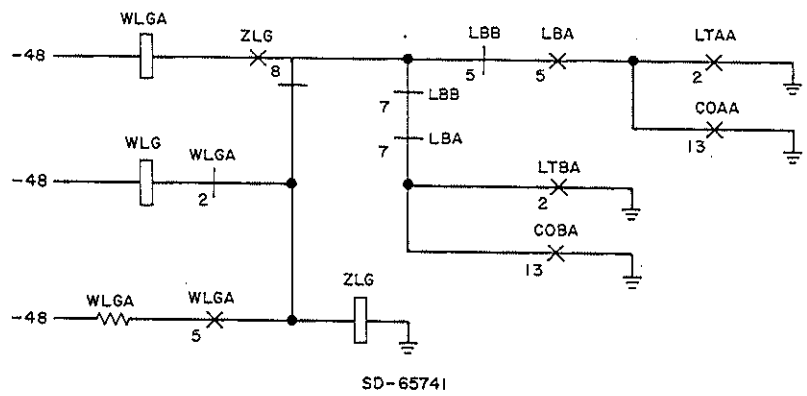

FIG. 2

CLEAR LINK TEST ALARM (LAL1) TROUBLE

Issue 1	May 1975
551-100-101	TAP
PAGE 2 of 3	104

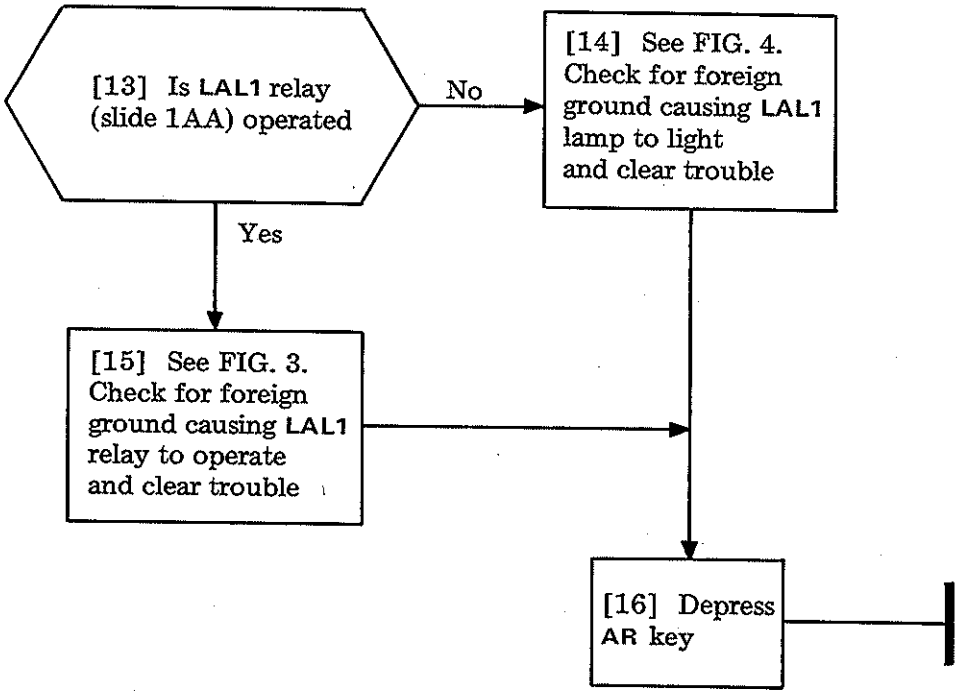

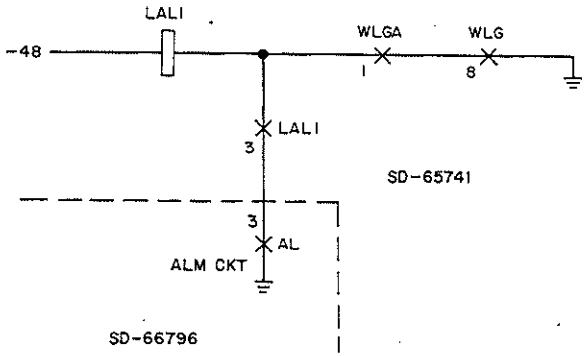

FIG. 3

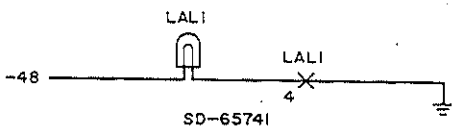

FIG. 4

CLEAR LINK TEST ALARM (LAL1) TROUBLE

[1] Connect 1014A handset to test line STA 39 and originate station-to-station calls [TAD-163]

[2] See FIG. 1. Check for operation of relay pairs LBA, B; ALBA, B; and SMTA, B (slides 6P and 6Q) [NOTE]

[3] Did relay pairs LBA, B; ALBA, B; and SMTA, B operate together

No → [4] See FIG. 1. Determine relay pair out of sequence and clear trouble condition → [5] Depress AR key

Yes → Page 2

NOTE
If both relays in a pair are not operated or released at the same time, LAL2 and LAL2A relays will operate

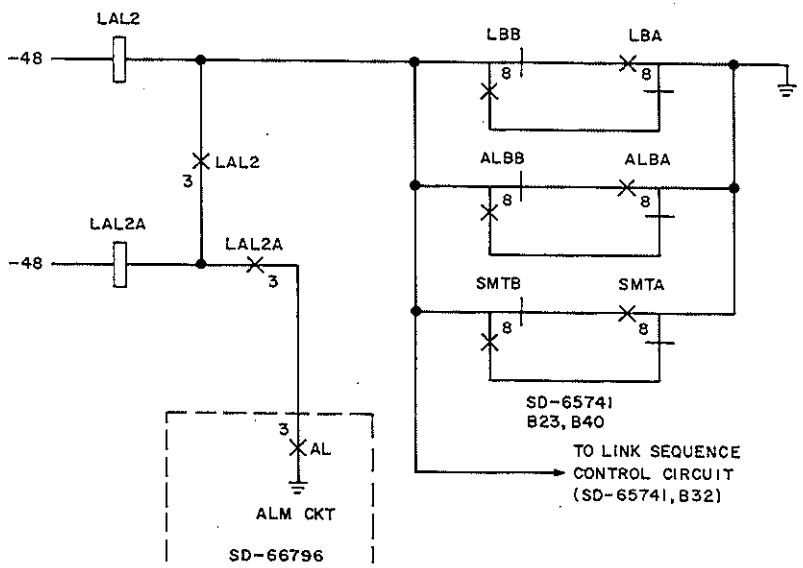

FIG. 1

CLEAR LINK TEST ALARM (LAL2) TROUBLE

[6] Check operation of relays in link sequence control circuit using SD-65741, sheet B32, by insulating relay contacts until trouble is located [TAD-163]

[7] Did link sequence control circuit operate without trouble

No → [8] Determine trouble condition by exercising marker and link circuits, isolating relays as indicated in step 2, and clear trouble

Yes

[9] Are LAL2 and LAL2A relays operated

No → [10] See FIG. 2. Check for foreign ground causing LAL2 lamp to light and clear trouble

Yes

[11] See FIG. 1. Check for foreign ground causing LAL2 and LAL2A relays to operate and clear trouble

[12] Depress AR key (slide 1)

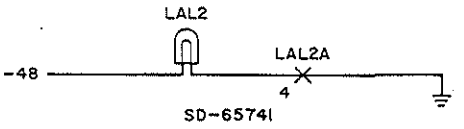

FIG. 2

CLEAR LINK TEST ALARM (LAL2) TROUBLE

[1] Using 1014A hand-set, originate station-to-station calls to test line STA 39 [TAD-163]

[2] See FIG. 1. Check for operation of relay pairs LUCA, B (slide 6V, U); BTCA, B (6T, S); HMKA, B (6V, U); and LTA, B (6Q) [NOTE]

NOTE
If both relays in a pair are not operated or released at the same time, MAL relay will operate

TABLE A		
RELAY	SD-65741 SHEET NO.	SLIDE LOC.
LUCA	B8A	6V
LUCB	B8A	6U
BTCA	B15	6T
BTCB	B15	6S
HMKA	B9	6V
HMKB	B9	6U
LTA	B22	6Q
LTB	B22	6Q

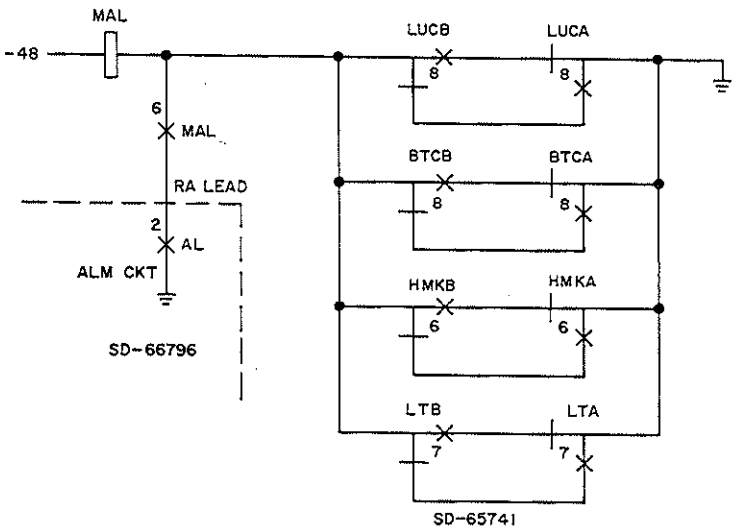

FIG. 1

[3] Does each relay pair operate at same time

Yes → [6] Is MAL relay (slide 1AB) operated

Yes → [8] See FIG. 1. Check for foreign ground causing MAL relay to operate

No → [7] Check for foreign ground causing MAL lamp to light [FIG. 2]

No → [4] Check circuit of relay pair (slide 6) not operating using associated B sheet of SD-65741 [TABLE A]

[4] → [5] Depress AR key

[7] → [9] Depress AR key (slide 1) to release all alarms

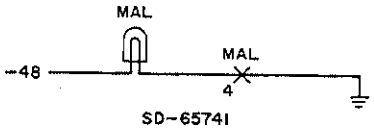

FIG. 2

CLEAR MISCELLANEOUS ALARM (MAL) TROUBLE

[1] At slide 1X, check for operaton of RB and S relays

[2] Which relays are operated

Neither

[3] Check relays for shorted contact or foreign battery operating PA lamp [FIG. 1]

S

RB

[10] Which fuse at slide 1E is blown

±10V

INT

[4] Did RB1 fuse blow (slide 1Y)

No

[5] Check RB alarm lead from fuse panel (TS2, term 9) to RB relay for foreign battery [SD-81577]

Yes

[11] Check ±10 Vac lead to attendant console for foreign ground [SD-66796]

[6] Check KS-15984 interrupter cam and contacts, V1 and associated components, and 107D frequency generator for grounds [SD-81577]

[7] Was trouble source found and corrected

Yes

[8] Replace RB1 fuse

No

[12] Check interrupter motor and circuit for short or foreign ground [SD-81577]

[13] Correct trouble and replace fuse

[9] Check for foreign grounds on R1 lead from J1 pin 21 [SD-65746, G113]

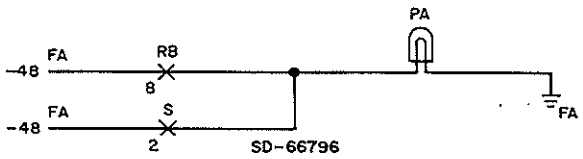

FIG. 1

CLEAR POWER ALARM (PA) TROUBLE (SD-66796)

Issue 1	May 1975
551-100-101	TAP
PAGE 1 of 1	107

[1] Originate station-to-station calls using 1014A handset or equivalent

NOTE
If both relays in a pair are not operated or released at the same time, the **RLAL** relay will operate [TAD-163]

[2] See FIG. 1. Check for operation of relay pairs: **RLSA, AA** (slide 6K); **RLSB, BA** (6J); **RLA, B** (6T, S); **RLSA, B** (6K, J); and **TSDA, B** (6R) [NOTE]

[3] Does each relay pair operate or release together

No → [5] Determine relay pair out of sequence and clear trouble using SD-65741, sheet B15, B18, B25A, F6, F7, or F10 → Page 3

Yes → [4] See FIG. 2. Check for operation of relays **RLA, RLAA,** and **RLAB** at same time (slide 6T) → Page 2

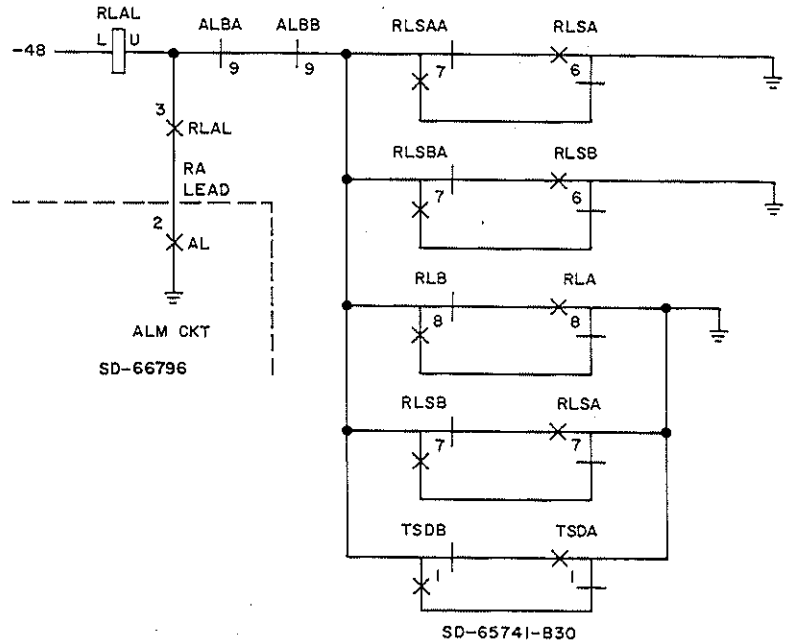

FIG. 1

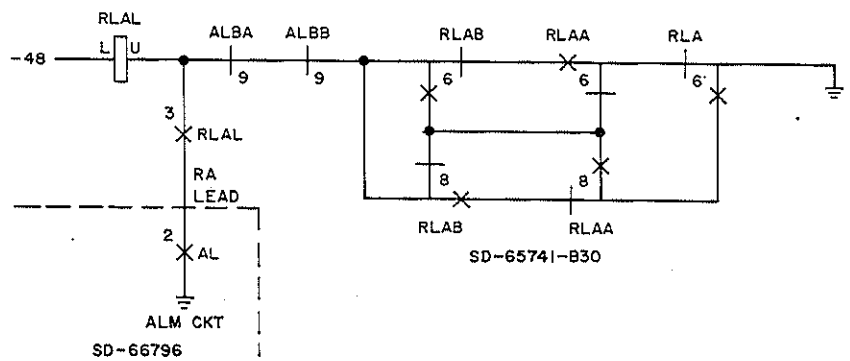

FIG. 2

Issue 1	May 1975
551-100-101	TAP
Page 1 of 3	108

CLEAR RELEASE ALARM (RLAL) TROUBLE

[6] Did RLA, RLAA, and RLAB relays operate together

No

Yes

[7] See FIG. 3. Check for operation of RLB, RLBB, and RLBA relays at same time (slide 6S)

[8] Did RLB, RLBB, and RLBA relays operate together

No

Yes

Page 3

[9] Determine relay out of sequence and clear trouble using SD-65741, sheet B15

[10] Depress AR key

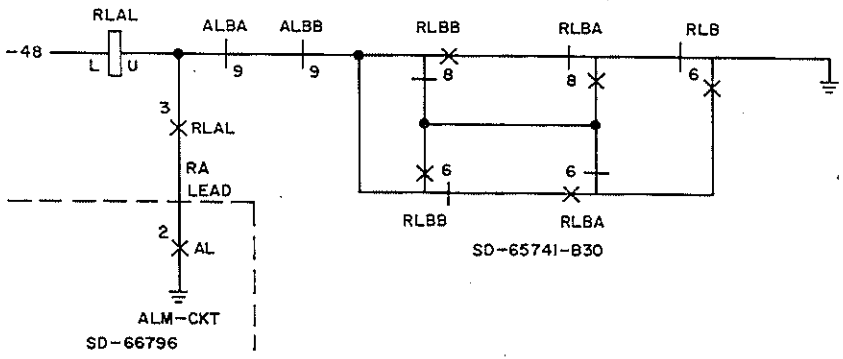

FIG. 3

CLEAR RELEASE ALARM (RLAL) TROUBLE

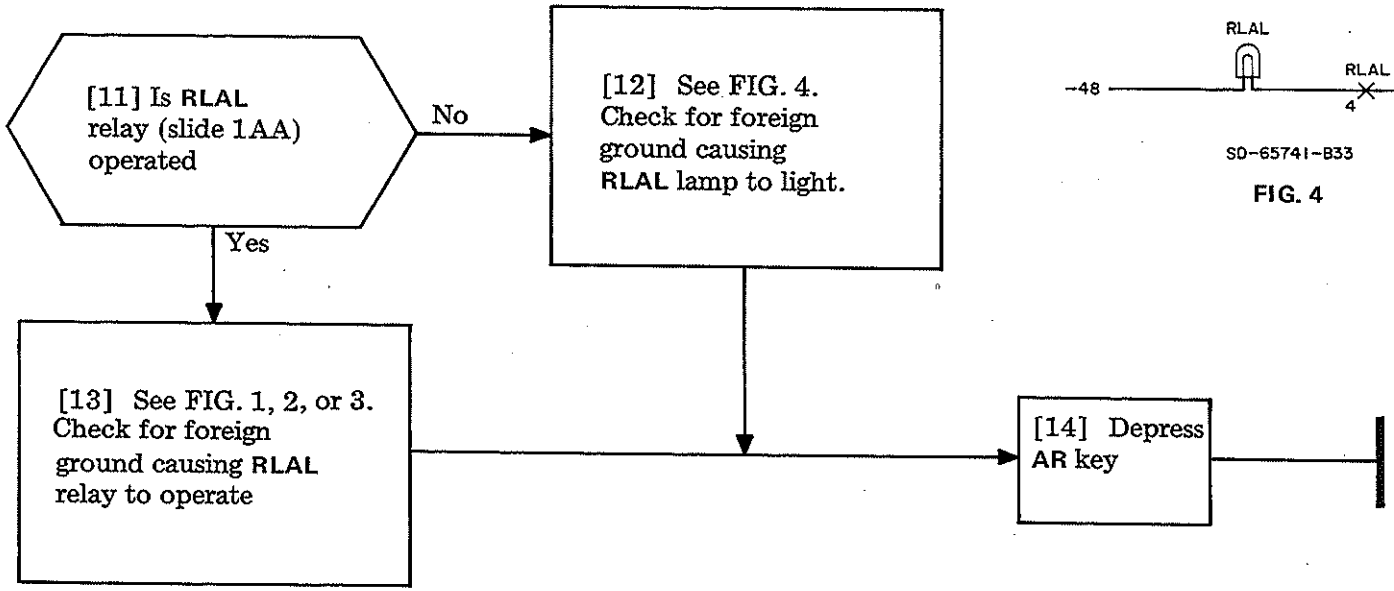

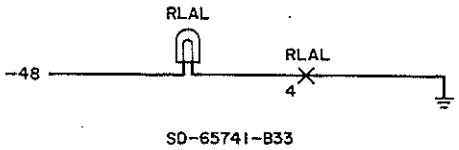

FIG. 4

CLEAR RELEASE ALARM (RLAL) TROUBLE

[1] Connect handset (1014A or equivalent) to test line STA 39 and originate station-to-station or station-to-trunk calls to locate trouble [NOTE 1] [TAD-163]

NOTES

1. TRAL alarm lamp checks marker completion of dial tone connection by operation of TA– or TRA– relays. If one of these relays does not operate, TRAL lamp lights
2. TA– relays are associated with tens group originating call (example: STA 39—TA3 relay). Each tens group should be tested until tens group indicating trouble is located

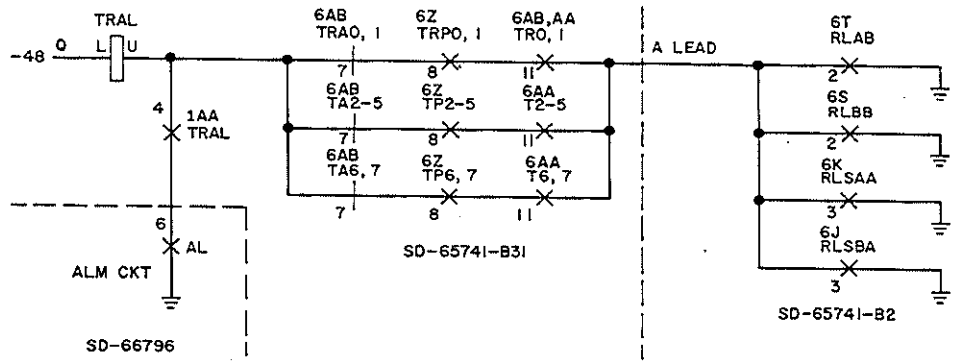

FIG. 1

[2] See FIG. 1. Check for operation of TA3 relay (slide 6AB)

[3] Did TA3 relay operate [NOTE 2]

No → [5] Did TRAL relay operate

Yes → [6] See FIG. 1. Check for foreign ground causing TRAL relay to operate when TRA– or TA– relay is operated (slide 1AA)

Yes → [4] Check circuit of TA– or TRA– relay to determine why relay did not operate [SD-65741, sheet B2]

No → [7] See FIG. 2. Check for foreign ground causing TRAL lamp to light

[8] Depress AR key to release all alarms

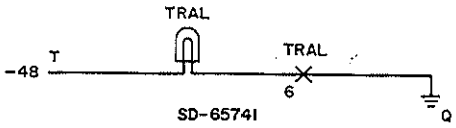

FIG. 2

CLEAR TENS RELEASE ALARM (TRAL) TROUBLE

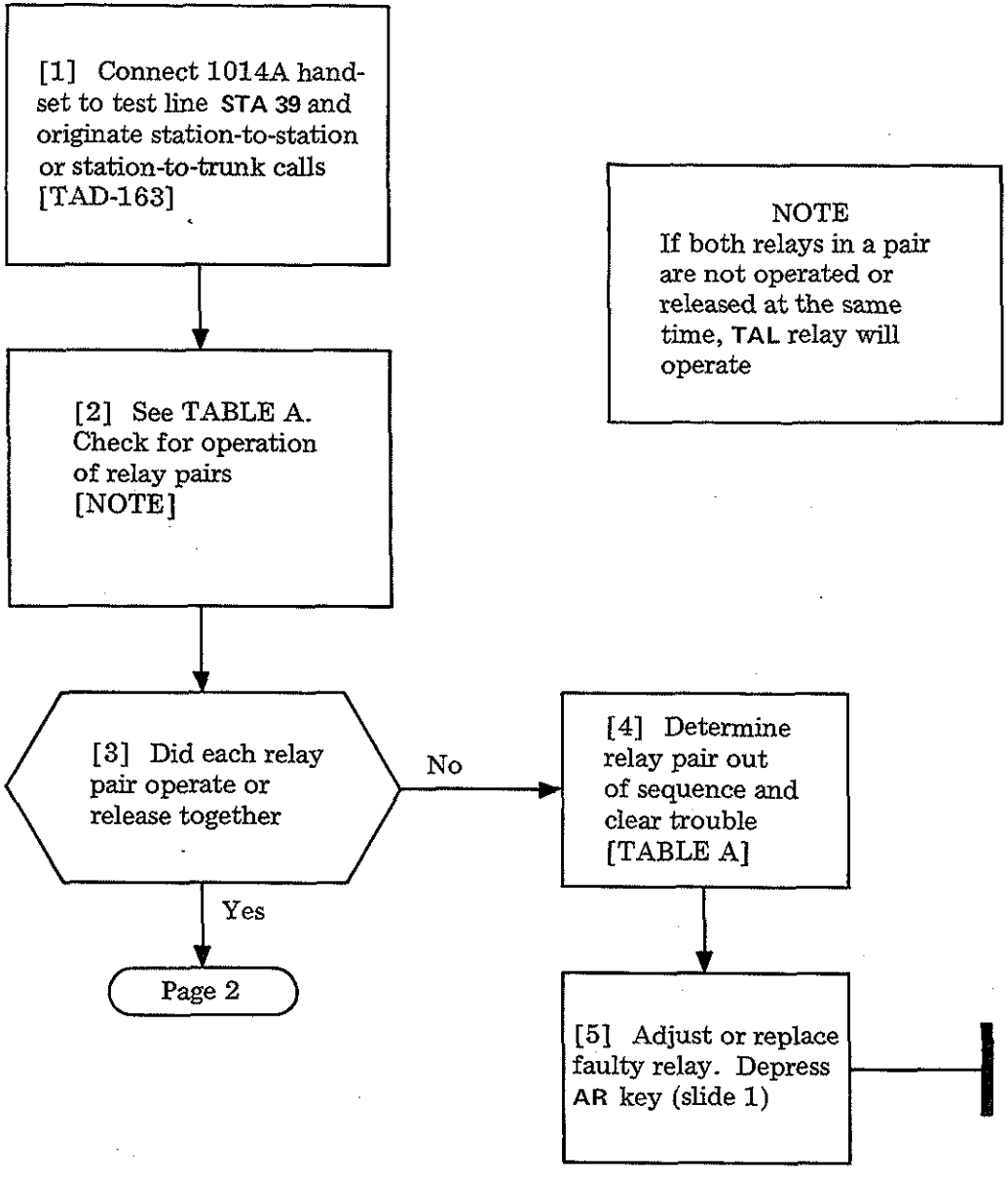

TABLE A

RELAY PAIR	CONTACTS TO INSULATE	SLIDE LOCATION	SD-65741 SHEET NUMBER
TU2/TCS2	8M, B/6M, B	2M	B4
TU3/TCS3	8M, B/6M, B	2M	↑
TU4/TCS4	8M, B/6M, B	3M	
TU5/TCS5	8M, B/6M, B	3M	
TU6/TCS6	8M, B/6M, B	4M	↓
TU7/TCS7	8M, B/6M, B	4M	B4
RCC1/RCD1	8M, B/6M, B	6H	B5A
RCA1/RCB1	6M, B/4M, B	6H	B5A
RCA1/RCC1	8M, B/6M, B	6H	B5A
TACAA/TACBA	8M, B/8M, B	6Y	B4
RCA0/RCB0	6M, B/4M, B	6H	B5A
RCA0/RCC0	8M, B/6M, B	6H	↑
RCD0/RCE0	8M, B/6M, B	6H	
RCC0/RCD0	8M, B/6M, B	6H	↓
RCD1/RCE1	8M, B/6M, B	6H	B5A
ARBA/ARBB	8M, B/6M, B	6AB/6AA	B2
TK0/TKA0	6M, B/6M, B	4Z	B5A
TK9/TKA9	6M, B/6M, B	4Z	B5B
TK8/TKA8	6M, B/6M, B	2L	B5B
TRC1/TRU1	8M, B/8M, B	4Z	B4
TRC0/TRU0	8M, B/8M, B	4Z	↑
TU2/THC2	6M, B/8M, B	2M	
TU3/THC3	6M, B/8M, B	2M	
TU4/THC4	6M, B/8M, B	3M	
TU5/THC5	6M, B/8M, B	3M	
TU6/THC6	6M, B/8M, B	4M	↓
TU7/THC7	6M, B/8M, B	4M	B4
TCK1, 3	11M, B/1M, B	6Z	B3
TCK2, 4	1M, B/11M, B	6Z	B3

CLEAR TENS ALARM (TAL) TROUBLE

[6] See FIG. 1. Check for operation of relays **RP0, 1** (slide 6Z); **TRP0, 1** (6Z); **TP__(2-5)** (6AA); or **TP6, 7** (6AA) at same time relay **RLAA** (6T) or **RLBA** (6S) is operated

[7] Did relay **RP0** or **1**; **TRP0** or **1**; **TP__(2-5)**; or **TP6, 7** operate while relay **RLAA** or **RLBA** was operated

Yes → [8] See FIG. 1. Determine relay circuit causing trouble and clear trouble → [9] Depress AR key

No → [10] See FIG. 2. Check for release of relays **TEA0, 1, 2, 3** (slide 6AB) or **TEB0, 1, 2, 3** (6AA) at same time one of relays **TA2-5; TA6, 7; TRA0, 1;** or **R0, 1** is operated → Page 3

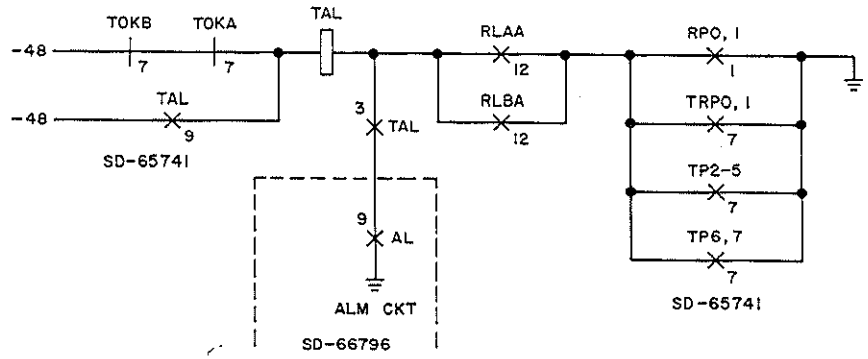

FIG. 1

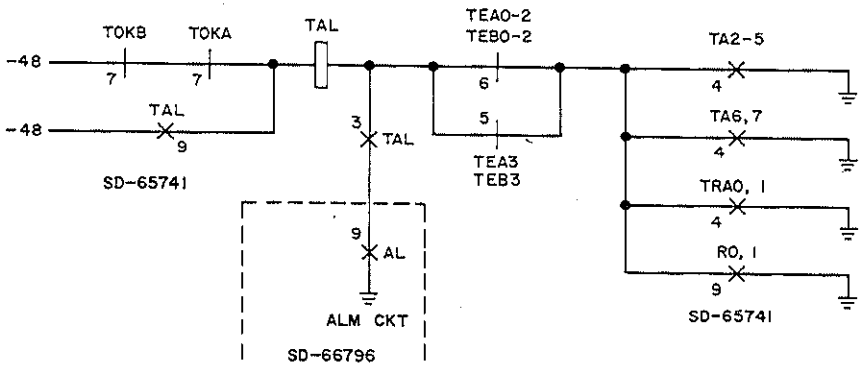

FIG. 2

Issue 1	May 1975
551-100-101	TAP
Page 2 of 4	110

CLEAR TENS ALARM (TAL) TROUBLE

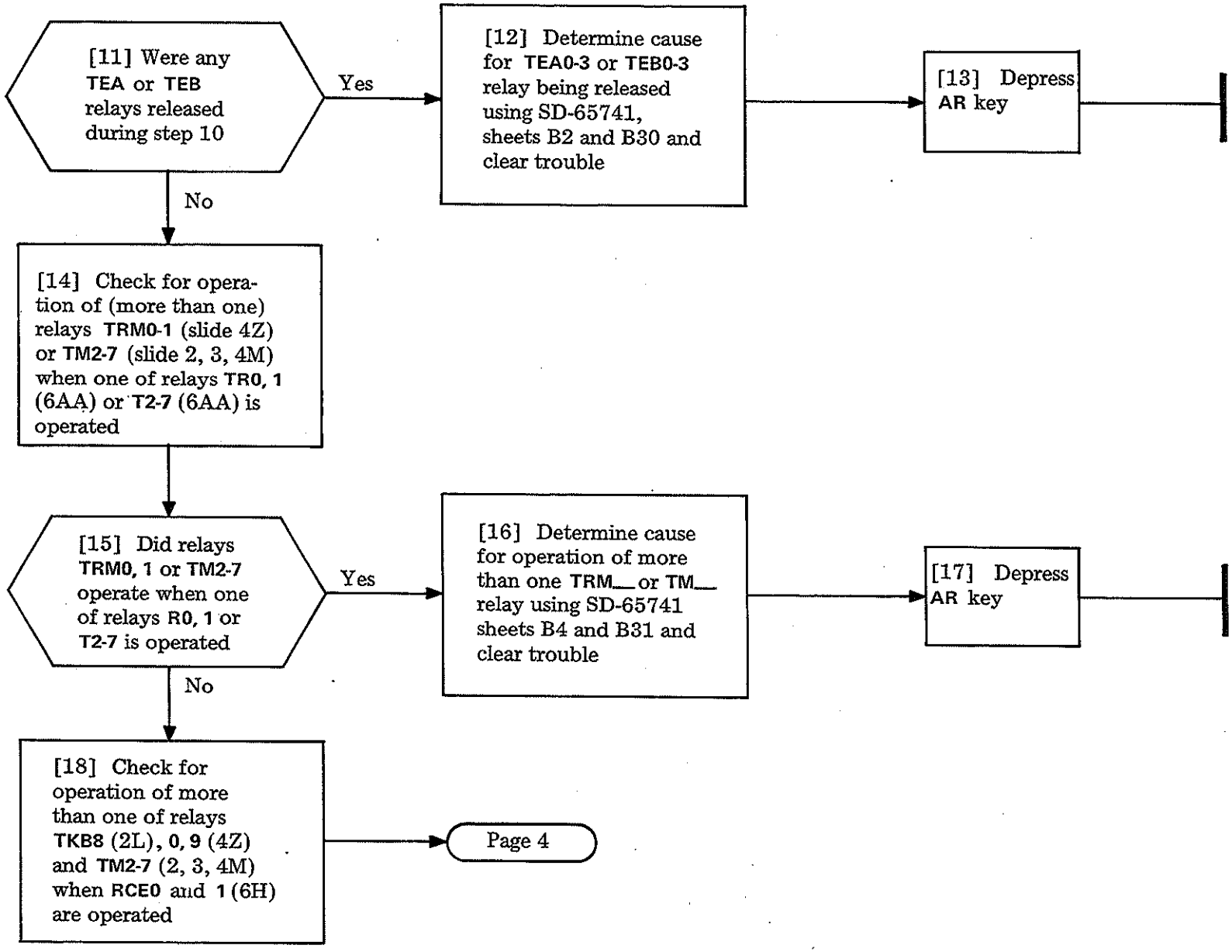

CLEAR TENS ALARM (TAL) TROUBLE

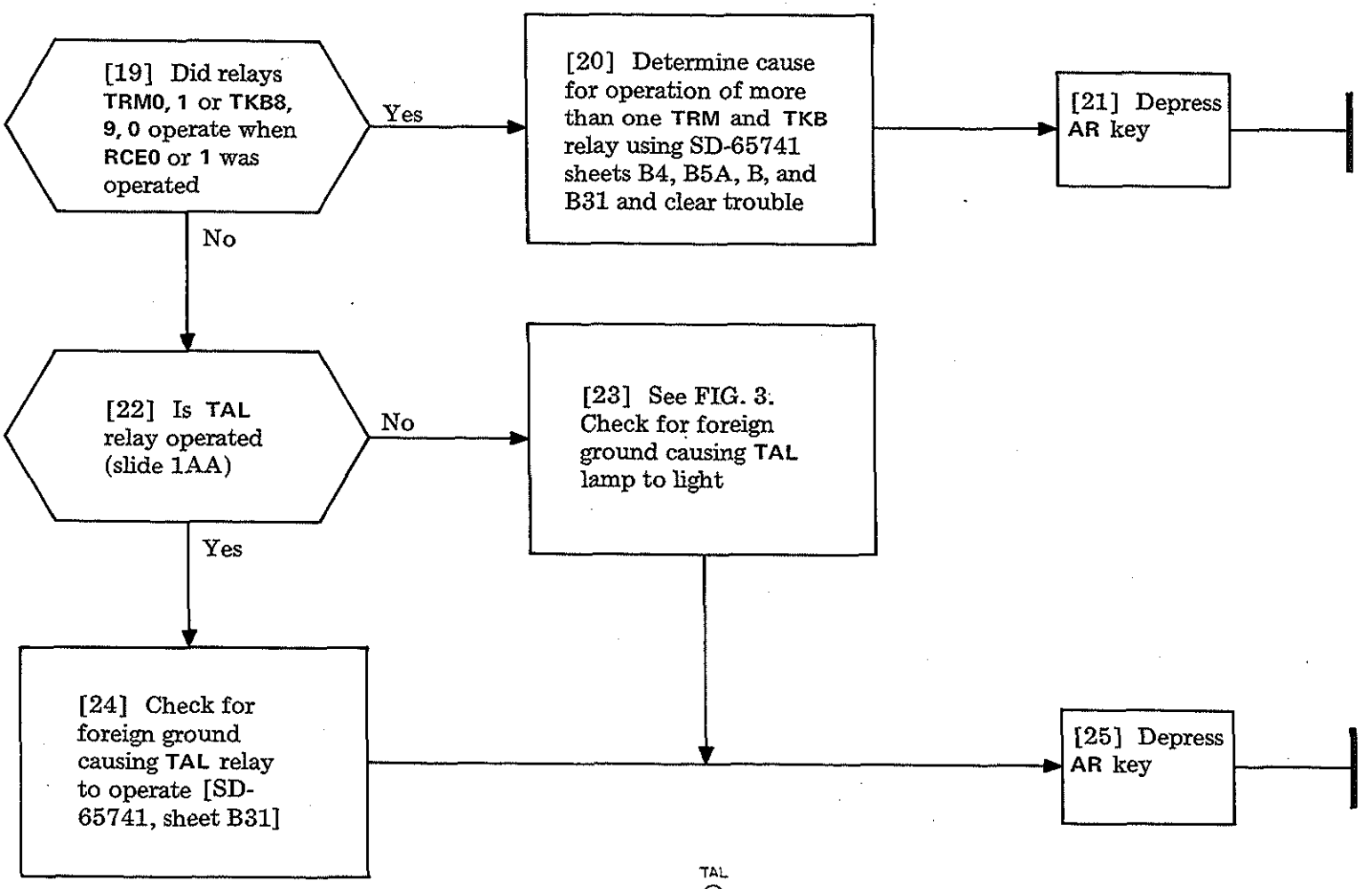

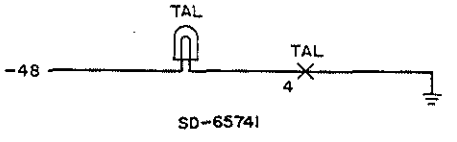

FIG. 3

Issue 1	May 1975
551-100-101	TAP
Page 4 of 4	110

CLEAR TENS ALARM (TAL) TROUBLE

[1] Originate station-to-trunk call using 1014A handset or equivalent. [NOTE]

NOTE
This is trunk (CO or RDTT) class call and will detect trouble on leads TT, TLA, RS, BY, and FF.

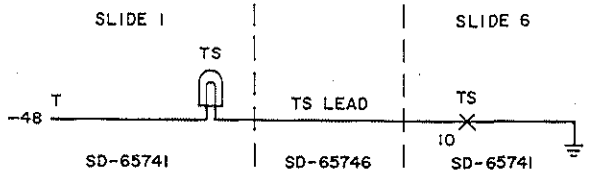

FIG. 1

[2] Check for operation of TS relay (slide 6R)

[3] Did TS relay operate (slide 6R)

No → [4] See FIG. 1. Check for foreign ground on TS lead (lamp circuit)

Yes → [5] Are TSDA and TSDB relays released (slide 6R) in their normal state

No → [6] Check TS relay circuit [SD-65741, sheet B19] for foreign ground causing TS relay to operate

Yes → [7] Check for foreign ground on leads TT, TLA, RS, BY, and FF from central office and ringdown tie trunks causing TS relay to operate [SD-65741, sheet B19 and SD-65752]

[8] Clear trouble condition and depress AR key (slide 1)

Issue 1	May 1975
551-100-101	TAP
Page 1 of 1	111

CLEAR TEST ALARM (TS) TROUBLE

[1] Connect 1014A handset to test line **STA 39** and originate station-to-station calls to check operation of **TOAL** and **TOALA** relays (slide 1AA) [TAD-163]

[2] Are both **TOAL** and **TOALA** relays operated

Yes → [5] See FIG. 2. Check relay pairs **MTA** (slide 6K), **MTB** (6J); **NAA** (6K), **NAB** (6J); **STA** (6K), **STB** (6J); and **TOLA** (6K), **TOLB** (6J) for operation or release together [NOTE]

Page 2

No → [3] See FIG. 1. Check for foreign ground causing **TOAL** lamp to light (slide 1)

[4] Depress **AR** key (slide 1) to release alarm

NOTE
If both relays in a pair are not operated or released at the same time, **TOAL** relay will operate

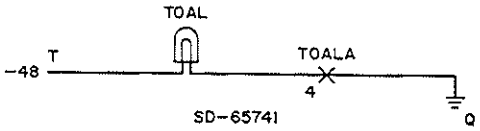

FIG. 1

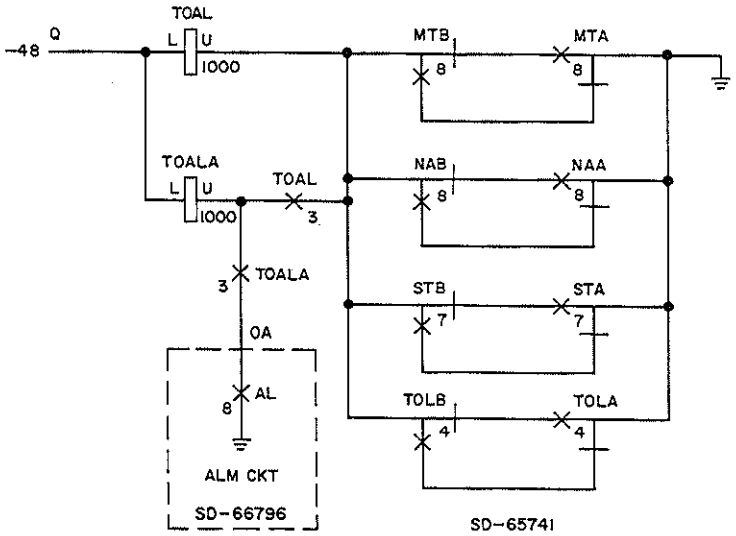

FIG. 2

CLEAR TIME-OUT ALARM (TOAL) TROUBLE

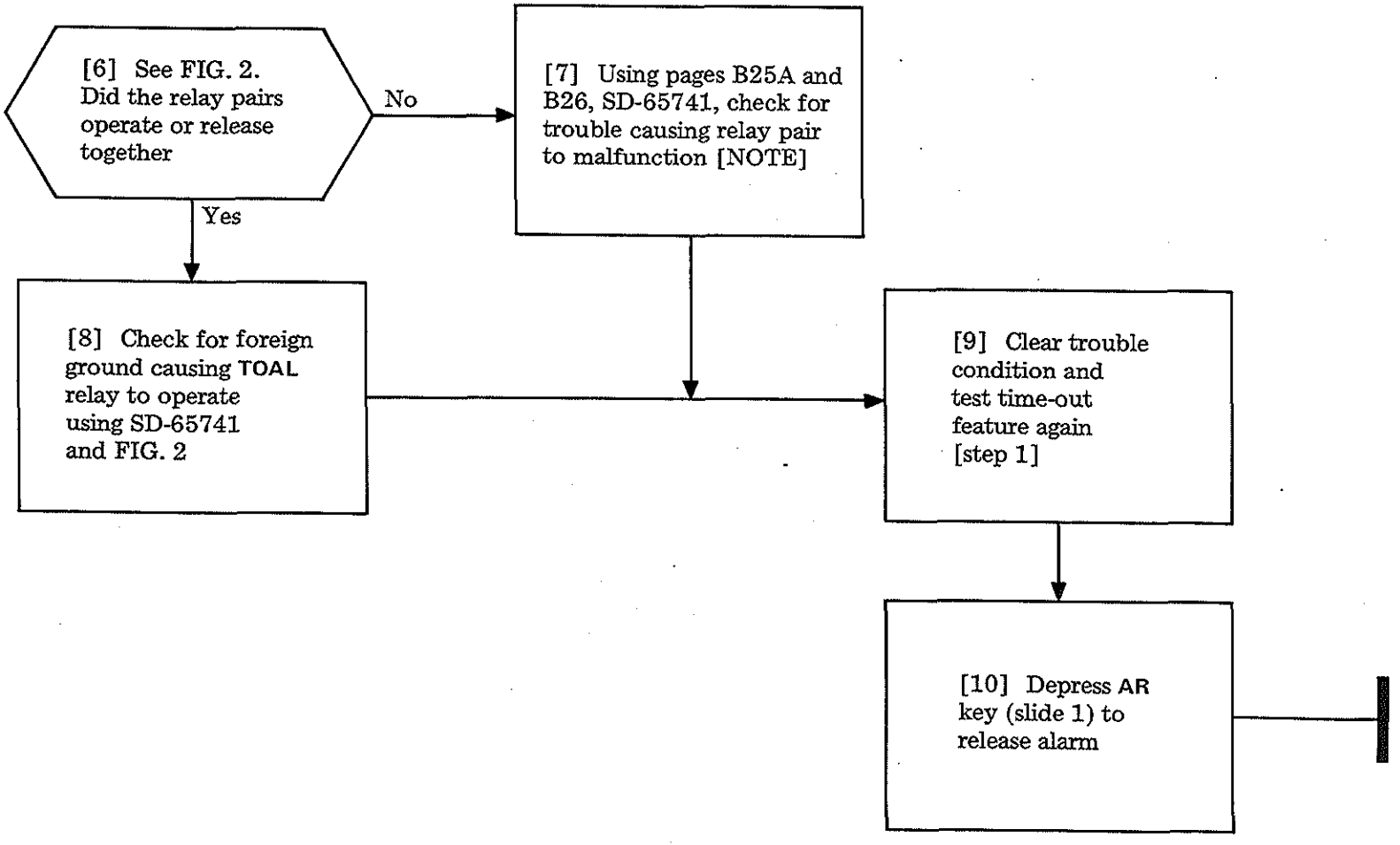

CLEAR TIME-OUT ALARM (TOAL) TROUBLE

[1] Connect 1014A handset to test line STA 39 and originate station-to-station calls

[2] See FIG. 1. Check for operation of TRA and TRB relays (slide 6K and 6J)

[3] Did TRA and TRB relays operate

Yes

[4] See FIG. 1. Check for operation of RLSAA and RLSBA relays (slide 6K and 6J)

[5] Did either RLSAA or RLSBA relay operate

Yes

No

No

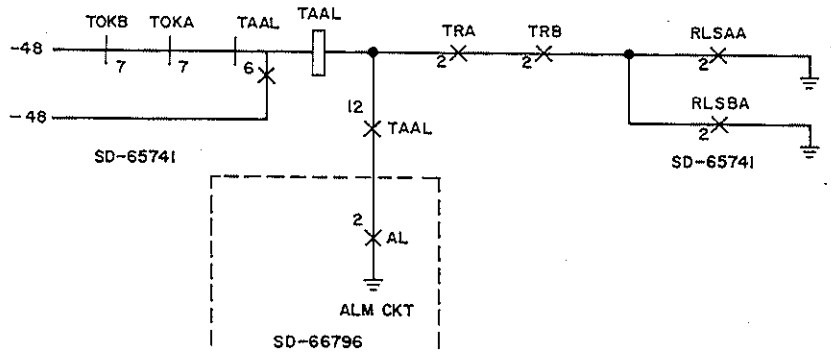

FIG. 1

[7] Is TAAL relay (slide 1AA) operated

Yes

No

[8] See FIG. 1. Clear foreign ground causing TAAL relay to operate

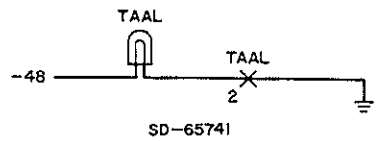

FIG. 2

[6] Clear trouble causing relays TRA, B and RLSAA or RLSBA to operate using SD-65741-01, sheet B25A.

[9] See FIG. 2. Clear foreign ground causing TAAL lamp to light

[10] Depress AR key

Issue 1	May 1975
551-100-101	TAP
Page 1 of 1	113

CLEAR TROUBLE ADVANCE ALARM (TAAL) TROUBLE

[1] Connect test handset to test line STA 39 and originate station-to-station calls [NOTE 1]

[2] See TABLE A. Check for operation of relay pairs [NOTE 2]

[3] Did each relay pair operate or release together

No → [4] Determine relay pair out of sequence and locate and clear trouble [TAD-163] → [5] Depress AR key

Yes → Page 2

NOTES

1. Refer to TAD-163 for general procedure of isolating and clearing troubles indicated by marker alarm lamps
2. If both relays in a pair are not operated or released at the same time, UAL relay will operate

TABLE A

RELAY PAIR	CONTACTS TO INSULATE	SLIDE NUMBER	SD-65741 SHEET NUMBER
UEA/UEB	4M, B/4M, B	6V/U	B8
JREA/JREB	8M, B/8M, B	6Y/X	B13
ULA/ULB	8M, B/8M, B	6V/U	B8
RUCA/RUCB	8M, B/8M, B	6V/U	B8
SEAA/SEBA	9M, B/9M, B	6V/U	B12
HCA/HCB	8M, B/8M, B	6Y	B9
TRKA/TRKAA	6M, B/6M, B	6Y	B14
TRKB/TRKBA	6M, B/6M, B	6X	B14
TRKA/TRKB	8M, B/8M, B	6Y/X	B14
WU/WUA	4M, B/12M, B	6L/M	B12, 29

CLEAR UNITS ALARM (UAL) TROUBLE

[6] Check that relays **TRCA, AA** (slide 6Y) and **TRCB, BA** (6X) all operate together [FIG. 1]

[7] Did relays **TRCA, AA** and **TRCB, BA** all operate together

No → [8] See FIG. 1. Determine relay causing trouble and clear trouble in circuit

Yes → [9] Check operation of **JR– (0-5)** relays (slide 6X)

[10] Did more than one **JR–** relay operate at same time

Yes → [11] Determine **JR–** relay causing the trouble and clear trouble using SD-65741, sheets B13 and B29

No → Page 3

[12] Depress **AR** key

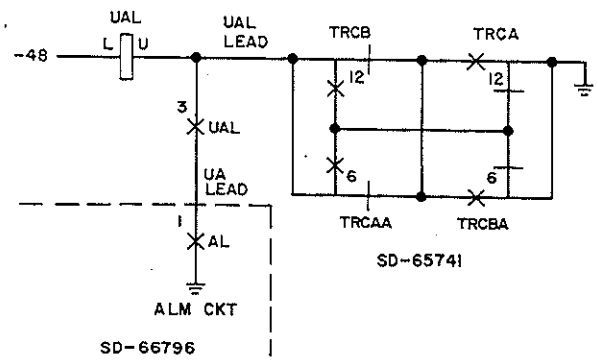

FIG. 1

CLEAR UNITS ALARM (UAL) TROUBLE

[13] Check unit sequence control WU and WUA relays (slide 6L, M) [NOTE 3]

NOTE 3
WU and WUA relays will be operated or released as a pair if unit sequence control circuit is functioning properly

[14] Did WU and WUA relays both operate and release together

No → [15] See FIG. 2. Determine relay (WU or WUA) causing trouble and locate trouble

Yes ↓

[16] Is UAL relay operated (slide 1AA)

No → [17] See FIG. 3. Check for foreign ground causing UAL lamp to light

Yes ↓

[18] Check for foreign ground causing UAL relay to operate [FIG. 2]

[19] Depress AR key

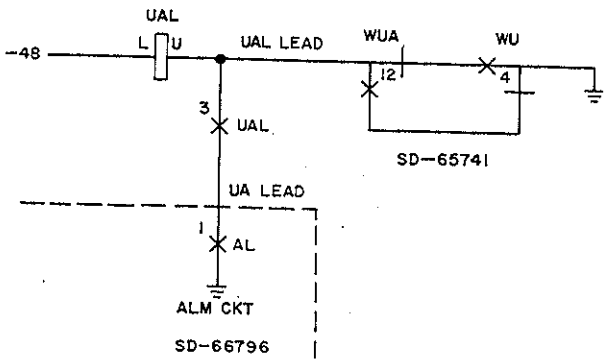

FIG. 2

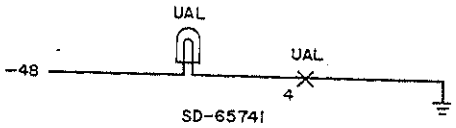

FIG. 3

CLEAR UNITS ALARM (UAL) TROUBLE

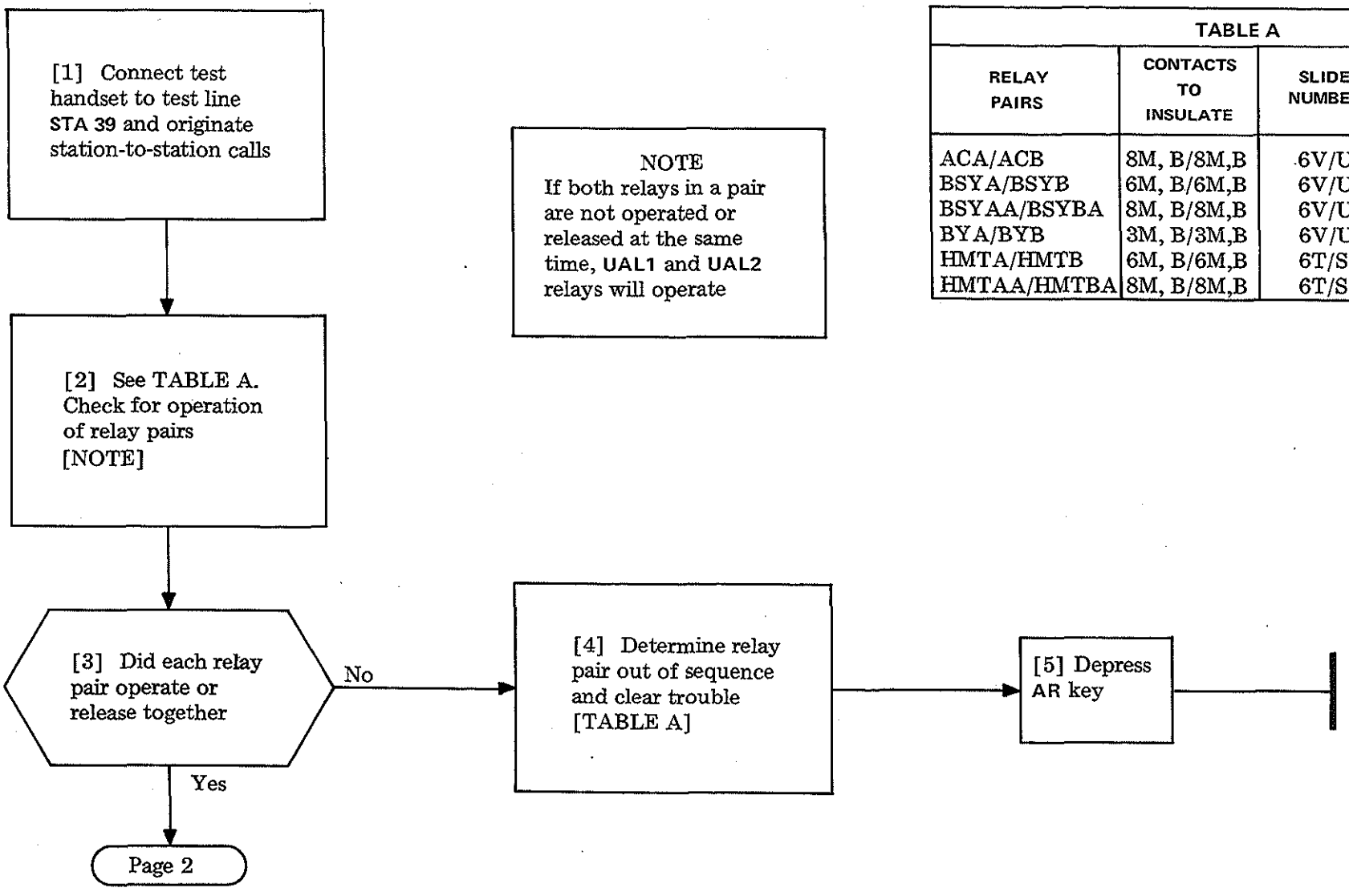

TABLE A

RELAY PAIRS	CONTACTS TO INSULATE	SLIDE NUMBER	SD-65741 SHEET NUMBER
ACA/ACB	8M, B/8M,B	6V/U	B8
BSYA/BSYB	6M, B/6M,B	6V/U	B12
BSYAA/BSYBA	8M, B/8M,B	6V/U	B12
BYA/BYB	3M, B/3M,B	6V/U	B12
HMTA/HMTB	6M, B/6M,B	6T/S	B15
HMTAA/HMTBA	8M, B/8M,B	6T/S	B15

CLEAR UNITS ALARM (UAL1) TROUBLE

[6] Did unit sequence **WU** and **ZU** relays (slide 6L, M) operate or release together [FIG. 1]

No → [7] Check operate path of **WU** and **ZU** relays to clear trouble using SD-65741, sheet B12

Yes ↓

[8] Did **TACA, TACB, TACAA,** and **TACBA** relays (slide 6Y) all operate together [FIG. 1]

No → [9] Check operate path of **TACA, TACB, TACAA,** and **TACBA** relays to clear trouble using SD-65741

Yes ↓

[10] Did **STB** and **SAB** relays (slide 6J) operate together

No → [11] Check operate path of **STB** and **SAB** relays to clear trouble [FIG. 2]

Yes ↓

Page 3

[12] Depress **AR** key

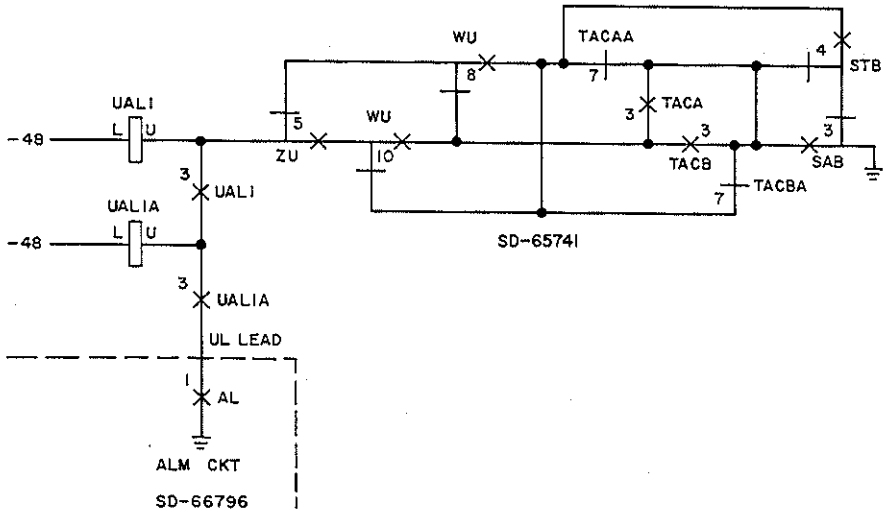

FIG. 1

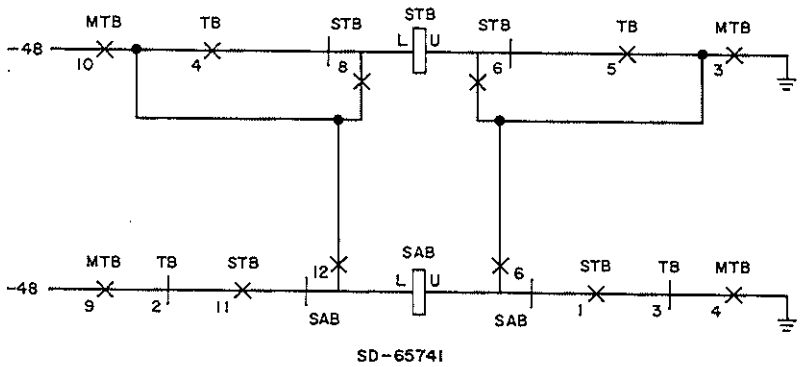

FIG. 2

CLEAR UNITS ALARM (UAL 1) TROUBLE

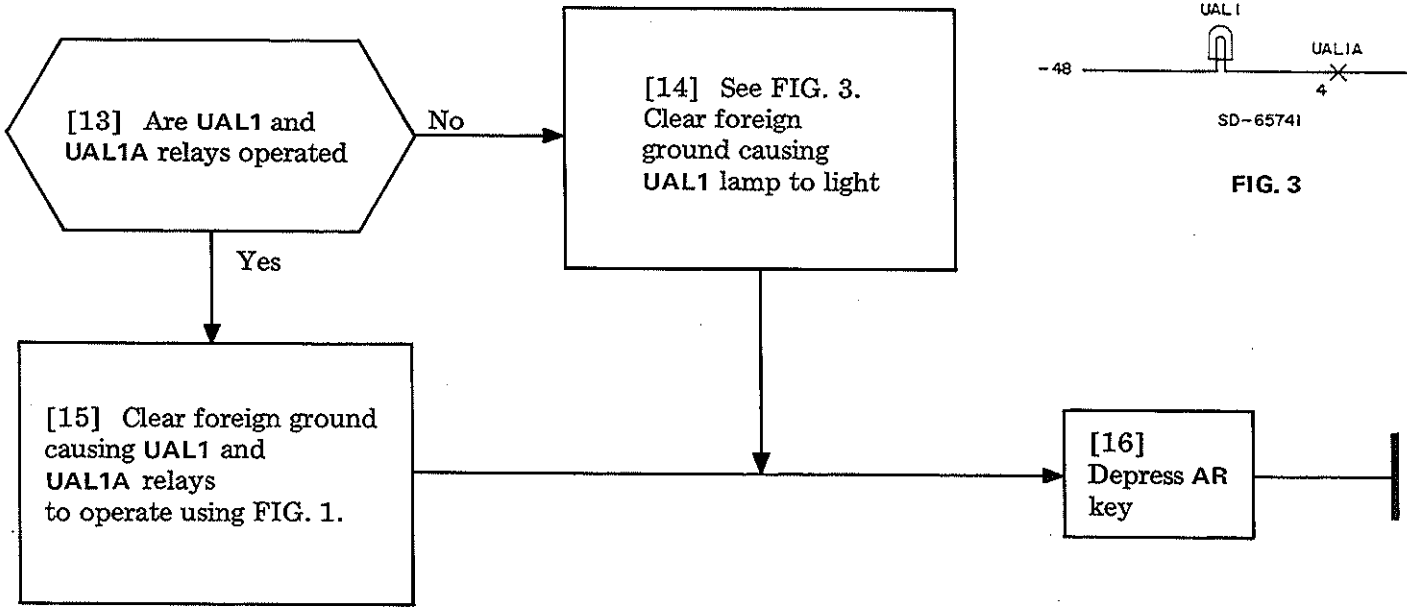

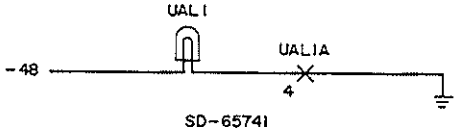

FIG. 3

CLEAR UNITS ALARM (UAL1) TROUBLE

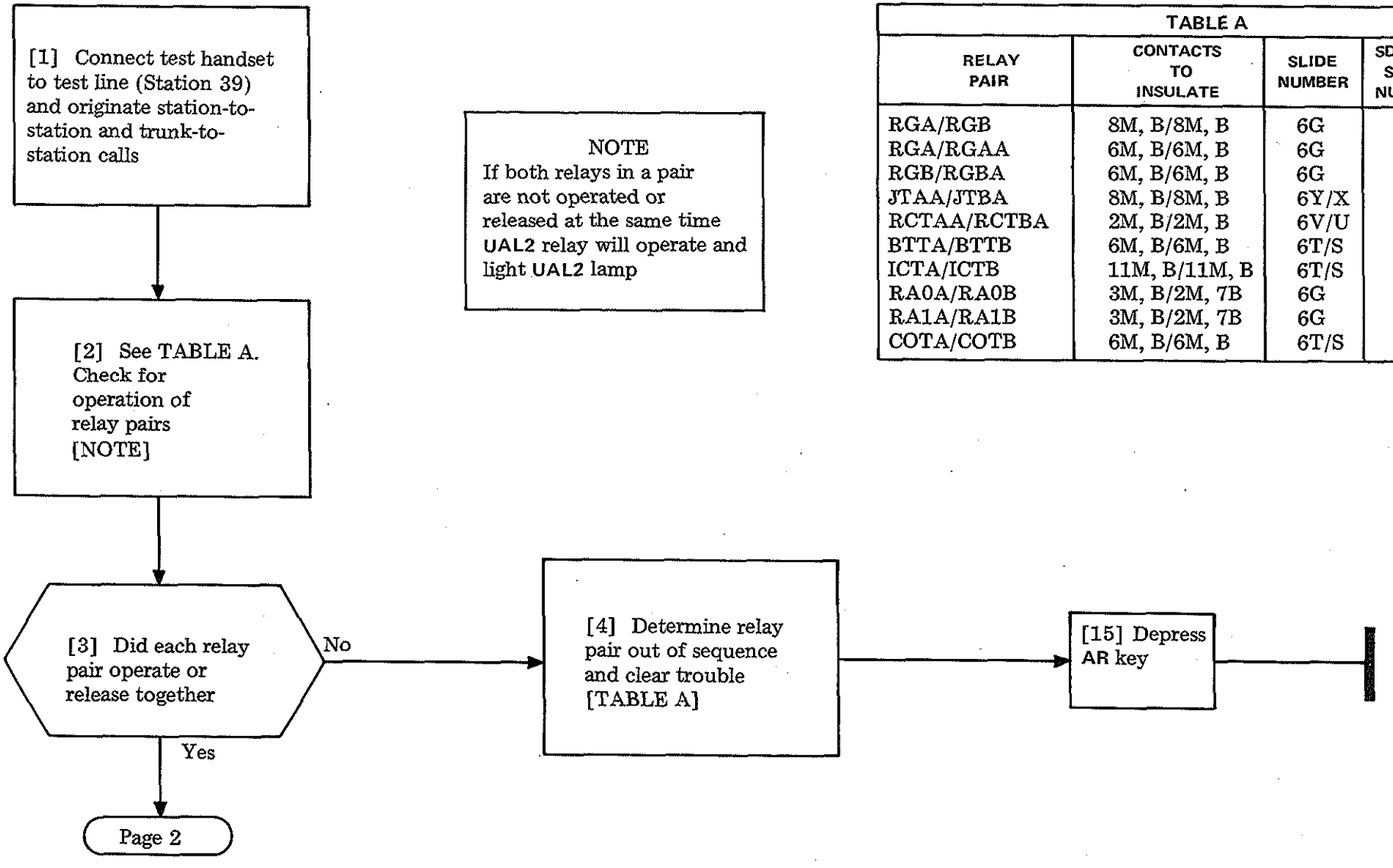

TABLE A

RELAY PAIR	CONTACTS TO INSULATE	SLIDE NUMBER	SD-65741 SHEET NUMBER
RGA/RGB	8M, B/8M, B	6G	B17
RGA/RGAA	6M, B/6M, B	6G	B17
RGB/RGBA	6M, B/6M, B	6G	B17
JTAA/JTBA	8M, B/8M, B	6Y/X	B14
RCTAA/RCTBA	2M, B/2M, B	6V/U	B14
BTTA/BTTB	6M, B/6M, B	6T/S	B16
ICTA/ICTB	11M, B/11M, B	6T/S	B16
RA0A/RA0B	3M, B/2M, 7B	6G	B17
RA1A/RA1B	3M, B/2M, 7B	6G	B17
COTA/COTB	6M, B/6M, B	6T/S	B15

CLEAR UNITS ALARM (UAL2) TROUBLE

[6] Check select magnet register SMRA, B and SMRAA, BA relays (slide 6T, S) to determine if the pairs operate together

[7] Did SMRA, B and SMRAA, BA relays operate together

No → [8] See FIG. 1. Determine select magnet register relay causing trouble and clear trouble

Yes ↓

[9] Is UAL2 relay operated (slide 1AA)

No → [10] See FIG. 2 Clear foreign ground causing UAL2 lamp to light

Yes ↓

[11] Clear foreign ground causing UAL2 relay to operate using FIG. 1

[12] Depress AR key

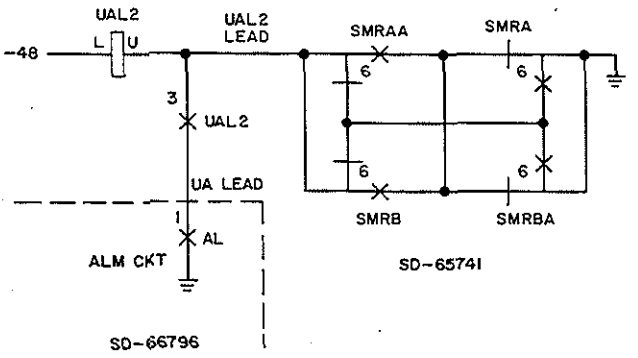

FIG. 1

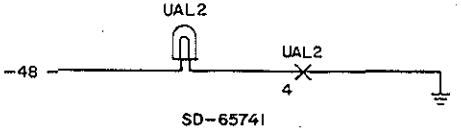

FIG. 2

CLEAR UNITS ALARM (UAL2) TROUBLE

[1] Connect 1014A handset to test line **STA 39** operating **TALK** key, then originate camp-on call from console to **STA 39**

[2] Does **XC** relay (slide 6P) operate while making attempt to camp on

No → [4] Is **XCAL** relay (slide 1AB) operated

Yes → [3] See NOTE. Check **LT–(2-9)** relays (slide 6P) during camp-on call termination [step 1] using SD-65741, sheet B38, 39 to locate trouble [FIG. 3]

[4] No → [6] Check for foreign ground causing **XCAL** lamp to light [FIG. 2]

[4] Yes → [5] Check for foreign ground causing **XCAL** relay to operate [FIG. 1]

[5] → [7]

[6] → [7]

[7] Clear trouble (dirty or shorted contact, loose or broken wire, wire clipping, etc)

[7] → [8]

[8] Depress **AR** key (slide 1) to release alarms

NOTE

XC relay is marginal relay which will operate only if two or more **LT–(2-9)** relays operate during link testing sequence for a camp-on call

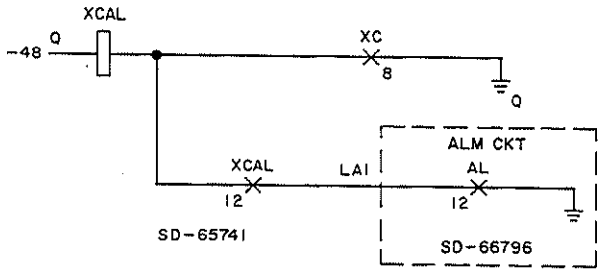

FIG. 1

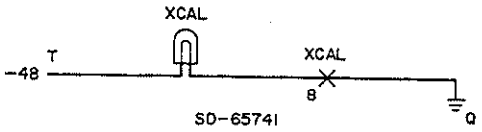

FIG. 2

CLEAR CROSS CHECK ALARM (XCAL) TROUBLE

Issue 1	May 1975
551-100-101	TAP
PAGE 1 of 2	117

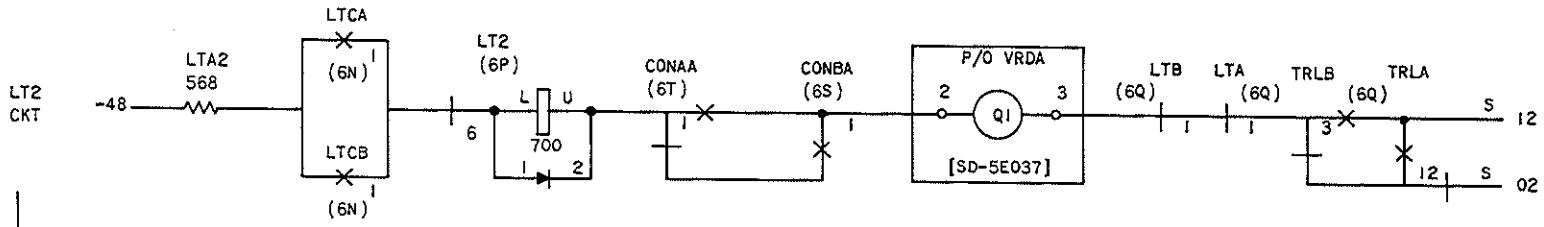

LT CKT	RESISTOR DESIG.	LTC(A,B) CONTACTS	LT RELAY	CON (AA, BA) CONTACTS	VRD-CONNECTIONS	LT(A, B) CONTACT	TRL(A, B) CONTACTS
LT3	LTA3	2	LT3	AA 2, BA 2	4 VRDA Q2 5	2	B 4, A11
LT4	LTA4	3	LT4	AA 3, BA 3	6 VRDA Q3 7	3	B 6, A10
LT5	LTA5	4	LT5	AA 4, BA 4	8 VRDA Q4 9	4	B 7 A9
LT6	LTA6	5	LT6	AA 9 BA 9	2 VRDB Q1 3	9	A 3, B12
LT7	LTA7	6	LT7	AA10, BA10	4 VRDB Q2 5	10	A 4, B11
LT8	LTA8	7	LT8	AA11, BA11	6 VRDB Q3 7	11	A 6, B10

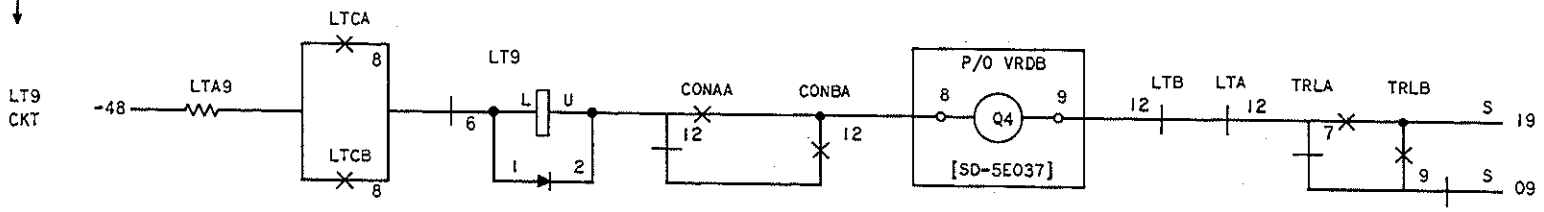

FIG. 3

CLEAR CROSS CHECK ALARM (XCAL) TROUBLE

[1] Is ARB (CSL) lamp permanently or intermittently lighted [FIG. 1]

Intermittent [NOTE 1]

Permanent

[2] Check SR and RT relays in each register (slide 6) to see if operated

[3] Is either of these relays (RT or SR) permanently operated

No

Yes

Page 2

[4] Test each register by placing call to test line (STA 39). Use 1014A handset with 310 plug and plug into TST jack of register under test

[5] Were test calls completed with no trouble indicated

Yes

No

TAP-146

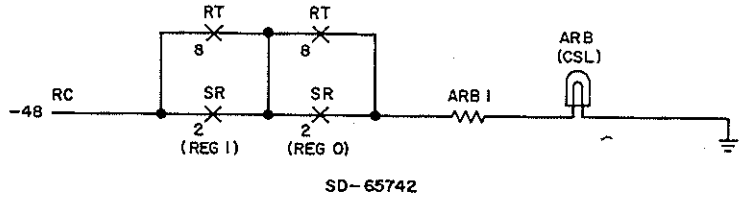

FIG. 1

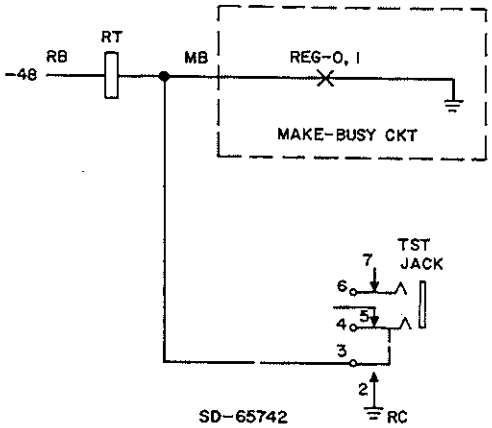

FIG. 2

NOTE 1
Heavy traffic in PBX can cause intermittent ARB lamp

CLEAR ALL REGISTERS BUSY (ARB) ALARM TROUBLE

[6] Which relay (RT or SR) is operated (slide 6A, E) [NOTE 2]

RT → [7] Be sure that REG MB keys (slide 2AB) or MB test plug (slide 6B, E) are not in use. These will cause RT relay to operate [FIG. 2]

[8] Is RT relay still operated

No → [10] Test each register by placing call to test line (STA 39). Place the test call from a station close by or from the terminal

Yes → [9] Check for foreign ground condition causing RT relay to operate [FIG. 2] → [10]

SR → [11] Remove L relay by pulling from socket on register [NOTE 3]

NOTES

2. Test each register separately so trouble can be located
3. Register L relay is located in slide 6A, E (far right in tube socket)

[12] Did SR relay release

Yes → [13] Insert new L relay → [14] Did SR relay operate

Yes → [15] See NOTE 1. Locate foreign ground causing SR relay to operate. See FIG. 3

No → [16] Replace L relay removed in step 11 → [17] Check for foreign ground causing SR relay to operate. See FIG. 3 → [18] Test each register by placing call to test line (STA 39). Place the test call from a station close by or from the terminal

No → [18]

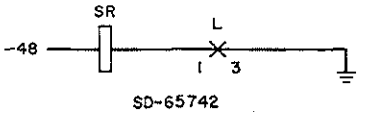

SD-65742

FIG. 3

CLEAR ALL REGISTERS BUSY (ARB) ALARM TROUBLE

SUMMARY

From the attendant console, make test call(s) using the same attendant trunk and station involved with the trouble. Dial or direct station select (DSS) the station. If a normal result fails to occur during progress of the call, locate the fault using the TAP reference given.

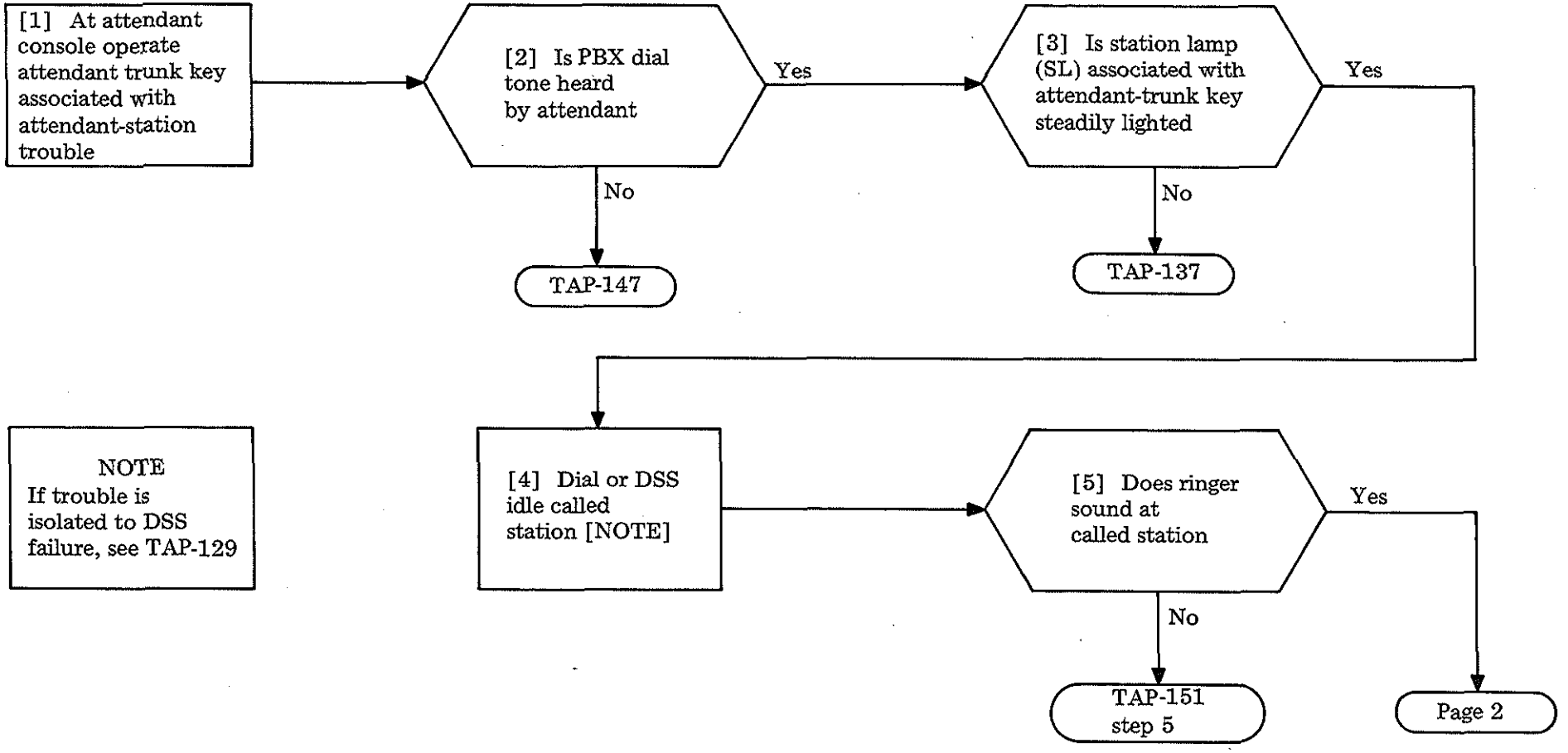

NOTE
If trouble is isolated to DSS failure, see TAP-129

Issue 1	May 1975
551-100-101	TAP
Page 1 of 2	119

CLEAR ATTENDANT TRUNK TO STATION CALL TROUBLE (SD-65753)

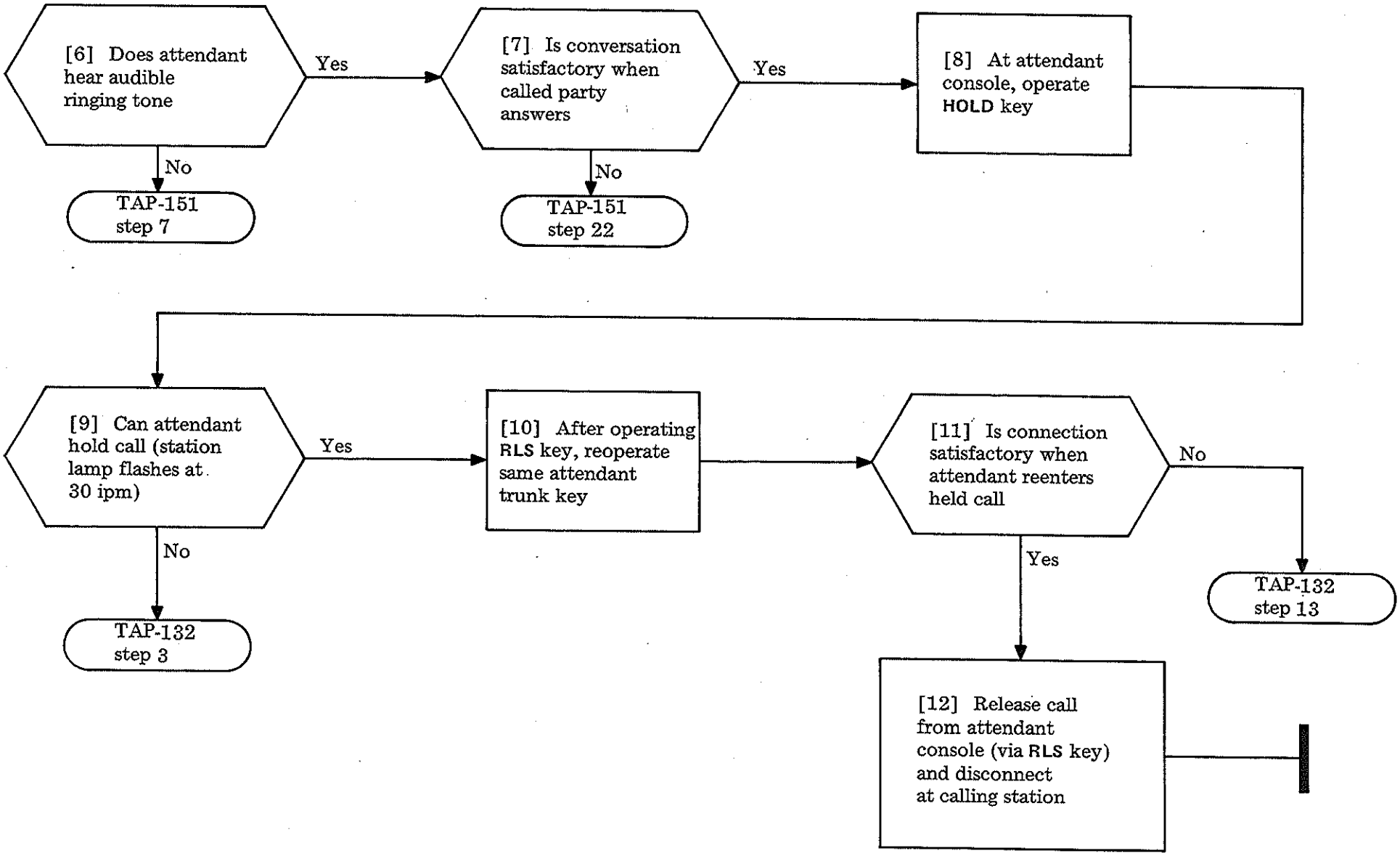

CLEAR ATTENDANT TRUNK TO STATION CALL TROUBLE (SD-65753)

SUMMARY

Arrange for an incoming call to be placed via the central office (CO) trunk in trouble. Answer the call at the attendant console. Extend the call via dialing or direct station selection (DSS) to the idle or busy station involved with the trouble. If a normal result fails to occur during the progress of the call, locate the fault using the TAP or other reference given. This procedure assumes trouble has been tested (by test desk, etc.) and proved to be at the local PBX.

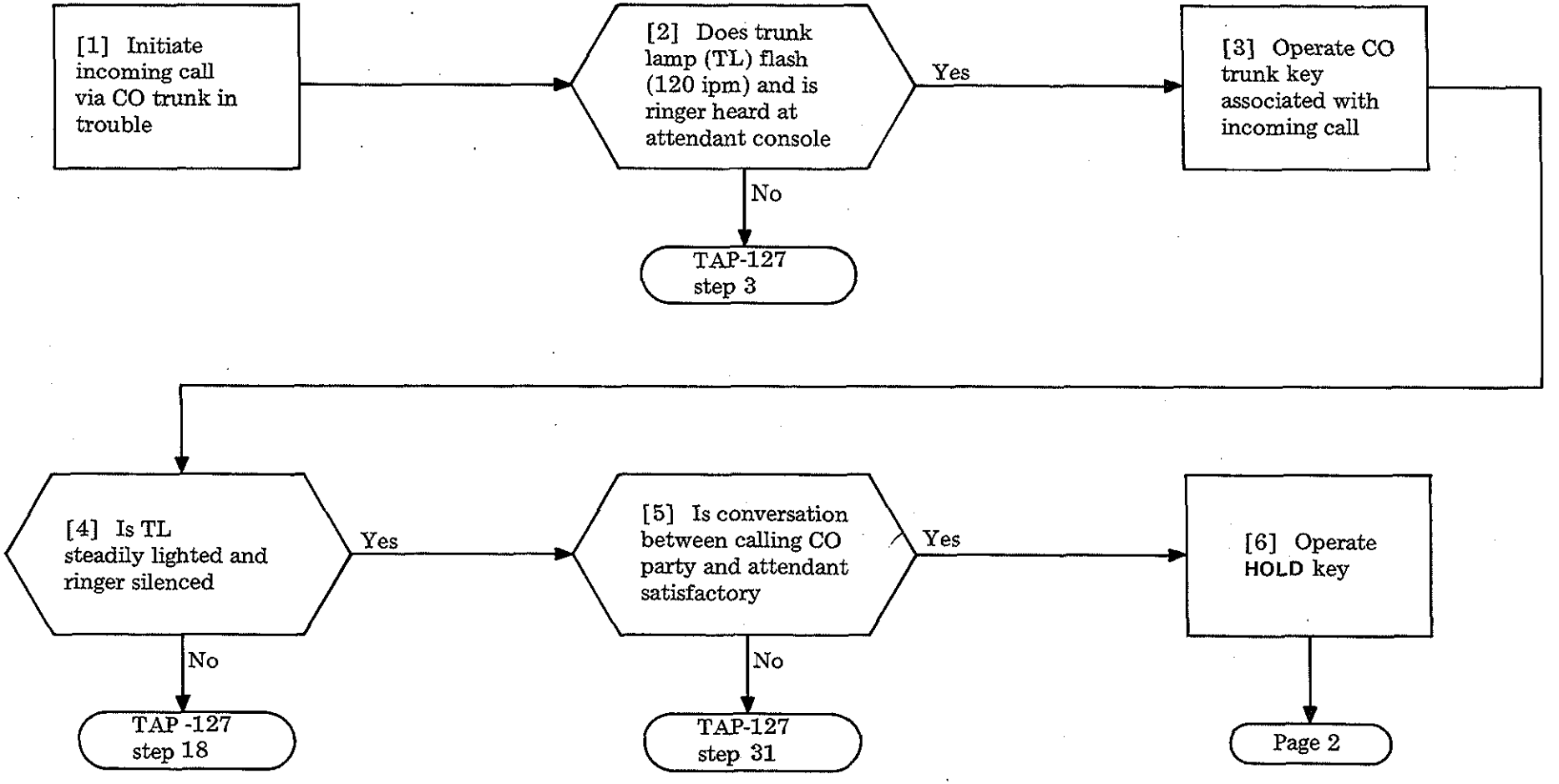

Issue 1	May 1975
551-100-101	TAP
PAGE 1 of 3	120

CLEAR CENTRAL OFFICE TRUNK TO STATION CALL TROUBLE (SD-65752)

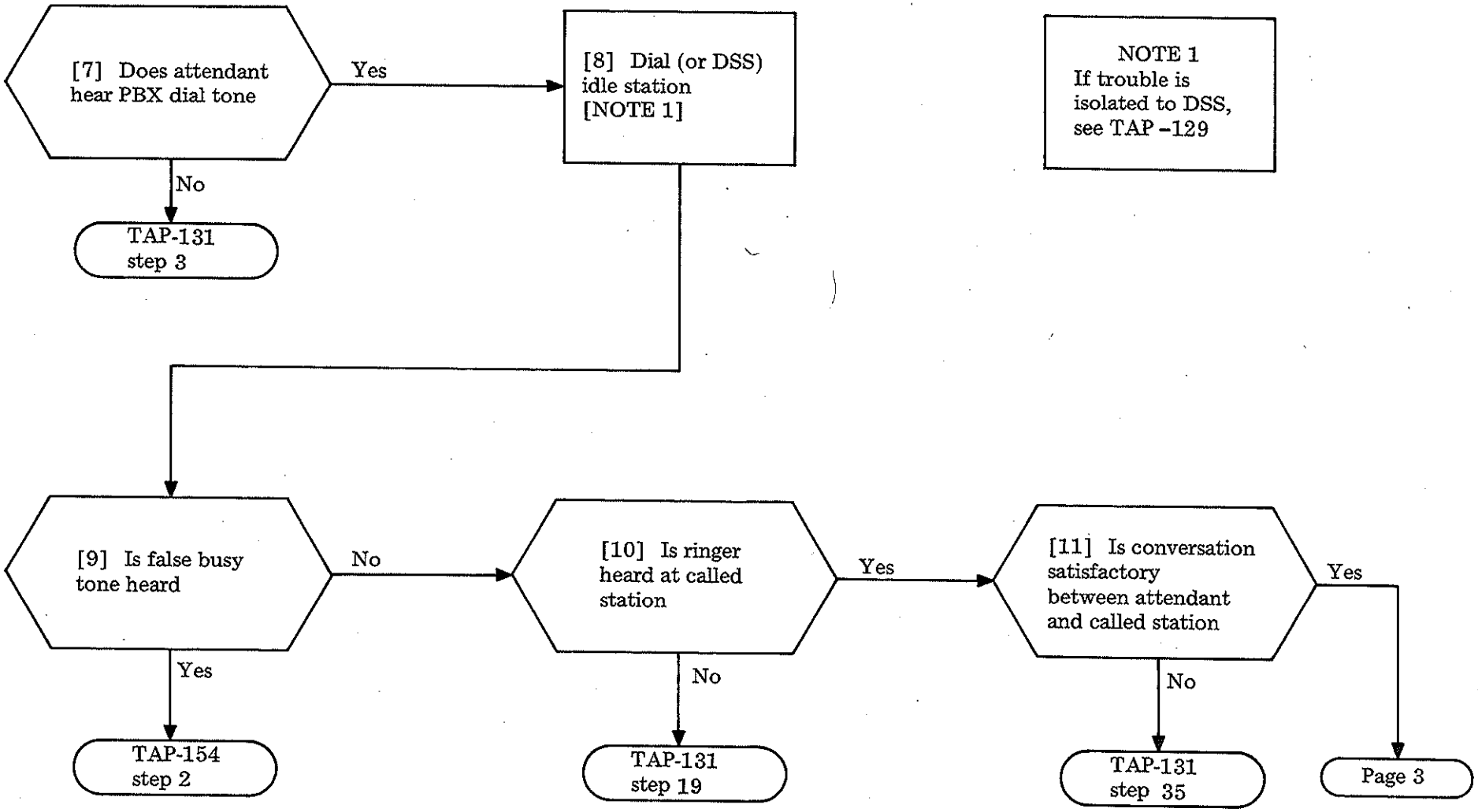

CLEAR CENTRAL OFFICE TRUNK TO STATION CALL TROUBLE (SD-65752)

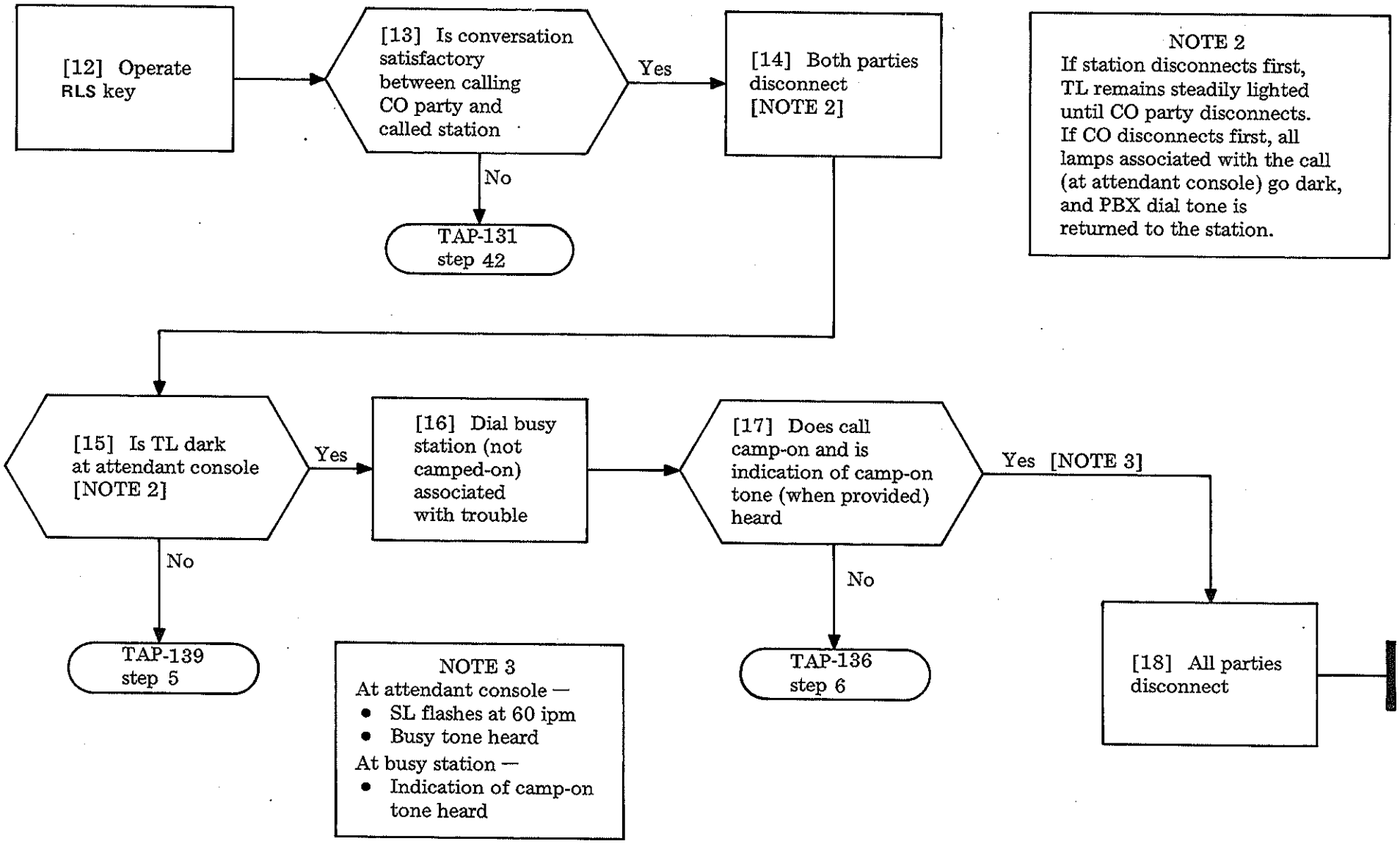

CLEAR CENTRAL OFFICE TRUNK TO STATION CALL TROUBLE (SD-65752)

SUMMARY

Arrange for an incoming ringdown tie trunk (RDTT) call to be placed via the RDTT in trouble. Answer the call at the attendant console and extend the call via dial or direct station selection (DSS) to an idle station. If a certain station is involved with the trouble, use that station for the test call(s). If a normal result fails to occur during the progress of the call, locate the fault using the TAP reference given. This procedure assumes trouble has been tested (by test desk, etc) and proved to be at the local PBX.

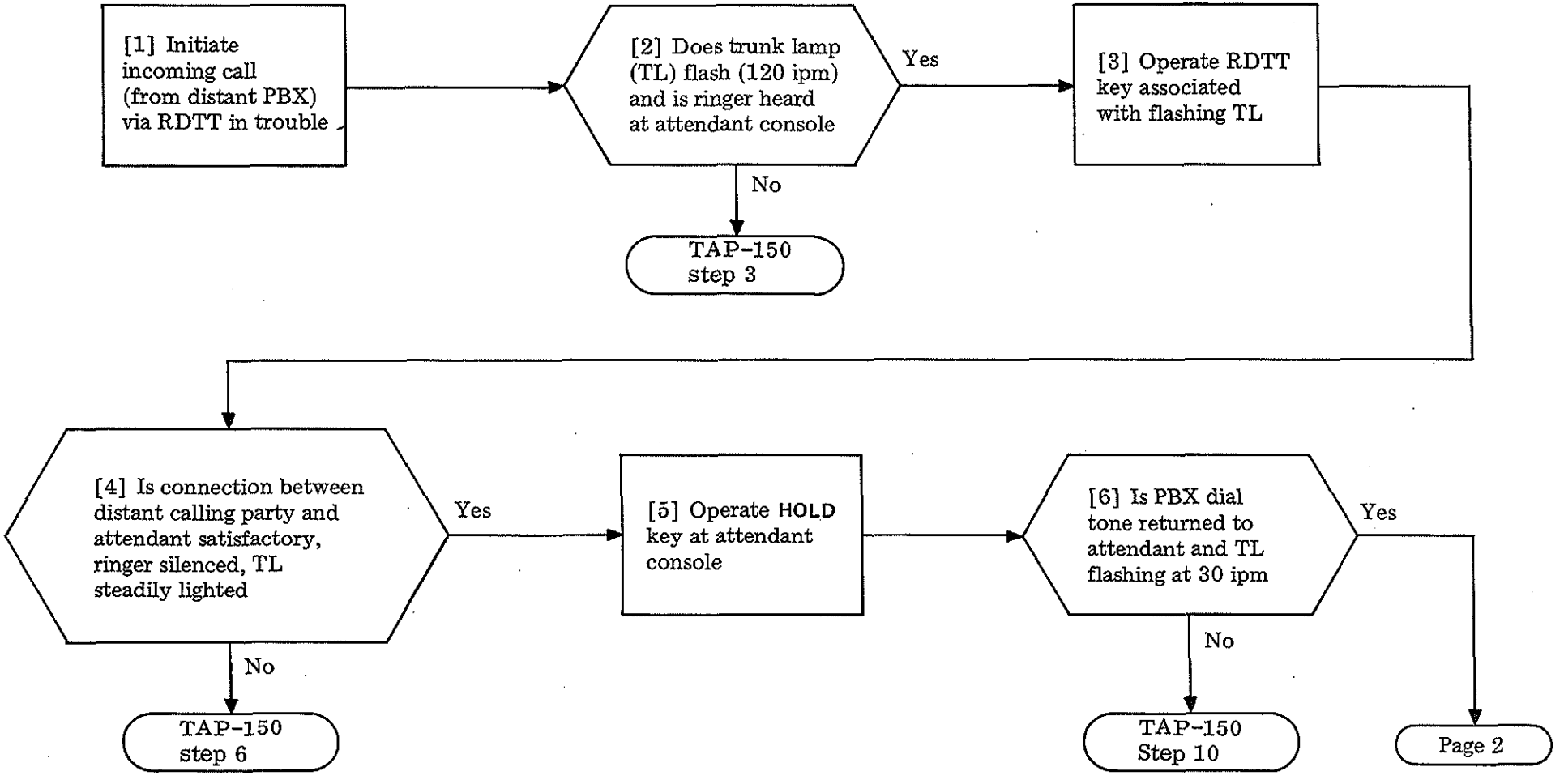

CLEAR INCOMING RINGDOWN TIE TRUNK TO STATION CALL TROUBLE (SD-65756)

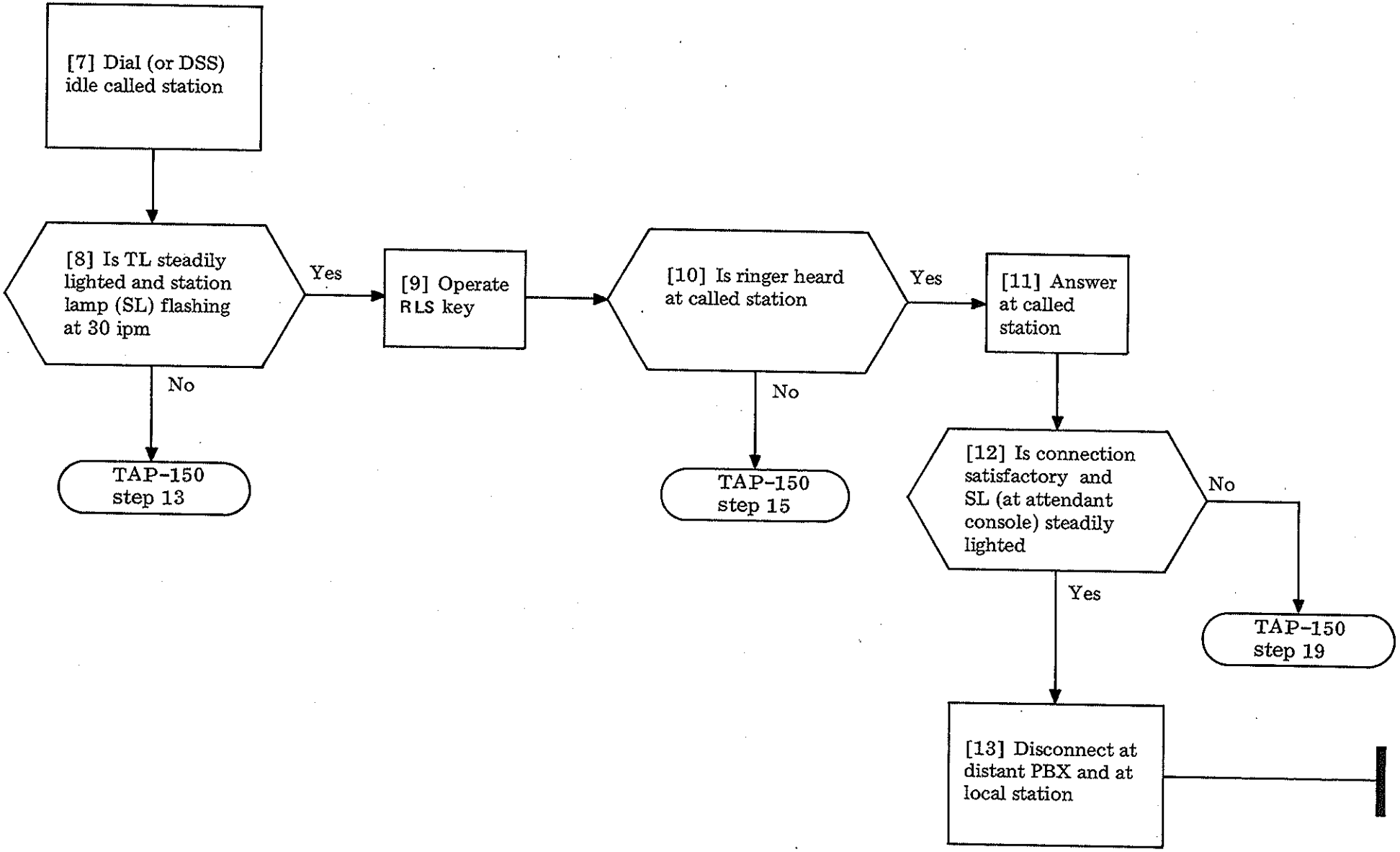

CLEAR INCOMING RINGDOWN TIE TRUNK TO STATION CALL TROUBLE (SD-65756)

SUMMARY

Place an outgoing ringdown tie trunk (RDTT) call via the RDTT in trouble. Make the call from either the attendant console or station, whichever reported the trouble. Advance the call until a failure occurs; then use the TAP or other reference given to locate the fault. Although no intermediate switching is involved between the two PBXs connected via the RDTT, transmission (either voice or signaling) failures usually require coordination via the test desk per local procedures. This procedure assumes there is one RDTT per dial access code (8 or 8—) and trouble has been tested (via test desk, etc) and proved to be at the local PBX.

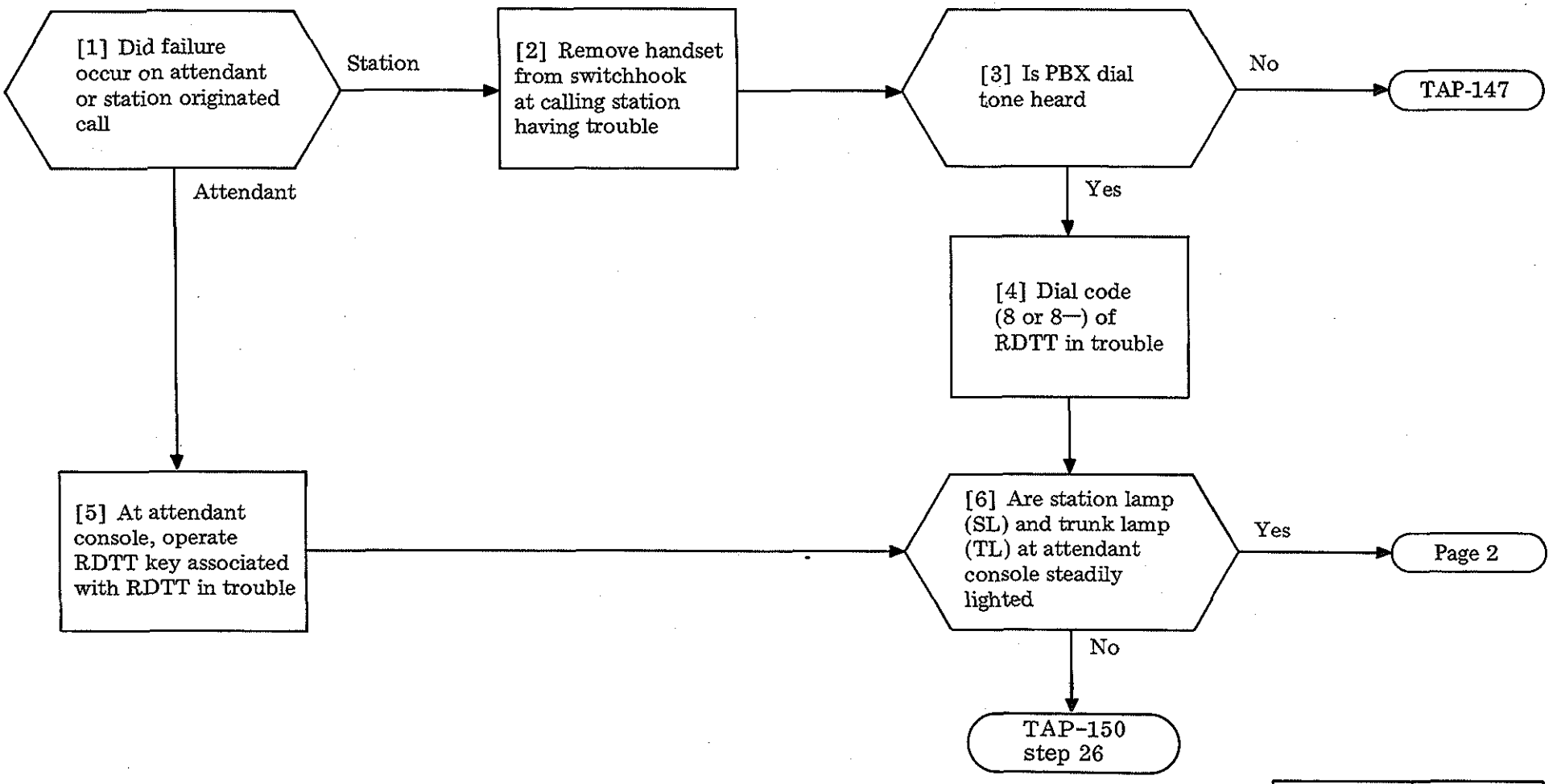

CLEAR OUTGOING MANUAL AND DIAL SELECTED TIE TRUNK CALL TROUBLE (SD-65756)

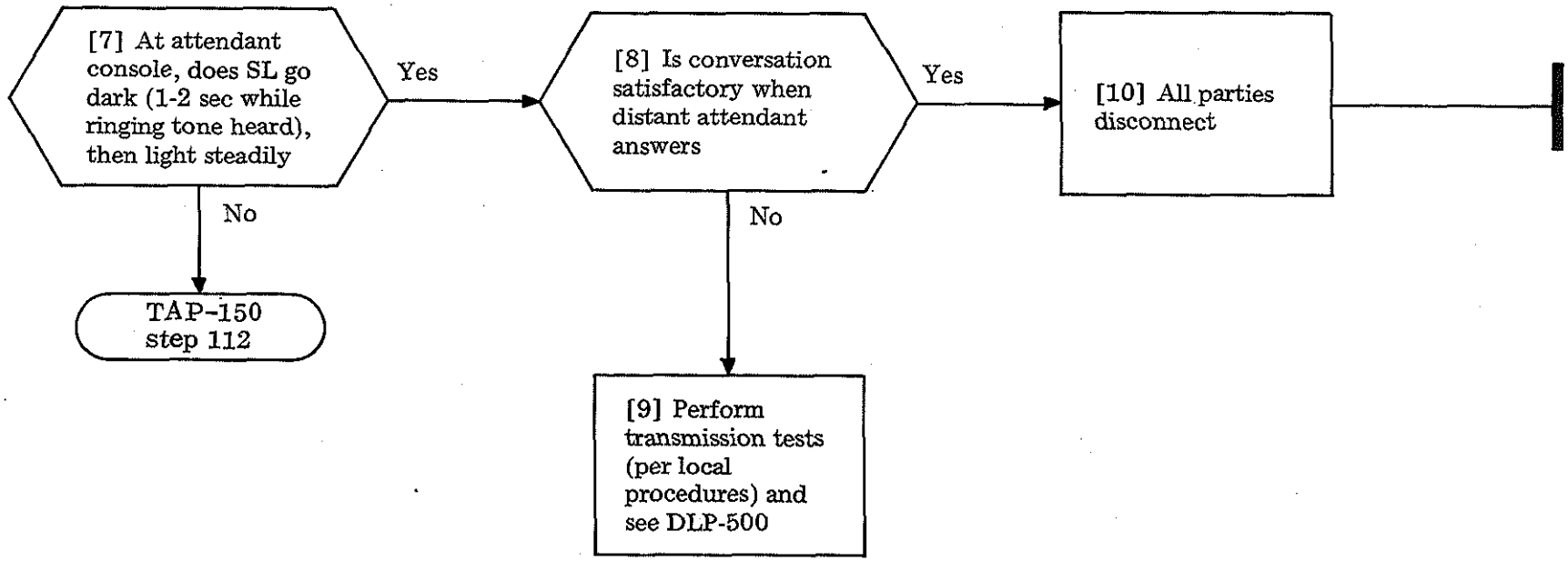

CLEAR OUTGOING MANUAL AND DIAL SELECTED TIE TRUNK CALL TROUBLE (SD-65756)

SUMMARY

Make test call(s) to the attendant from the station reported in trouble. If station is unrestricted, dial "0". If station is restricted and failed to reach attendant via intercept, dial same 9 or 9— code. When customer needs permit, busy out each "test ok" attendant trunk using the make-busy and busy display unit (slide 2), if provided. See NOTE 1, page 2. Verify at the attendant console which trunk was

- Seized — trunk lamp (TL) and/or station lamp (SL) flash at 120 ipm, or
- Released — TL and/or SL go dark.

Repeat test calls until fault is isolated.

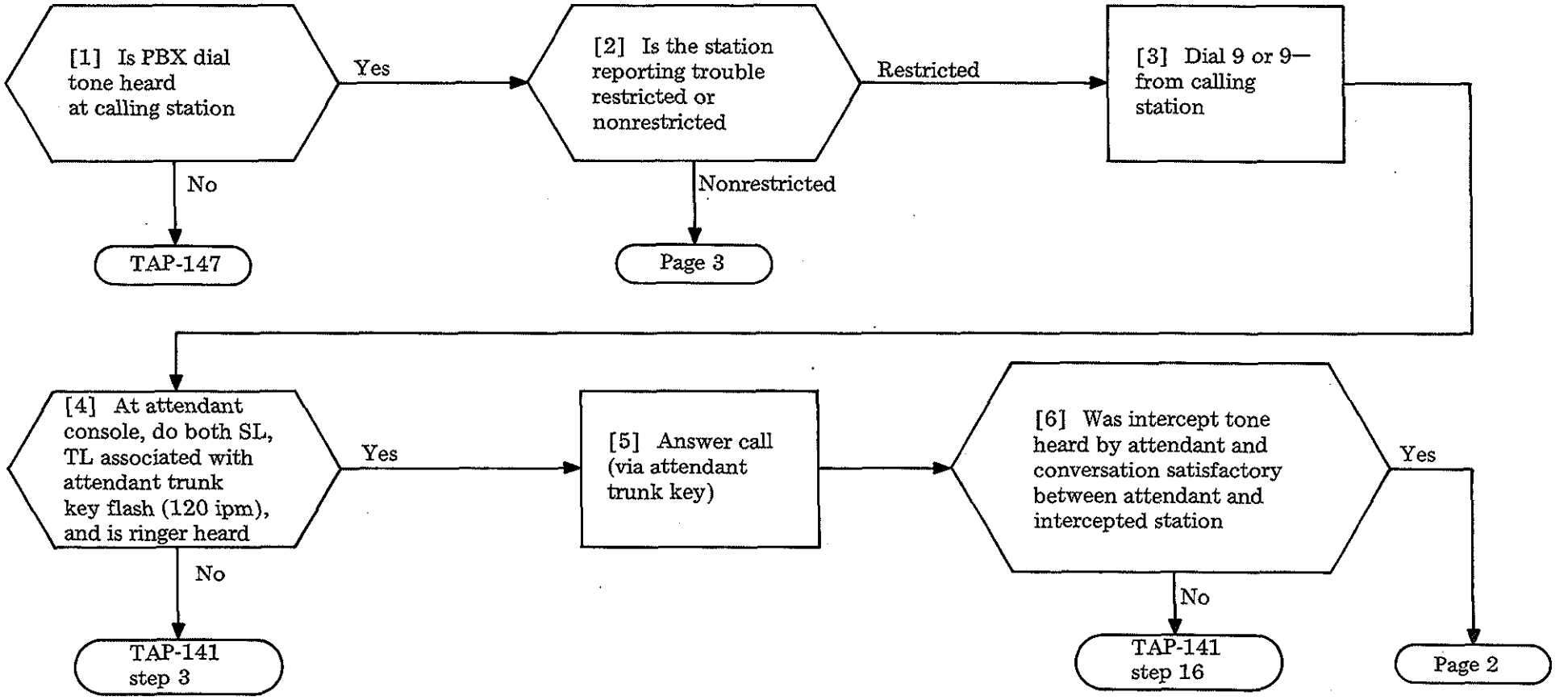

CLEAR STATION TO ATTENDANT TRUNK CALL TROUBLE (SD-65753)

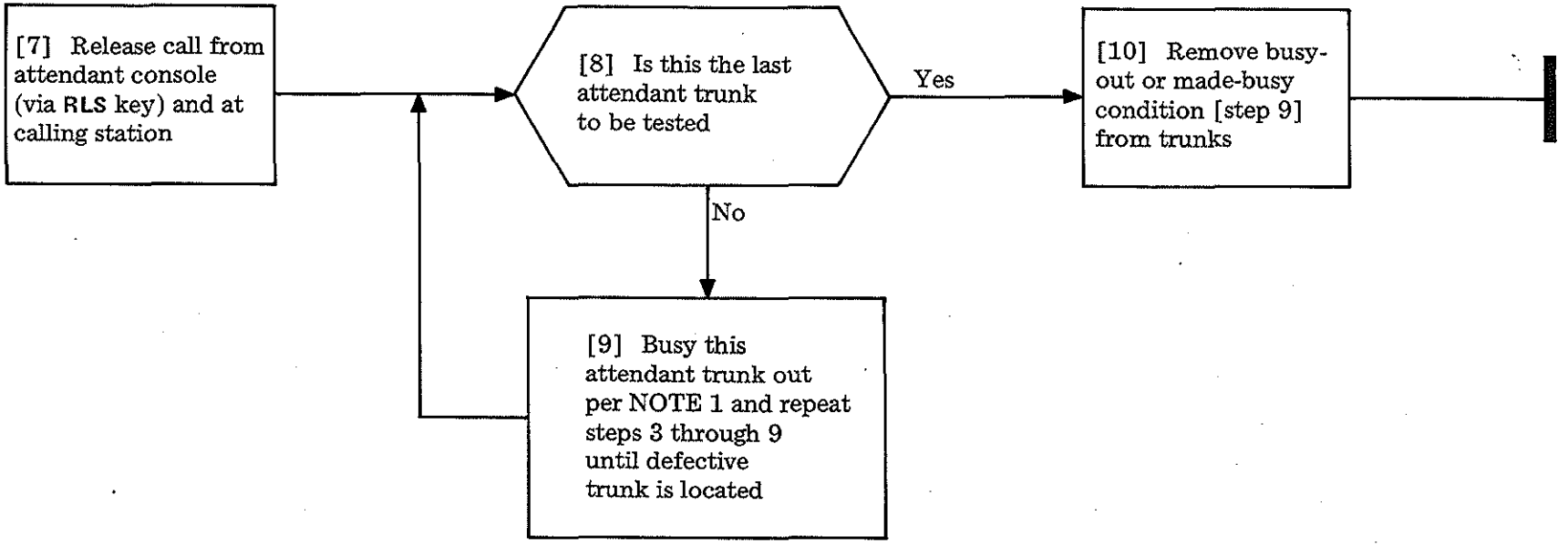

NOTE 1
Attendant trunk (0-2) units are mounted at top of slide 5.
Insulate 11M of B relay and block it operated, or operate associated attendant trunk key of make-busy and busy display unit (top of slide 2, if provided

CLEAR STATION TO ATTENDANT TRUNK CALL TROUBLE (SD-65753)

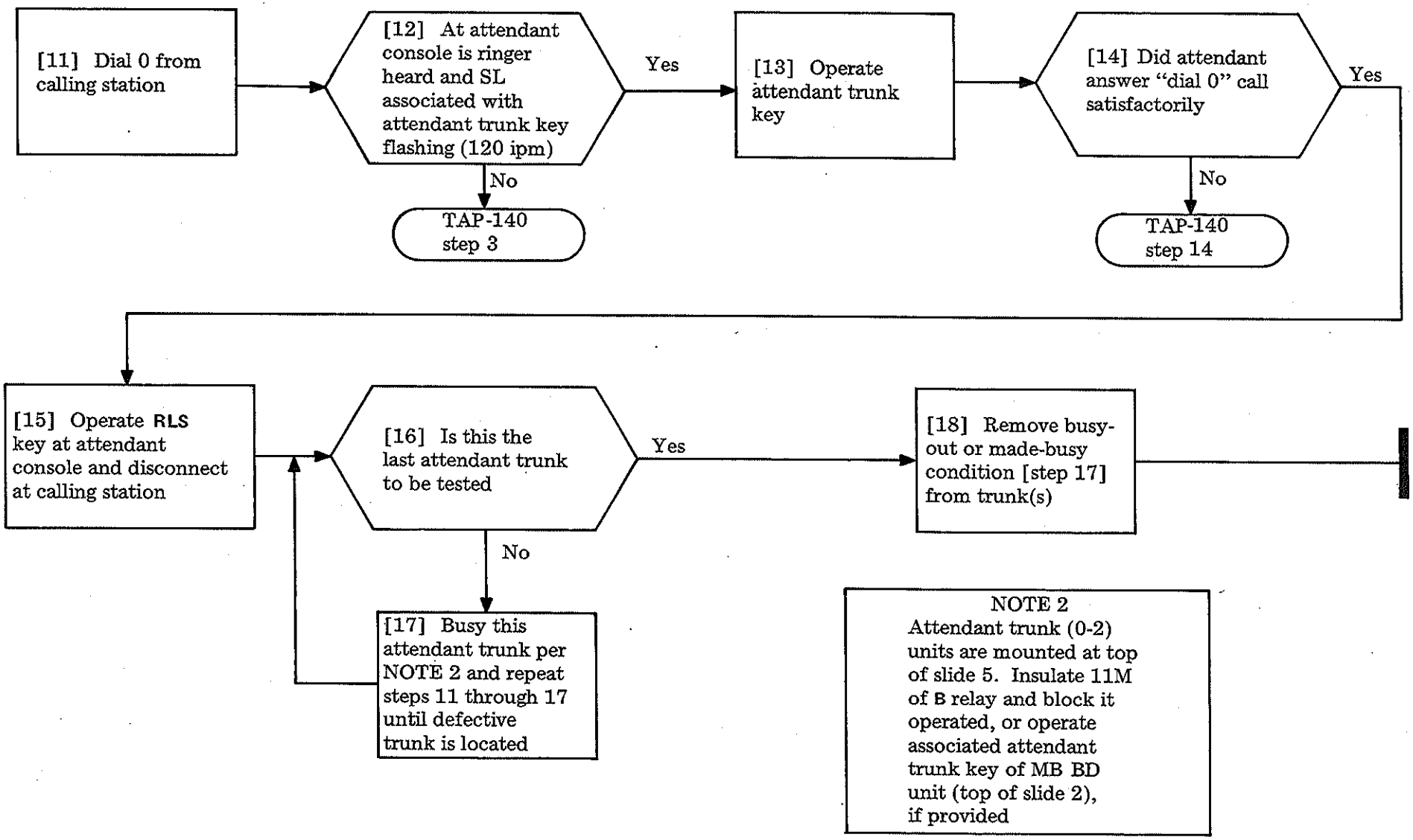

CLEAR STATION TO ATTENDANT TRUNK CALL TROUBLE (SD-65753)

SUMMARY

From an unrestricted station, dial the one- or 2-digit trunk access code (9 or 9—) of the central office (CO) trunk or trunk group reported in trouble. When possible, make call from station reporting the failure. When customer trunk needs permit, busy out each "test ok" trunk. See NOTE 2, page 2. Repeat test calls to the same trunk or trunk group until the fault is isolated. Verify at the attendant console which trunk was seized (station lamp [SL] and trunk lamp [TL] steadily lighted).

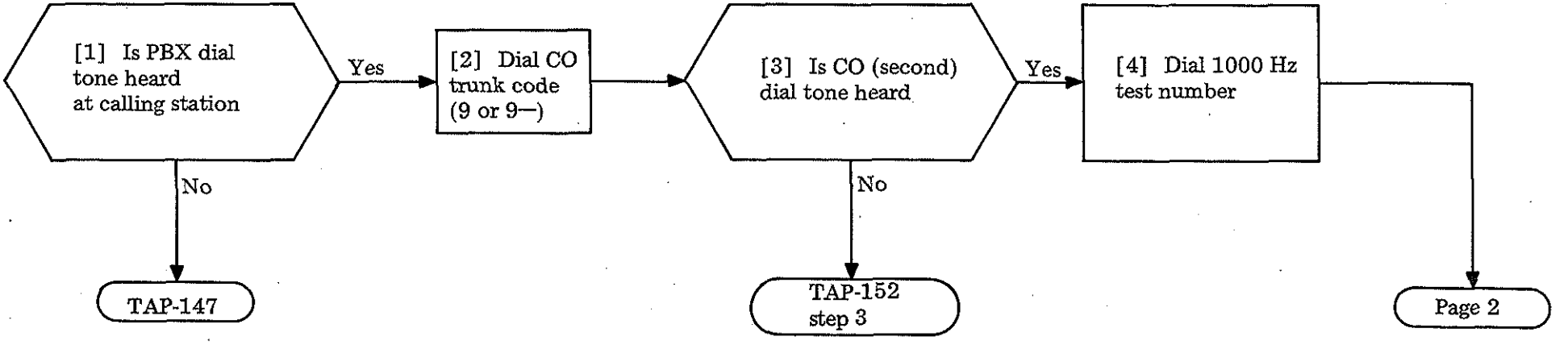

CLEAR STATION TO CENTRAL OFFICE TRUNK CALL TROUBLE (SD-65752)

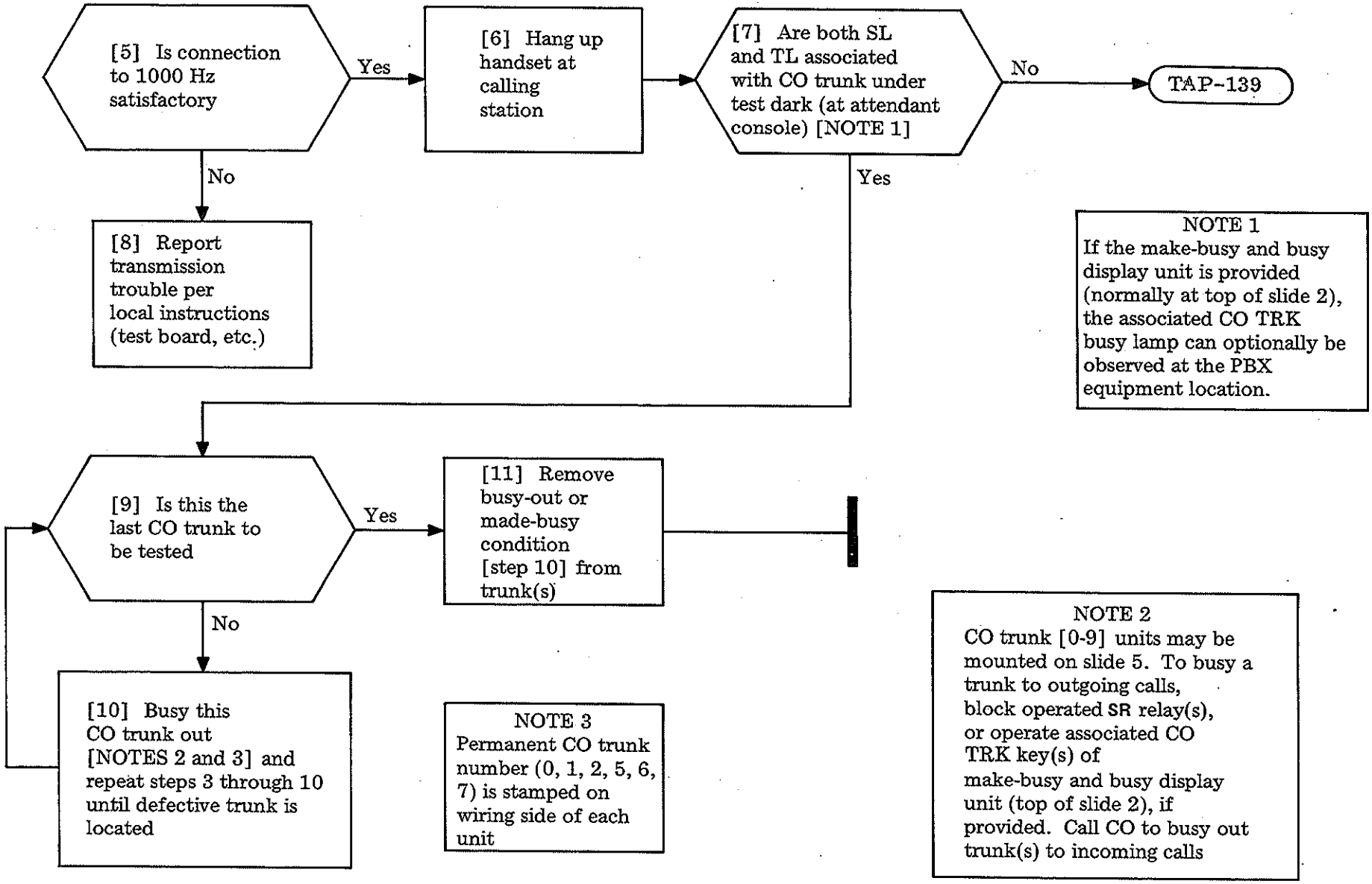

CLEAR STATION TO CENTRAL OFFICE TRUNK CALL TROUBLE (SD-65752)

SUMMARY

Using idle stations, originate a station-to-station call. If a normal result does not occur, locate the fault using the TAP reference given. If reported trouble occurred to a calling station, make the test call(s) *from* the station reported in trouble. Otherwise, make the call *to* the station reported in trouble. Repeat test calls (if necessary) until failure occurs; then start procedure at step indicated by failure.

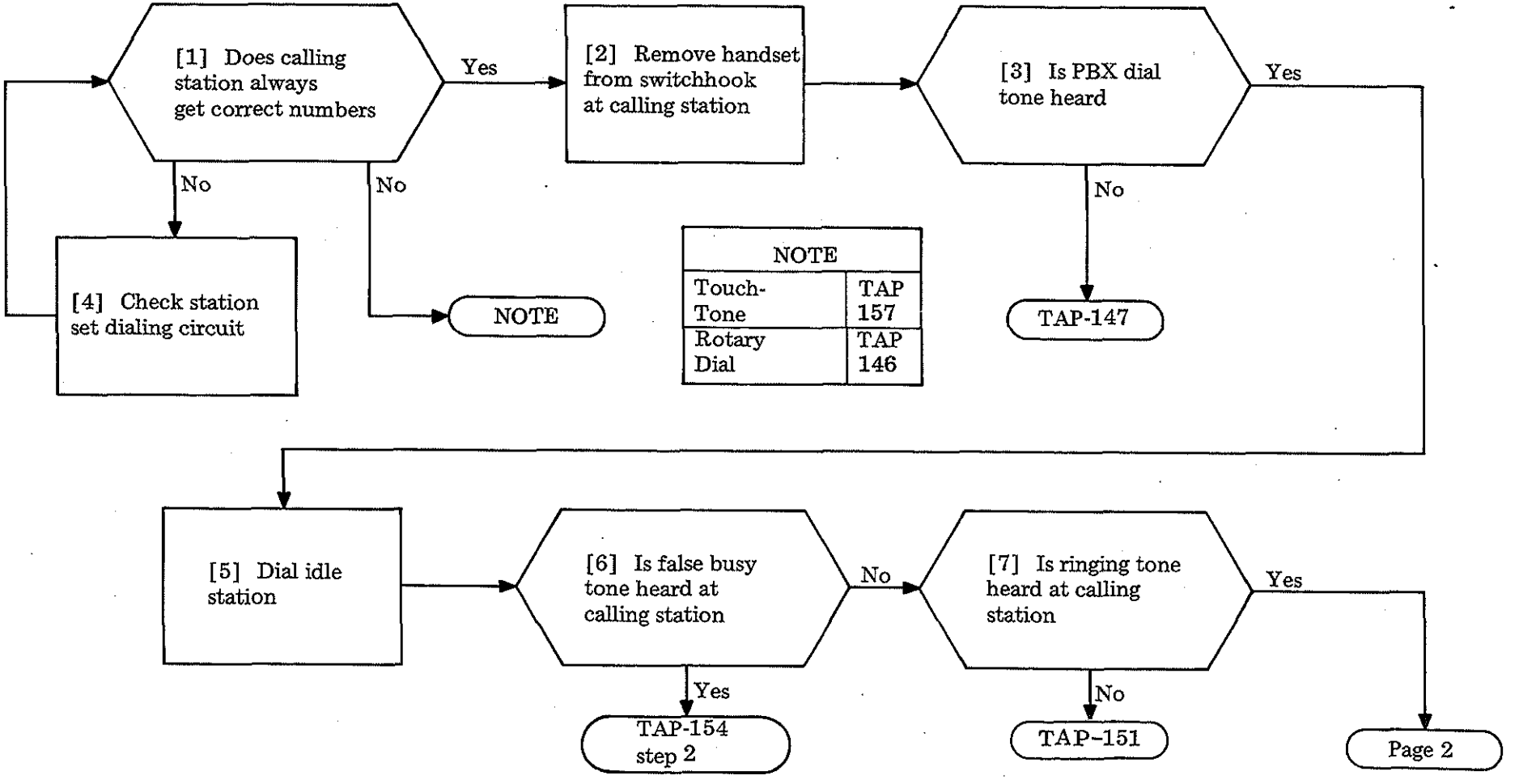

NOTE	
Touch-Tone	TAP 157
Rotary Dial	TAP 146

Issue 1	May 1975
551-100-101	TAP
PAGE 1 of 2	125

CLEAR STATION-TO-STATION CALL TROUBLE

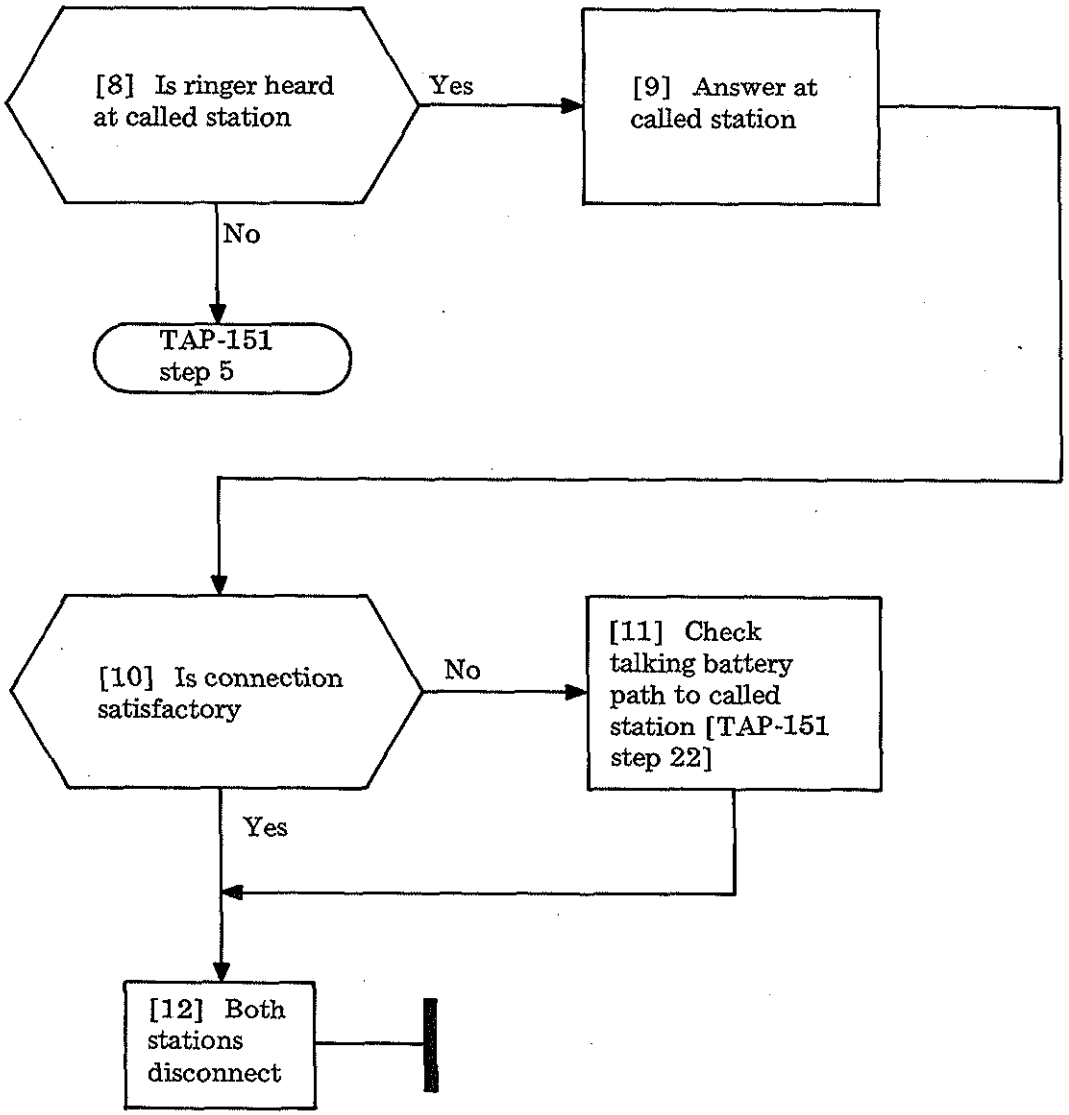

CLEAR STATION-TO-STATION CALL TROUBLE

SUMMARY

Determine whether audible signal fails on all incoming calls or fails at times on a certain incoming CO or attendant trunk. Use this procedure to help locate the trouble via

- Visual inspection
- Test call(s)

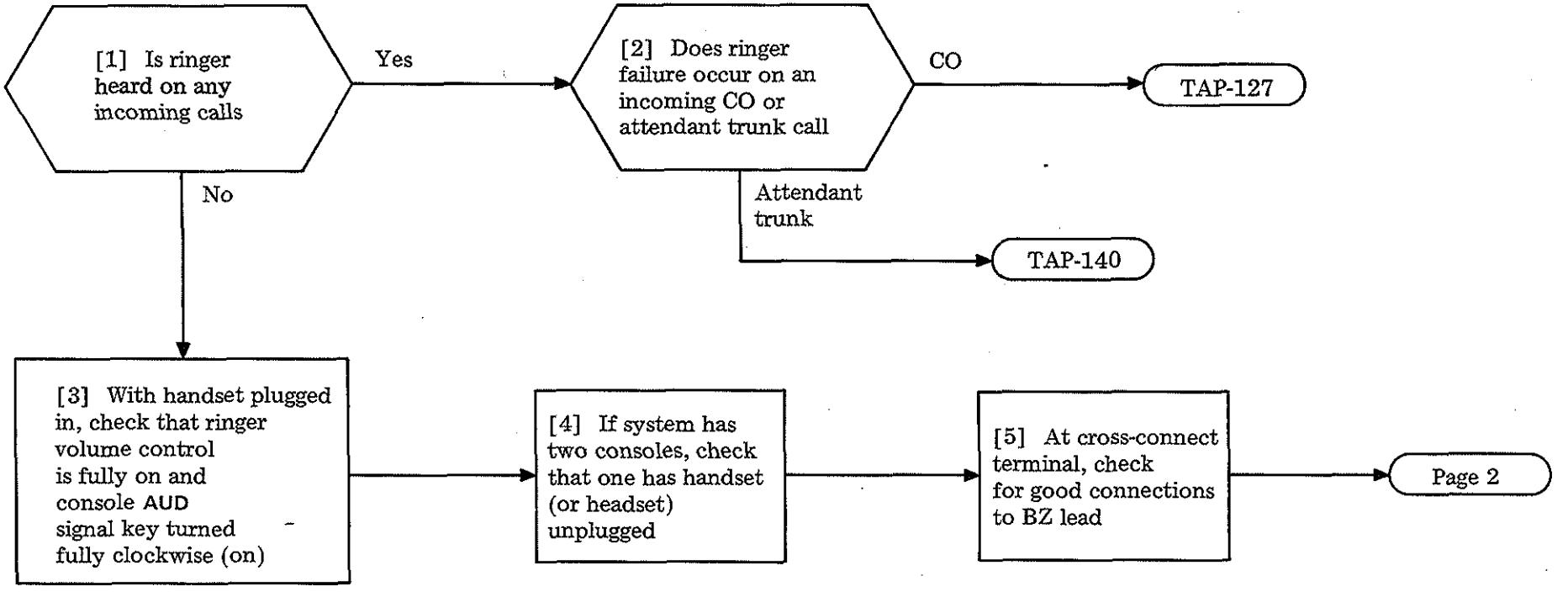

CLEAR ATTENDANT AUDIBLE SIGNAL TROUBLE

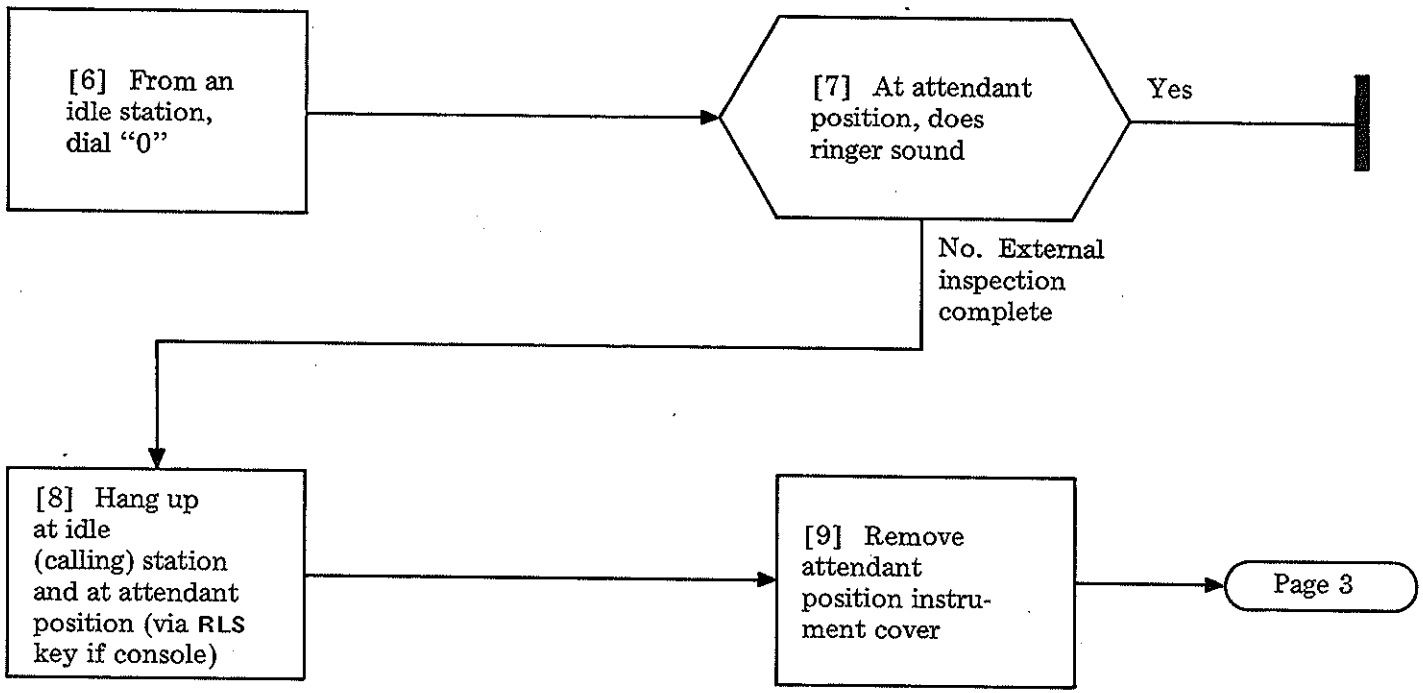

CLEAR ATTENDANT AUDIBLE SIGNAL TROUBLE

[10] Check adjustment of ringer armature, clapper, gongs, and bias spring. Check for loose screw connections and clear any foreign material (staples, paper clips, etc) or wiring that may be blocking movement of ringer components.

[11] From an idle station, dial 0

[12] At attendant position, is ringer heard

Yes → [14] Restore all equipment to normal

No → [13] Check ringer circuit per FIG. 1

No → TAP-140

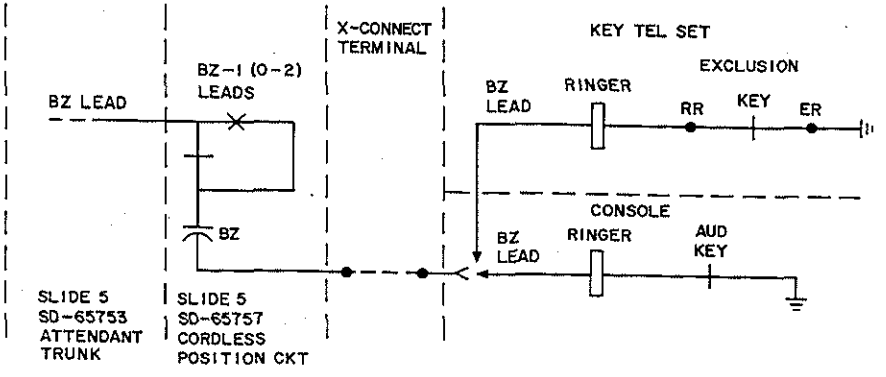

FIG. 1

CLEAR ATTENDANT AUDIBLE SIGNAL TROUBLE

SUMMARY

Using local procedures (test desk, etc.), initiate an incoming CO trunk call to the trunk equipment unit associated with the reported trouble. Observe the operation of relays in slide 5 [FIG. 1] as indicated by this procedure until a failure occurs. Ask the attendant to operate the associated CO trunk key, again observing the operation of the relays indicated. If a failure occurs, locate the fault using the figure or other reference given. Seized trunk unit can normally be identified by observing operation of R relay during ringing cycle.

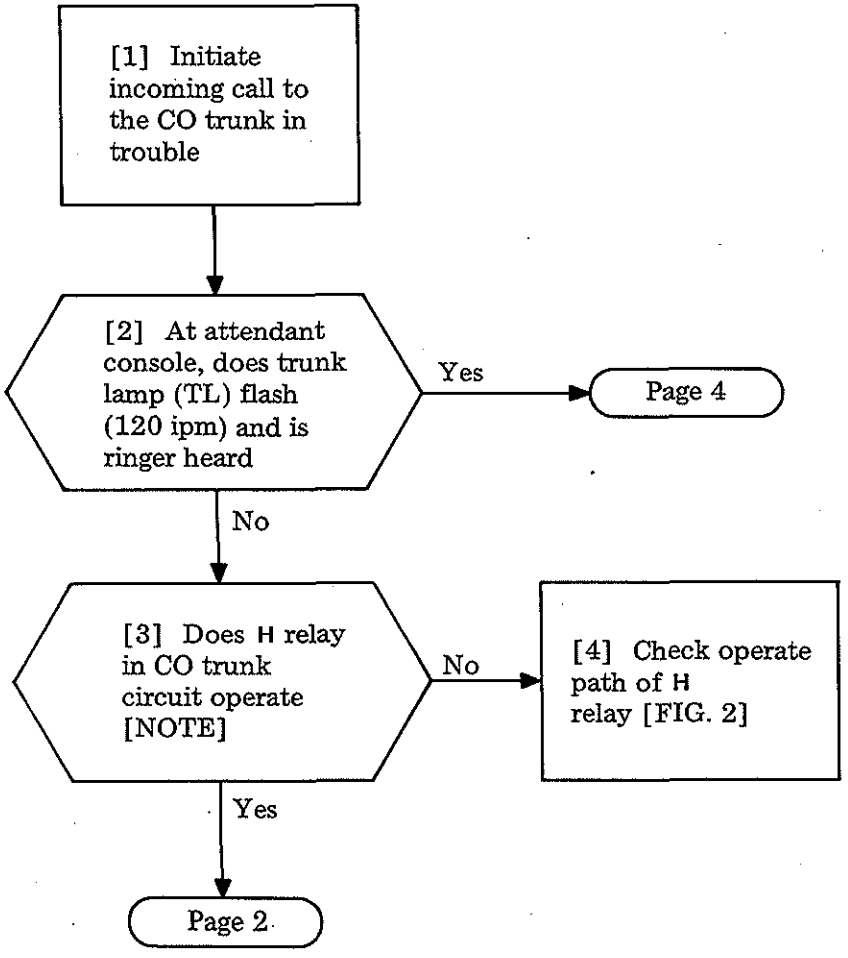

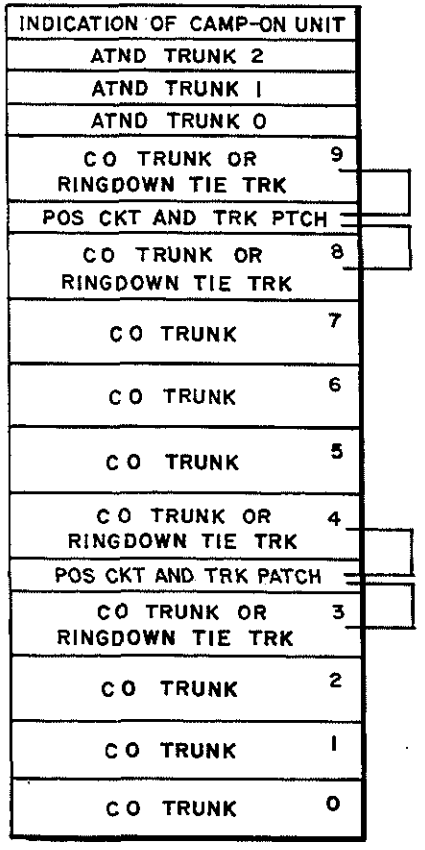

SLIDE 5

FIG. 1

NOTE
Remove cover to observe pulsing of armature during ringing

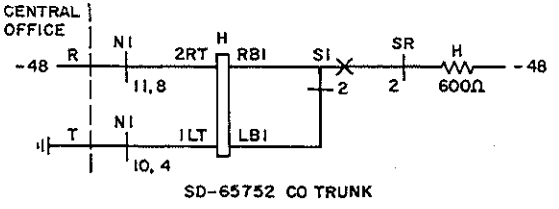

FIG. 2

Issue 1	May 1975
551-100-101	TAP
PAGE 1 of 5	127

[5] Did CT (cut through) relay operate

No → [6] Check operate path of CT relay [FIG. 3]

Yes ↓

[7] Did SR relay operate

No → [8] Check operate path of SR relay [FIG. 4] (TL steadily lighted if CO trunk seized during silent interval)

Yes ↓

[9] Does R (ringup) relay operate during ringing cycle and then release

No → [10] Check operate path or R relay [FIG. 5]

Yes ↓

[11] Does R1 (ringup auxiliary) relay operate

No → [12] Check operate path of R1 relay [FIG. 6]

Yes ↓

Page 3

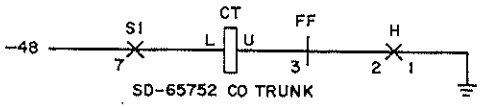

FIG. 3

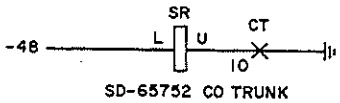

FIG. 4

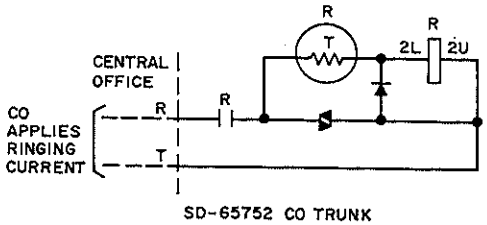

FIG. 5

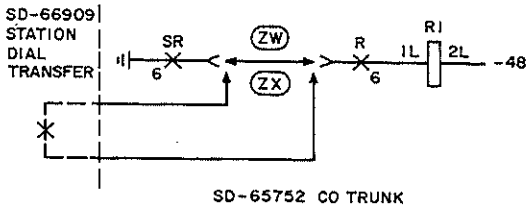

FIG. 6

Issue 1	May 1975
551-100-101	TAP
PAGE 2 of 5	127

CLEAR ATTENDANT CAN'T BE CALLED ON CENTRAL OFFICE TRUNK TROUBLE (SD-65752)

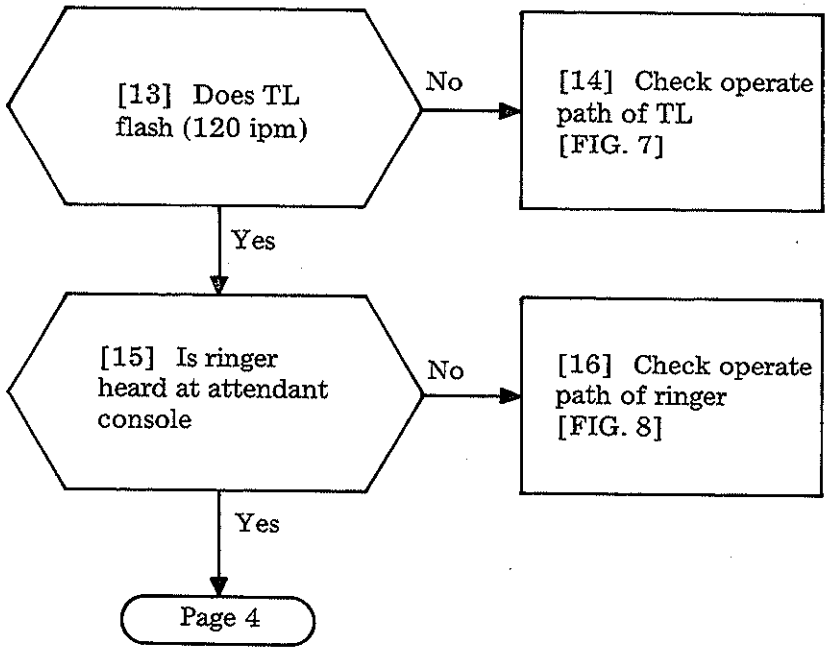

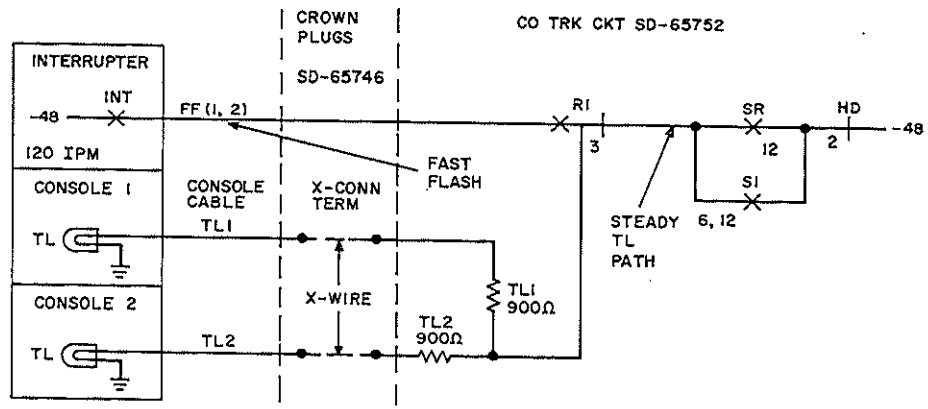

FIG. 7

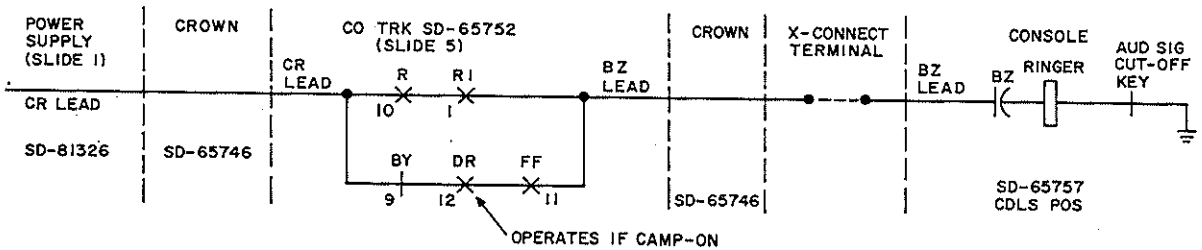

FIG. 8

Issue 1	May 1975
551-100-101	TAP
PAGE 3 of 5	127

CLEAR ATTENDANT CAN'T BE CALLED ON CENTRAL OFFICE TRUNK TROUBLE (SD-65752)

[17] Operate CO trunk key associated with flashing (120 ipm) TL

[18] Did ACA (attendant connector) relay operate

No → [19] Check operate path of ACA relay [FIG. 9]

Yes

[20] Did AC (attendant connector) relay operate

No → [21] Check operate path of AC relay [FIG. 10]

Yes

[22] Did S (supervisory) relay operate

No → [23] Check operate path of S relay [FIG. 11]

Yes

Page 5

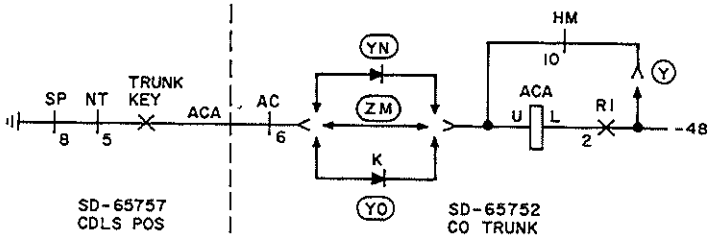

FIG 9

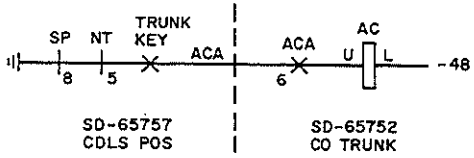

FIG. 10

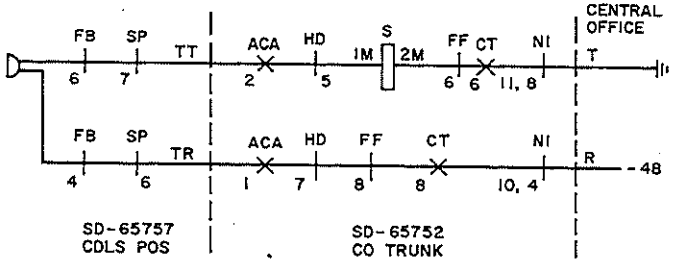

FIG. 11

Issue 1	May 1975
551-100-101	TAP
PAGE 4 of 5	127

CLEAR ATTENDANT CAN'T BE CALLED ON CENTRAL OFFICE TRUNK TROUBLE (SD-65752)

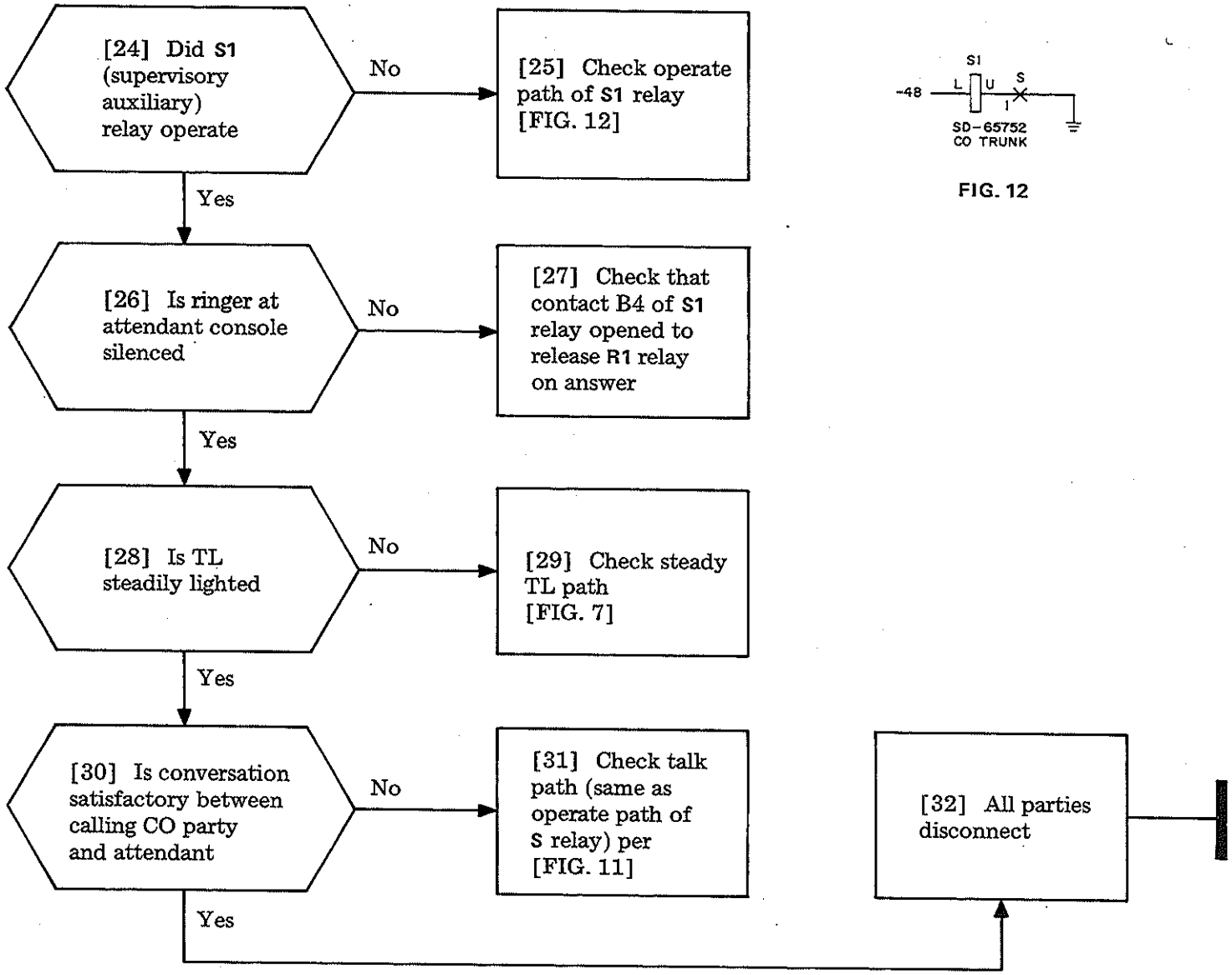

FIG. 12

CLEAR ATTENDANT CAN'T BE CALLED ON CENTRAL OFFICE TRUNK TROUBLE (SD-65752)

SUMMARY

From attendant console, originate and advance a conference (CONF) call until a failure occurs. Observe the operation of each associated line hold magnet and the connection of each vertical to the switching network at slide 2, crossbar switch 2 [FIG. 5]. The five conference ports may be associated with any five numbers from 80 to 89, which are connected to five of verticals 0 through 9. A central office (CO) conferee may connect to port 5 only. This procedure assumes ports 1 through 5 are connected to verticals 5 through 9. The plug-in conference equipment (SD-66908) is located in slide 2 on four adjacent mounting plates (above plate Q, location is optional).

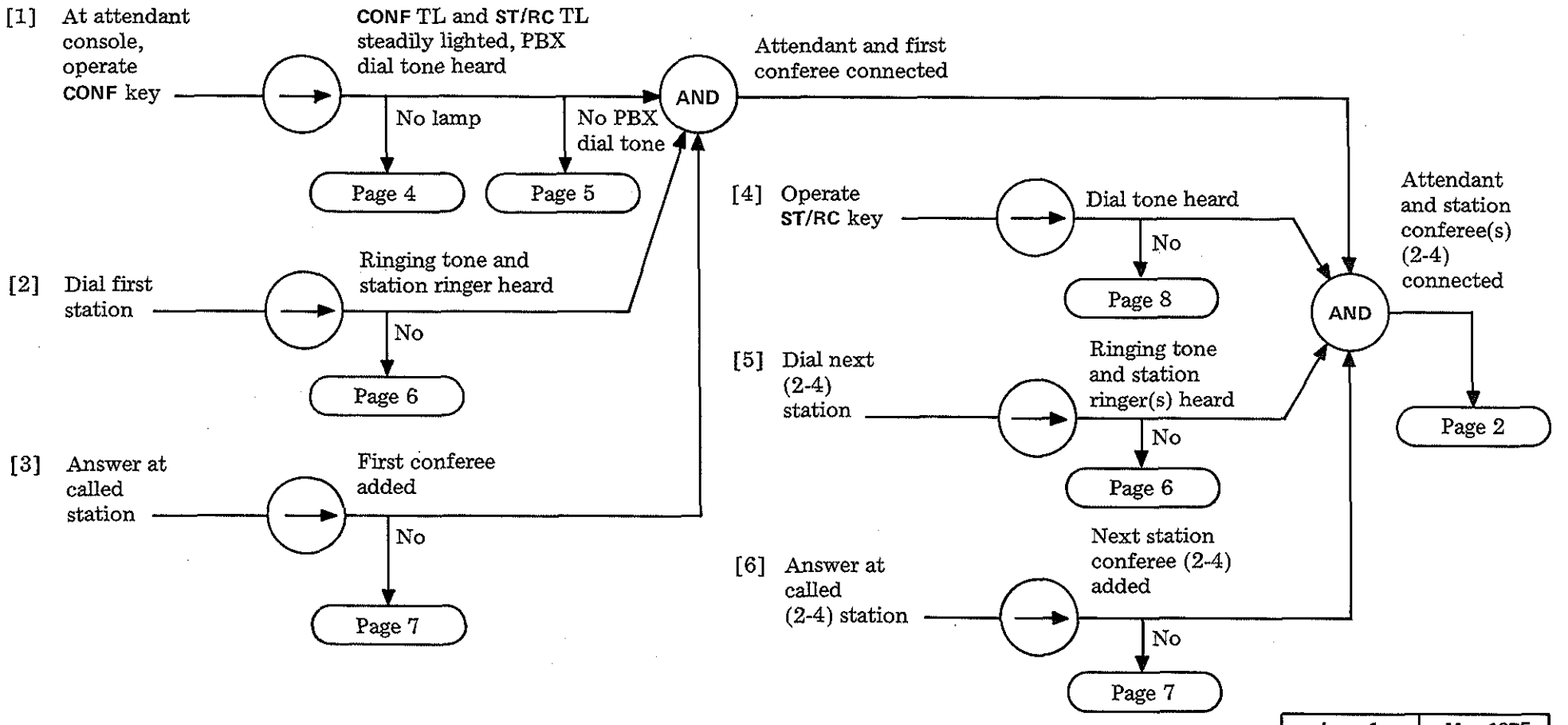

Issue 1	May 1975
551-100-101	TAP
PAGE 1 of 11	128

CLEAR ATTENDANT-CONTROLLED CONFERENCE TROUBLE (SD-66908)

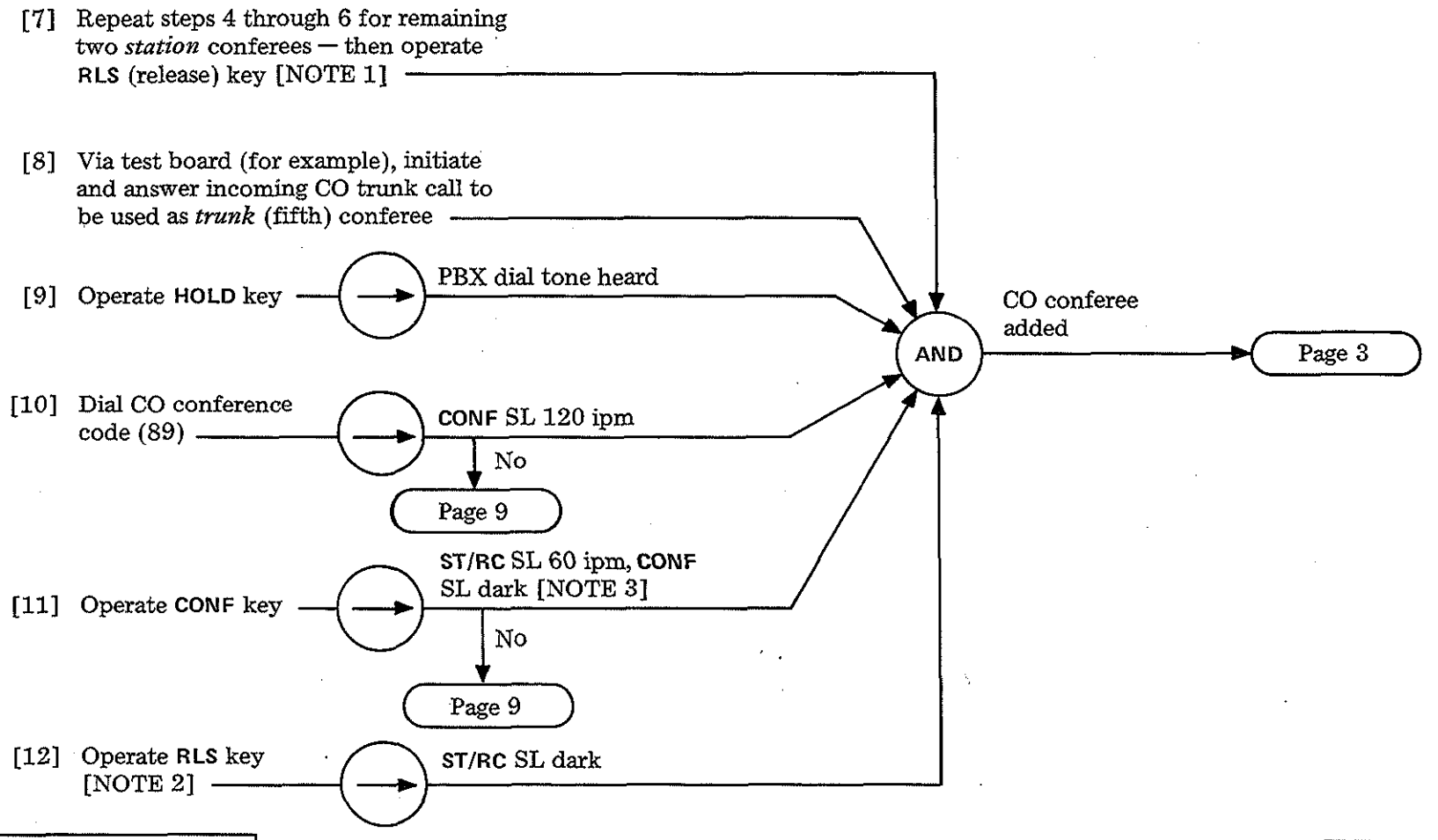

NOTE 1
- Without lockout — attendant can reenter conference by reoperating CONF key
- With lockout — attendant can only reenter conference (via CONF key) if recalled

NOTE 2
RLS key mechanically releases CONF key, which releases the L, ON, ONA, and CRDK relays. See Fig. 1-3 (page 4) and Fig. 12 (page 7)

NOTE 3
ST/RC SL flashes at 60 ipm to indicate a full conference

CLEAR ATTENDANT-CONTROLLED CONFERENCE TROUBLE (SD-66908)

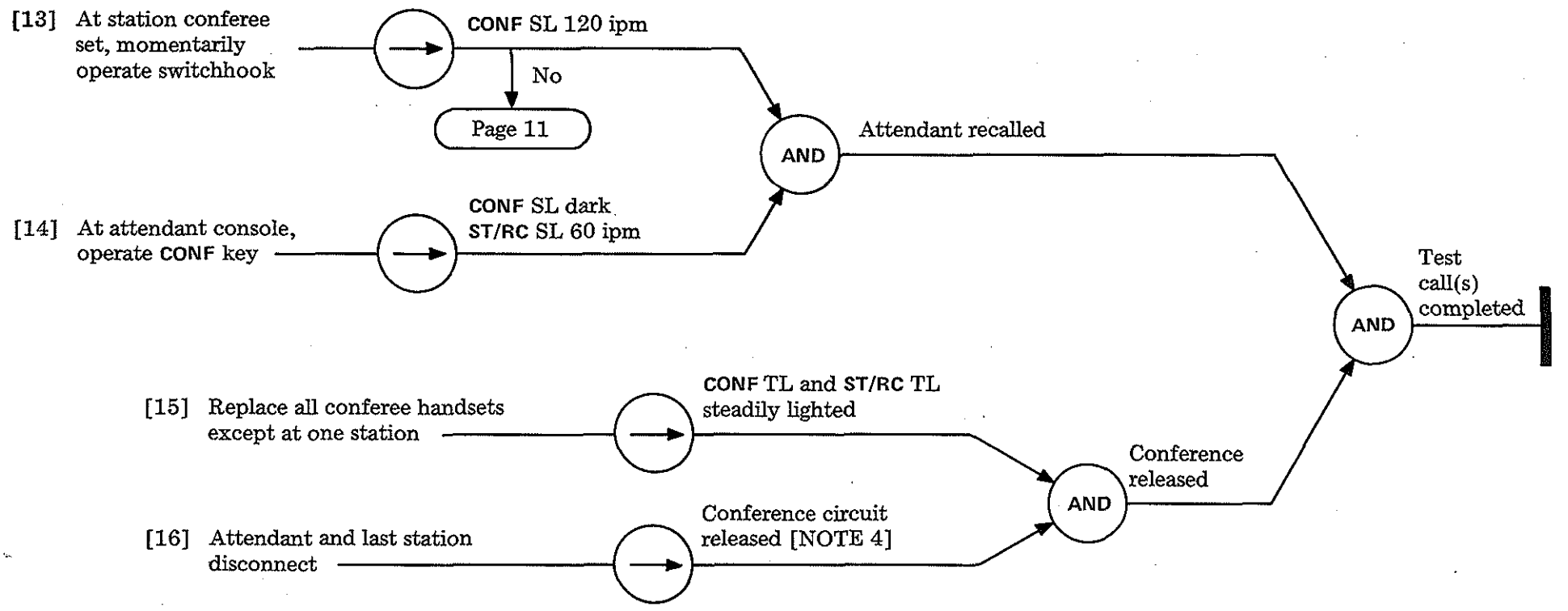

NOTE 4
With the release conference (option Z) feature, attandant can force release of all conferees by holding the ST/RC key operated for five seconds.

CLEAR ATTENDANT-CONTROLLED CONFERENCE TROUBLE (SD-66908)

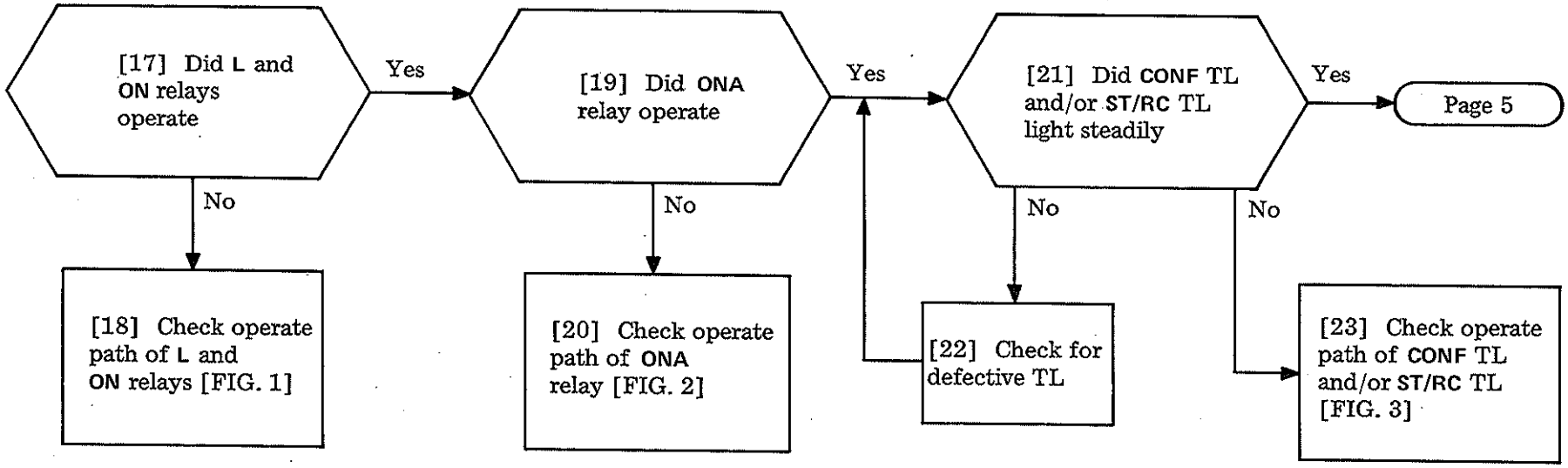

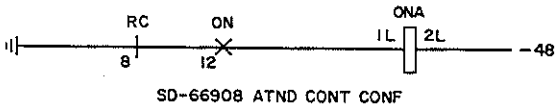

FIG. 2

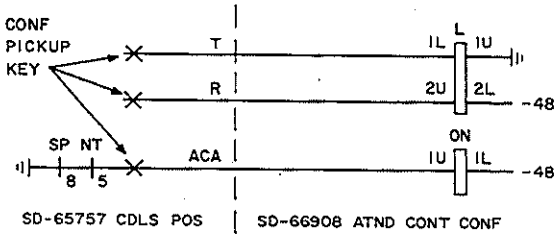

FIG. 1

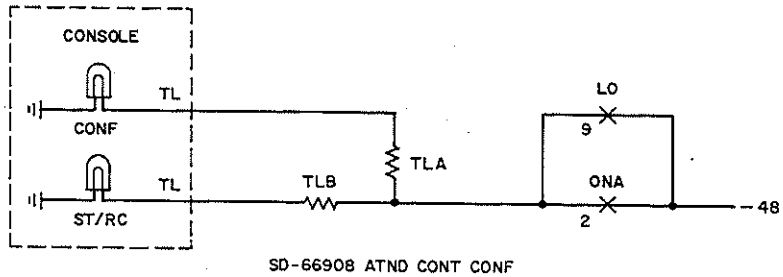

FIG. 3

CLEAR ATTENDANT-CONTROLLED CONFERENCE TROUBLE (SD-66908)

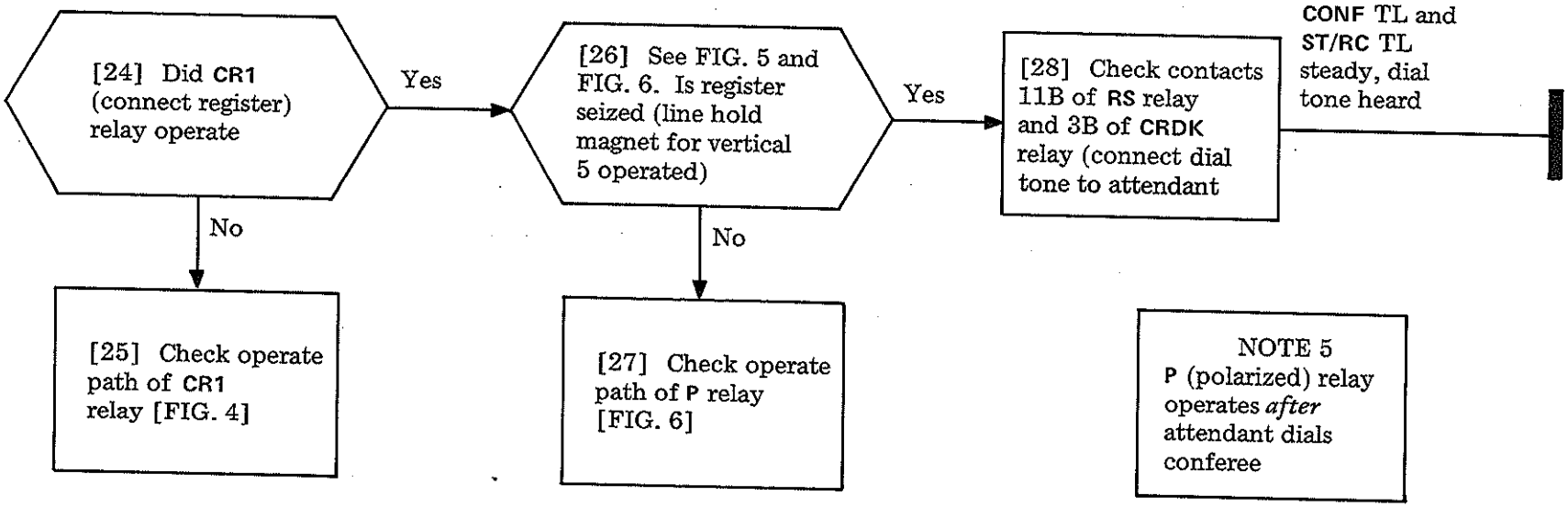

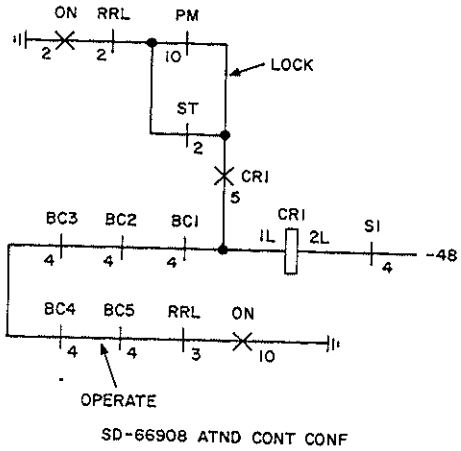

FIG. 4

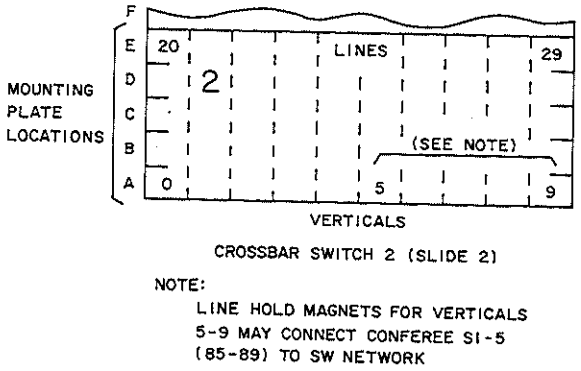

FIG. 5

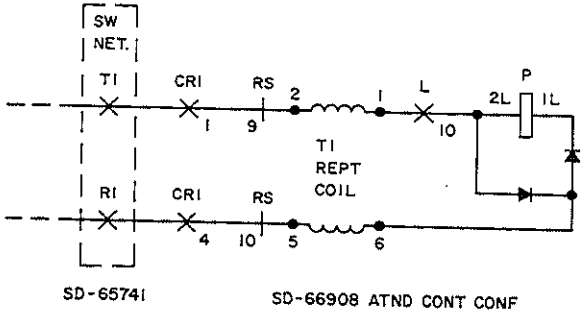

FIG. 6

CLEAR ATTENDANT-CONTROLLED CONFERENCE TROUBLE (SD-66908)

[29] Verify that L relay [FIG. 1] follows dial pulses and repeats them via 10M [FIG. 6]

[30] Do P and MC (marker connect) relays operate and release after station dialed

No → [31] Check operate path of P [FIG. 6] and MC [FIG. 7] relays

Yes → [32] Did PM (path memory) relay operate

No → [33] Check operate path of PM relay [FIG. 8]

Yes → [34] Did RS (ring start) relay operate

No → [35] Check operate path or RS relay [FIG. 9]

Yes → [36] Does attendant hear ringing tone

No → [37] Check ringing tone path [FIG. 10]

Ringing tone and station ringer heard

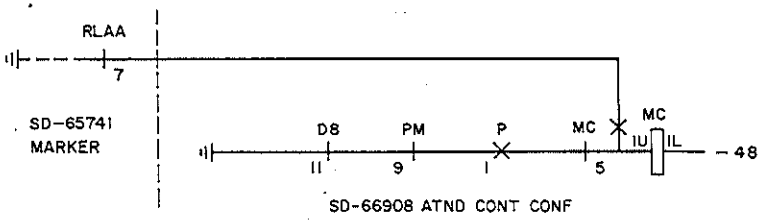

FIG. 7

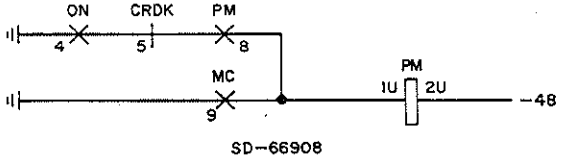

FIG. 8

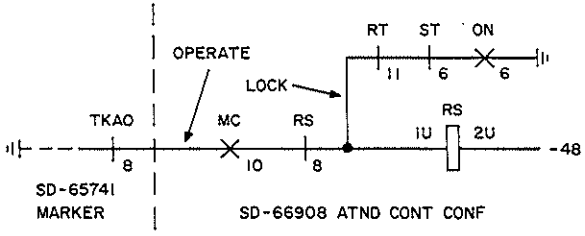

FIG. 9

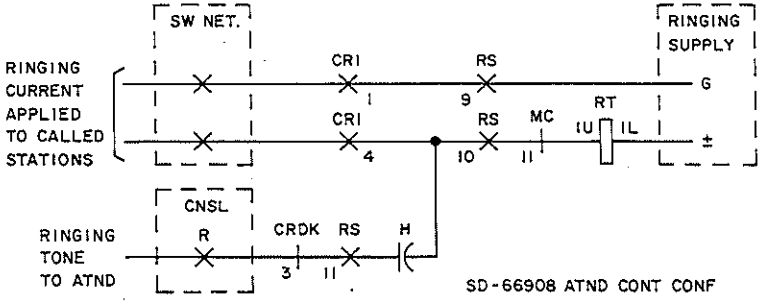

FIG. 10

Issue 1	May 1975
551-100-101	TAP
PAGE 6 of 11	128

CLEAR ATTENDANT-CONTROLLED CONFERENCE TROUBLE (SD-66908)

[38] Is station ringer silenced

No → [39] Did **RT** (ring trip) relay operate

No → [40] Check operate path of **RT** relay [FIG. 10, page 6]

Yes → [41] Check for foreign ground locking **RS** relay operated [FIG. 13] (**RS** should release via 11B of **RT**)

Yes → [42] Did **BC 1/5** (buss connect) relay operate and hold [NOTE 7]

No → [43] Check operate path of **BC (1/5)** relay [FIG. 11]

Yes → [44] Did **S 1/5** relay operate

Yes → [46] Did **CRDK** (call register down check) relay operate

Yes → [48] Check 4M of **CRDK** relay. If conference is unsatisfactory (poor transmission, etc), replace J99294AA plug-in conference bridge unit (slide 2)

Station conferees (1-4) added

No → [45] Check 1M and 2M of **BC (1/5)** relay (operate path of **S** relay)

No → [47] Check operate path of **CRDK** relay [FIG. 12]

NOTE 7

BC (1/5) relay locks operated via 4M of relay **BCH (1/5)**

NOTE 6

Relay number corresponds to conferee dialed:

Conferee	Relay No.
First	1
Second	2
Third	3
Fourth	4
Fifth	5

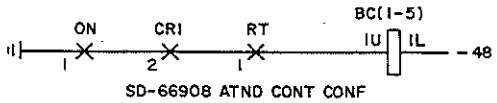

FIG. 11

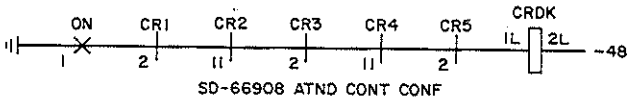

FIG. 12

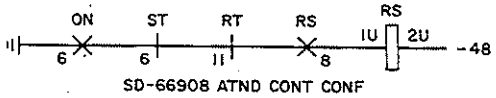

FIG. 13

CLEAR ATTENDANT-CONTROLLED – CONFERENCE TROUBLE (SD-66908)

[49] Did ST (start) relay operate and release

Yes → [53] Is line hold magnet [per FIG. 5] operated

No → [50] Check operate path of ST relay [FIG. 14]

[53] Is line hold magnet [per FIG. 5] operated

Yes → [55] Check contacts 11B and 3B of CRDK relay (which connect dial tone to attendant → Dial tone heard

No → [54] Check operate path through conference circuit of line hold magnet [FIG. 16]

[50] Check operate path of ST relay [FIG. 14]

[51] Is PBX dial tone heard

Yes → [52] Check operate path of CR 2/5 relay [FIG. 15]

No → [52] Check operate path of CR 2/5 relay [FIG. 15]

[52] Check operate path of CR 2/5 relay [FIG. 15]

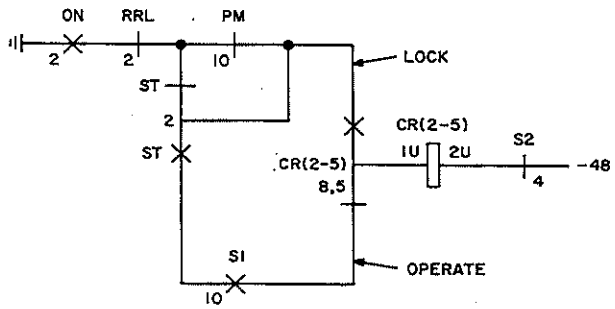

FIG. 15

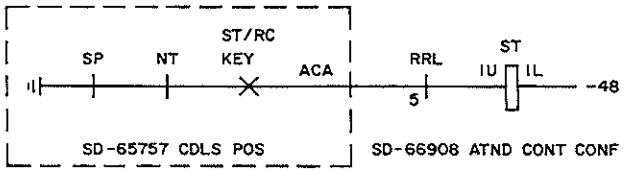

FIG. 14

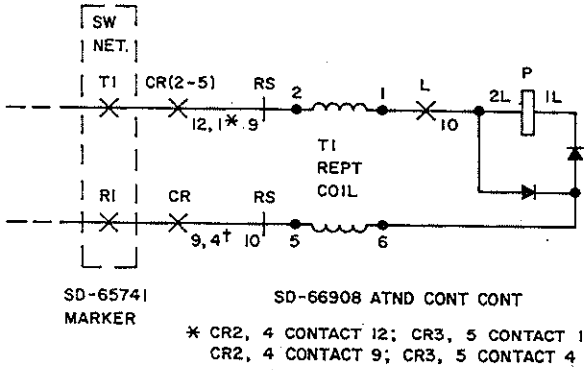

FIG. 16

CLEAR ATTENDANT-CONTROLLED CONFERENCE TROUBLE (SD-66908)

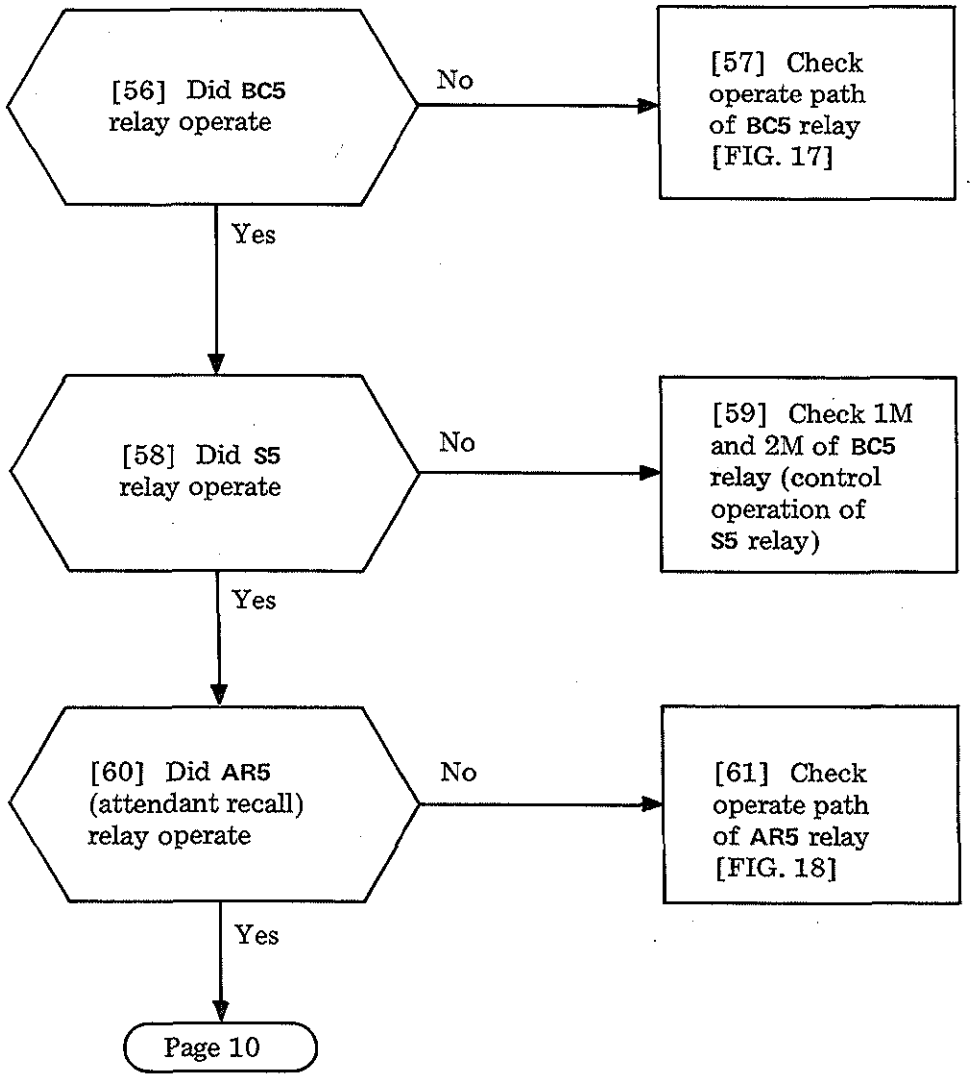

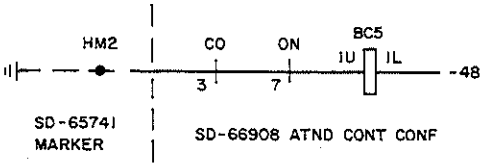

FIG. 17

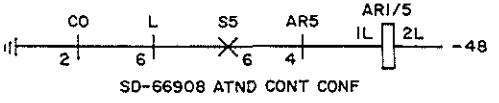

FIG. 18

CLEAR ATTENDANT-CONTROLLED CONFERENCE TROUBLE (SD-66908)

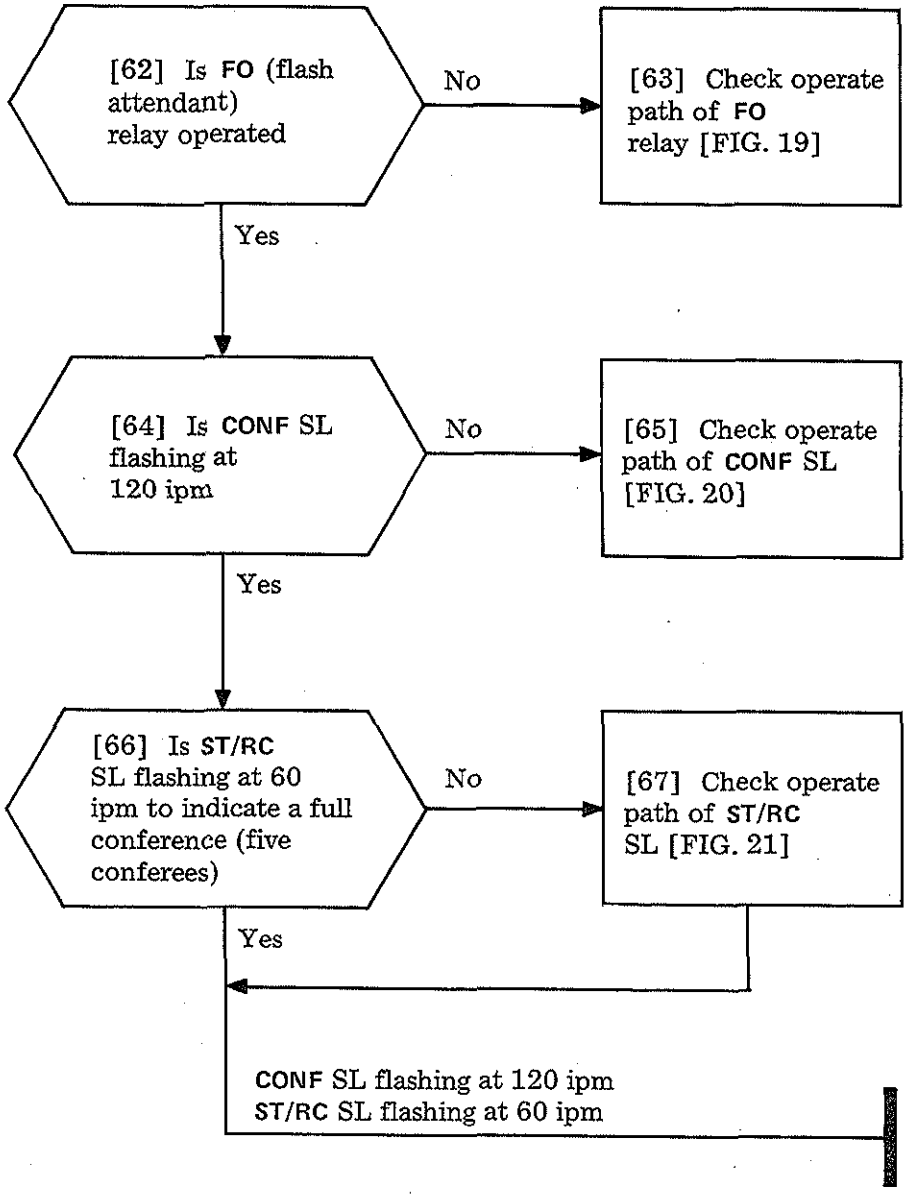

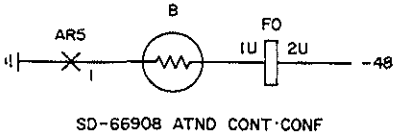

FIG. 19

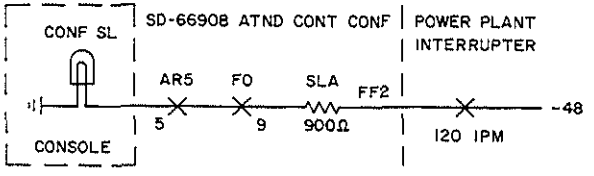

FIG. 20

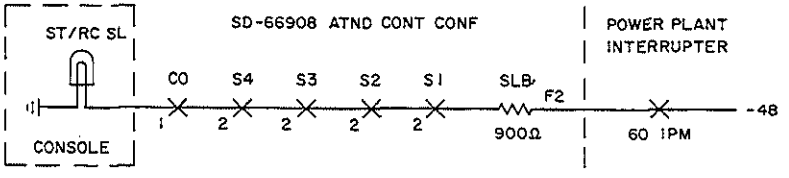

FIG. 21

CLEAR ATTENDANT-CONTROLLED CONFERENCE TROUBLE (SD-66908)

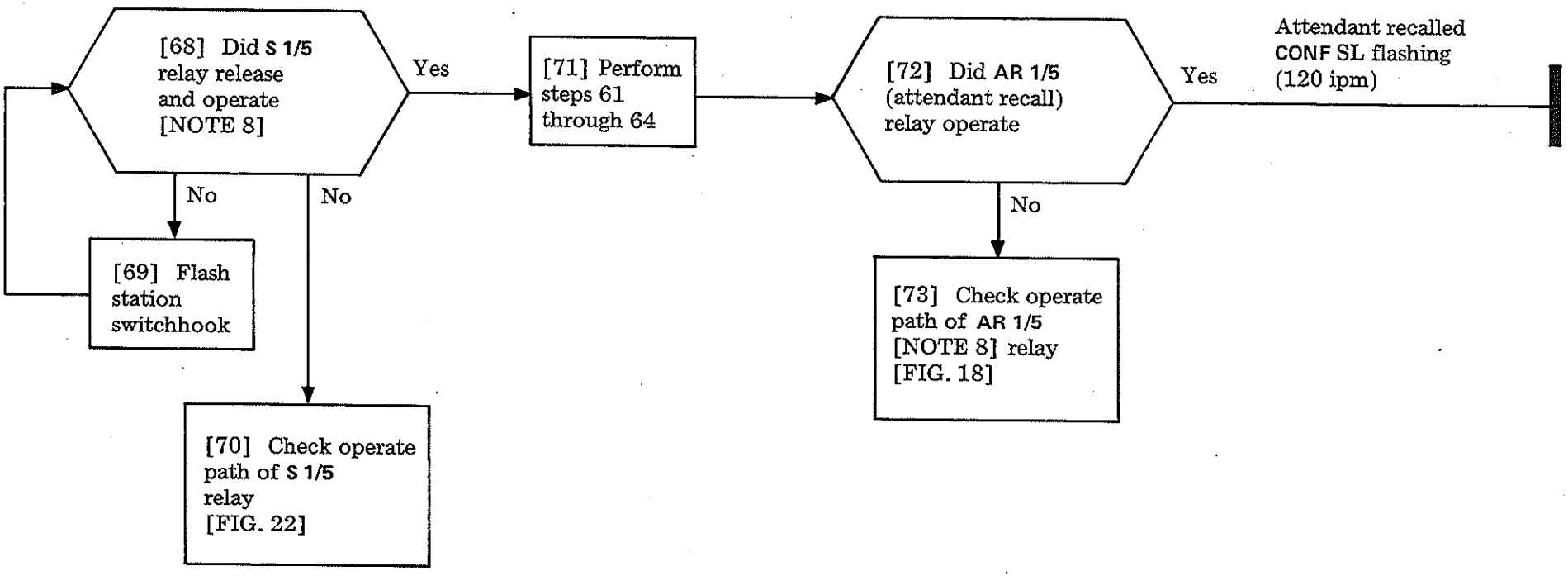

NOTE 8

Relay number corresponds to conferee dialed:

Conferee	Relay No.
First	1
Second	2
Third	3
Fourth	4
Fifth	5

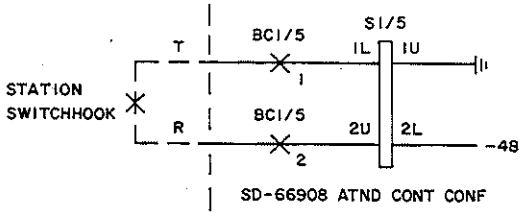

FIG. 22

CLEAR ATTENDANT-CONTROLLED CONFERENCE TROUBLE (SD-66908)

SUMMARY

Using the attendant console, operate an idle attendant trunk key. When PBX dial tone is heard, hold operated (about two seconds) the direct station selection (DSS) key of idle station (DSS key lamp dark) associated with the trouble. If the ringer sounds at the called station and the DSS key lamp lights steadily, the DSS feature functioned correctly. Repeat test call(s) until failure occurs. Isolate fault using the figure or other reference given in this procedure. Equipment and relay locations are given by slide and mounting plate position. For example, ACO (6G) is in slide 6 on plate G.

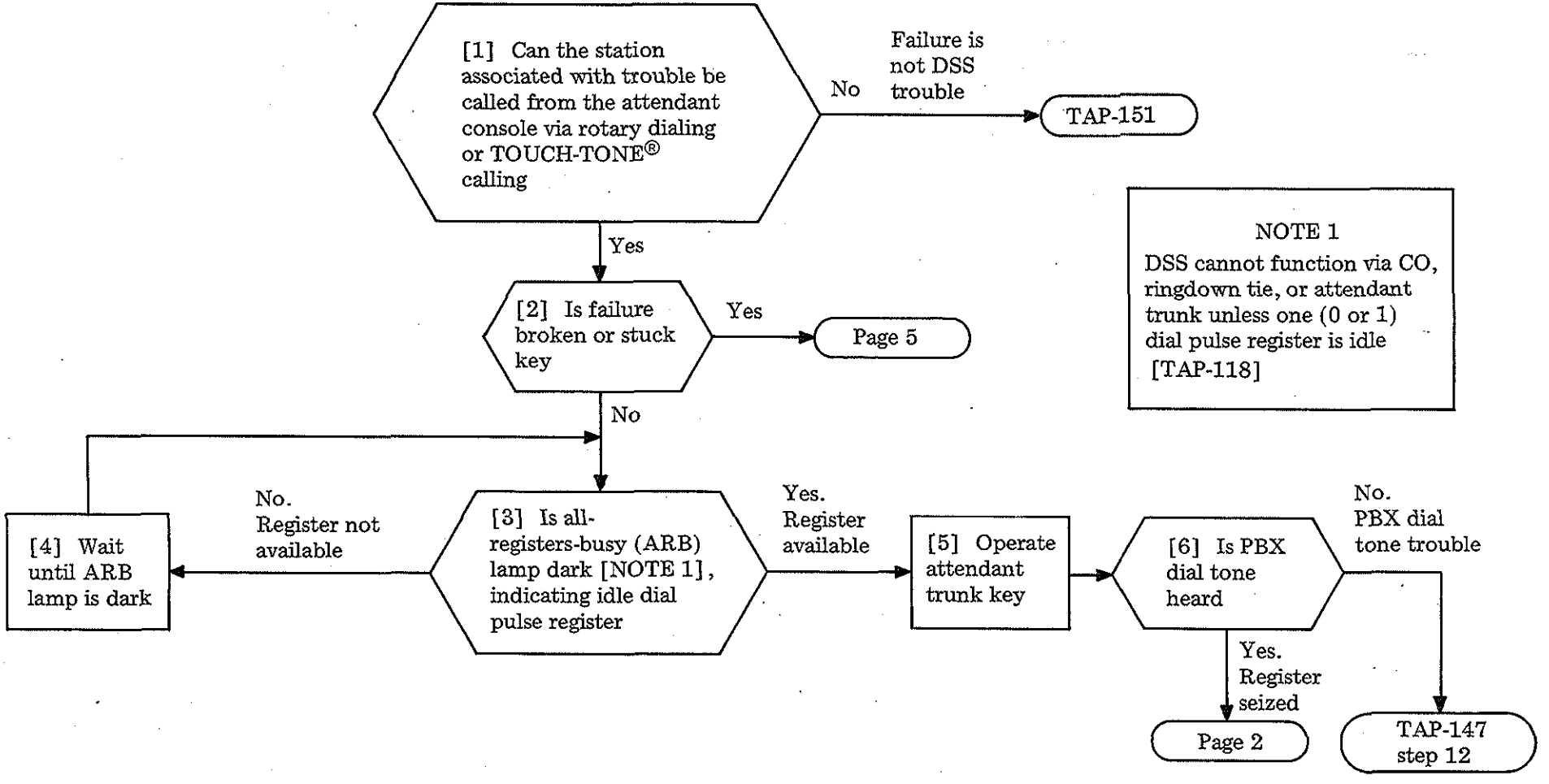

[7] Hold attendant DSS key (associated with idle station in trouble) operated for about two seconds See NOTE 2 (example)

[8] Did associated DSS key lamp light steadily

Yes → DSS circuitry functioned correctly

No ↓

[9] Did ringer sound at called station

Yes → [10] Check operate path of DSS key (busy) lamp [FIG. 1]

No ↓ Page 3

NOTE 2

If DSS key 42 is operated, ground is mechanically connected to operate relays **TD** (tens digit) **4** and **UD** (units digit) **2** of the marker-selected dial pulse register. On crossbar switch 4, the marker then operates line hold magnet 2, connecting the called station directly (without dialing) to the switching network

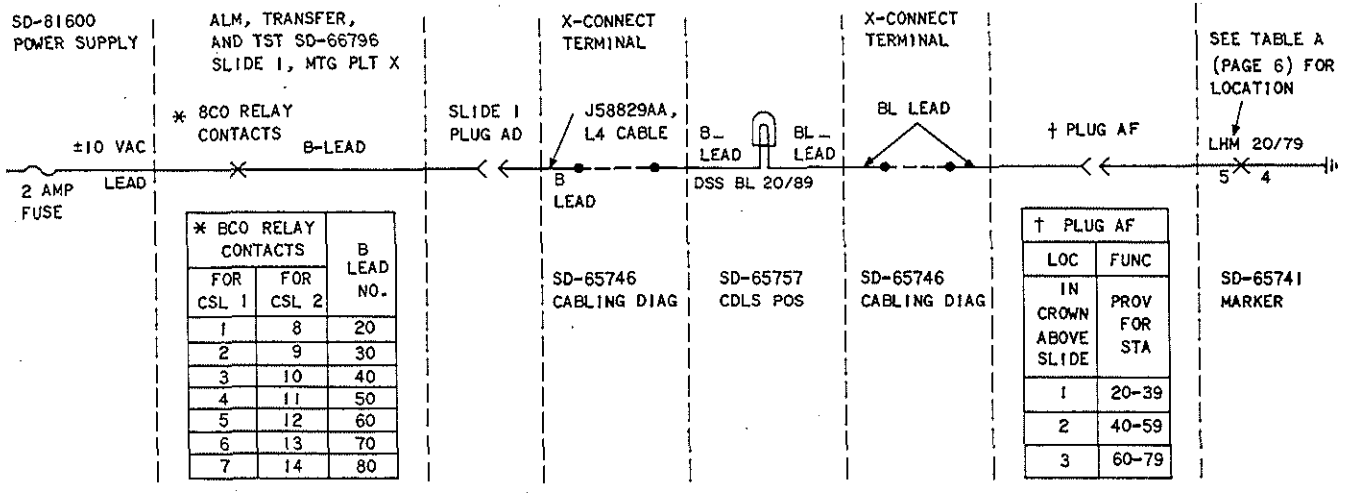

* 8CO RELAY CONTACTS		B LEAD NO.
FOR CSL 1	FOR CSL 2	
1	8	20
2	9	30
3	10	40
4	11	50
5	12	60
6	13	70
7	14	80

† PLUG AF	
LOC	FUNC
IN CROWN ABOVE SLIDE	PROV FOR STA
1	20-39
2	40-59
3	60-79

FIG. 1

CLEAR ATTENDANT DIRECT STATION SELECTION TROUBLE (SD-65742)

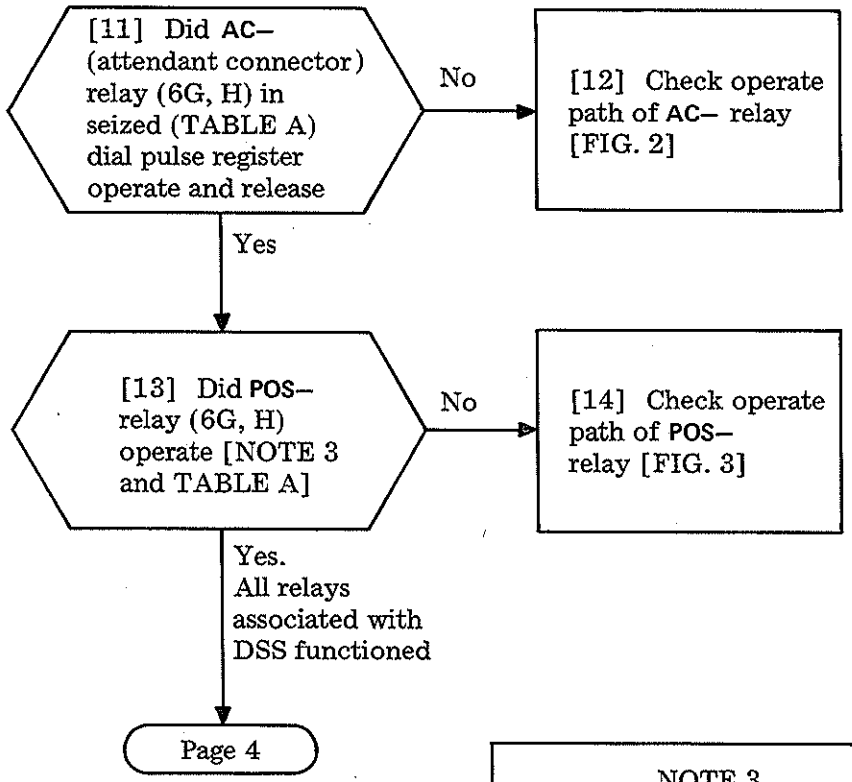

NOTE 3
Ground from the console in use operates one POS– relay only, which prevents interference via DSS keys at unattended console

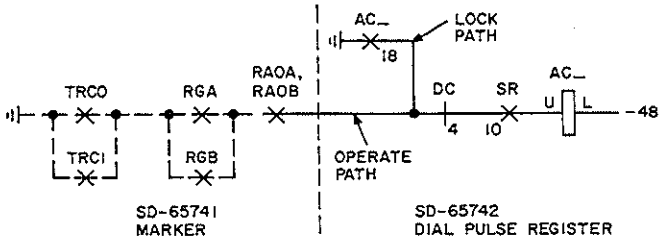

FIG. 2

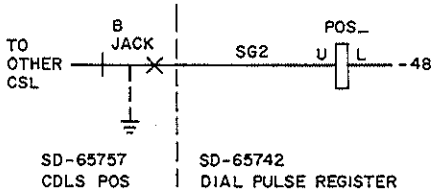

FIG. 3

TABLE A			
EQ ASSOCIATED WITH AC– AND POS– RELAYS (6G, 6H)			
REG		CONSOLE	
0	1	1	2
AC0	AC1	POS1	POS2

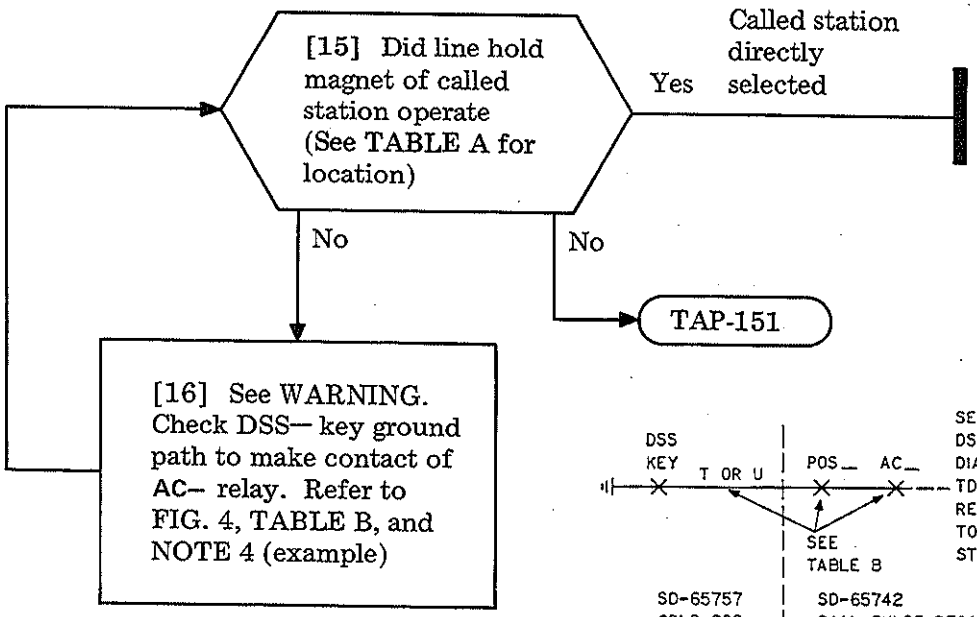

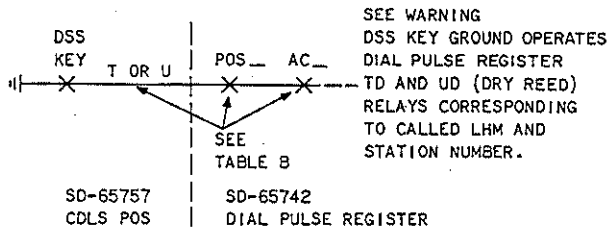

FIG. 4

TABLE A			
STATIONS	LINE HOLD MAG LOC		
	SLIDE	SWITCH	VERTICAL
20—29	2	2	0—9
30—39		3	
40—49	3	4	
50—59		5	
60—69	4	6	
70—79		7	

TABLE B		
LEAD		POS—, AC— RELAY
T (TENS)	U (UNITS)	MAKE CONTACT
2		1
3		2
4		3
5		4
6		5
7		6
	0	7
	1	8
	2	9
	3	10
	4	11
	5	12
	6	13
	7	14
	8	15
	9	16

WARNING

When checking for DSS key ground to make contact(s) of AC— *relay, avoid shorts, grounds, or crosses which might cause excess current to damage reeds of* UD, TD *relays, via fixed contacts of* AC— *relay. Use 716C receiver (or equivalent) to make test*

NOTE 4

If called station is 42, FIG. 4 and TABLE B show ground should extend from operated attendant console DSS key 42 (tens digit 4, units digit 2) to contacts 3M and 9M of both POS— and AC— relays of the seized dial pulse register.

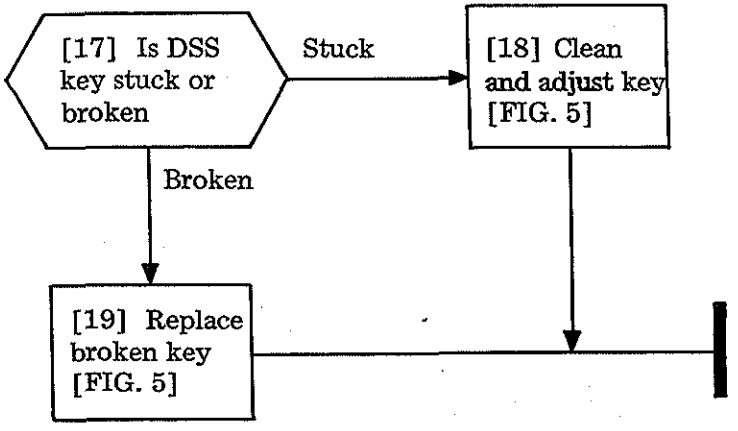
[17] Is DSS key stuck or broken
Stuck
[18] Clean and adjust key [FIG. 5]
Broken
[19] Replace broken key [FIG. 5]

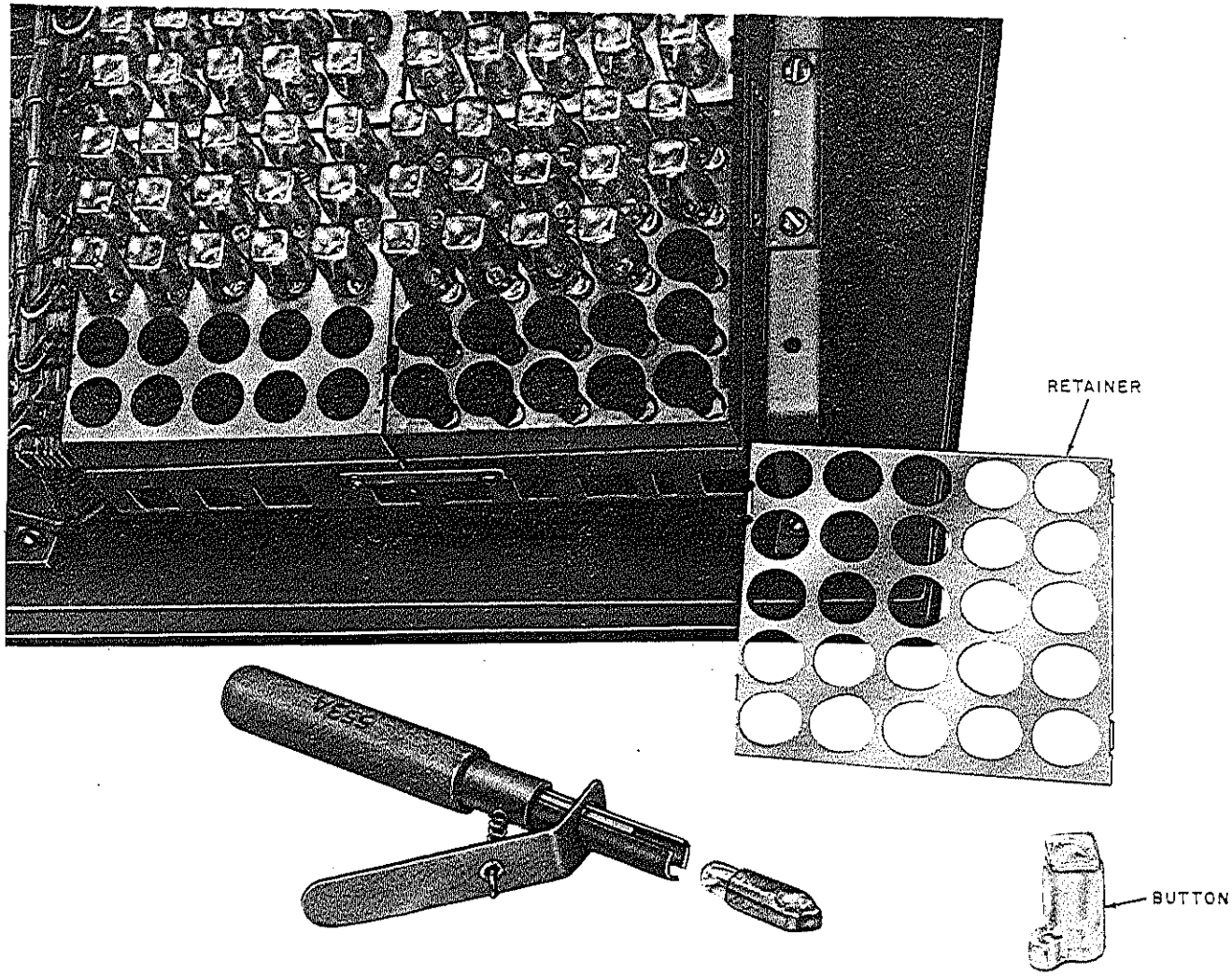

FIG. 5 — Typical DSS Key Block Assembly

[1] Place call from test station to attendant

[2] At attendant position, place incoming call on hold and place CO trunk call (ie, to test desk)

AND

Attendant to CO conversation satisfactory

[3] Operate DIAL BACK key

[4] Dial test station number

AND

[5] Does CO connect to PBX station

Yes → Dial back feature operates

No

[6] Does NT relay in cordless position circuit (slide 5) operate when dial back key operated

Yes → [7] Check operate path of NT relay (marker circuit) through CO trunk [FIG. 1]

No

[8] Does dial back key provide good ground to 1U of NT relay (cordless position circuit) when operated

Yes → [9] Check coil and battery required to operate NT relay in cordless position circuit

No → [10] Check ground through dial back key [FIG. 1]

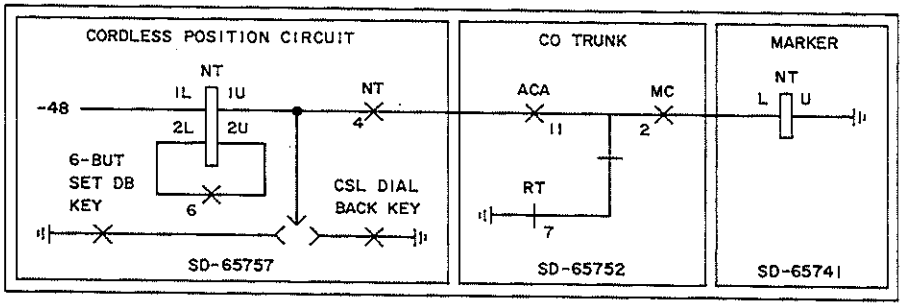

FIG. 1

CLEAR ATTENDANT DIAL BACK TROUBLE

SUMMARY

Initiate and advance an incoming CO trunk call(s) to the point of failure. From the attendant console, attempt to transfer the call as follows:

- Operate **HOLD** key, to hold calling party and get PBX dial tone.
- Call (dial or direct station select) idle station.
- Release attendant console from connection (via **RLS** key).

Verify CO trunk-to-station connection is established. Identify the CO trunk equipment unit seized by observing operation and release of **R1** relay (slide 5), which follows ringing cycle, or by observing the flashing CO TRK (0/9) lamp of the make-busy and busy display unit (top of slide 2), if provided. Refer to FIG. 1 to locate both cordless position and CO trunk circuit relays.

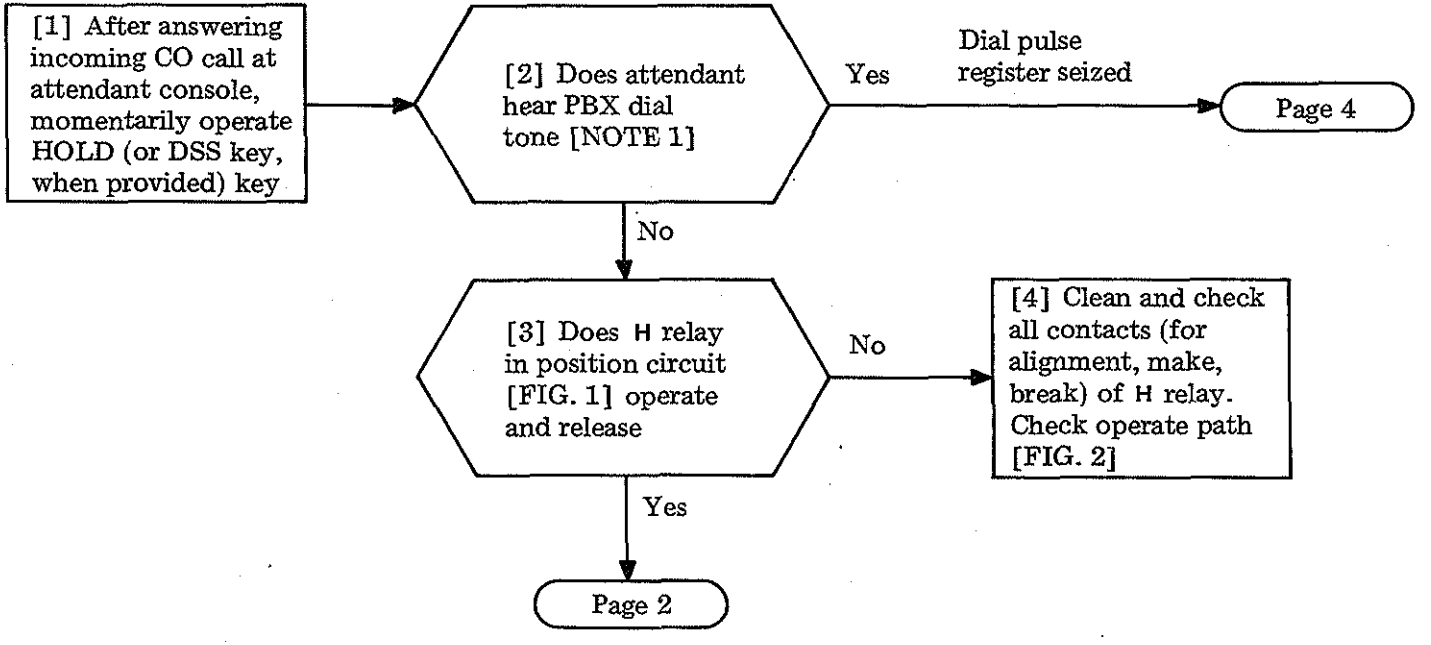

NOTE 1
If attendant console is arranged for DSS, PBX dial tone is heard momentarily (during transfer)

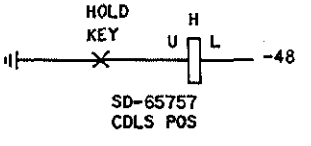

FIG. 2

INDICATION OF CAMP-ON UNIT	
ATND TRUNK 2	
ATND TRUNK 1	
ATND TRUNK 0	
CO TRUNK OR RINGDOWN TIE TRK	9
POS CKT AND TRK PTCH	
CO TRUNK OR RINGDOWN TIE TRK	8
CO TRUNK	7
CO TRUNK	6
CO TRUNK	5
CO TRUNK OR RINGDOWN TIE TRK	4
POS CKT AND TRK PATCH	
CO TRUNK OR RINGDOWN TIE TRK	3
CO TRUNK	2
CO TRUNK	1
CO TRUNK	0

SLIDE 5

FIG. 1

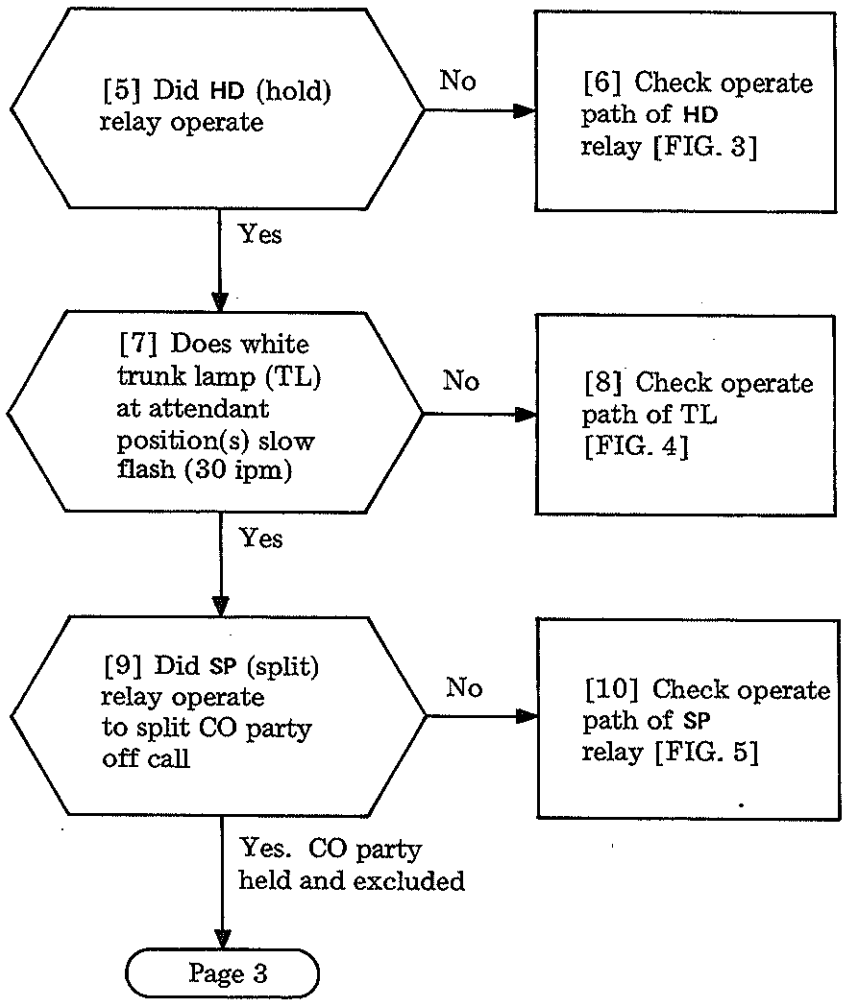

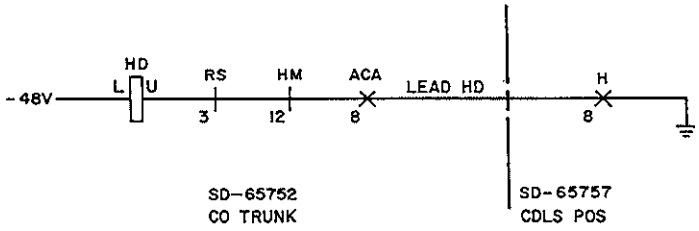

FIG. 3

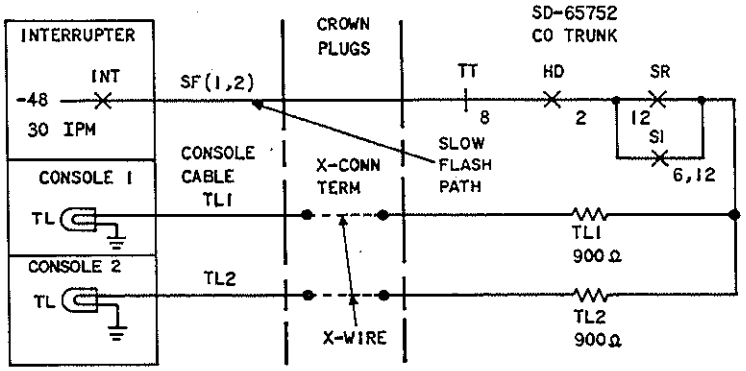

FIG. 4

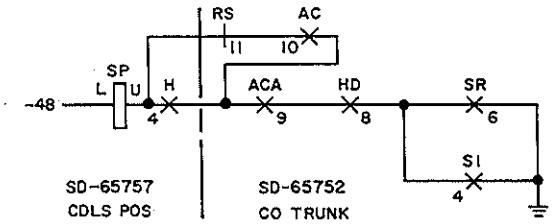

FIG. 5

CLEAR ATTENDANT TRANSFER TROUBLE (SD-65752)

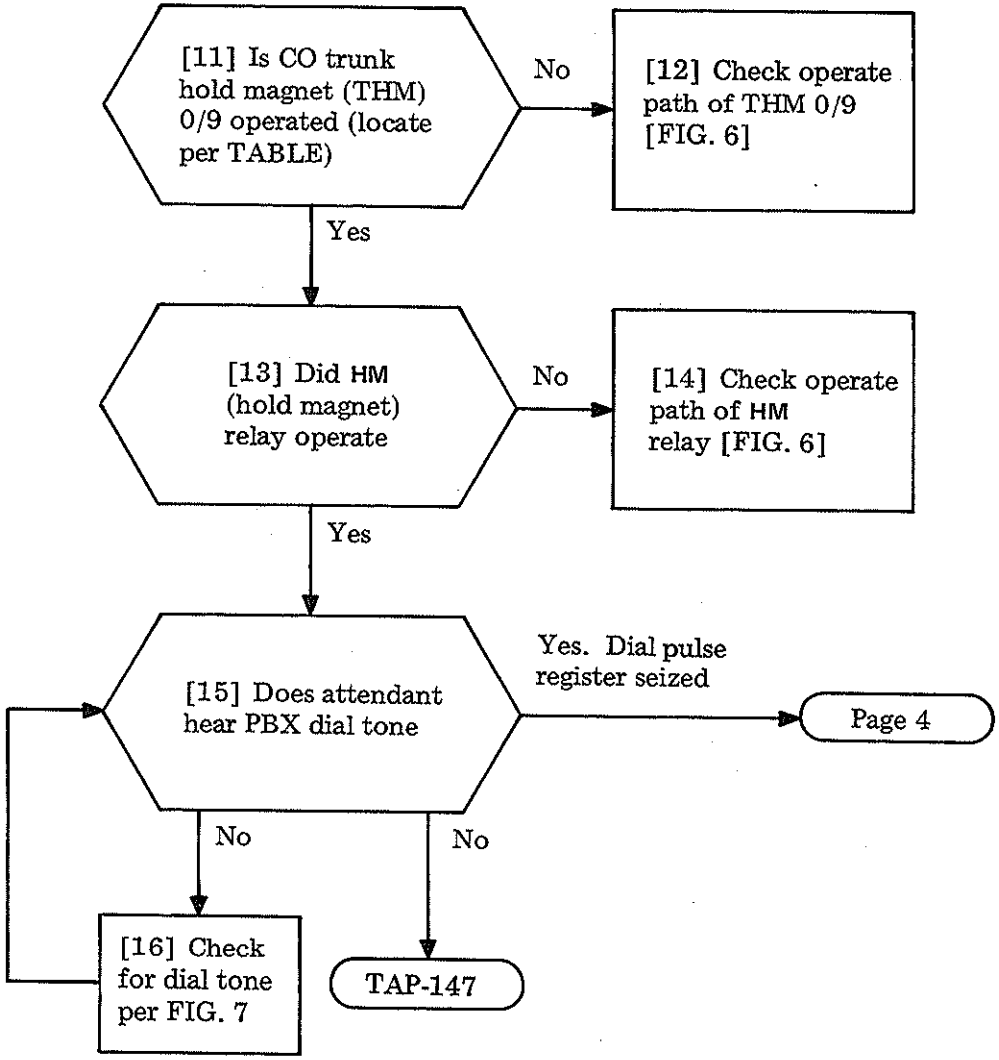

TABLE			
CO TRK	THM LOC		
	SLIDE	SW	VERT
0	4	0	0
1			1
2			2
3			3
4			4
5		8	5
6			6
7			7
8			8
9			9

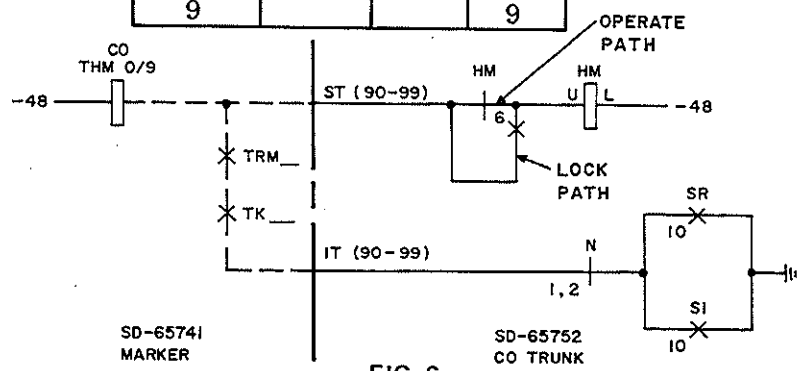

FIG. 6

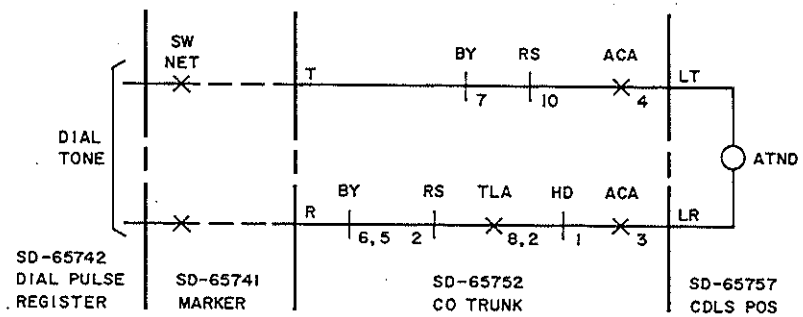

FIG. 7

CLEAR ATTENDANT TRANSFER TROUBLE (SD-65752)

[17] From attendant console, call (dial or direct station select) idle station

[18] Is ringer heard at called station

Yes → Path through switching network connected → Page 5 Step 31

No

[19] Does P relay operate and release

No → [20] Check operate path of P relay [FIG. 8]

Yes

[21] Does MC (marker connect) relay operate and release

No → [22] Check operate path of MC relay [FIG. 9]

Yes [NOTE 2]

[23] Did TT (trunk terminating) relay lock operated

No → [24] Check operate, lock path(s) of TT relay [FIG. 10]

Yes → Page 5

NOTE 2
Do Steps 23 and 24 if call is to tie trunk; otherwise go to Page 5

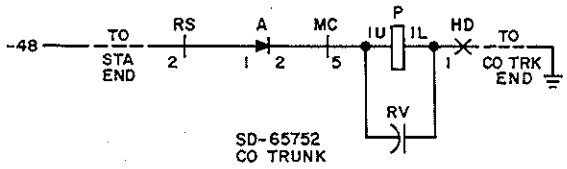

FIG. 8

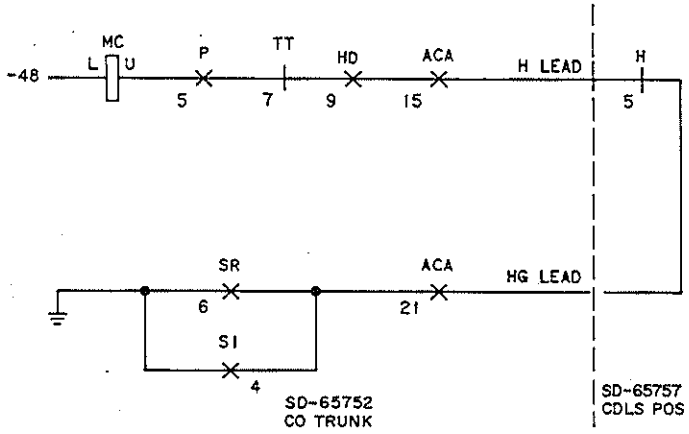

FIG. 9

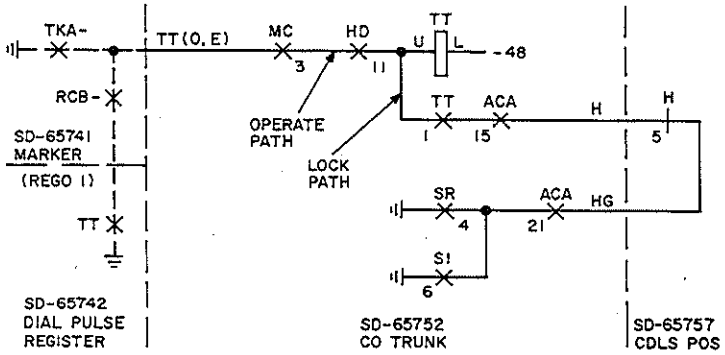

FIG. 10

CLEAR ATTENDANT TRANSFER TROUBLE (SD-65752)

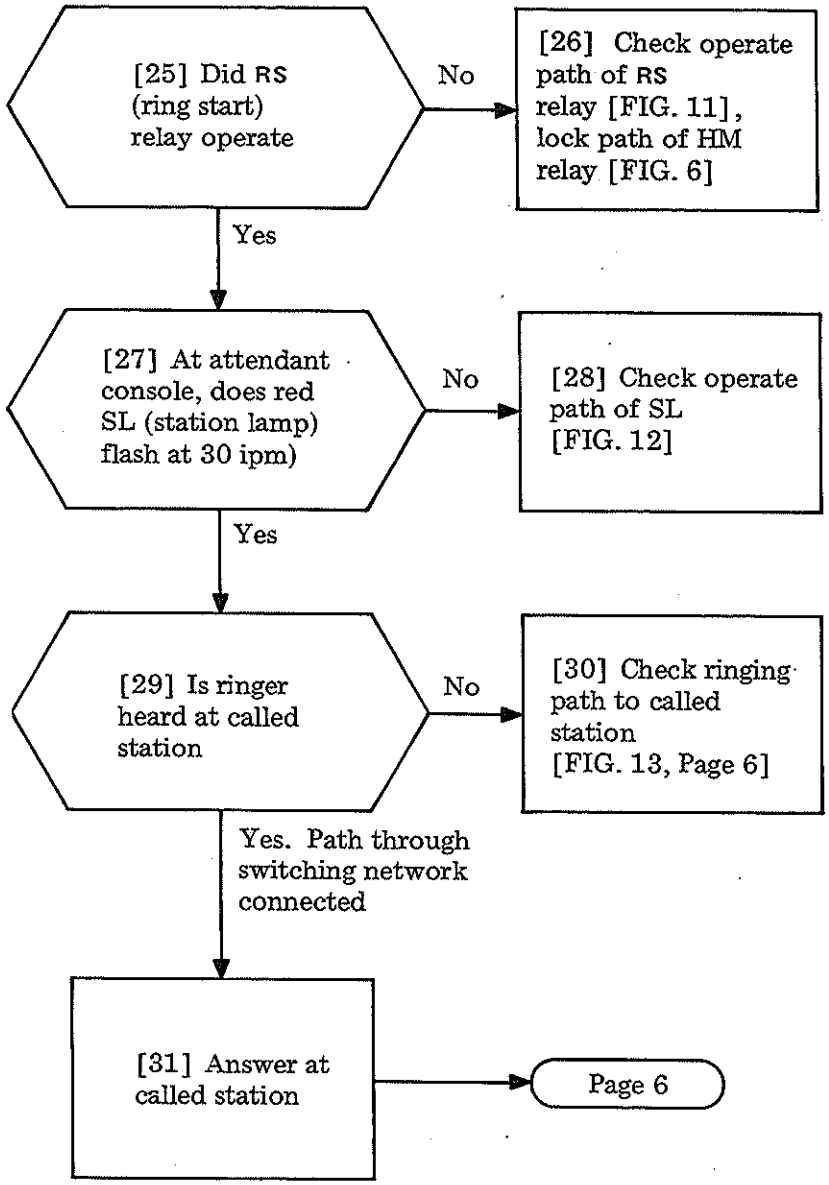

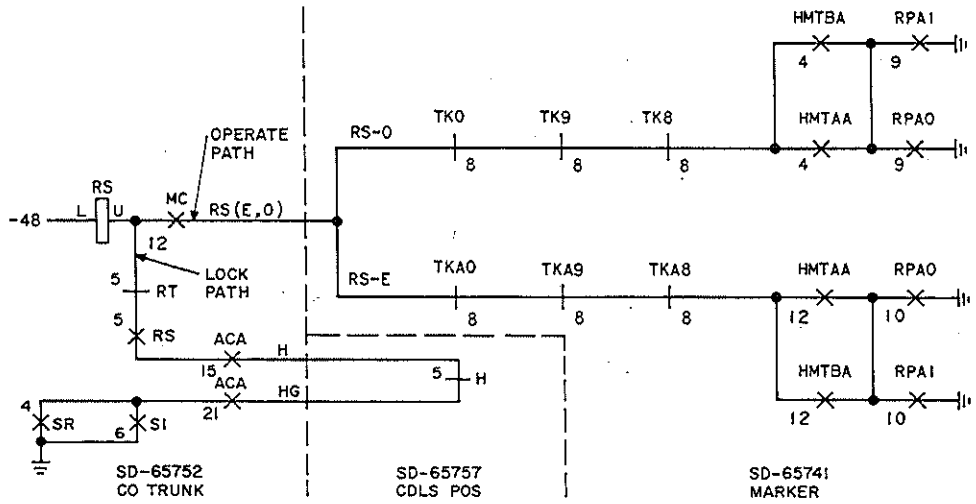

FIG. 11

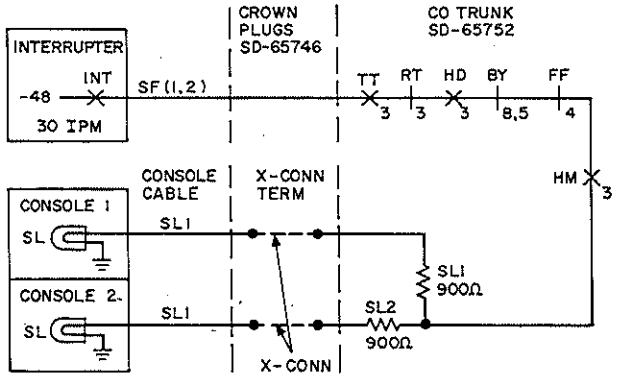

FIG. 12

CLEAR ATTENDANT TRANSFER TROUBLE (SD-65752)

[32] Did RT (ring trip) relay operate when called station answered

No → [33] Check operate path of RT relay [FIG. 13]

Yes ↓

[34] Is conversation satisfactory between attendant and called station

No → [35] Check talk path [FIG. 14]

Yes. CO party still excluded ↓

[36] At attendant console(s), is SL steady

No → [37] Check operate path of steady SL [FIG. 15]

Yes ↓

Page 7

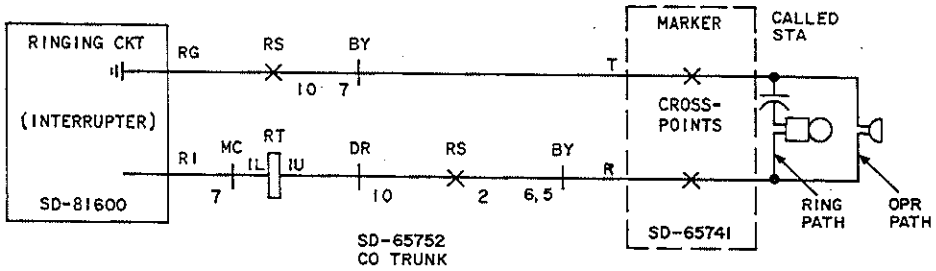

FIG. 13

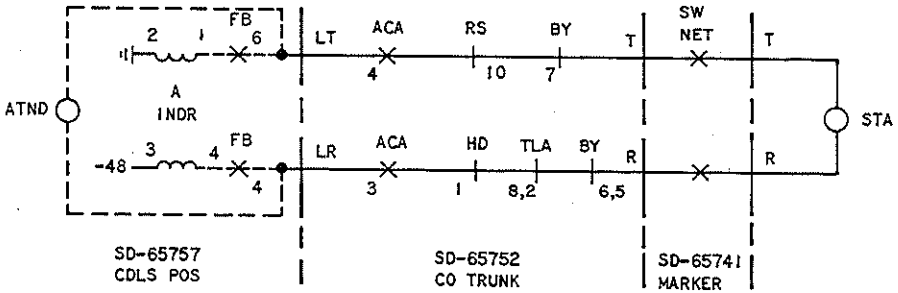

FIG. 14

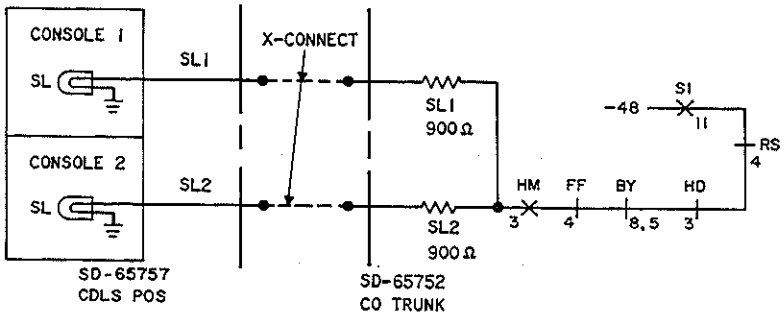

FIG. 15

CLEAR ATTENDANT TRANSFER TROUBLE (SD-65752)

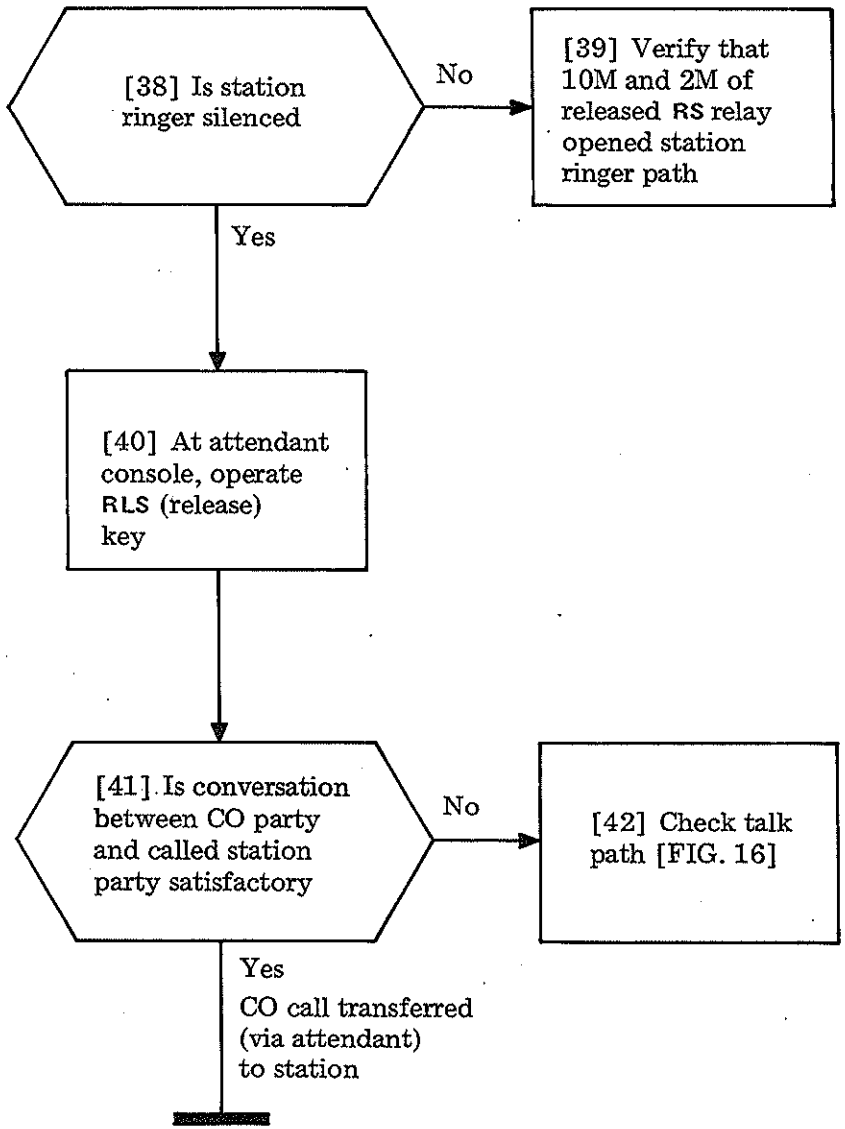

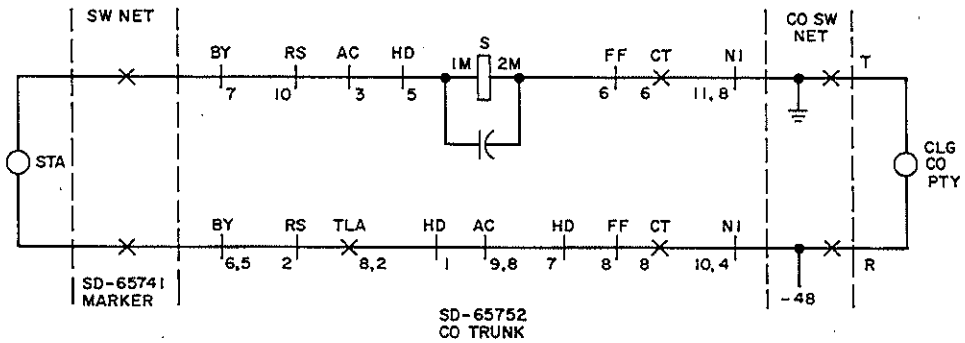

FIG. 16

CLEAR ATTENDANT TRANSFER TROUBLE (SD-65752)

SUMMARY

Initiate an attendant-to-station call via the attendant trunk in trouble. When the call is answered, hold the call at the attendant console, then reenter the held call. If a failure occurs, locate the fault using the figure or other reference given in this procedure. Operation of relays may be observed at the attendant trunk units (0-2) located at the top of slide 5, mounting plate Y, Z, or AA. Cordless position circuit relays are on slide 5, mounting plate V. Dial pulse registers (0, 1) are on slide 6, mounting plates A-F.

[1] Establish an attendant-to-station call via the attendant trunk in trouble

→ [2] Momentarily operate the **HOLD** key

→ [3] Operate the release (**RLS**) key, then reoperate the same attendant trunk key

→ [4] Is trouble attendant can't hold or can't reenter held call

- Can't reenter → Page 2 step 13
- Can't hold → [5] After repeating steps 1 and 2, does H relay operate and release
  - No → [6] Check operate path of H relay [FIG. 1]
  - Yes → Page 2

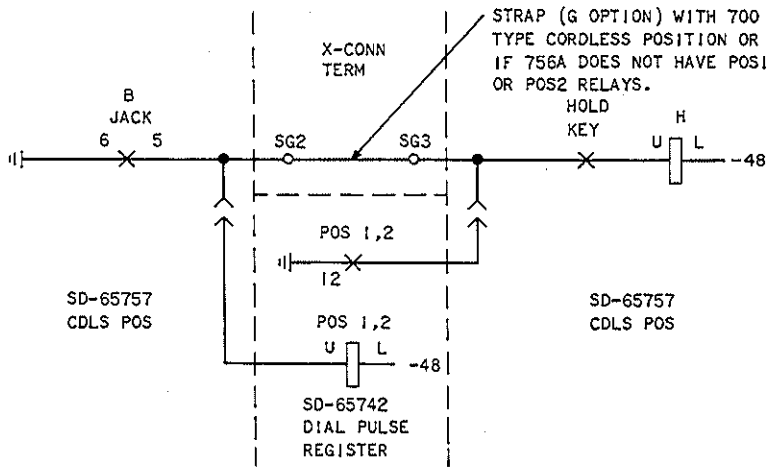

FIG. 1

CLEAR ATTENDANT TRUNK TO STATION HOLD TROUBLE (SD-65753)

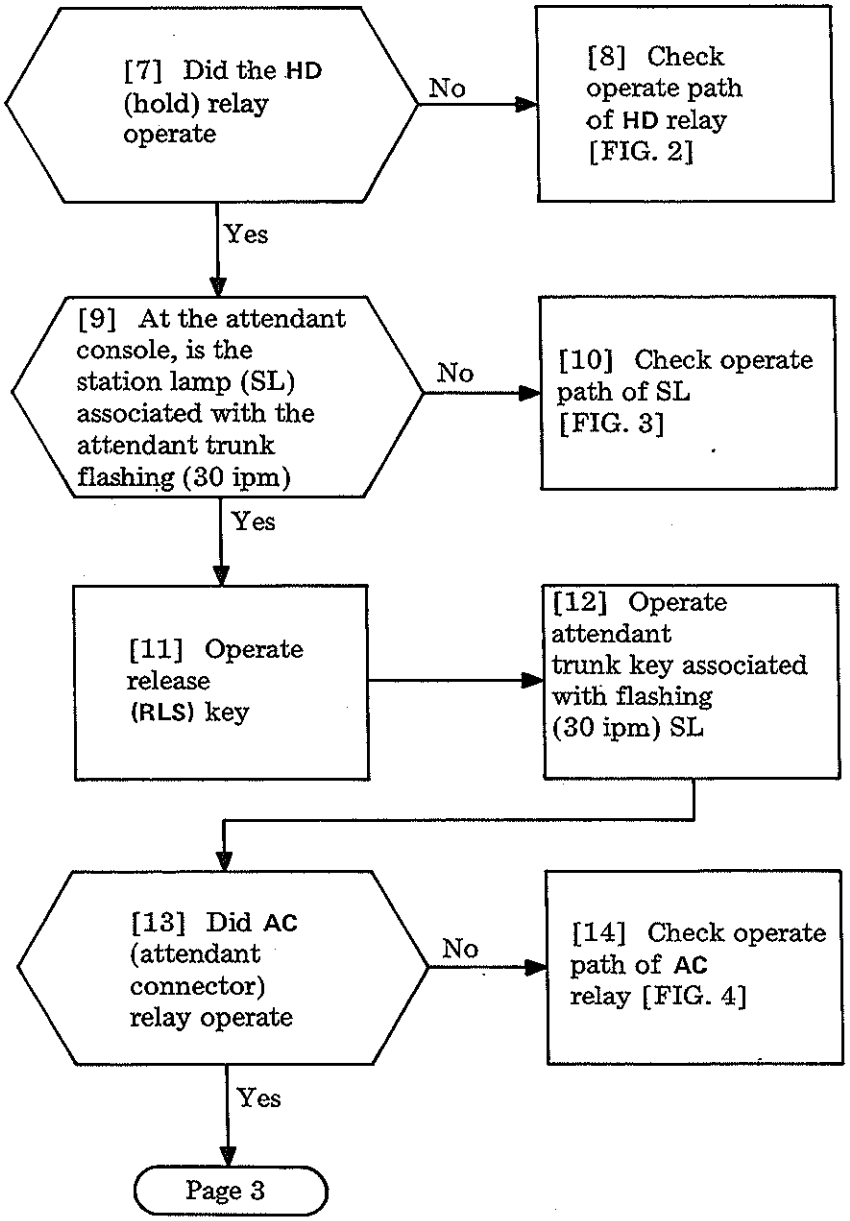

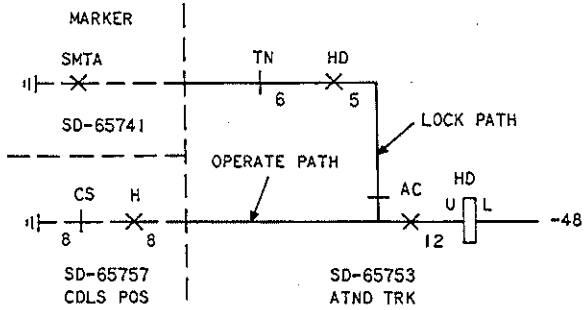

FIG. 2

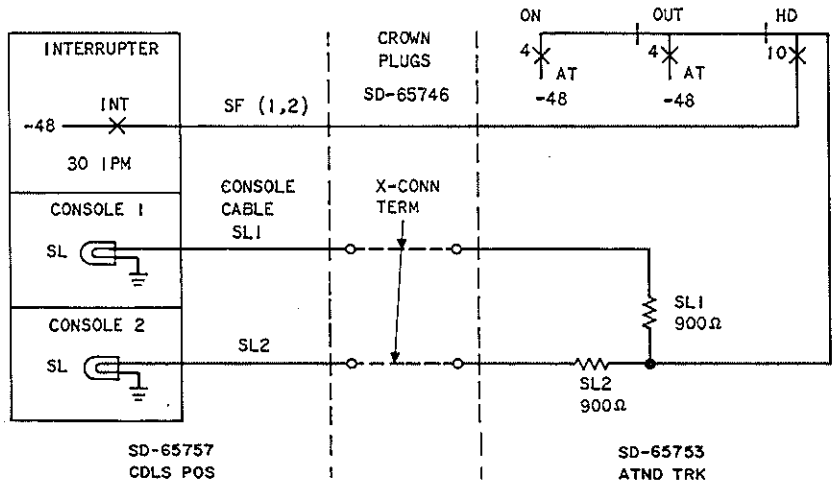

FIG. 3

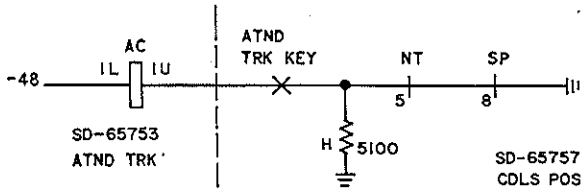

FIG. 4

Issue 1	May 1975
551-100-101	TAP
PAGE 2 of 3	132

CLEAR ATTENDANT TRUNK TO STATION HOLD TROUBLE (SD-65753)

[15] Did **HD** relay release

No → [16] Check that contact 12B of **AC** relay opened **HD** relay lock path [FIG. 2]

Yes ↓

[17] Did **ON** relay operate

No → [18] Check operate path of **ON** relay [FIG. 5]

Yes ↓

[19] Is SL steadily lighted

No → [20] Check contact 4M of operated **ON** relay [FIG. 3]

Yes ↓

[21] Is conversation satisfactory

No → [22] Check talk path between attendant and called party [FIG. 6]

Yes → [23] All parties disconnect

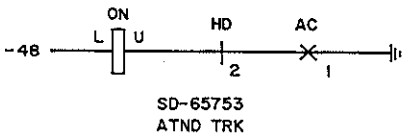

FIG. 5

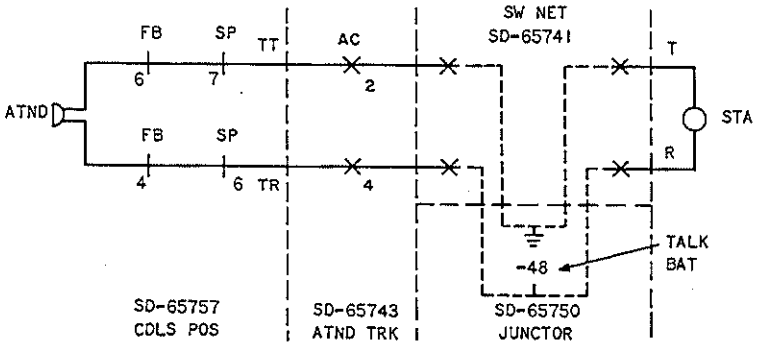

FIG. 6

CLEAR ATTENDANT TRUNK TO STATION HOLD TROUBLE (SD-65753)

SUMMARY

Establish a station-to-station call, leaving both handsets off-hook. At slide 2, connect test clips of dial hand test set to terminals of test station 39. At slide 4, crossbar switch 0, prepare to observe operation of trunk hold magnet (THM) 7. With dial hand test set switch in TALK position, dial code of one of the busy stations. Listen for busy tone and check to see if THM 7 operated to close the cross-points of the vertical. If busy tone is not heard, or if THM 7 does not operate, use this procedure to locate the trouble. This procedure assumes no alarms, and when a station placed a call to a busy station, the busy tone trunk failed to return busy tone.

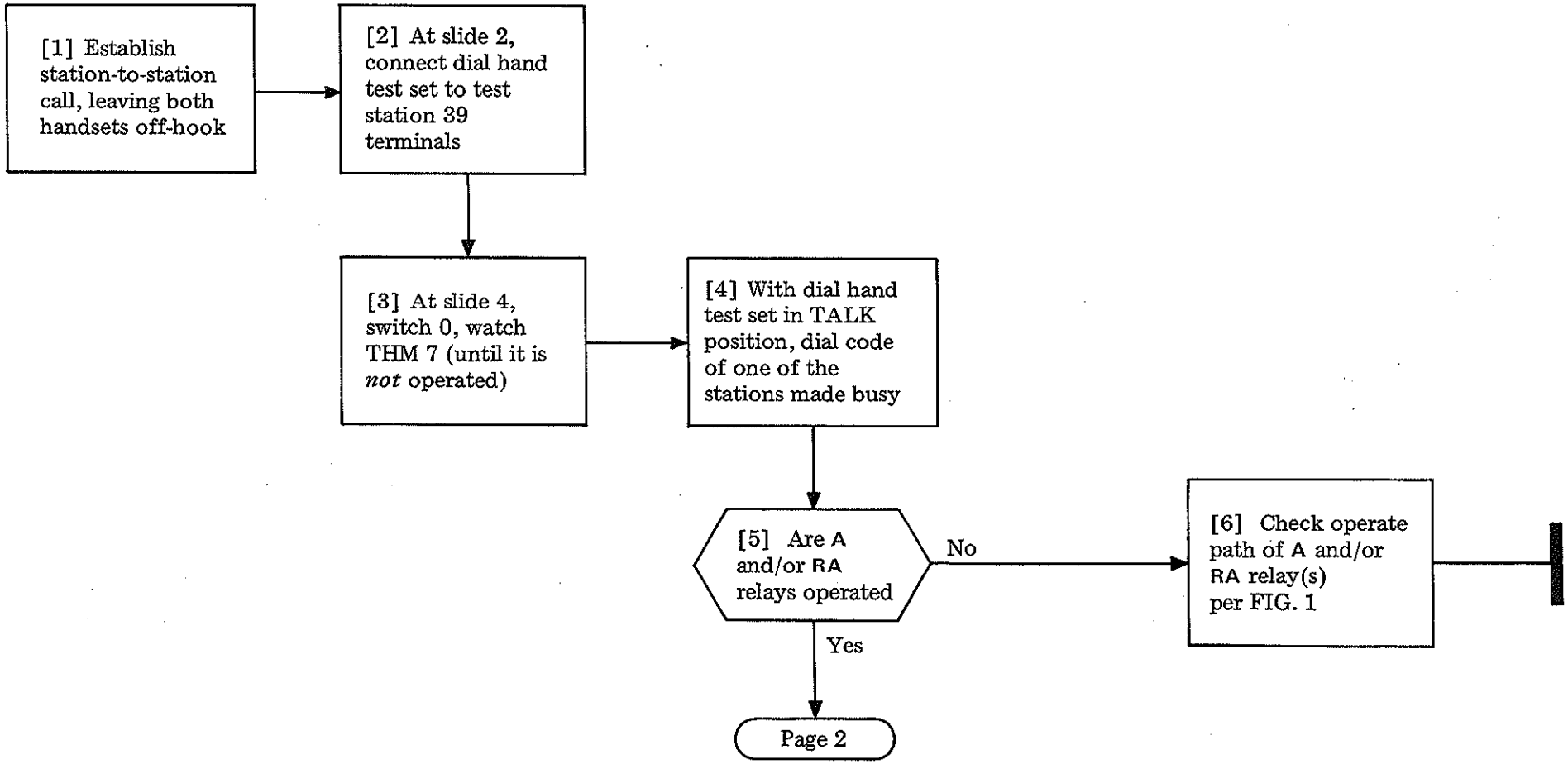

CLEAR BUSY TONE TRUNK TROUBLE (SD-65754)

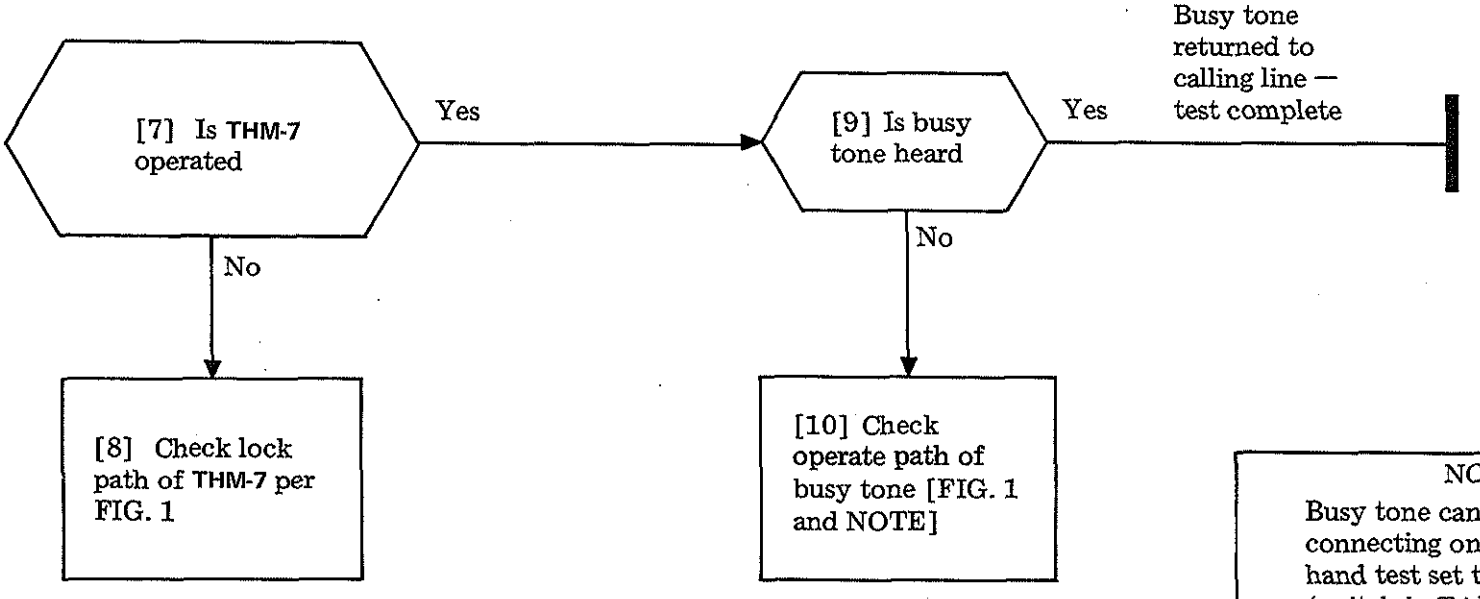

NOTE

Busy tone can be checked by connecting one clip of dial hand test set to ground, (switch in TALK position), and touching the other clip to each component in the busy tone path, until the fault is isolated (by listening) [FIG. 1]

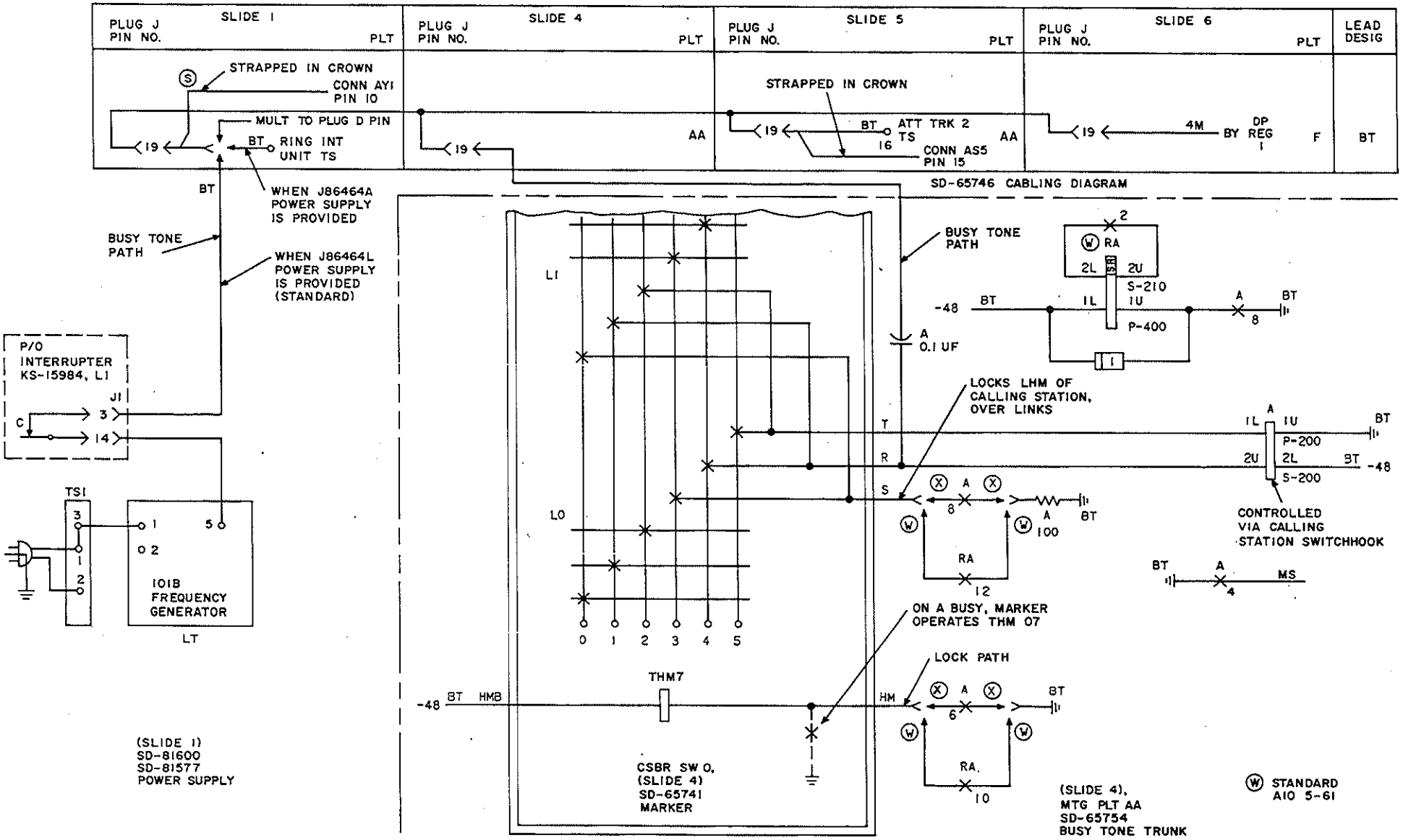

FIG. 1

Issue 1	May 1975
551-100-101	TAP
Page 3 of 3	133

CLEAR BUSY TONE TRUNK TROUBLE (SD-65754)

[1] See NOTE. Connect test handset to test station (STA 39, slide 2) with switch set to MON

[2] Place call from console to test station using ATND TRK 0 or 1

[3] Set handset switch to TALK

[4] At console, depress HOLD key

Conversation normal

AND

[5] Operate ATND TRK 2 pickup key

[6] Operate DIAL BACK key

AND

[7] Second dial tone heard

Yes → Page 2

No

[8] Is relay BV operated at slide 4AB

Yes → [9] See FIG. 1. Check MKBV relay and HM-3 make contacts to clear trouble

No → [10] See FIG. 1. Check operate path of relays ST and BV at slide 4AB. Check operation of relays ON and AC at 5AA. Make necessary repairs.

[11] Verify repair by repeating test

NOTE
This procedure requires two persons or a test console located at the equipment cabinet

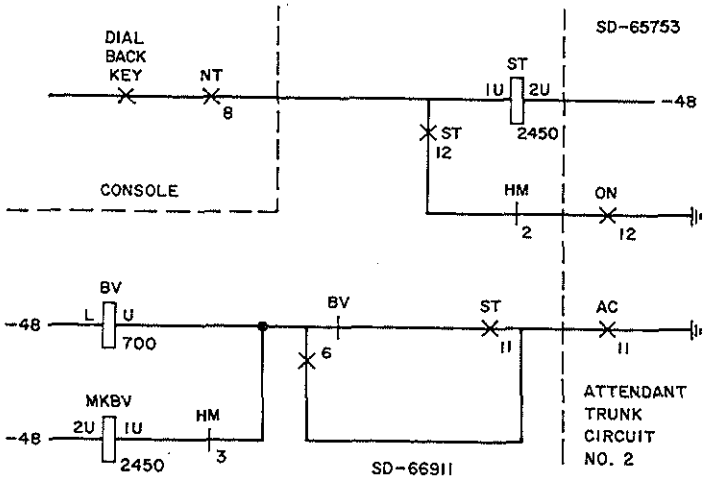

FIG. 1

CLEAR BUSY VERIFICATION TRUNK TROUBLE

[12] Place call to busy test station

[13] Is busy verification (BV) tone satisfactory

Yes → [23] Is conversation satisfactory

Yes → ▮

No → [24] Check talk path using FIG. 3 → ▮

No → [14] Is BV trunk equipped with 402 tone generator

No → [13]

Yes → [15] Is proper voltage (48Vdc) across terminals 1 and 2 of tone generator

Yes → [17] Use test handset to check for BV tone at terminals 3 and 4 of tone generator

No → [16] Check BV 7-make contact to ground. Clear trouble and return to step 13

[18] Is BV tone satisfactory

Yes → [20] Did BVT relay operate (slide 4AB)

Yes → [22] Check BVT contacts 1-make and 5-make to clear trouble. Return to step 13

No → [19] Repair or replace defective tone generator. Verify repair by repeating step 1 through 13

No → [21] Check operate path of BVT relay [FIG. 2]. Clear trouble and return to step 13

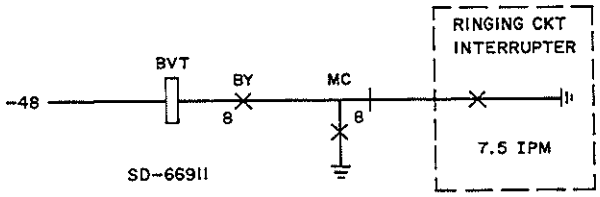

FIG. 2

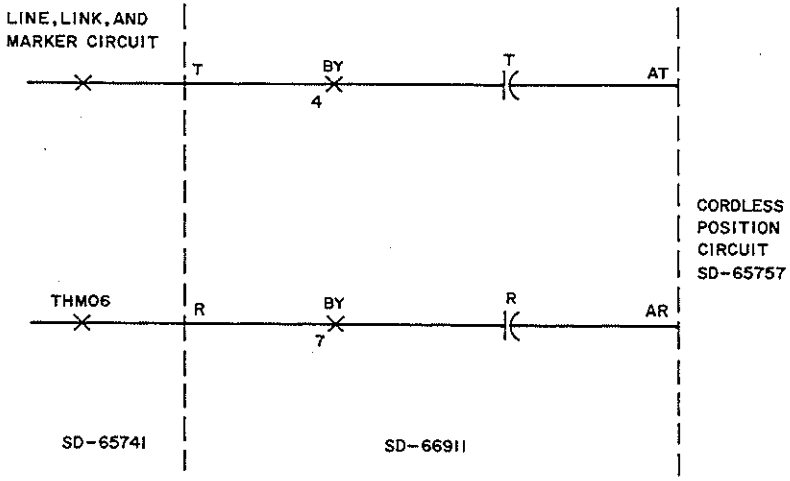

FIG. 3

CLEAR BUSY VERIFICATION TRUNK TROUBLE

SUMMARY

Locate the external cabinet housing the J58829AG-1 station dial transfer (SDT) equipment. Initiate a call from the local test desk (party A). Use CO trunk associated with trouble, if one can be identified. After connecting the call to test station 39 (station B — NOTE 2), the attendant must release from the connection. Observe relay operation during call progress.

At station B:

- Flash switchhook to get transfer (steady) PBX dial tone
- Dial station C
- Talk privately (on answer) with C (consultation hold)
- Flash switchhook again to connect party A (add-on)
- Hang up (completing call transfer — individual).

This procedure assumes: trunk call is made via CO trunk 0, no fuse is blown [NOTE 1], and no marker or register trouble.

NOTE 1

SDT controller circuits stamped SD-66909-01, issue 6D or later are arranged with a 1 1/3 amp SDT fuse (earlier issues of the circuit shared a marker fuse) located at slide 1, mounting plate Y, next to the IR fuse. SDT trunk and SDT controller circuits (including crossbar switch 9) are externally mounted

NOTE 2

Two 500D telephone sets may be temporarily installed near SDT equipment cabinet. Connect one (station B) to test line 39. Connect the other (station C) to an unused line. Both lines must be assigned, unrestricted, and not in hunt group(s).

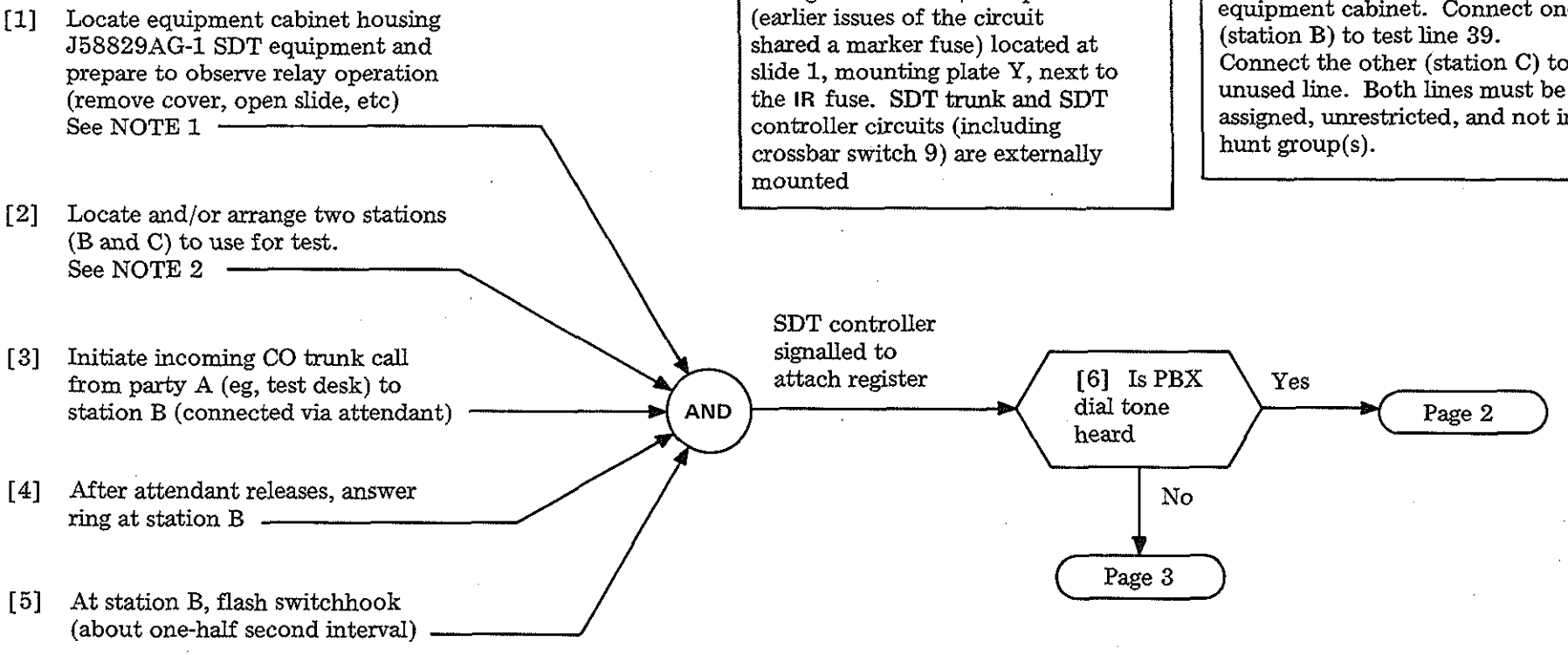

CLEAR CALL TRANSFER-INDIVIDUAL TROUBLE (WAS STATION DIAL TRANSFER)
(SD-66909, SD-66921)

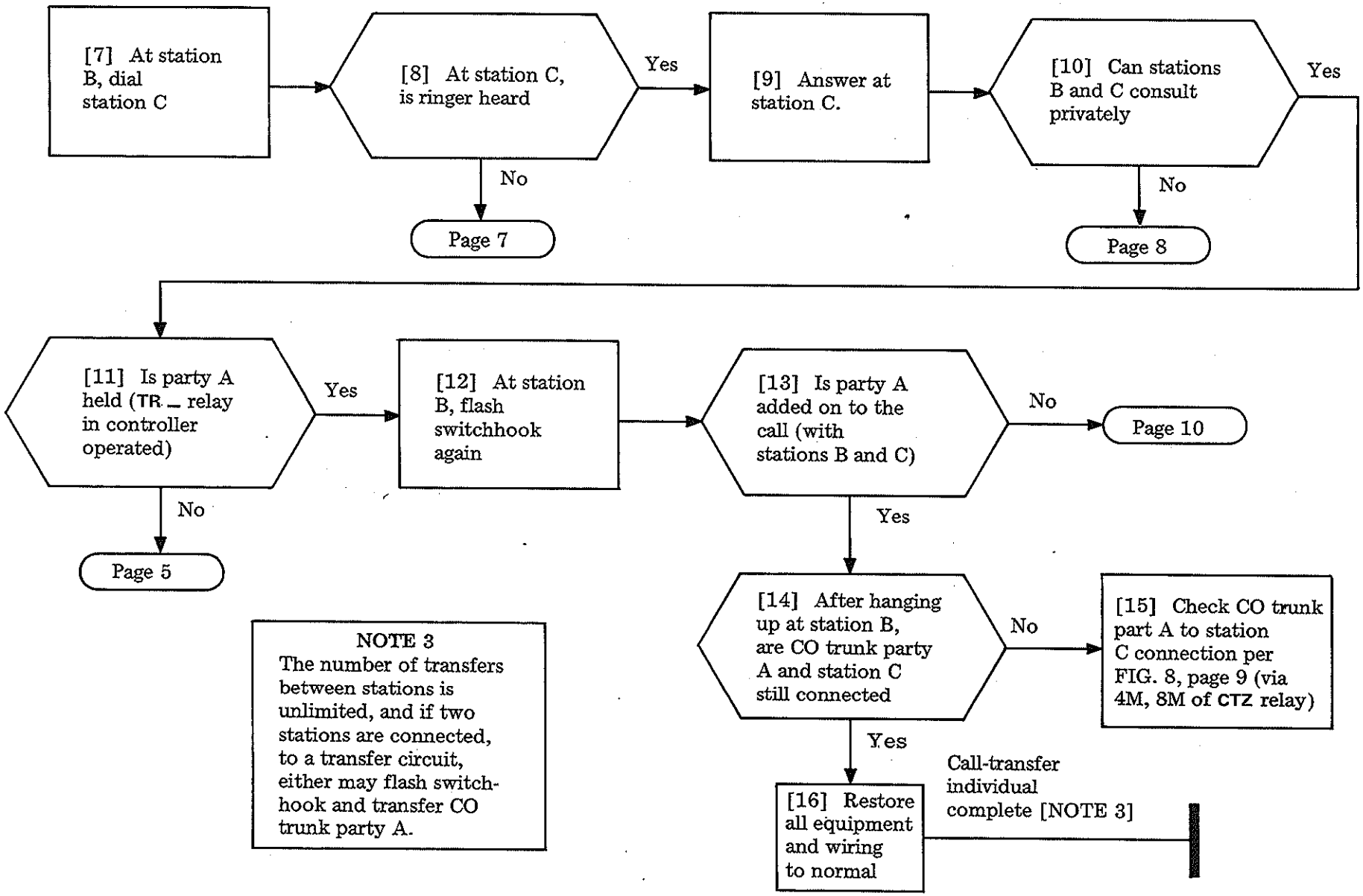

NOTE 3
The number of transfers between stations is unlimited, and if two stations are connected, to a transfer circuit, either may flash switchhook and transfer CO trunk party A.

CLEAR CALL TRANSFER-INDIVIDUAL TROUBLE (WAS STATION DIAL TRANSFER)
(SD-66909, SD-66921)

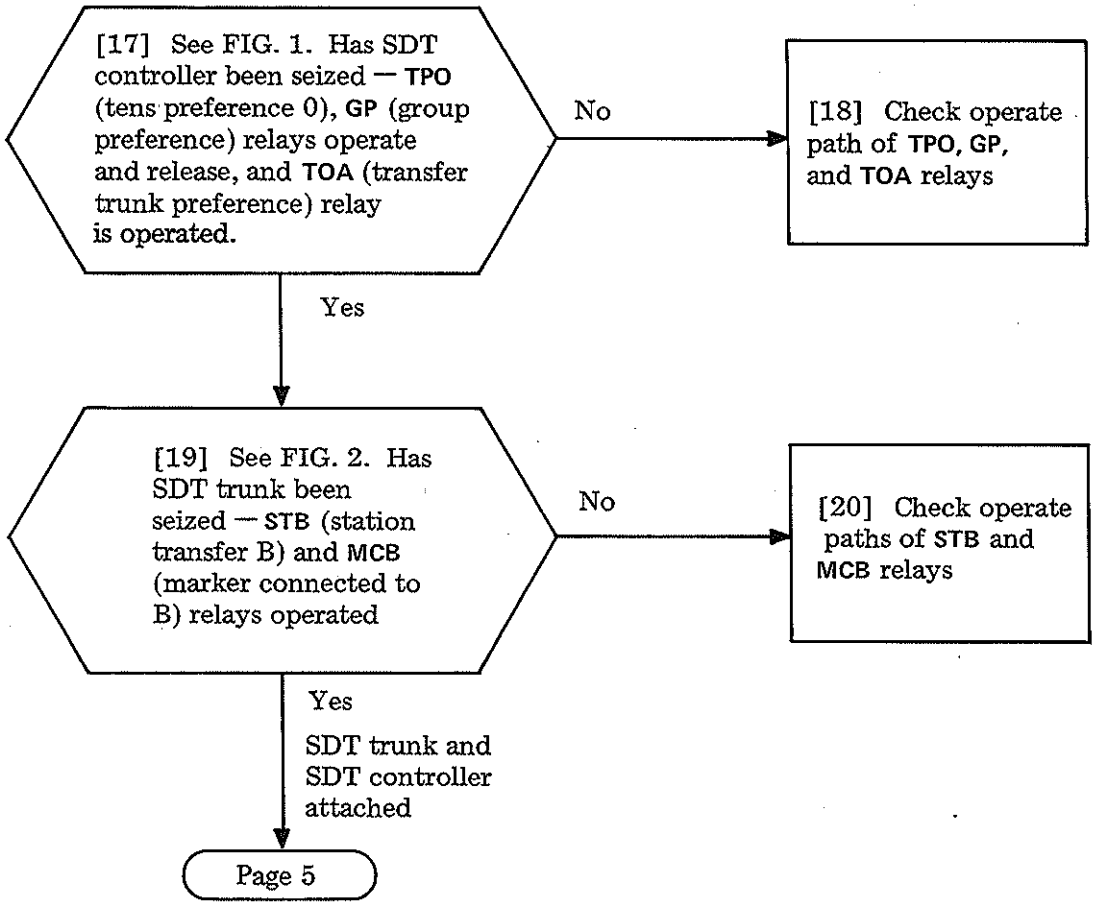

CLEAR CALL TRANSFER-INDIVIDUAL TROUBLE (WAS STATION DIAL TRANSFER)
(SD-66909, SD-66921)

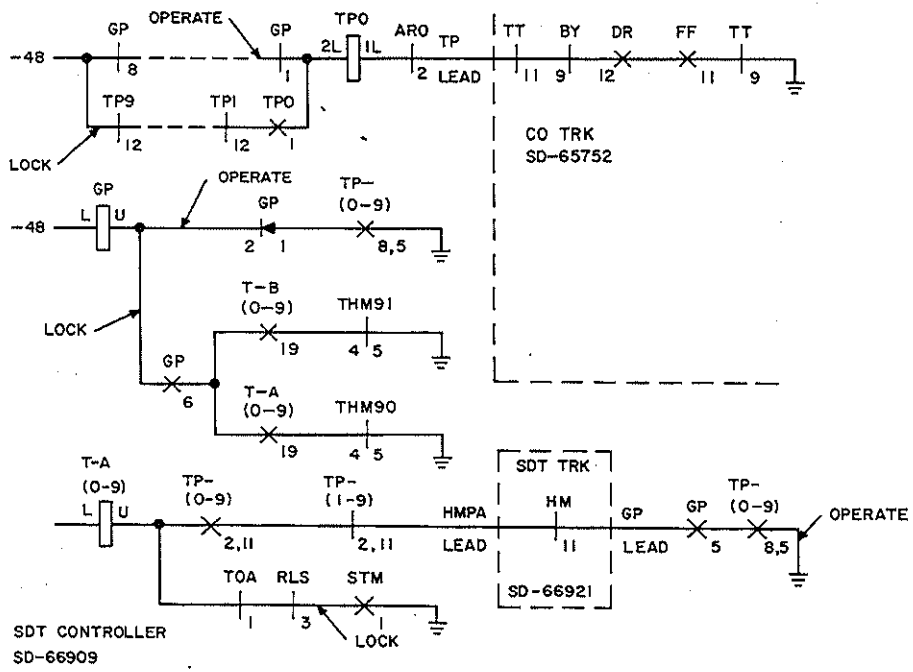

FIG. 1

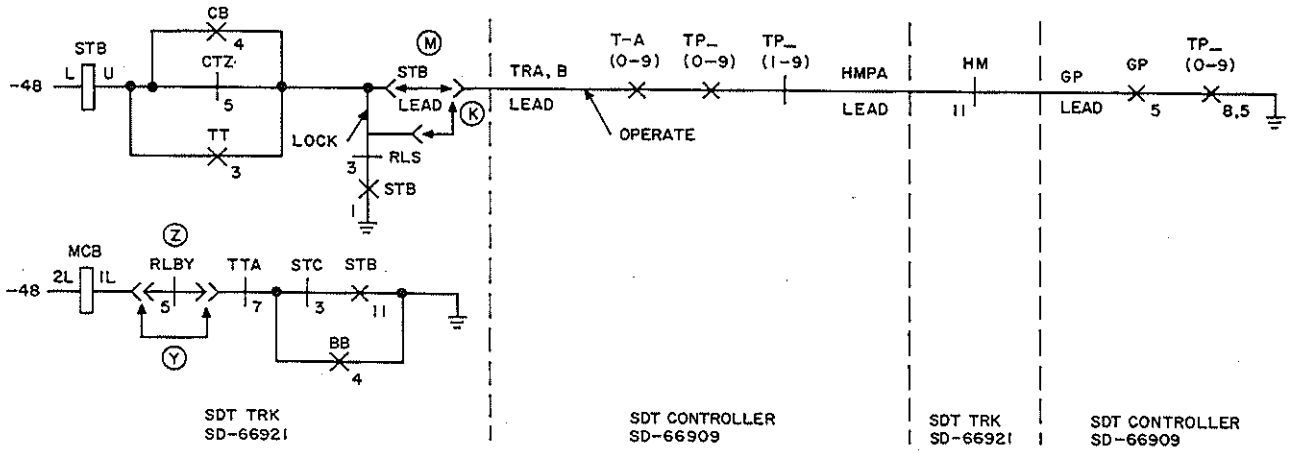

FIG. 2

CLEAR CALL TRANSFER-INDIVIDUAL TROUBLE (WAS STATION DIAL TRANSFER)
(SD-66909, SD-66921)

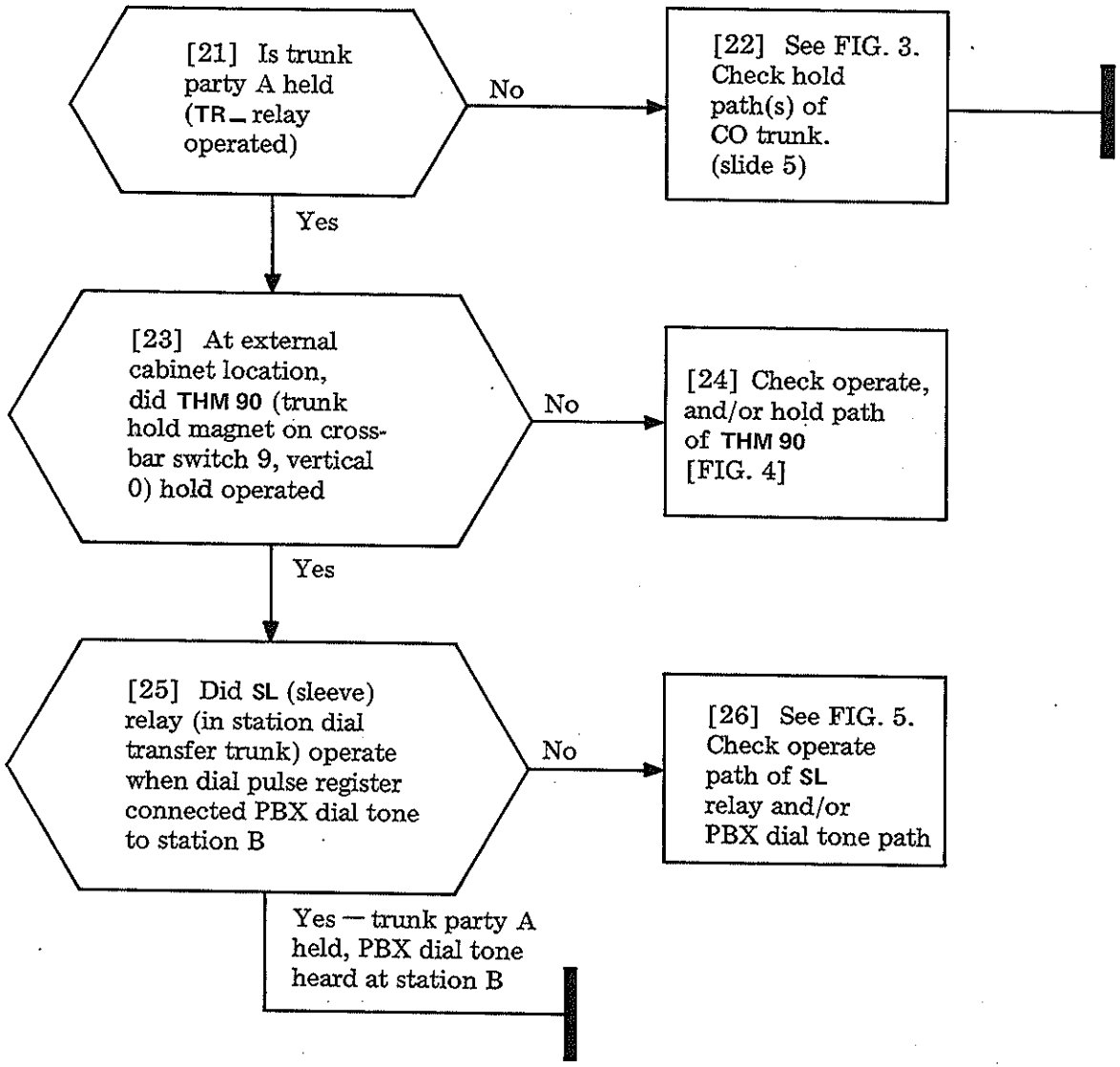

CLEAR CALL TRANSFER-INDIVIDUAL TROUBLE (WAS STATION DIAL TRANSFER)
(SD-66909, SD-66921)

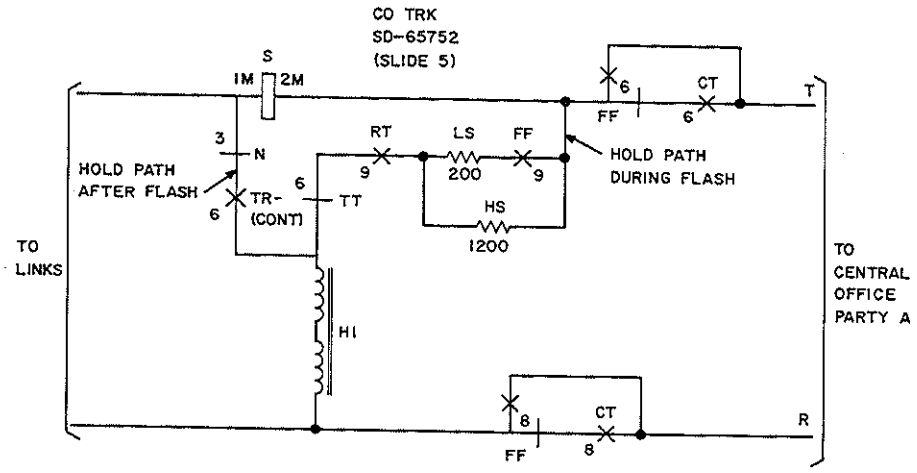

FIG. 3

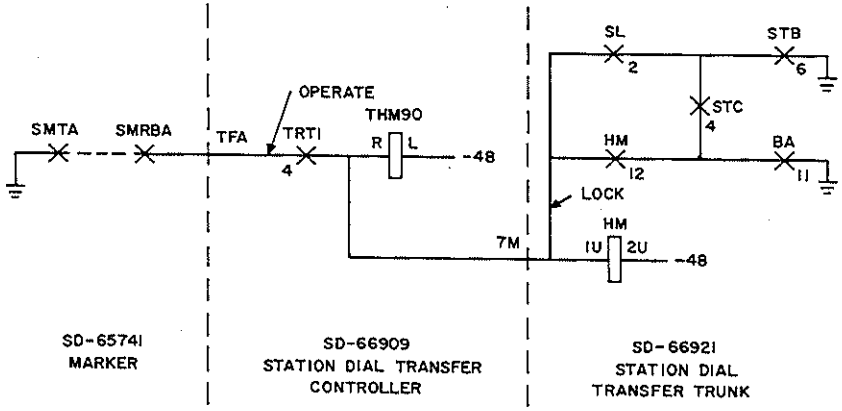

FIG. 4

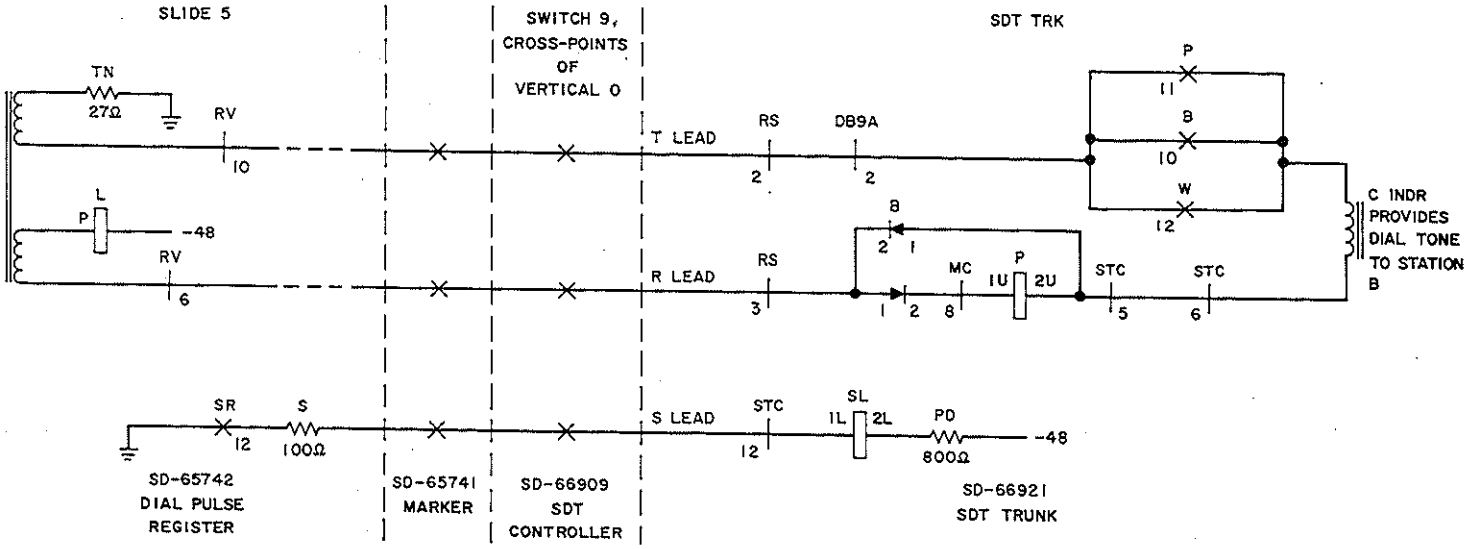

FIG. 5

CLEAR CALL TRANSFER-INDIVIDUAL TROUBLE (WAS STATION DIAL TRANSFER)
(SD-66909, SD-66921)

[27] Did call transfer to station C — relays RS (ring start), CTD (cut through to destination), and and STC (station transfer -C) operate

No → [28] See FIG. 6. Check operate path of RS, CTD, and/or STC relay(s)

Yes → [29] See FIG. 7. Check ringing path to station C ringer

Call transferred, station C ringer heard

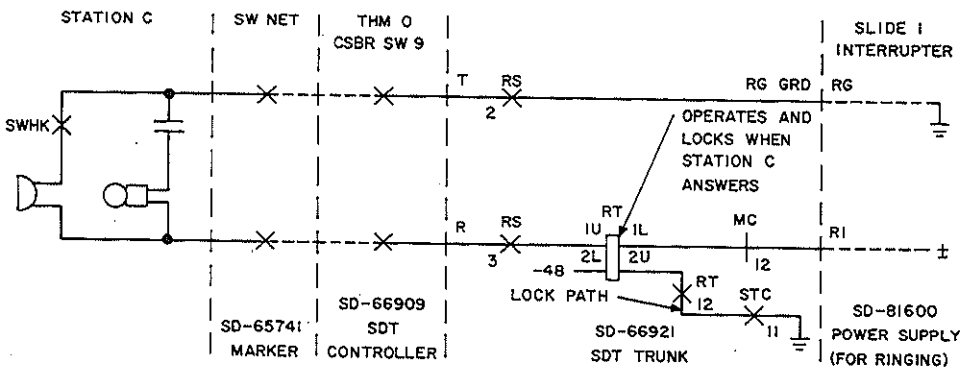

FIG. 7

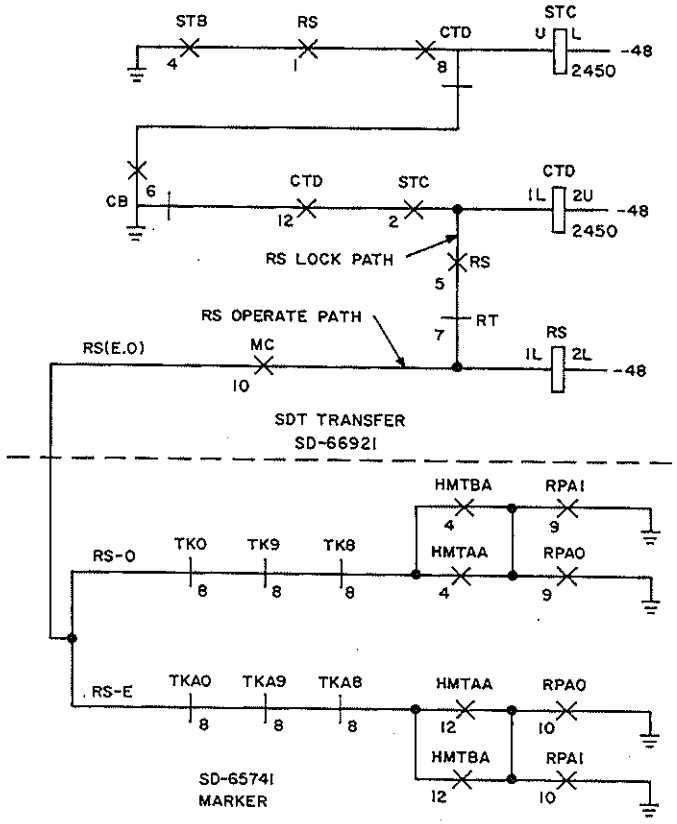

FIG. 6

CLEAR CALL TRANSFER-INDIVIDUAL TROUBLE (WAS STATION DIAL TRANSFER)
(SD-66909, SD-66921)

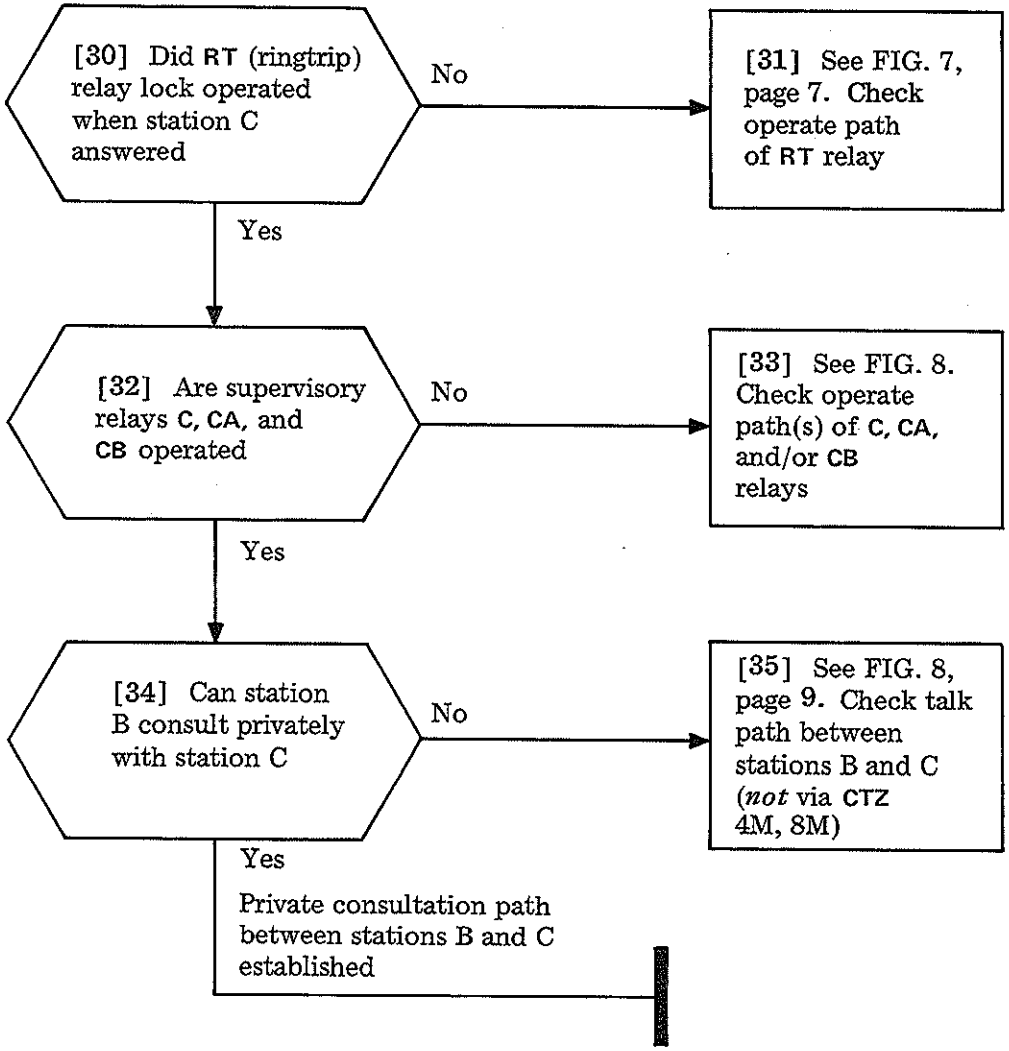

CLEAR CALL TRANSFER-INDIVIDUAL TROUBLE (WAS STATION DIAL TRANSFER)
(SD-66909, SD-66921)

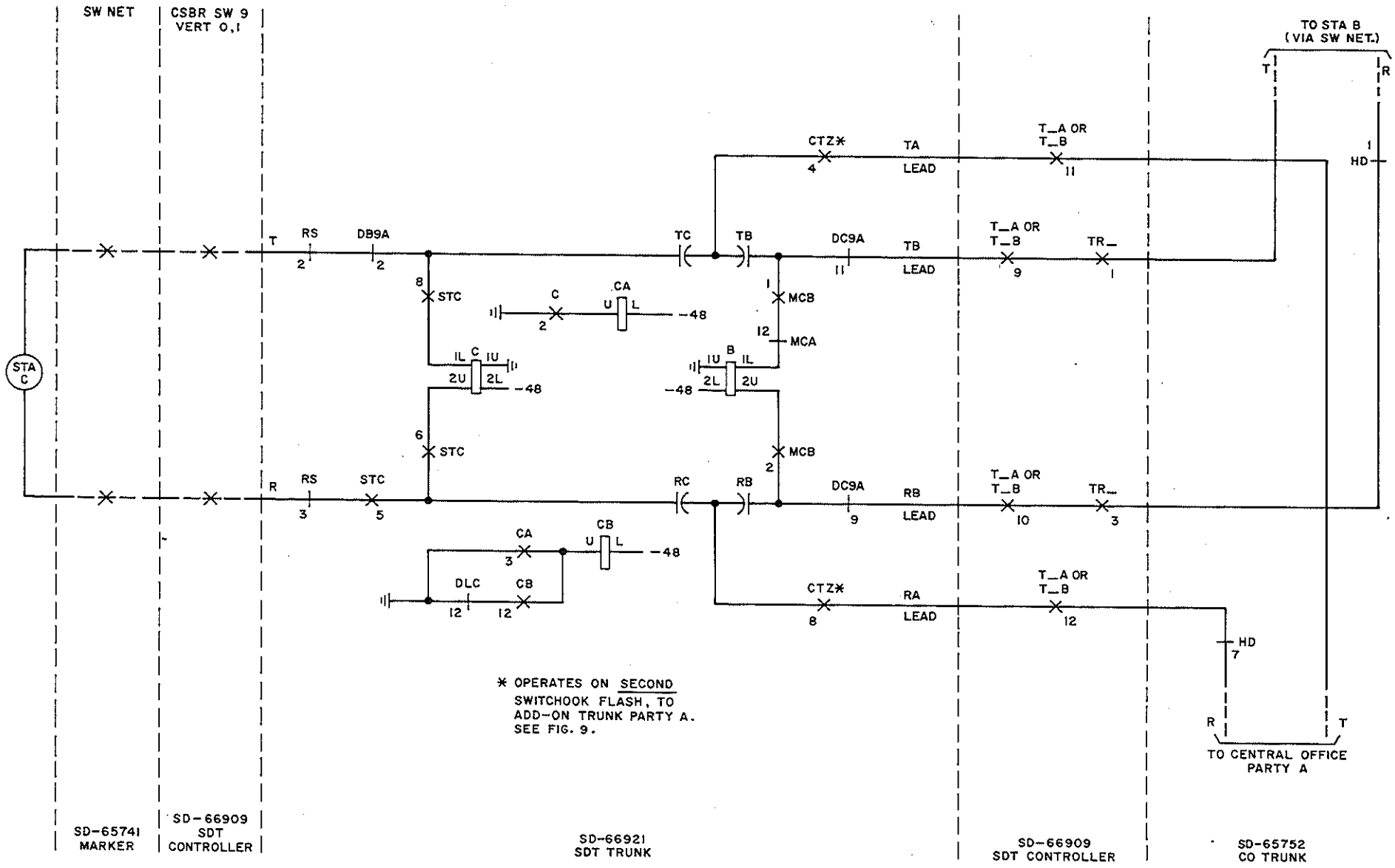

FIG. 8

CLEAR CALL TRANSFER-INDIVIDUAL TROUBLE (WAS STATION DIAL TRANSFER)
(SD-66909, SD-66921)

[36] Did sequence relays W and CTZ lock operated when BA relay momentarily released (following station B's second switchhook flash)

No → [37] See FIG. 9. Check operate, lock path(s) of W and/or CTZ relays

Yes ↓

[38] Is trunk party A added on call with stations B and C

No → [39] Check talk path to trunk party A per FIG. 8

Yes

Call transfer-individual complete

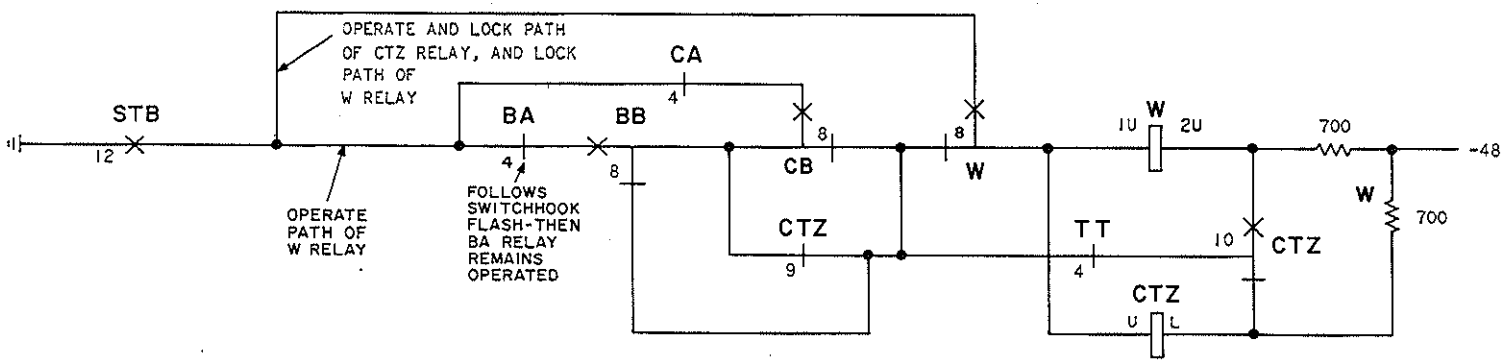

FIG. 9

CLEAR CALL TRANSFER-INDIVIDUAL TROUBLE (WAS STATION DIAL TRANSFER)
(SD-66909, SD-66921)

SUMMARY

Establish a busy station-to-station connection. Initiate an incoming CO trunk call (eg, from test board) via trunk(s) associated with camp-on trouble. Answer at the attendant console, and try to camp the call on the calling station of the busy (test) station-to-station connection. Advance the call until failure occurs. Use FIG. 3 page 4, to locate CO trunk or cordless position circuit relays. This procedure assumes the marker and dial pulse registers operated properly to dial or direct station select (DSS) the called busy station, but there is a camp-on feature failure.

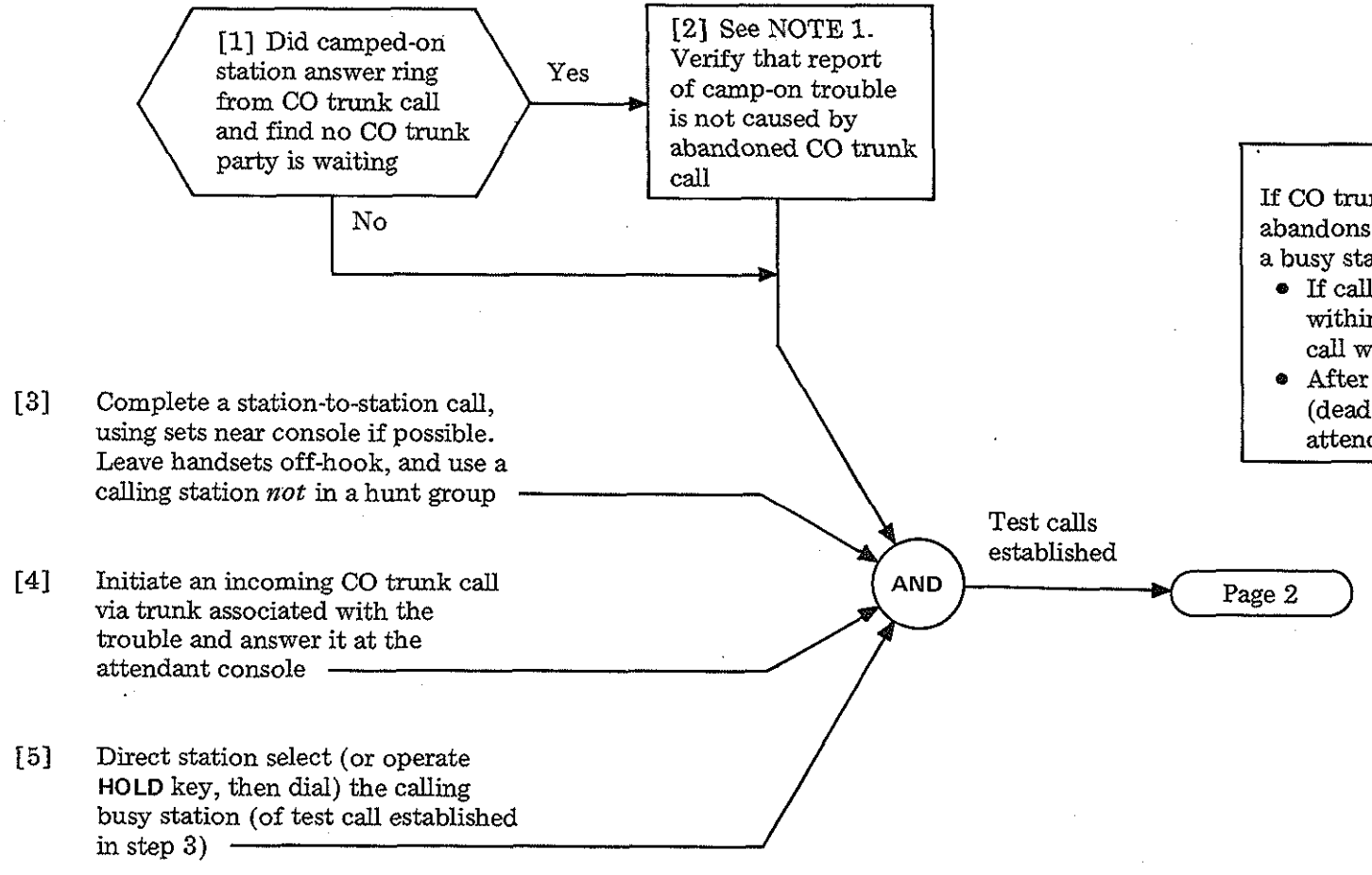

NOTE 1

If CO trunk party hangs up and abandons call after being camped-on a busy station:

- If called busy station hangs up within 15-20 seconds, "dead" call will ring through
- After 15-20 seconds, abandoned (dead) call may time out to attendant trunk

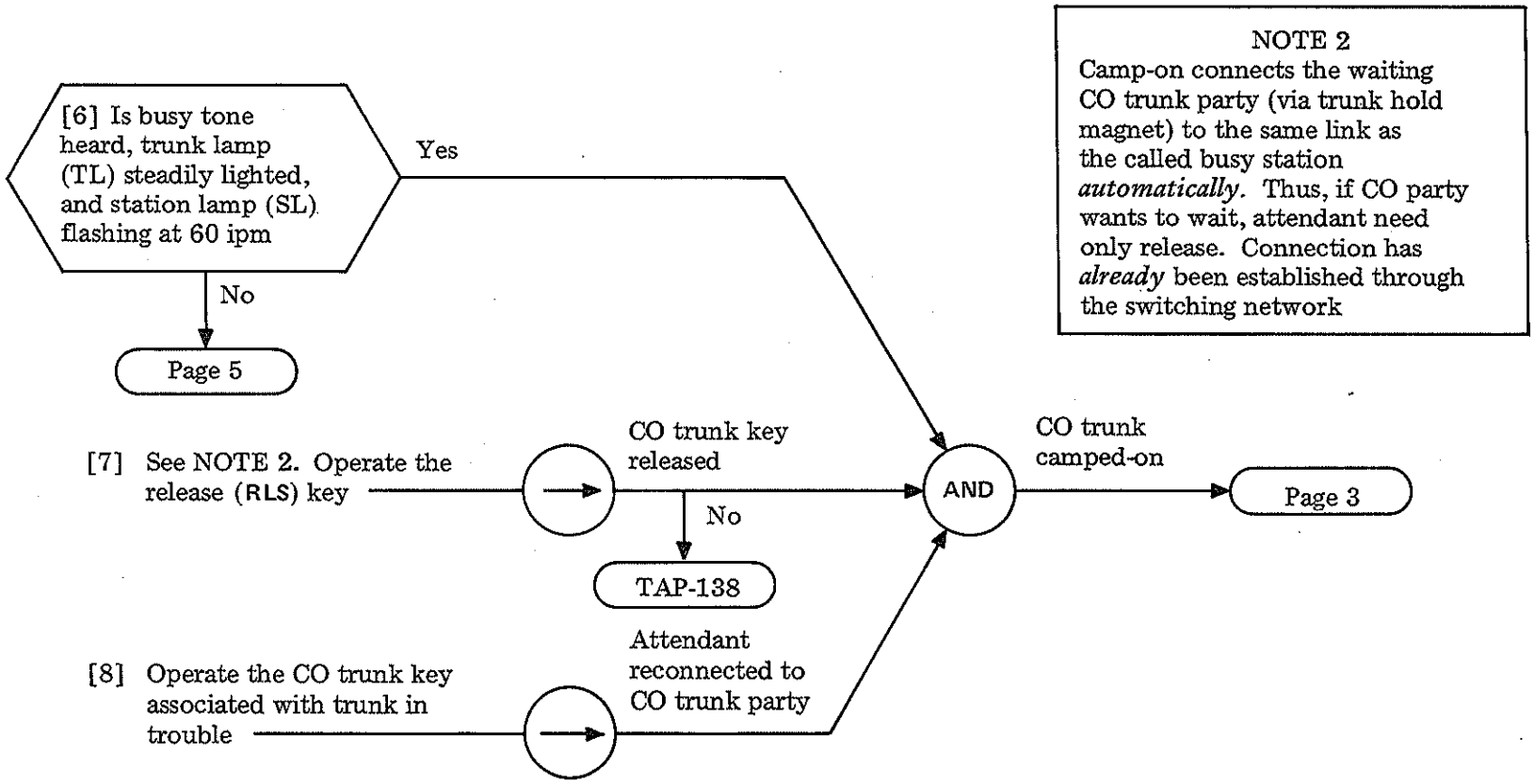

CLEAR CAMP-ON TROUBLE

[9] Operate RLS key

[10] Is indication of camp-on (single half-second burst) tone heard on busy station connection

No → [11] Check indication of camp-on tone path [FIG. 1]. See FIG. 3, page 4, for CO trunk and cordless position locations

Yes

[12] Hang up handsets at both stations made busy in step 3

[13] Did SL (sleeve) relay operate

Yes → [15] Is ringer heard at camped-on station, and SL changed to 30 ipm at console

No → [14] Check operate path of SL relay [FIG. 2]. See FIG. 3 page 4, for CO trunk location

[15] Yes. Camp-on discharged → Page 4

[15] No → TAP-131 steps 27-30

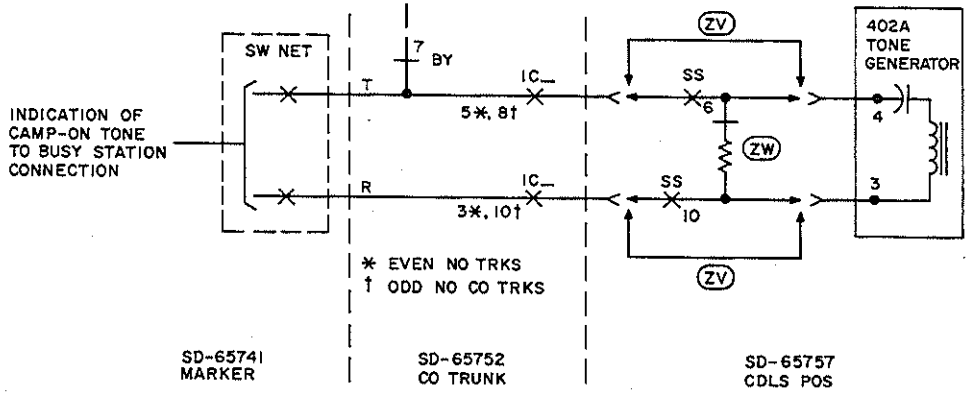

FIG. 1

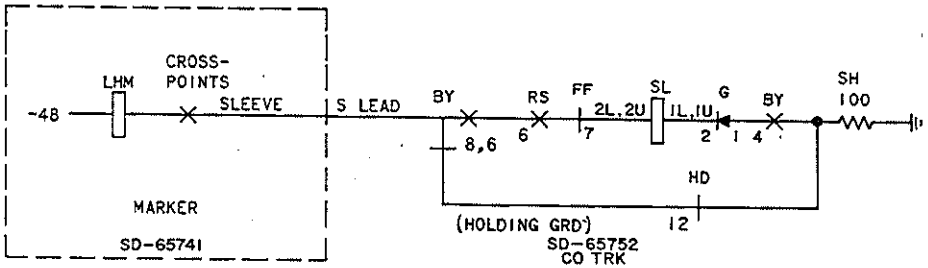

FIG. 2

CLEAR CAMP-ON TROUBLE

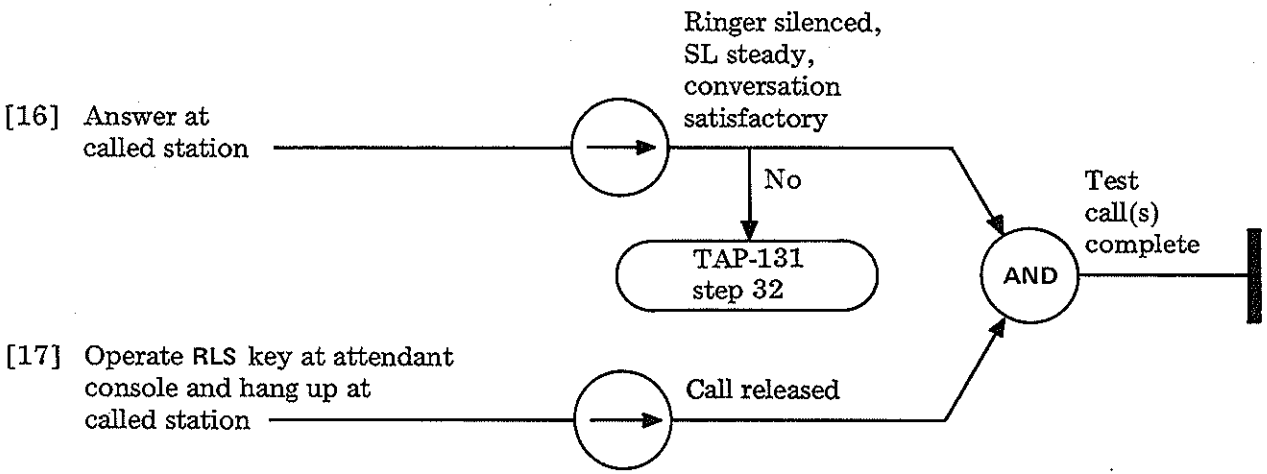
[16] Answer at called station
Ringer silenced, SL steady, conversation satisfactory
No
TAP-131 step 32
[17] Operate RLS key at attendant console and hang up at called station
Call released
AND
Test call(s) complete

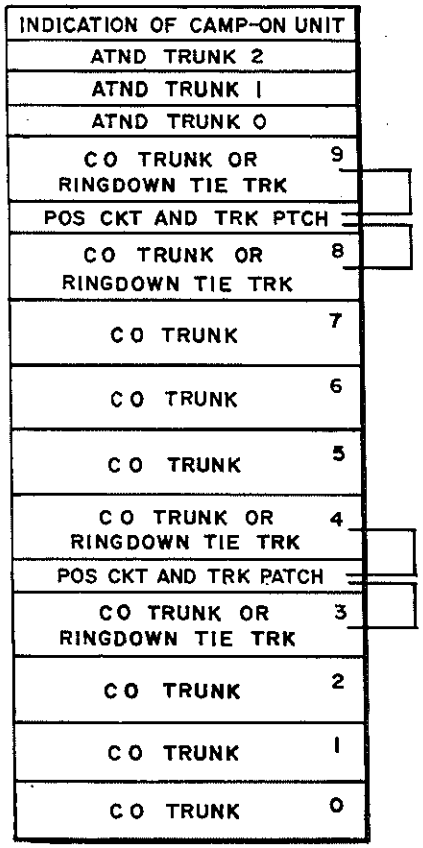
INDICATION OF CAMP-ON UNIT
ATND TRUNK 2
ATND TRUNK 1
ATND TRUNK 0
CO TRUNK OR RINGDOWN TIE TRK 9
POS CKT AND TRK PTCH
CO TRUNK OR RINGDOWN TIE TRK 8
CO TRUNK 7
CO TRUNK 6
CO TRUNK 5
CO TRUNK OR RINGDOWN TIE TRK 4
POS CKT AND TRK PATCH
CO TRUNK OR RINGDOWN TIE TRK 3
CO TRUNK 2
CO TRUNK 1
CO TRUNK 0

SLIDE 5

FIG. 3

[18] Did BY (busy) relay lock operated (locate CO trunk using FIG. 8, page 6)

No → [19] Check operate path of BY relay [FIG. 4]

Yes ↓

[20] Did DR (delayed ring) relay operate

No → [21] Check operate path of DR relay [FIG. 5]

Yes ↓

[22] Did RS (ring start) relay operate

No → [23] Check operate path of RS relay [FIG. 6]

Yes ↓

Page 6

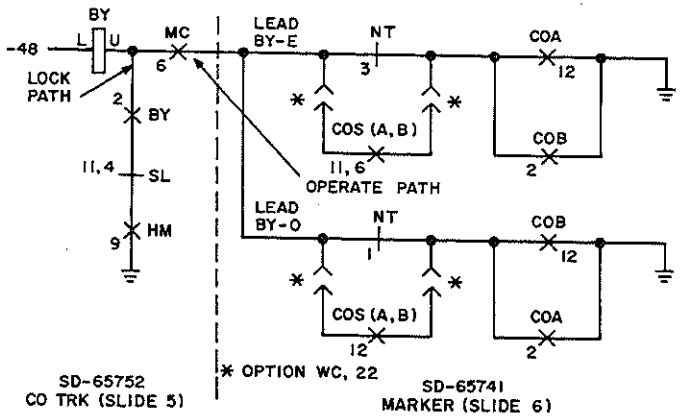

FIG. 4

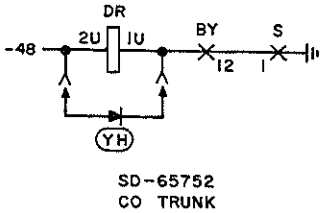

FIG. 5

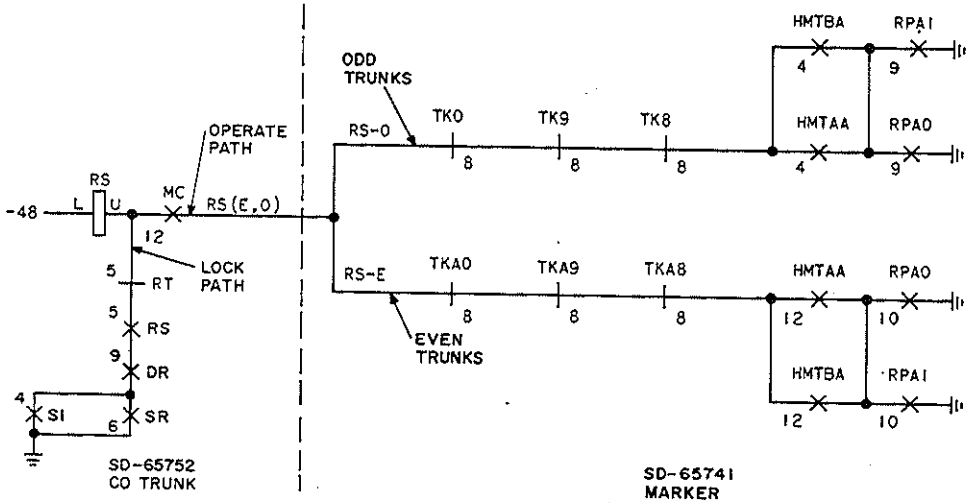

FIG. 6

CLEAR CAMP-ON TROUBLE

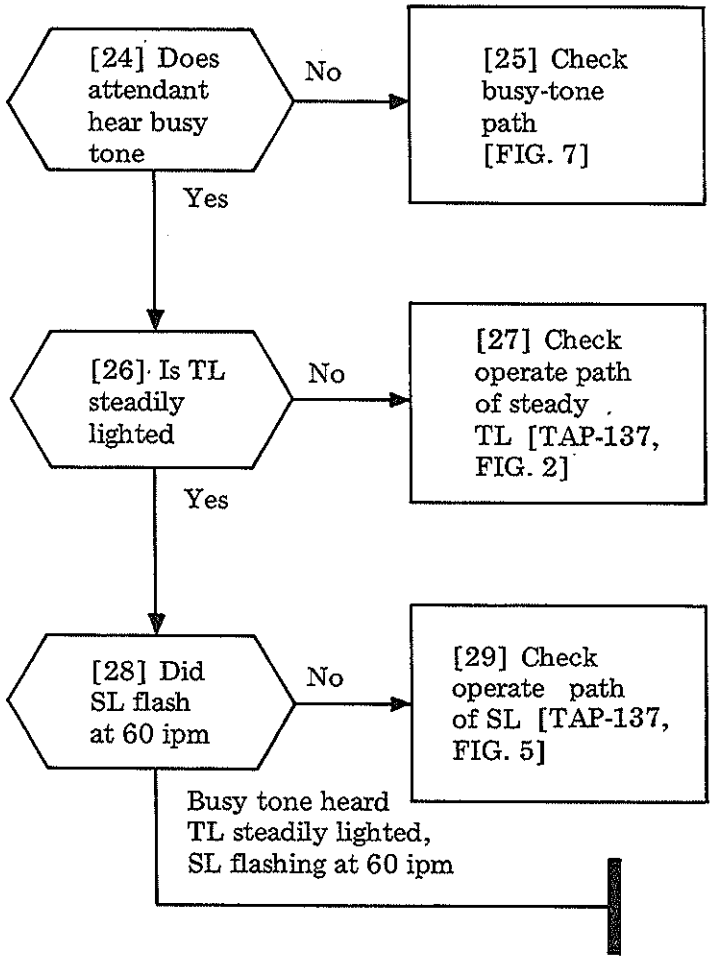
[24] Does attendant hear busy tone
No
[25] Check busy-tone path [FIG. 7]
Yes
[26] Is TL steadily lighted
No
[27] Check operate path of steady TL [TAP-137, FIG. 2]
Yes
[28] Did SL flash at 60 ipm
No
[29] Check operate path of SL [TAP-137, FIG. 5]
Busy tone heard TL steadily lighted, SL flashing at 60 ipm

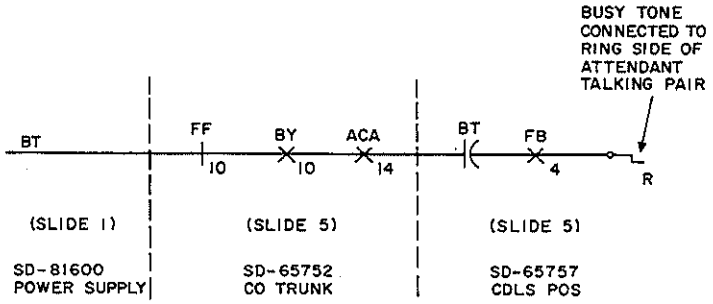
BUSY TONE CONNECTED TO RING SIDE OF ATTENDANT TALKING PAIR
BT
FF
10
BY
10
ACA
14
BT
FB
4
R
(SLIDE 1)
SD-81600 POWER SUPPLY
(SLIDE 5)
SD-65752 CO TRUNK
(SLIDE 5)
SD-65757 CDLS POS

FIG. 7

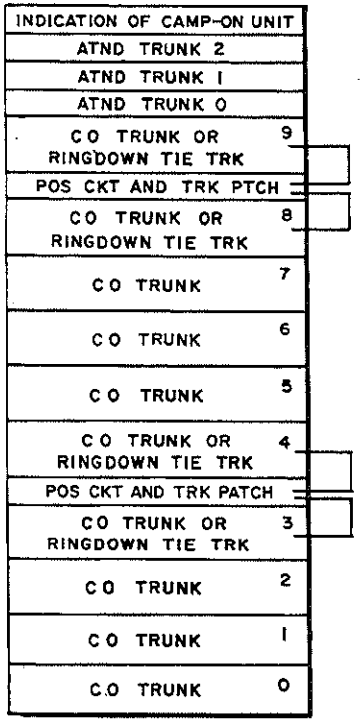
INDICATION OF CAMP-ON UNIT
ATND TRUNK 2
ATND TRUNK 1
ATND TRUNK 0
CO TRUNK OR RINGDOWN TIE TRK 9
POS CKT AND TRK PTCH
CO TRUNK OR RINGDOWN TIE TRK 8
CO TRUNK 7
CO TRUNK 6
CO TRUNK 5
CO TRUNK OR RINGDOWN TIE TRK 4
POS CKT AND TRK PATCH
CO TRUNK OR RINGDOWN TIE TRK 3
CO TRUNK 2
CO TRUNK 1
CO TRUNK 0
SLIDE 5

FIG. 8

SUMMARY

Initiate and advance a CO or attendant trunk call to the point of lamp failure. From the attendant console, determine if the failure involves:

- One, or more than one lamp
- CO or attendant (ATND) trunk(s)

If the lamp(s) works at times, see if the failure occurs when the lamp(s) should be:

- Steadily lighted,
- On slow flash (SF—30 ipm),
- On fast flash (FF—120 ipm),
- Flashing (F—60 ipm)

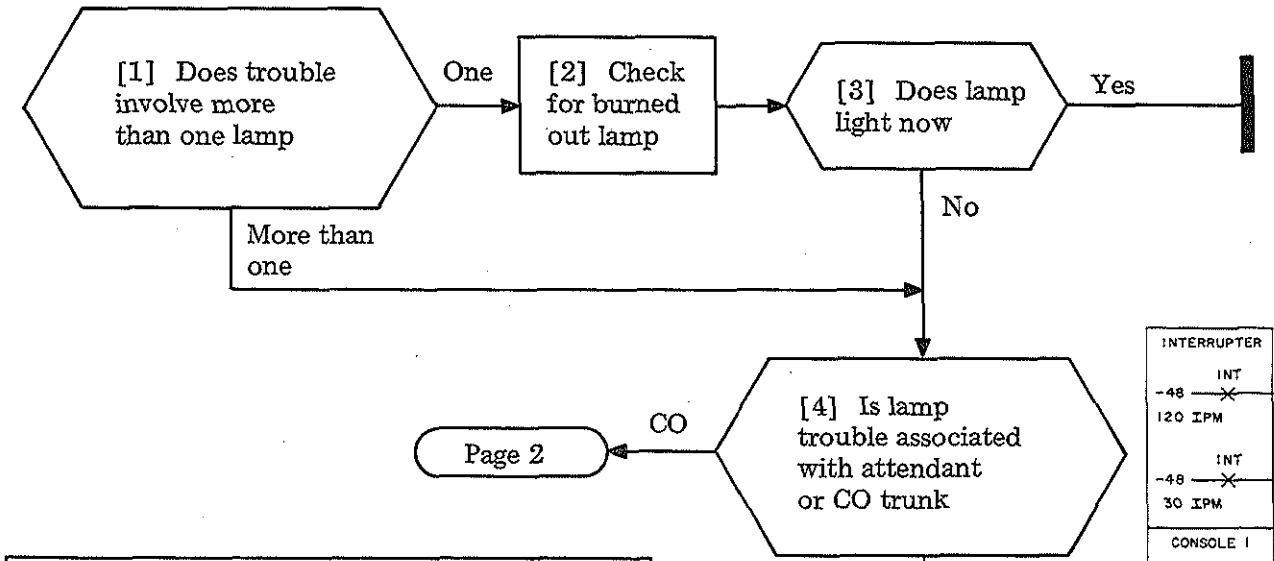

TABLE A				
LEADS FROM INTERRUPTER (FIG. 1) TO ATND TRK		SLIDE 5		LAMP SIGNAL
0, 2	1	PLUG	PIN	
	SF1	C	0	30 ipm
SF2		F	1	
	FF1	A	1	120 ipm
FF2		F	3	

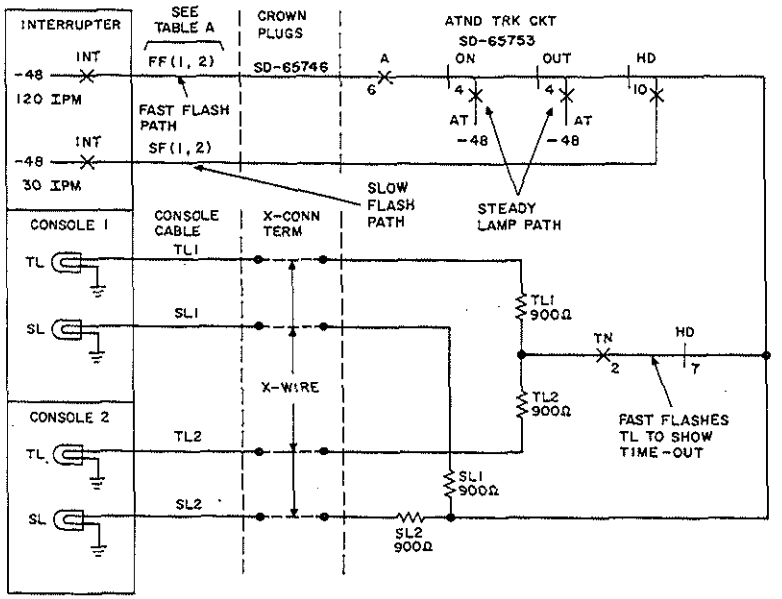

FIG. 1

Issue 1	May 1975
551-100-101	TAP
PAGE 1 of 4	137

CLEAR CONSOLE CO AND ATTENDANT TRUNK LAMP TROUBLE

[6] Is trouble with steady lamp signal

Yes → [7] Check operate path of steady trunk lamp (TL) [FIG. 2] or station lamp (SL) per FIG. 3

No ↓

[8] Is trouble with slow flash lamp signal

Yes → [9] Check slow flash operate path:
SL [FIG. 3]
TL [FIG. 4]
See TABLE B and NOTE 1

No → Page 3

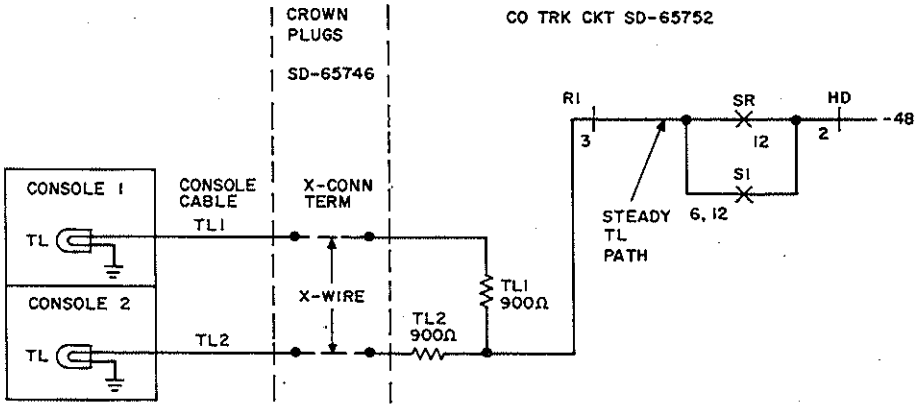

FIG. 2

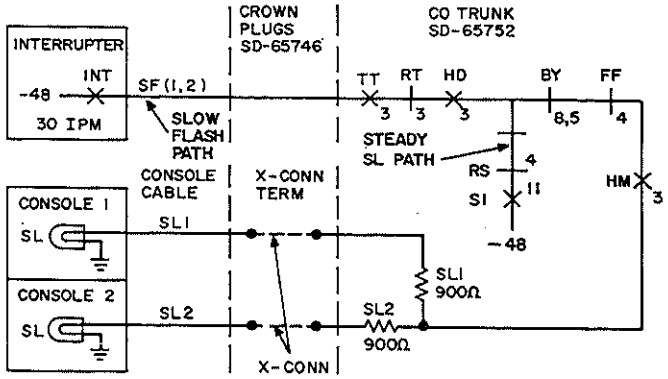

FIG. 3

TABLE B

LEADS FROM INTERRUPTER TO CO TRUNK		SLIDE 5		LAMP SIGNAL
0, 2, 4, 6, 8	1, 3, 5, 7, 9	PLUG	PIN	
	SF1	C	0	30 ipm
SF2		F	1	

CLEAR CONSOLE CO AND ATTENDANT TRUNK LAMP TROUBLE

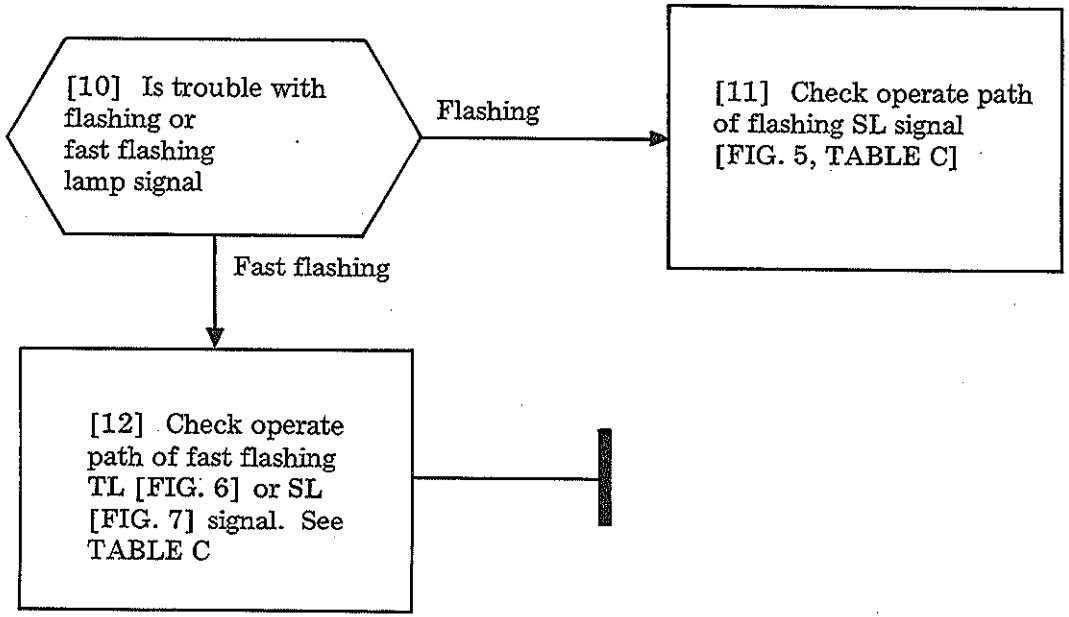

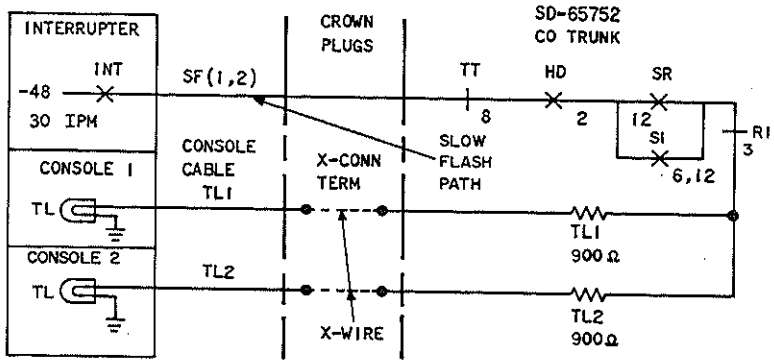

FIG. 4

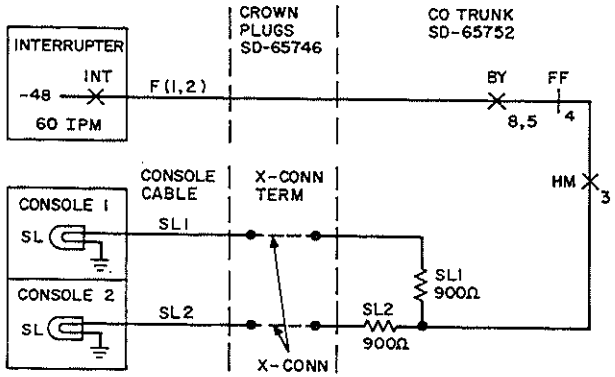

FIG. 5

TABLE C				
LEADS FROM INTERRUPTER TO CO TRUNK		SLIDE 5		LAMP SIGNAL
0, 2, 4, 6, 8	1, 3, 5, 7, 9	PLUG	PIN	
	F1			60 ipm
F2				
	FF1			120 ipm
FF2				

CLEAR CONSOLE CO AND ATTENDANT TRUNK LAMP TROUBLE

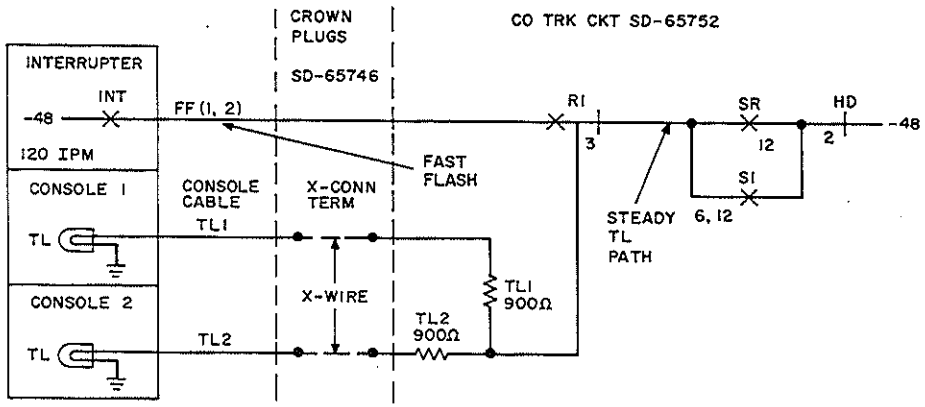

FIG. 6

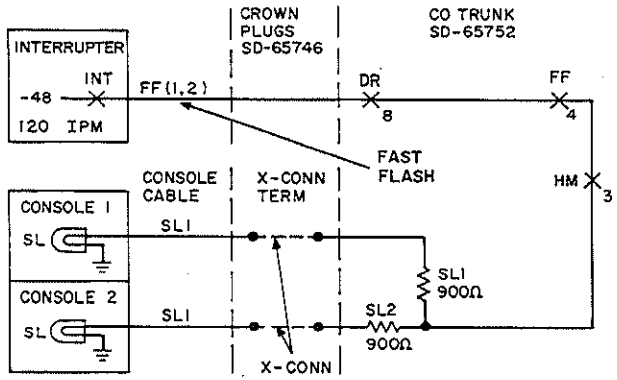

FIG. 7

CLEAR CONSOLE CO AND ATTENDANT TRUNK LAMP TROUBLE

SUMMARY

Check to see whether trouble is

- Mechanical (key stuck, broken, dimly lit, etc) or
- Electrical (eg, can't pick up call, noisy, weak dial tone, etc)

Use this procedure to determine whether to clean, adjust, or replace key.

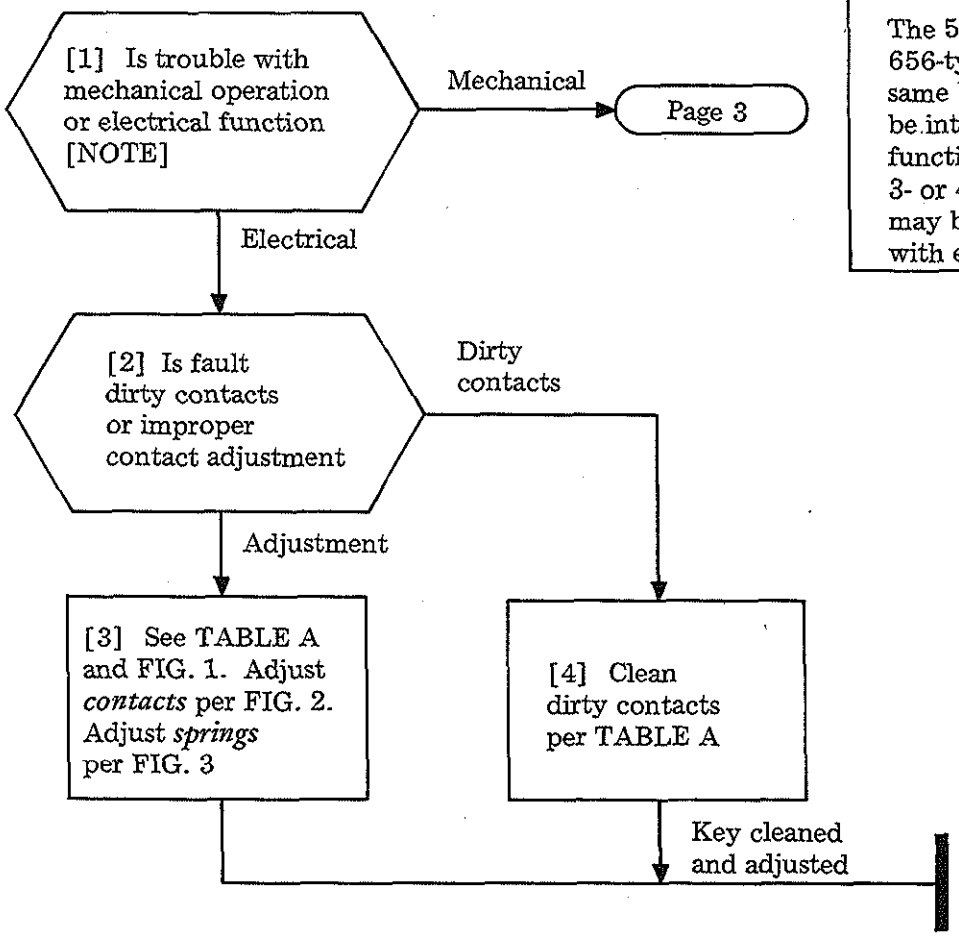

NOTE

The 598-type and newer 656-type keys have the same basic design and can be intermixed. Operating functions are identical. The 3- or 4-type consoles may be equipped with either.

TABLE A

CONTACT FAULT	TROUBLE CLEARING PROCEDURE
Adjustment	Gauge open *contacts to:* .006 (min) for 598-type key .010 (min) for 656-type key.
	Check *spring* separation (minimum 1/64 inch)
Dirty	Burnish contacts using 265C tool equipped with 266E tool (blade) and/or draw strip of KS 7188 relay cleaning paper through held-closed contacts

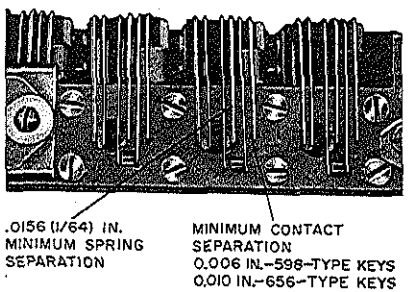

FIG. 1

CLEAR CONSOLE KEY TROUBLE

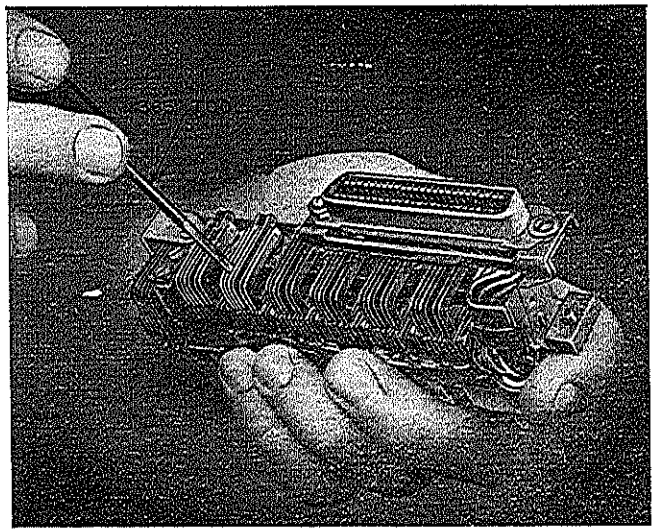

FIG. 2

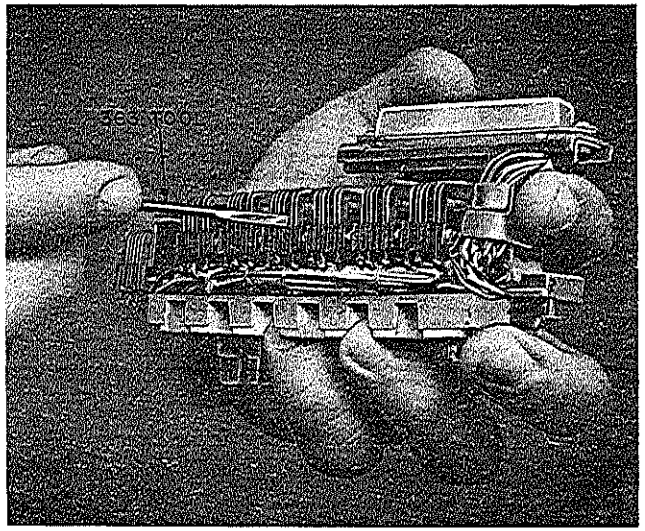

FIG. 3

CLEAR CONSOLE KEY TROUBLE

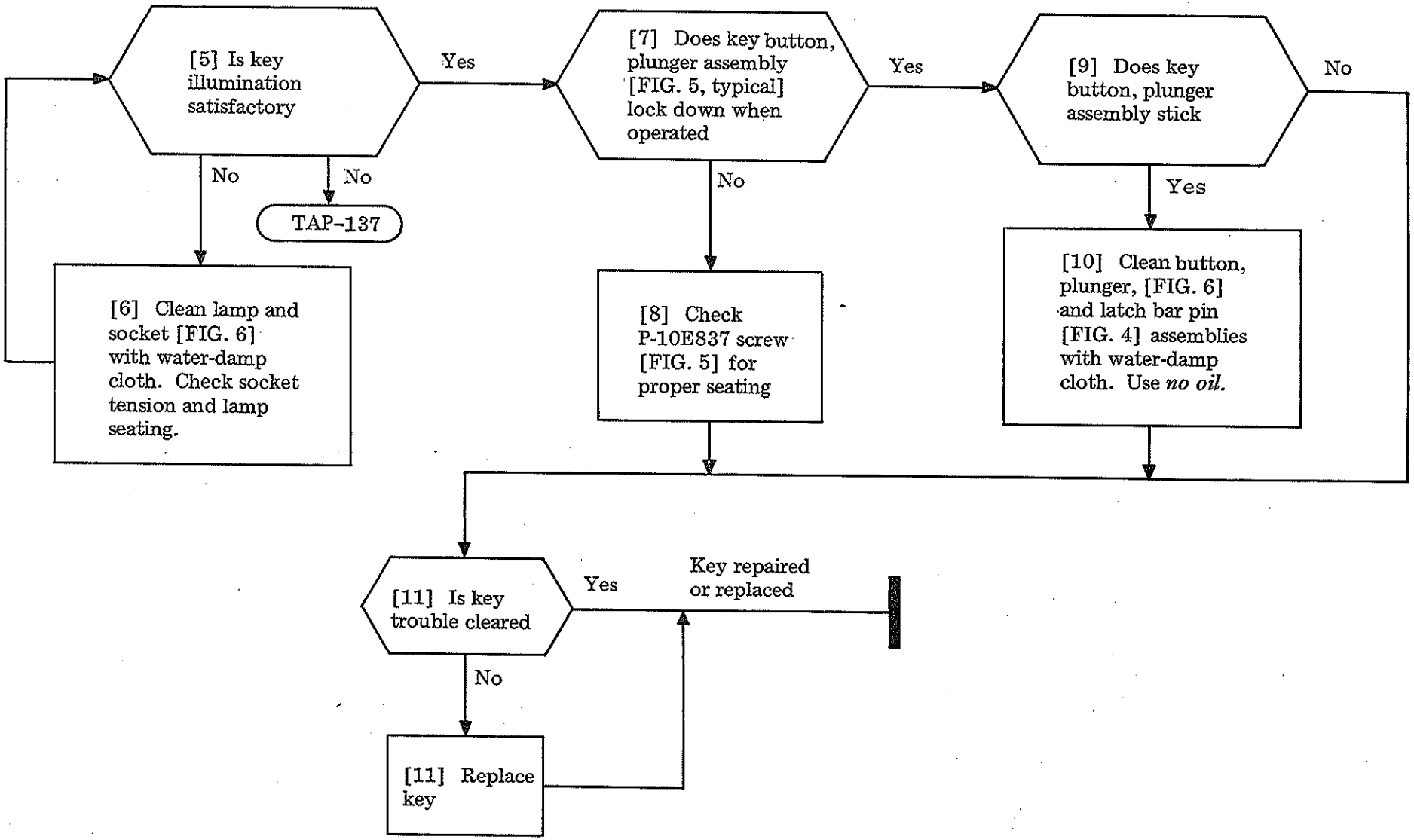

CLEAR CONSOLE KEY TROUBLE

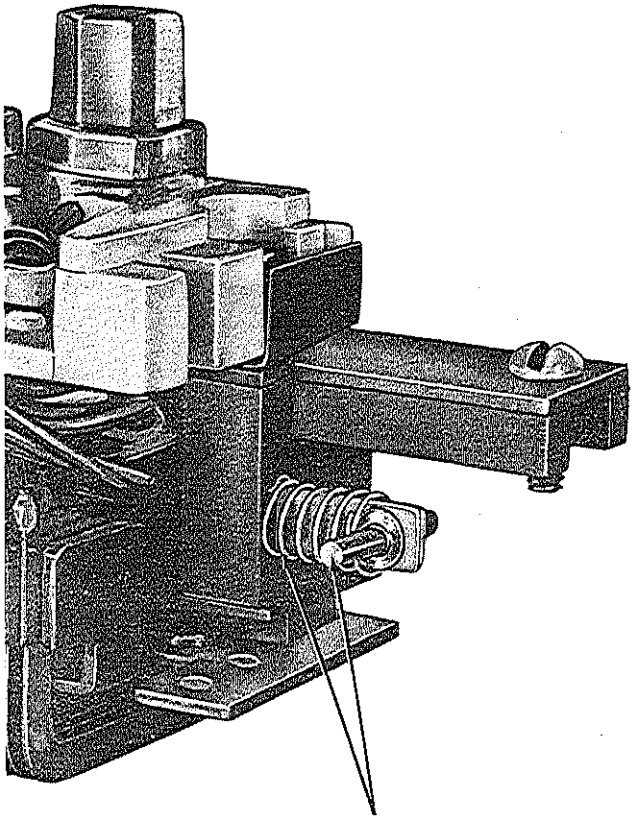

FIG. 4 — Location of Latch Bar Return Spring and Pin

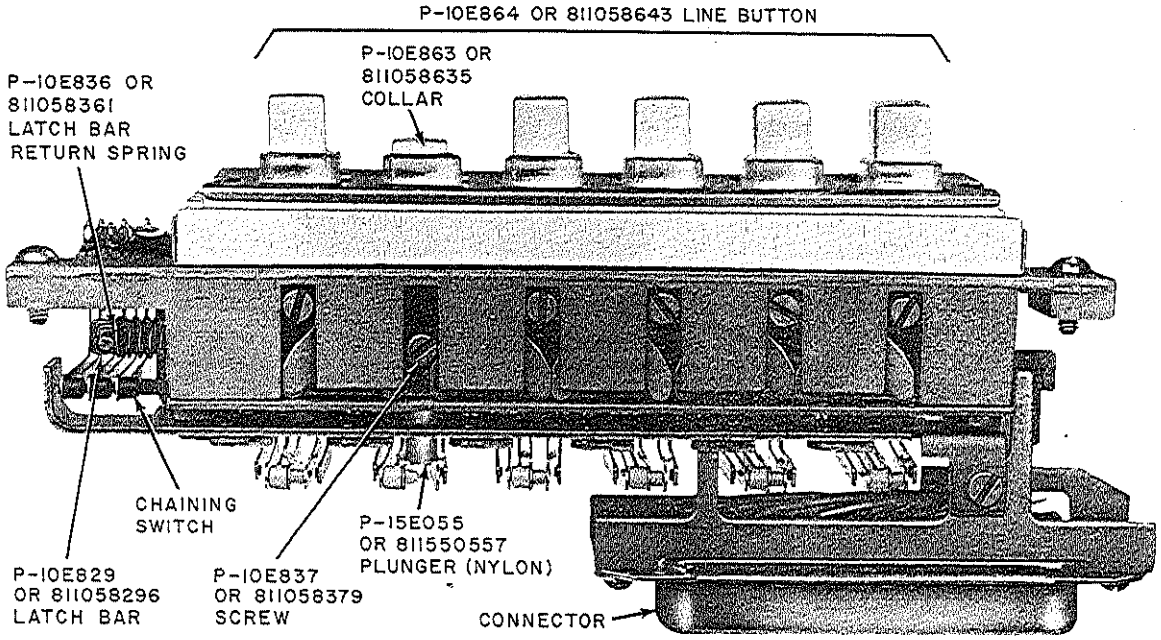

FIG. 5 — Typical (598-Type) Key

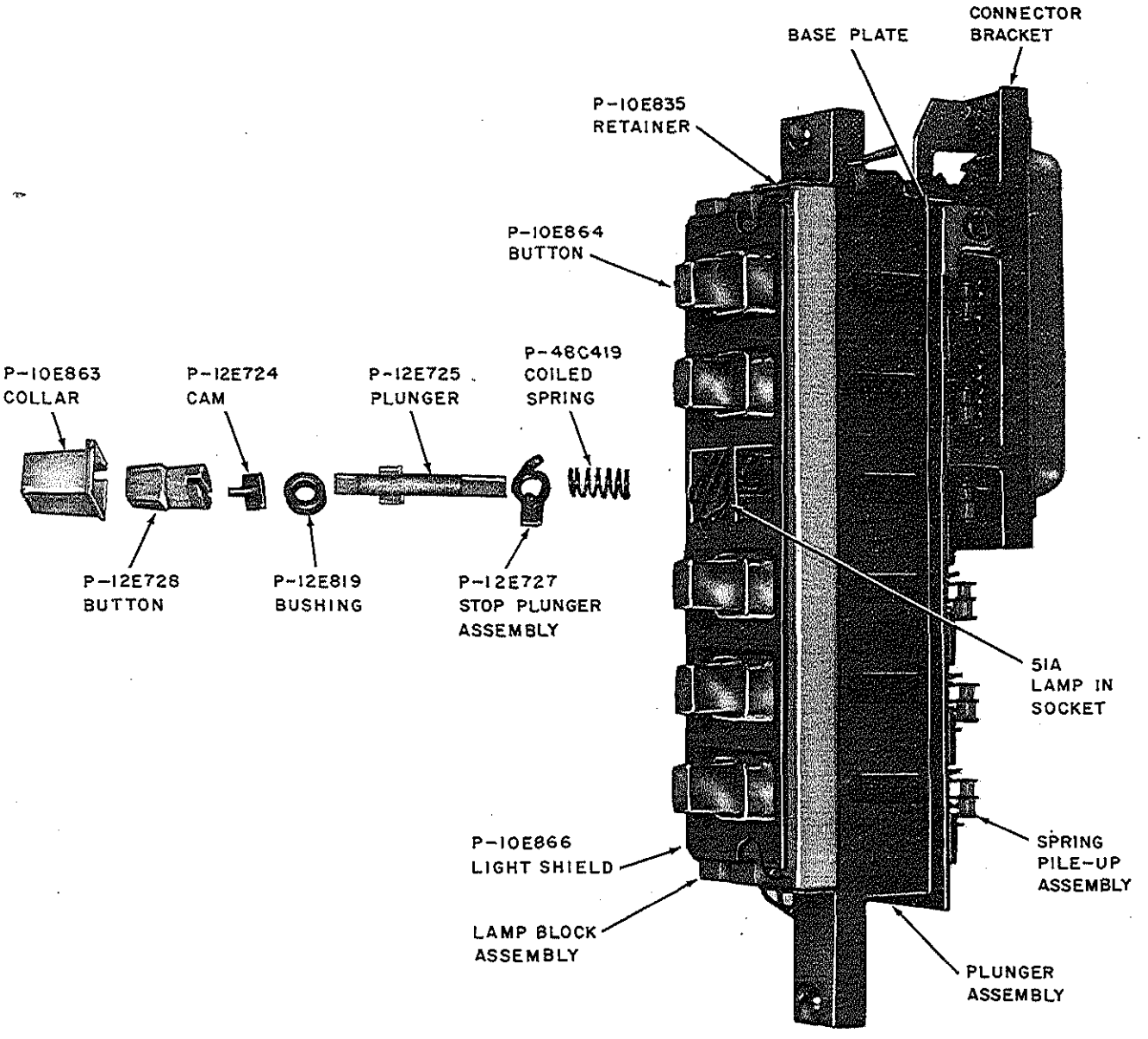

FIG. 6 — Typical (598-Type) Assembly

SUMMARY

From the trouble report and/or a steady trunk lamp (TL) at the attendant console, determine:

- Which CO trunk can't be released
- Whether attendant or station can't release CO trunk.

If a station is involved, check to see if CO trunk hold magnet released when station hung up. Locate the fault using the figure or other reference given. This procedure assumes the CO trunk has operated properly to connect to the attendant position and/or station, but cannot be released.

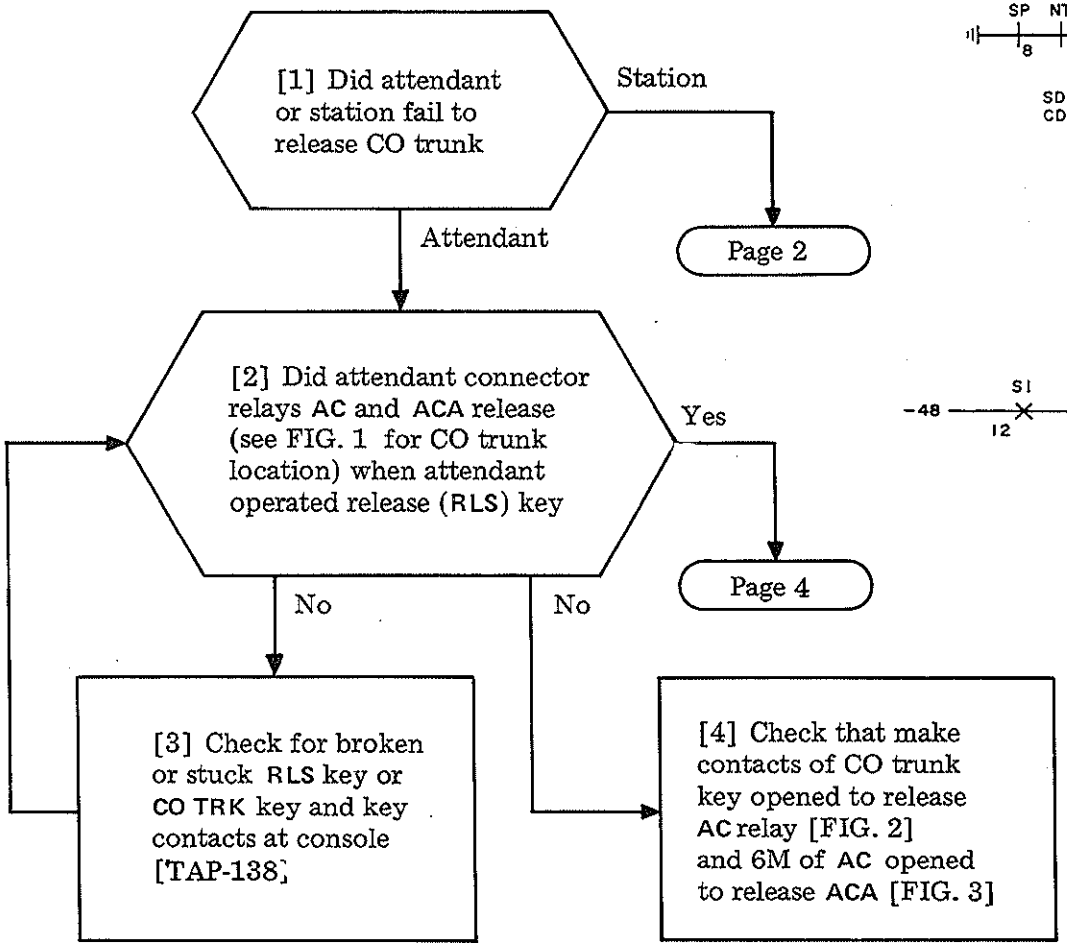

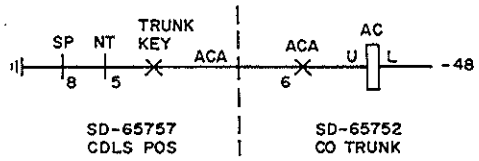

FIG. 2

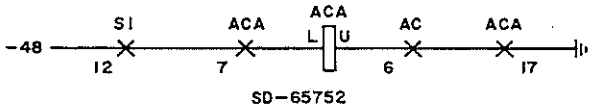

FIG. 3

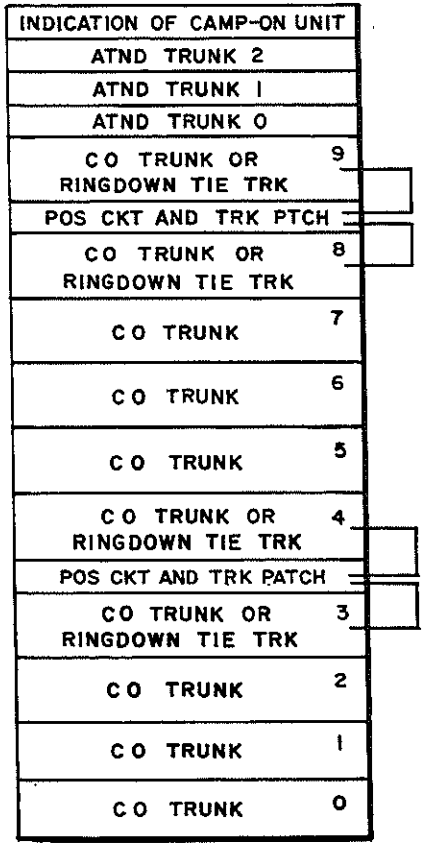

SLIDE 5

FIG. 1

CLEAR CO TRUNK RELEASE TROUBLE (SD-65752)

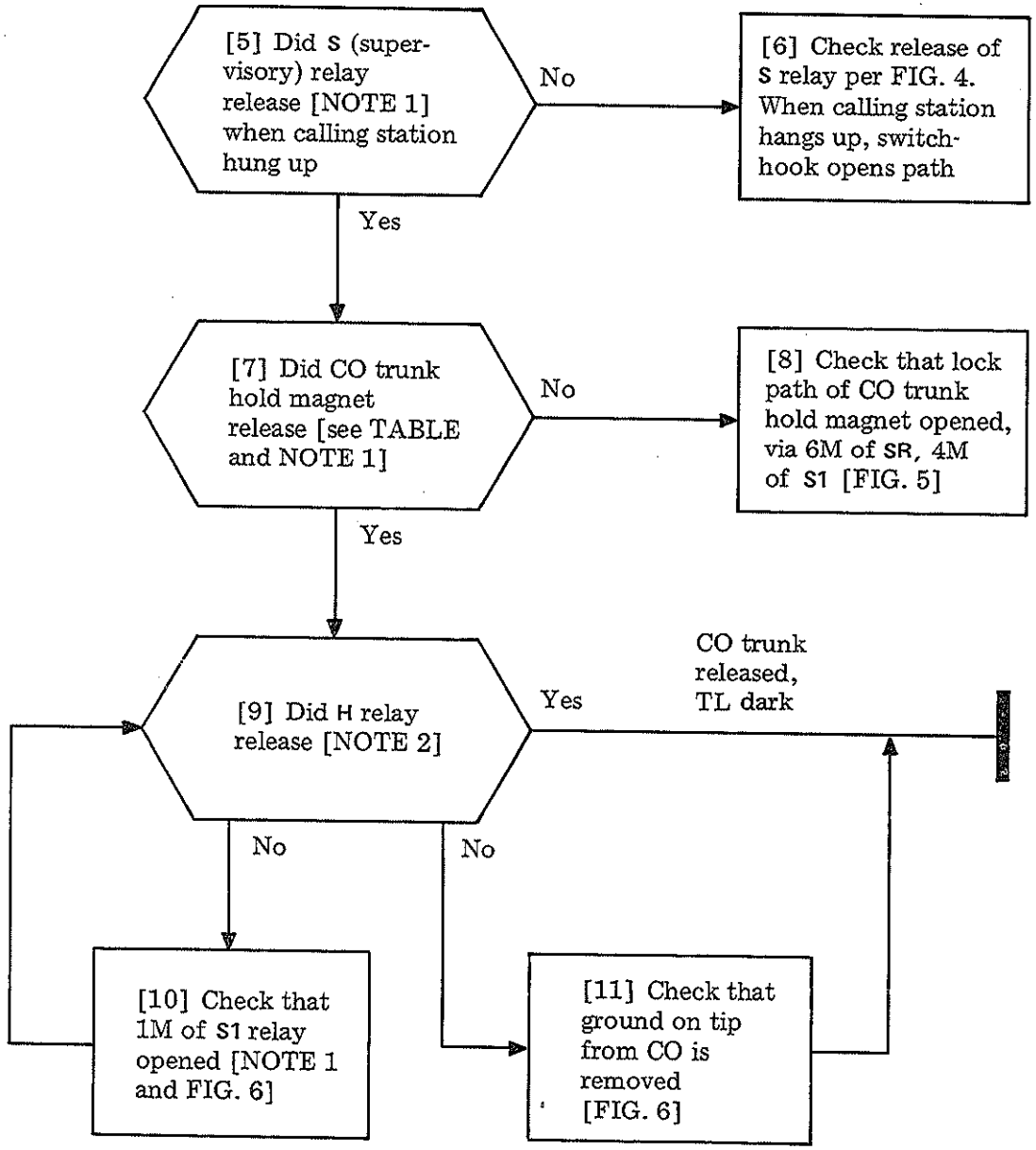

TABLE			
CO TRK	THM LOC		
	SL	SW	VERT
0	4	0	0
1			1
2			2
3			3
4			4
5		8	5
6			6
7			7
8			8
9			9

NOTES

1. Release of S relay releases trunk hold magnet, S1, CT, SR, and H relays.
2. Armature travel of H relay is difficult to see. If associated CO trunk lamp is dark at console, H relay released.

CLEAR CO TRUNK RELEASE TROUBLE (SD-65752)

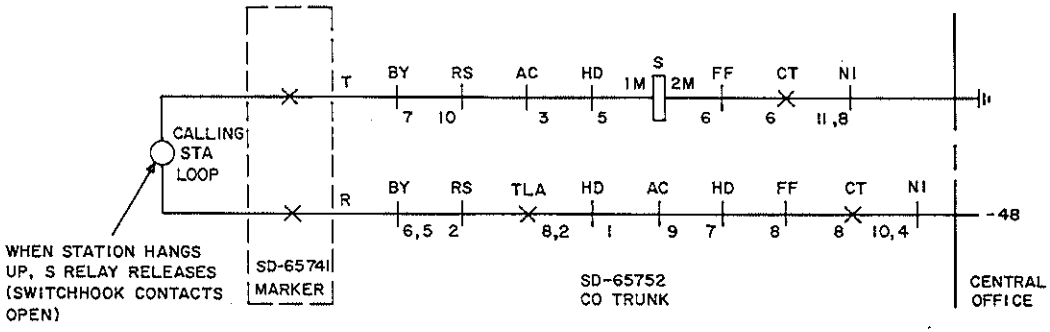

FIG. 4

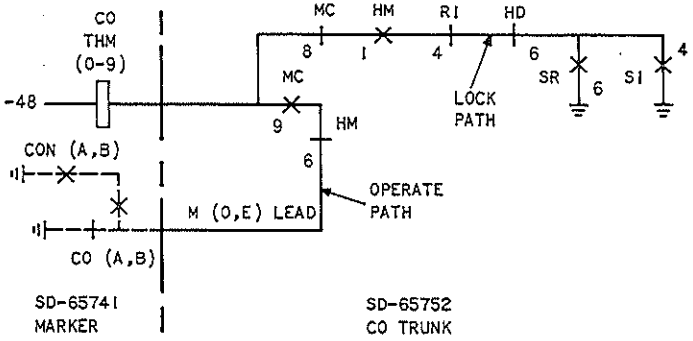

FIG. 5

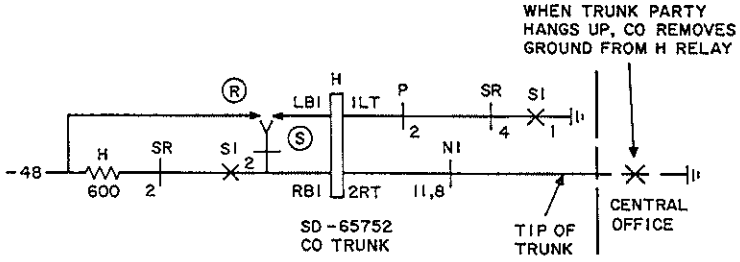

FIG. 6

CLEAR CO TRUNK RELEASE TROUBLE (SD-65752)

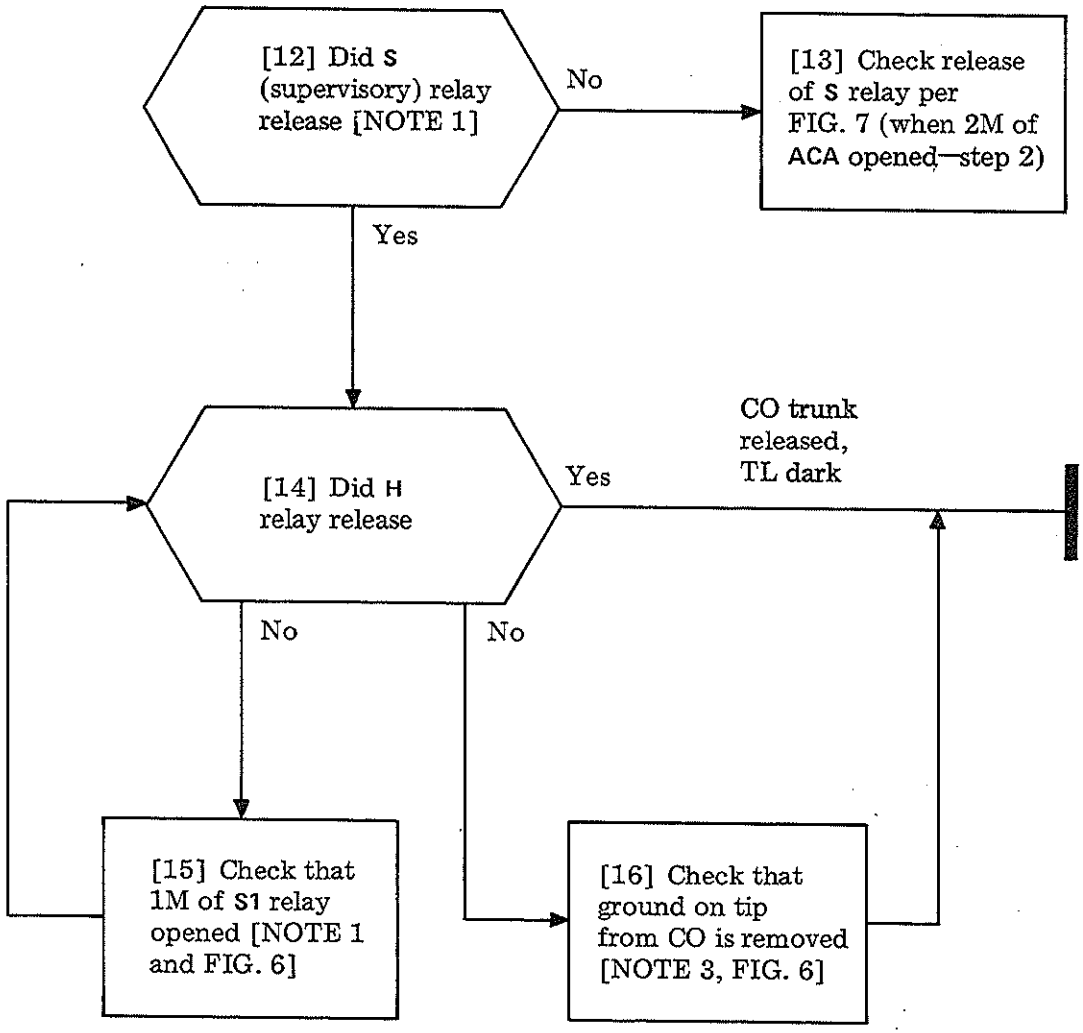

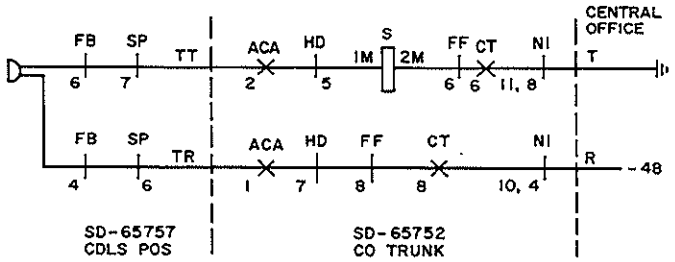

FIG. 7

CLEAR CO TRUNK RELEASE TROUBLE (SD-65752)

SUMMARY

Initiate a dial "0" call from an unrestricted station to the attendant trunk associated with the trouble [NOTE 1] Operation of the trunk hold magnet connecting a certain attendant trunk (0-2) to the switching network can be observed at slide 4. See TABLE. Repeat test calls until the defective component is isolated. When a failure is observed at the equipment location or attendant console, find the fault using the figure or other reference given.

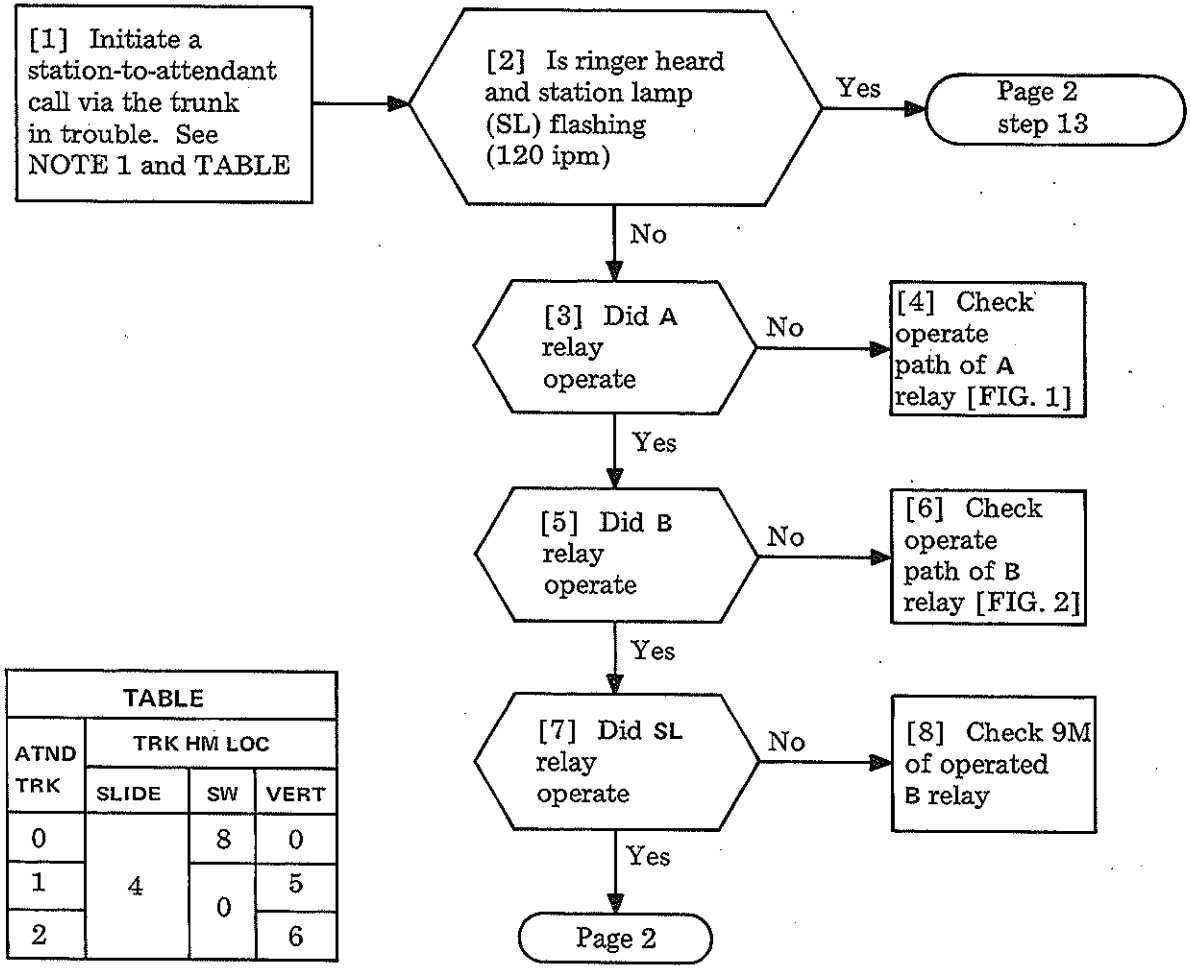

NOTE 1

To busy out an attendant trunk (0-2) unit (located at top of slide 5, mounting plates Y, Z, AA), insulate 11M of B relay and block it operated, or operate attendant trunk key of make-busy and busy display unit (slide 2), if provided. Remove busy when test is complete

TABLE			
ATND TRK	TRK HM LOC		
	SLIDE	SW	VERT
0	4	8	0
1		0	5
2			6

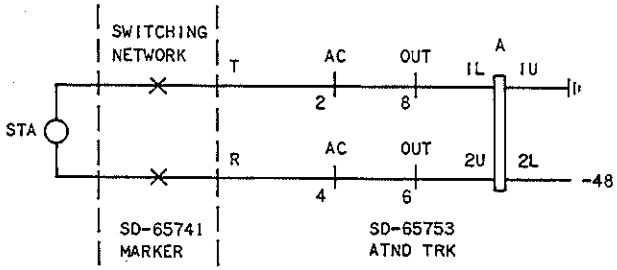

FIG. 1

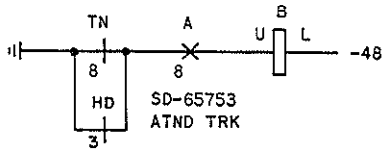

FIG. 2

CLEAR DIAL 0 TROUBLE (SD-65753)

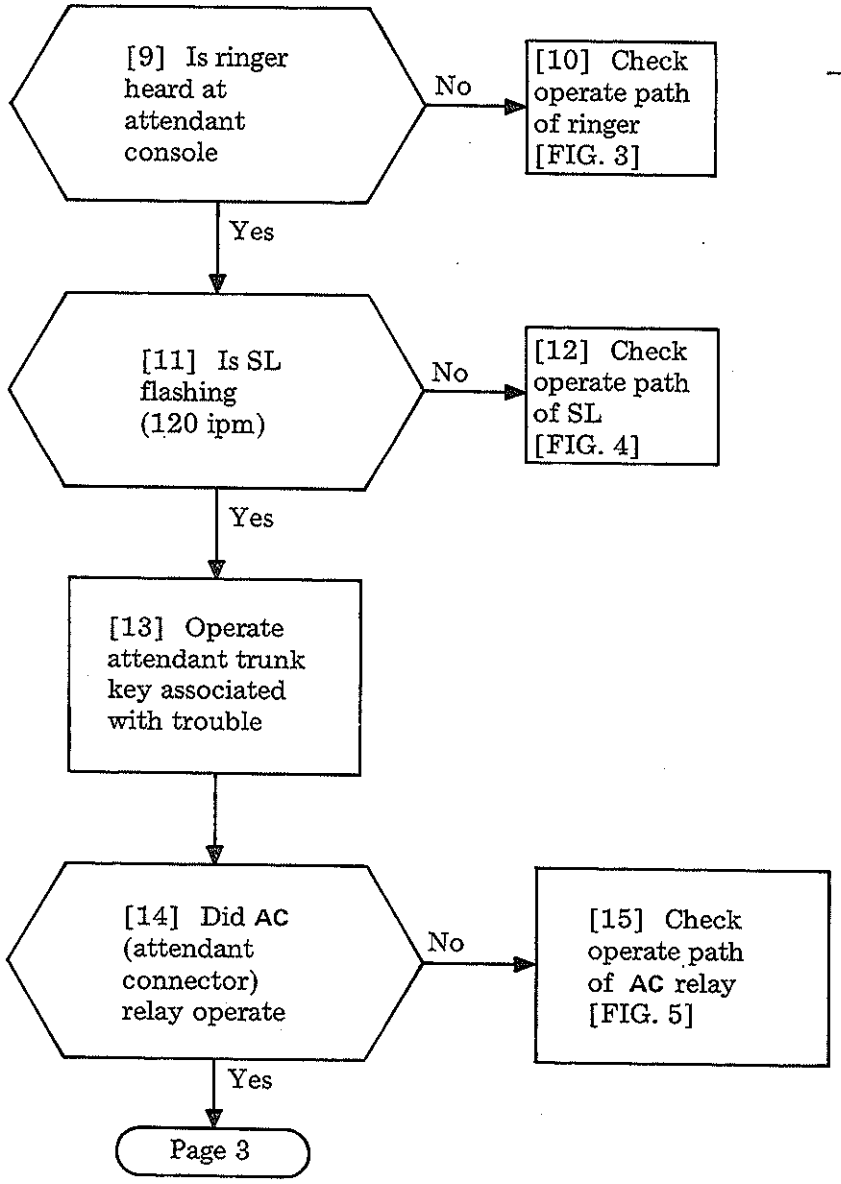

CLEAR DIAL 0 TROUBLE (SD-65753)

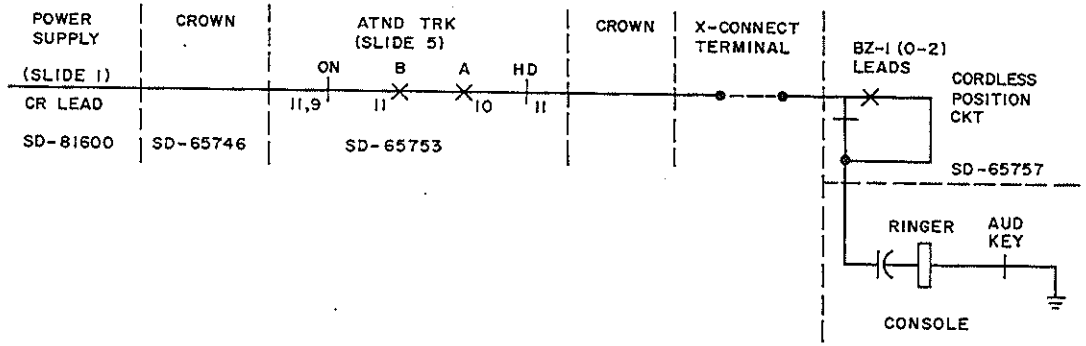

FIG. 3

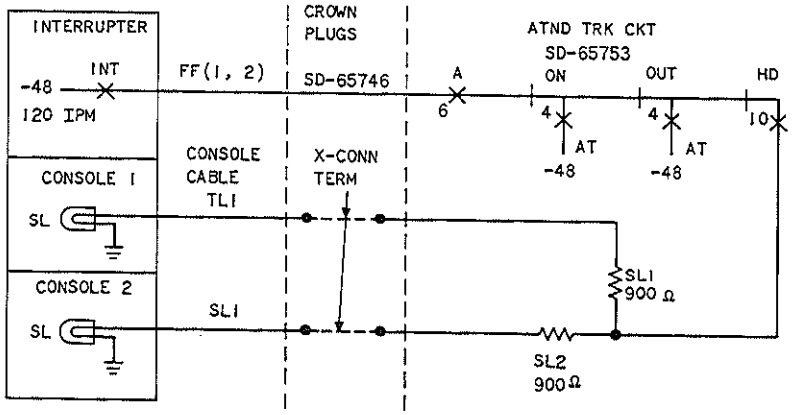

FIG. 4

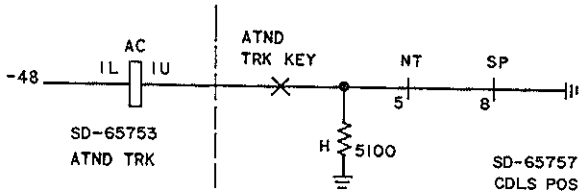

FIG. 5

Issue 1	May 1975
551-100-101	TAP
Page 2 of 4	140

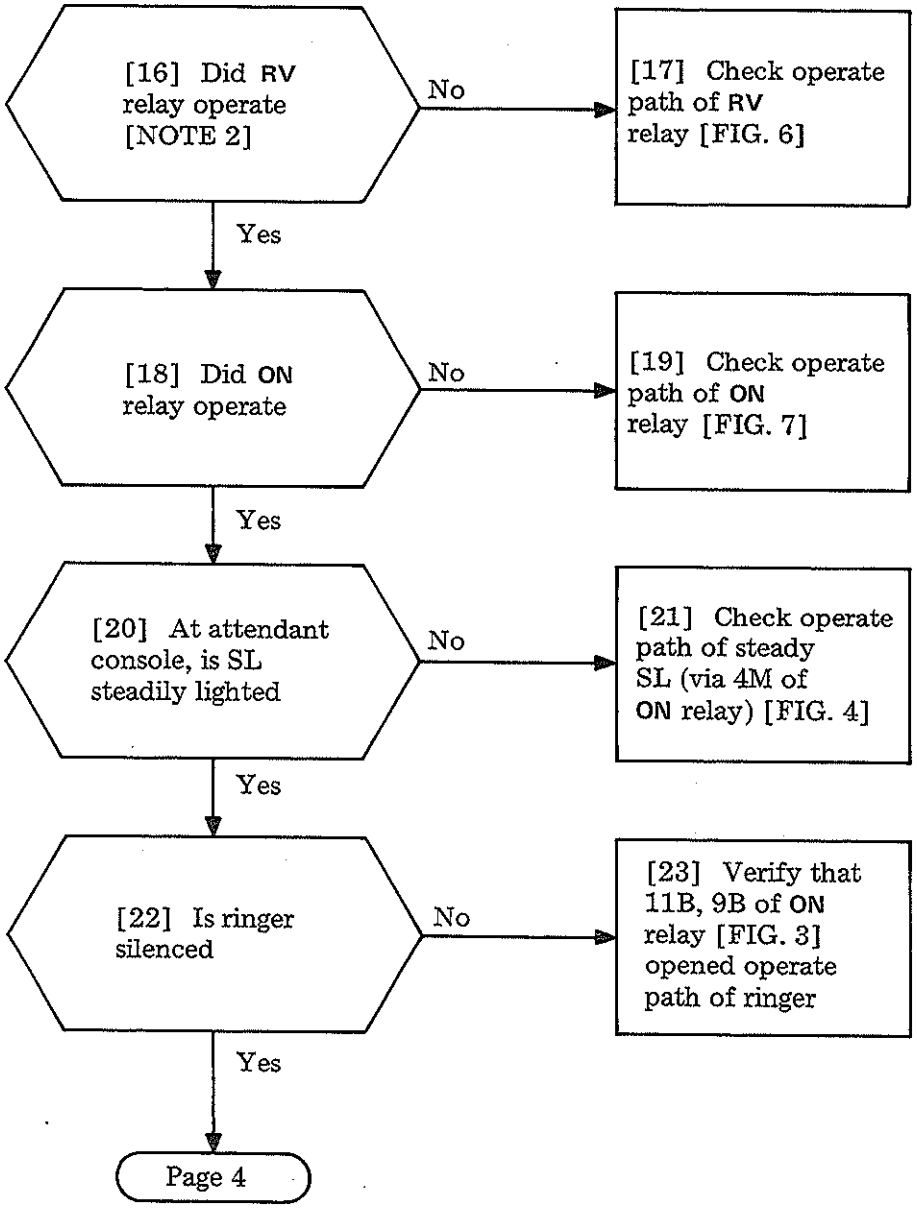

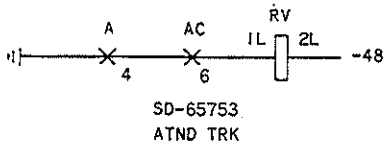

FIG. 6

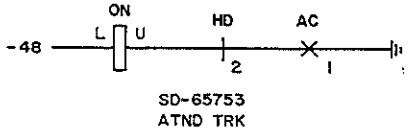

FIG. 7

NOTE 2
RV (reversing) relay provides reverse-battery supervision for calls from dial repeating tie trunks

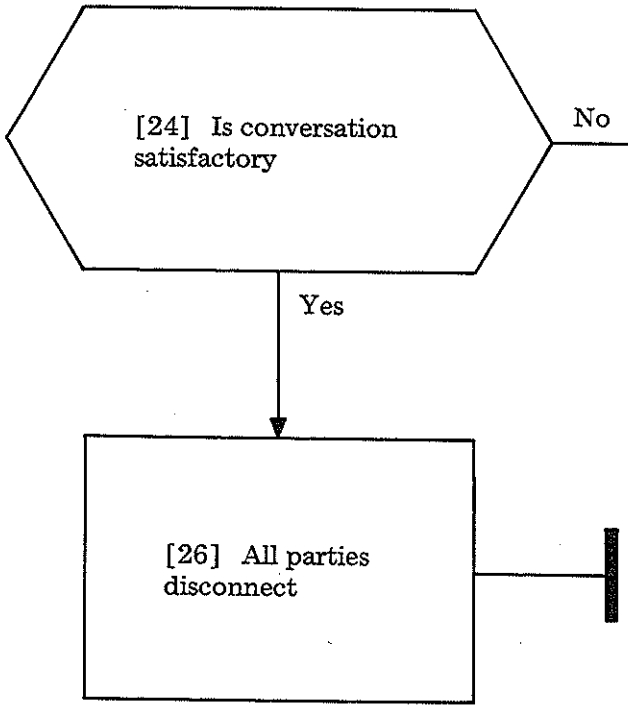

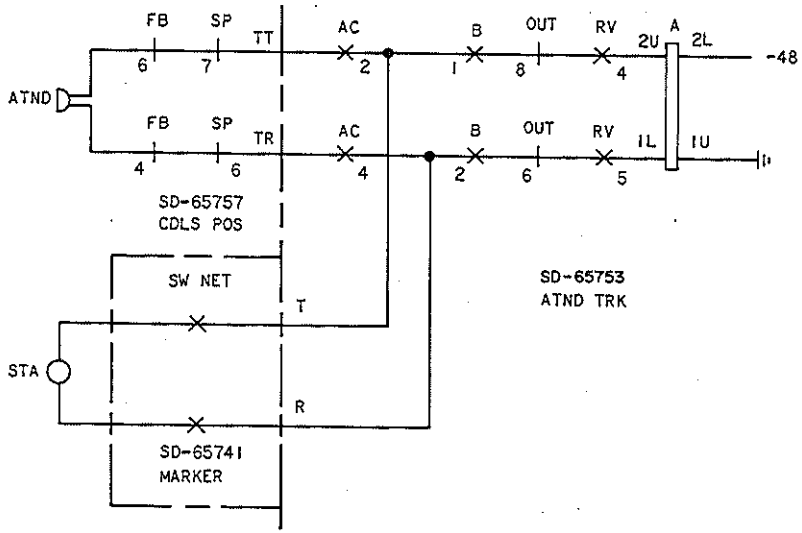

FIG. 8

CLEAR DIAL 0 TROUBLE (SD-65753)

SUMMARY

Connect dial hand test set to connecting block for station 39, located at slide 2, mounting plate L [NOTE 1]. Make a test intercept call (by dialing a CO trunk code 9 or 9—) to the attendant trunk associated with the trouble [NOTE 2]. Operation of the trunk hold magnet (THM) connecting a specific attendant trunk (0-2) to the switching network can be observed at slide 4. See TABLE. Repeat test calls until the defective component is isolated. When a failure is observed at the equipment location or attendant console, find the fault using the figure or other reference given.

[1] Initiate test intercept call(s) to attendant from test station 39 [NOTE 1]

[2] At attendant console, is ringer heard and both station lamp (SL) and trunk lamp (TL) flashing (120 ipm)

Yes → Page 3 step 15

No →

[3] Did THM lock operated [TABLE]

No → [4] Check lock path of THM [FIG. 1]

Yes →

[5] Is TN (tone) relay operated [NOTE 2]

No → [6] Check operate path of TN relay [FIG. 2]

Yes → Page 2

NOTE 1

Station 39 is normally restricted and used *only* as a test station. Verify that S to S1 strap only is in place on LINE terminal strip (for station 39) located at slide 3, mounting plate L

NOTE 2

To busy out an attendant trunk (0-2) unit (located at top of slide 5, mounting plates Y, Z, AA), insulate 11M of B relay and block it operated, or operate attendant trunk key of make-busy and busy display unit (slide 2), if provided. Remove busy when test is complete.

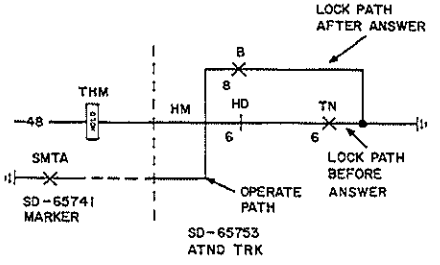

FIG. 1

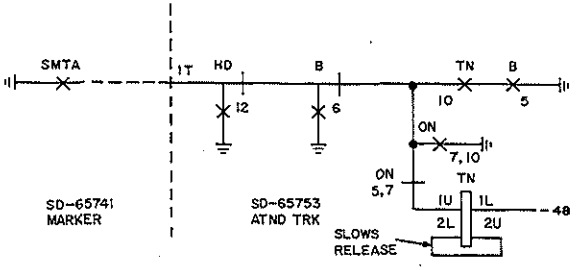

FIG. 2

TABLE			
ATND TRK	TRK HM LOC		
	SLIDE	SW	VERT
0	4	8	0
1		0	5
2			6

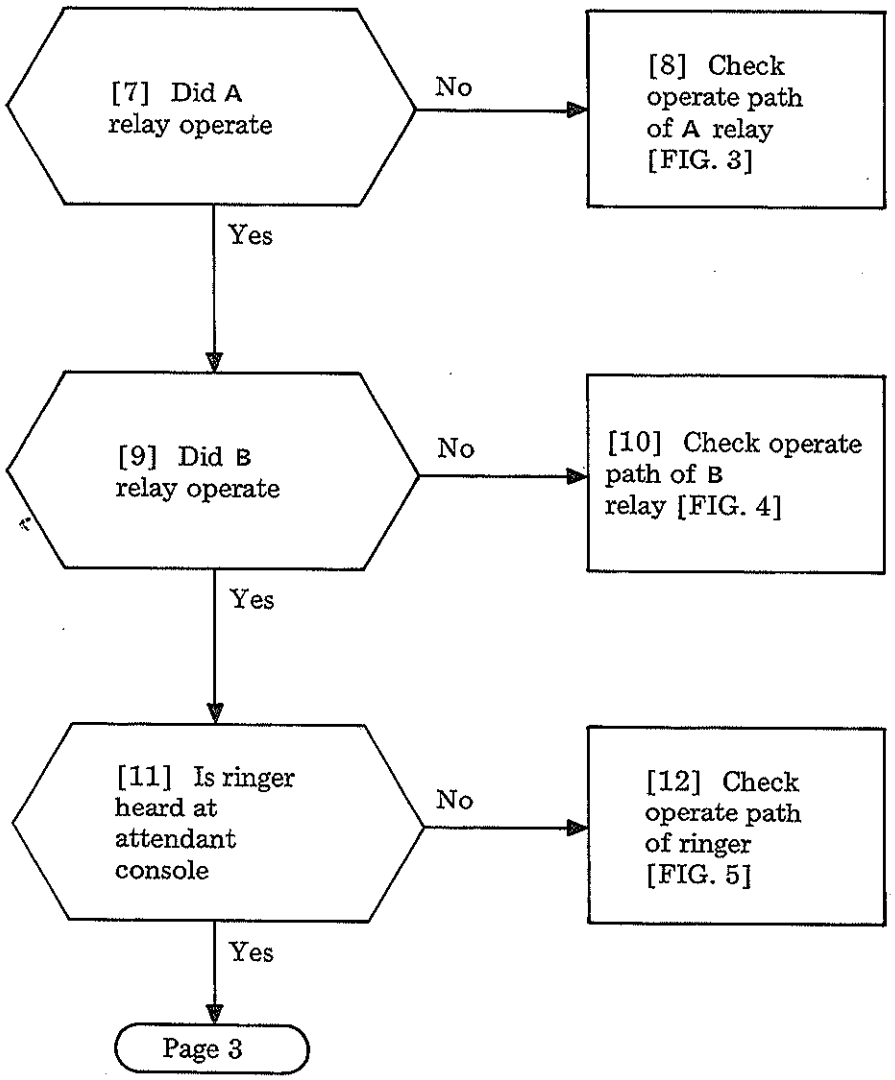

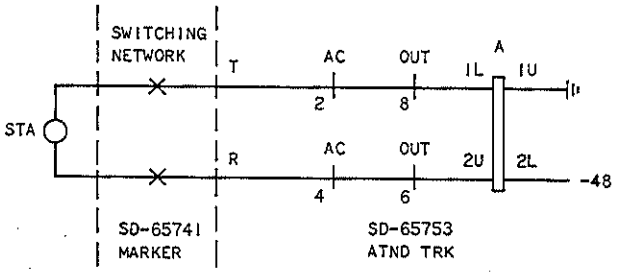

FIG. 3

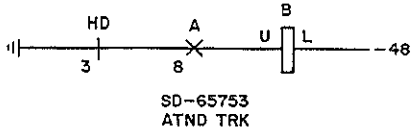

FIG. 4

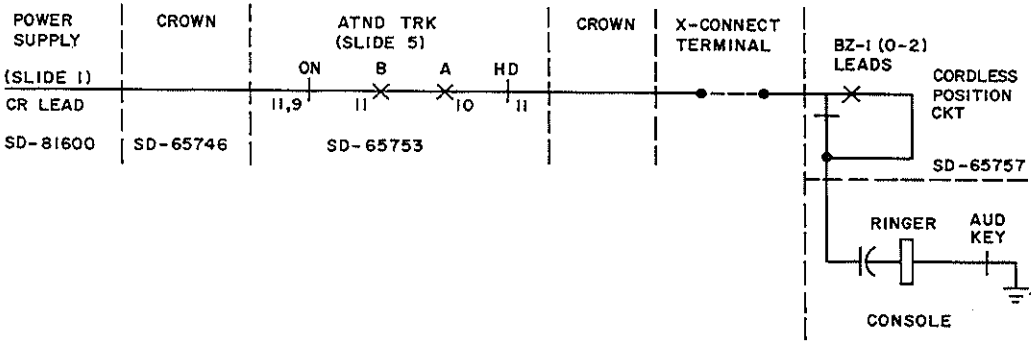

FIG. 5

Issue 1	May 1975
551-100-101	TAP
PAGE 2 of 5	141

CLEAR INTERCEPT TROUBLE (SD-65753)

[13] Are both SL and TL flashing at 120 ipm (to signal the attendant to intercept call)

No → [14] Check operate path of SL, TL [FIG. 6]

Yes ↓

[15] Operate attendant trunk key associated with flashing SL and TL [NOTE 3]

NOTE 3
If attendant trunk hold magnet does not remain locked operated, check 8M of B relay [FIG. 1]

[16] Did AC (attendant connector) relay operate

No → [17] Check operate path of AC relay [FIG. 7]

Yes ↓

Page 4

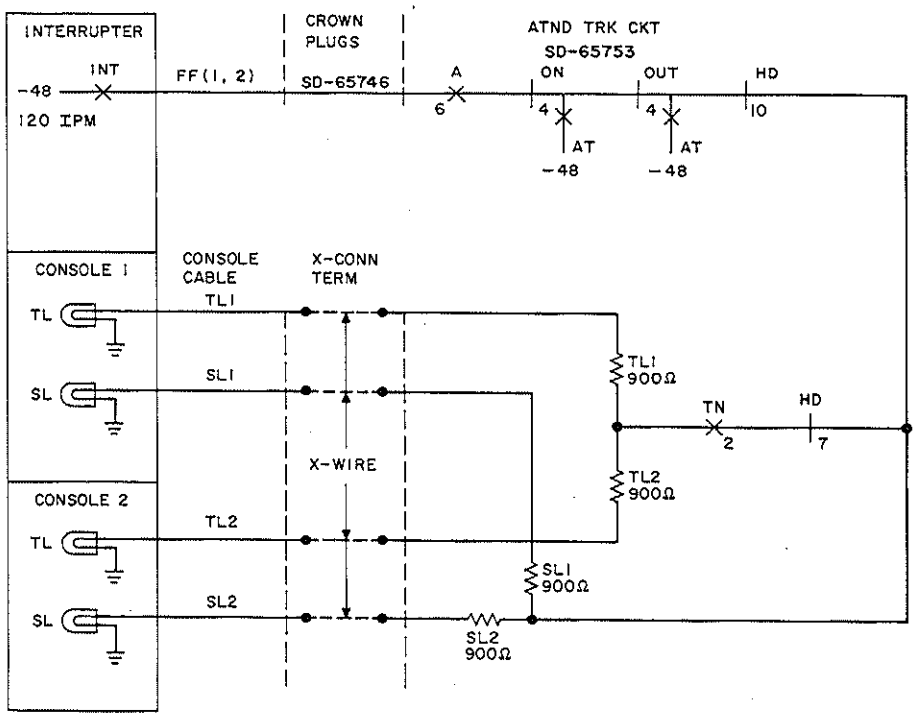

FIG. 6

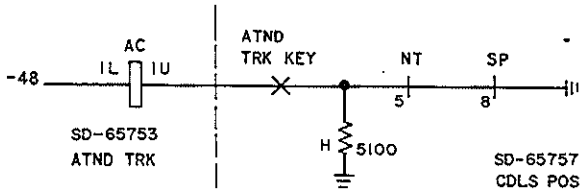

FIG. 7

CLEAR INTERCEPT TROUBLE (SD-65753)

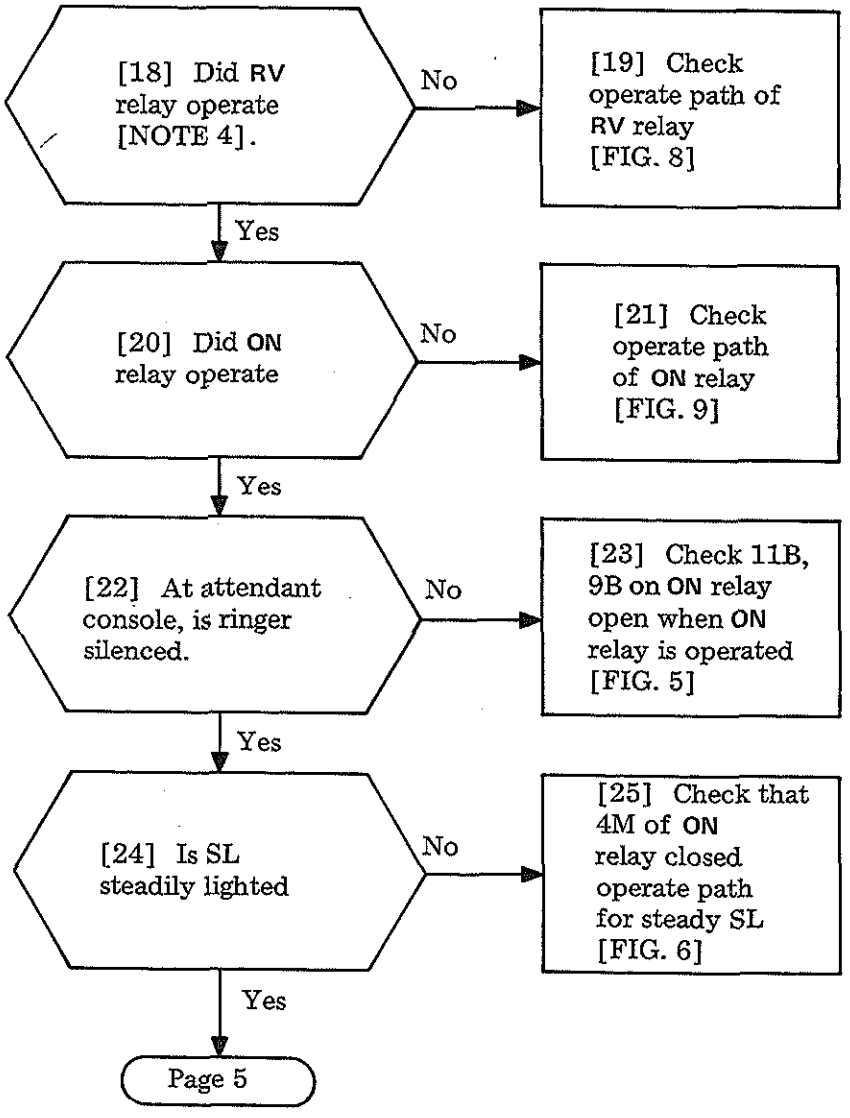

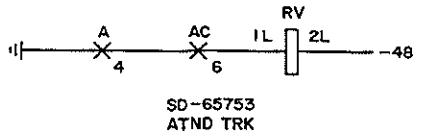

FIG. 8

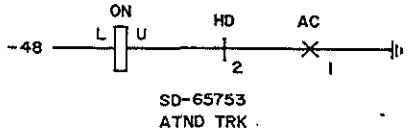

FIG. 9

NOTE 4
RV (reversing) relay provides reverse-battery supervision on calls from dial repeating tie trunks

CLEAR INTERCEPT TROUBLE (SD-65753)

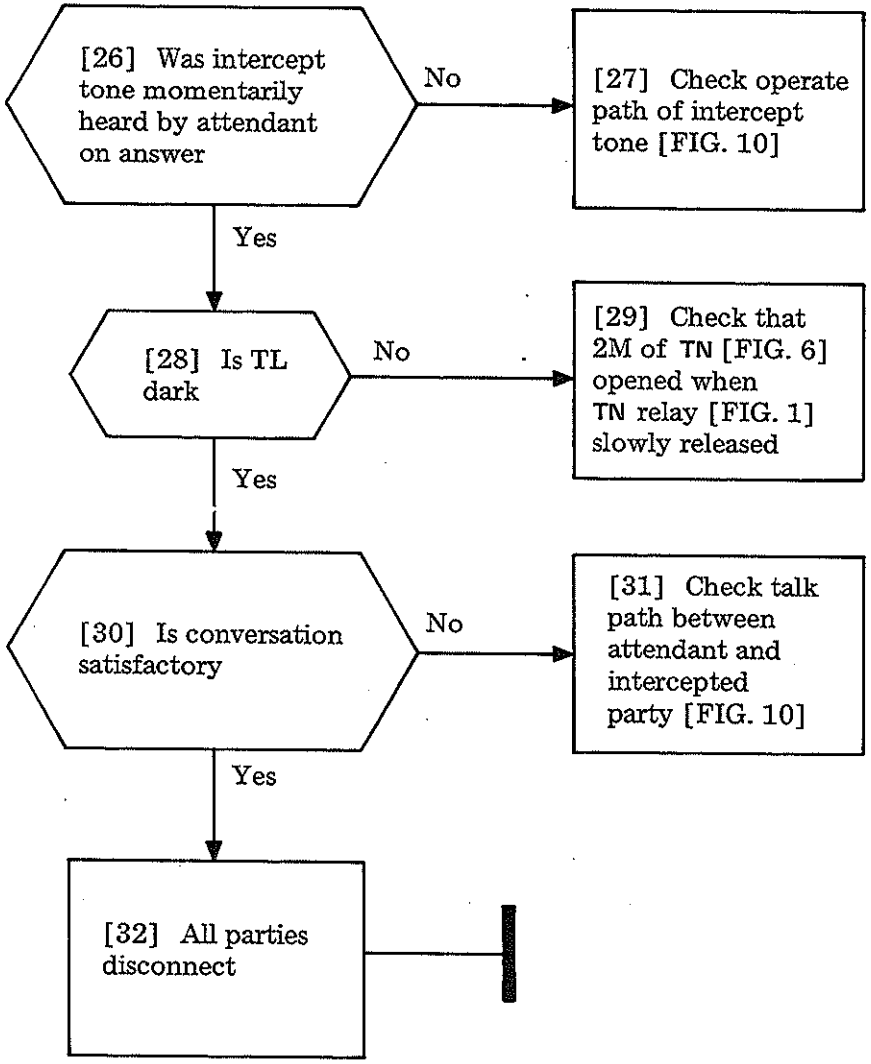

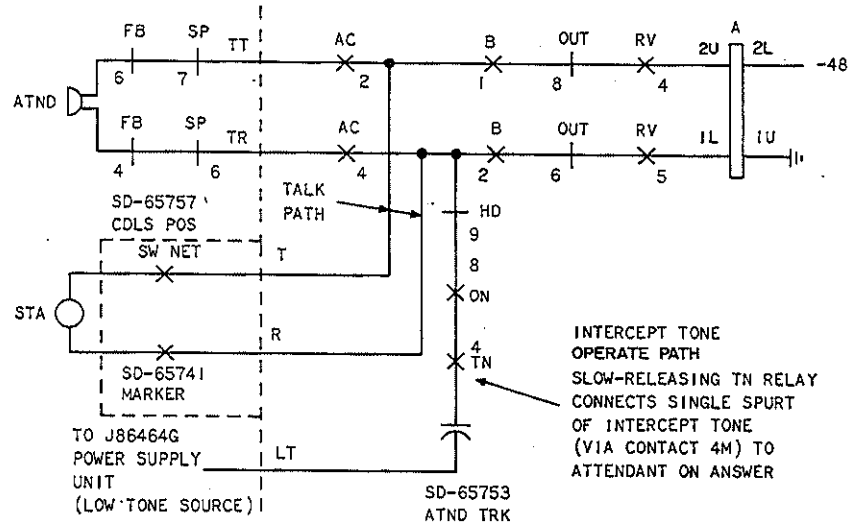

FIG. 10

CLEAR INTERCEPT TROUBLE (SD-65753)

SUMMARY

Locate the J58829S conference equipment unit (top of slide 2 or 3) so operation of relays A-E may be observed.

If trouble reported is failure to connect to a conference:

Via dial hand test set, call from terminals of test line 39 (slide 2).

- Dial the conference code (80 or 85)
- If relay A/E operates, block it operated.

Repeat test calls until all relays (A-E) have operated, or a failure-to-operate is observed.

If the trouble reported is "can't hear" (transmission):

- Dial the conference code from five idle stations
- Listen to conversation level, with full conference

If unsatisfactory, check both apparatus and wiring sides of unit for shorts, grounds, crosses, terminals touching, contacts dirty, etc.

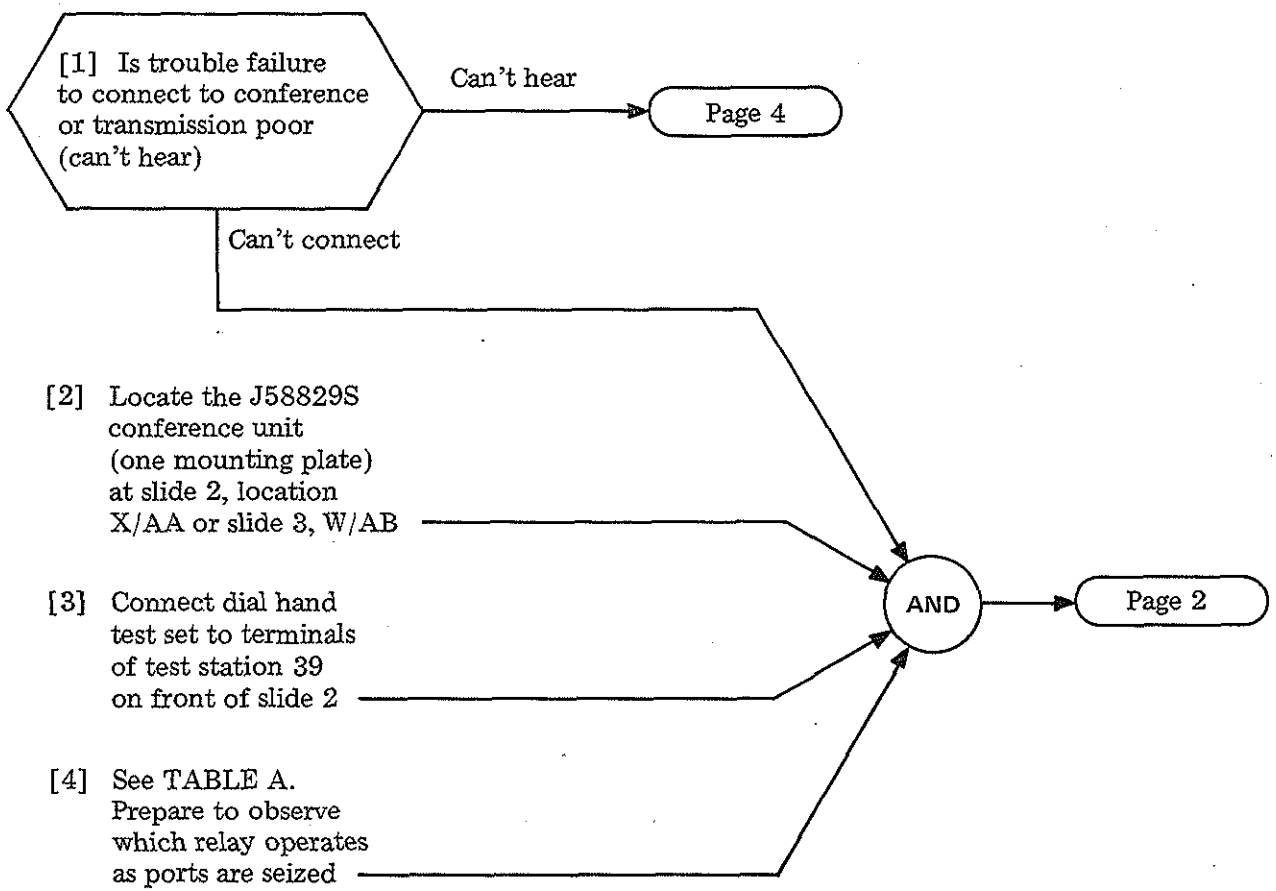

TABLE A		
PORT	REL	SLIDE 2, CSBR SW 2, LINE HOLD MAG NO.
*80	A	0
81	B	1
82	C	2
†83	D	3
84	E	4
*85	A	5
86	B	6
87	C	7
†88	D	8
89	E	9

* Stations dial to conference

† Trunk code. Prior to Issue 37B of SD-65741, fourth and fifth stations dialed trunk code to connect to conference.

CLEAR MEET-ME-TYPE CONFERENCE TROUBLE (SD-65745)

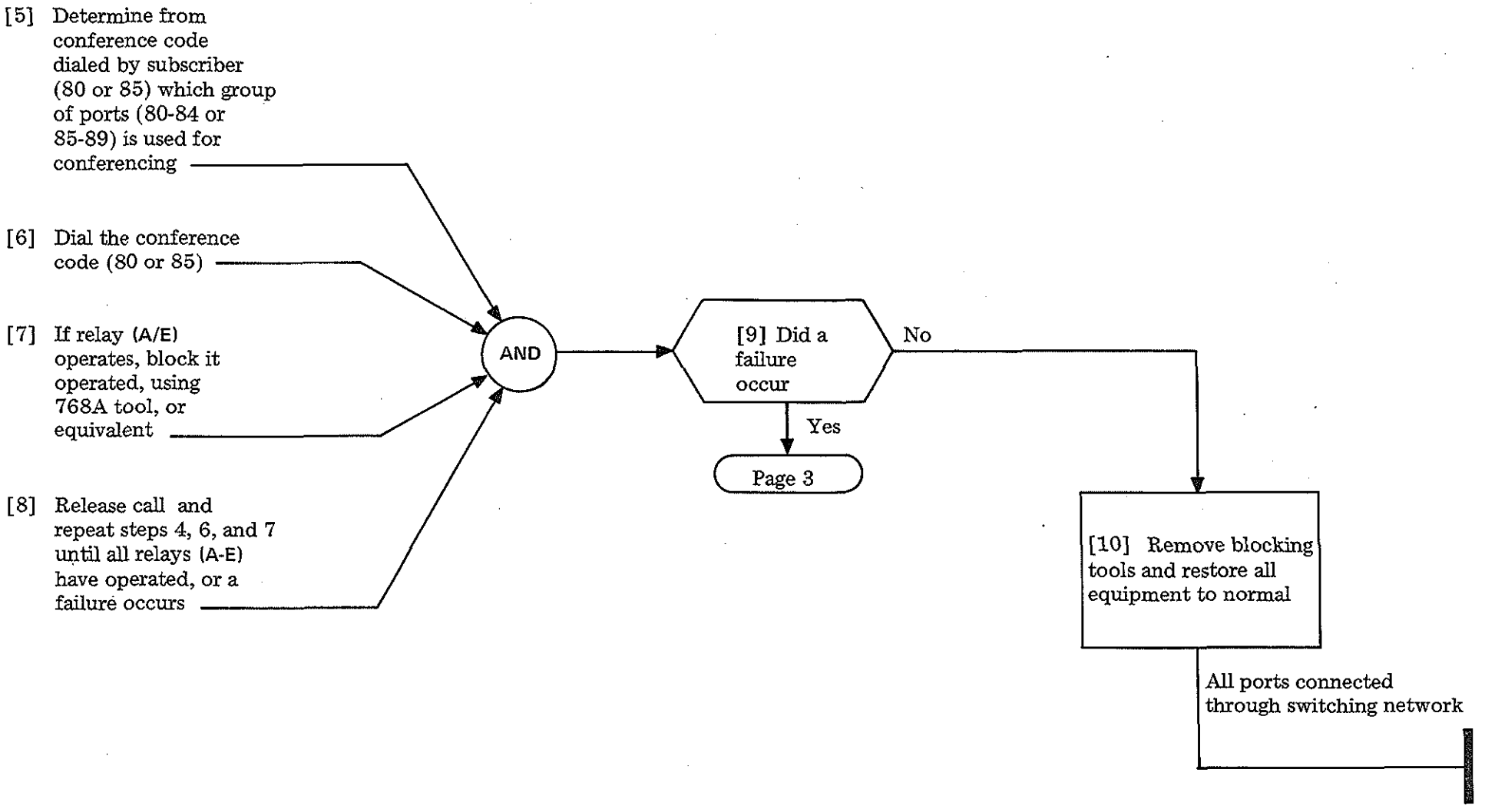
[5] Determine from conference code dialed by subscriber (80 or 85) which group of ports (80-84 or 85-89) is used for conferencing
[6] Dial the conference code (80 or 85)
[7] If relay (A/E) operates, block it operated, using 768A tool, or equivalent
[8] Release call and repeat steps 4, 6, and 7 until all relays (A-E) have operated, or a failure occurs
AND
[9] Did a failure occur
No
Yes
Page 3
[10] Remove blocking tools and restore all equipment to normal
All ports connected through switching network

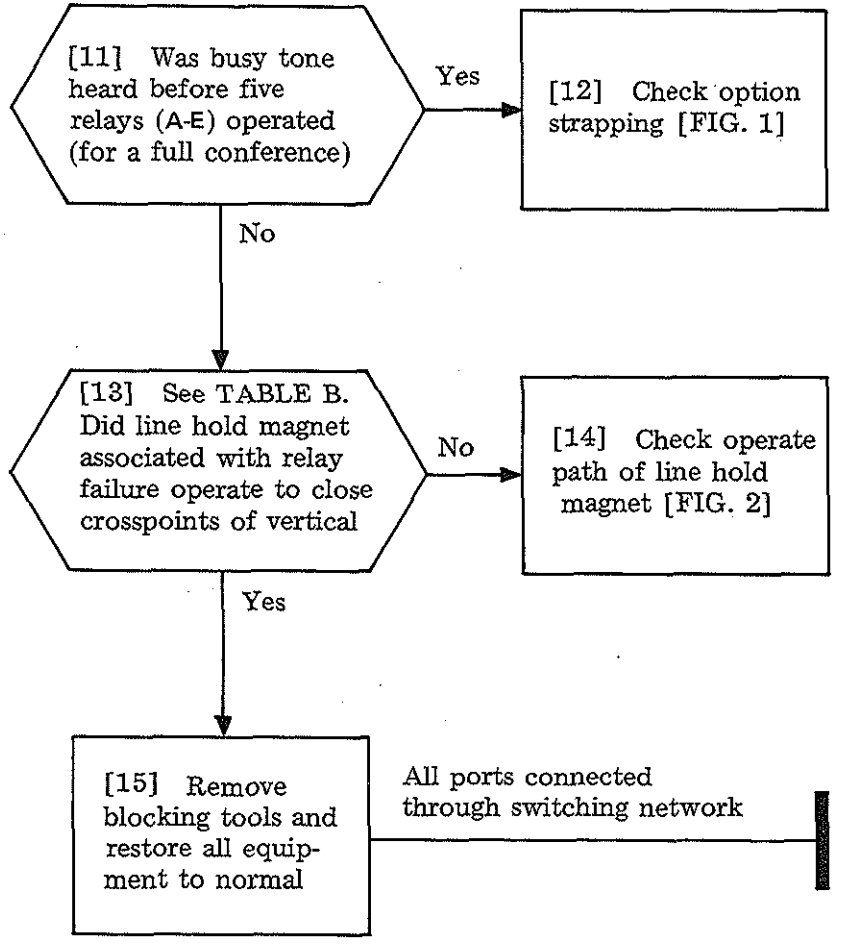

TABLE B		
PORT	REL	SLIDE 2, CSBR SW 2, LINE HOLD MAG NO.
*80	A	0
81	B	1
82	C	2
83	D	3
84	E	4
*85	A	5
86	B	6
87	C	7
†88	D	8
89	E	9

* Stations dial to conference
† Trunk code. Prior to Issue 37B of SD-65741, fourth and fifth stations dialed trunk code to connect to conference

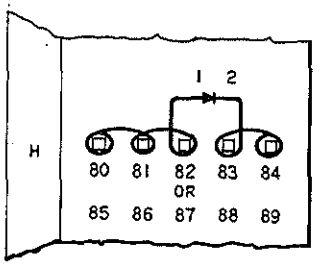

FIG. 1 — Part of TS A Located on Slide 2, Position N or P

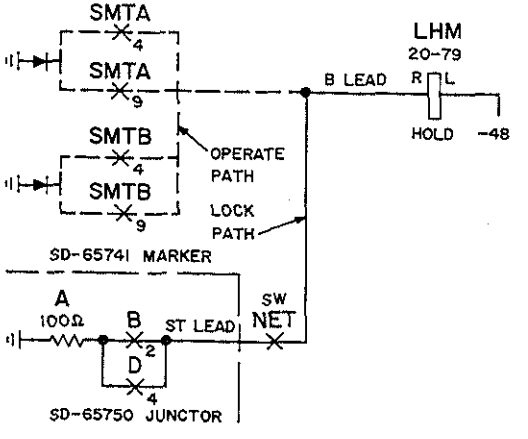

FIG. 2

CLEAR MEET-ME-TYPE CONFERENCE TROUBLE (SD-65745)

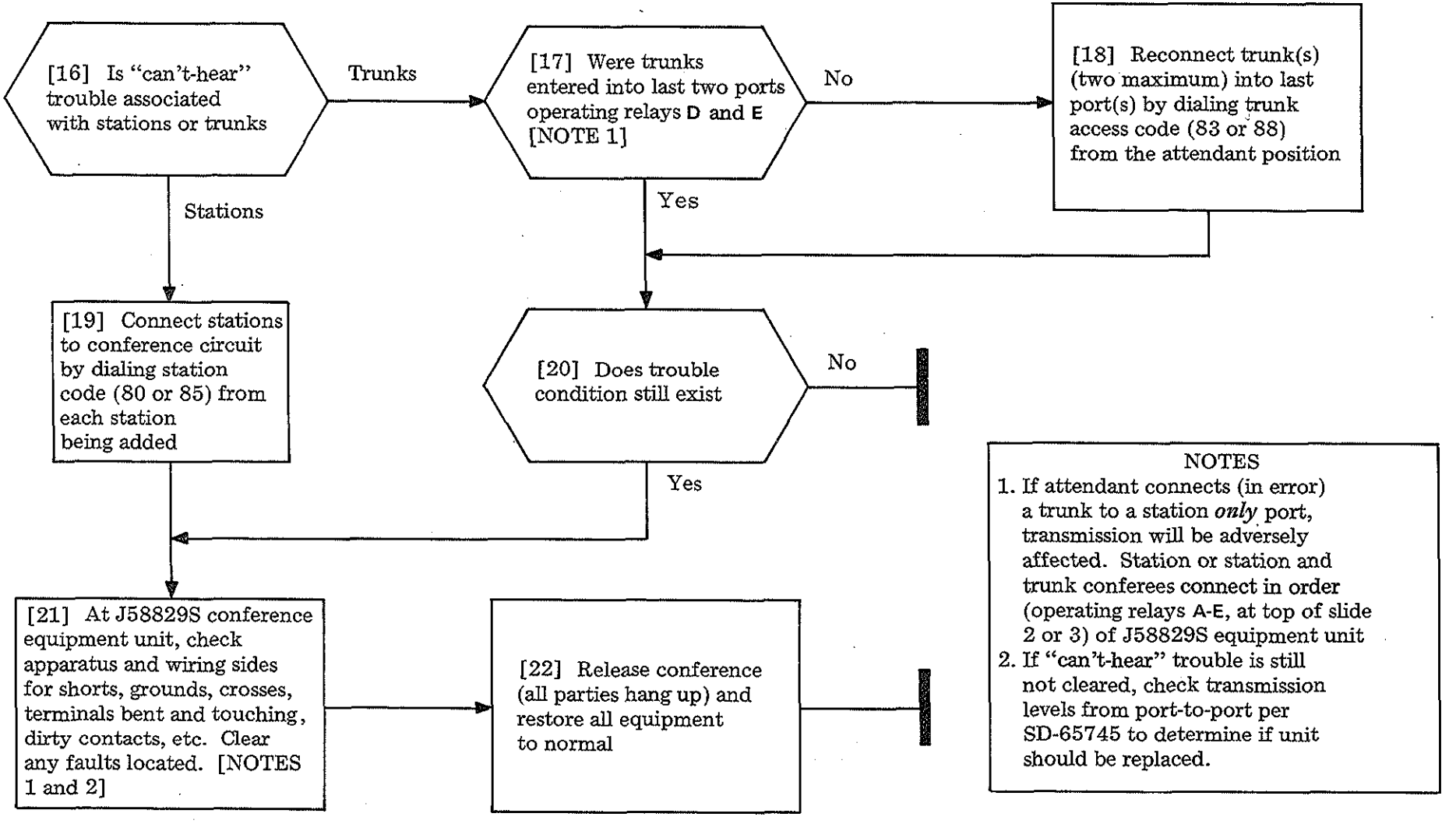

CLEAR MEET-ME-TYPE CONFERENCE TROUBLE (SD-65745)

START

[1] See NOTE. How many stations are affected

All station(s) → step 31

Individual stations → [2] See FIG. 1. Check for faulty components and contacts in DC path to clear trouble → [3] Has trouble been cleared

No → [1]

Yes → ||

All stations in one group → [4] Do lights remain on or off

Off → Page 2

On → [5] Are A and B switches set to N

No → [6] Set switch to N. Repeat step 3

Yes → [7] Check for shorted contacts in interrupter or switches [FIG. 2] → [8] Can unit be repaired without replacement

Yes → [9] Clear trouble and verify

No → step 60

NOTE
Group A includes stations 20 through 39 and stations 60 through 79. Group B includes stations 40 through 59

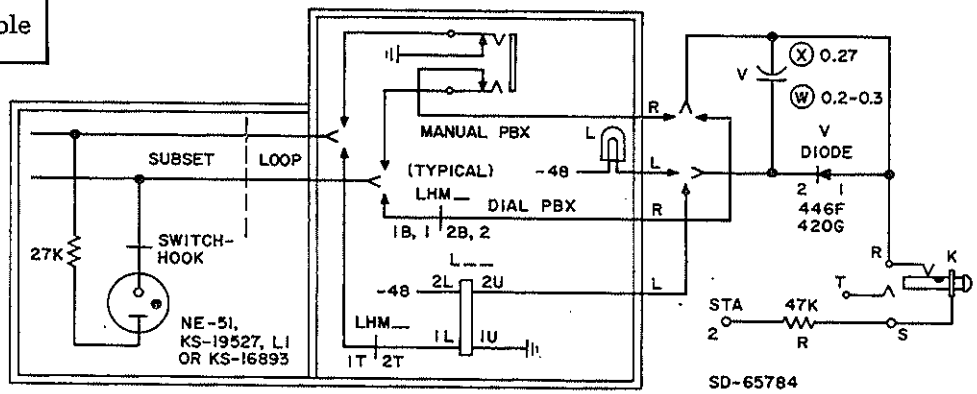

FIG. 1

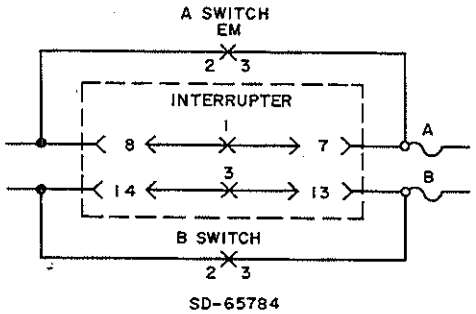

FIG. 2

Issue 1	May 1975
551-100-101	TAP
PAGE 1 of 5	143

CLEAR MESSAGE WAITING TROUBLE (SD-65784)

[10] Is A or B fuse operated

Yes → [11] Set AC switch to OFF → [12] Replace fuse and restore power → [13] Does fuse blow again

No → step 3

No → Page 3 step 25

Yes → AND

[14] Set AC switch to OFF → AND

[15] Connect ohmmeter to terminal 2 of group STA key and ground → AND

AND → [16] Is resistance less than 1500 ohms

No → [17] Fault isolation is beyond scope of this TAP. Refer to SD-65784 for assistance

Yes → [18] While observing meter, set message waiting keys to normal one at a time

[19] Does operation of one particular key remove low resistance

No → Page 3

Yes → [20] Find foreign ground in station DC path [FIG. 3]. Clear trouble and verify repair

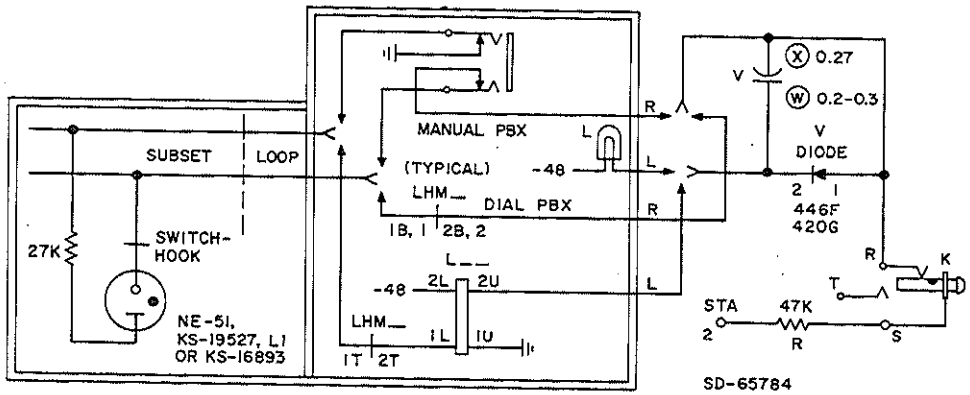

FIG. 3

Issue 1	May 1975
551-100-101	TAP
PAGE 2 of 5	143

CLEAR MESSAGE WAITING TROUBLE (SD-65784)

[21] Remove interrupter → [22] Does short disappear

No → [23] Reinstall interrupter → [24] Find foreign ground in DC path [FIG. 4]. Clear trouble and verify repair

Yes → step 60

[25] Set A or B (whichever group has fault) to EM

[26] Operate group FL key momentarily

AND → Group (A or B) lamp on momentarily

No → step 35

[27] Set AC switch to OFF to remove power

[28] Inspect and clean interrupter contacts in DC path of faulty group

[29] Restore power

AND → [30] Is trouble cleared

Yes

No → [35] Fault isolation is beyond scope of this TAP. Refer to SD-65784 for more information

[31] What kind of trouble

One group lights steadily, one group off → step 56

Both groups light steadily → [32] Verify A and B switches set to N → [33] Check for shorted contacts in interrupter → [34] Is interrupter faulty

No → [35]

Yes → step 60

Both groups off → Page 4

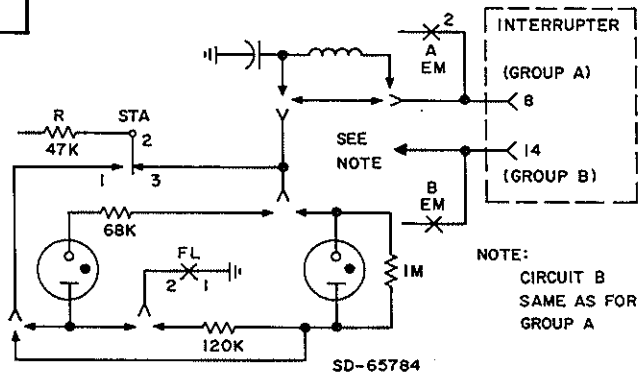

FIG. 4

CLEAR MESSAGE WAITING TROUBLE (SD-65784)

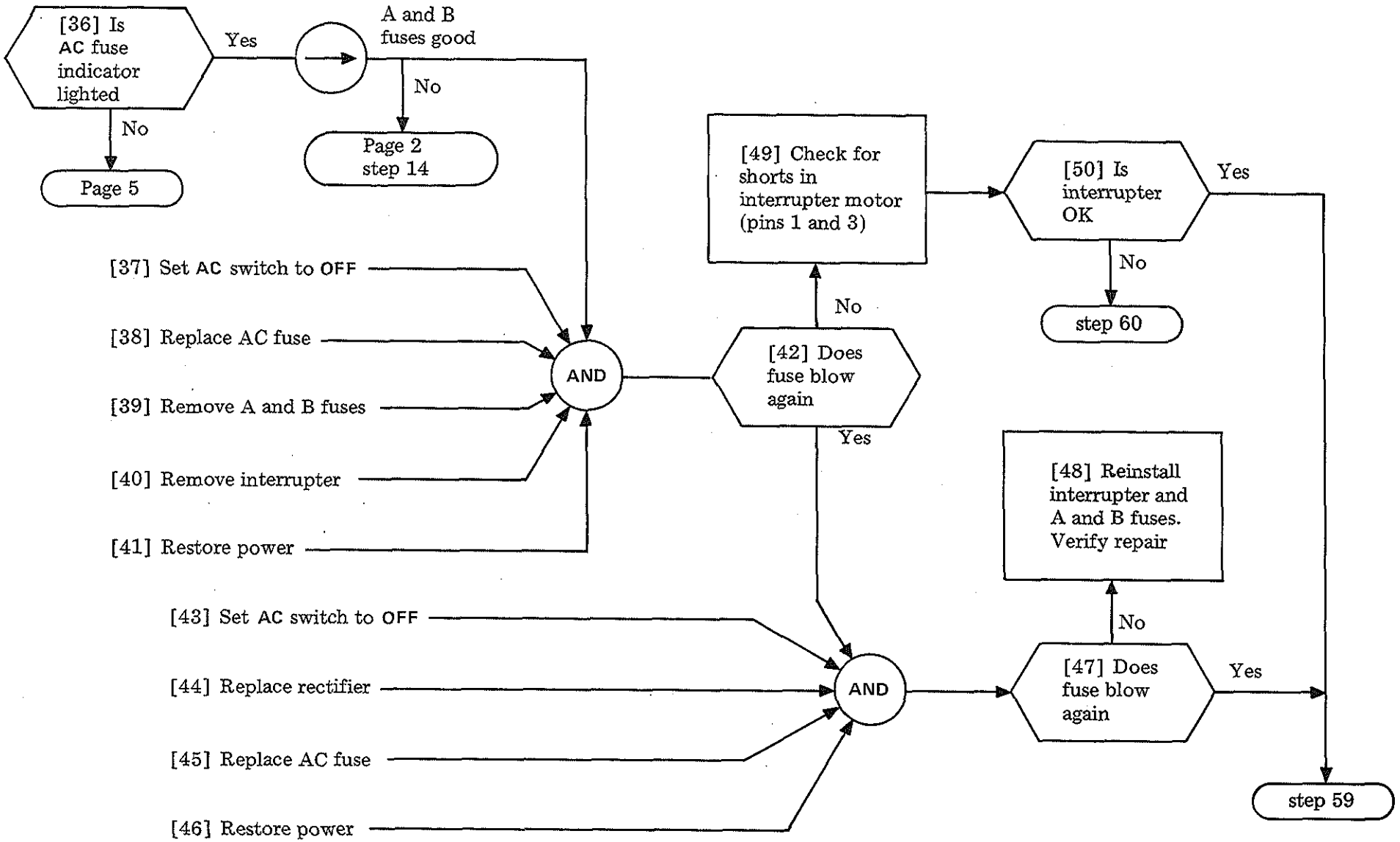

CLEAR MESSAGE WAITING TROUBLE (SD-65784)

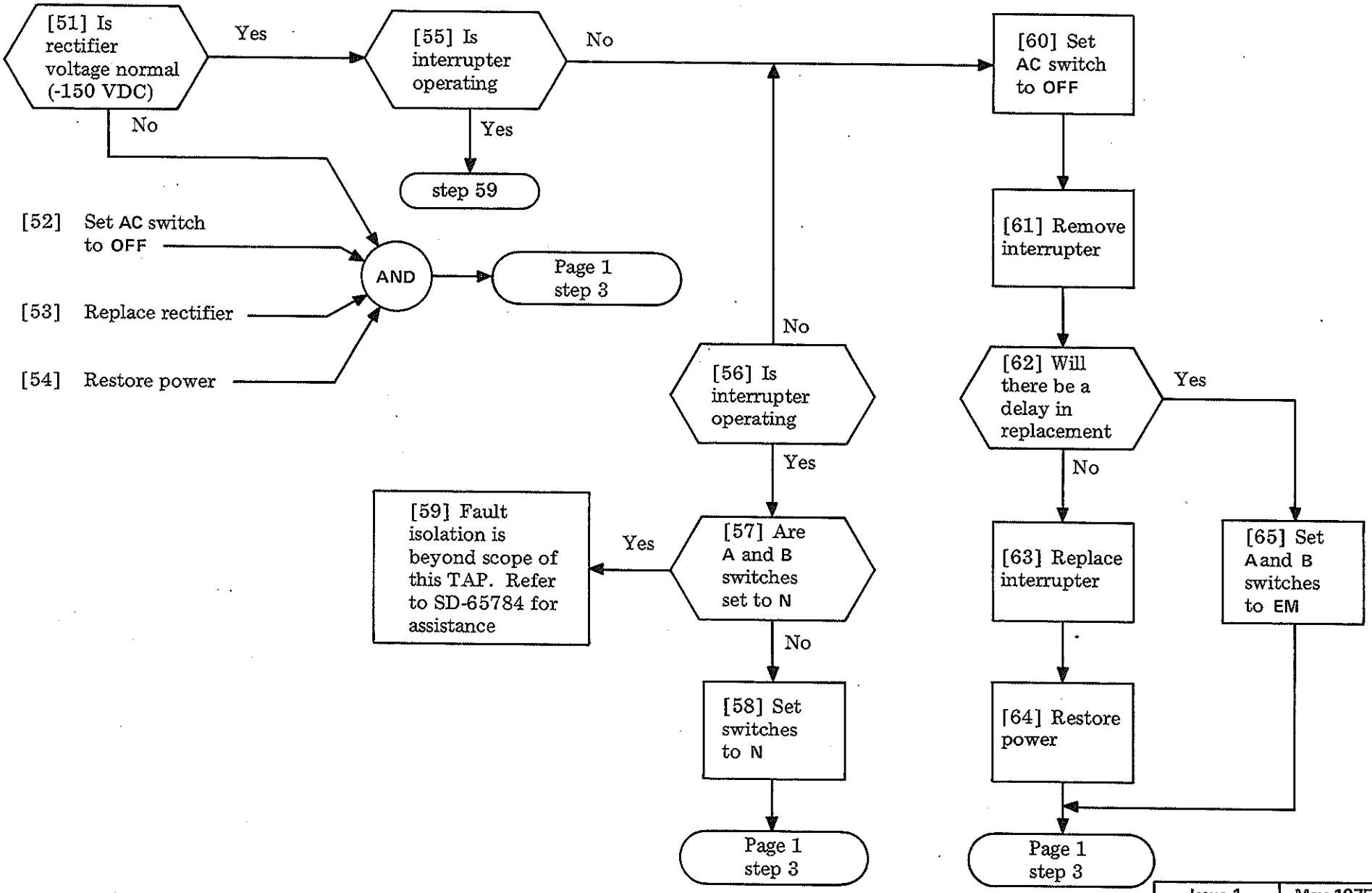

CLEAR MESSAGE WAITING TROUBLE (SD-65784)

SUMMARY

Determine whether fixed or flexible night service is provided [NOTE 1]. Analyze trouble report and customer-furnished information to see if trouble occurred:

- When attendant attempted to establish night service, or
- After night connections were set up.

Find if trouble involves:

- One trunk-to-station night connection, or
- All trunk-to-station night connections.

Set up same trunk-to-station connection(s) and find the fault via this procedure, or reference given. Equipment and relay locations are given by slide and mounting plate position. For example, BCO (1X) means **BCO** relay is in slide 1 on plate X.

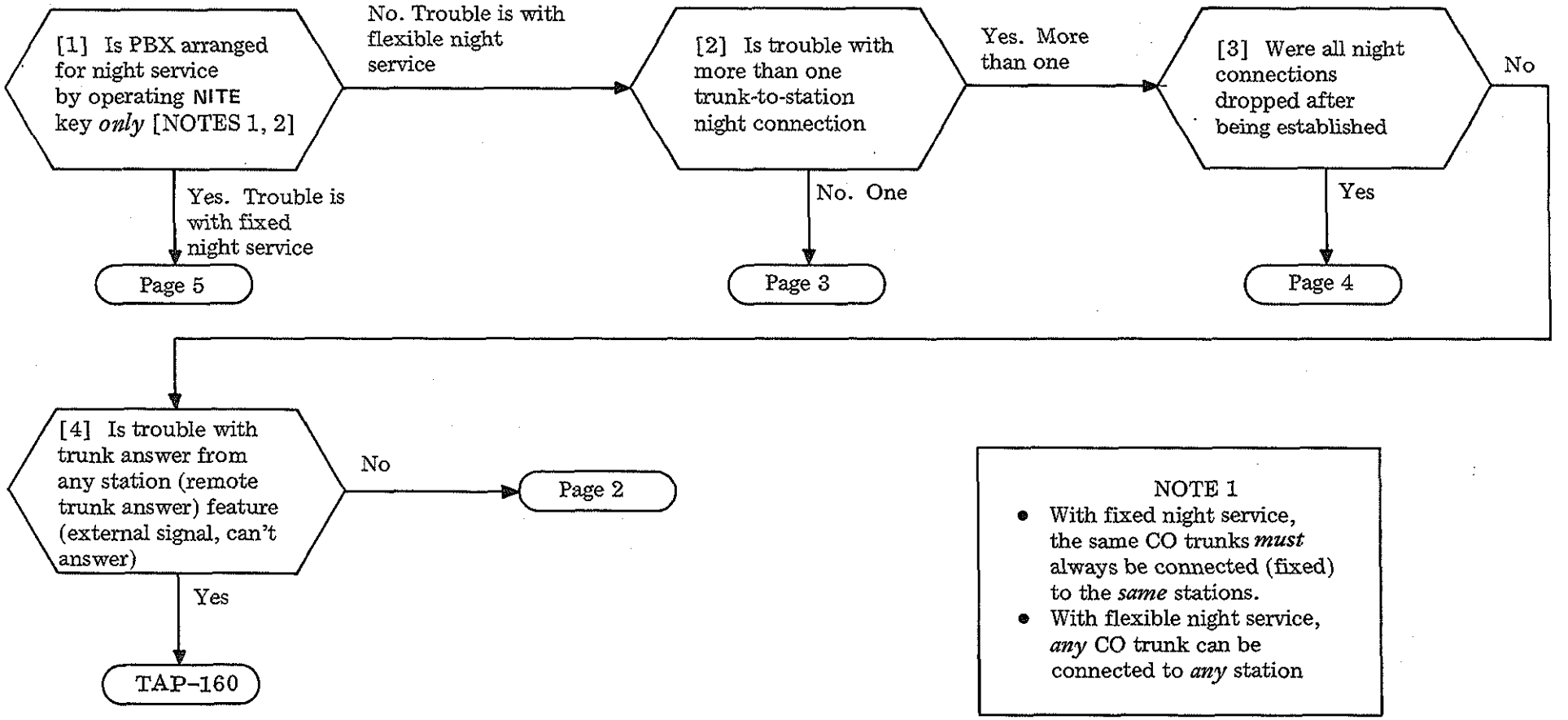

NOTE 1

- With fixed night service, the same CO trunks *must* always be connected (fixed) to the *same* stations.
- With flexible night service, *any* CO trunk can be connected to *any* station

CLEAR NIGHT SERVICE TROUBLE

[5] Verify (and/or attempt to setup) all flexible night connections per NOTE 2

[6] Did relays **NS** (night service—5J) and **BCO** (battery cutoff—1X) *release*

No → [7] Check *release* path of **NS** and **BCO** relays (via break contact of **NITE** key) per FIG. 1

Yes ↓

[8] Is night service established satisfactorily

No → [9] Check for ground to CO trunk(s) via NSO, NSE lead(s) [FIG. 2]

Yes. Flexible night service established

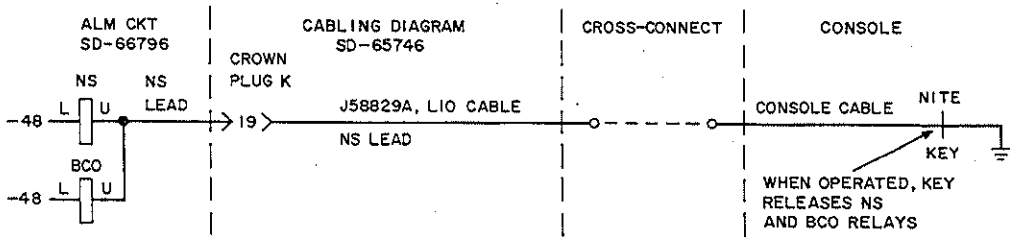

FIG. 1

NOTE 2

Flexible night service is set up by the following method:

1. Operate **NITE** key
2. Operate CO trunk key
3. With direct station selection (DSS) — operate DSS key
   Without DSS — operate **HOLD** key and dial or TOUCH-TONE® call station
4. Operate **RLS** (release) key
5. Unplug handset or headset

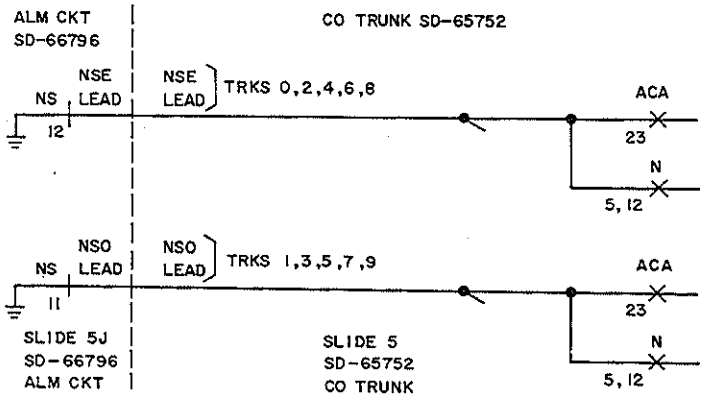

FIG. 2

CLEAR NIGHT SERVICE TROUBLE

[10] Verify (and/or attempt to set up flexible night connection using CO trunk associated with trouble [NOTE 3]

[11] Did N1 (auxiliary night service) relay associated with CO trunk in trouble operate and release

No → [12] Check operate path of N1 relay [FIG. 3 and TABLE A] (station ringer heard)

Yes

[13] Is N (night service) relay associated with CO trunk in trouble operated

No → [14] Check operate, lock path(s) of N relay [FIG. 4]

Yes

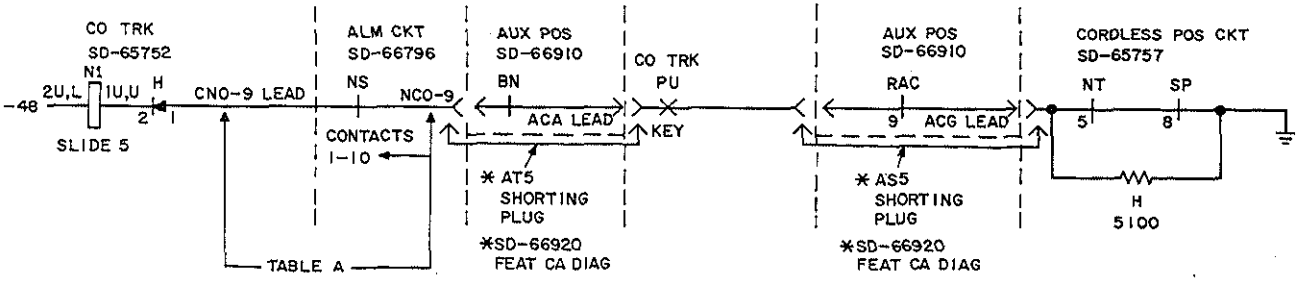

FIG. 3

NOTE 3

Flexible night service is set up by the following method:

1. Operate NITE key
2. Operate CO trunk key
3. With direct station selection (DSS) — operate DSS key
   Without DSS — operate HOLD key and dial or TOUCH-TONE® call station

TABLE A		
NS REL CONT	NC 0–9 LEADS	CN 0–9 LEADS
1	0	0
2	1	1
3	2	2
4	3	3
5	4	4
6	5	5
7	6	6
8	7	7
9	8	8
10	9	9

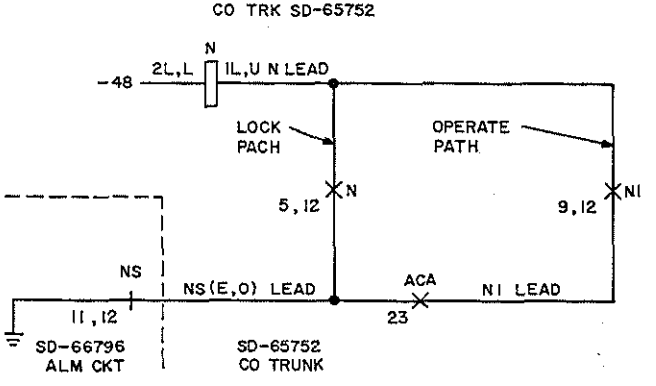

FIG. 4

CLEAR NIGHT SERVICE TROUBLE

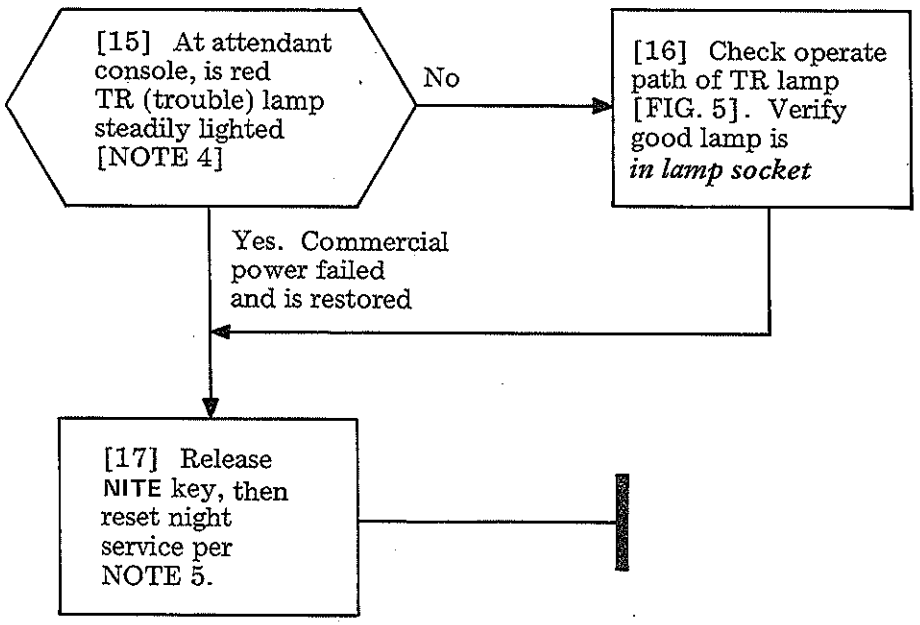

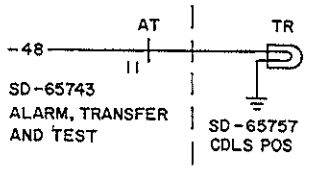

FIG. 5

NOTE 5

Flexible night service is set up by the following method:

1. Operate NITE key
2. Operate CO trunk key
3. With direct station selection (DSS) — operate DSS key
   Without DSS — operate HOLD key and dial or TOUCH-TONE® call station
4. Operate RLS (release) key
5. Unplug handset or headset

NOTE 4

Flexible CO trunk-to-station night connections drop when commercial power (117V ac) fails for more than a few seconds. They are ***not*** reconnected when commercial power is restored. Lighted TR lamp notifies attendant (***not*** equipment trouble)

[18] At attendant console, is **NITE** key operated

No → [19] Operate **NITE** key

Yes

[20] Did **NS** (night service—located 5J) and **BCO** (battery cutoff—located 1X) relays *release*

No → [21] Check *release* path of **NS** and **BCO** relays (via break contact of **NITE** key) per FIG. 6.

Yes

[22] Are **AT** (2L), **ATA** (5J) (and **AT1** [1X], **ATA1** [1X], if provided) relays *released* [NOTE 6]

No → [23] Check *release* path of **AT**, **ATA**, (and **AT1**, **ATA1**, if provided) relays via 12M of released **NS** relay [FIG. 7]

Yes → Page 6

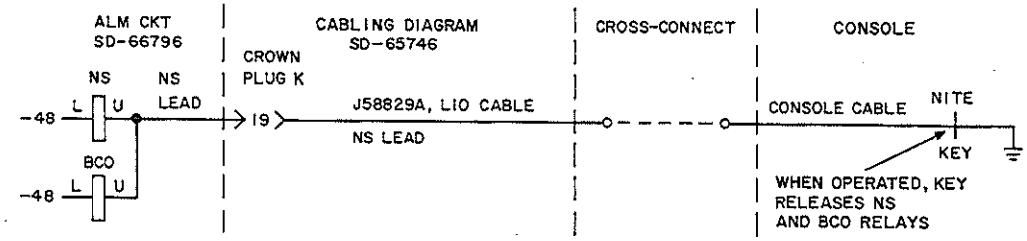

FIG. 6

NOTE 6
AT_ (automatic transfer) relays normally release only on power failure, or when **NITE** key is used to set up fixed night connections

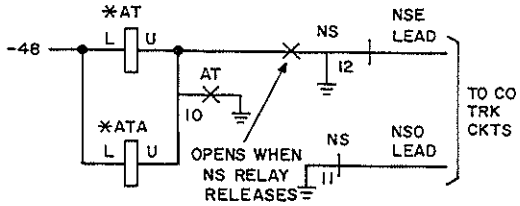

* FOR STATIONS 30-32 OR 30-33

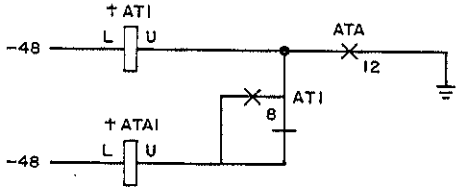

† WHEN PROVIDED (FOR STA 40, 41, AND 42).

SD-65743
SD-66796
ALARM, TRANSFER AND TEST

FIG. 7

CLEAR NIGHT SERVICE TROUBLE

[24] Clean contacts, check alignment of all wire springs associated with failure [NOTE 6, FIG. 8, and TABLE B]

NOTE 7
Break contacts of AT_ or AT__ relays connect CO trunks 0—3 to stations 30—33. Optionally, CO trunks 0—2, 5—7 may connect to stations 30—32, 40—42. A night station must momentarily operate a nonlocking key (551A, typical) to get CO dial tone

[25] Is trouble night station can be called (via CO) but can't call out

Yes → [26] Check for SG— ground on nonlocking key [FIG. 8]

No

[27] Are fixed night connections satisfactory

No → TAP-152 step 6

Yes. Fixed night service connected

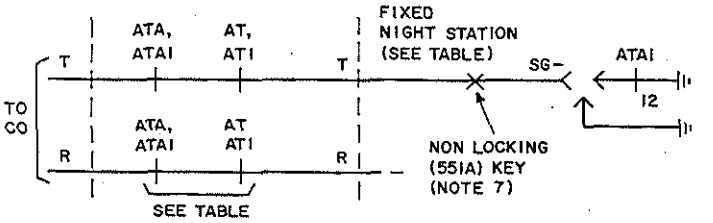

FIG. 8

TABLE B									
FIXED NIGHT CONN		VIA REL, LD, & CONT							
FROM STA	TO CO TRK	AT		ATA		AT1		ATA1	
		T	R	T	R	T	R	T	R
30	0	1B	2B	1B	2B				
31	1	4B	5B	3B	4B				
32	2	7B	8B	5B	6B				
33*	5*	10B*	11B*	7B*	8B*				
40†	5†					5B	6B	5B	6B
41†	6†					3B	4B	3B	4B
42†	7†					1B	2B	1B	2B

* Early versions only
† When provided

SUMMARY

Temporarily disconnect telephone company wiring at interface (eg, 42-type connecting block) to input of customer's amplifier.

- Connect tone to tip and ring of wire disconnected.
- Locate J58829W loudspeaker paging unit (single mounting plate, near top of slide 2 or 3)

Via dial hand test set connected to terminals of test line 39 at slide 2;

- Dial paging code, and/or
- Ask attendant to listen for tone after operating PAGE key.

If A relay operates and tone is heard clearly, fault is in customer-provided wiring or equipment; otherwise, find the fault using this procedure.

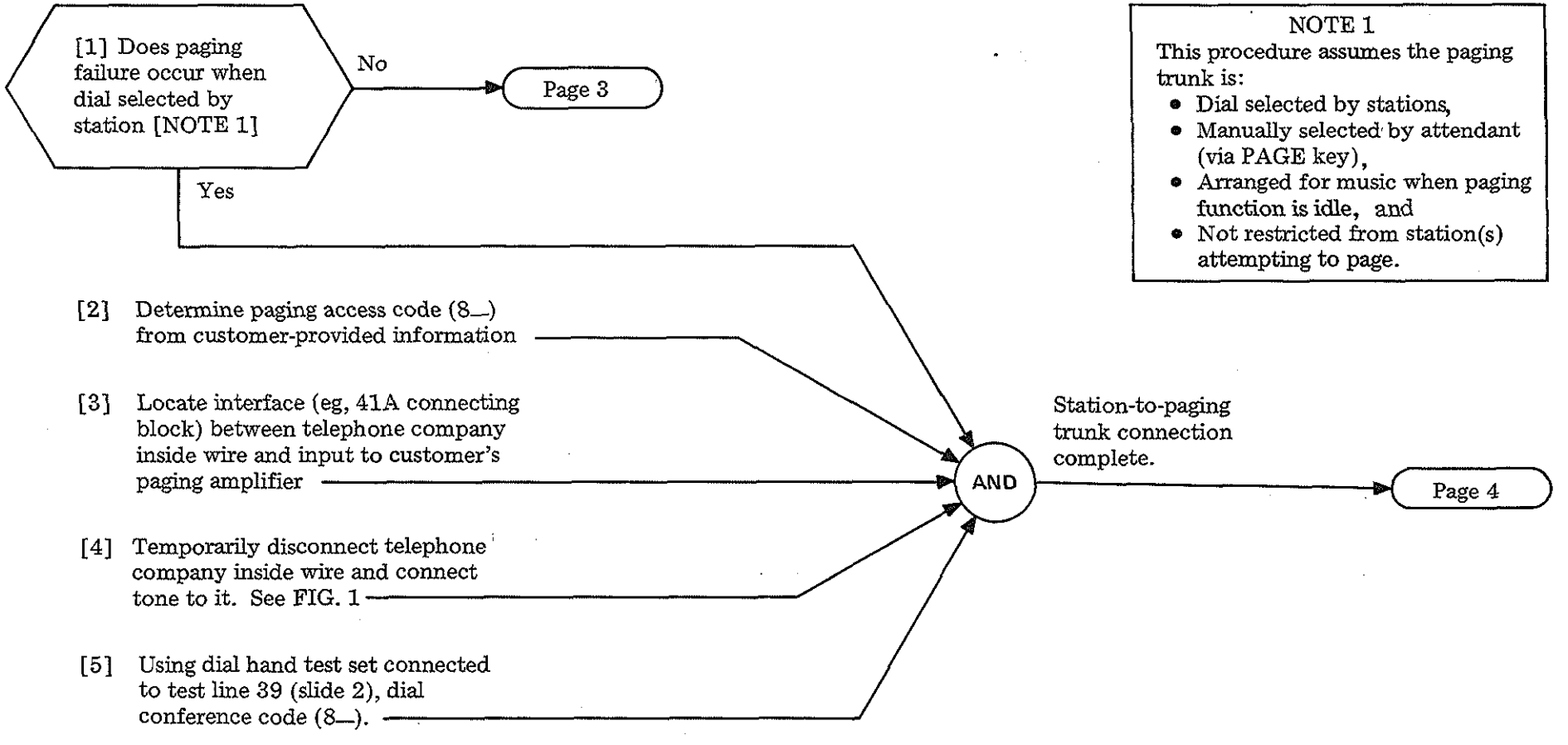

NOTE 1

This procedure assumes the paging trunk is:

- Dial selected by stations,
- Manually selected by attendant (via PAGE key),
- Arranged for music when paging function is idle, and
- Not restricted from station(s) attempting to page.

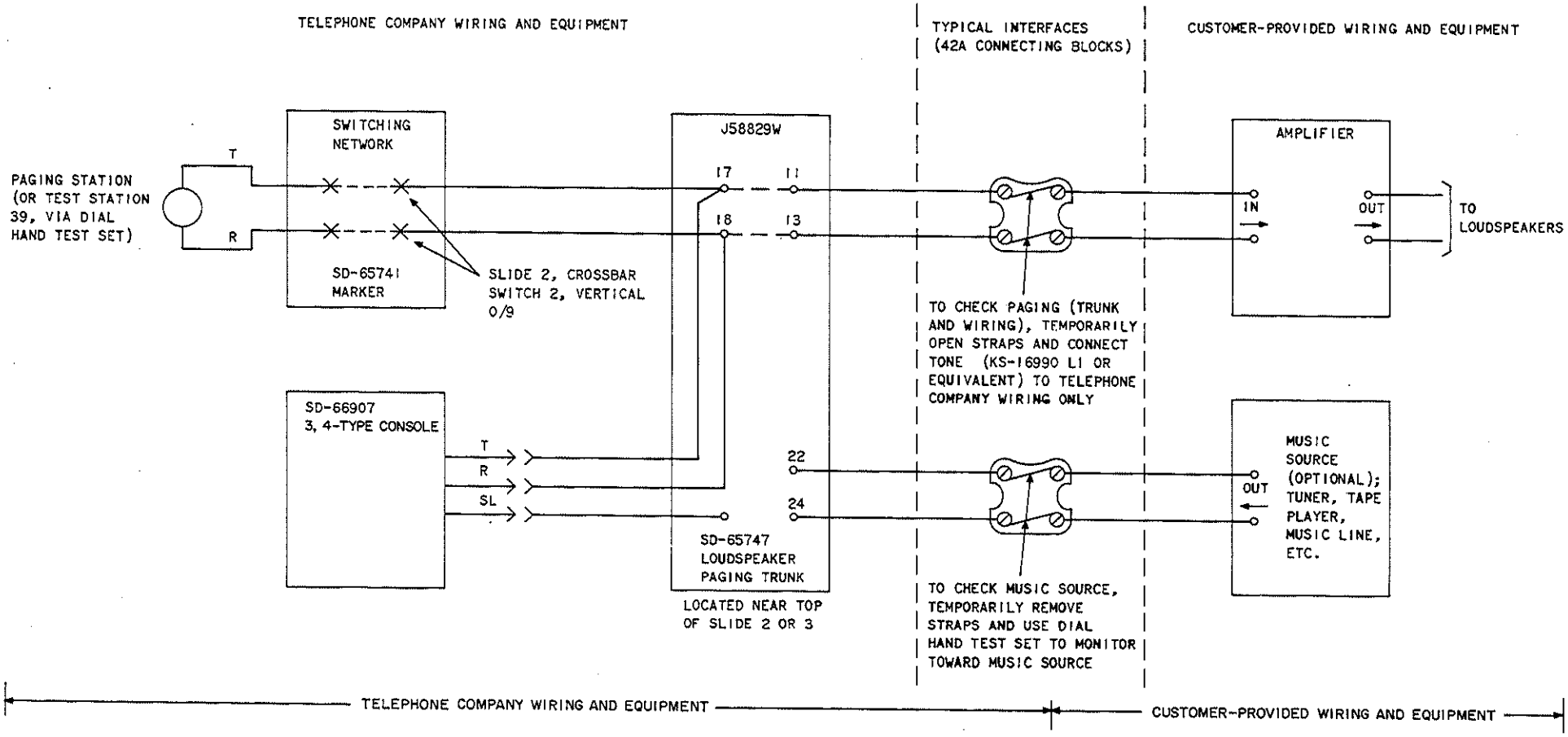

FIG. 1

CLEAR PAGING TROUBLE (SD-65747)

[6] Is trouble with manual paging from attendant console or no music (when *not* paging [NOTE 1]

No music → Page 5

Manual paging ↓

[7] Does station lamp (SL) associated with PAGE key light during paging

No → [8] Check operate path of SL [FIG. 2]

Yes ↓

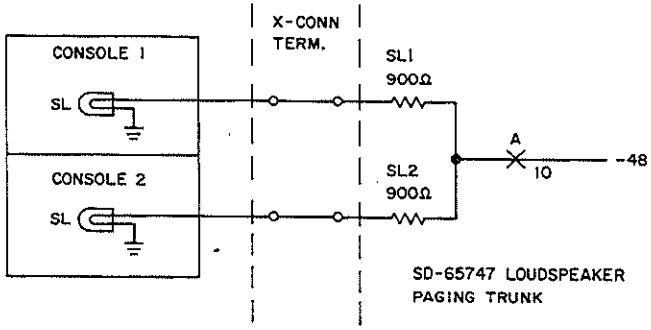

FIG. 2

[9] Locate interface (eg, 42A connecting block) between telephone company inside wire and input to customer's paging amplifier.

[10] See FIG. 1. Temporarily lift straps to amplifier input and connect tone to telephone side of connecting block.

[11] At attendant console, operate PAGE key and listen for tone.

AND → Console in PAGE mode → Page 4

CLEAR PAGING TROUBLE (SD-65747)

[12] Is tone heard by paging party (attendant and/or station)

Yes → [13] Restore all wiring and equipment to normal. Notify customer there is no trouble in telephone company wiring or equipment → Paging (tone) path clear

No → [14] Locate J58829W loudspeaker paging trunk equipment unit (near top of slide 2 or 3)

[15] Did A relay operate

No → [16] Check operate path of A relay [FIG. 3]

Yes → [17] Check tone (paging) path [FIG. 4] and restore all wiring and equipment to normal → Paging (tone) path clear through telephone company wiring and equipment

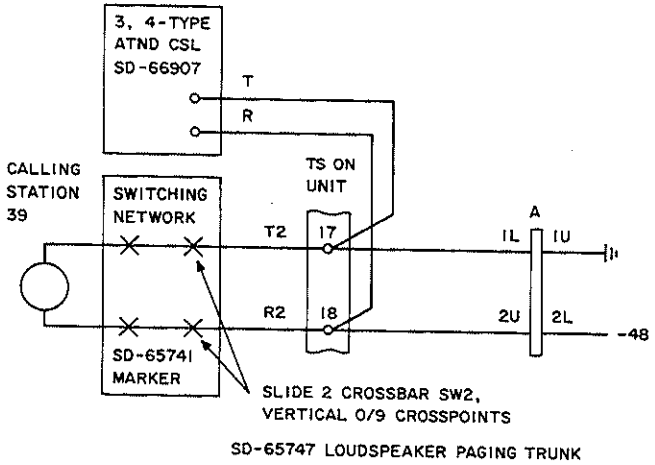

FIG. 3

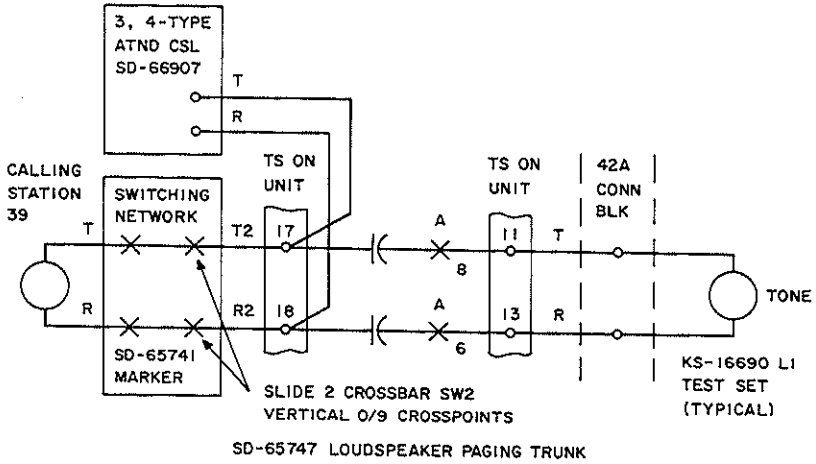

FIG. 4

CLEAR PAGING TROUBLE (SD-65747)

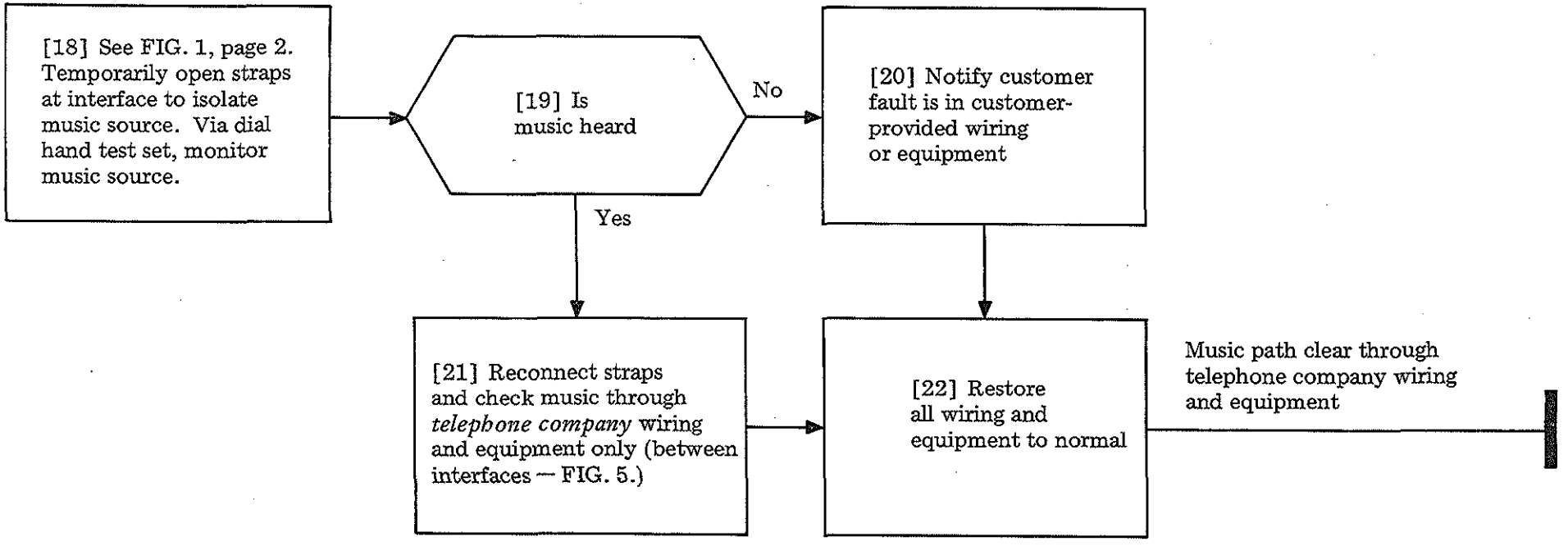

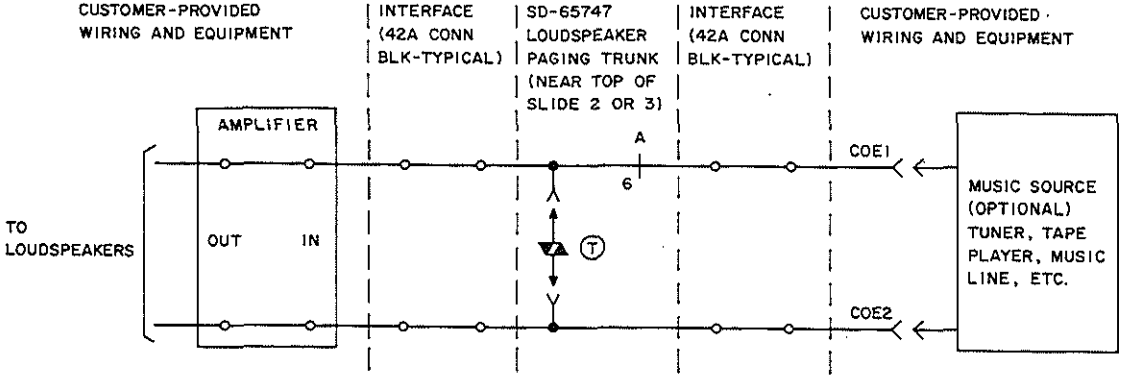

FIG. 5

CLEAR PAGING TROUBLE (SD-65747)

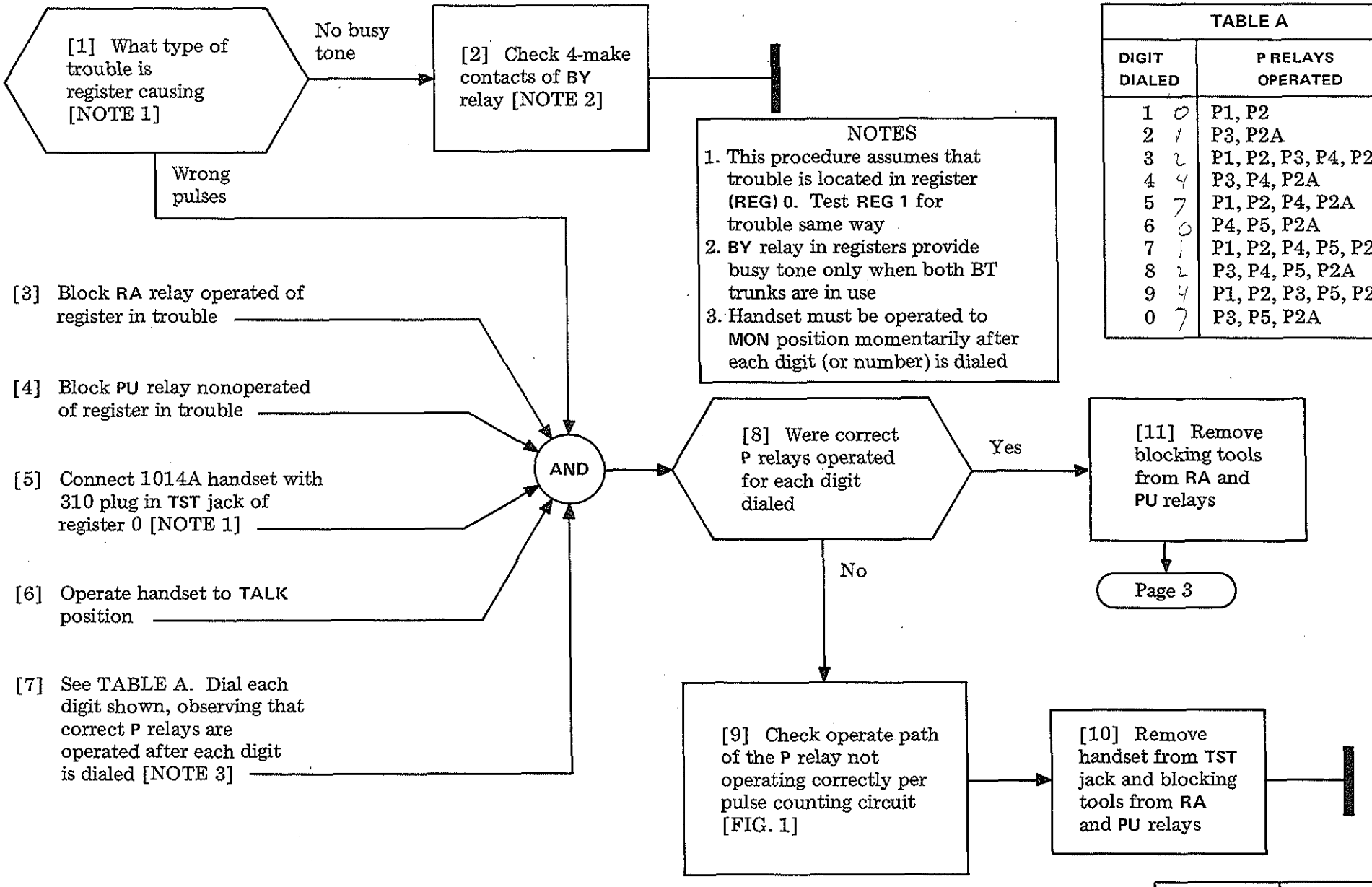

TABLE A

DIGIT DIALED	P RELAYS OPERATED
1 0	P1, P2
2 1	P3, P2A
3 2	P1, P2, P3, P4, P2A
4 4	P3, P4, P2A
5 7	P1, P2, P4, P2A
6 0	P4, P5, P2A
7 1	P1, P2, P4, P5, P2A
8 2	P3, P4, P5, P2A
9 4	P1, P2, P3, P5, P2A
0 7	P3, P5, P2A

CLEAR DIAL PULSE REGISTER TROUBLE (SD-65742)

PULSE COUNTING

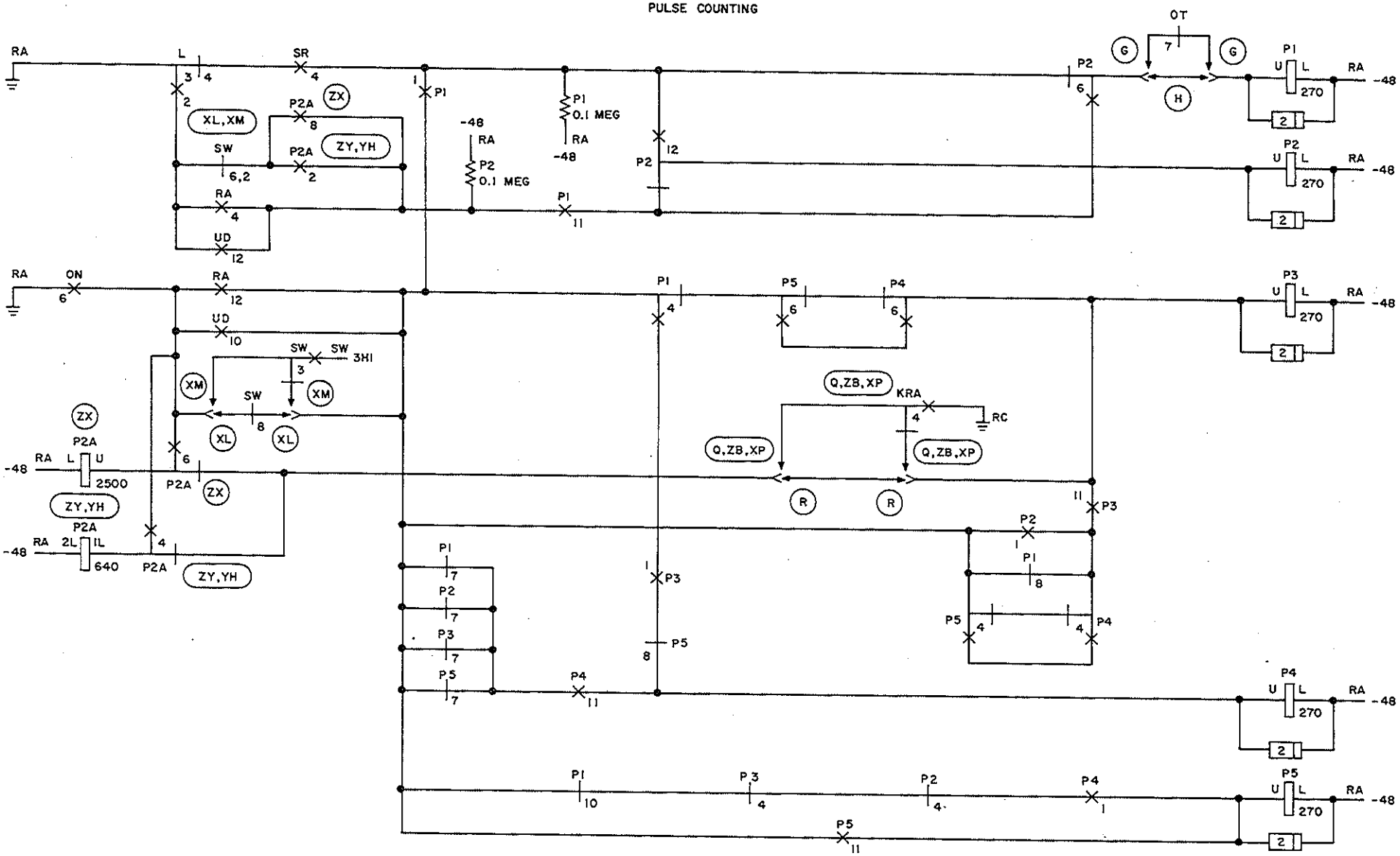

FIG. 1

CLEAR DIAL PULSE REGISTER TROUBLE (SD-65742)

Issue 1	May 1975
551-100-101	TAP
PAGE 2 of 4	146

[12] See CAUTION
Connect one KS-16751, L1 indicator [FIG. 2] on **TD (1–5)** relay and one KS-16751, L1 indicator on **UD (1–5)** relay

[13] Insert KS-6278 connector clip [FIG. 3] into 360A plug of indicator power (893) cord and connect to **–48V** test battery terminal (slide 6)

[14] Check tens and units digits registration by dialing numbers 21—25 and observing lamps per TABLE B [NOTE 3]

[15] Move KS-16751 indicator on **UD (1–5)** relay to **UD (6–0)** relay

[16] Repeat step 12, dialing numbers 26—20 and observing lamps per TABLE B

CAUTION
Connect KS-16751 indicator to center row only of relay contacts

AND → Page 4

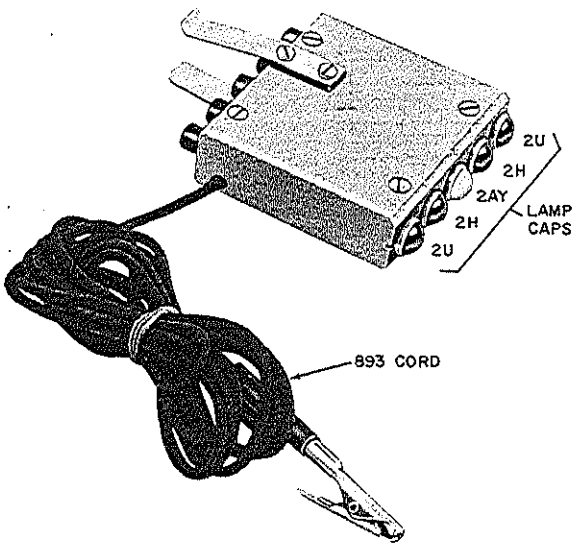

FIG. 2

FIG. 3

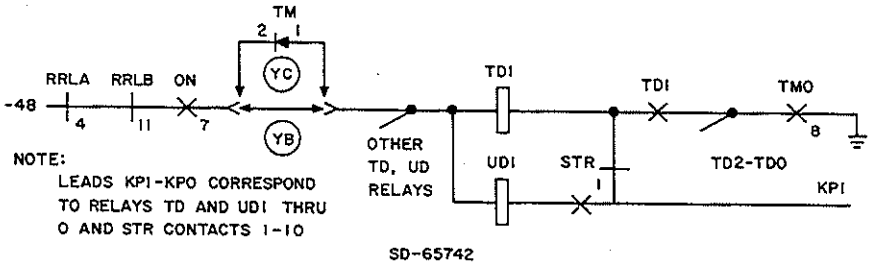

FIG. 4

Issue 1	May 1975
551-100-101	TAP
PAGE 3 of 4	146

[17] Dial tens digits 3, 4, 5 observing lamps per TABLE B

[18] Move KS-16751 indicator from on TD(1–5) relay to TD(6–0) relay

[19] Dial tens digits 6, 7, 8, 9, 0 observing lamps per TABLE B

[20] Were correct tens and units registration indicated

No → [21] Check operate path of TD and UD relays not showing correct registration [FIG. 4]

Yes → [22] Check for transient trouble caused by sticking contact of TD or UD relay

[23] Disconnect KS-16751 indicator cord from –48V battery and remove indicators from TD and UD relays

[24] Disconnect handset from TST jack

AND

TABLE B		
NUMBER DIALED	LAMPS LIGHTED ON KS-16751 INDICATORS	
	TD RELAY	UD RELAY
21	1	0
22	1	1
23	1	2
24	1	4
25	1	7
26	1	0
27	1	1
28	1	2
29	1	4
20	1	7
3(1-0)	2	Same as UD lamps indicated for 21-20 numbers
4(1-0)	4	
5(1-0)	7	
6(1-0)	0	
7(1-0)	1	
8(1-0)	2	
9(1-0)	4	
0(1-0)	7	

* The "4" lamp may also light; this does *not* indicate trouble.

CLEAR DIAL PULSE REGISTER TROUBLE (SD-65742)

SUMMARY

Initiate test call(s) from single station or trunk in trouble, or from test station 39 when PBX dial tone fails on entire system, or fails intermittently on more than one station or trunk. Connection of either dial pulse register to the switching network may be seen by observing the operation of the work hold magnet (vertical 8), which connects an idle register to the same link as the circuit requesting PBX dial tone. See CAUTION. If customer requirements permit, a register may be busied out either to isolate the defective register or to prevent seizure while a fault is being repaired. Repeat test calls until both registers have been checked for PBX dial tone. If a failure occurs, locate the fault using the figure or other reference given.

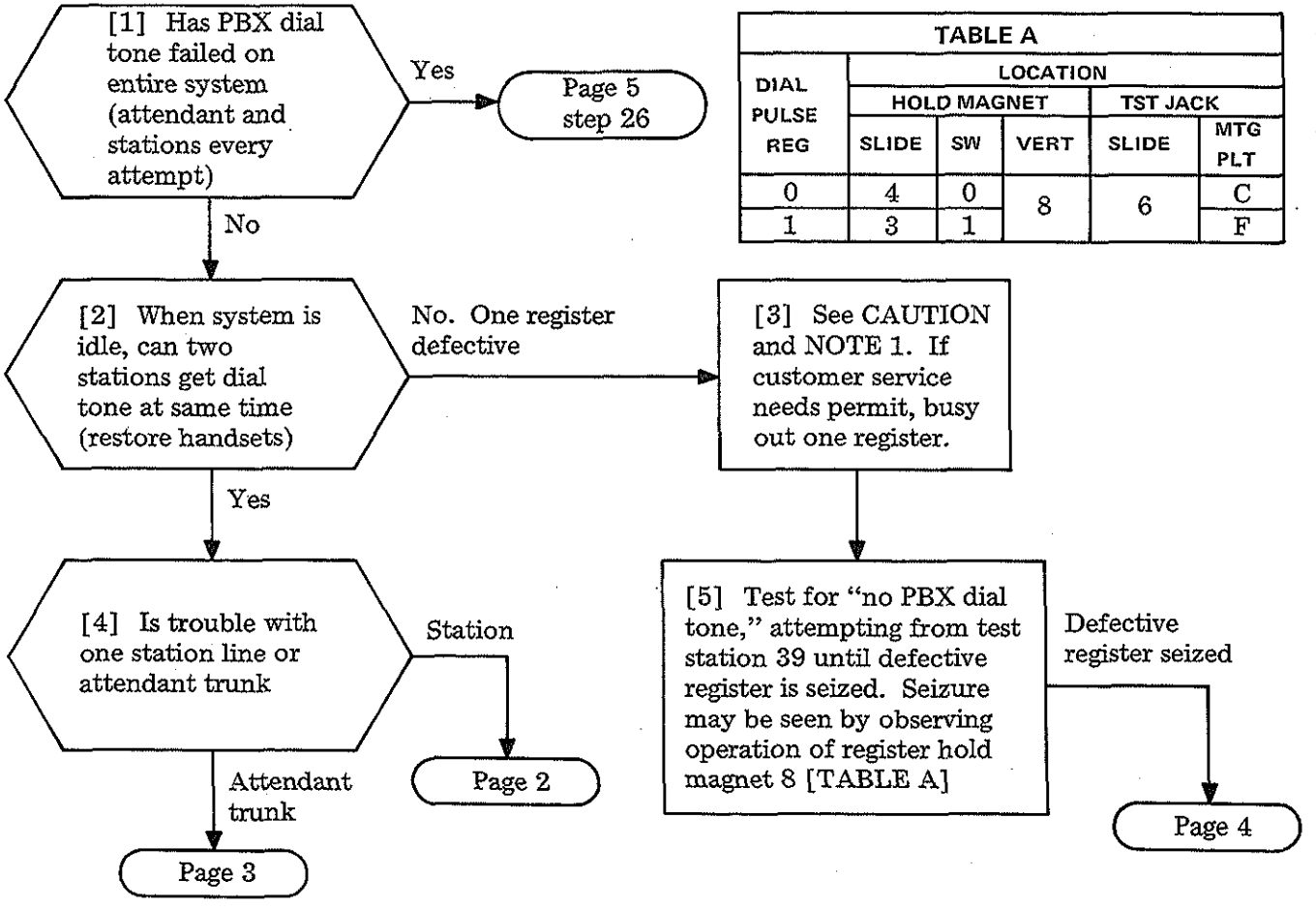

TABLE A

DIAL PULSE REG	LOCATION				
	HOLD MAGNET			TST JACK	
	SLIDE	SW	VERT	SLIDE	MTG PLT
0	4	0	8	6	C
1	3	1			F

CAUTION

Keep busy-out time brief. Registers 0 and 1 can provide dial tone to a maximum of two calling parties simultaneously. If no dialing (or DSS, etc.) follows, the register times out and diverts the call to intercept after 8 to 16 seconds.

NOTE 1

To busy out idle register 0 or 1, operate REG– key or make-busy and busy display (slide 3, mounting plate AB) or insert dummy 258 plug in TST jack of register. To disable register time-out, block nonoperated the TMO relay(s) via 768A tool(s) (plastic wedge) while testing

[6] At PBX cross-connecting terminal, operate dial hand test set switch to MON position and connect clips to T and R leads of station line associated with trouble

[7] At the PBX, does the L relay [TABLE B] operate and release when test set switch is operated to TALK

No → [8] Check operate path of L relay (FIG. 1]

Yes

[9] At crossbar switch vertical, does station line hold magnet (LHM) [TABLE B] lock operated

No → [10] Check operate, or lock path of LHM [FIG. 2]

Yes

[11] Verify that contacts of vertical connected station line to link [TAD-163]

TABLE B					
	LOCATION				
	L RELAY		LINE HOLD MAG		
STA NO	SLIDE	MTG PLT	SLIDE	SW	VERT
20-29	2	N, P	2	2	0-9*
30-39		L		3	
40-49	3		3	4	
50-59				5	
60-69	4		4	6	
70-79				7	

* Station 20 associated with vertical 0, station 29 associated with vertical 9, etc.

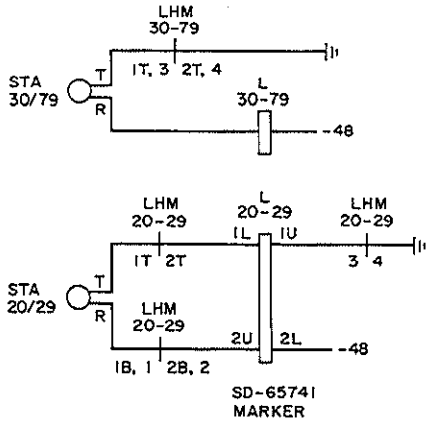

FIG. 1

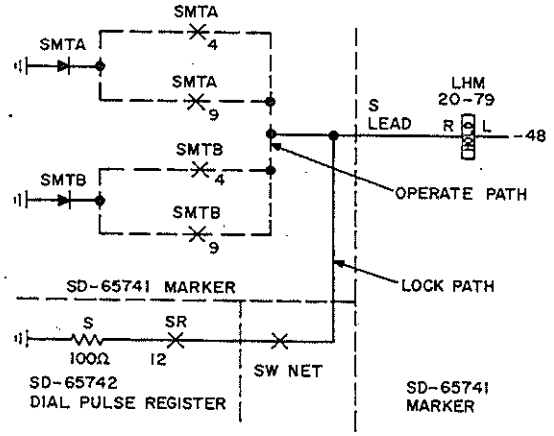

FIG. 2

CLEAR PBX DIAL TONE TROUBLE (SD-65742)

[12] At slide 5, is attendant connector (AC) relay operated in attendant trunk [TABLE C]

No → [13] Check operate path of AC relay [FIG. 3]

Yes ↓

[14] Do OUT and ON relays [TABLE C] operate

No → [15] Check operate path of OUT, ON relay(s) [FIG. 4]

Yes ↓

[16] Is attendant trunk hold magnet (THM) locked operated [TABLE C]

No → [17] Check operate path of trunk hold magnet [FIG. 5]

Yes ↓

[18] Verify that contacts of vertical connected attendant trunk to link [TAD-163]

TABLE C					
	LOCATION				
	HOLD MAGNET			RELAYS	
ATND TRK	SLIDE	SW	VERT	SL	MTG PLT
0	4	8	0	5	Y
1		0	5		Z
2			6		AA

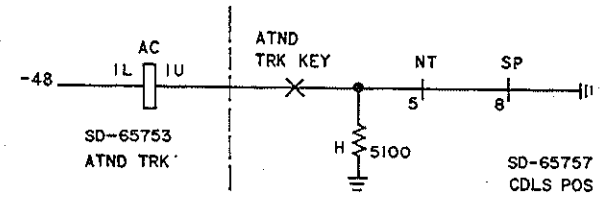

FIG. 3

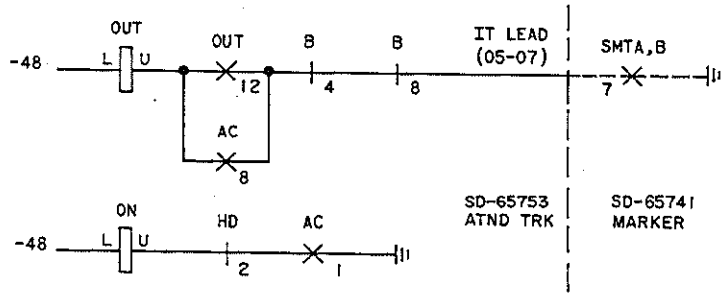

FIG. 4

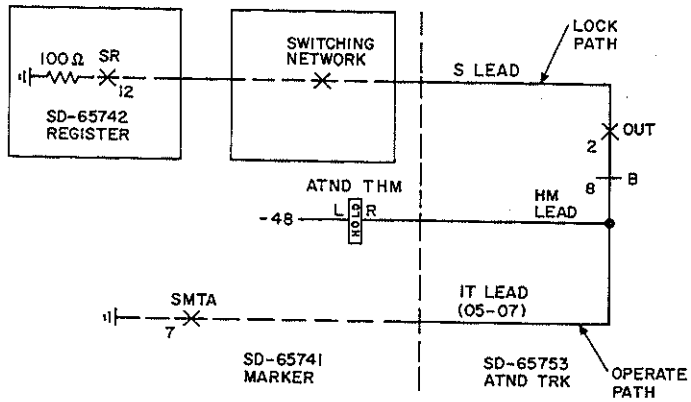

FIG. 5

CLEAR PBX DIAL TONE TROUBLE (SD-65742)

[19] Does trunk hold magnet associated with vertical 8 lock operated [TABLE D] to seize register

No → [20] Check operate, lock path(s) of THM per FIG. 6 and TABLE E and operate, lock path of LHM per FIG. 2 and TABLE B. (Register "cycles" if no lock path)

Yes ↓

[21] Observe operation of SR relay. If it operates, L relay operates. Locate relays via TABLE D

[22] Is plug-in type L relay operated (SR relay operated)

No → [23] Check operate path of L relay [FIG. 7]

Yes ↓

Page 5

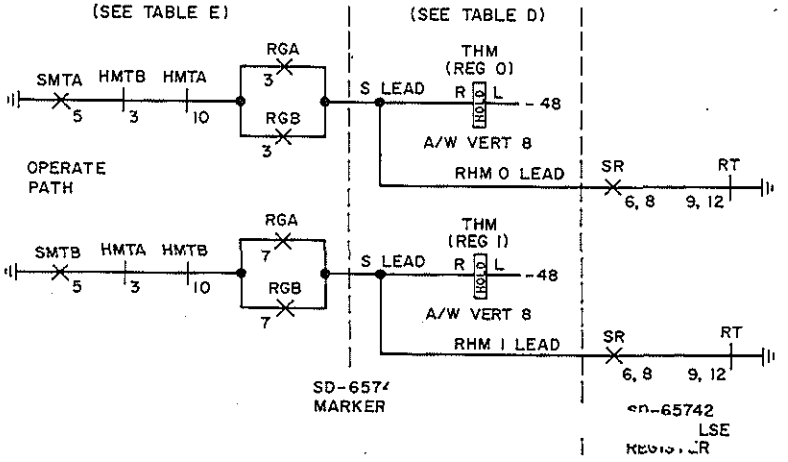

FIG. 6

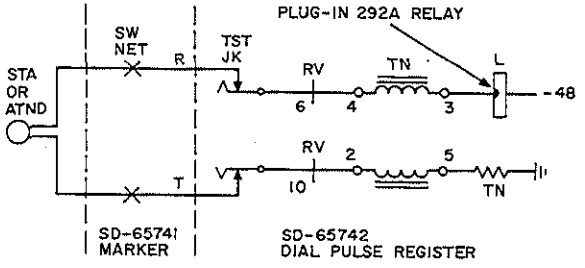

FIG. 7

TABLE D					
DIAL PULSE REG	DP REG EQ LOC				
	TRK HLD MAG			RELAY	
	SLIDE	SW	VERT	SLIDE	MTG PLT
0	4	0	8	6	A—C
1	3	1			D—F

TABLE E		
MARKER EQ LOC		
RELAY	SLIDE	MTG PLT
RGA RGB	6	G
SMTA SMTB		T
HMTA HMTB		Q

CLEAR PBX DIAL TONE TROUBLE (SD-65742)

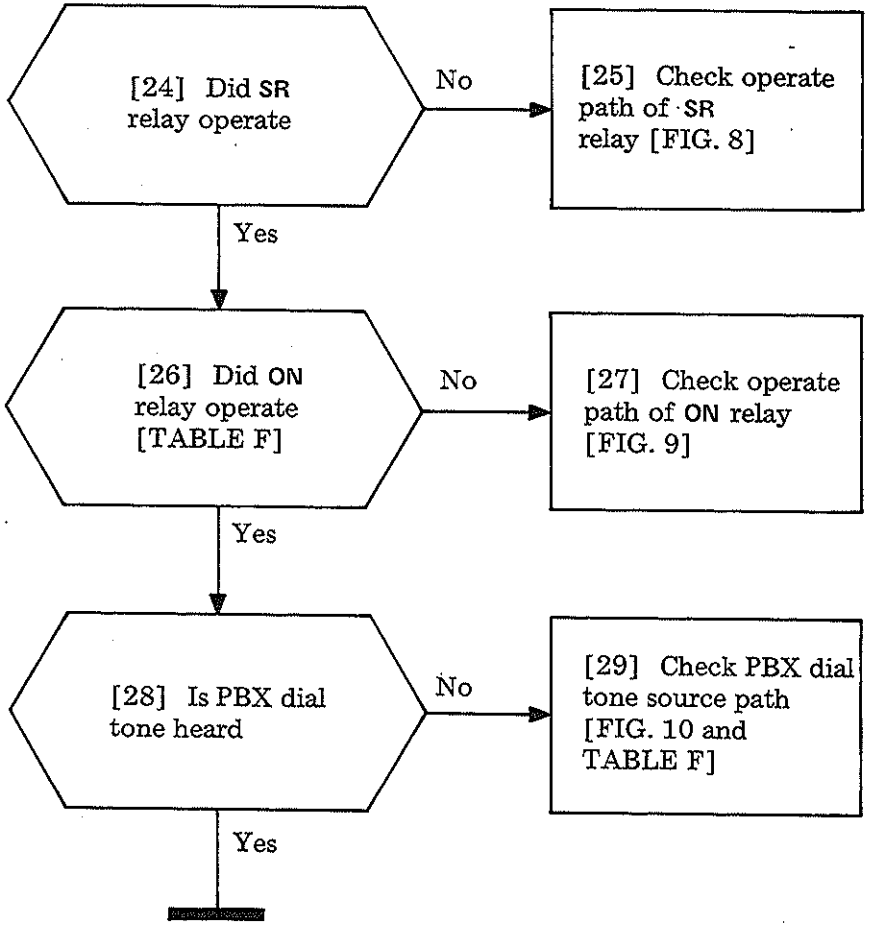

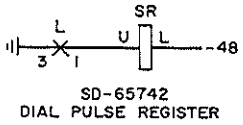

FIG. 8

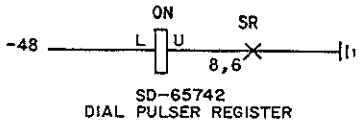

FIG. 9

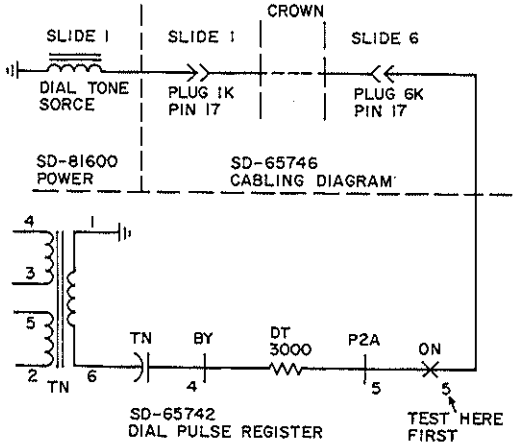

FIG. 10

TABLE F		
DIAL PULSE REG	RELAY LOCATION	
	SLIDE	MTG PLT
0	6	A—C
1		D—F

CLEAR PBX DIAL TONE TROUBLE (SD-65742)

SUMMARY

This procedure shows the method of locating trouble if a power failure transfer station(s) cannot call out on CO trunk(s) after commercial power has failed. If red trouble (TR) lamp is steadily lighted at attendant console, it may indicate commercial power has been restored after trouble was reported. At the PBX terminal, make test(s) to see if CO trunk(s) transferred to station(s). Try to call out on CO trunk from power failure transfer station(s) reporting trouble. Reestablish any released flexible night service if power is restored when trouble is cleared.

[1] See TABLE A for relay location(s). Are all automatic transfer relays *released* [AT, ATA; also AT1, ATA1 if provided]

No → [2] See CAUTION and FIG. 1. At slide 1, mounting plate position Z, temporarily remove FA fuse. Check that all make contacts shown in FIG. 1 open.

Yes

[3] At PBX terminal, use dial hand test set (switch in TALK position) to check for CO dial tone at station terminals of each station arranged for power failure transfer. [NOTE 1]

NOTE 1
While testing for dial tone at the PBX terminal, it is necessary to momentarily ground one side of the station line being tested

CO trunk-to-station transfer path tested

Page 2

CAUTION
Notify customer all power failure transfer stations will transfer to CO trunks during test.

TABLE A		
RELAY	LOCATION	
	SLIDE	MTG PLT
AT	2	L
ATA	5	J
*AT1	1	X
*ATA1	1	X
NS	5	J

* When provided (for CO trunks 5-7)

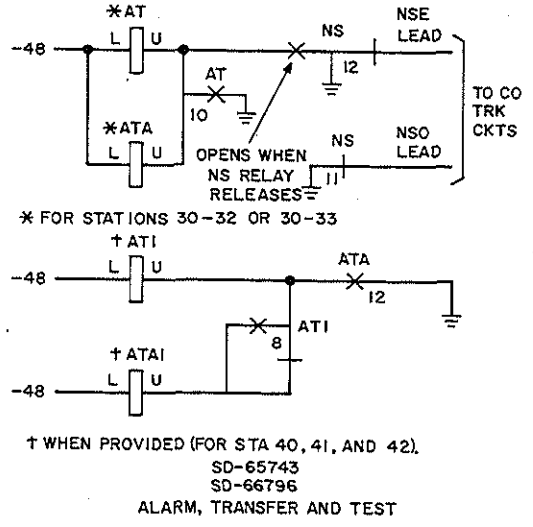

FIG. 1

CLEAR POWER FAILURE TRANSFER TROUBLE (SD-66796)

[4] Do all CO trunks arranged for power failure transfer connect to stations [NOTE 2]

No → [5] Check for dirty or misaligned contacts [FIG. 2 and TABLE B]

Yes

[6] Can each power failure transfer station get CO dial tone by operating associated nonlocking key [NOTE 3]

No → [7] With station off-hook, verify that operated key applies ground to tip (T) of line [FIG. 2, and TABLE B]

Yes

[8] Restore all equipment to normal. If removed (Step 2), replace FA fuse. Reestablish flexible night connections, if required.

NOTES

2. Break contacts of automatic transfer relays connect CO trunks to stations (3, 4, or 6 may be hardwired depending on vintage of system)
3. A power failure transfer station must momentarily operate a nonlocking key (551A, typical) to start CO dial tone

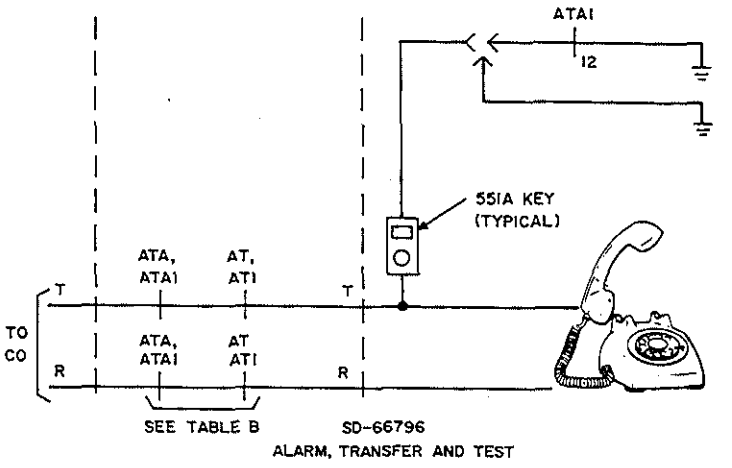

FIG. 2

TABLE B									
POWER FAILURE TRANSFER – VIA REL, LD, & CONT									
FROM CO TRK	TO STA	AT		ATA		AT1†		ATA1†	
		T	R	T	R	T	R	T	R
0	30	1B	2B	1B	1B				
1	31	4B	5B	3B	4B				
2	32	7B	8B	5B	6B				
5*	33*	10B*	11B*	7B*	8B*				
5†	40†					5B	6B	5B	6B
6†	41†					3B	4B	3B	4B
7†	42†					1B	2B	1B	2B

* Early versions only

† When AT1, ATA1 relays provided to transfer CO trunks 5-7

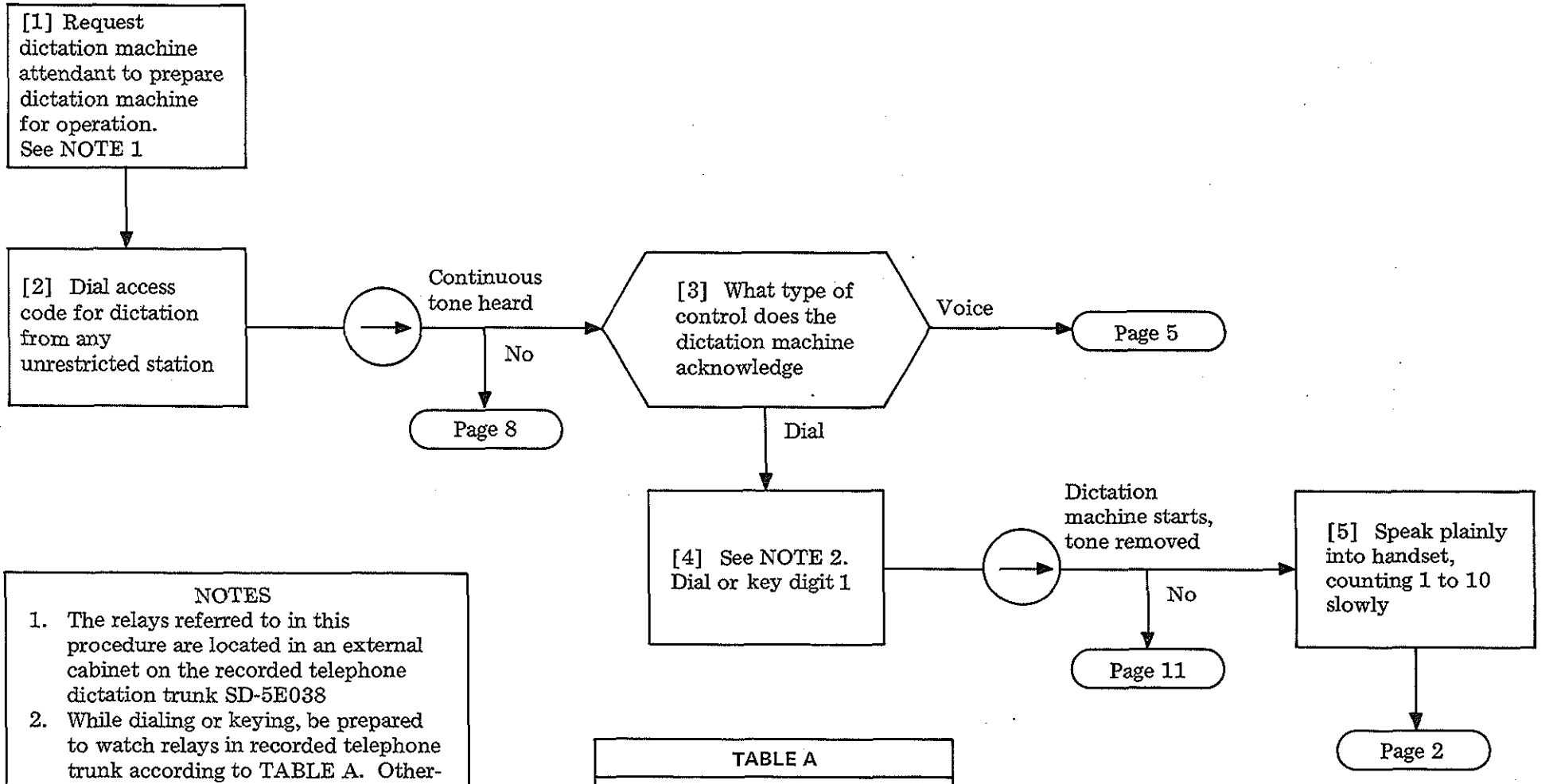

NOTES

1. The relays referred to in this procedure are located in an external cabinet on the recorded telephone dictation trunk SD-5E038
2. While dialing or keying, be prepared to watch relays in recorded telephone trunk according to TABLE A. Otherwise, if results are not obtained, sequence will require repeating while observing relays

TABLE A	
RELAYS	
TOUCH-TONE	ROTARY DIAL
C1, C2, C0 0-4, P1, and TM	C1, C2, and P1

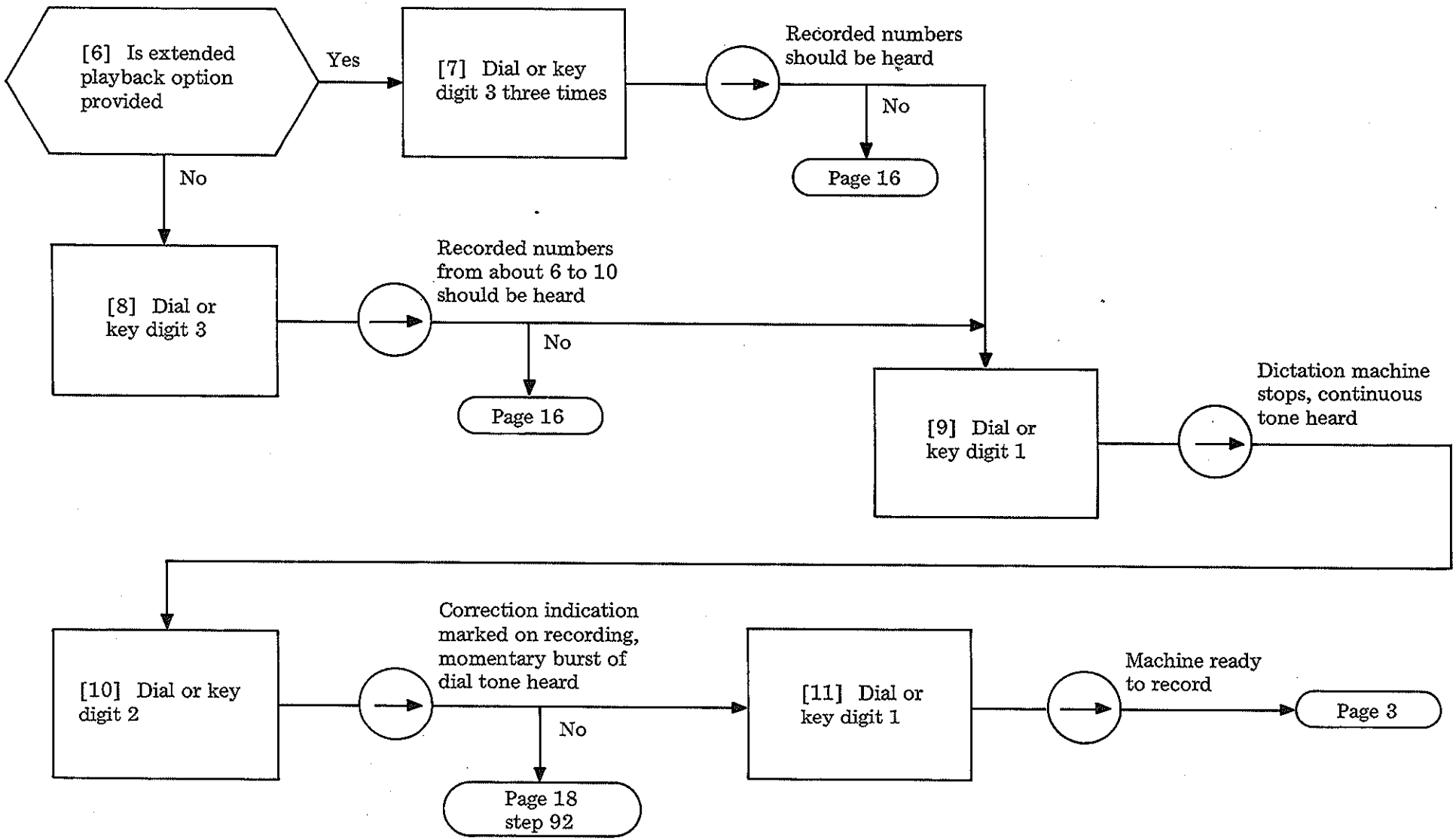

CLEAR RECORDED TELEPHONE DICTATION TRUNK TROUBLE (SD-5E038)

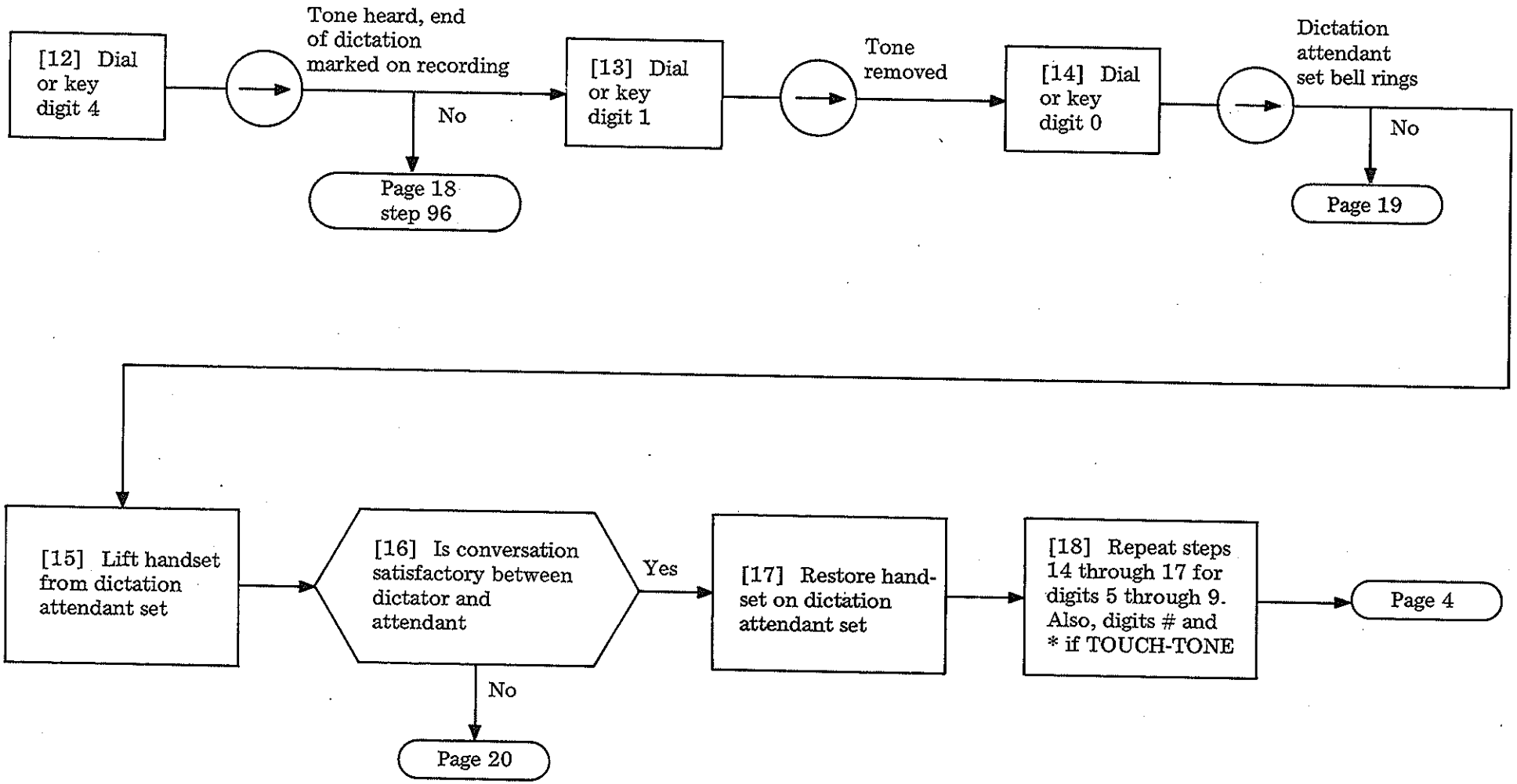

CLEAR RECORDED TELEPHONE DICTATION TRUNK TROUBLE (SD-5E038)

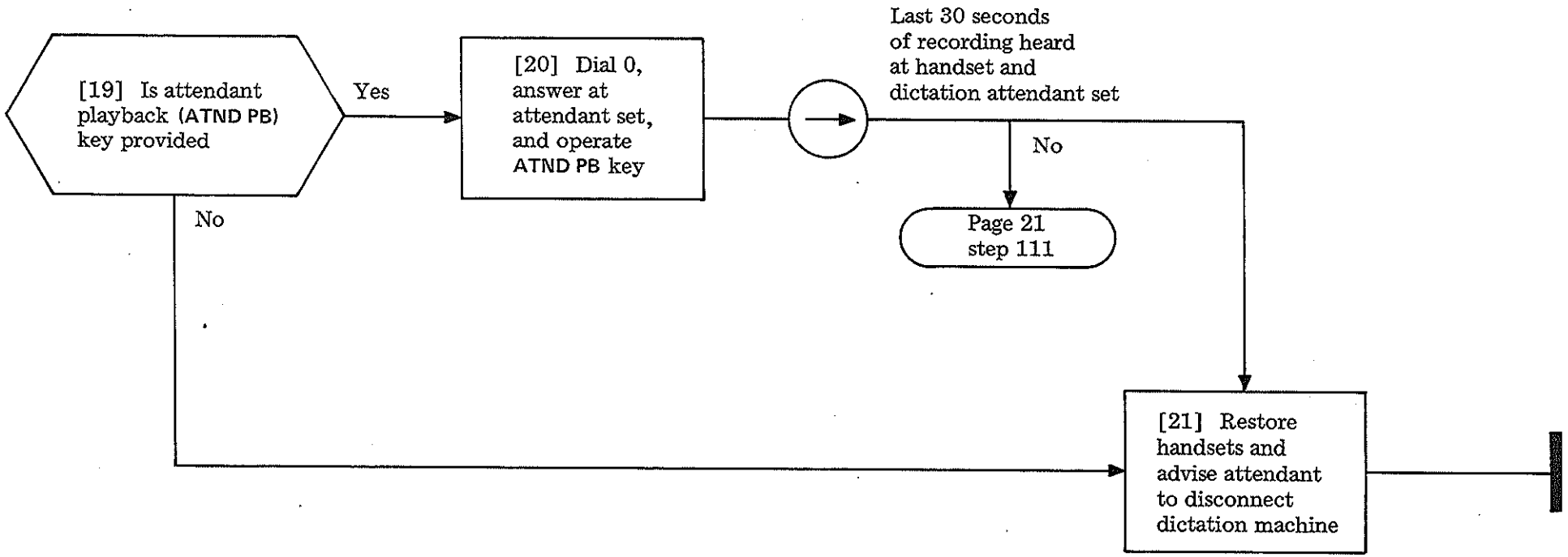

CLEAR RECORDED TELEPHONE DICTATION TRUNK TROUBLE (SD-5E038)

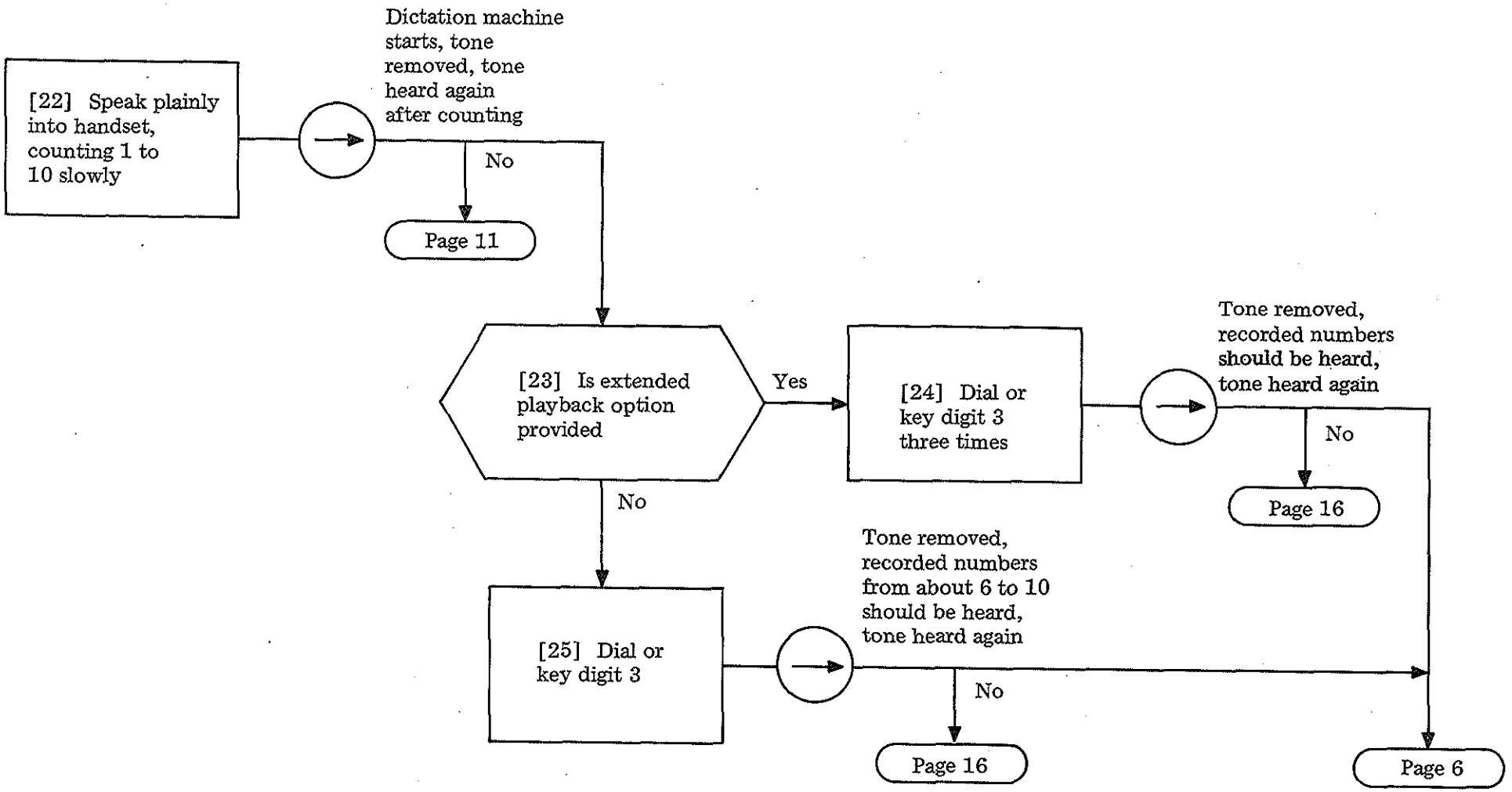

CLEAR RECORDED TELEPHONE DICTATION TRUNK TROUBLE (SD-5E038)

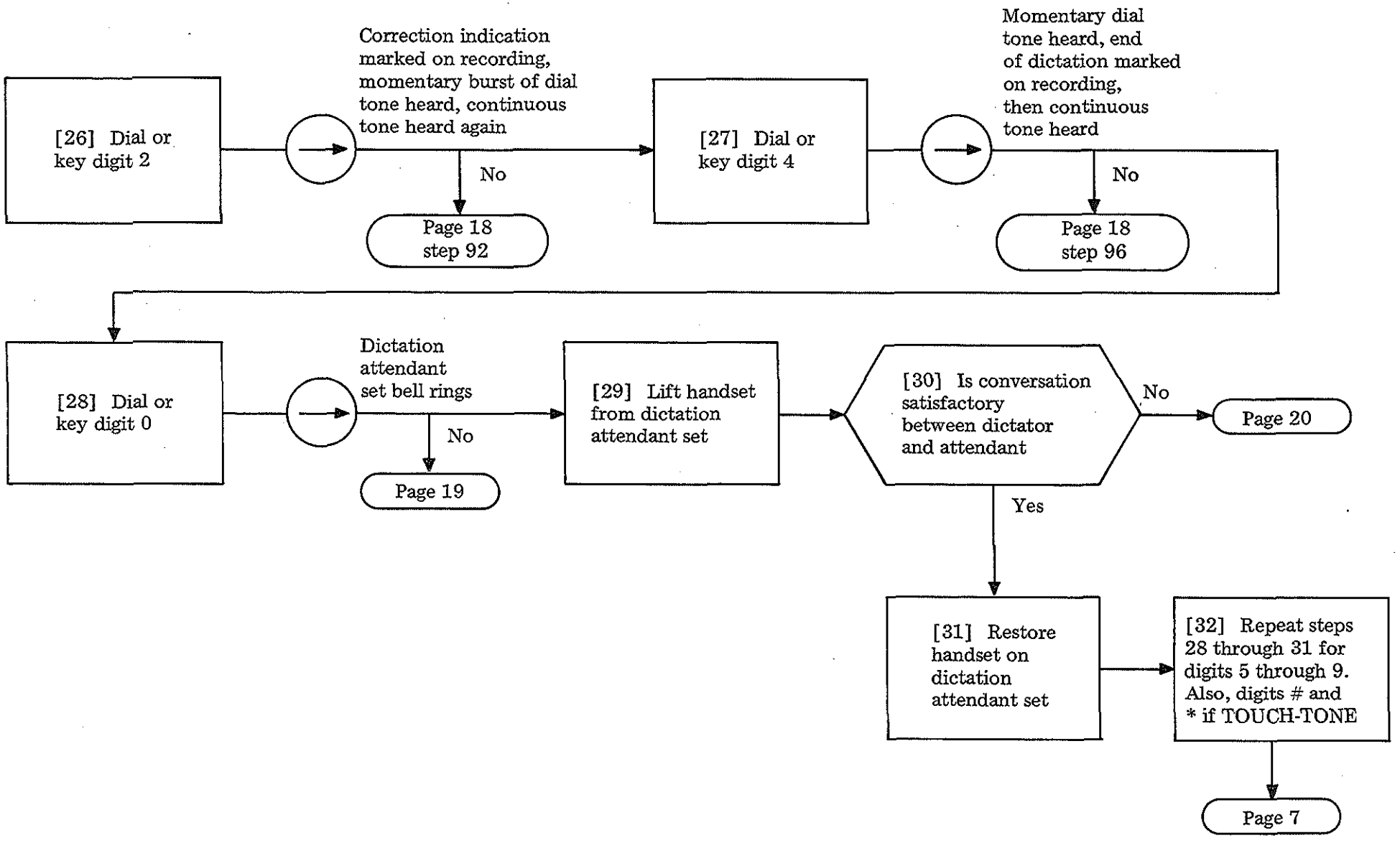
[26] Dial or key digit 2
Correction indication marked on recording, momentary burst of dial tone heard, continuous tone heard again
No
Page 18 step 92
[27] Dial or key digit 4
Momentary dial tone heard, end of dictation marked on recording, then continuous tone heard
No
Page 18 step 96
[28] Dial or key digit 0
Dictation attendant set bell rings
No
Page 19
[29] Lift handset from dictation attendant set
[30] Is conversation satisfactory between dictator and attendant
No
Page 20
Yes
[31] Restore handset on dictation attendant set
[32] Repeat steps 28 through 31 for digits 5 through 9. Also, digits # and * if TOUCH-TONE
Page 7

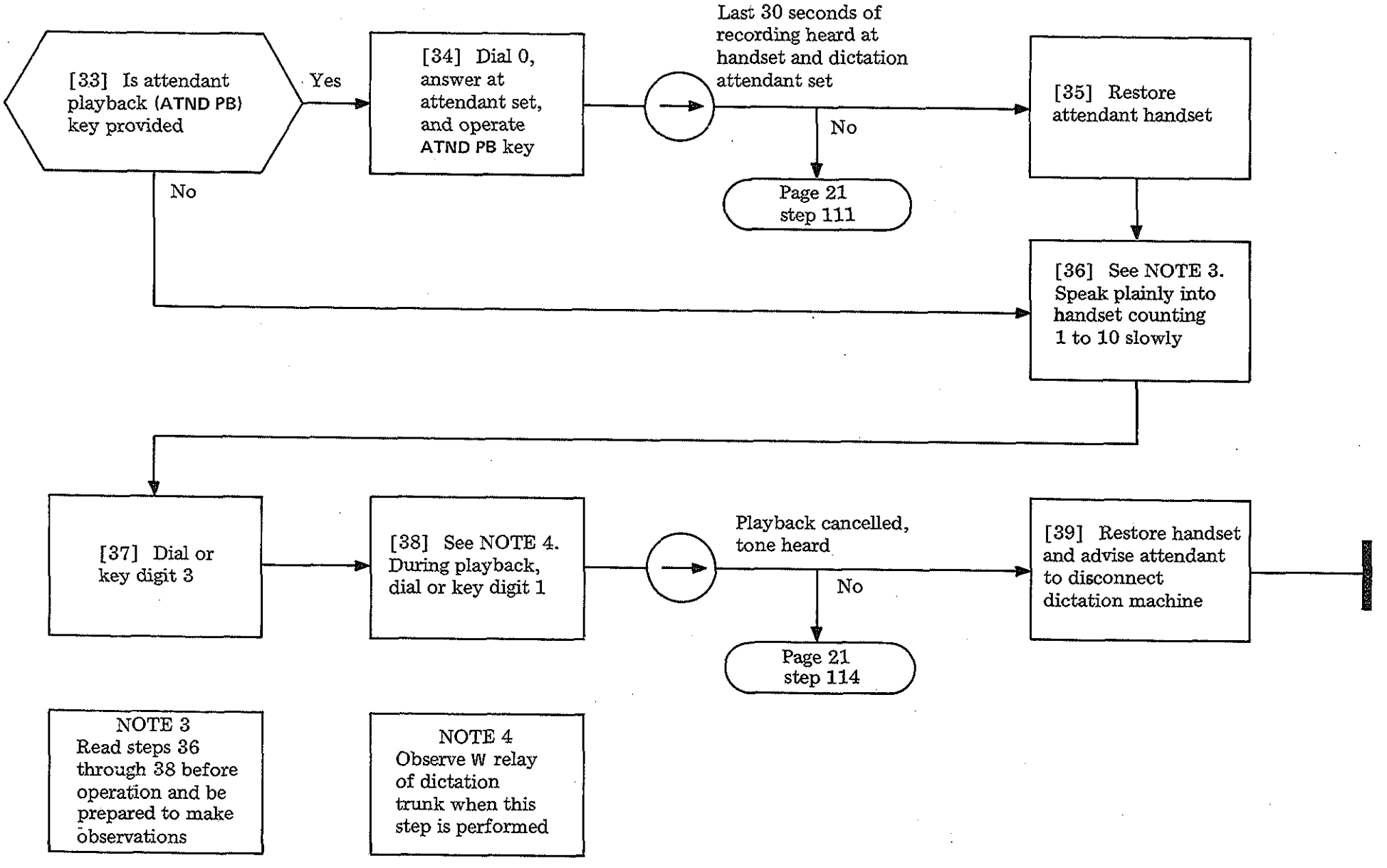
[33] Is attendant playback (ATND PB) key provided
Yes
No
[34] Dial 0, answer at attendant set, and operate ATND PB key
Last 30 seconds of recording heard at handset and dictation attendant set
No
Page 21 step 111
[35] Restore attendant handset
[36] See NOTE 3. Speak plainly into handset counting 1 to 10 slowly
[37] Dial or key digit 3
[38] See NOTE 4. During playback, dial or key digit 1
Playback cancelled, tone heard
No
Page 21 step 114
[39] Restore handset and advise attendant to disconnect dictation machine
NOTE 3
Read steps 36 through 38 before operation and be prepared to make observations
NOTE 4
Observe W relay of dictation trunk when this step is performed

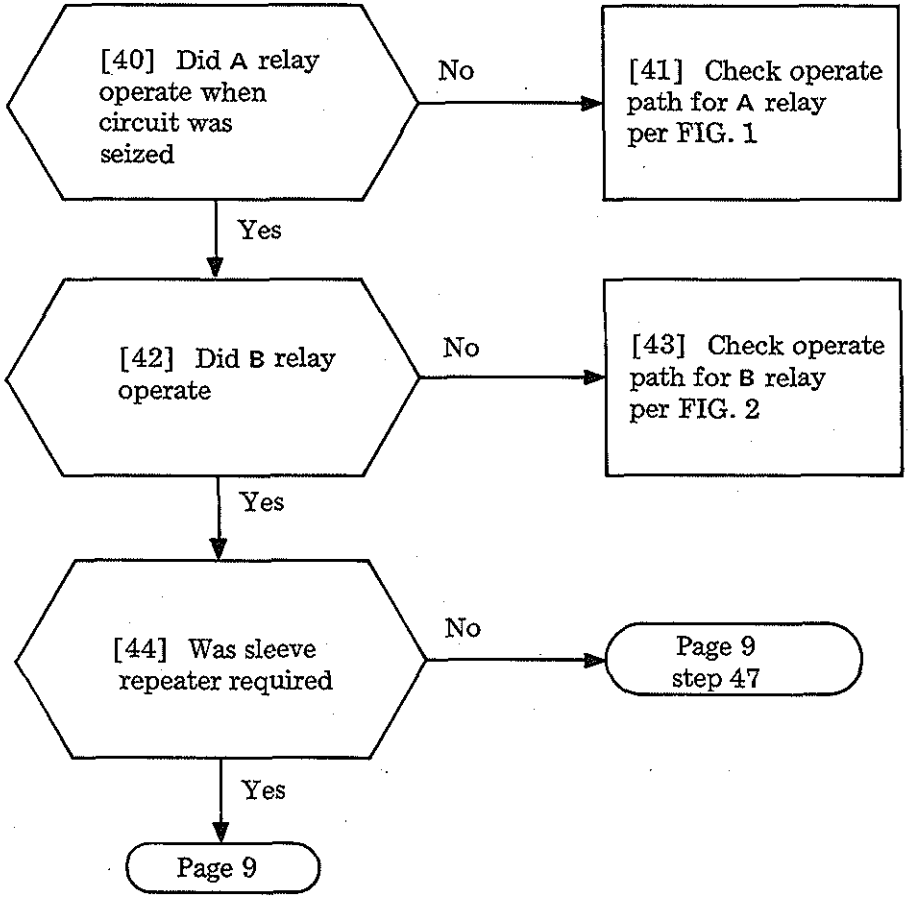
[40] Did A relay operate when circuit was seized
No
[41] Check operate path for A relay per FIG. 1
Yes
[42] Did B relay operate
No
[43] Check operate path for B relay per FIG. 2
Yes
[44] Was sleeve repeater required
No
Page 9 step 47
Yes
Page 9

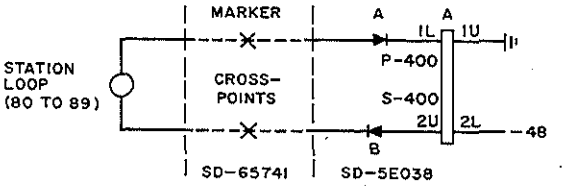
MARKER
A
A
1L
1U
P-400
STATION LOOP (80 TO 89)
CROSS-POINTS
S-400
2U
2L
48
B
SD-65741
SD-5E038

FIG. 1

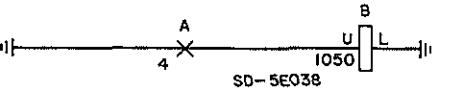
B
A
U
L
4
1050
SD-5E038

FIG. 2

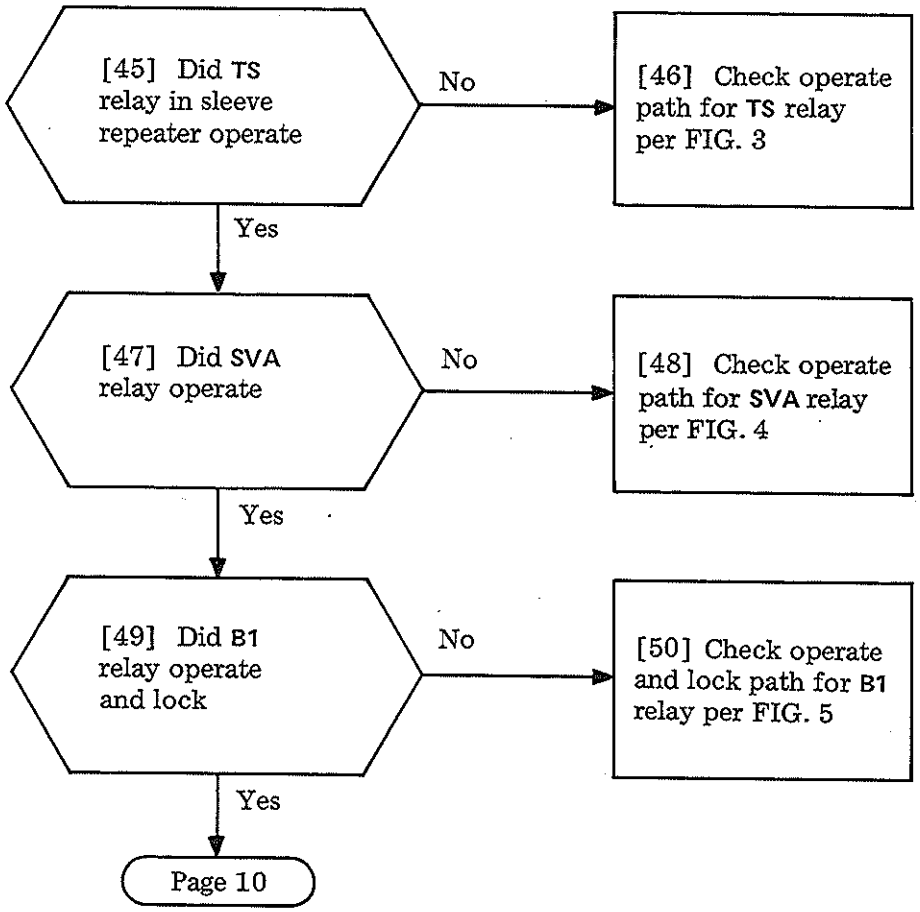

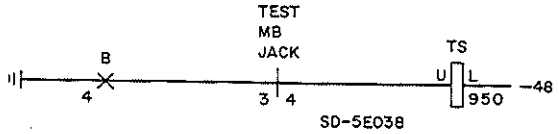

FIG. 3

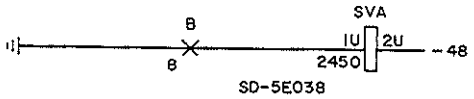

FIG. 4

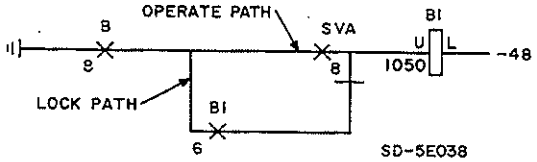

FIG. 5

[51] Is TOUCH-TONE provided

Yes → [52] Did ST relay operate

No → [53] Check operate path for ST relay per FIG. 6

Yes → [54] Is control voice or dial/key

Voice → [55] Check path for tone to ring side of line per FIG. 7

Dial/key → [56] Did TN relay operate

No → [57] Check operate path for TN relay per FIG. 8

Yes → [58] Check path for tone to ring side of line per FIG. 7

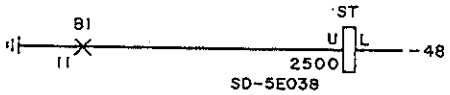

FIG. 6

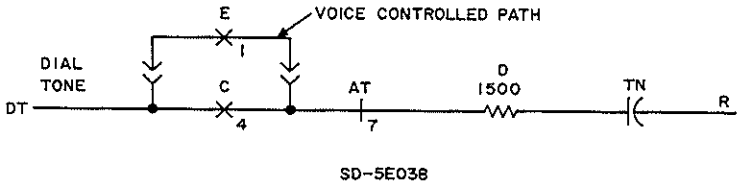

FIG. 7

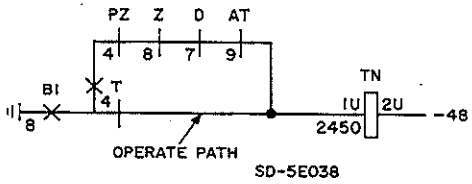

FIG. 8

CLEAR RECORDED TELEPHONE DICTATION TRUNK TROUBLE (SD-5E038)

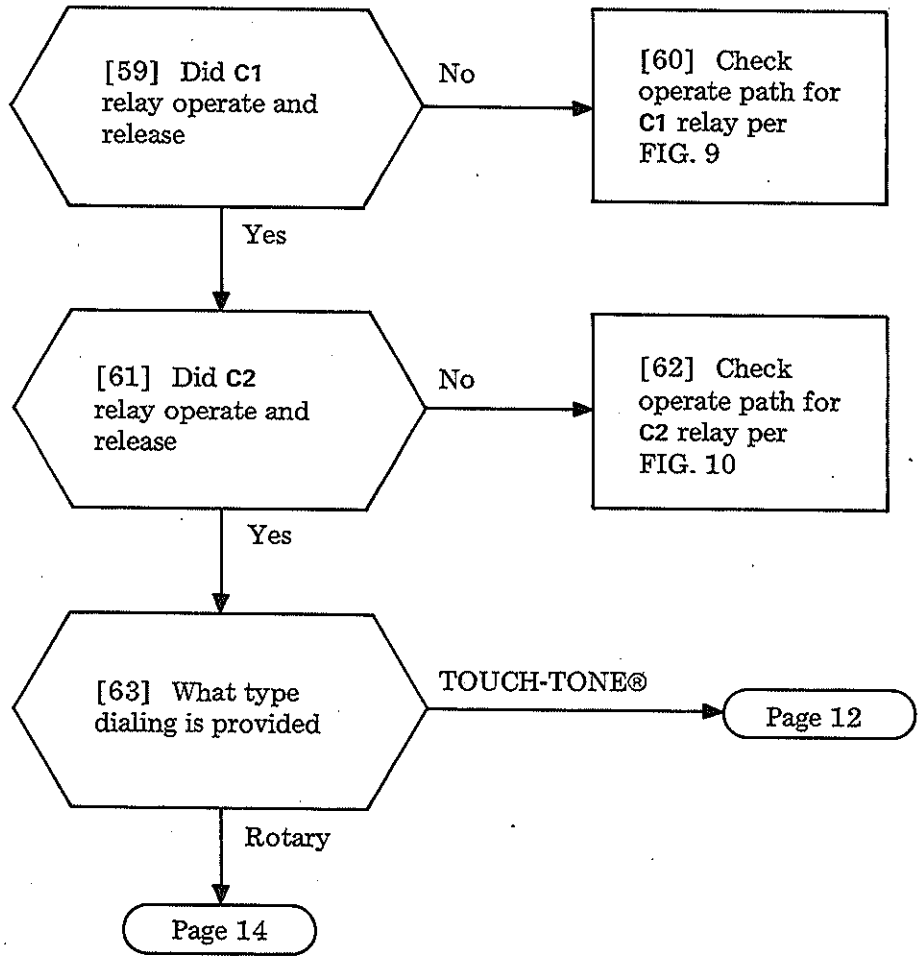

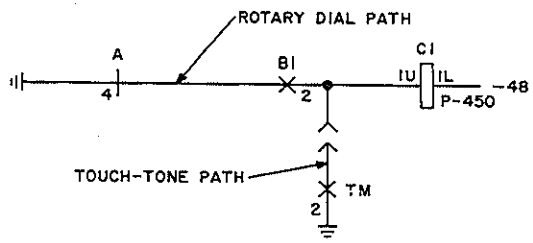

FIG. 9

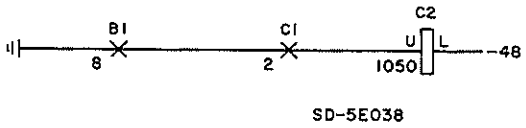

FIG. 10

CLEAR RECORDED TELEPHONE DICTATION TRUNK TROUBLE (SD-5E038)

[64] See WARNING. Did CO relay operate and release after party dialed start code

No → [65] Check operate path for CO relay per FIG. 11

Yes ↓

[66] Did 0, 1, 2, 3 or 4 relay operate and release when party dialed digit

No → [67] Check operate path for 0, 1, 2, 3 or 4 relays depending on digit dialed per FIG. 13

Yes ↓

[68] Did TM relay operate and release

No → [69] Check operate path for TM relay per FIG. 12

Yes ↓

Page 14

WARNING
Relays L *and* H *operate* STR *relay. These are dry reed relays and precaution should be taken not to damage them.*

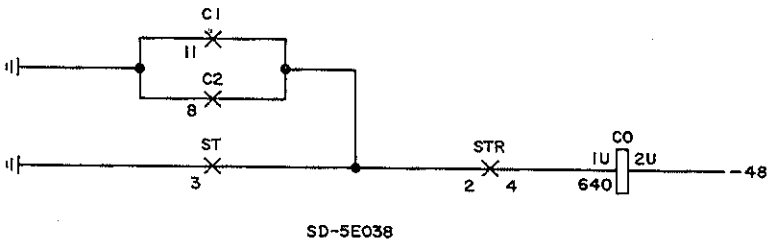

FIG. 11

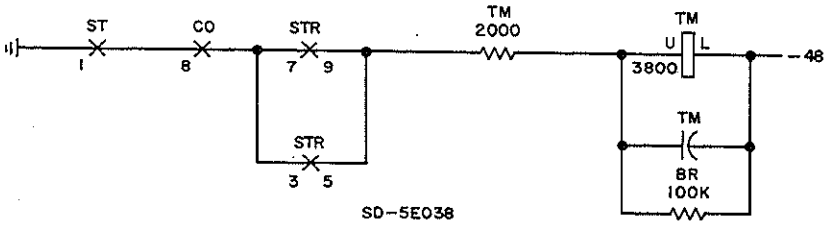

FIG. 12

CLEAR RECORDED TELEPHONE DICTATION TRUNK TROUBLE (SD-5E038)

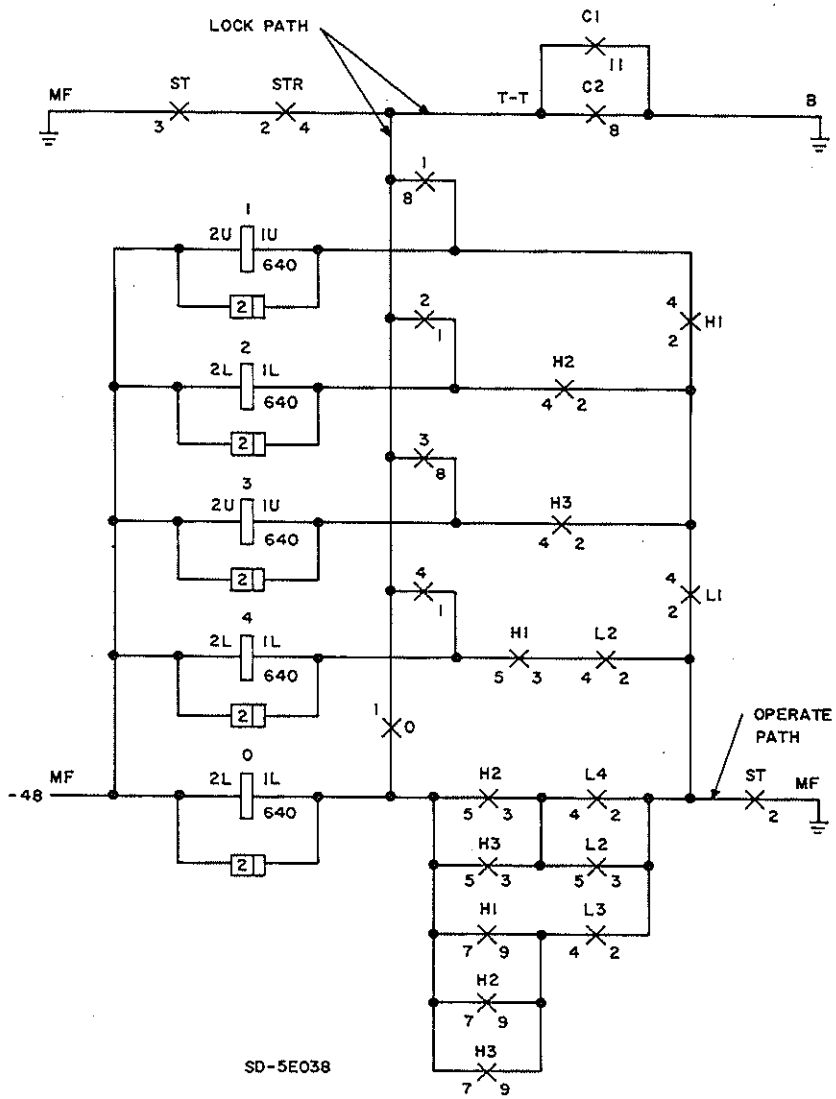

FIG. 13

CLEAR RECORDED TELEPHONE DICTATION TRUNK TROUBLE (SD-5E038)

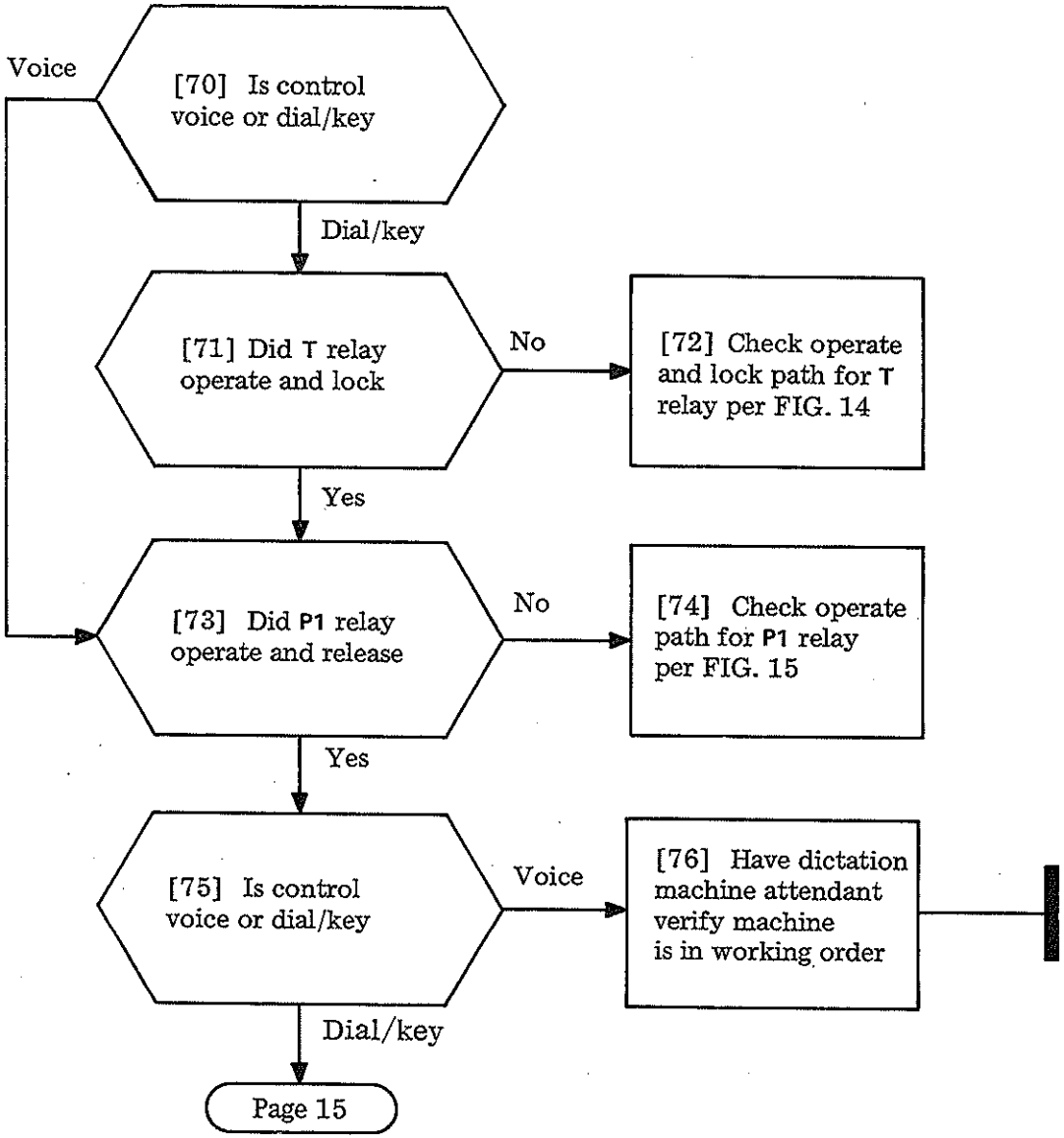

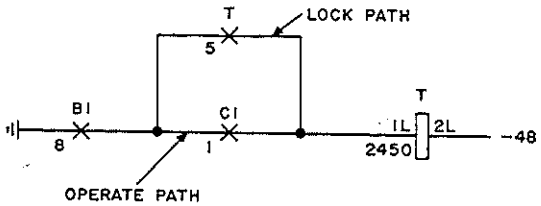

FIG. 14

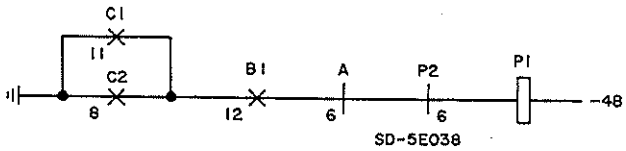

FIG. 15

CLEAR RECORDED TELEPHONE DICTATION TRUNK TROUBLE (SD-5E038)

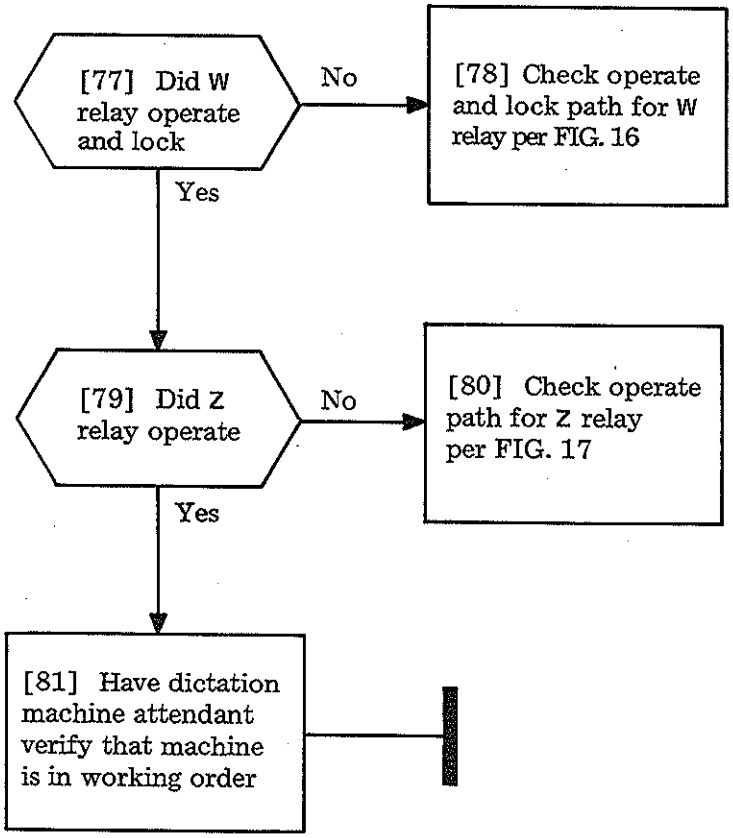
[77] Did W relay operate and lock
No
[78] Check operate and lock path for W relay per FIG. 16
Yes
[79] Did Z relay operate
No
[80] Check operate path for Z relay per FIG. 17
Yes
[81] Have dictation machine attendant verify that machine is in working order

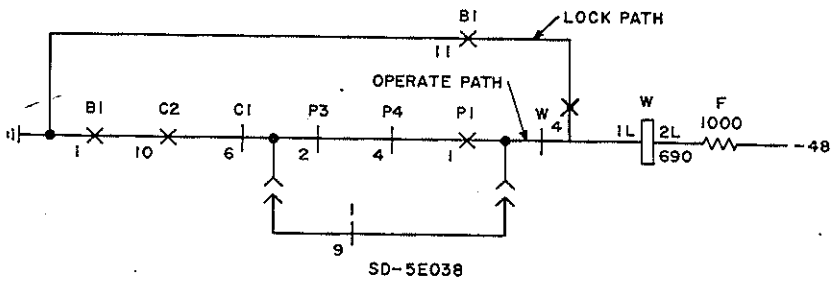
B1
LOCK PATH
OPERATE PATH
B1
C2
C1
P3
P4
P1
W
W
F
1L
2L
1000
690
-48
SD-5E038

FIG. 16

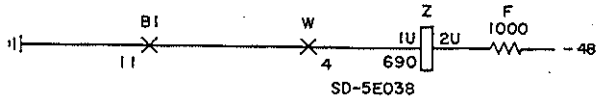
B1
W
Z
F
1U
2U
1000
690
-48
SD-5E038

FIG. 17

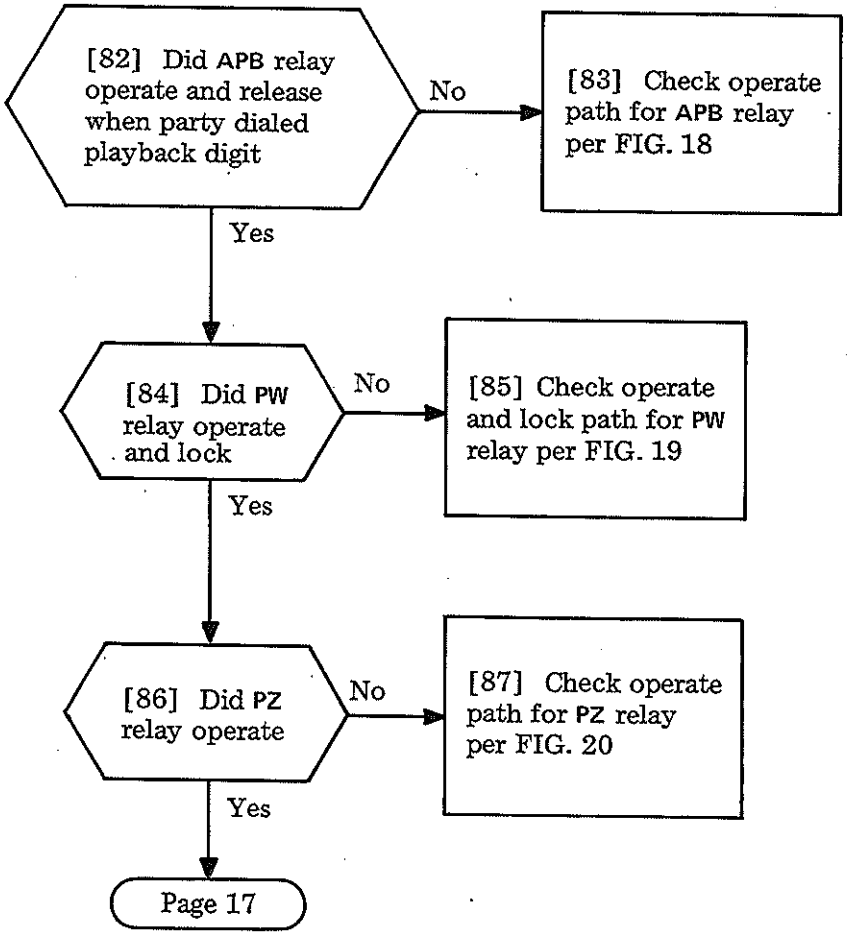

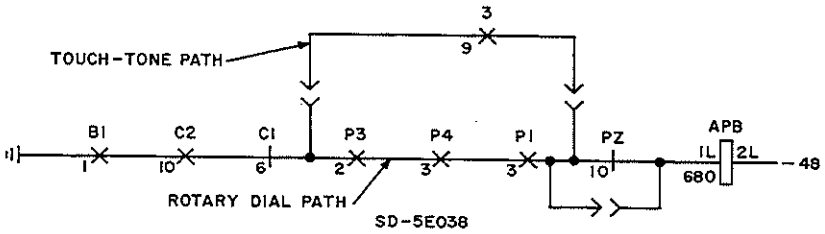

FIG. 18

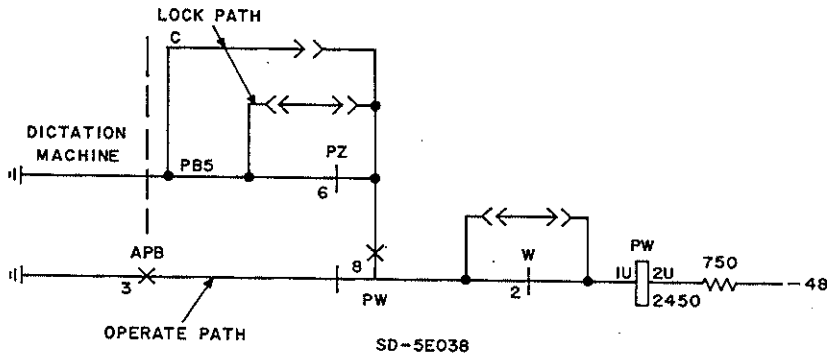

FIG. 19

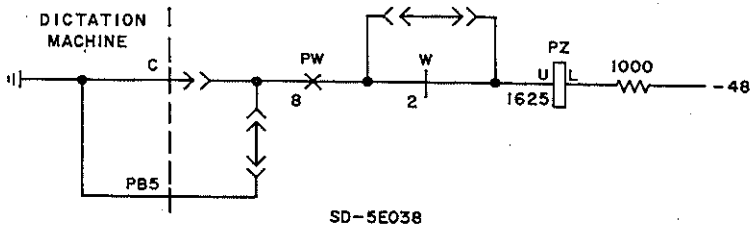

FIG. 20

CLEAR RECORDED TELEPHONE DICTATION TRUNK TROUBLE (SD-5E038)

[88] Check talk path between dictator and dictation machine per FIG. 21

[89] Hang up handset and repeat steps 2 through 8

[90] Are recorded numbers heard

Yes

No

[91] Have dictation machine attendant verify machine is working properly

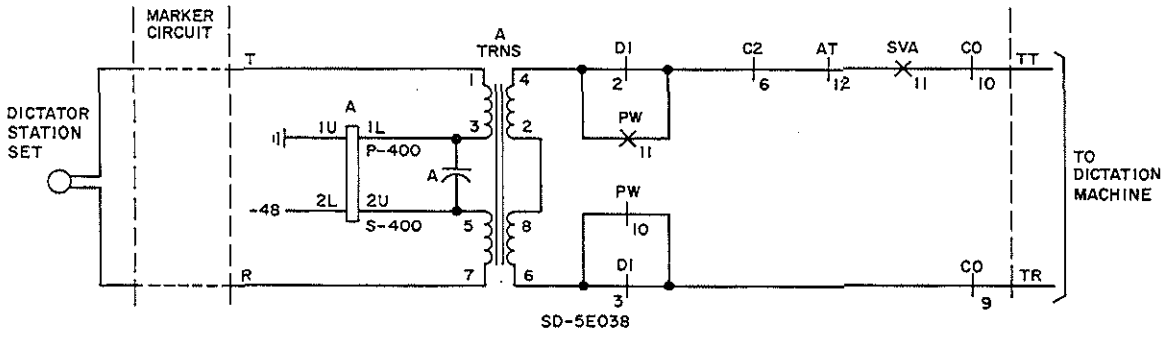

FIG. 21

CLEAR RECORDED TELEPHONE DICTATION TRUNK TROUBLE (SD-5E038)

[92] Did C relay operate and release when party dialed correction digit 2

No → [93] Check operate path for C relay per FIG. 22

Yes ↓

[94] Did party get acknowledgement tone

No → [95] Check tone path to ring side of line per FIG. 23

Yes ↓

[96] Did E relay operate and release when party dialed end of dictation digit 4

No → [97] Check operate path for E relay per FIG. 24

Yes ↓

[98] Did party get acknowledgement tone

No → [99] Check tone path to ring side of line per FIG. 23

Yes ↓

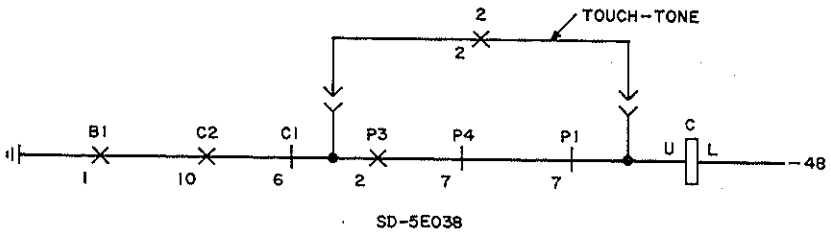

FIG. 22

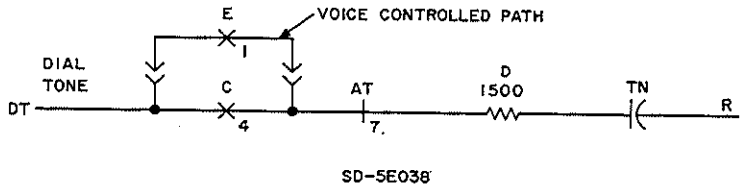

FIG. 23

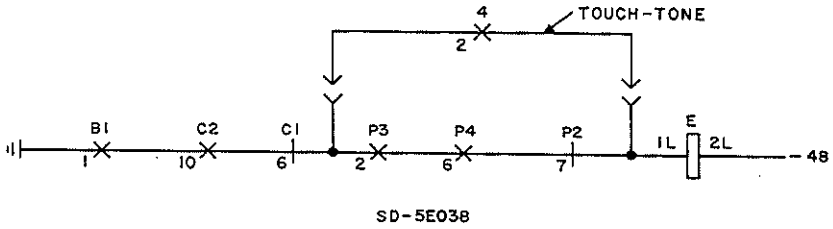

FIG. 24

CLEAR RECORDED TELEPHONE DICTATION TRUNK TROUBLE (SD-5E038)

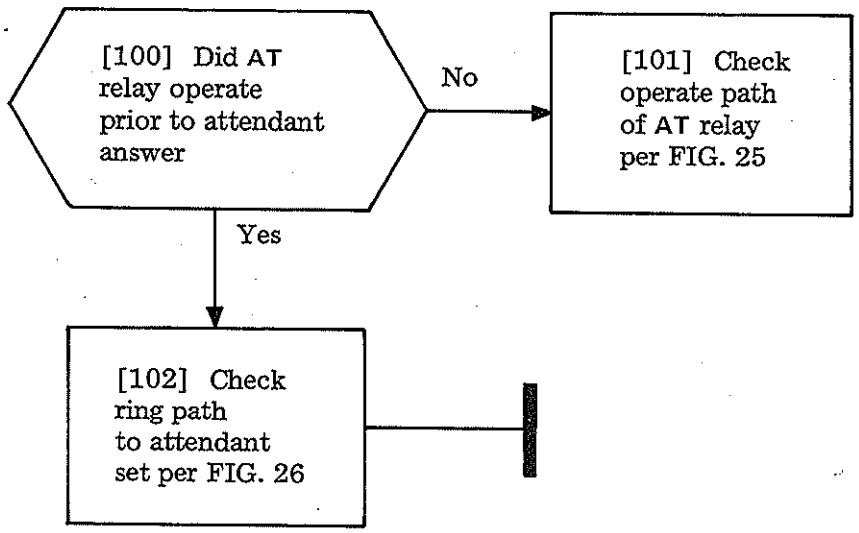

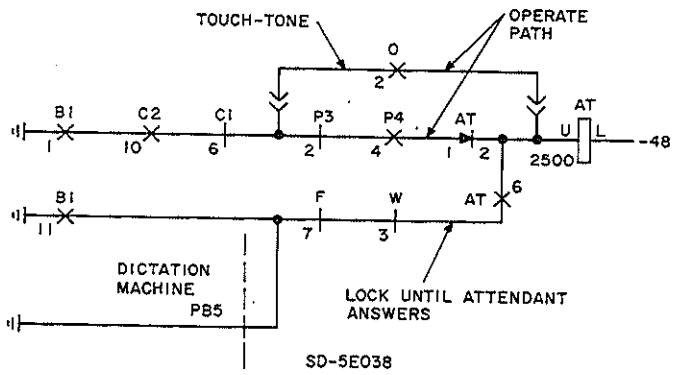

FIG. 25

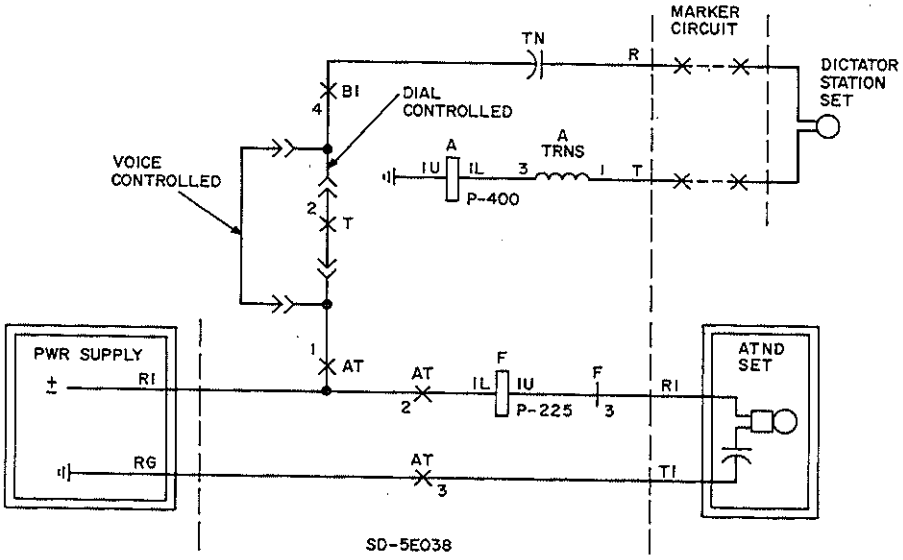

FIG. 26

CLEAR RECORDED TELEPHONE DICTATION TRUNK TROUBLE (SD-5E038)

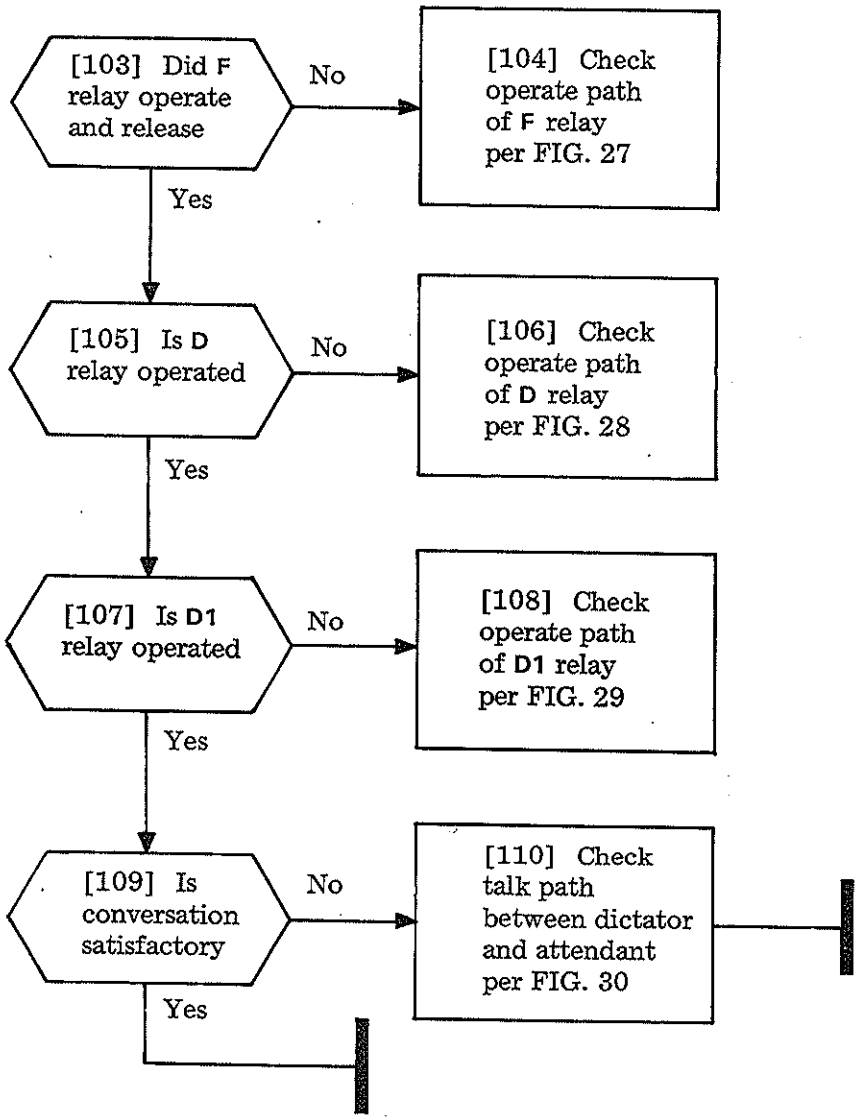

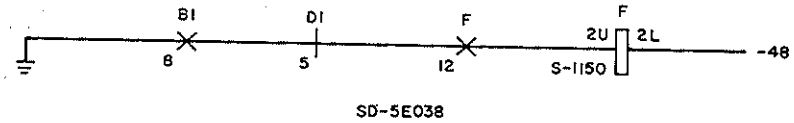

FIG. 27

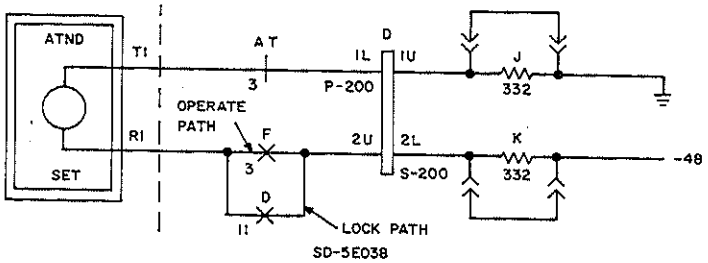

FIG. 28

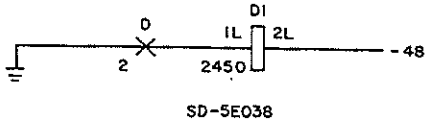

FIG. 29

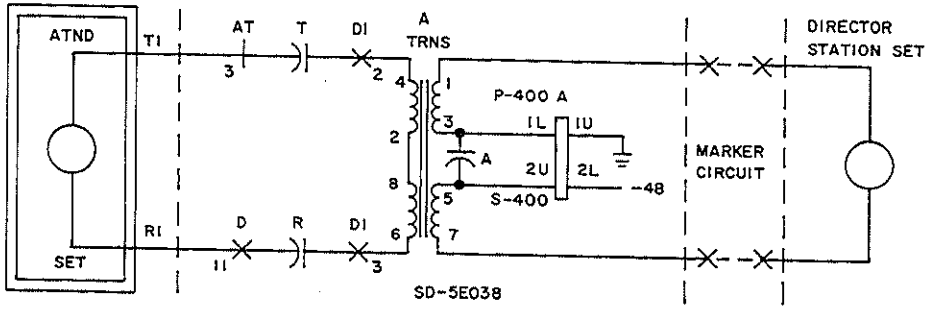

FIG. 30

CLEAR RECORDED TELEPHONE DICTATION TRUNK TROUBLE (SD-5E038)

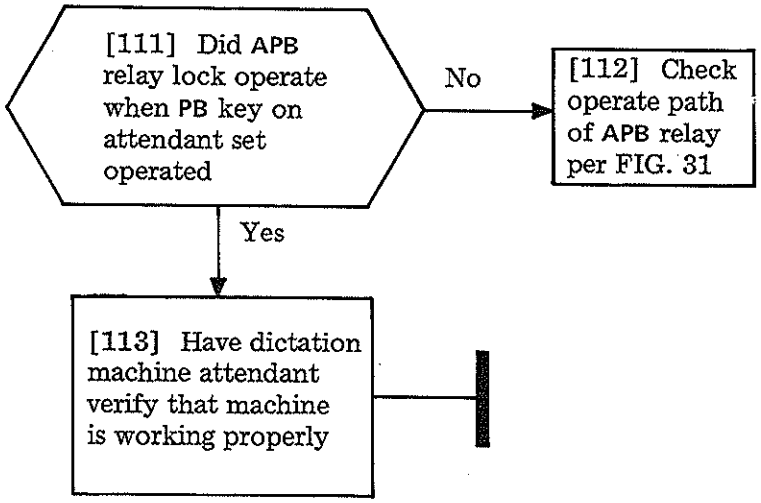

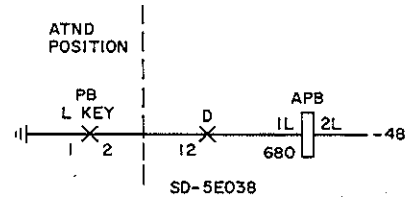

FIG. 31

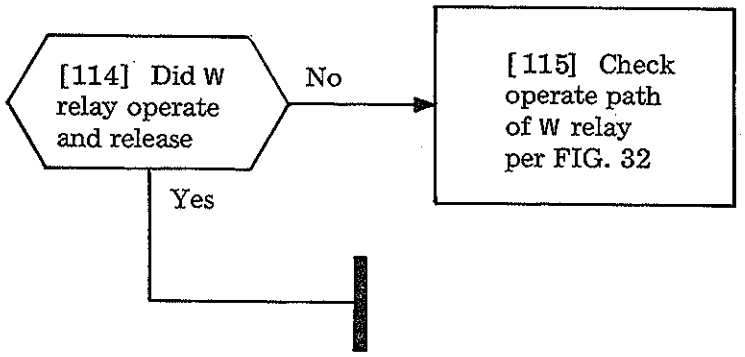

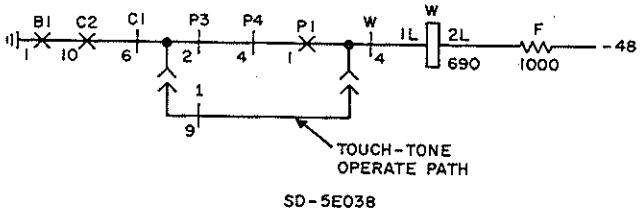

FIG. 32

CLEAR RECORDED TELEPHONE DICTATION TRUNK TROUBLE (SD-5E038)

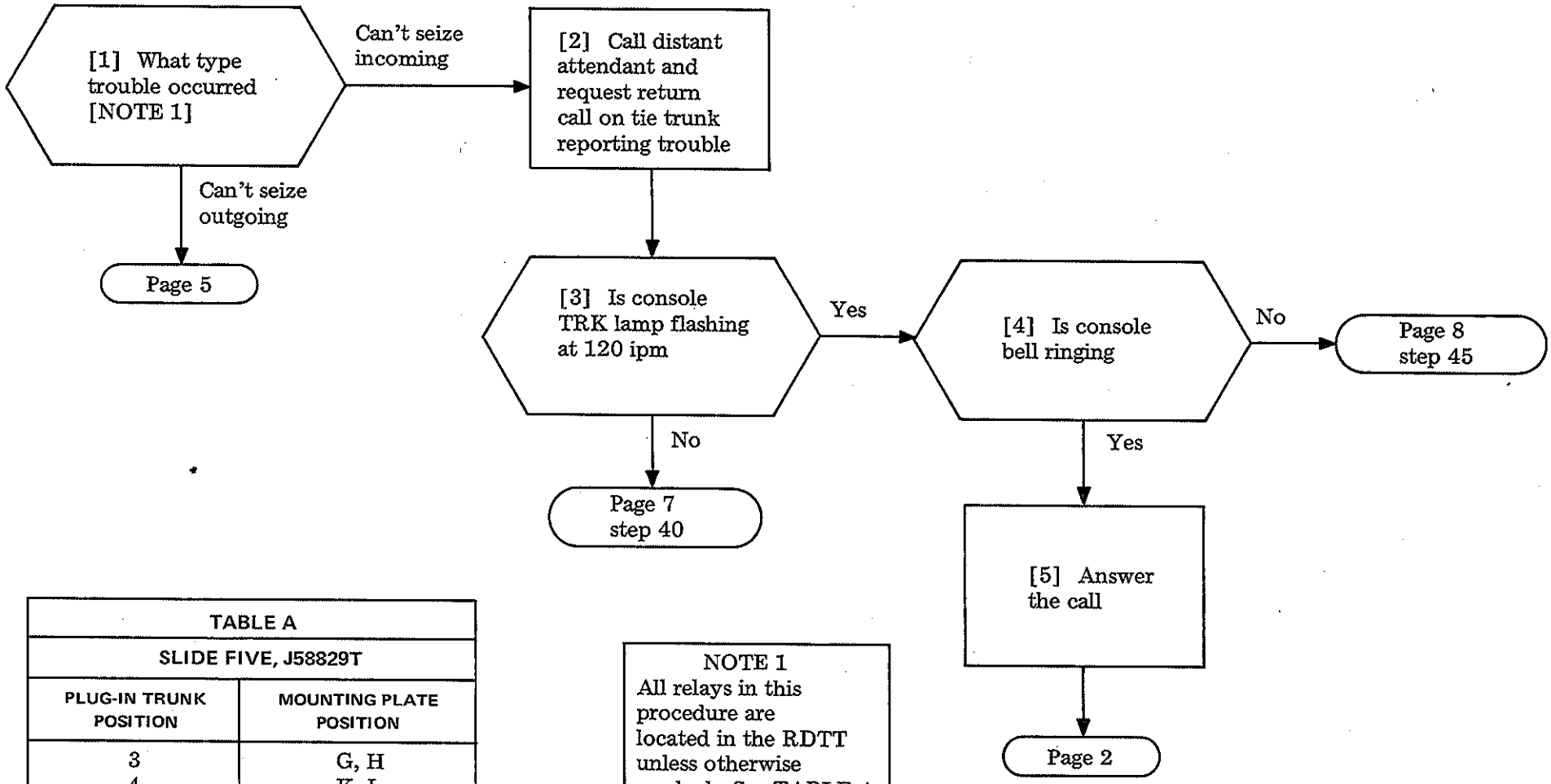

TABLE A	
SLIDE FIVE, J58829T	
PLUG-IN TRUNK POSITION	MOUNTING PLATE POSITION
3	G, H
4	K, L
8	T, U
9	W, X

NOTE 1
All relays in this procedure are located in the RDTT unless otherwise marked. See TABLE A.

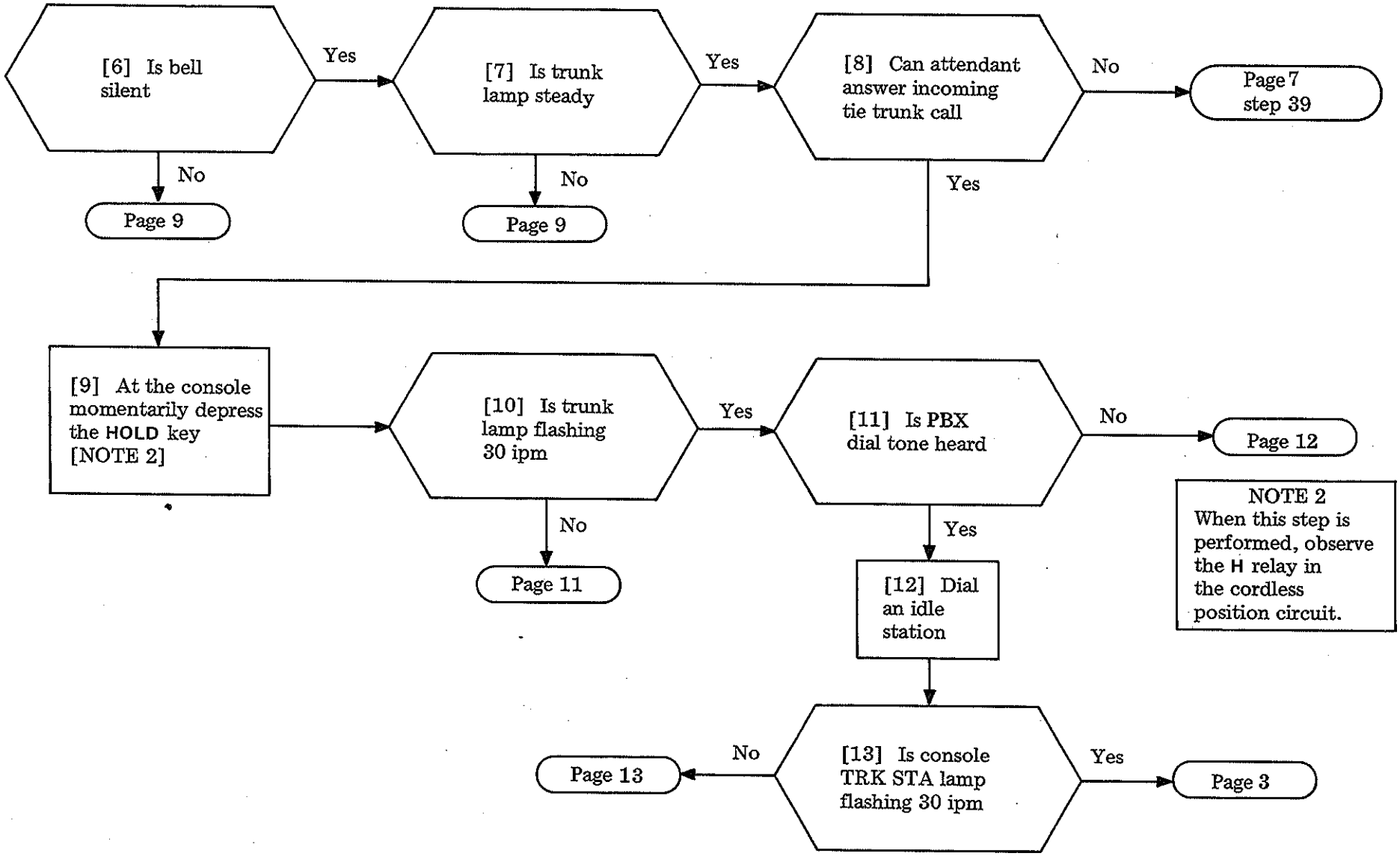

CLEAR RINGDOWN TIE TRUNK (RDTT) TROUBLE (SD-65756)

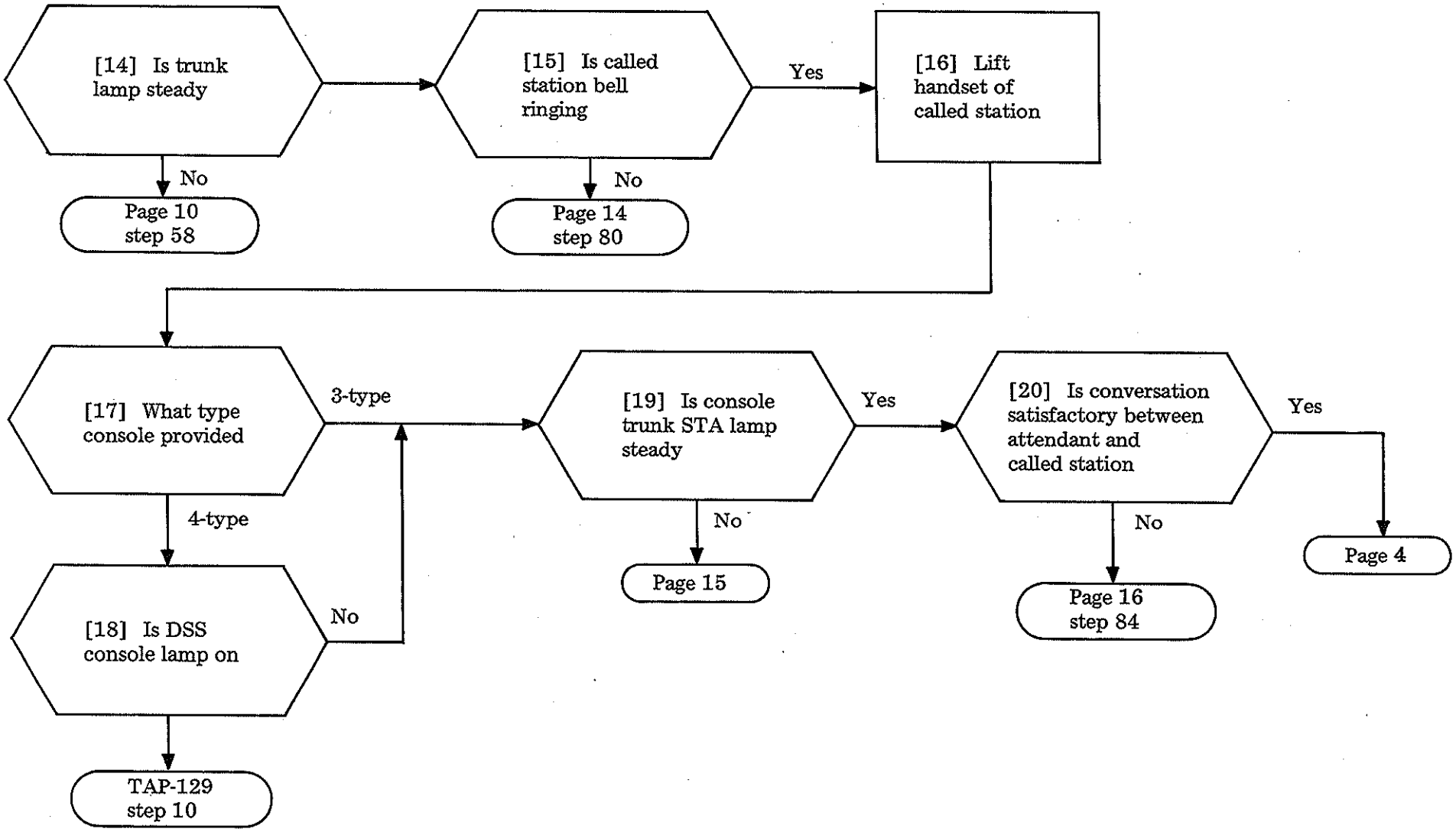

CLEAR RINGDOWN TIE TRUNK (RDTT) TROUBLE (SD-65756)

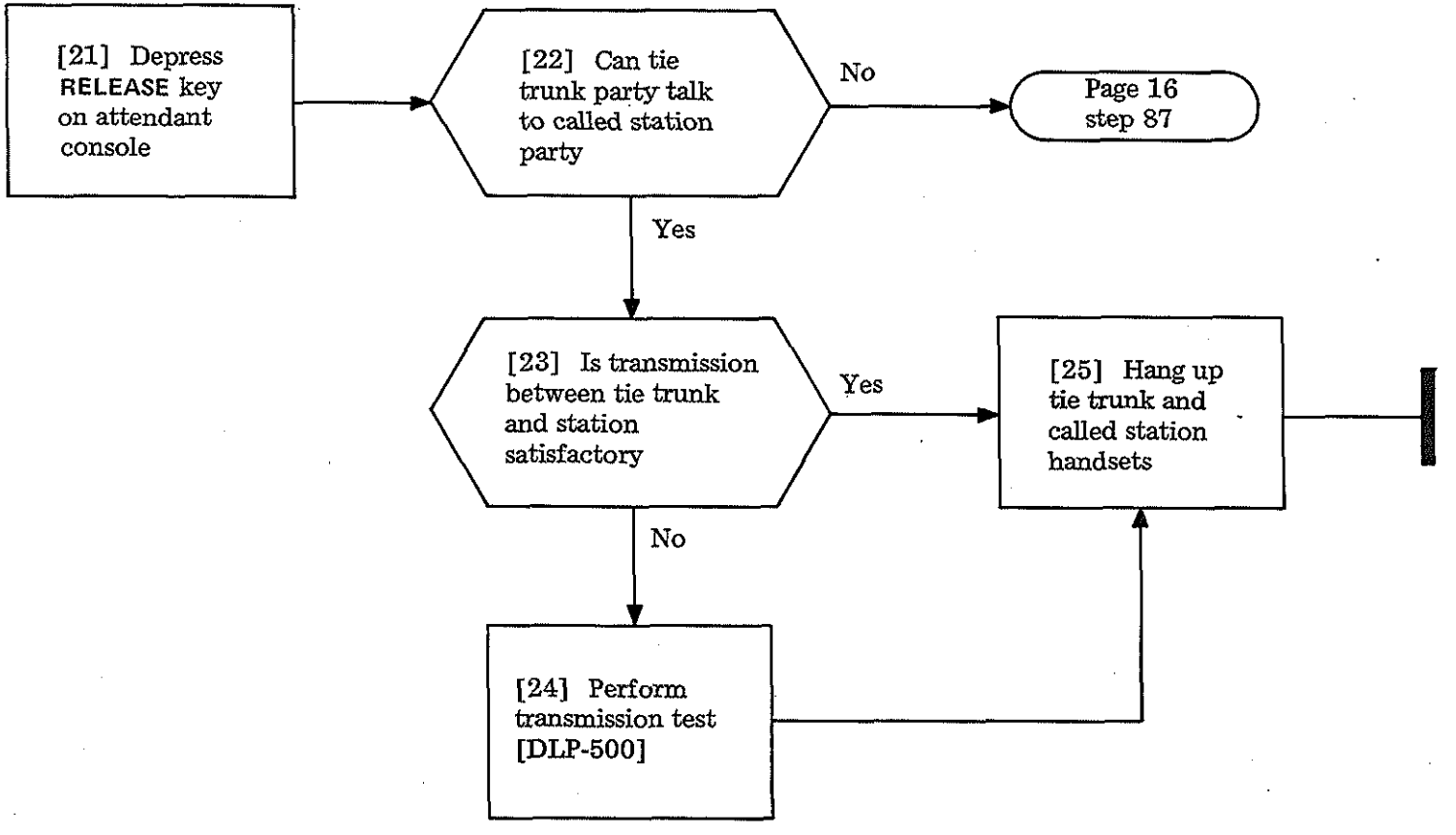

CLEAR RINGDOWN TIE TRUNK TROUBLE (RDTT) TROUBLE (SD-65756)

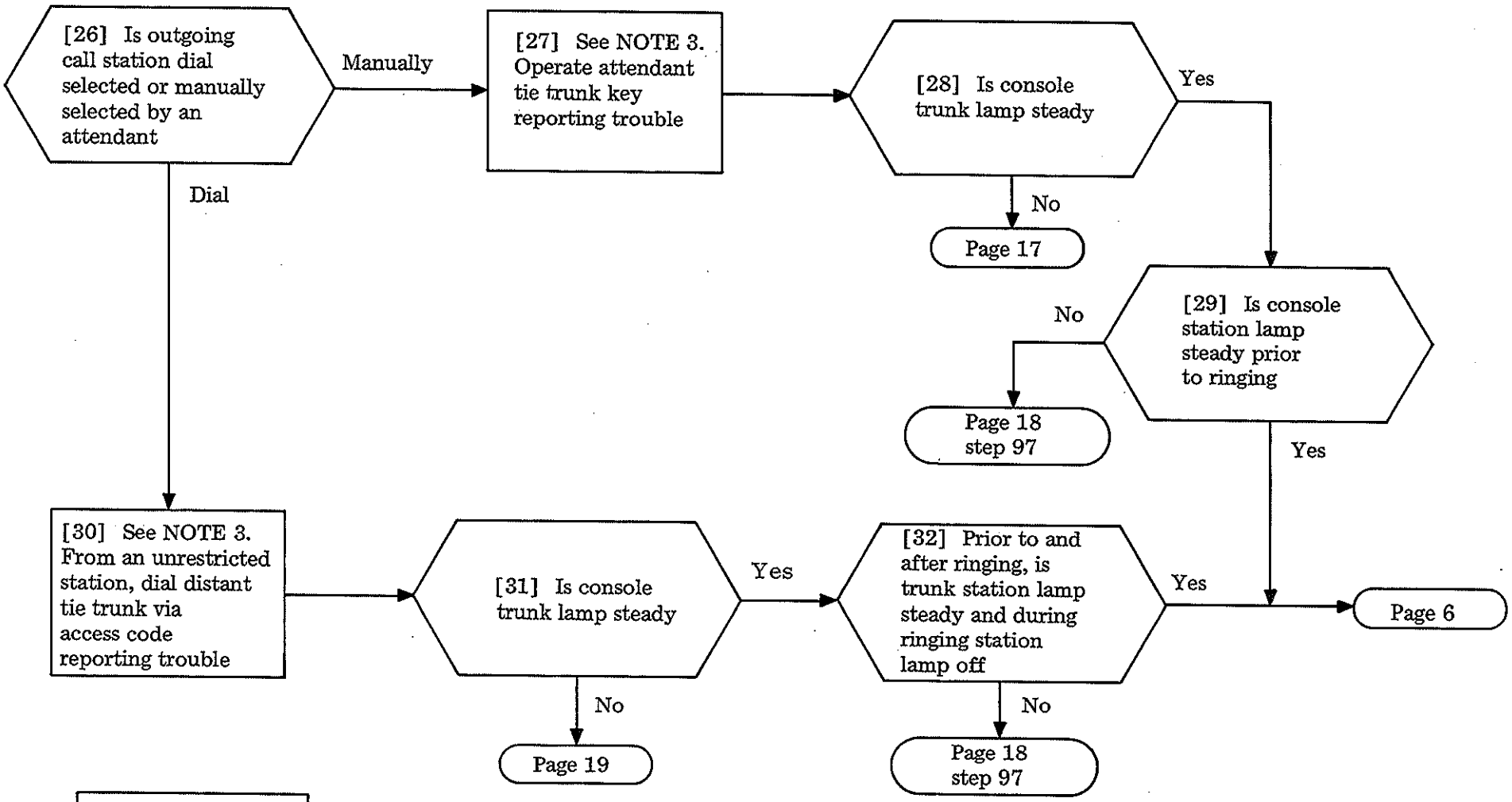

NOTE 3
While performing this step, observe relays T, T1, TC, S1 and SR in RDTT.

CLEAR RINGDOWN TIE TRUNK (RDTT) TROUBLE (SD-65756)

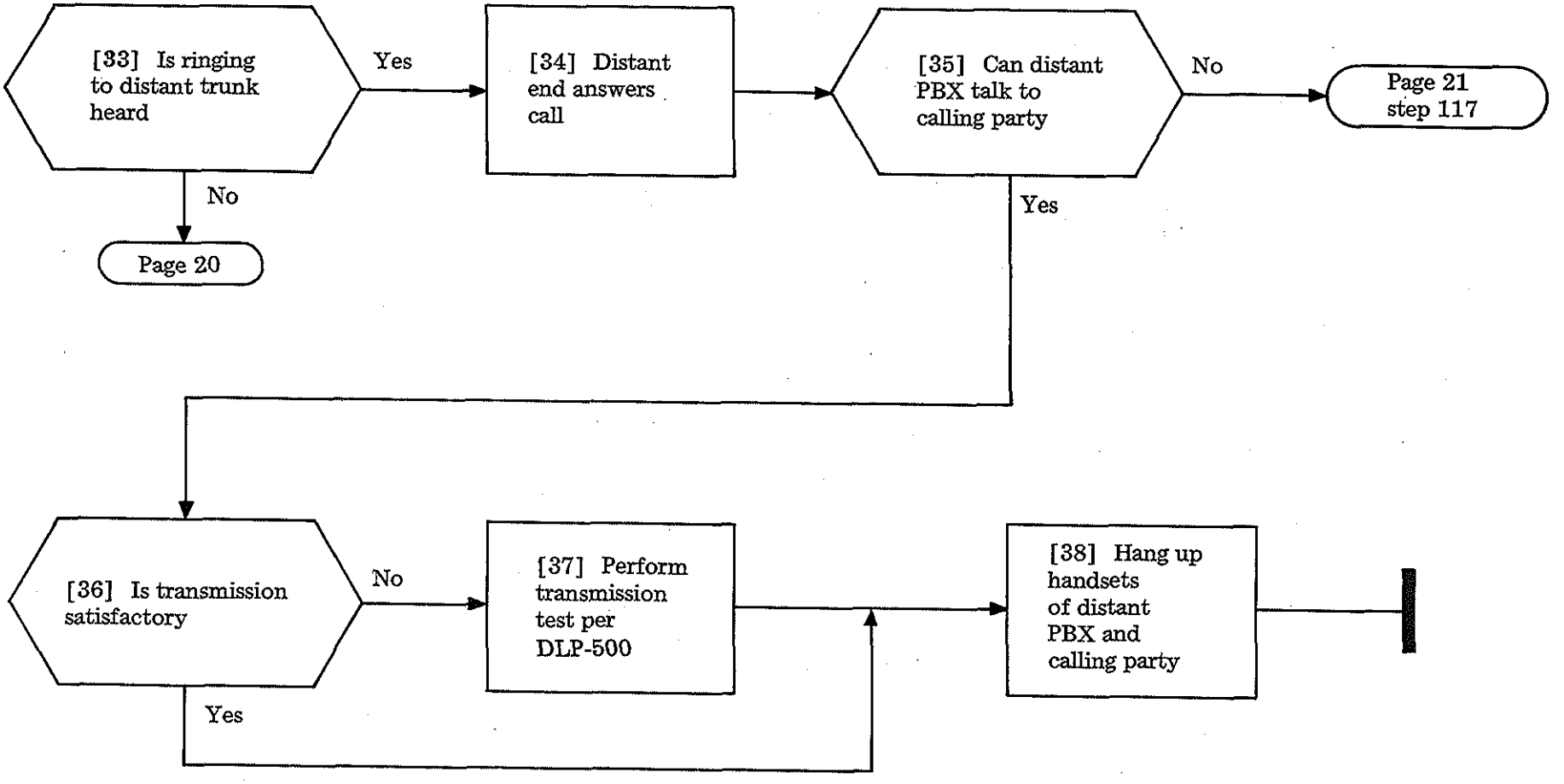

CLEAR RINGDOWN TIE TRUNK (RDTT) TROUBLE (SD-65756)

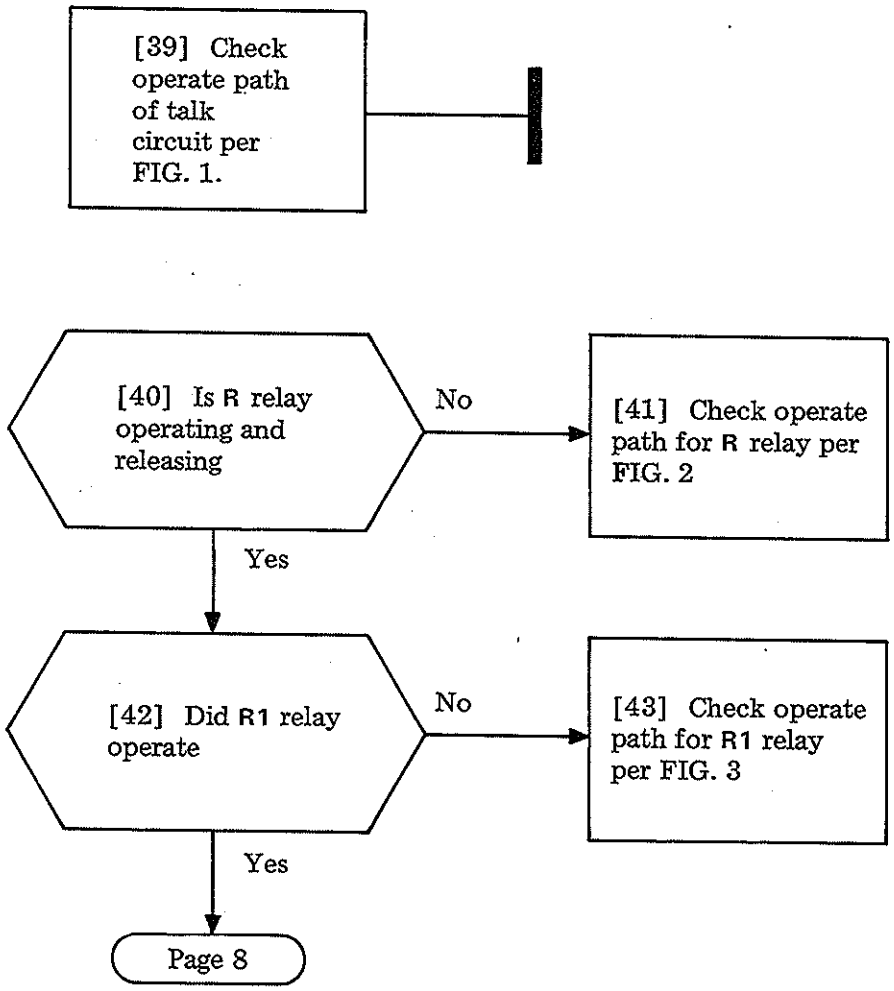

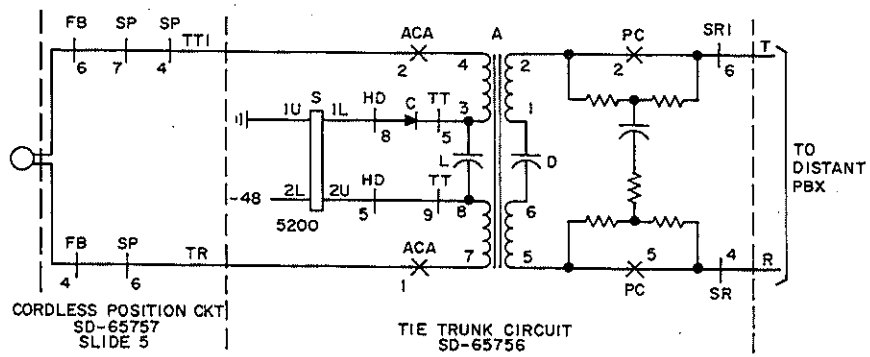

FIG. 1

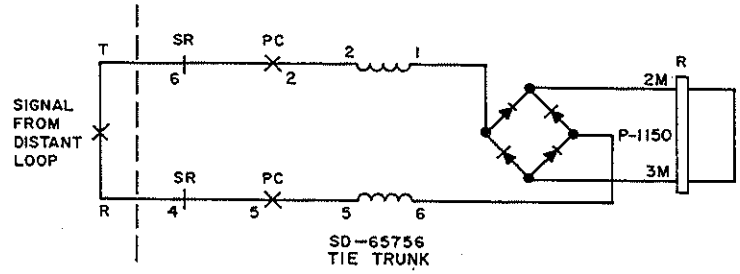

FIG. 2

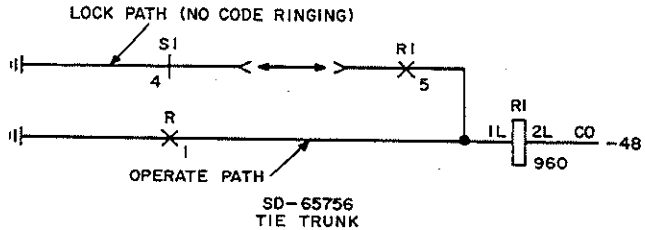

FIG. 3

Issue 1	May 1975
551-100-101	TAP
PAGE 7 of 21	150

CLEAR RINGDOWN TIE TRUNK TROUBLE (RDTT) TROUBLE (SD-65756)

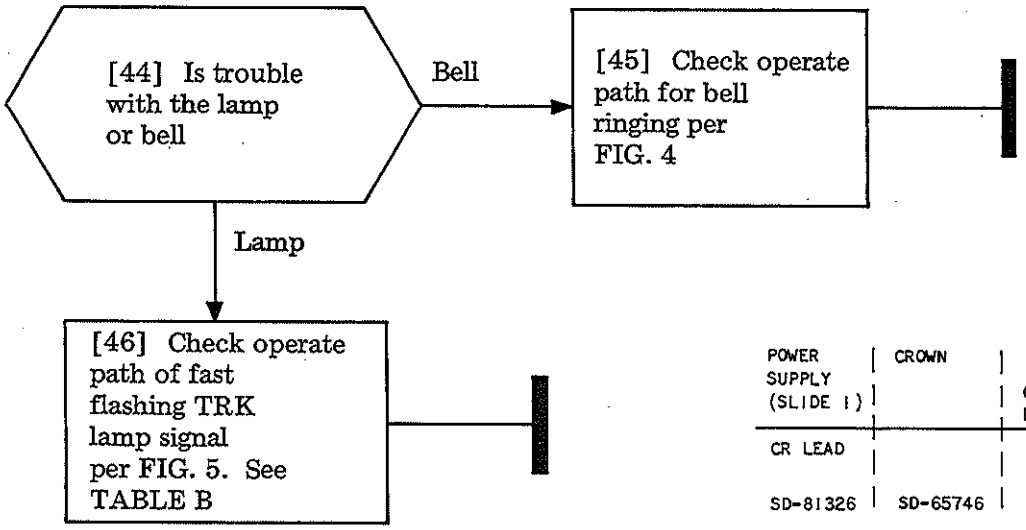

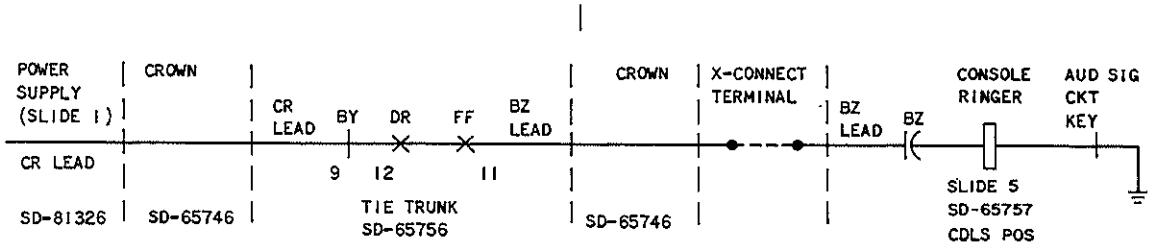

FIG. 4

TABLE B				
LEADS FROM INTERRUPTER TO CO TRUNK		SLIDE 5		LAMP SIGNAL
0, 2, 4 6, 8	1, 3, 5, 7, 9	PLUG	PIN	
	FF1			120 ipm
FF2				

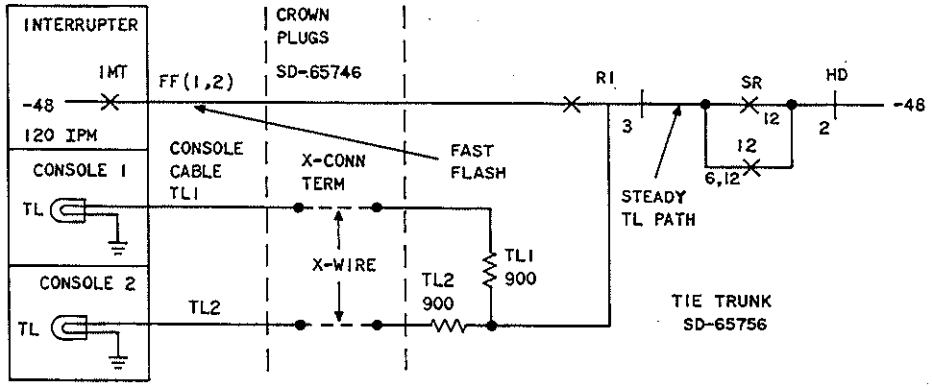

FIG. 5

CLEAR RINGDOWN TIE TRUNK (RDTT) TROUBLE (SD-65756

[47] Did ACA relay operate and lock

No → [48] Check lock and operate path for ACA relay FIG. 6

Yes ↓

[49] Did AC relay operate and lock

No → [50] Check lock and operate path for AC relay per FIG. 6

Yes ↓

[51] Did S relay operate and lock

No → [52] Check lock and operate path for S relay per FIG. 7

Yes ↓

[53] Did LO relay operate and lock

No → [54] Check lock and operate path for LO relay per FIG. 8

Yes ↓

Page 10

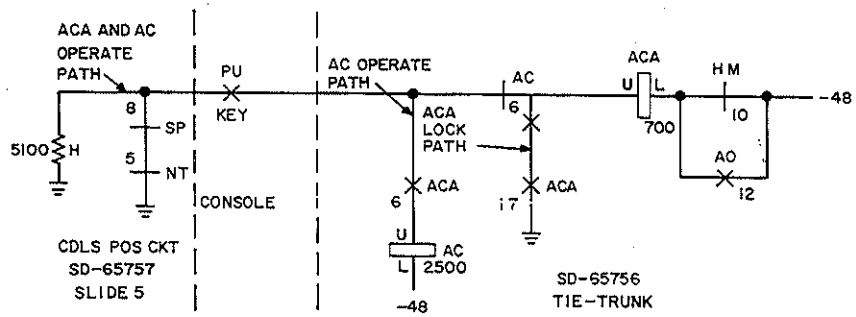

FIG. 6

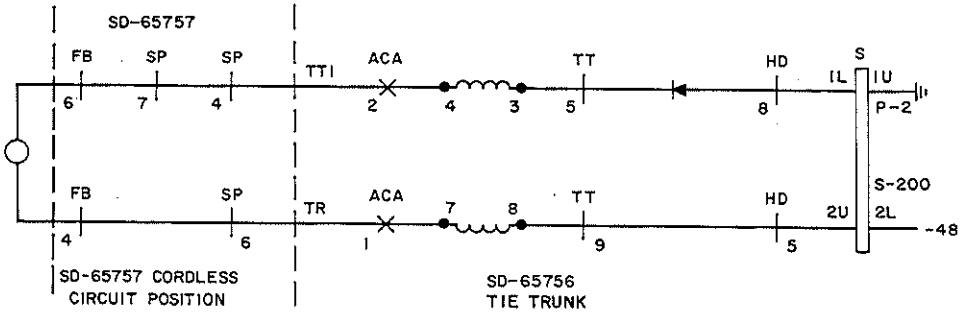

FIG. 7

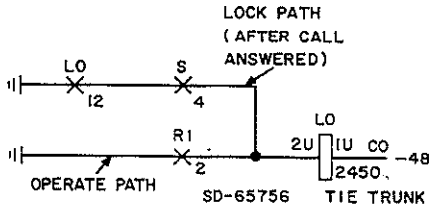

FIG. 8

CLEAR RINGDOWN TIE TRUNK (RDTT) TROUBLE (SD-65756)

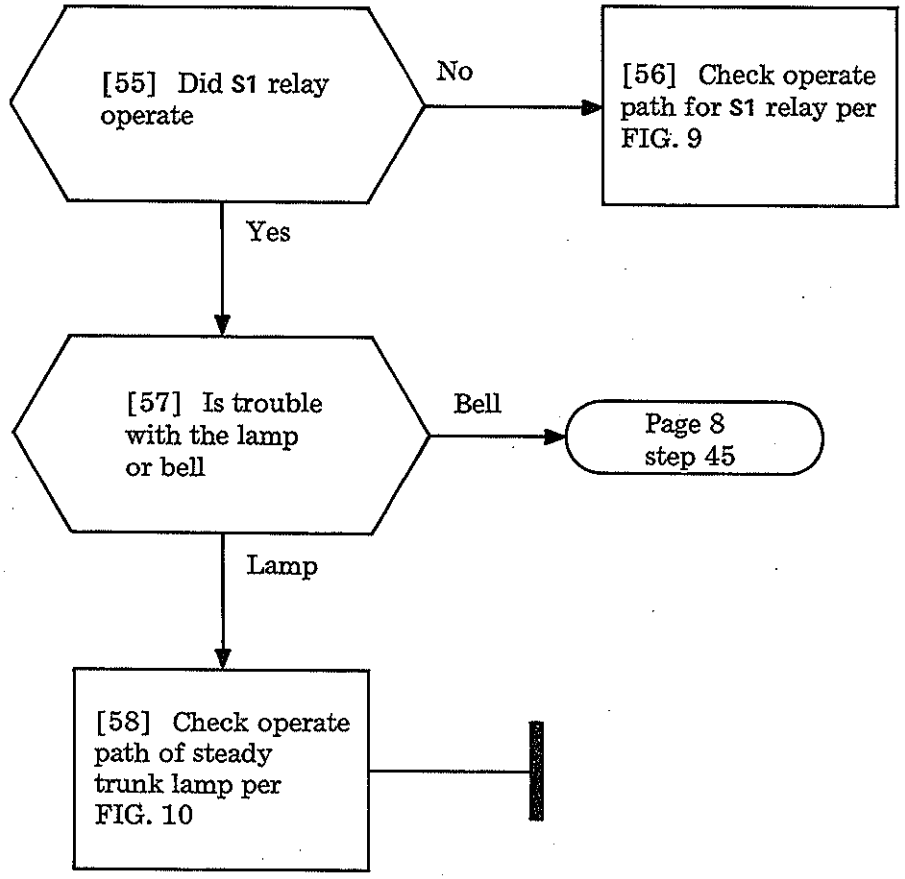

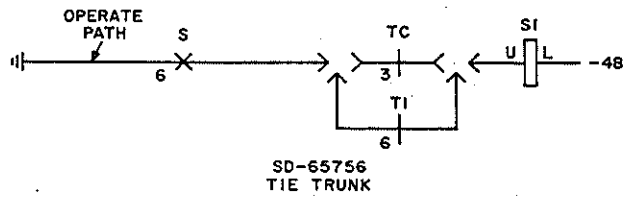

FIG. 9

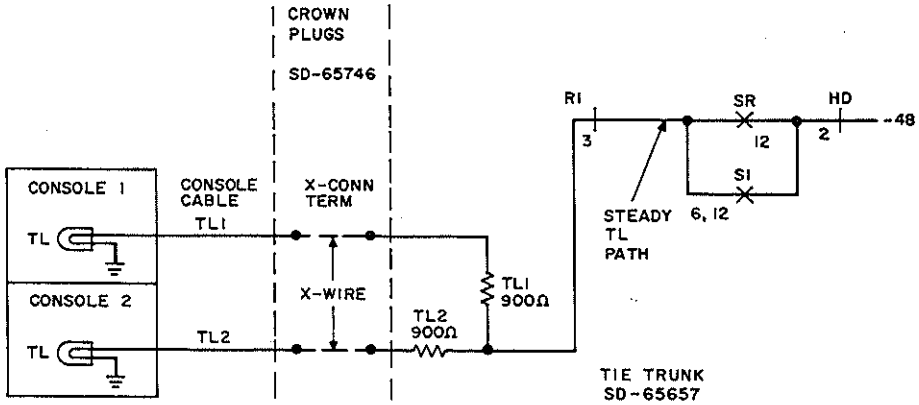

FIG. 10

CLEAR RINGDOWN TIE TRUNK (RDTT) TROUBLE (SD-65756)

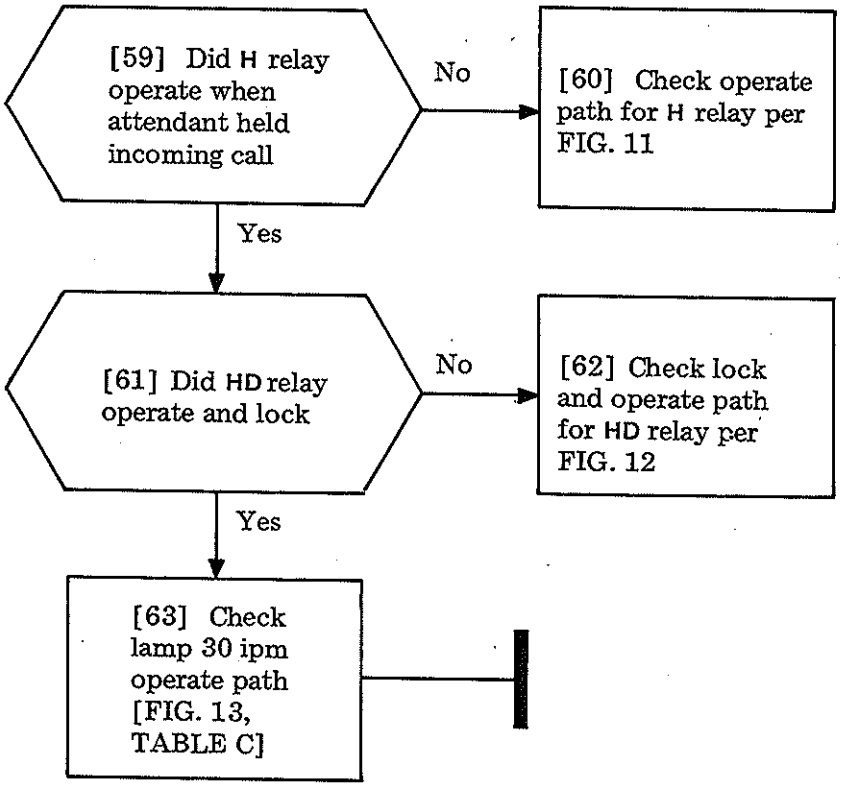

TABLE C				
LEADS FROM INTERRUPTER TO CO TRUNK		SLIDE 5		LAMP SIGNAL
0, 2, 4, 6, 8	1, 3, 5, 7, 9	PLUG	PIN	
	SF1	C	0	30 ipm
SF2		F	1	

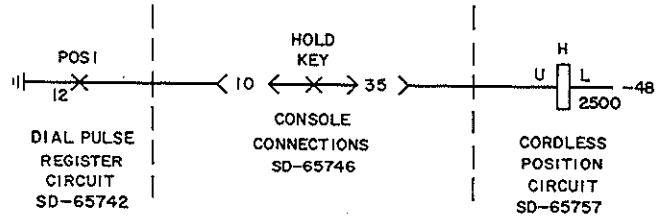

FIG. 11

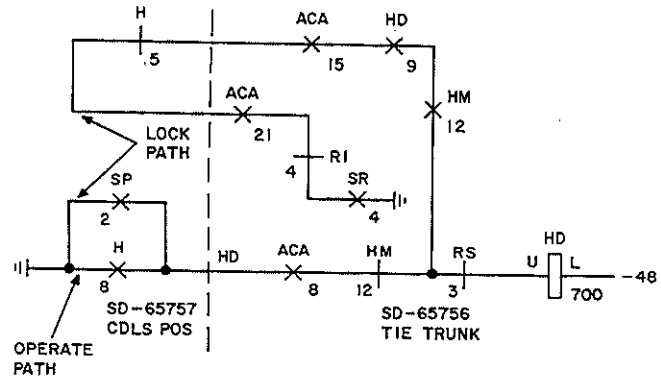

FIG. 12

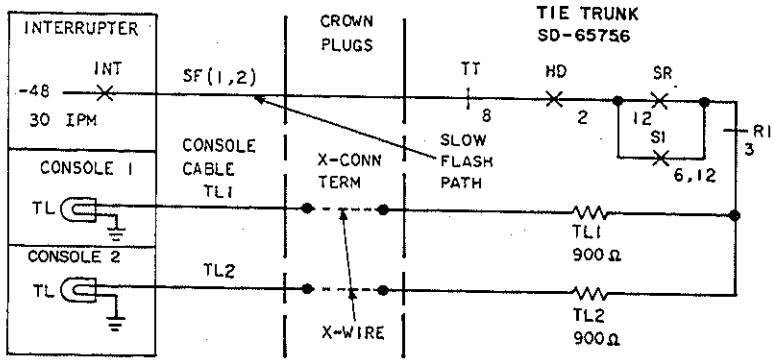

FIG. 13

CLEAR RINGDOWN TIE TRUNK (RDTT) TROUBLE (SD-65756)

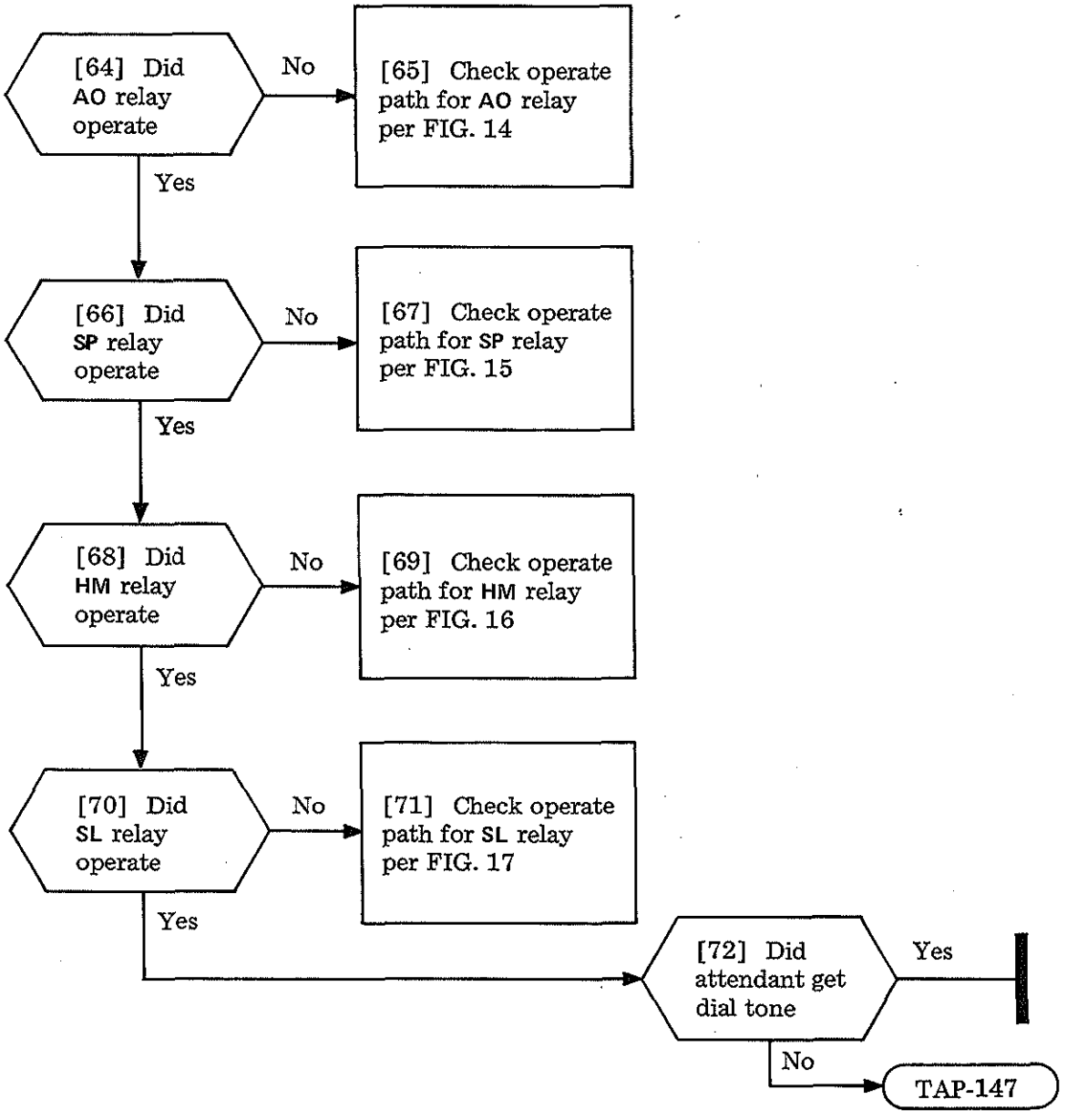

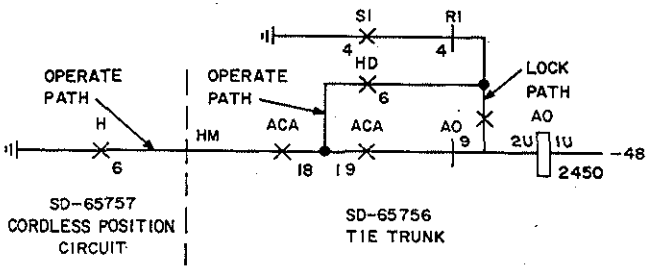

FIG. 14

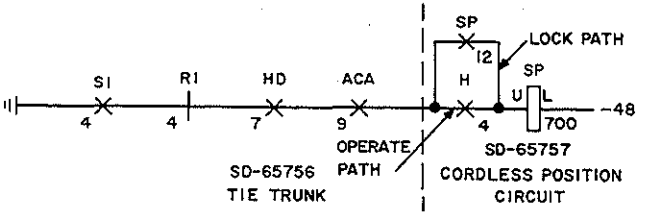

FIG. 15

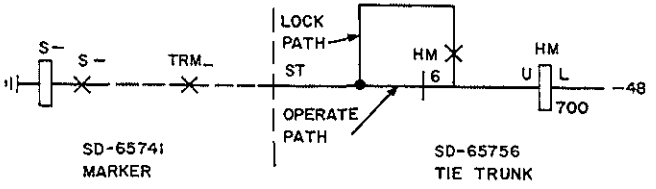

FIG. 16

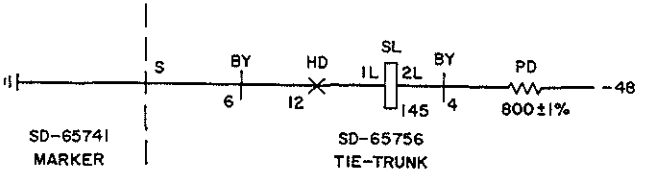

FIG. 17

CLEAR RINGDOWN TIE TRUNK (RDTT) TROUBLE (SD-65756)

[73] Did P relay operate and lock after dialing completed

No → [74] Check lock and operate path for P relay per FIG. 18

Yes ↓

[75] Did MC relay operate and lock

No → [76] Check lock and operate path for MC relay per FIG. 19

Yes ↓

[77] Did RS relay operate and lock

No → [78] Check lock and operate path for RS relay FIG. 20

Yes ↓

Page 14 step 79

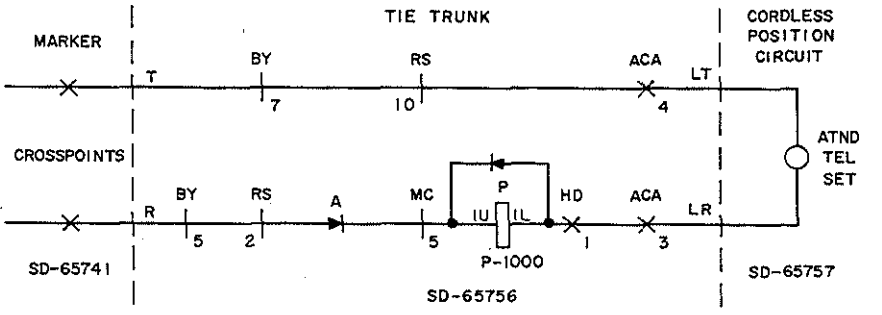

FIG. 18

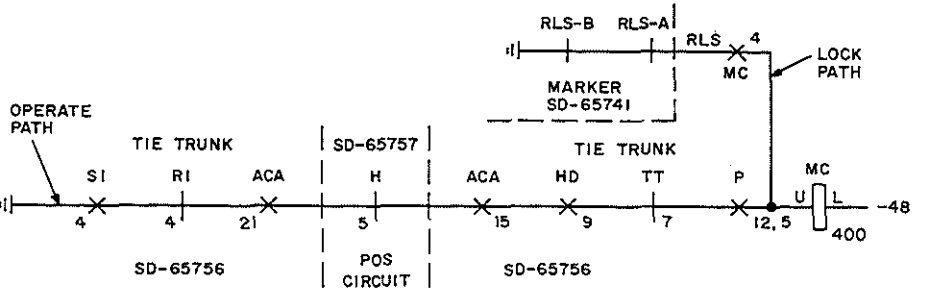

FIG. 19

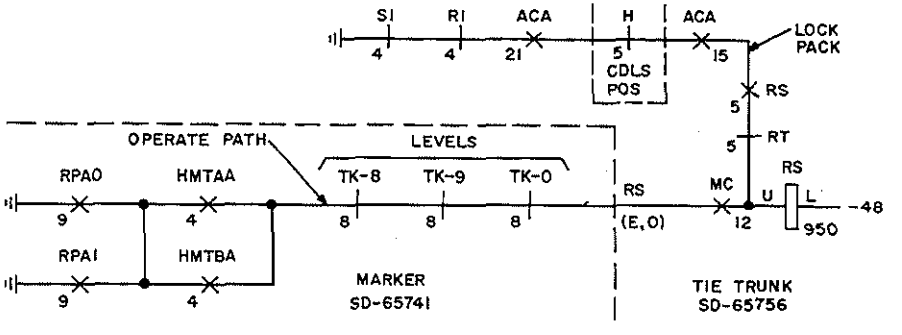

FIG. 20

[79] Check operate path of STA lamp 30 ipm signal per FIG. 21

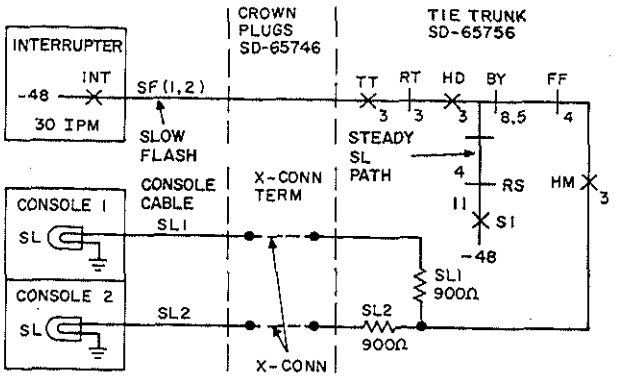

FIG. 21

[80] Check operate path for called station bell per FIG. 22

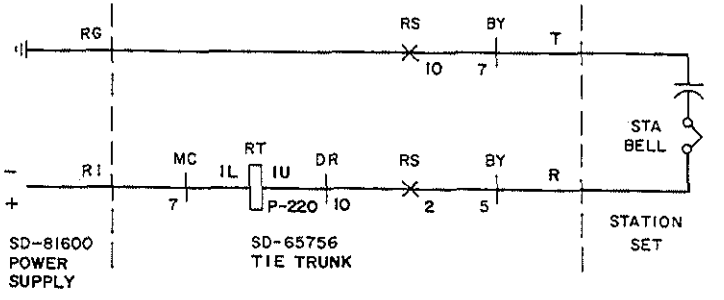

FIG. 22

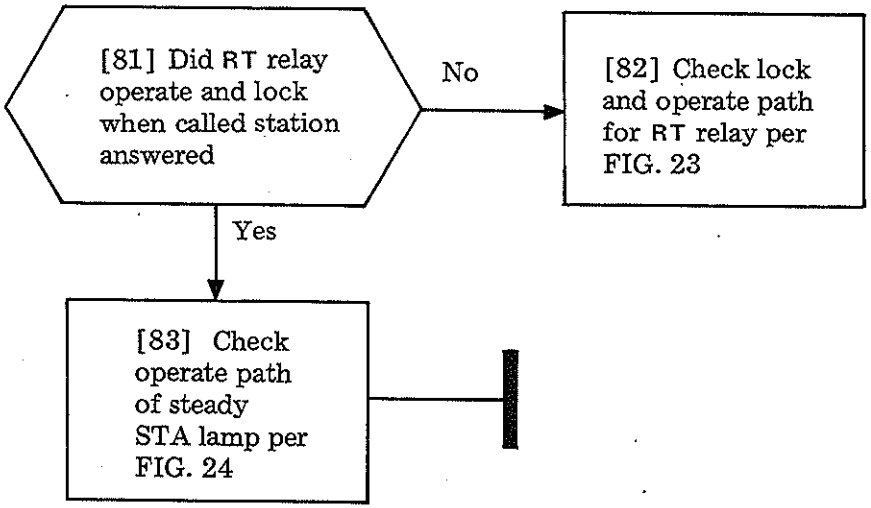

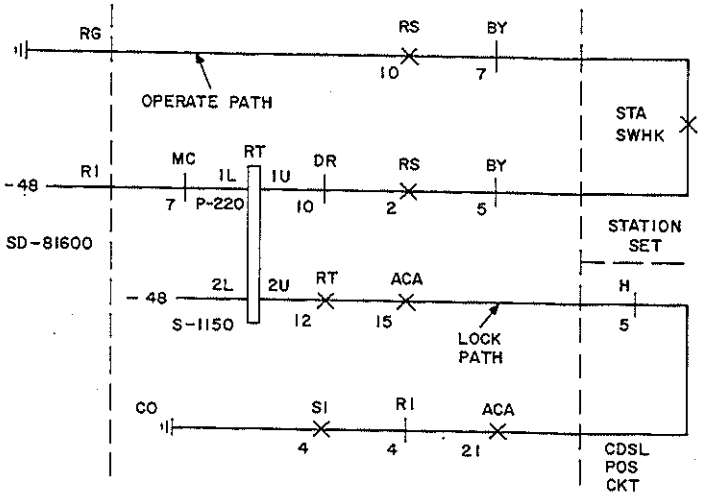

FIG. 23

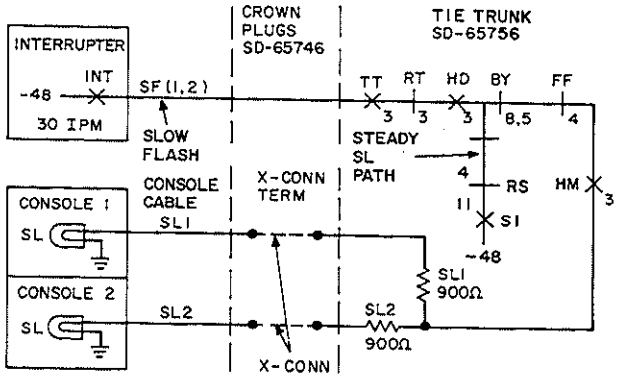

FIG. 24

CLEAR RINGDOWN TIE TRUNK TROUBLE (RDTT) TROUBLE (SD-65756)

[84] Did FB in cordless position circuit relay operate and lock

No → [85] Check lock and operate path for FB relay per FIG. 25

Yes → [86] Check operate path between attendant and station per FIG. 26

[87] Check talk circuit between tie trunk and station per FIG. 27

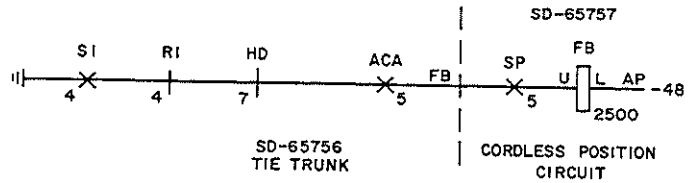

FIG. 25

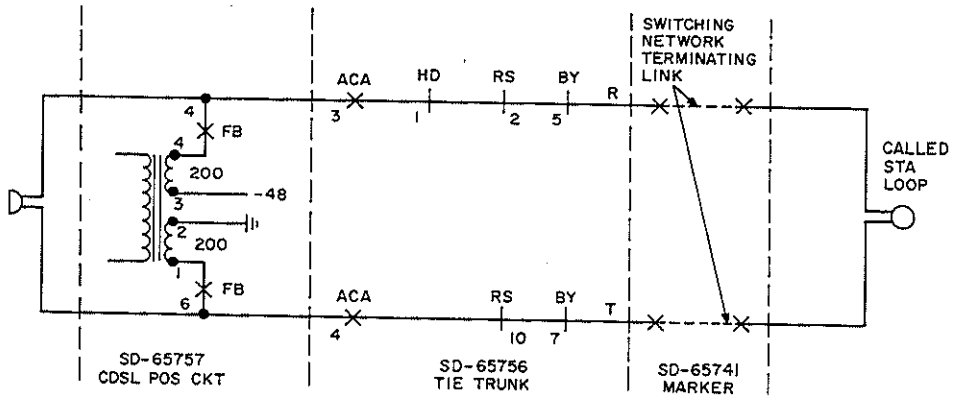

FIG. 26

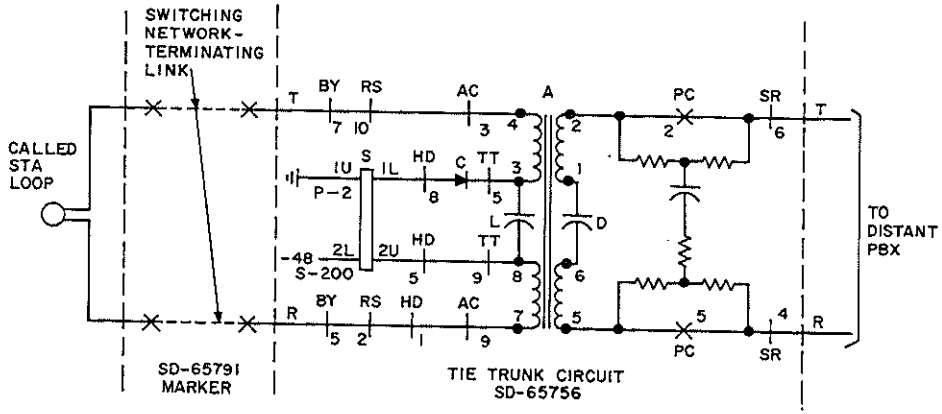

FIG. 27

CLEAR RINGDOWN TIE TRUNK TROUBLE (RDTT) TROUBLE (SD-65756)

[88] Did ACA relay operate and lock

No → [89] Check lock and operate path for ACA relay per FIG. 28

Yes ↓

[90] Did AC relay operate and lock

No → [91] Check lock and operate path for AC relay per FIG. 28

Yes ↓

[92] Did S relay operate and lock

No → [93] Check lock and operate path for S relay per FIG. 29

Yes ↓

[94] Did S1 relay operate and lock

No → [95] Check lock and operate path for S1 relay per FIG. 30

Yes ↓

Page 18 step 96

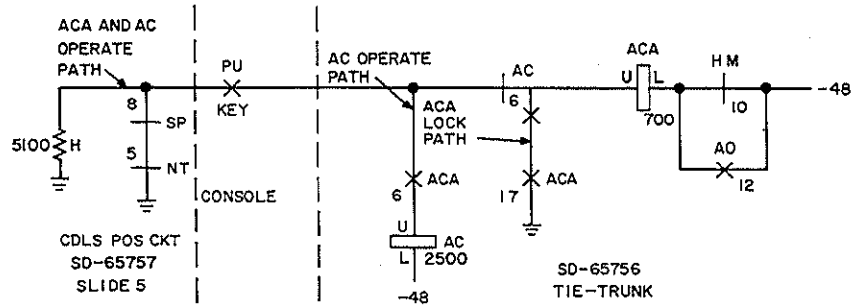

FIG. 28

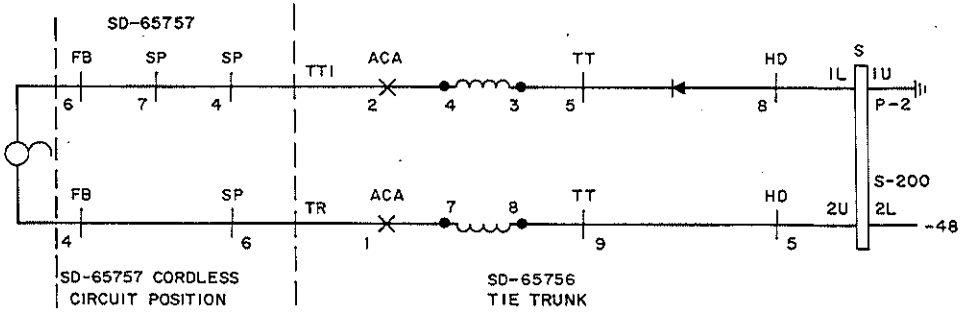

FIG. 29

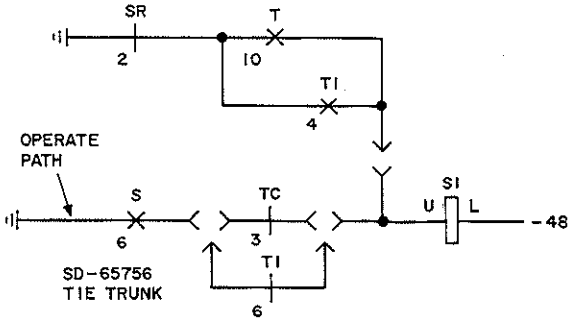

FIG. 30

CLEAR RINGDOWN TIE TRUNK (RDTT) TROUBLE (SD-65756)

[96] Check operate path of steady trunk lamp per FIG. 31

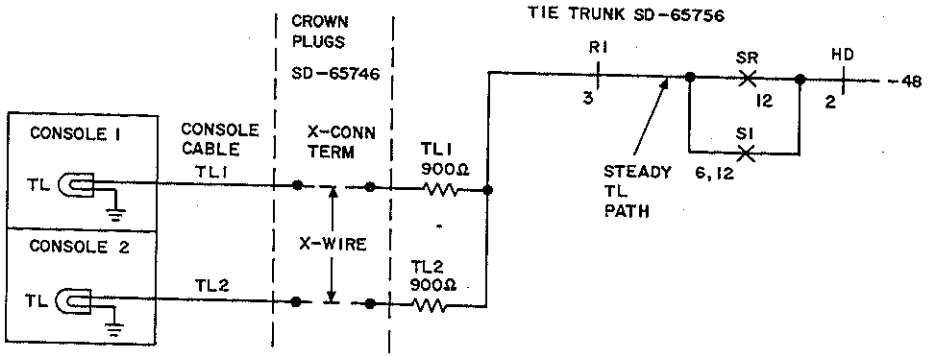

FIG. 31

[97] Check operate path of steady station lamp per FIG. 32

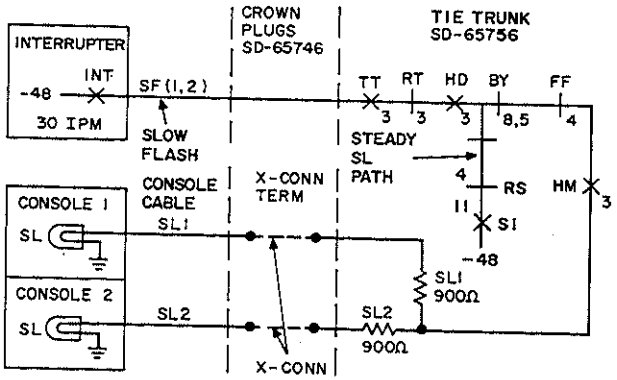

FIG. 32

[98] Did MC relay operate when PBX station dialed tie trunk access code

No → [99] Check operate path for MC relay per FIG. 33

Yes ↓

[100] Did HM relay operate and lock

No → [101] Check lock and operate path for HM relay per FIG. 33

Yes ↓

[102] Did S relay operate and lock

No → [103] Check lock and operate path for S relay per FIG. 34

Yes ↓

[104] Did S1 relay operate and lock

No → [105] Check lock and operate path for S1 relay per FIG. 35

Yes → Page 18 step 96

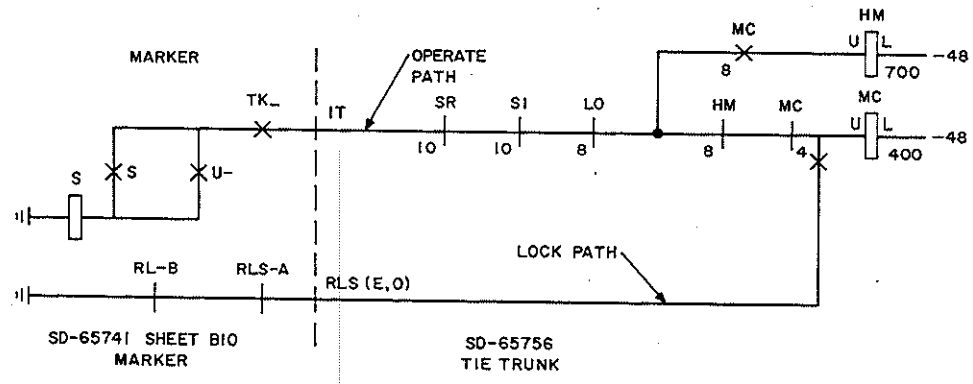

FIG. 33

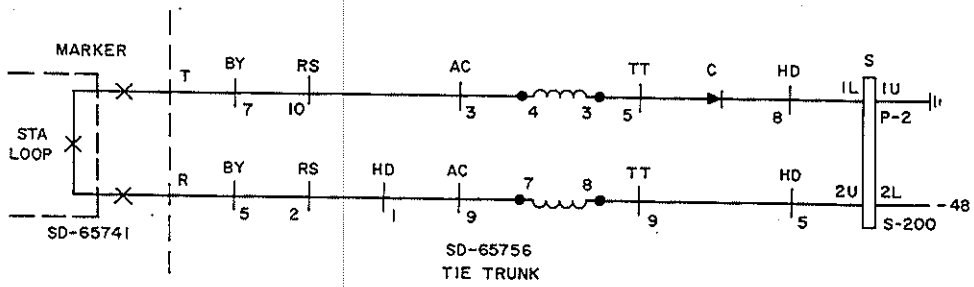

FIG. 34

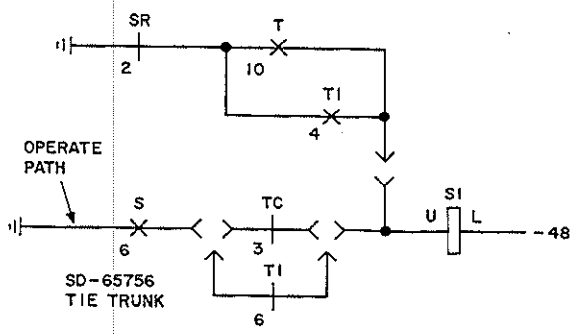

FIG. 35

CLEAR RINGDOWN TIE TRUNK (RDTT) TROUBLE (SD-65756)

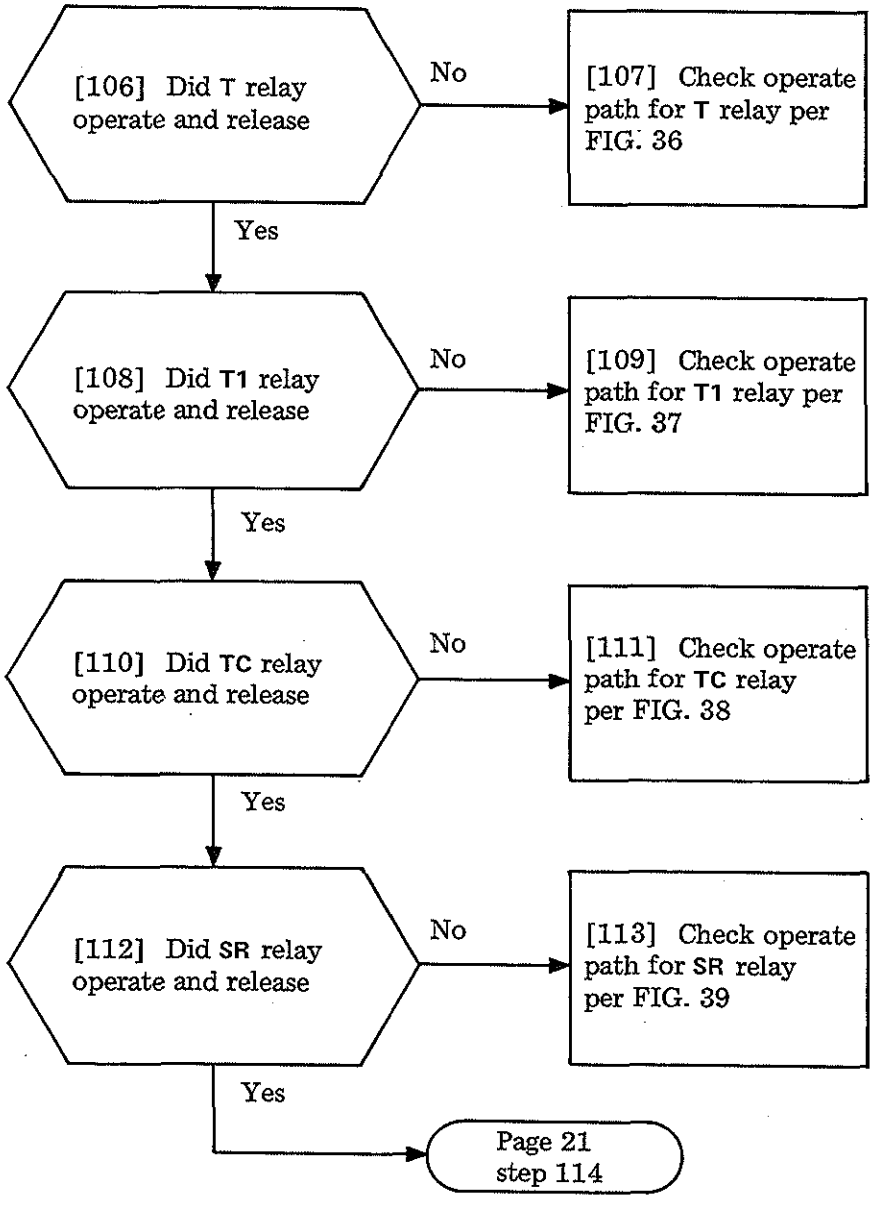

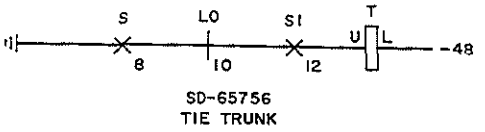

FIG. 36

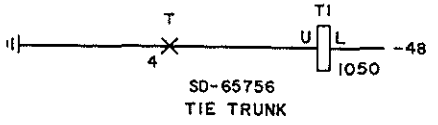

FIG. 37

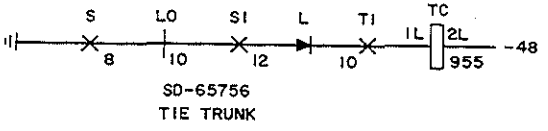

FIG. 38

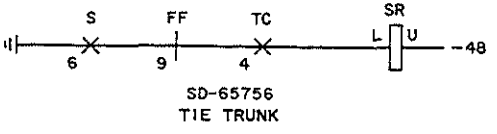

FIG. 39

CLEAR RINGDOWN TIE TRUNK TROUBLE (RDTT) TROUBLE (SD-65756)

[114] Did LO relay operate and lock during slow release of T, S1, T1, and SR relays

No → [115] Check lock and operate path for LO relay per FIG. 40

Yes → [116] Check ringing path of distant PBX per FIG. 41

[117] Was call dial or manually selected

Manually → [118] Check talk circuit between attendant and distant PBX per FIG. 42

Dial → [119] Check talk circuit between station and distant PBX per FIG. 43

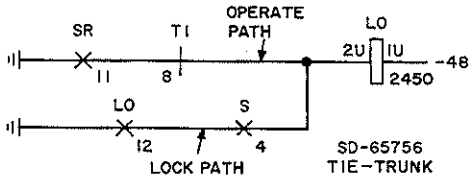

FIG. 40

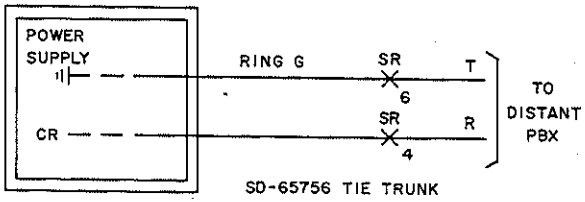

FIG. 41

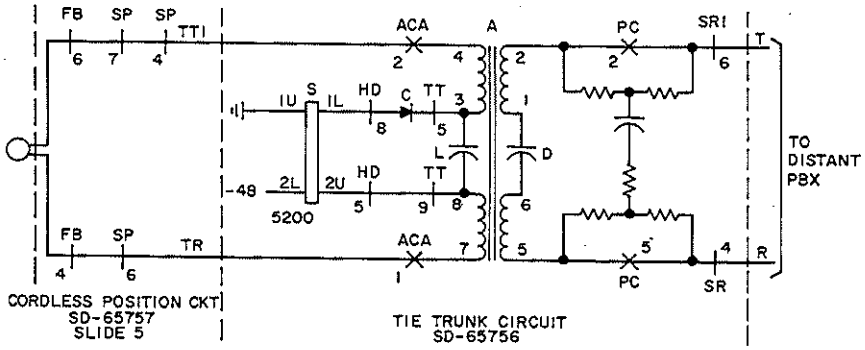

FIG. 42

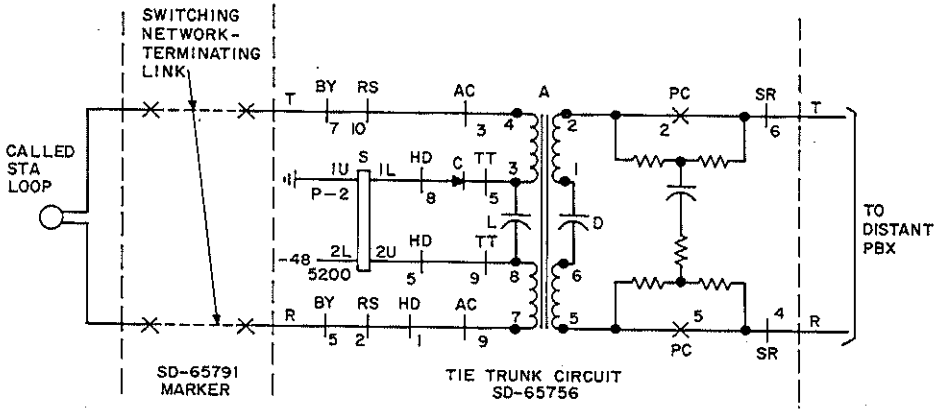

FIG. 43

CLEAR RINGDOWN TIE TRUNK TROUBLE (RDTT) TROUBLE (SD-65756)

SUMMARY

Determine if a call initiated from test station 39 is completed through the switching network and station ringer. If the "can't be called" (CBC) station ringer sounds, the connection has been completed through the switching network. If the ringer is not heard, check to see if the line hold magnet (LHM) of the called station has operated and closed the associated vertical contacts to complete call through the crossbar switches. If CBC failure is intermittent or occurs to other stations, repeat test calls via each common circuit (junctor, dial pulse register, etc.) to isolate the defective equipment unit. Locate the fault using the figure or other reference given. This procedure assumes the marker and register function properly to provide dial tone and may be used to find trouble on station-to-station, dial repeating tie trunk-to-station, and attendant trunk-to-station (junctor) calls.

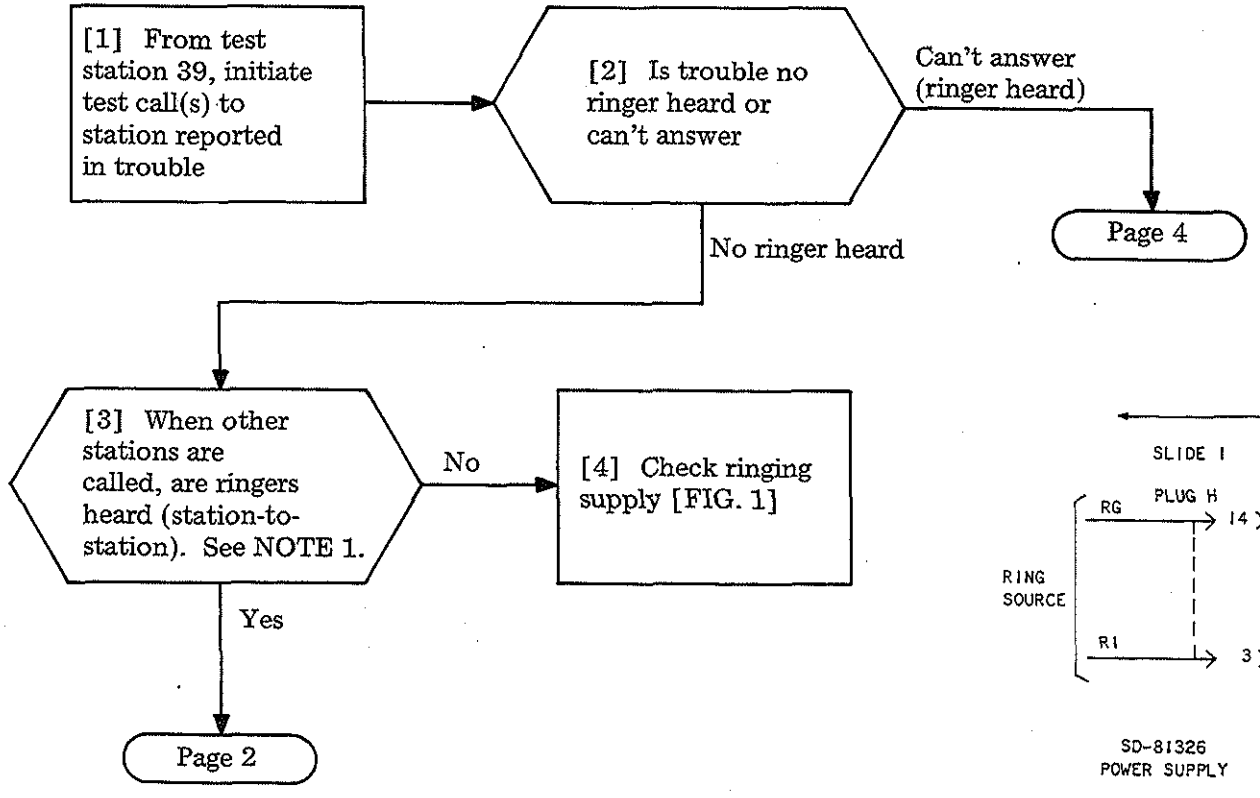

NOTE 1
Steps 3 through 9 may require reestablishing test call(s) to point of failure.

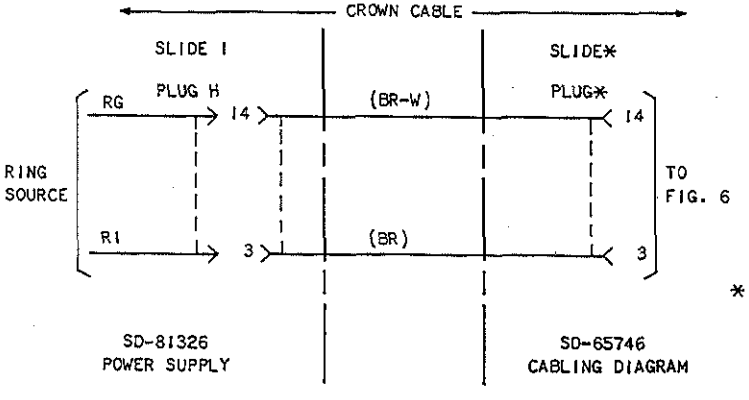

* PLUG	SLIDE
H	3
U	4

FIG. 1

CLEAR STATION CAN'T BE CALLED TROUBLE (SD-65750)

[5] Does trouble occur at times to other stations [NOTE 1]

No → [6] Verify that line hold magnet locked operated [TABLE A, FIG. 2] to close cross-points to called station

Yes ↓

[7] Can the station in trouble always call other stations [NOTE 1]

Yes → [8] Check called station set ringer circuit and ringer control (when provided) at base of set

No ↓

[9] Do stations ever get wrong numbers on calls to other stations within the PBX [NOTES 1 and 2]

Yes → Dial pulse register trouble → TAP-146

No → Trouble associated with one junctor → Page 3

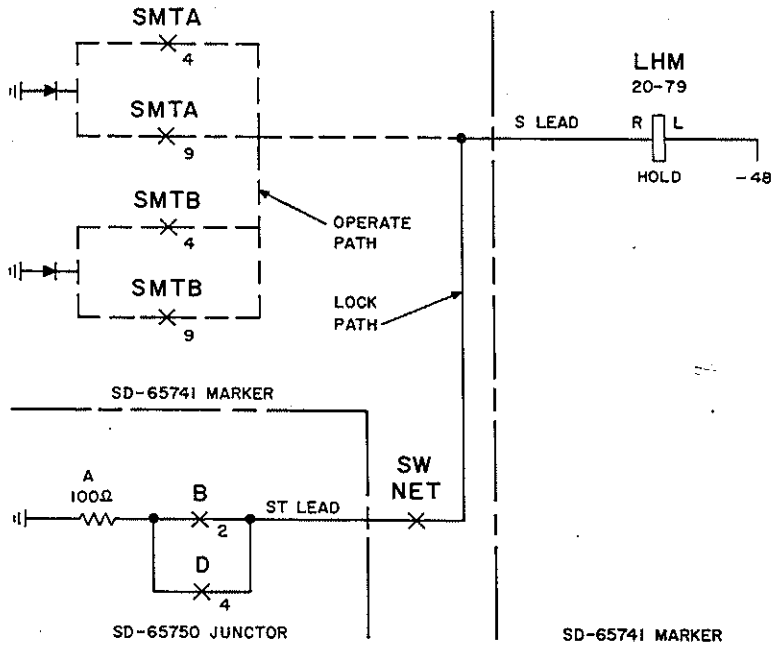

FIG. 2

TABLE A			
STATIONS	LINE HOLD MAG LOC		
	SLIDE	SWITCH	VERTICAL
20—29	2	2	0—9
30—39		3	
40—49	3	4	
50—59		5	
60—69	4	6	
70—79		7	

NOTE 2
On station-to-station calls, REG 0 will normally seize JCTR 0, 1, or 2 (in order) and REG 1 will normally seize JCTR 3, 4, or 5 (in order).

CLEAR STATION CAN'T BE CALLED TROUBLE (SD-65750)

[10] Are both originating and terminating junctor hold magnets (locate per TABLE B) operated, connecting links [FIG. 4]

No → [11] Check operate path of junctor hold magnet(s) [FIG. 3]

Yes ↓

[12] Is ringing tone heard by calling party

No → [13] Check ringing tone path [FIG. 5 and TABLE B]

Yes ↓

[14] Is ringer heard at called station.

No → [15] Check ringing path [FIG. 6] See TAD-163 for switching connections (typical)

Yes ↓

Ringing associated with junctor satisfactory

[16] Repeat steps 10 through 15 until all junctors have been tested or ringing failure is isolated

TABLE B					
JCTR	LOCATION				
	SLIDE	REL EQ MTG PLT	SW	HOLD MAG-VERTICAL ORIG	HOLD MAG-VERTICAL TERM
0	3	T	1	0	1
1				2	3
2		U		4	5
3	4	Y	8	1	2
4				3	4
5	3	U	1	6	7

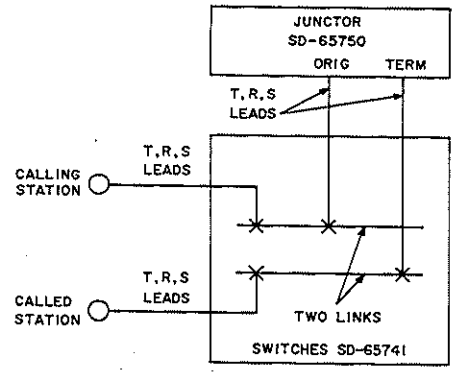

FIG. 4

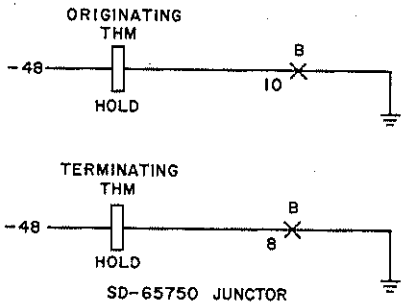

FIG. 3

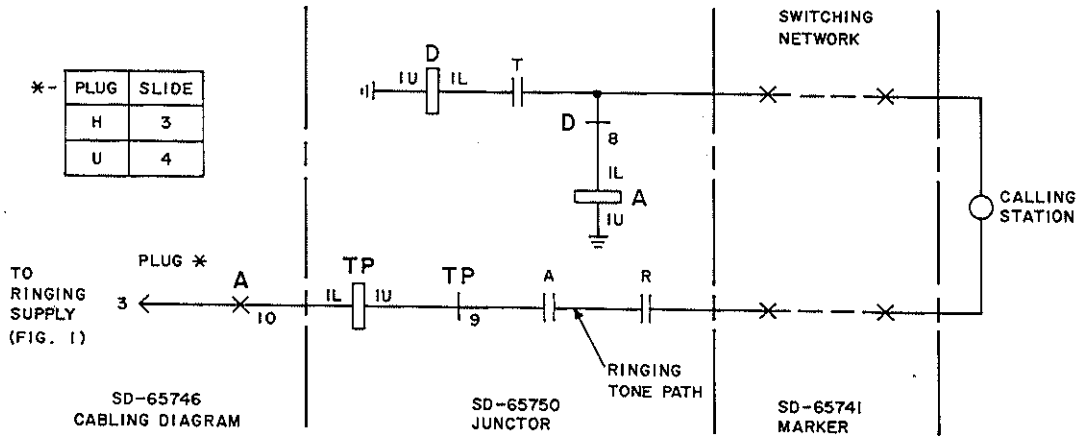

FIG. 5

CLEAR STATION CAN'T BE CALLED TROUBLE (SD-65750)

[17] Does TP relay operate on answer (Locate via TABLE C)

No → [18] Check operate path of TP relay [FIG. 6]

Yes ↓

[19] Was ringer silenced at called station

No → [20] Verify that 9B and 7B contacts of TP relay opened ringing circuit when TP operated [FIG. 6]

Yes ↓

[21] Is conversation satisfactory

No → [22] Check talking path [FIG. 7]. Talking battery is provided to calling station by A relay, and to called station by D relay

Yes ↓

[23] Repeat steps 17 through 23 until remaining junctors have been tested or "can't answer" failure isolated

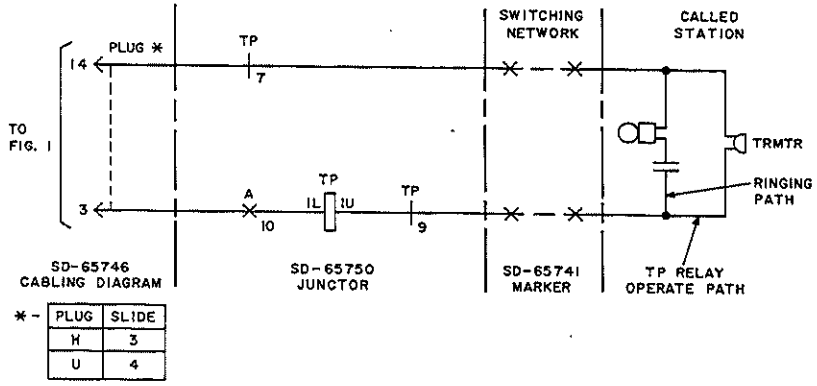

*-

PLUG	SLIDE
H	3
U	4

FIG. 6

TABLE C		
JCTR	REL LOC	
	SLIDE	MTG PLT
0	3	T
1		
2		U
3	4	Y
4		
5	3	U

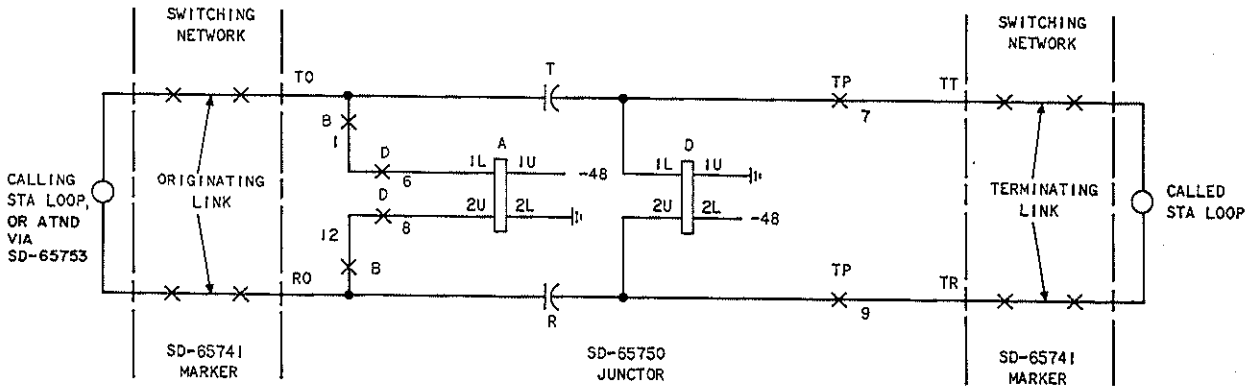

FIG. 7

CLEAR STATION CAN'T BE CALLED TROUBLE (SD-65750)

SUMMARY

Initiate test "dial 9—" call(s) from either the station reporting "can't call out" (CCO) trouble or from test station 39 (slide 2), as indicated. Via test call(s) or other furnished information (attendant, listed directory number, etc.), seize the defective trunk and locate the associated equipment [NOTE 1]. Find the trouble using the figure or other reference given. This procedure assumes:

- Station(s) associated with the trouble have access to the trunk(s) dialed.
- There is no trouble in the station wiring or set(s).
- CO trunks are modified for ring ground start.

After defective unit has been identified, repeat seizure (dial 9 or 9—) as required to observe operation and/or release of relay(s), as indicated by step(s) of this procedure. Listed directory number of seized defective trunk can be identified by observing key designation associated with steady station lamp (red) and steady trunk lamp (white) at console.

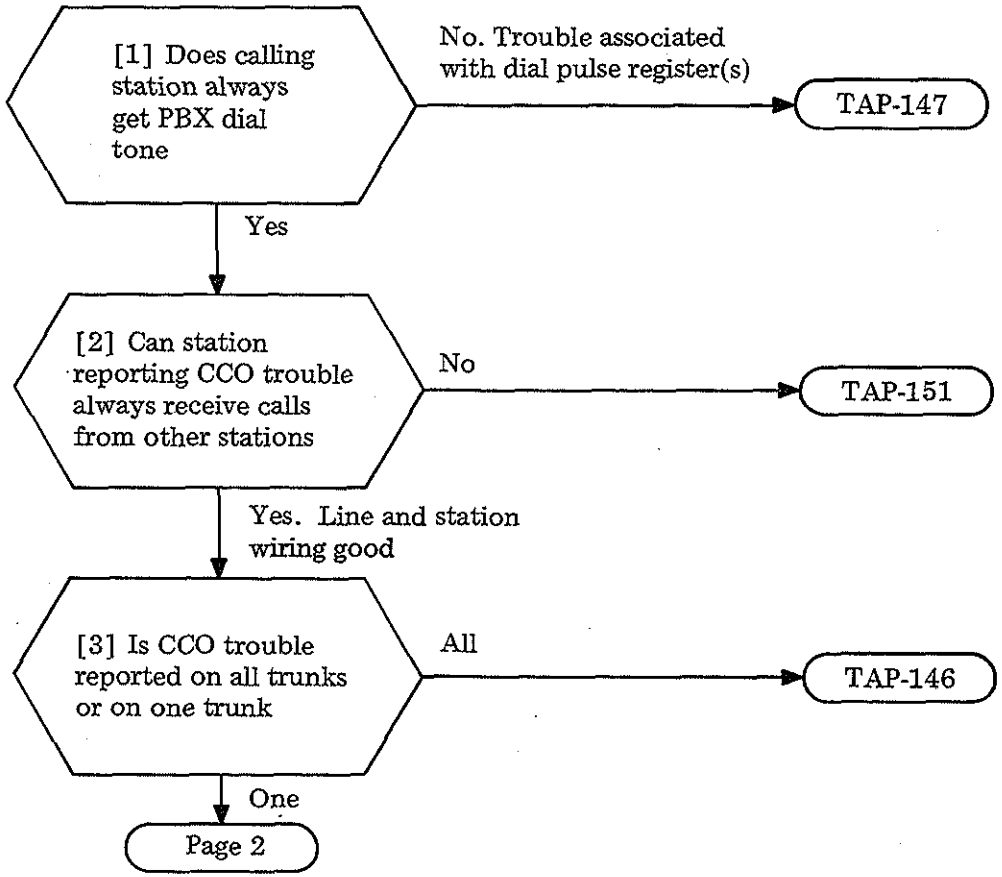

NOTE 1

The seized CO trunk equipment unit location within slide 5 [FIG. 1] can be identified by observing the steadily lighted CO TRK (0-9) lamp of the make-busy and busy display unit (top of slide 2), if provided, or by observing which HM relay operated when the trunk access code (9 or 9—) is dialed.

[4] Initiate test calls from test station 39 (slide 2) until defective trunk unit [FIG. 1] is seized [NOTES 2 and 3]

Defective trunk identified

NOTE 2
If customer needs permit, good CO trunks (0-9) can be busied out after testing. Pull out MB key of make-busy and busy display unit at top of slide 2 (if provided) or block operated SR relay in trunk unit [FIG. 1]. Restore MB key(s) when testing is complete.

NOTE 3
The seized CO trunk equipment unit location in slide 5 [FIG. 1] can be identified by observing the steadily lighted CO TRK (0-9) lamp of the make-busy and busy display unit (top of slide 2), if provided, or by observing which HM relay operated when the trunk access code (9 or 9—) was dialed

[5] Is CO (second) dial tone heard via defective trunk

Yes. Station connected to CO → Page 5

NOTE 4
The check for CO dial tone is made by connecting dial hand test set to CO trunk cable pair and momentarily grounding tip.

No

[6] Is CO dial tone heard when checked from CO cable terminal via dial hand test set [NOTE 4]

No. Trouble tests toward CO → [7] Clear cable or CO equipment trouble via local procedures

Yes. Trouble is associated with trunk equipment unit

[8] Did MC (marker connect) relay operate and release (on seizure)

No → [9] Check operate path of MC relay [FIG. 2]

Yes → Page 3

INDICATION OF CAMP-ON UNIT	
ATND TRUNK 2	
ATND TRUNK 1	
ATND TRUNK 0	
CO TRUNK OR RINGDOWN TIE TRK	9
POS CKT AND TRK PTCH	
CO TRUNK OR RINGDOWN TIE TRK	8
CO TRUNK	7
CO TRUNK	6
CO TRUNK	5
CO TRUNK OR RINGDOWN TIE TRK	4
POS CKT AND TRK PATCH	
CO TRUNK OR RINGDOWN TIE TRK	3
CO TRUNK	2
CO TRUNK	1
CO TRUNK	0

SLIDE 5

FIG. 1

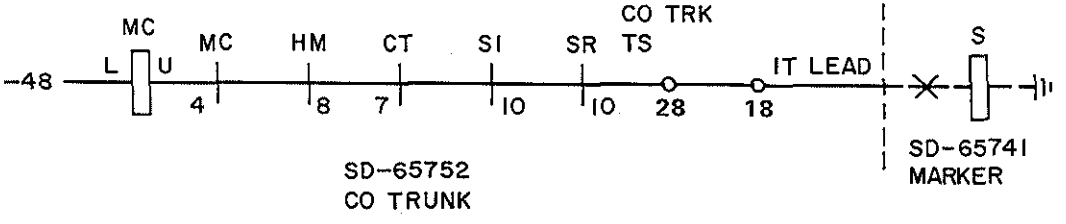

FIG. 2

Issue 1	May 1975
551-100-101	TAP
Page 2 of 5	152

CLEAR STATION CAN'T CALL OUT ON CO TRUNK TROUBLE (SD-65752)

[10] Did CO (0/9) trunk hold magnet [TABLE A] operate and lock

No → [11] Check lock and operate, path of CO THM [FIG. 3]

Yes ↓

[12] In slide 5, did HM (hold magnet-slave) relay operate and lock

No → [13] Check lock and operate path(s) of HM relay [FIG. 4]

Yes. CO trunk connected to switching network

Page 4

TABLE A			
CO TRK	THM LOC		
	SL	SW	VERT
0	4	0	0
1			1
2			2
3			3
4			4
5		8	5
6			6
7			7
8			8
9			9

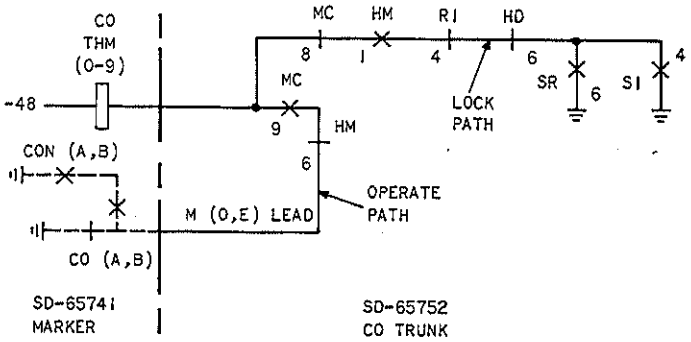

FIG. 3

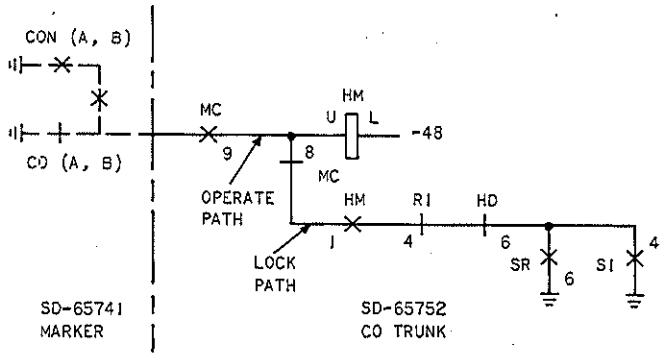

FIG. 4

CLEAR STATION CAN'T CALL OUT ON CO TRUNK TROUBLE (SD-65752)

[14] Did S (supervisory) relay operate

No → [15] Check operate path of S relay [FIG. 5]

Yes ↓

[16] Did S1 (supervisory auxiliary) relay operate

No → [17] Check operate path of S1 relay [FIG. 6]

Yes ↓

[18] Did H relay operate and release [NOTE 5]

No → [19] Check operate path of H relay [FIG. 7]

Yes ↓

[20] Did CT (cut through) relay operate and lock

No → [21] Check lock and operate path(s) of CT relay [FIG. 8]

Yes. Station connected to CO → Page 5

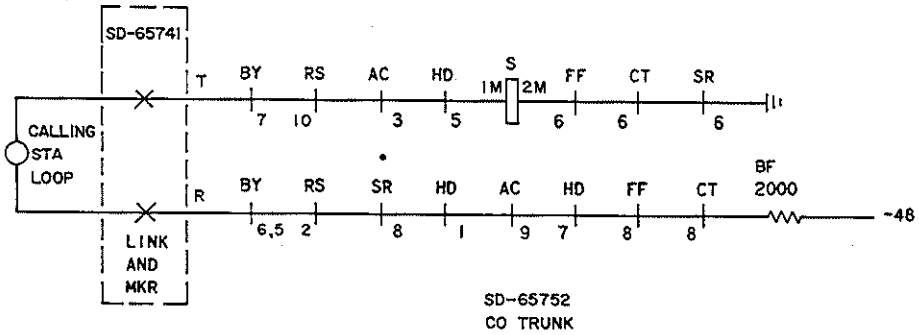

FIG. 5

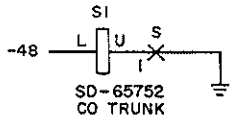

FIG. 6

NOTE 5
Armature movement of H relay is difficult to observe. IF CT relay (Step 20) is operated, it can be assumed H relay operated

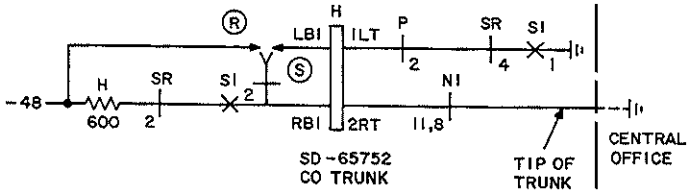

FIG. 7

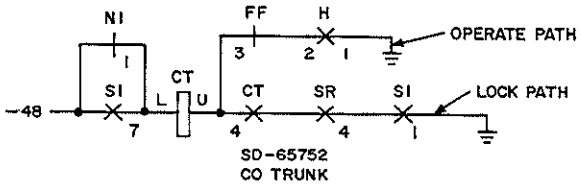

FIG. 8

CLEAR STATION CAN'T CALL OUT ON CO TRUNK TROUBLE (SD-65752)

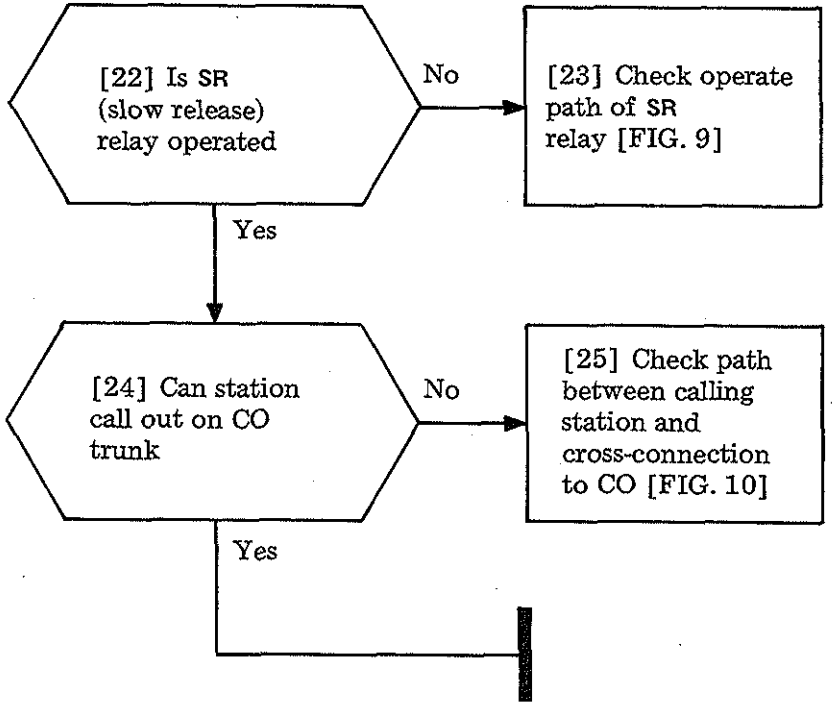

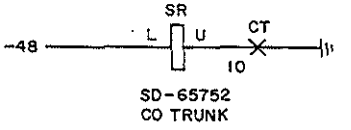

FIG. 9

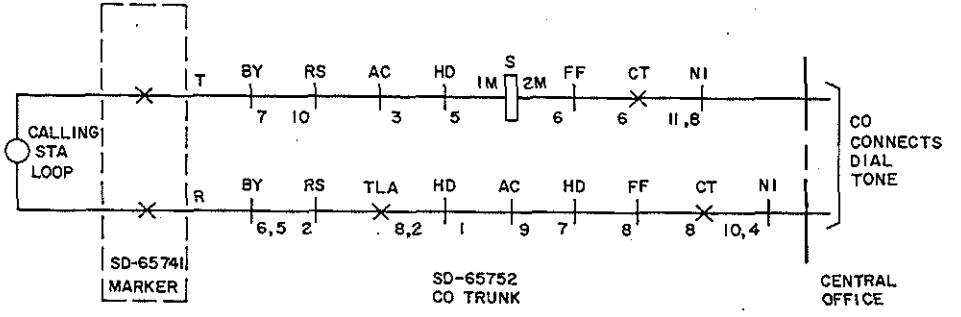

FIG. 10

CLEAR STATION CAN'T CALL OUT ON CO TRUNK TROUBLE (SD-65752)

SUMMARY

Locate the J58829AD-2 plug-in dial conference unit (top of slide 2). Temporarily connect a 500D-type telephone (for testing) to test station 39 terminals. Get ready to watch each trunk hold magnet (THM) operate as conferees are added. This procedure assumes the six verticals of crossbar switch 2 used are 0-5 (associated with conference ports 80-85). Using the temporary 500D set for controller or first conferee:

- Dial the conference code (assumed to be 80)
- Watch vertical 0 operate to connect station 39, and vertical 1 operate to provide both PBX dial tone and connect second conferee
- Dial (idle) station number of second conferee
- After answer, flash test station switchhook for PBX dial tone
- Add remaining four conferees via the same method (six total)

Procede until a failure occurs (assumed — no marker or register trouble). This procedure assumes circuit is equipped for private consultation.

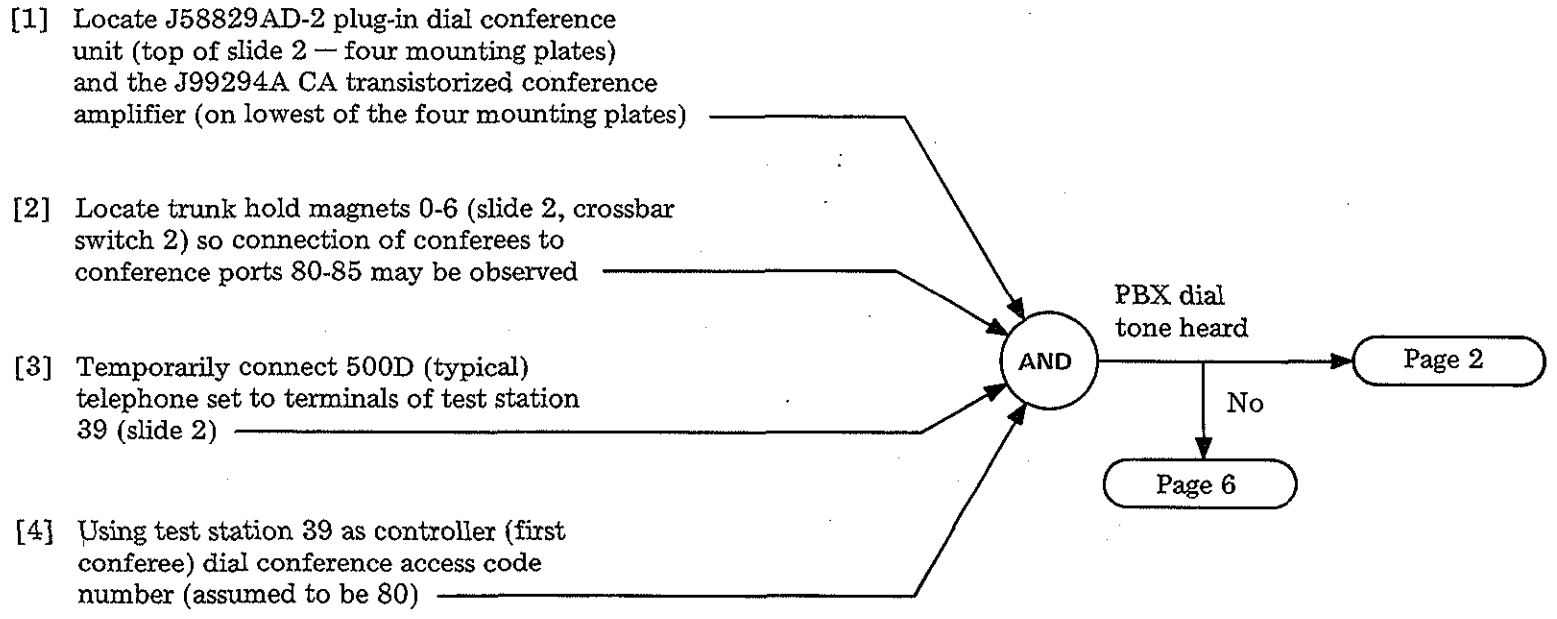

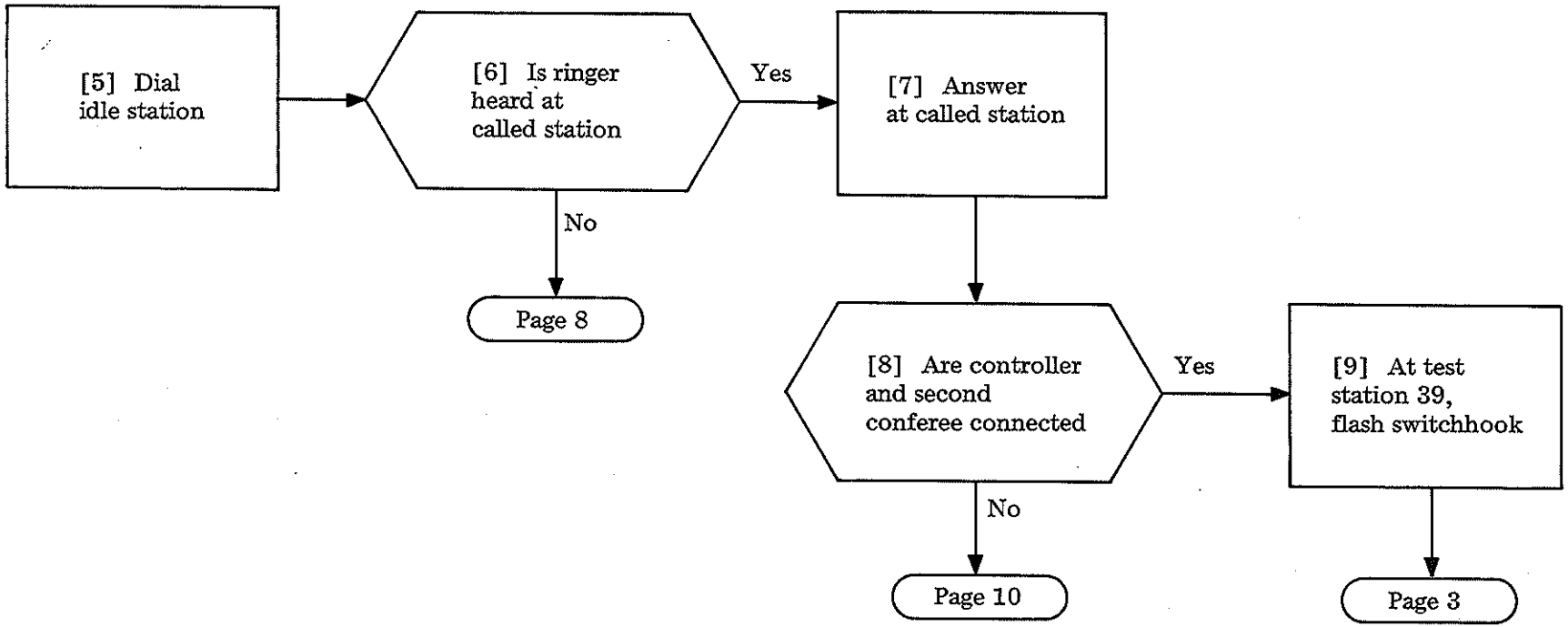
[5] Dial idle station
[6] Is ringer heard at called station
Yes
No
Page 8
[7] Answer at called station
[8] Are controller and second conferee connected
Yes
No
Page 10
[9] At test station 39, flash switchhook
Page 3

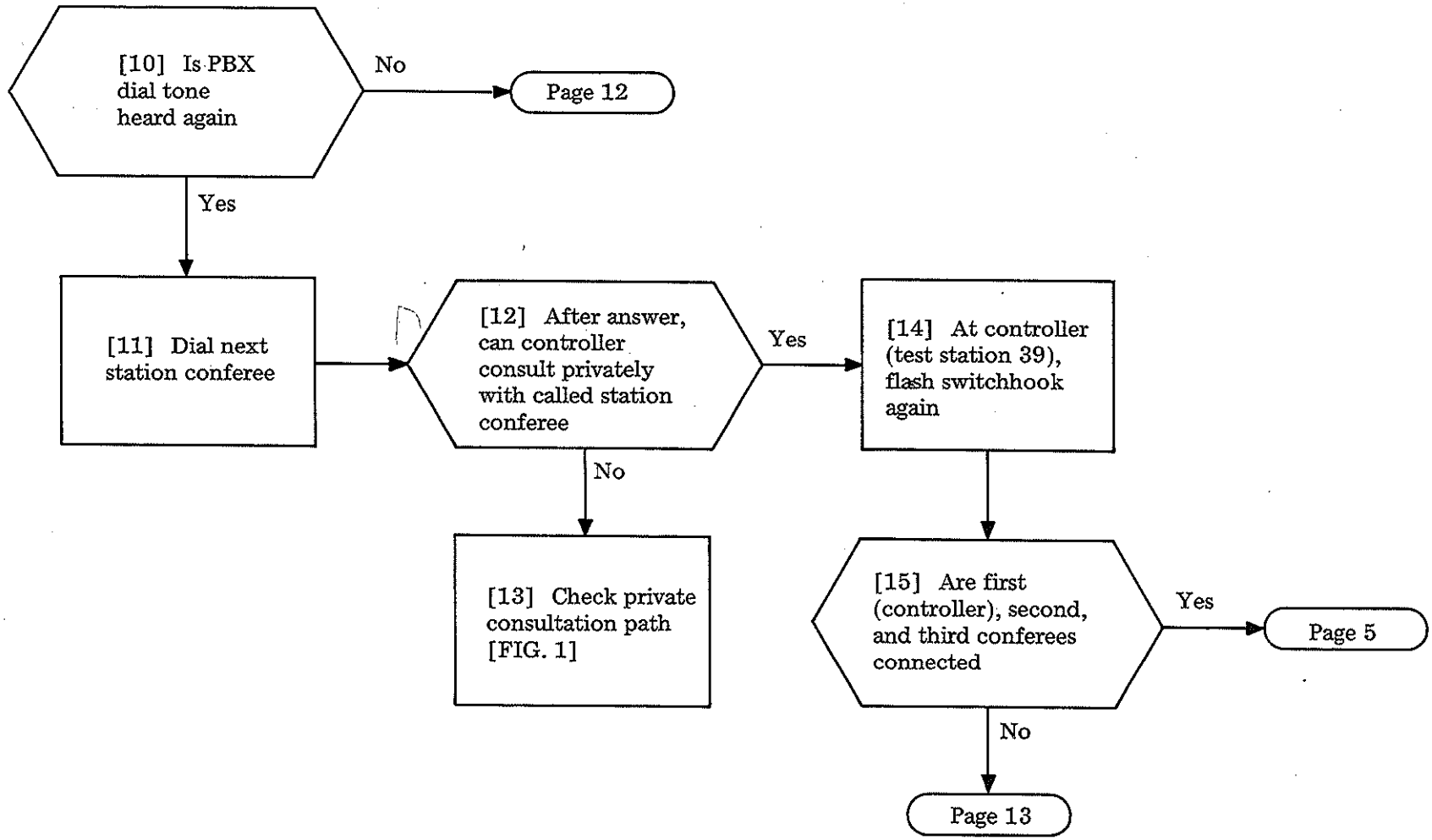

CLEAR STATION-CONTROLLED DIAL CONFERENCE TROUBLE (SD-66902)

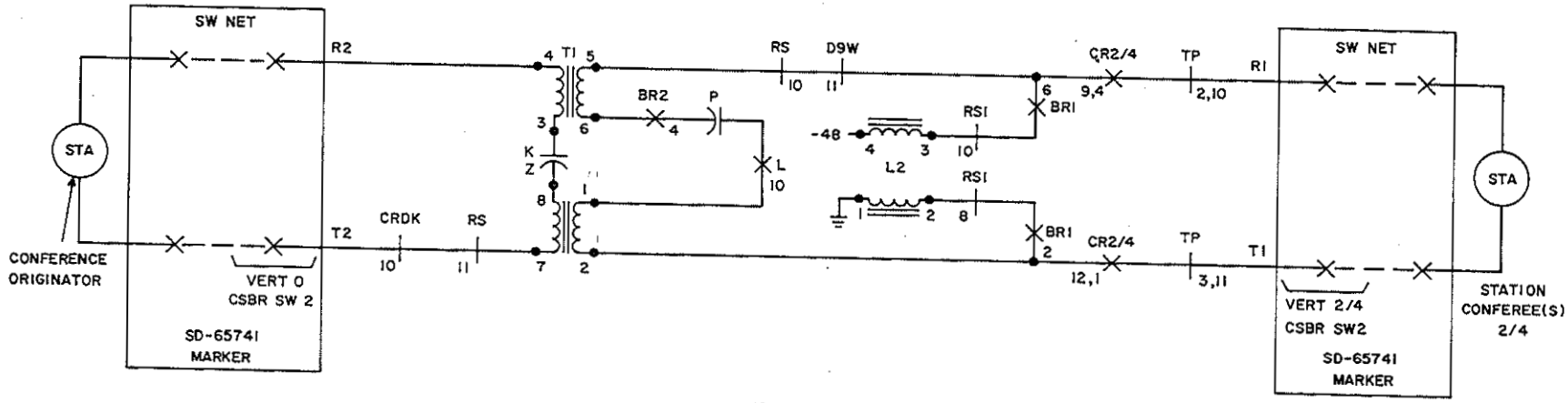

SD-66902
DIAL CONF TRK

FIG. 1

CLEAR STATION-CONTROLLED DIAL CONFERENCE TROUBLE (SD-66902)

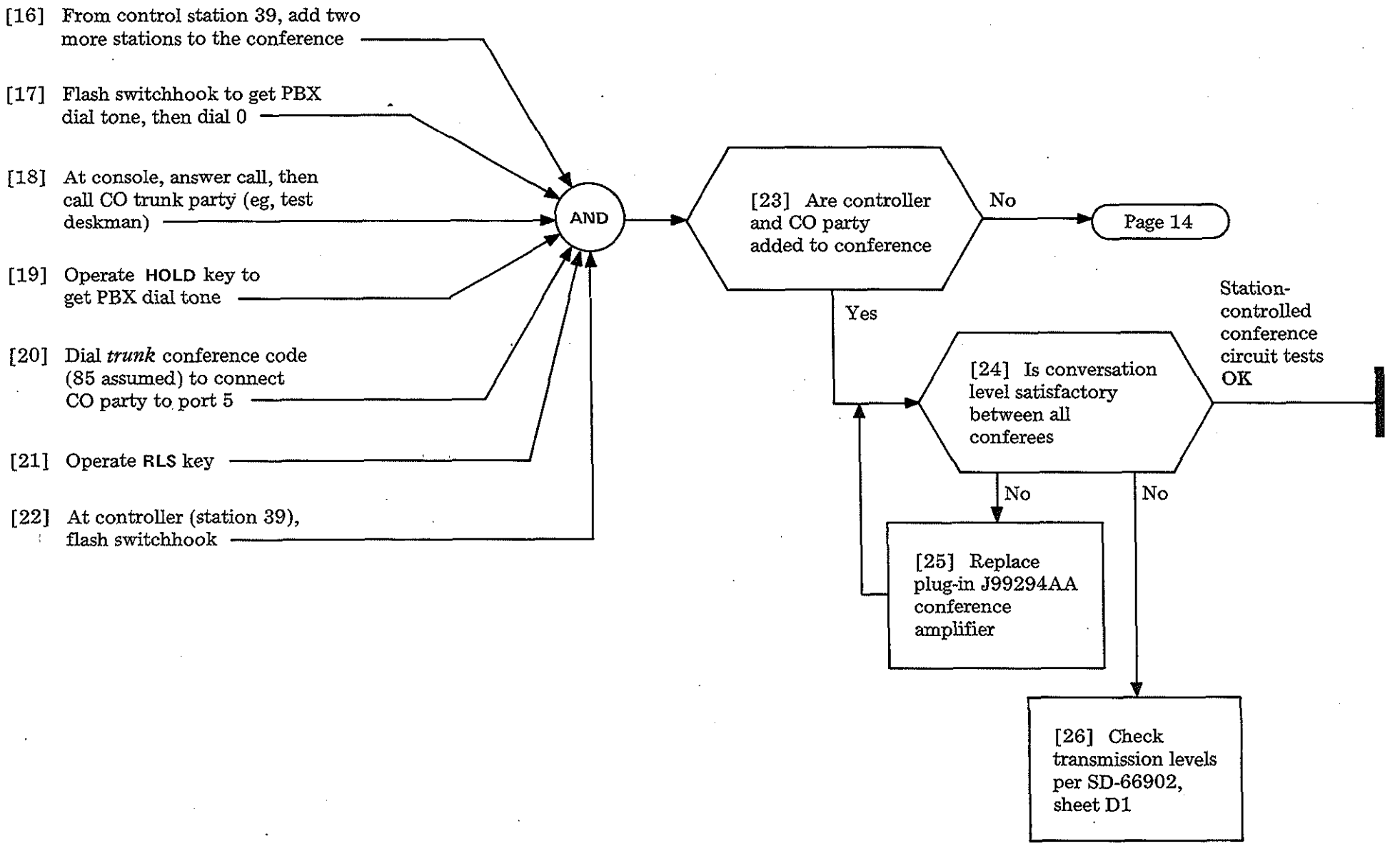

CLEAR STATION-CONTROLLED DIAL CONFERENCE TROUBLE (SD-66902)

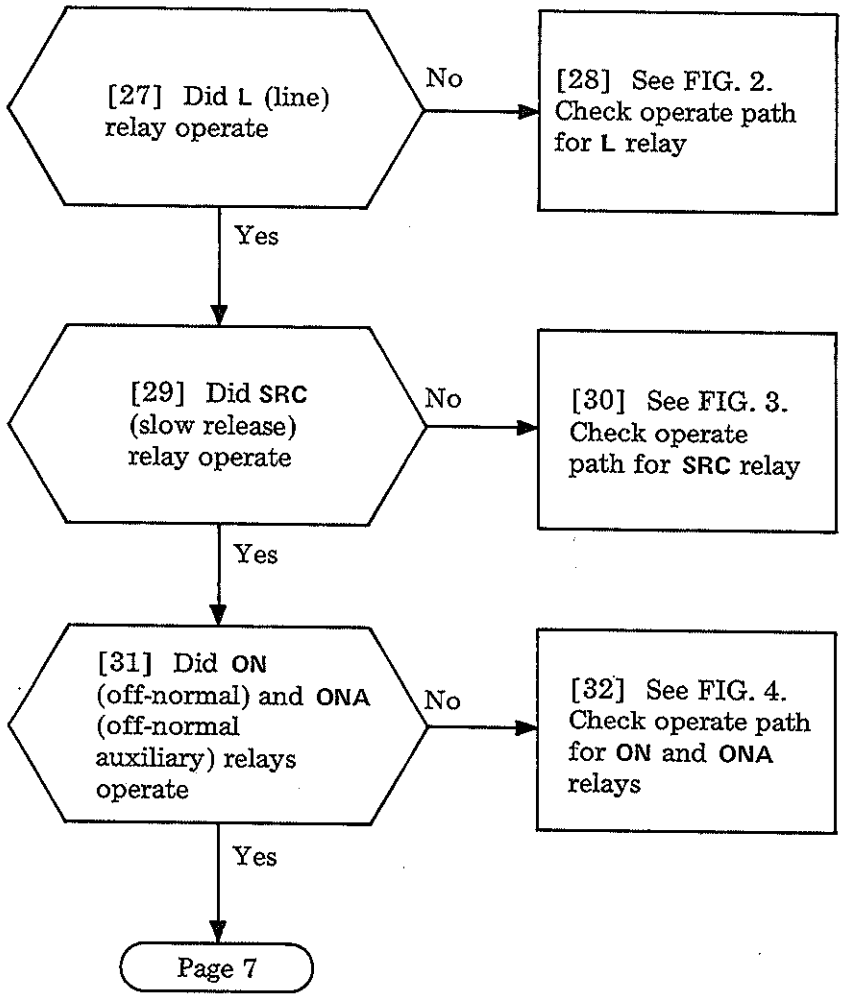

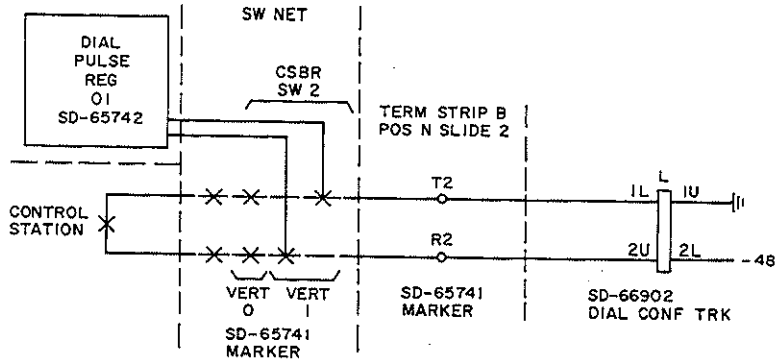

FIG. 2

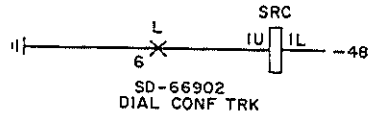

FIG. 3

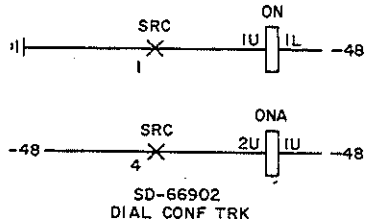

FIG. 4

CLEAR STATION-CONTROLLED DIAL CONFERENCE TROUBLE (SD-66902)

[33] Did **CRDK** (connect register — down check) relay operate and release

No → [34] See FIG. 5. Check operate path for **CRDK** relay

Yes ↓

[35] Did **CR1** (connect register) relay operate

No → [36] See FIG. 6. Check operate path for **CR1** relay

Yes ↓

[37] Did **RRL** (register release) relay operate

No → [38] See FIG. 7. Check operate path for **RRL** relay

Yes ↓

[39] See FIG. 8. Check PBX dial tone path

PBX dial tone heard

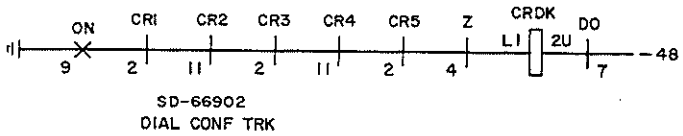

FIG. 5

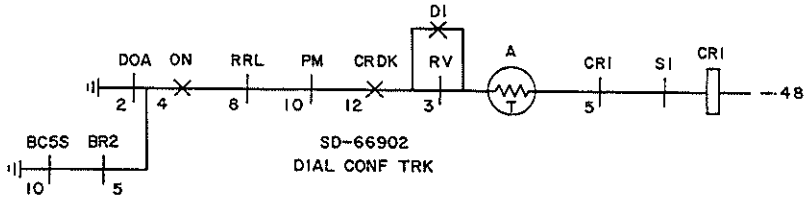

FIG. 6

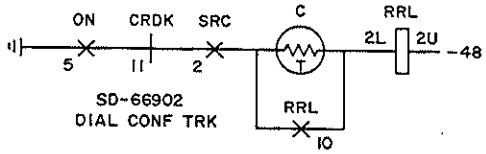

FIG. 7

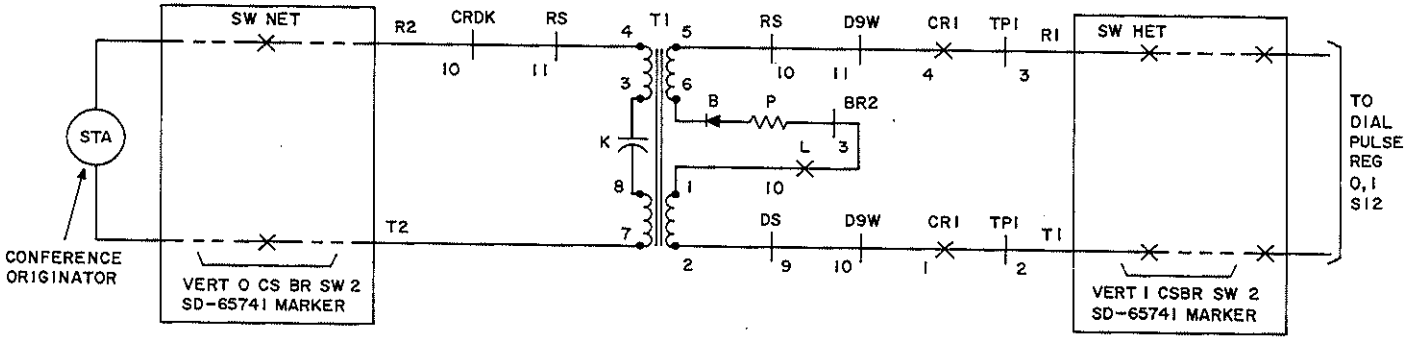

FIG. 8

CLEAR STATION-CONTROLLED DIAL CONFERENCE TROUBLE (SD-66902)

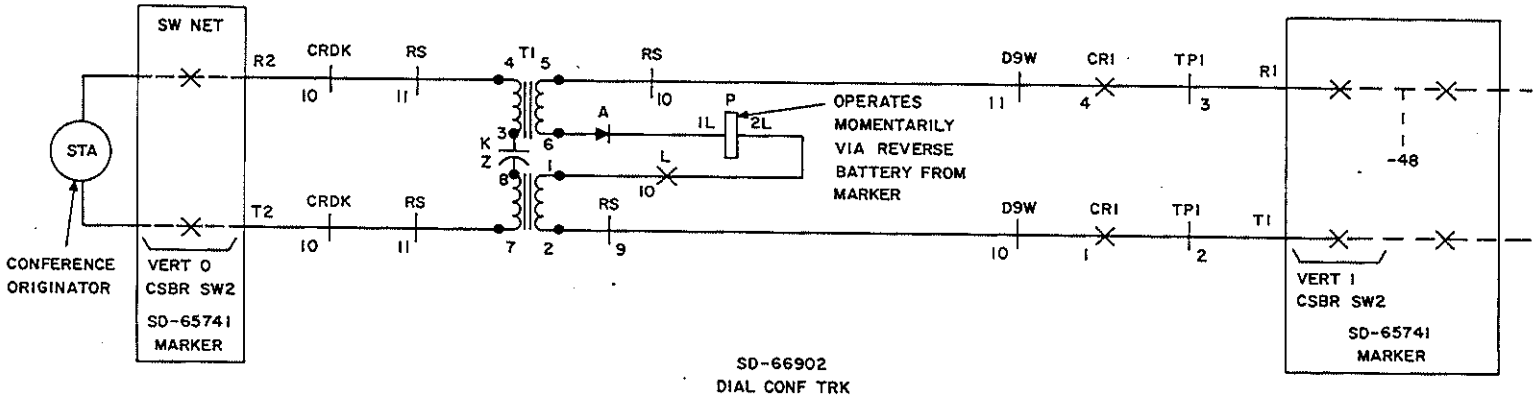

FIG. 9

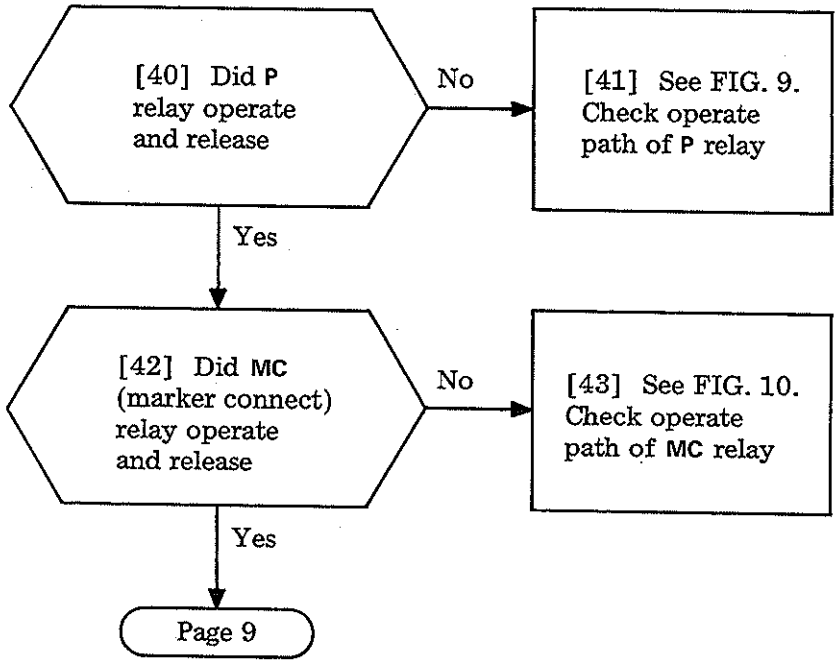

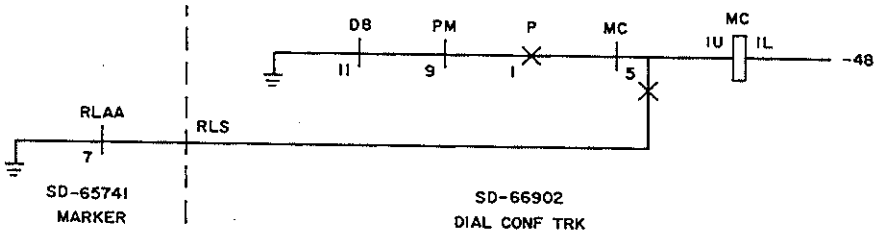

FIG. 10

CLEAR STATION-CONTROLLED DIAL CONFERENCE TROUBLE (SD-66902)

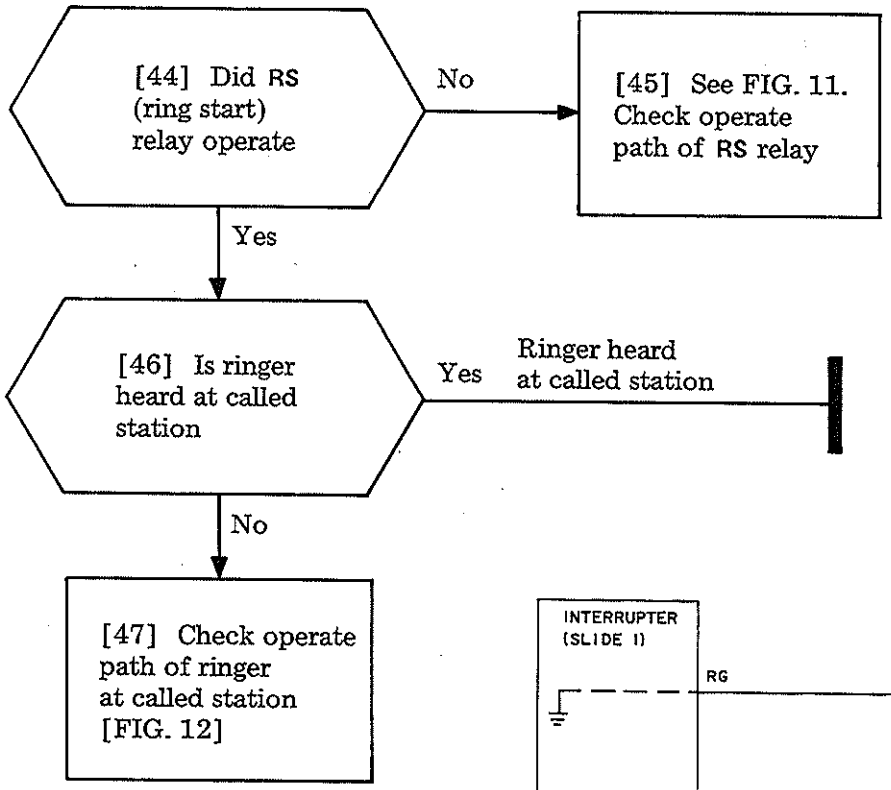
[44] Did RS (ring start) relay operate
No
[45] See FIG. 11. Check operate path of RS relay
Yes
[46] Is ringer heard at called station
Yes
Ringer heard at called station
No
[47] Check operate path of ringer at called station [FIG. 12]

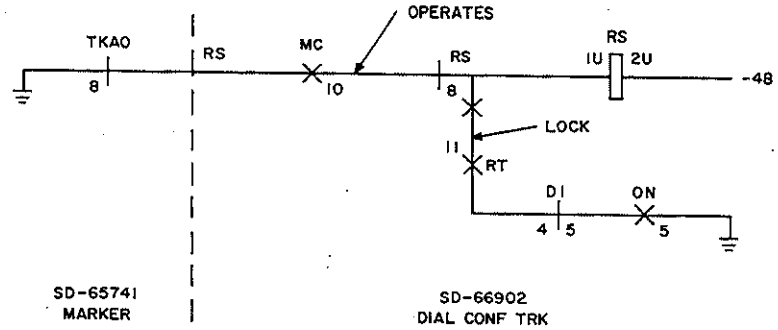
OPERATES
TKAO
RS
MC
RS
RS
1U
2U
-48
8
10
8
LOCK
11
RT
DI
ON
4
5
5
SD-65741 MARKER
SD-66902 DIAL CONF TRK

FIG. 11

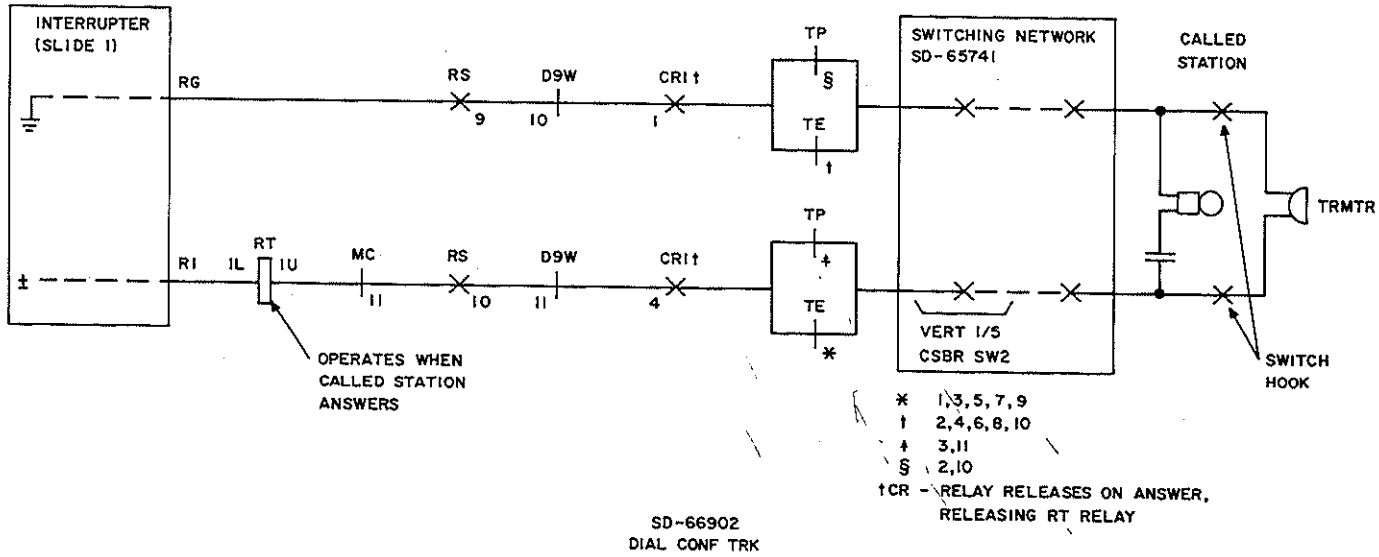
INTERRUPTER (SLIDE 1)
RG
RI
1L
RT
1U
MC
RS
D9W
CRI†
TP
TE
SWITCHING NETWORK SD-65741
CALLED STATION
TRMTR
VERT 1/5
CSBR SW2
SWITCH HOOK
OPERATES WHEN CALLED STATION ANSWERS
* 1,3,5,7,9
† 2,4,6,8,10
‡ 3,11
§ 2,10
†CR - RELAY RELEASES ON ANSWER, RELEASING RT RELAY
SD-66902 DIAL CONF TRK

FIG. 12

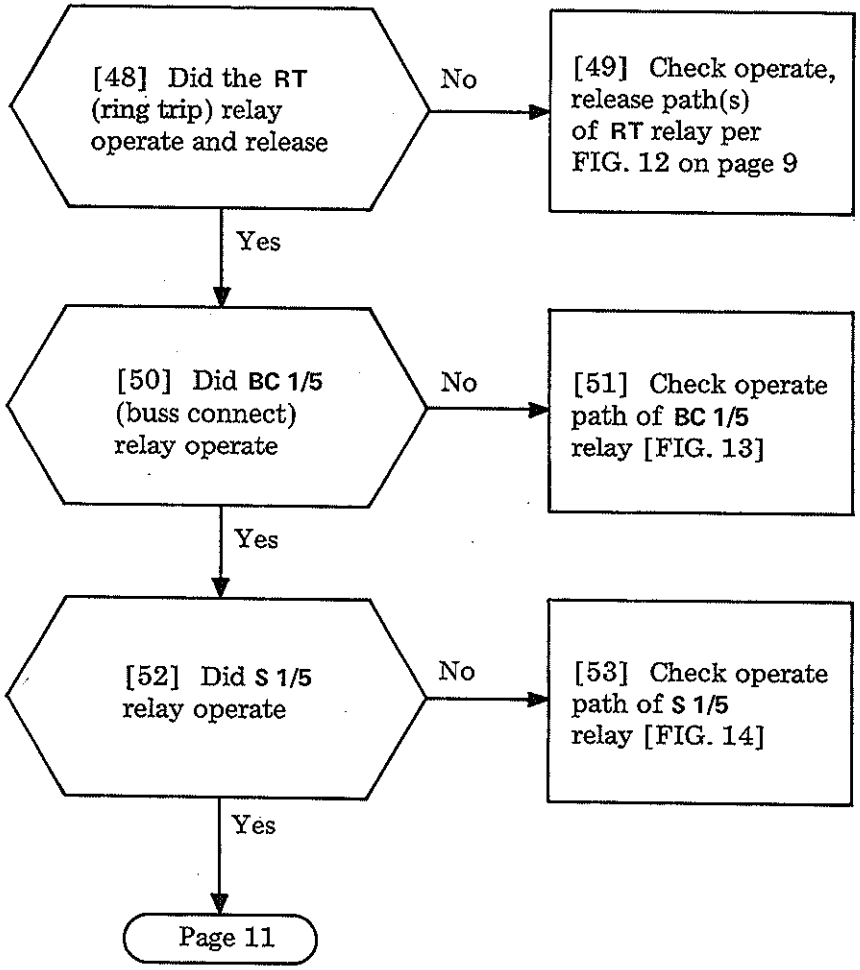

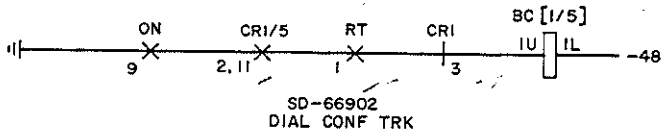

FIG. 13

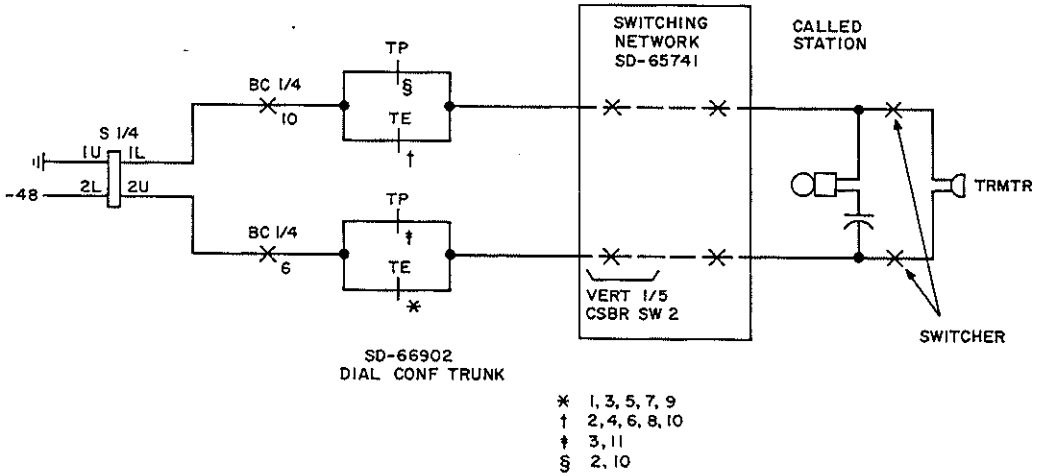

FIG. 14

CLEAR STATION-CONTROLLED DIAL CONFERENCE TROUBLE (SD-66902)

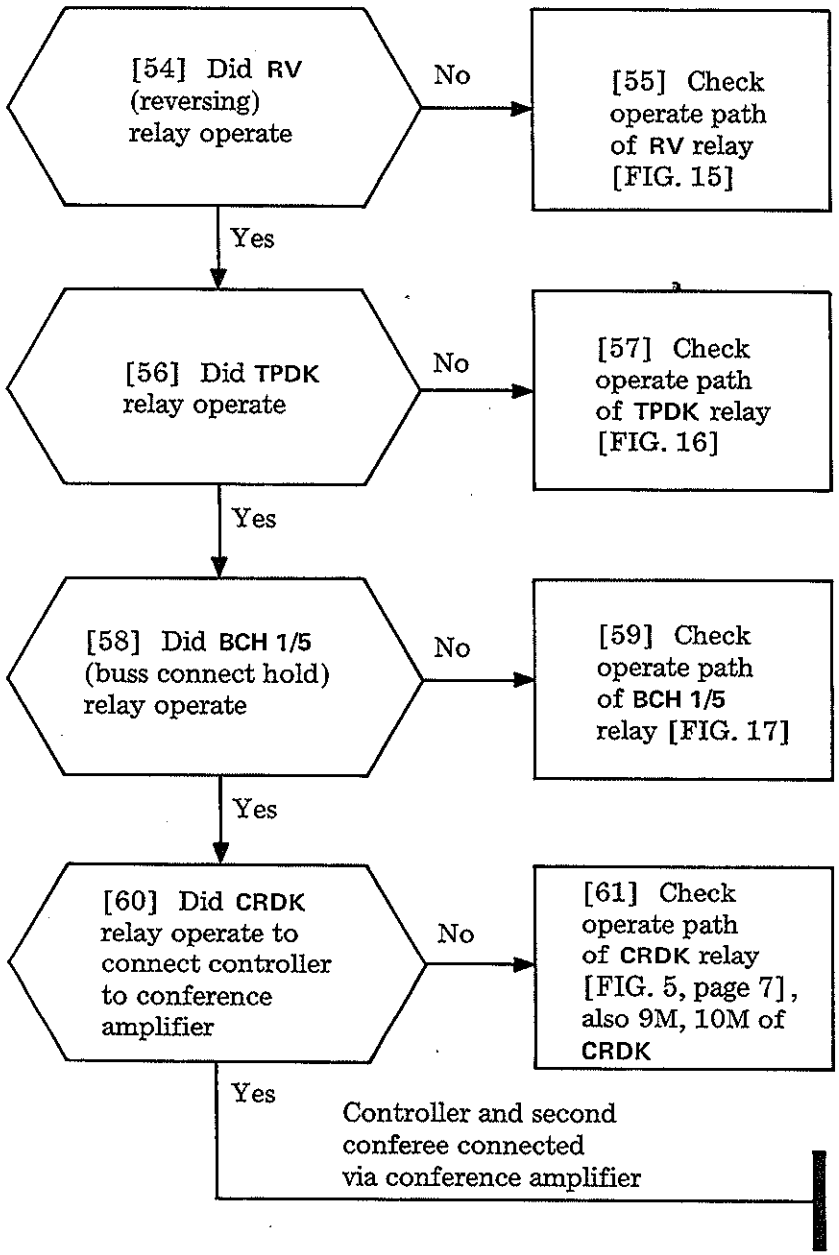

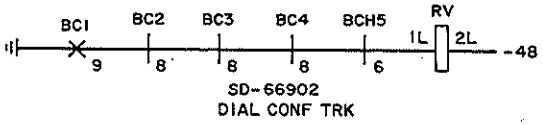

FIG. 15

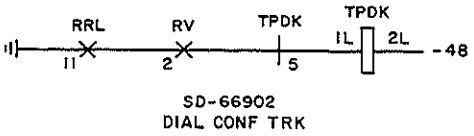

FIG. 16

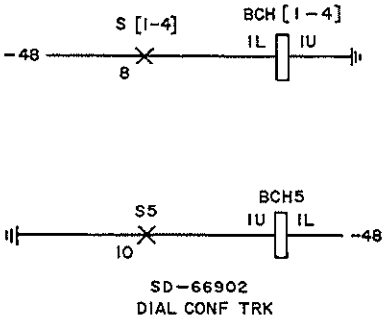

FIG. 17

CLEAR STATION-CONTROLLED DIAL CONFERENCE TROUBLE (SD-66902)

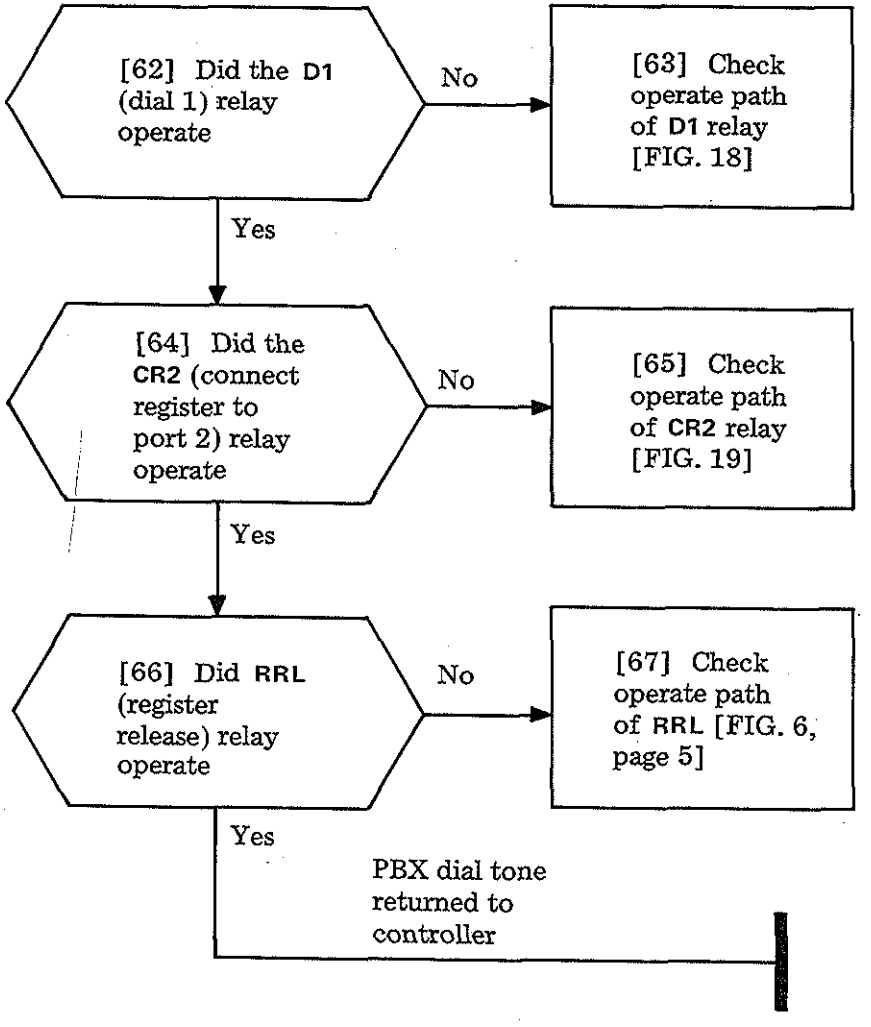

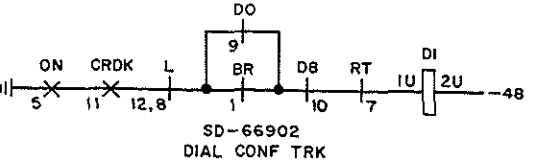

FIG. 18

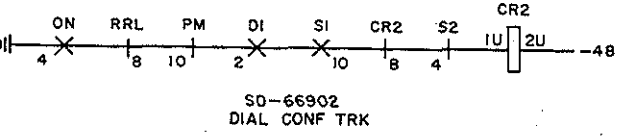

FIG. 19

CLEAR STATION-CONTROLLED DIAL CONFERENCE TROUBLE (SD-66902)

[68] Did CF (conference return) relay operate and release

No → [69] Check operate path of CF relay [FIG. 20]

Yes ↓

[70] Is BC2 (buss connect—port 2) relay operated

No → [71] Check operate path of BC2 relay [FIG. 21]

Yes ↓

[72] Did BCH2 relay operate

No → [73] Check operate path of BCH2 relay [FIG. 17, page 11]

Yes → First (controller), second, and third conferees connected via conference amplifier

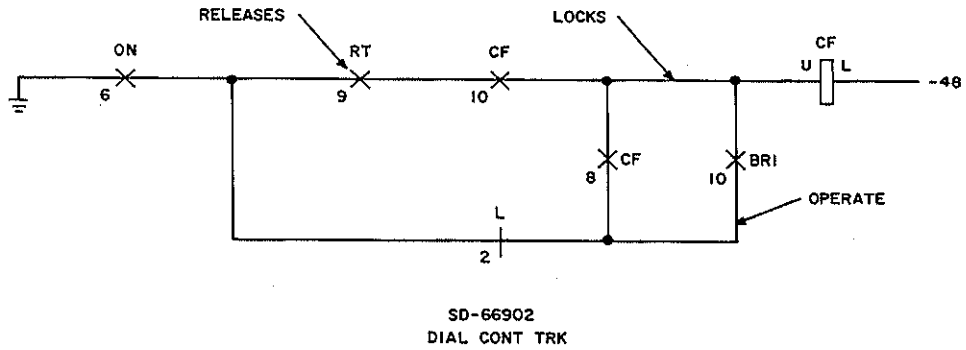

FIG. 20

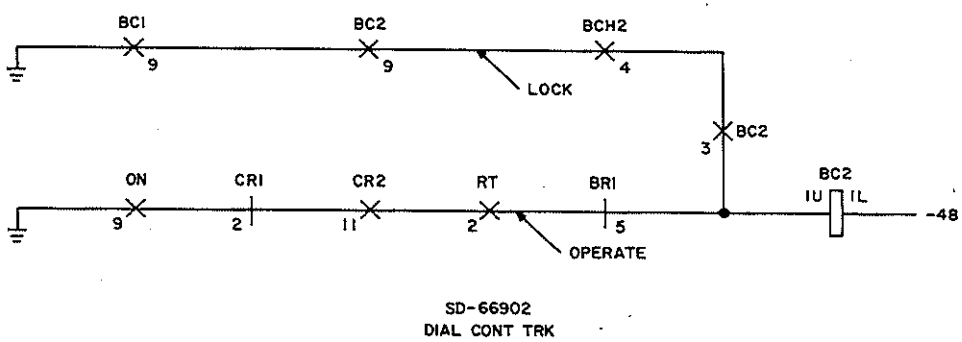

FIG. 21

CLEAR STATION-CONTROLLED DIAL CONFERENCE TROUBLE (SD-66902)

[74] Did **D1** (dial 1) relay operate

No → [75] Check operate path of **D1** relay [FIG. 22]

Yes ↓

[76] Did **BC5** relay operate

No → [77] Check operate path of **BC5** relay [FIG. 23]

Yes ↓

[78] Did **S5** relay operate

No → [79] Check operate path of **S5** relay [FIG. 24]

Yes ↓

Page 15

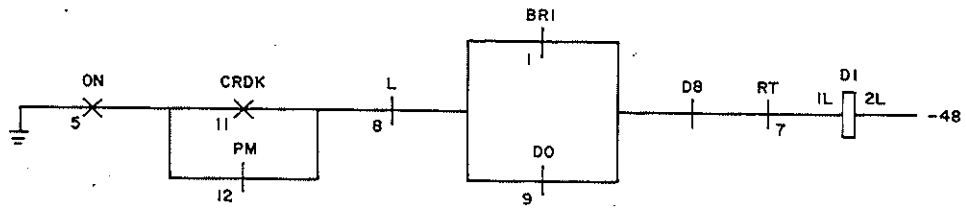

SD-66902
DIAL CONT TRK

FIG. 22

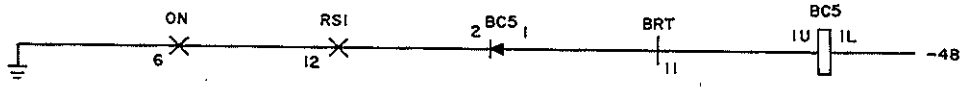

SD-66902
DIAL CONT TRK

FIG. 23

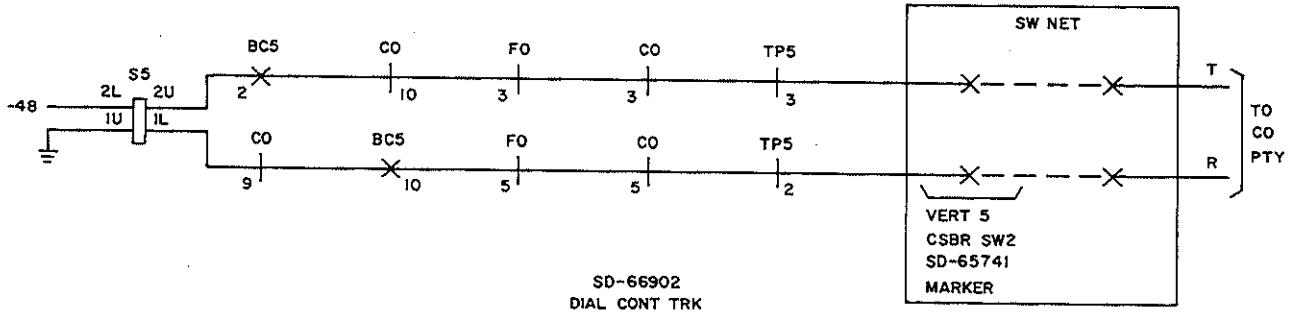

SD-66902
DIAL CONT TRK

FIG. 24

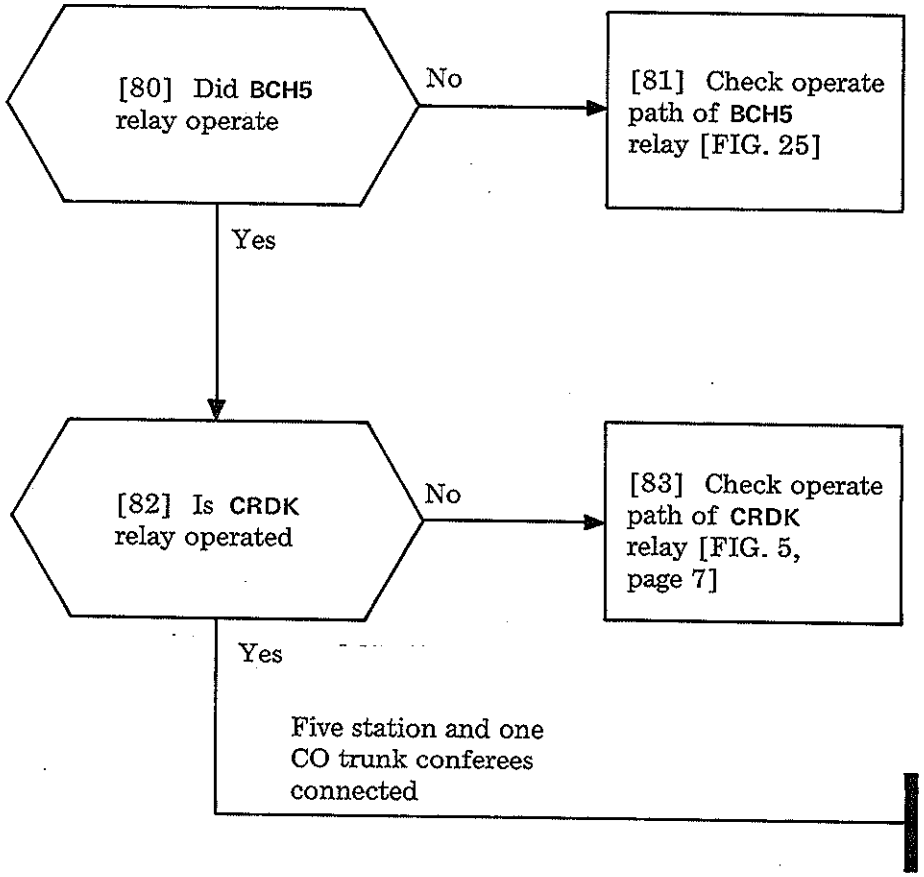

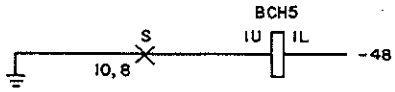

SD-66902
DIAL CONF TRK

FIG. 25

CLEAR STATION-CONTROLLED DIAL CONFERENCE TROUBLE (SD-66902)

SUMMARY

Go to false busy station set (that seemed idle, but caller got busy tone). See FIG. 1 for example. Make sure handset is on-hook. If key telephone set(s) is involved, verify that line is not held. Go off-hook and check for possible second station [FIG. 1, station 50] that may be associated with the trouble; perhaps caller waiting off-hook, or unattended. If unattended, background noise may help to identify the location of this set. Since the 756A PBX switching network operates via calling party hold, locate originating set or wiring that is holding operated the line hold magnet (LHM) of the station reported as false busy, using the figure(s) or other reference given in this procedure.

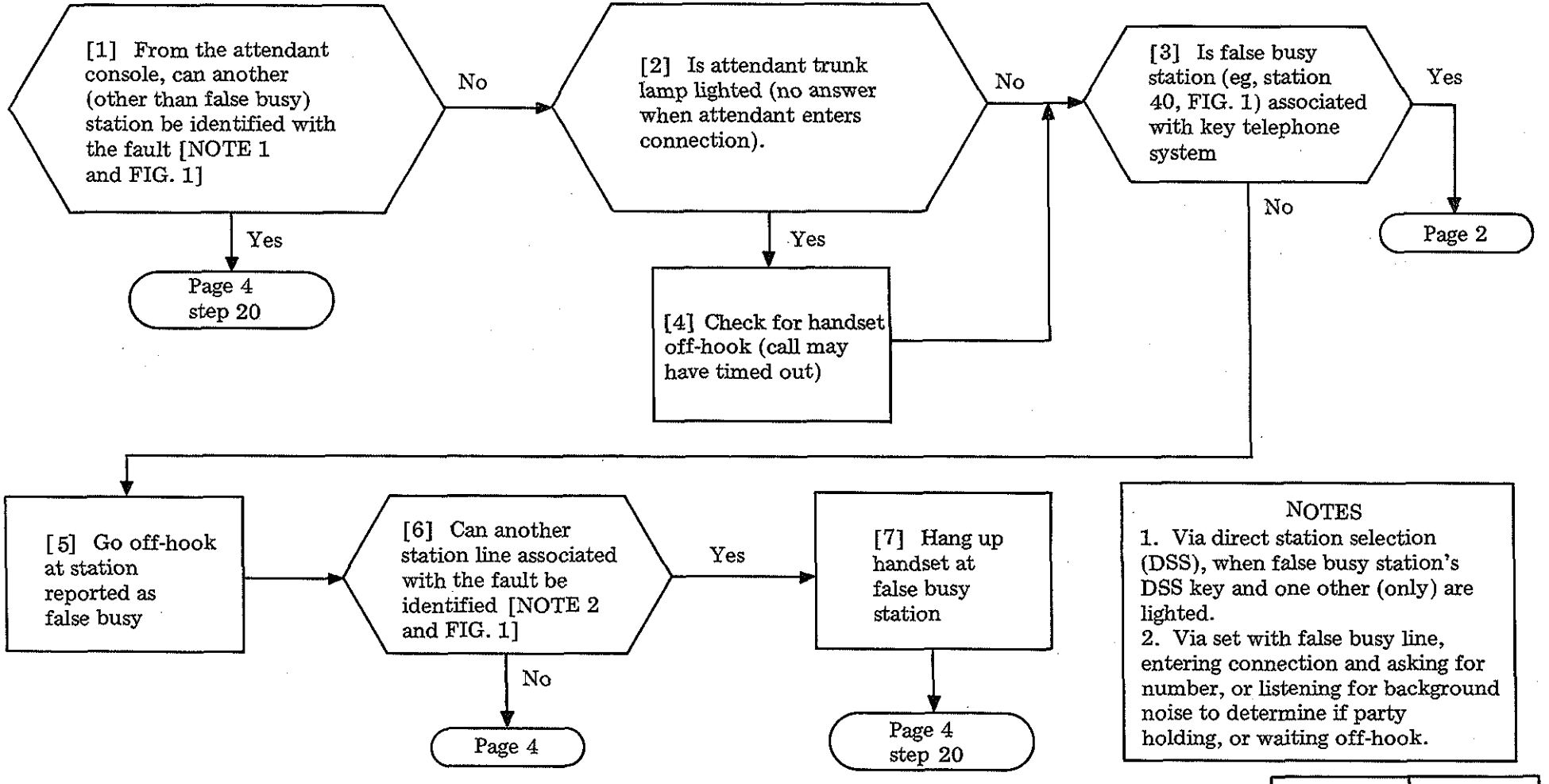

NOTES

1. Via direct station selection (DSS), when false busy station's DSS key and one other (only) are lighted.
2. Via set with false busy line, entering connection and asking for number, or listening for background noise to determine if party holding, or waiting off-hook.

CLEAR STATION FALSE BUSY TROUBLE

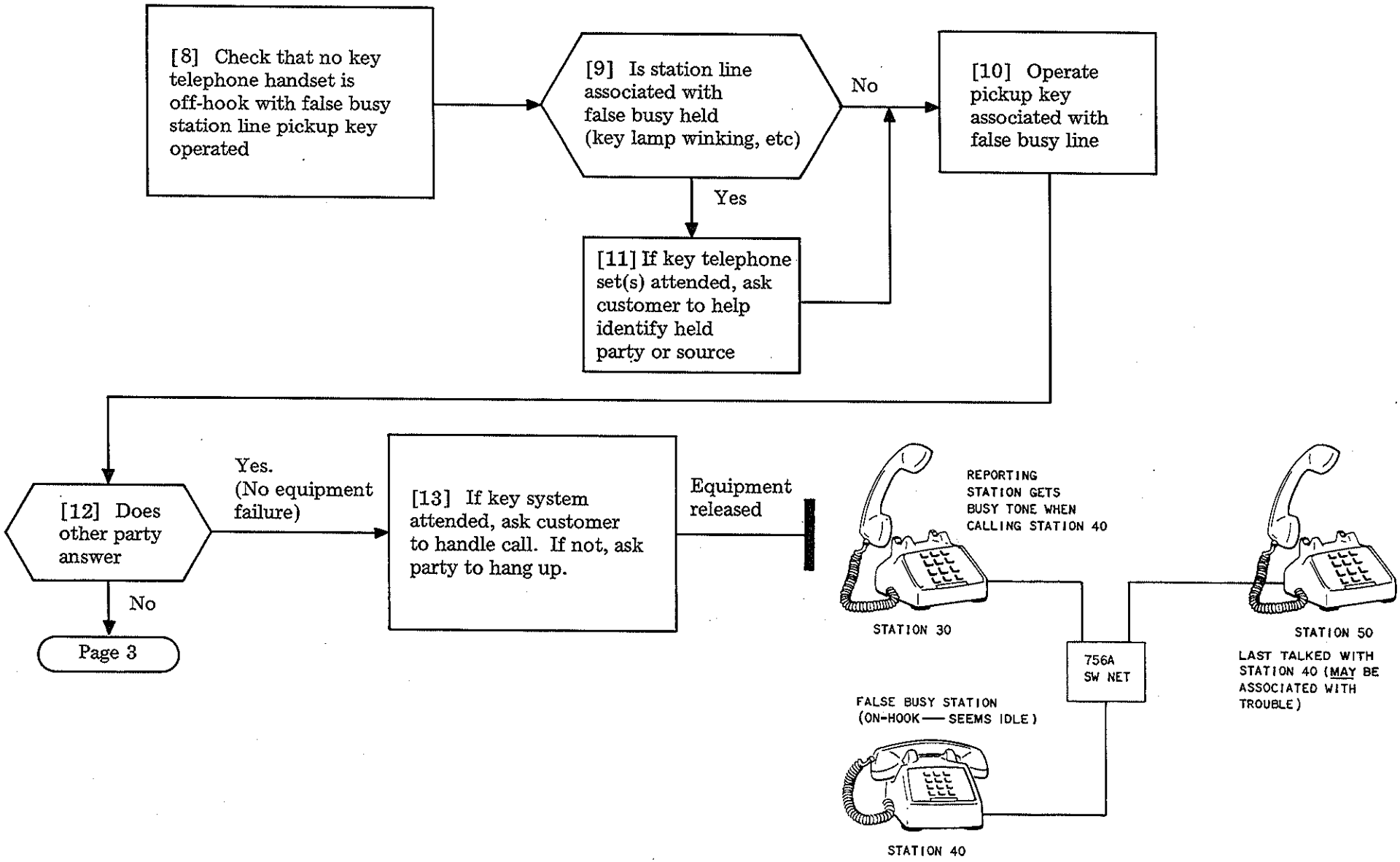

FIG. 1

CLEAR STATION FALSE BUSY TROUBLE

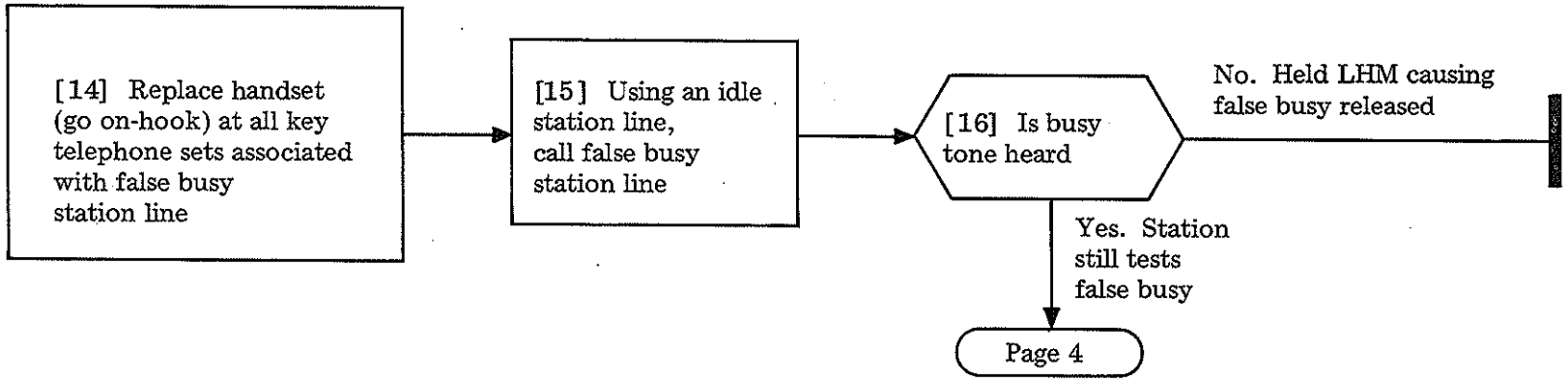

CLEAR STATION FALSE BUSY TROUBLE

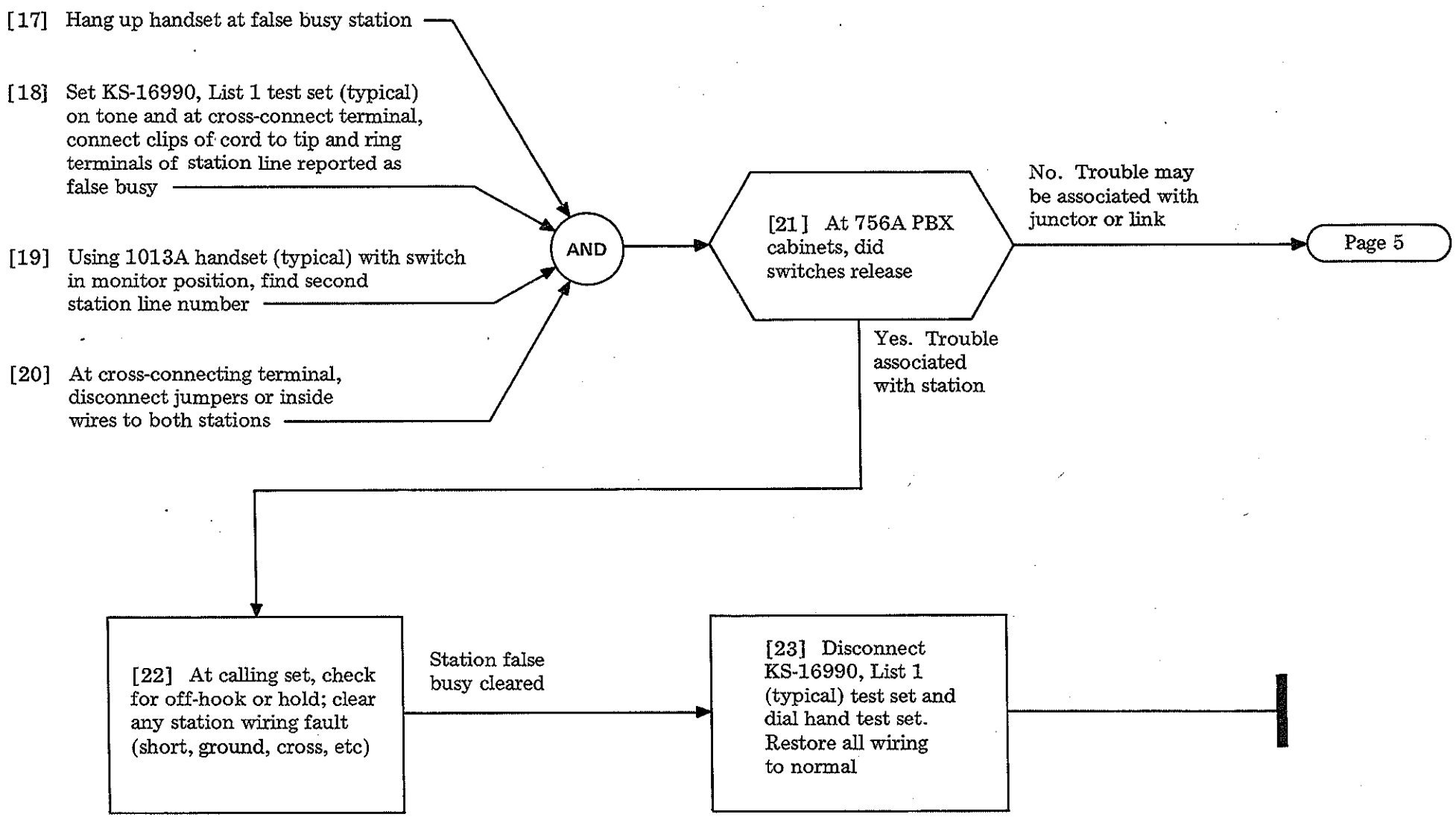

Issue 1	May 1975
551-100-101	TAP
PAGE 4 of 6	154

CLEAR STATION FALSE BUSY TROUBLE

[24] Check for tone at 7F (tip) and 9F (ring) of each TP (trip) relay until junctor used is located [TABLE A]

[25] Identify originating and terminating links (banjo wires) connected by junctor. [See TABLE A and NOTE 3]

[26] Release (manually) A relay of junctor

[27] Did A relay relay reoperate

No. Station false busy clear

Page 6

Yes

[28] Check originating (*then* terminating) link(s) through *all switches* for short (bent and touching banjo wires, bare wire clippings, etc).

TABLE A

JCTR	LOCATION				
	SLIDE	REL-MTG PLT	CSBR SWITCH	HOLD MAG VERTICAL	
				ORIG	TERM
0	3	T	1	0	1
1				2	3
2		U		4	5
3	4	Y	8	1	2
4				3	4
5	3	U	1	6	7

NOTE 3
For example, if hold magnets [TABLE A] operated crosspoints 0 and 2 at originating vertical, and 1 and 9 at terminating vertical, link 02 is connected by the junctor to link 19. TAD-163 shows the method of identifying crosspoints and links.

CLEAR STATION FALSE BUSY TROUBLE

TABLE B		
JCTR	REL LOC	
	SLIDE	MTG PLT
0	3	T
1		
2		U
3	4	Y
4		
5	3	U

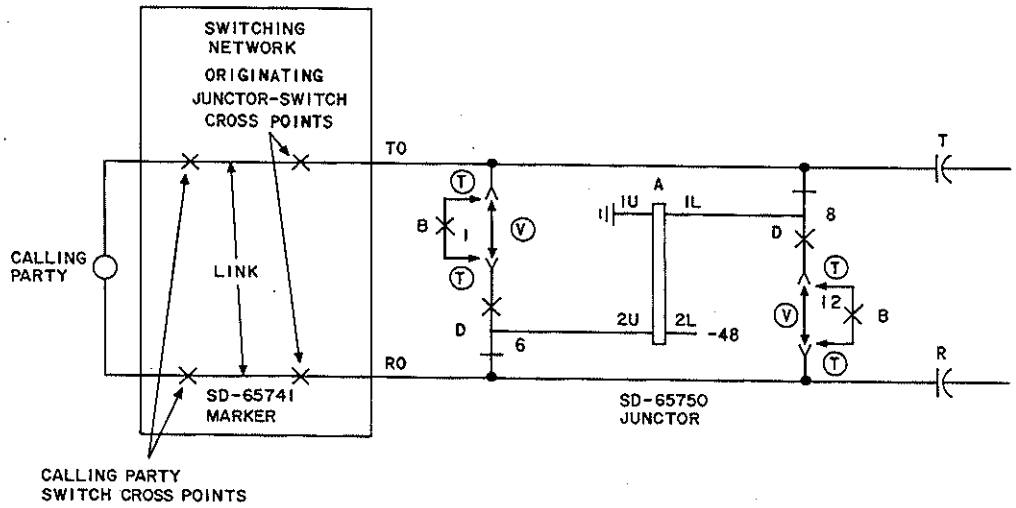

FIG. 2

[29] Verify that all junctors are provided with option T [NOTE 4, TABLE B, FIG. 1]

→

[30] Disconnect test set (tone) and 1013A (typical) handset. Restore all equipment and wiring to normal

All junctors wired for option T

NOTE 4
Junctors stamped prior to SD-65750, Issue 6B are furnished with option V as standard. Later issues are furnished with T option as standard to prevent reoperation of A relay when D relay releases

[1] At convenient station, place outgoing CO trunk call (dial 9) to the **LDN** of an idle incoming trunk

[2] Have attendant extend call to restricted station with reported trouble

AND

[3] Does **AU (0-9)** relay operate when station is dialed [NOTE]

Yes → Page 2

1 No → [4] Check operate path of **AU** ___ [FIG. 1]

2 No → [5] Check strapping for shorts or broken straps on **TS** [FIG. 2]

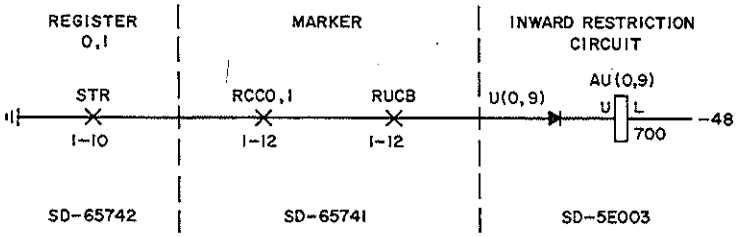

FIG. 1

NOTE
Relays for the inward restriction equipment are located in an external cabinet mounted near the PBX equipment

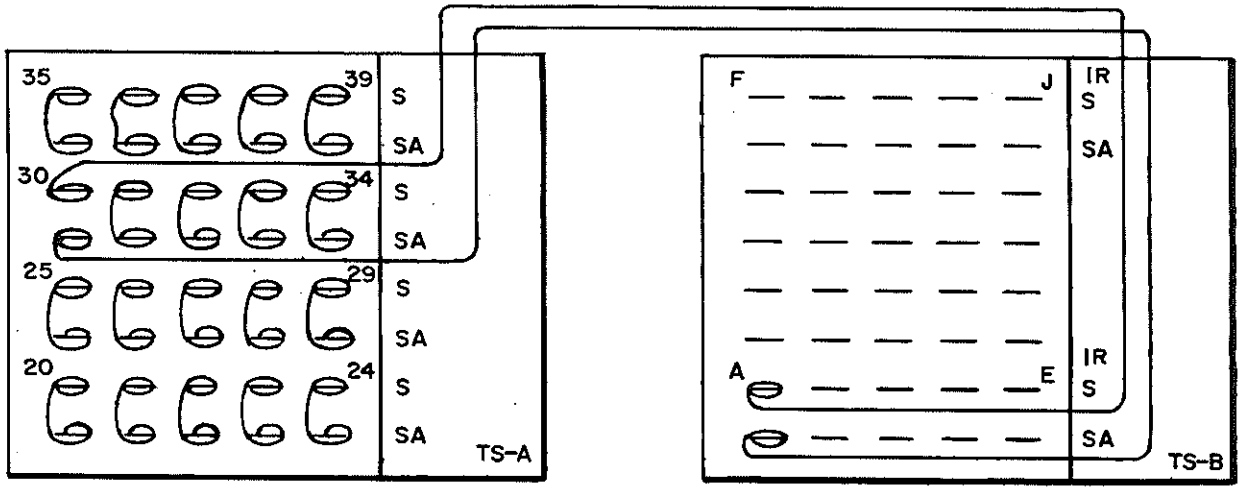

FIG. 2 – Example, STA 30 Inward Restricted

Issue 1	May 1975
551-100-101	TAP
PAGE 1 of 2	155

CLEAR STATION INWARD RESTRICTION TROUBLE

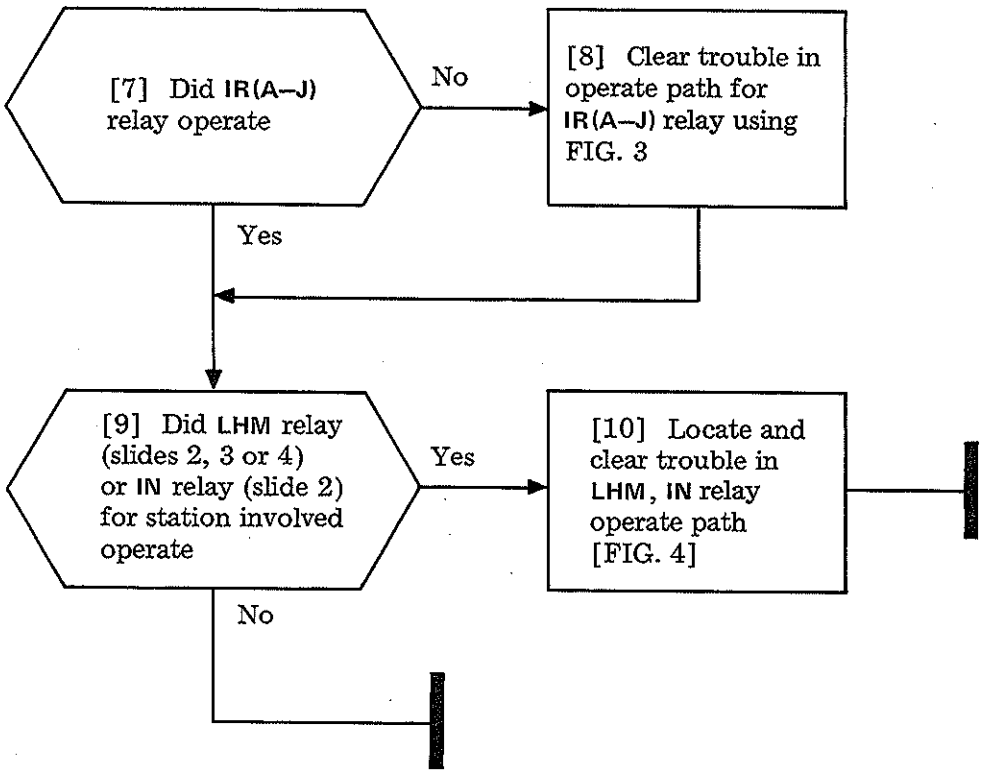

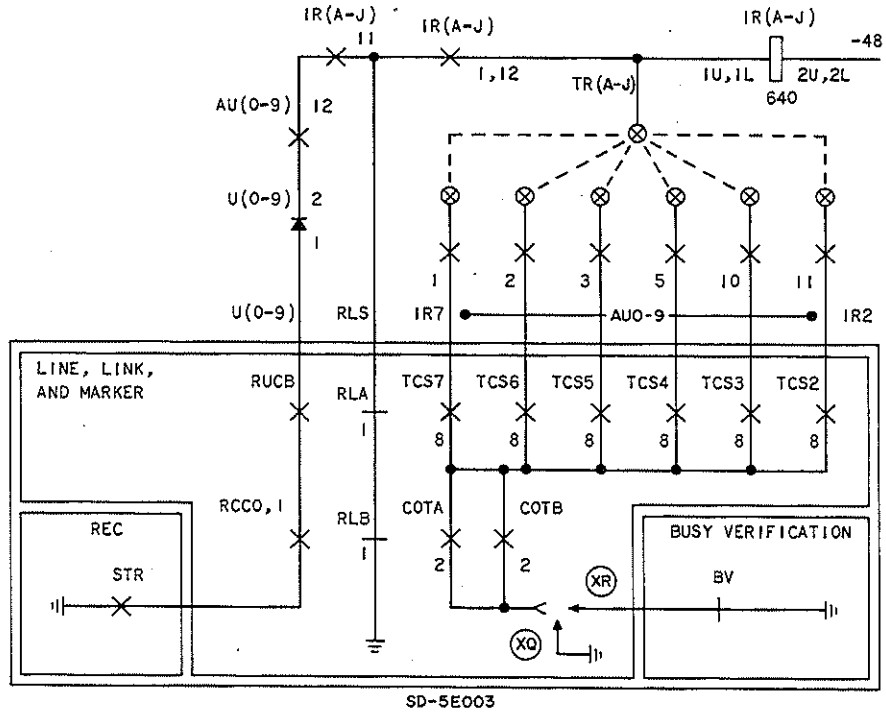

FIG. 3

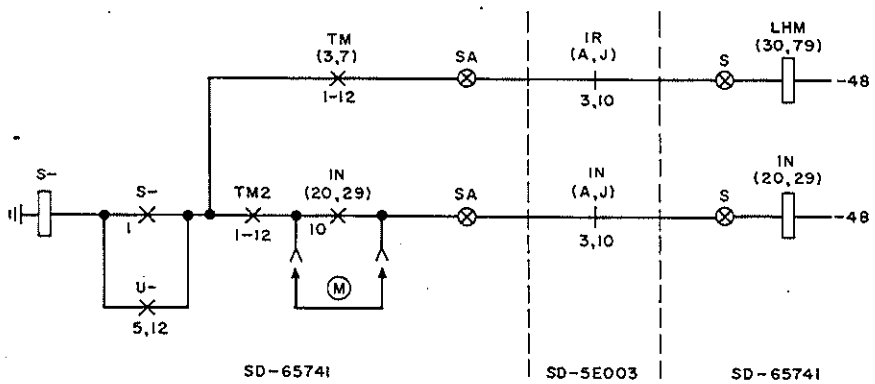

FIG. 4

Issue 1	May 1975
551-100-101	TAP
PAGE 2 of 2	155

CLEAR STATION INWARD RESTRICTION TROUBLE

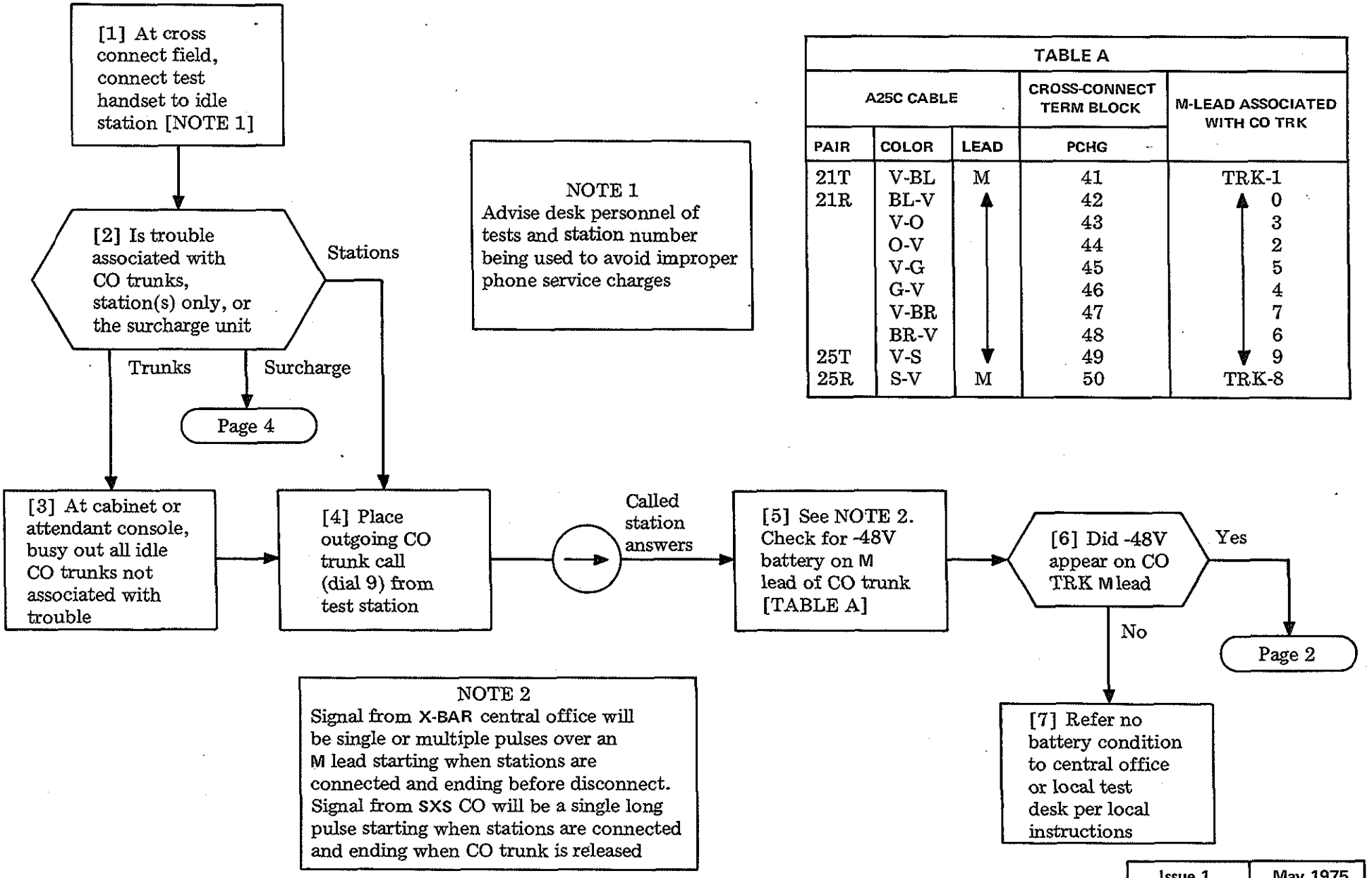

TABLE A

A25C CABLE			CROSS-CONNECT TERM BLOCK	M-LEAD ASSOCIATED WITH CO TRK
PAIR	COLOR	LEAD	PCHG	
21T	V-BL	M	41	TRK-1
21R	BL-V	↑	42	↑ 0
	V-O		43	3
	O-V		44	2
	V-G		45	5
	G-V		46	4
	V-BR		47	7
	BR-V		48	6
25T	V-S	↓	49	↓ 9
25R	S-V	M	50	TRK-8

CLEAR STATION MESSAGE REGISTER (SMR) TROUBLE (SD-5E021)

[8] Did SX relay in SMR circuit in external cabinet operate

No → [9] Check operate path for SX relay [FIG. 1]

Yes ↓

[10] Does LINE message register score (step to next number) [NOTE 3]

No → [11] Check operate path for LINE message register [FIG. 2]

Yes ↓

[12] Does TRK message register score (step to next number) [NOTE 3]

No → [13] Check operate path for TRK message register [FIG. 3]

Yes ↓

Page 3

NOTE 3
When call requires several station message units, SX relay will operate and release with LINE register and COD relay following SX relay for each unit registration

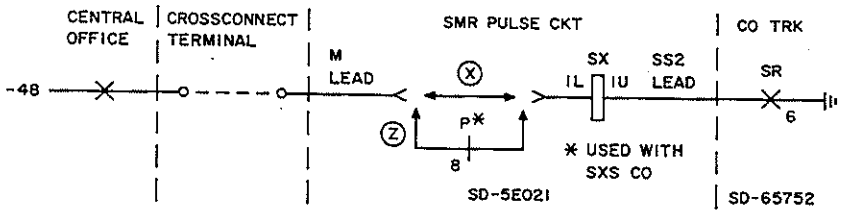

FIG. 1

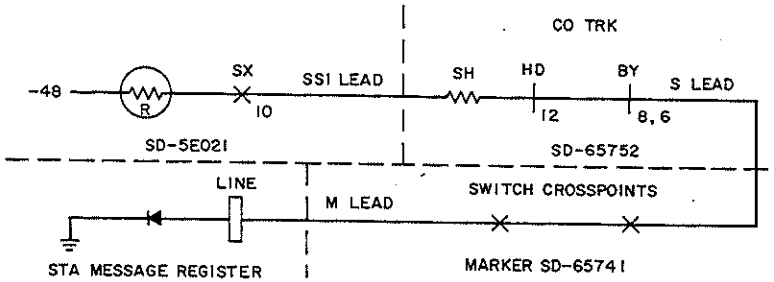

FIG. 2

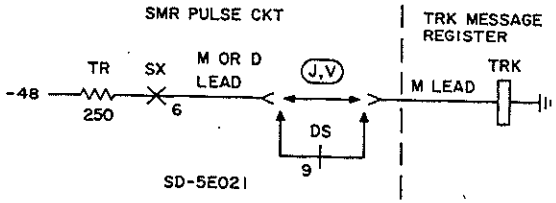

FIG. 3

CLEAR STATION MESSAGE REGISTER (SMR) TROUBLE (SD-5E021)

[14] Did COD relay operate

No → [15] Check operate path for COD relay [FIG. 4]

Yes → [16] Is central office step-by-step (SxS)

Yes → [17] Did P relay operate [NOTE 4]

Yes → [18] Do SX and COD relays release when P relay operates

Yes

No

No → [20] Check operate path of P relay [FIG. 5]

No → [19] Check contact 8B of P relay for short [FIG. 1]

NOTE 4
When SX relay remains operated longer than 200 to 1000 milli-seconds, P relay should operate

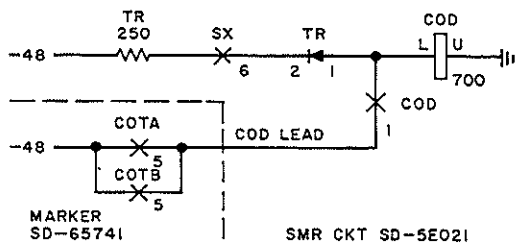

FIG. 4

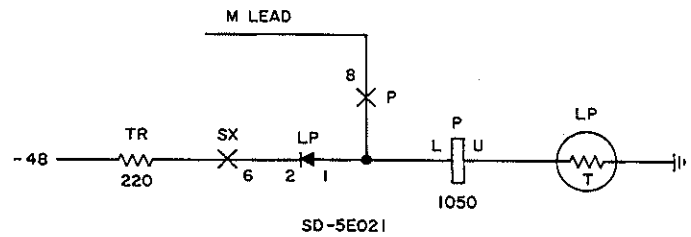

FIG. 5

Issue 1	May 1975
551-100-101	TAP
PAGE 3 of 6	156

CLEAR STATION MESSAGE REGISTER (SMR) TROUBLE (SD-5E021)

[21] Place outgoing CO trunk call (dial 9) from test station

[22] Did MS relay operate

No → [23] Check operate path of MS relay [FIG. 6]

Yes

[24] Did DS relay in surcharge circuit operate when call was completed

No → [25] Did S1 relay in CO TRK circuit involved release

Yes → [26] Check operate path for DS relay [FIG. 7]

Yes → Page 5

No → [27] Check contact 7B of DS relay and contact 10M of S1 relay providing shunt path to keep DS relay from operating [FIG. 7]

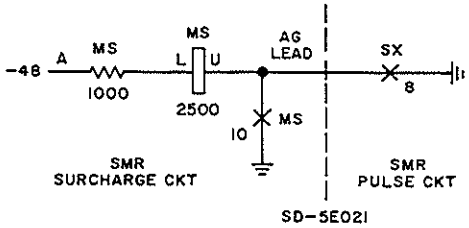

FIG. 6

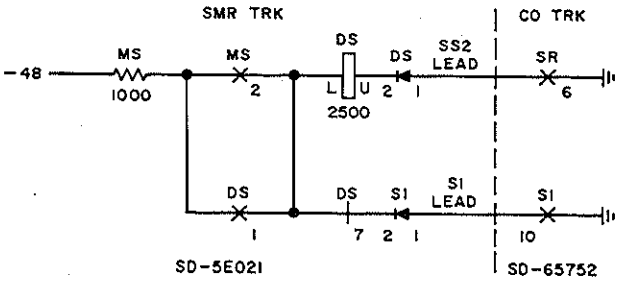

FIG. 7

CLEAR STATION MESSAGE REGISTER (SMR) TROUBLE (SD-5E021)

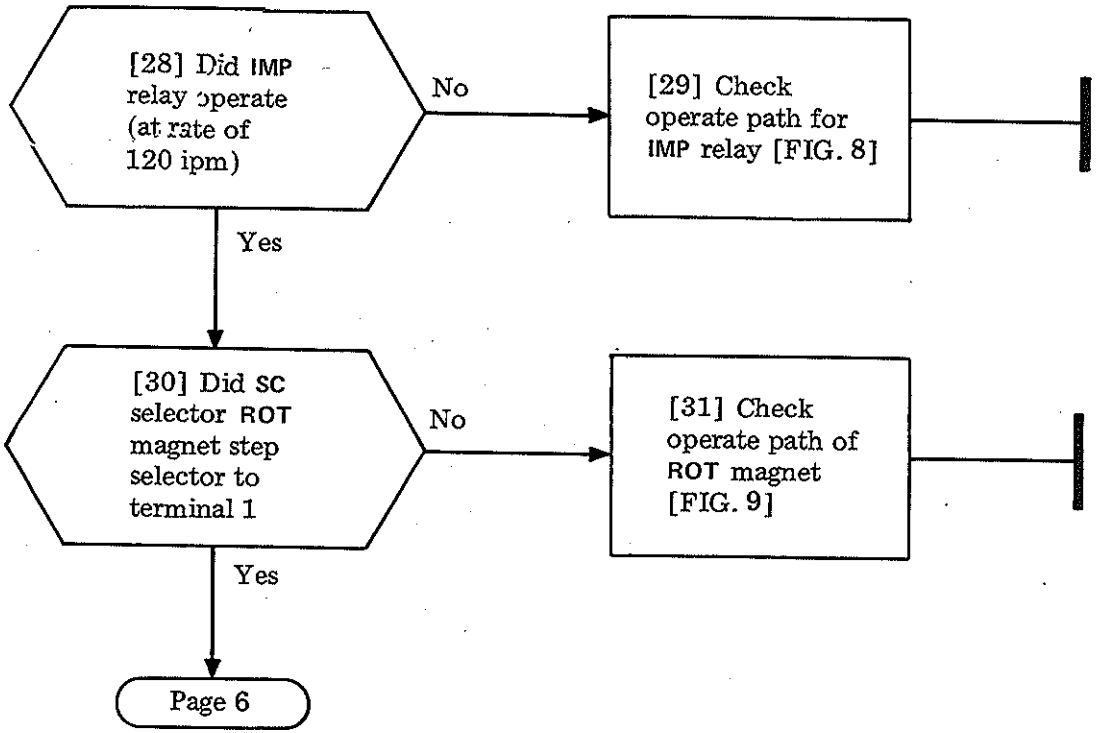

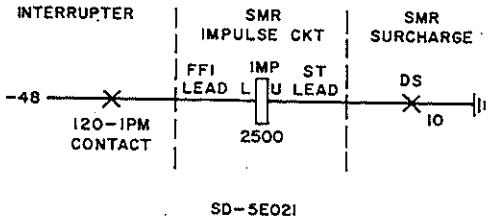

FIG. 8

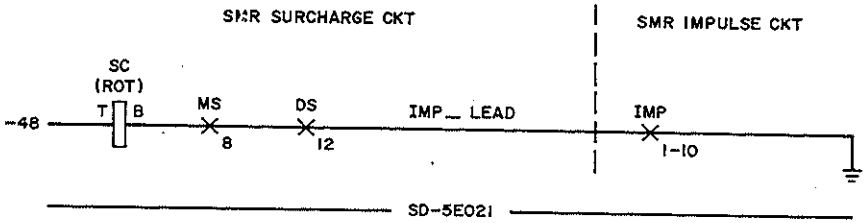

FIG. 9

CLEAR STATION MESSAGE REGISTER (SMR) TROUBLE (SD-5E021)

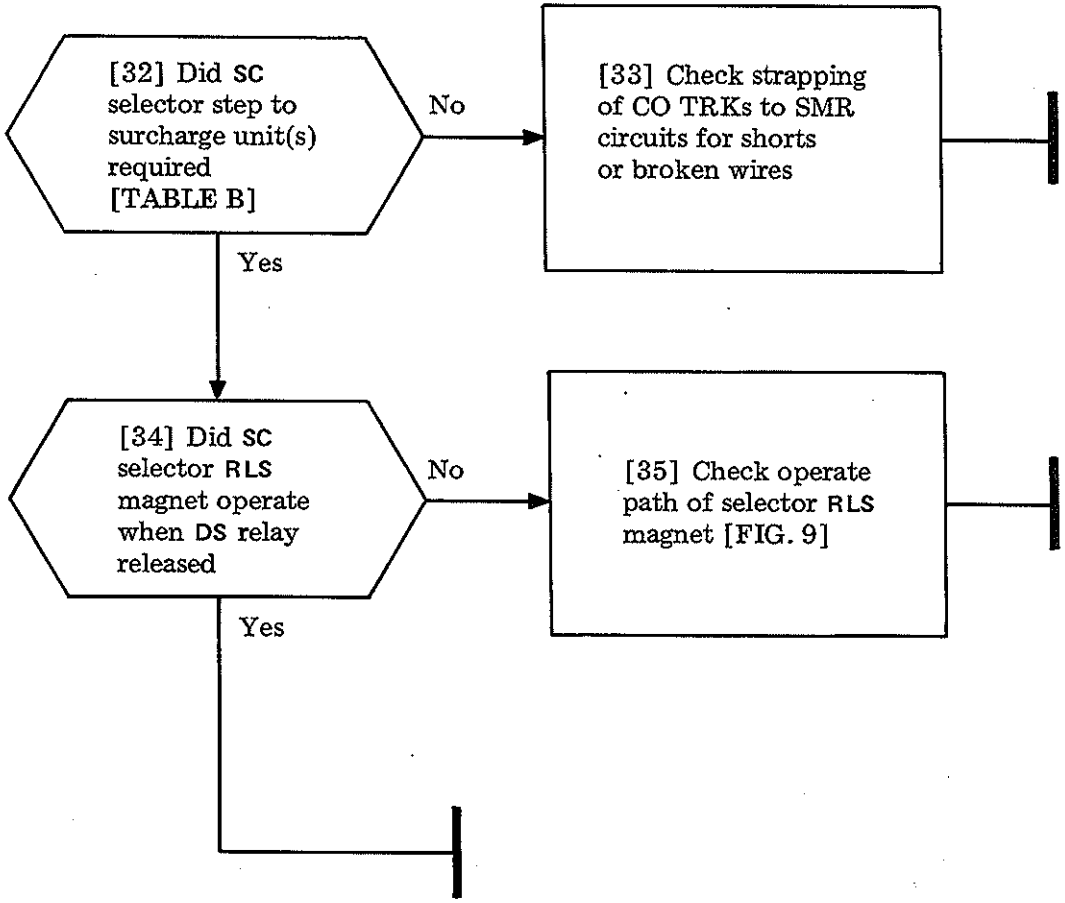

TABLE B	
SC SELECTOR TERMINALS	REGISTRATION UNITS
1	unused
2	unused
3	0
4	1
5	2
6	3
7	4
8	5
9	6
10	unused

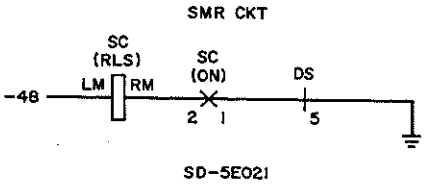

FIG. 10

SUMMARY

Reported "TOUCH-TONE" troubles may be caused by the TT receiver, its associated dial pulse register, or translation circuit (type "A" receiver applique). If TT equipment is operating, the **KP_ (1-0)** leads will be grounded during digit registration. This can be checked at **STR_ (1-10)** fixed contact at the associated DP register, at a pin of J1 (see TABLE A) for C-type receivers, or **H_** relay contacts (TABLE B) at type A receiver appliques. Repair of C type receivers (slide 1) is by replacement. Type A receivers are mounted externally and have replaceable boards. If receivers check OK, refer to TAP-146 for DP register trouble

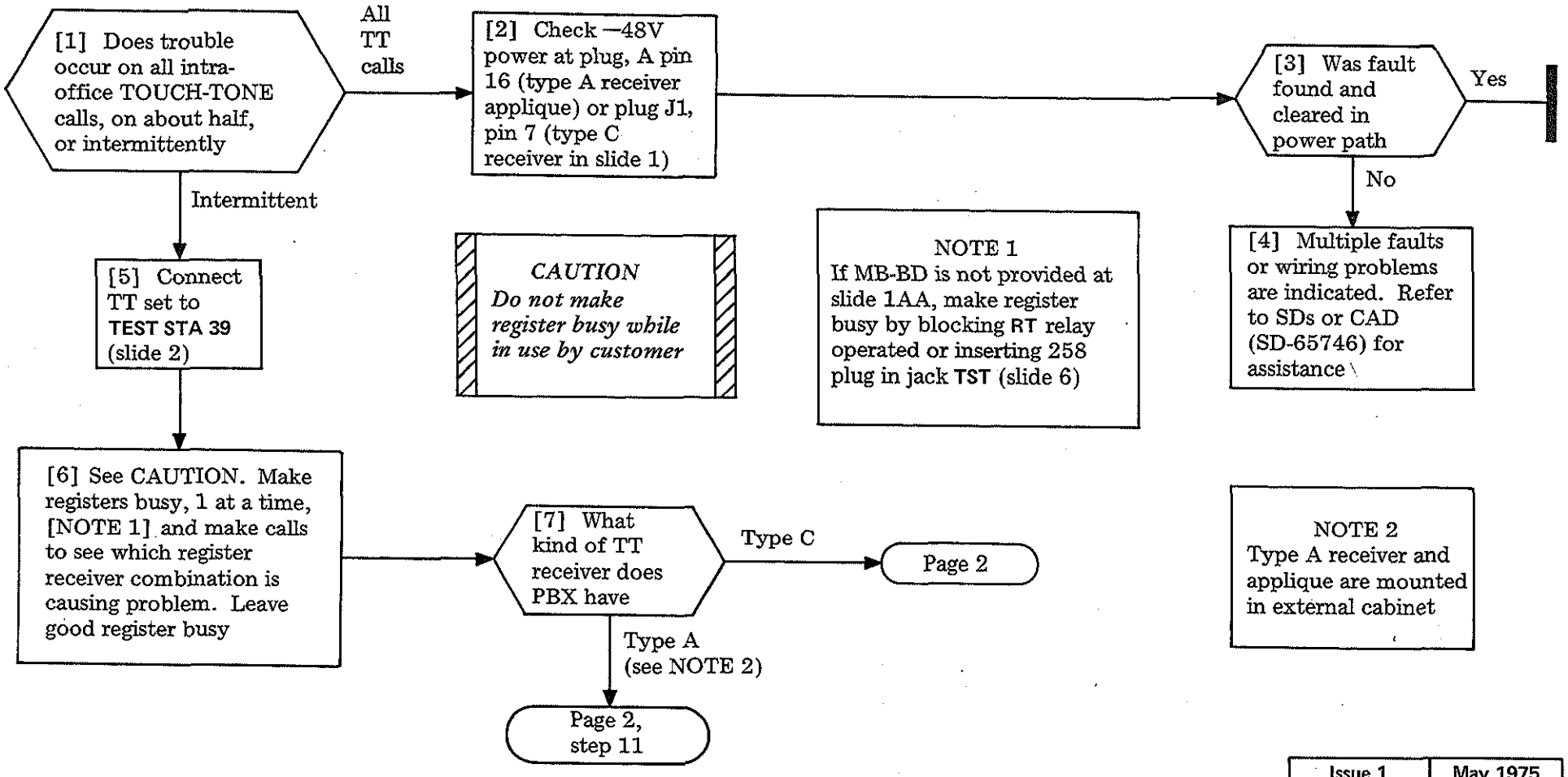

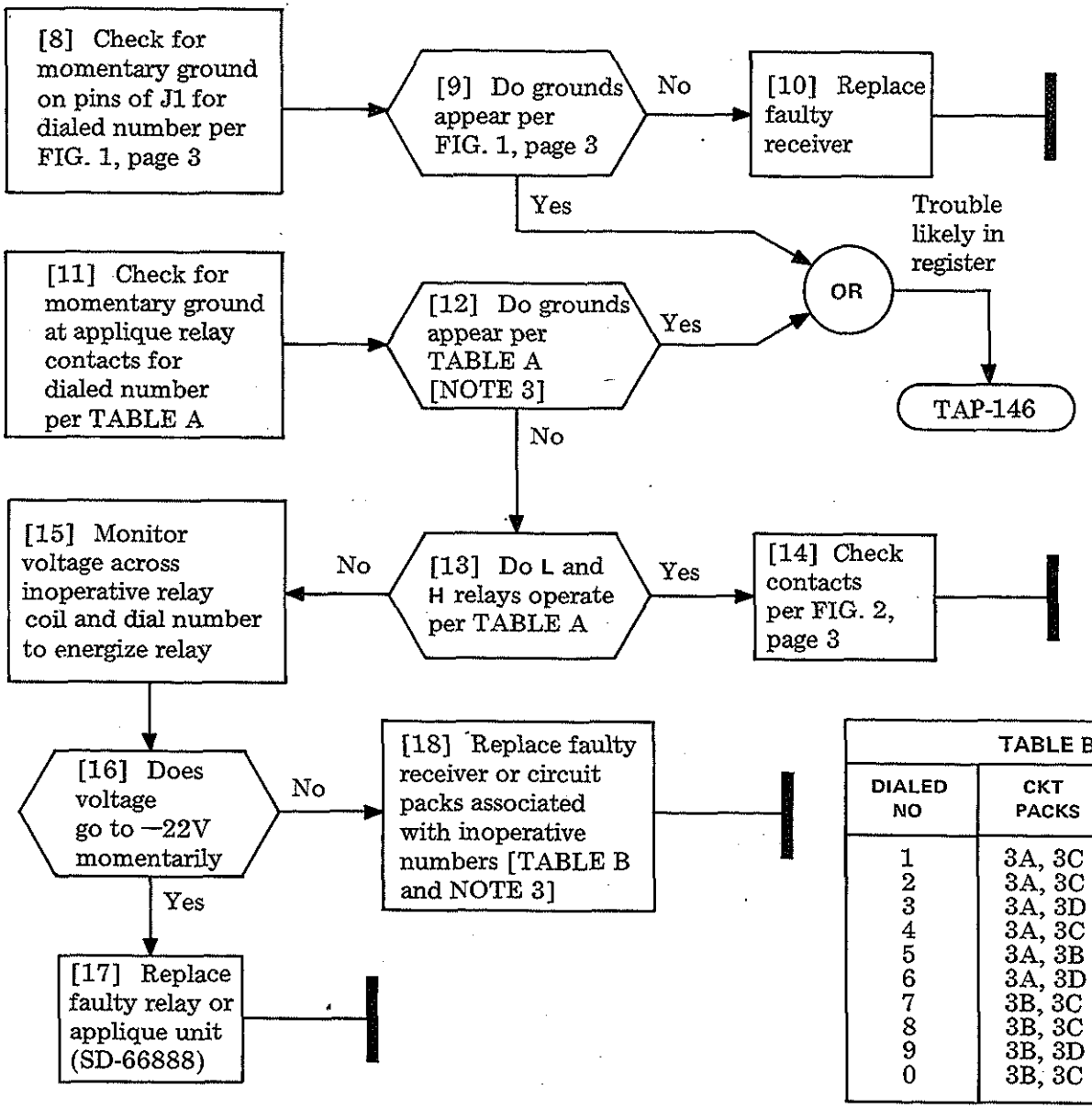

NOTE 3
If problem appears to be timing or irregular fault, replace CPS 1, 2, 5, and 6 (if available) before replacing entire unit

TABLE A

DIALED NO	REG LEAD	OPERATED H RELAY/CONTACT		OPERATED L RELAY
1	KP1	H1	2	L1
2	KP2	H2	2	L1
3	KP3	H3	2	L1
4	KP4	H1	5	L2
5	KP5	H2	5	L2
6	KP6	H3	5	L2
7	KP7	H1	6	L3
8	KP8	H2	6	L3
9	KP9	H3	6	L3
0	KP0	H2	9	L4

TABLE B

DIALED NO	CKT PACKS	EQUIP CODE
1	3A, 3C	B3, B5
2	3A, 3C	B5
3	3A, 3D	B6
4	3A, 3C	B5
5	3A, 3B	B4
6	3A, 3D	B3, B6
7	3B, 3C	B4, B5
8	3B, 3C	B5
9	3B, 3D	B6
0	3B, 3C	B4, B5

CLEAR PBX "TOUCH-TONE®" RECEIVER TROUBLES

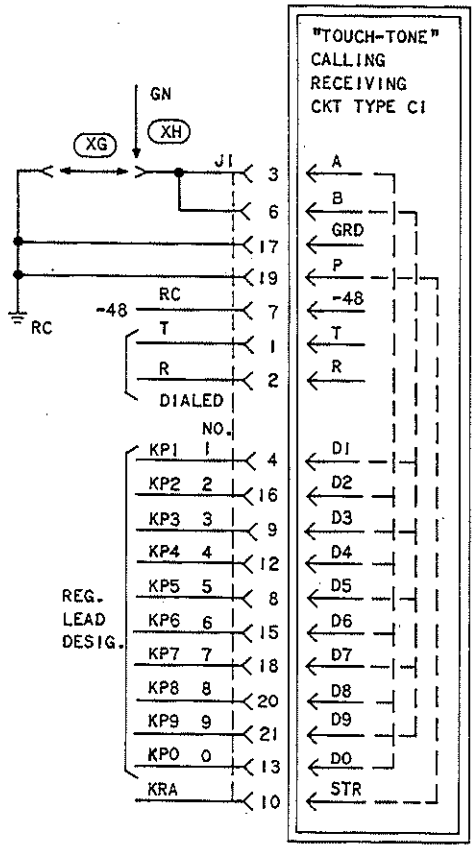

FIG. 1

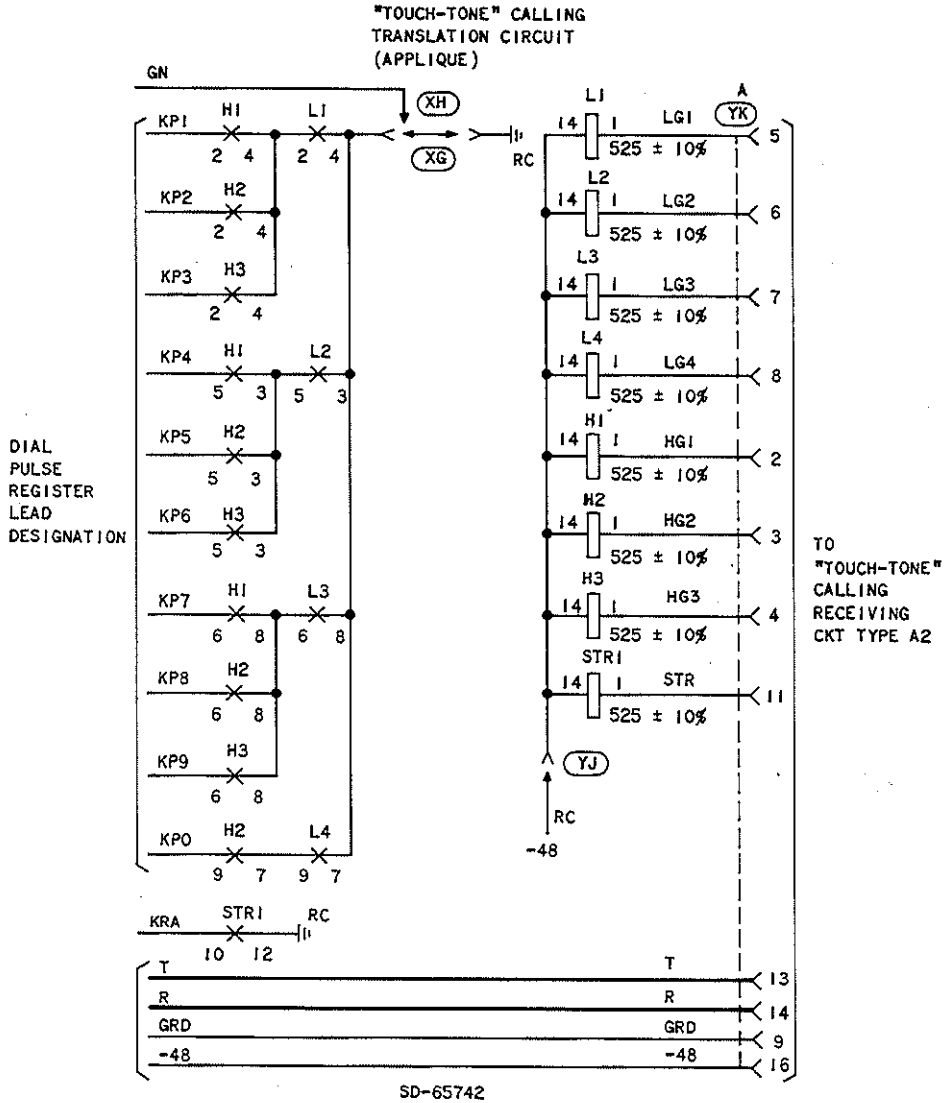

FIG. 2

Issue 1	May 1975
551-100-101	TAP
PAGE 3 of 3	157

SUMMARY

This procedure aids trouble clearing in traffic usage (TU) lead going to a traffic measurement set (TMS). Signaling is done by grounding the TU lead. Faulty grounding would normally occur because of improper relay closure or bad contacts. Use (1) volt-ohmmeter, (2) traffic lead test set, or (3) locally made test set (DLP-122) to isolate troubles. Refer to TABLE A for applicable figure on SD.

NOTE 1

If not equipped with MB-BD circuit (slide 2AB), block operated RT relay (REG__) slide 6

TABLE A

CIRCUIT OR TRUNK	STEP /	PAGE	FIG.
Registers	5	1	1
Junctors	11	2	2
CO Trunk	15	2	3, 4
Attendant Trunk	30	4	5
Busy-Tone Trunk	39	5	6
Ringdown Tie Trunk	44	5	7
Station Dial Transfer	51	6	8
Universal Line Circuit	52	6	9
Links	56	7	10

CAUTION

1. *Consult traffic department before disconnecting remote scanner and associated equipment to clear trouble*
2. *Do not busy out equipment that would interrupt a call in progress*

[1] Locate P3, P4 connectors of J58829A, L57 cable

[2] Locate TMS terminals at slide 3V

[3] See CAUTION 1. Disconnect remote scanner

AND

[4] See TABLE A. Go to step number associated with trouble

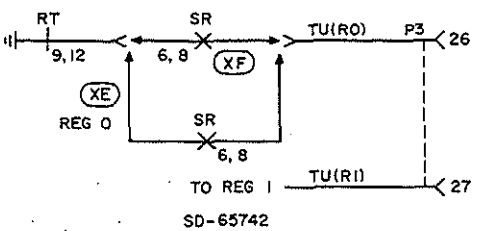

FIG. 1

[5] See CAUTION 2. Busy out register not associated with trouble [NOTE 1]

[6] Go off-hook at convenient station or test handset at station 39

PBX dial tone heard

[7] Check ground path through SR and RT relay contacts (of register with trouble) from P3 connector [FIG. 1]

AND

[8] Is ground path good

No

[10] Clear trouble per FIG. 1 and repeat steps 5 through 9 to verify repair

Yes

[9] Restore registers to normal

[11] Is JCTR make-busy switch operated (pulled out) at MB-BD circuit (slide 2AB)

Yes → [12] Restore switch to normal → [13] Is trouble cleared

Yes →

No → [14] Multiple or wiring fault is indicated. Use FIG. 2 to clear trouble

No →

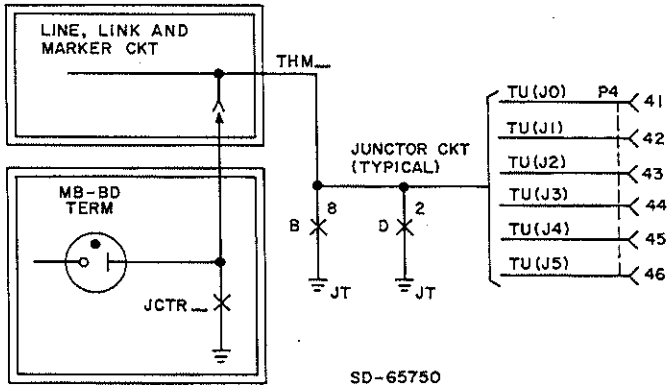

FIG. 2

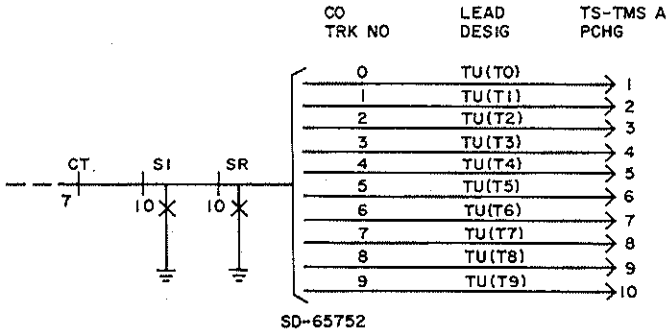

FIG. 3

[15] See CAUTION 2. Insulate contacts 5, 6, and 7 of BY relay

[16] Block CT relay operated → SR relay operates → AND

No → step 26

[17] Check path to ground on TU (T__) lead from TS-TMS A terminal [FIG. 3] located in slide 3V

AND → [18] Is TU (T__) lead grounded

Yes → Page 3

No → [19] Check SR 10-make contact. Repeat step 17

CLEAR TRAFFIC LEAD TROUBLE

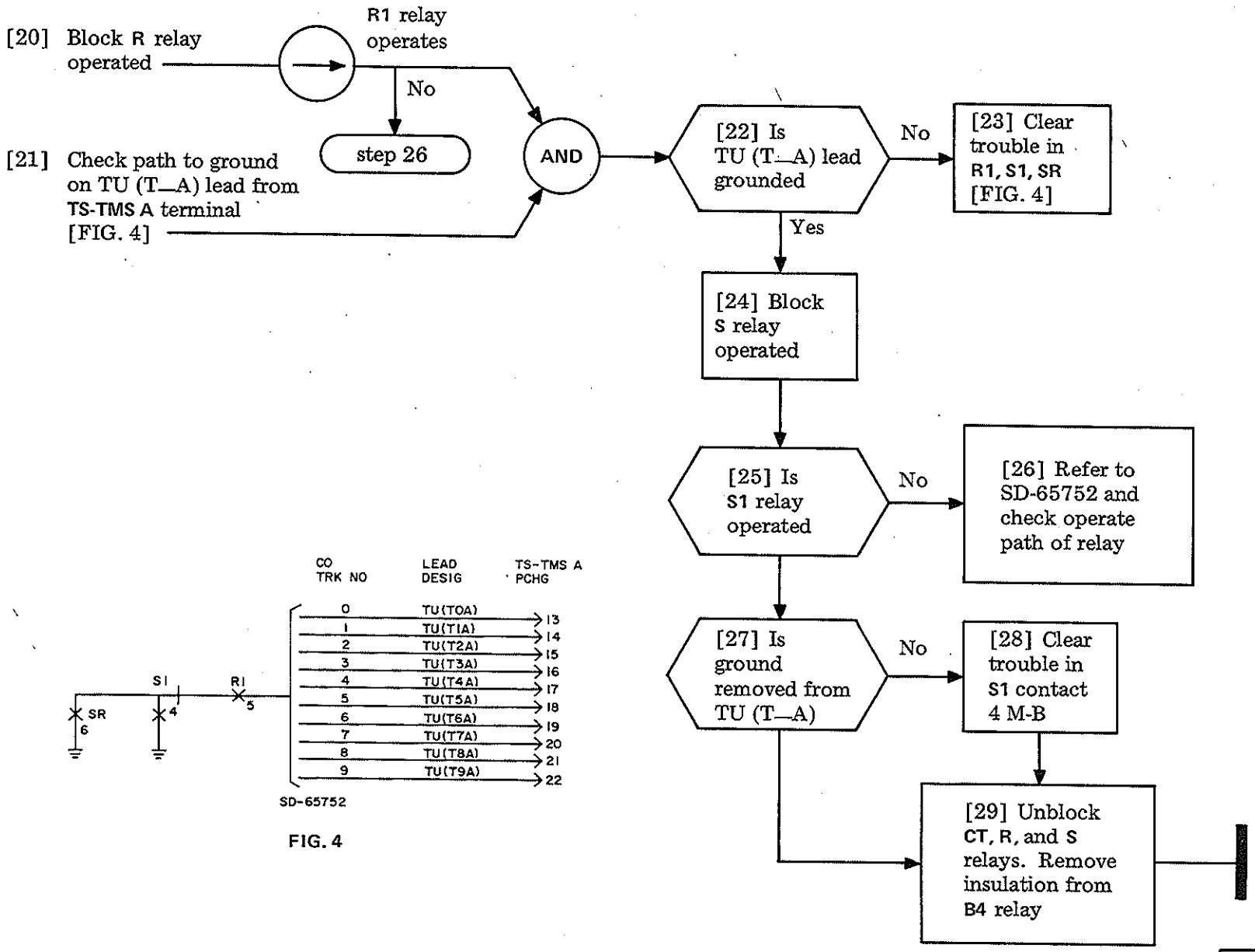

FIG. 4

CLEAR TRAFFIC LEAD TROUBLE

[30] Busy out attendant trunks not associated with trouble [NOTE 2]

[31] While monitoring pins on P4 for ground [FIG. 5], place call to attendant (dial 0) — DO NOT depress attendant pickup key on console yet

[32] Restore other ATND TRK MB keys to normal [NOTE 2]

[33] Are TU (AT_) and TU (AT_A) leads grounded

Yes

No

[34] At console, depress ATND TRK pickup key

[35] Is ground removed from TU (AT_A) lead

No

Yes

[36] Terminate call

[37] Is ground removed from TU (AT_) lead

No

Yes

[38] Clear trouble using FIG. 5. Repeat steps 30 through 37 to verify repair

NOTE 2
If not equipped with MB-BD in slide 2AB, circuit is made busy by blocking B relay operated

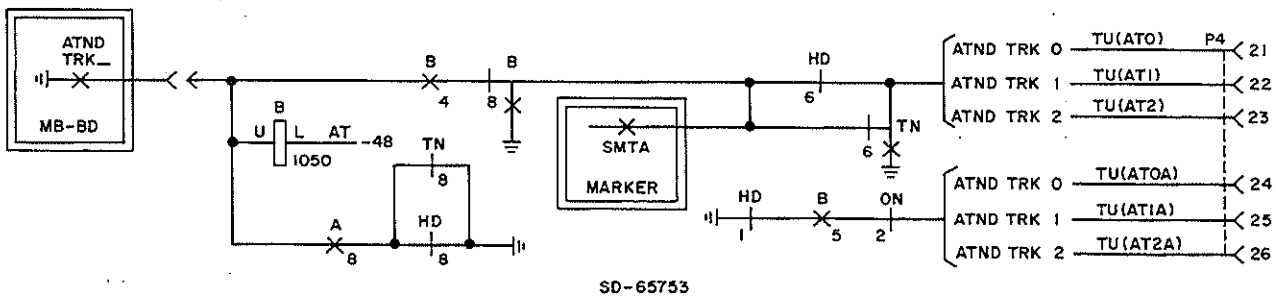

FIG. 5

CLEAR TRAFFIC LEAD TROUBLE

[39] At slide 3V, monitor TU (BTT) lead on TS-TMS A (terminal 33) for ground

[40] While observing A and RA relays (slide 4AA), place call to busy station

AND

[41] Do relays operate

Yes

[42] Is TU (BTT) lead grounded

Yes

No

No

[43] Clear trouble using FIG. 6. Repeat steps 38 through 41 to verify repair

[44] At slide 3V, monitor TU (T_) and TU (T_A) leads for ground from TS-TMS A terminals [FIG. 7]

[45] Place outgoing call from attendant position

[46] Is TU (T_) lead grounded

No

[47] Check S1 relay and 10-make contacts [FIG. 7]. Clear trouble and verify

Yes

[48] Arrange for incoming call to be placed

[49] Is TU (T_A) lead grounded through R relay 1-make, and TU (T_) lead grounded through LO 8-make [FIG. 6]

No

[50] Clear trouble using FIG. 7. Repeat steps 40 through 46 to verify

Yes

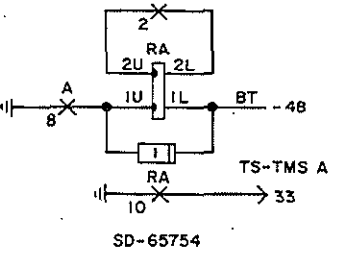

FIG. 6

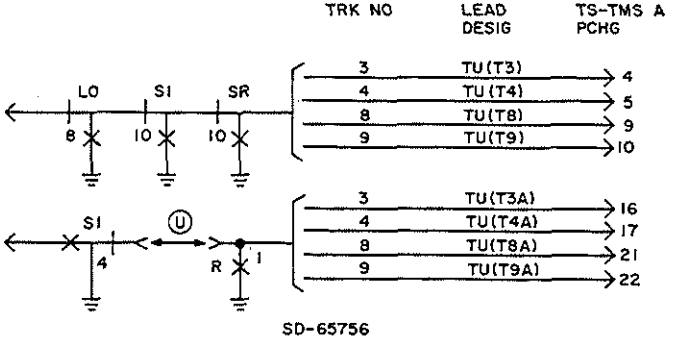

FIG. 7

CLEAR TRAFFIC LEAD TROUBLE

[51] Check relay operation and contacts of relays shown in FIG. 8

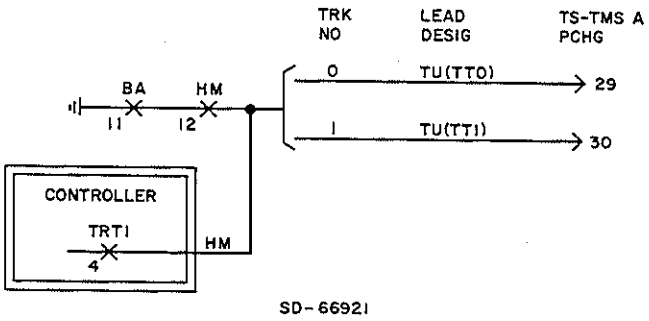

FIG. 8

[52] At slide 3V, monitor terminals listed in TABLE B (for the associated line circuit) for ground path

[53] See CAUTION 2. Operate corresponding S relay on line circuit

AND

[54] Does ground appear on TU(L8_, L8_A, L8_B) leads [NOTE 3]

Yes

No

[55] Clear trouble using FIG. 9. Repeat steps 51 through 53 to verify

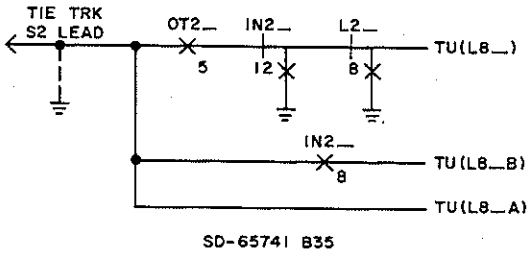

FIG. 9

NOTE 3
Ground is initially furnished through S relay coil

TABLE B	
LEAD DESIG	TS-TMS B PCHG
TU(L80)	13
81	14
82	15
83	16
84	17
85	18
86	19
87	20
88	21
TU(L89)	22
TU(L80A)	25
81	26
82	27
83	28
84	29
85	30
86	31
87	32
88	33
TU(L89A)	34
TU(L80B)	37
81	38
82	39
83	40
84	41
85	42
86	43
87	44
88	45
TU(L89B)	46

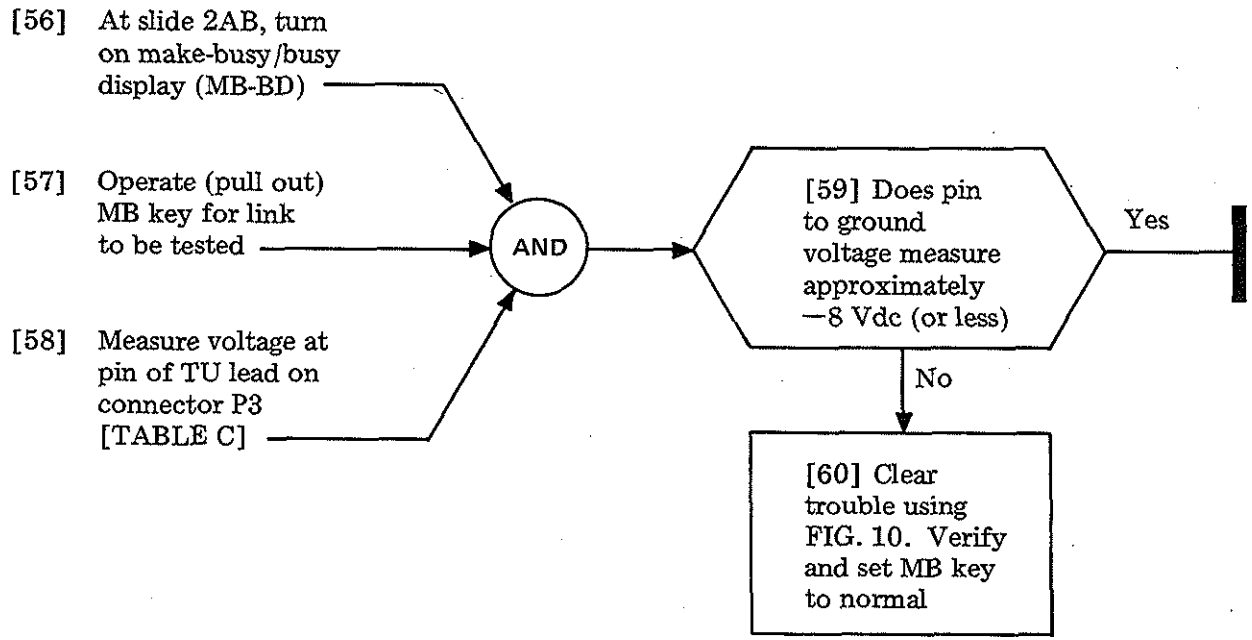

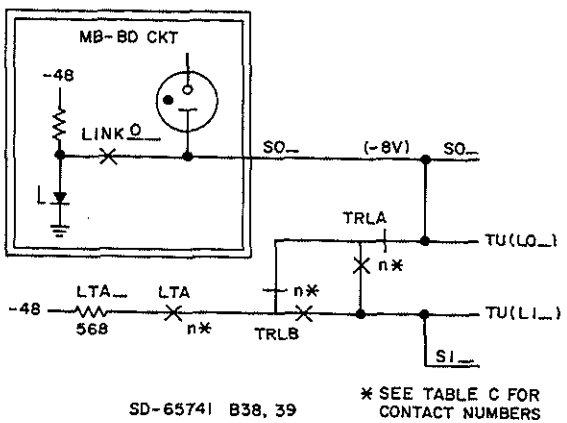

FIG. 10

TABLE C

LINK & LEAD DESIG	P3 PIN NO	FIXED RELAY CONTACTS		
		TRLA	TRLB	LTA
TU(L02)	16	12	3	1
03	17	11	4	2
04	18	10	6	3
05	19	9	7	4
06	20	3	12	9
07	21	4	11	10
08	22	6	10	11
TU (L09)	23	7	9	12
TU (L12)	24	12	3	1
13	25	11	4	2
14	26	10	6	3
15	27	9	7	4
16	28	3	12	9
17	29	4	11	10
18	30	6	10	11
TU (L19)	31	7	9	12

[1] Use REG DESIG to locate register relay operate path in FIG. 1 [TABLE A]

[2] Check register with reported trouble for open BAT lead (RB1), open coil, or faulty advance mechanism

[3] Check marker relays in operate path for crossed or dirty contacts or faulty relay operation (relay location shown in parentheses)

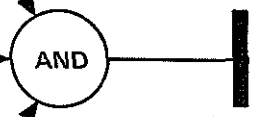

TABLE A

	REG. DESIG.	REGISTER FUNCTION
OVERFLOW	ROF	Dial pulse register overflow
	LOF	Link overflow
	BTOF	Busy-tone trunk overflow
	JOF	Junctor overflow
	OF8	Trunk group 8 overflow
	OF9	Trunk group 9 overflow
	OF0	Trunk group 0 overflow
TRAFFIC PEG COUNT	JPC	Junctor peg count
	BTPC	Busy-tone trunk peg count
	TPC8	Trunk group 8 terminating peg count
	OPC8	Trunk group 8 originating peg count
	TPC9	Trunk group 9 terminating peg count
	OPC9	Trunk group 9 originating peg count
	TPC0	Trunk group 0 terminating peg count
	OPC	Originating peg count
	TPC	Terminating peg count
TROUBLE	TOPC	Time out peg count
	STPC	Second trial peg count
	NCPC	No connection peg count
	TRPC	Trouble release peg count

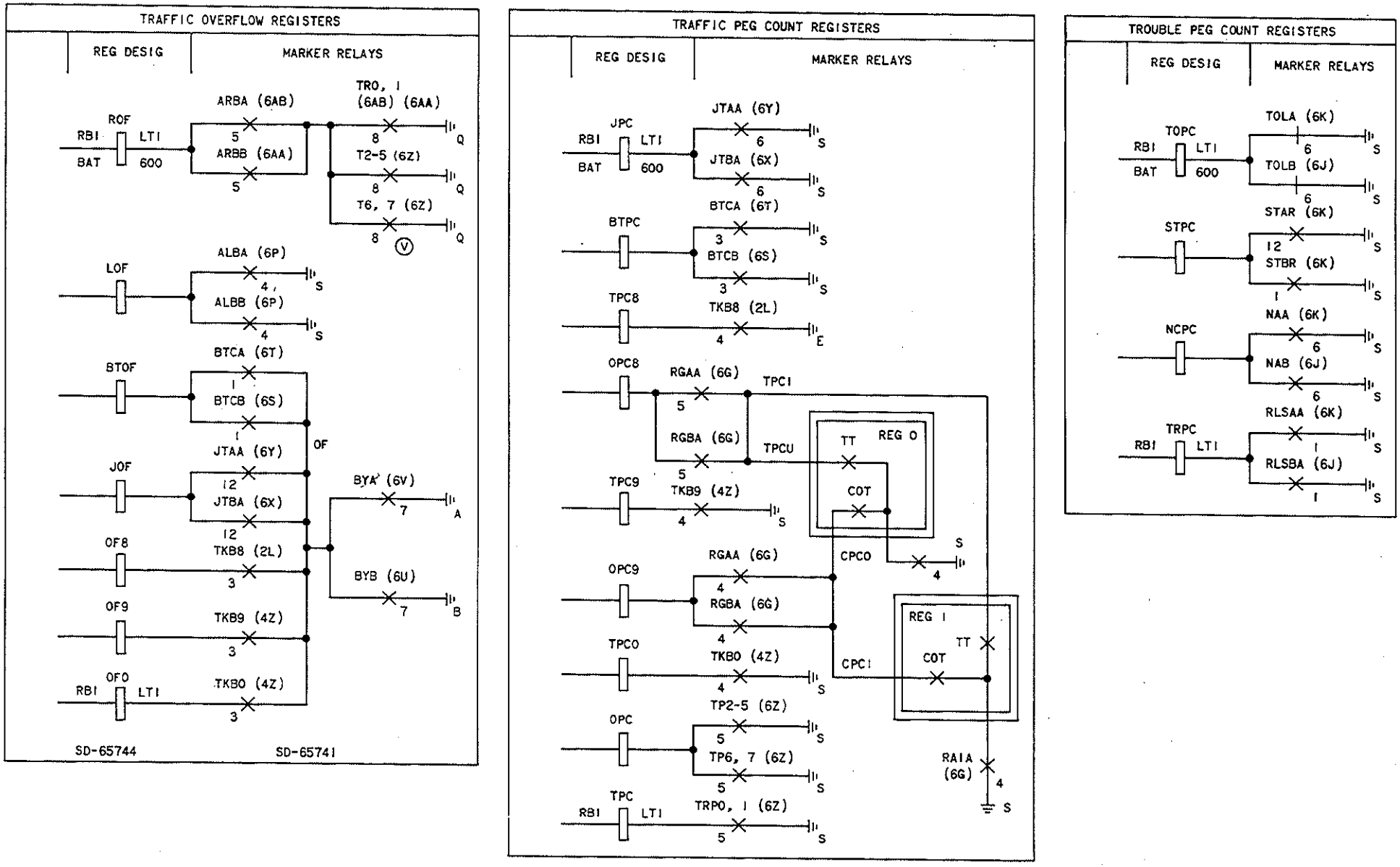

FIG. 1

CLEAR TRAFFIC REGISTER TROUBLE

Issue 1	May 1975
551-100-101	TAP
Page 2 of 2	159

SUMMARY

Initiate incoming CO trunk call(s) (eg, via test desk) using trunk(s) associated with reported trouble. Try to answer the call (from a station not inwardly restricted) by dialing the (8 or 8–) trunk answer code. Flash switchhook for PBX dial tone, and dial the code of another inwardly unrestricted station. Answer the call at the second station. Hang up at the first station and verify that CO trunk to second station connection has been made (conversation satisfactory). Repeat test calls until all CO trunks have been tested, or a failure occurs. This procedure assumes:

- Auxiliary position circuit is in external (may be in line-up) cabinet
- No alarm; CO trunks, marker, and both dial pulse registers function properly when 756A PBX not in Trunk Answer From Any Station (formerly Remote Trunk Answer) mode [NOTE 2]
- Audible signal is a bell (chime, lamp, gong, etc, may also be used).

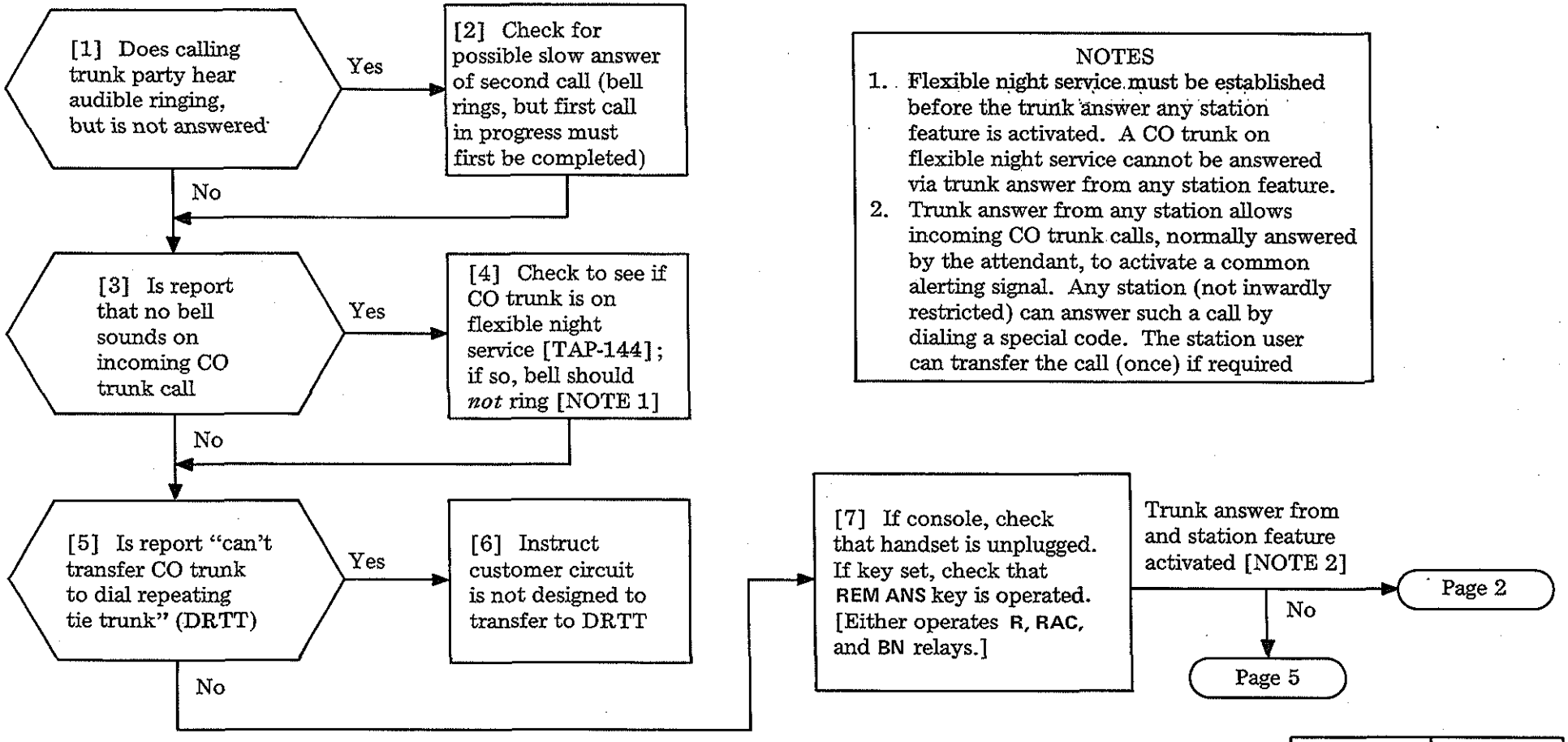

NOTES

1. Flexible night service must be established before the trunk answer any station feature is activated. A CO trunk on flexible night service cannot be answered via trunk answer from any station feature.
2. Trunk answer from any station allows incoming CO trunk calls, normally answered by the attendant, to activate a common alerting signal. Any station (not inwardly restricted) can answer such a call by dialing a special code. The station user can transfer the call (once) if required

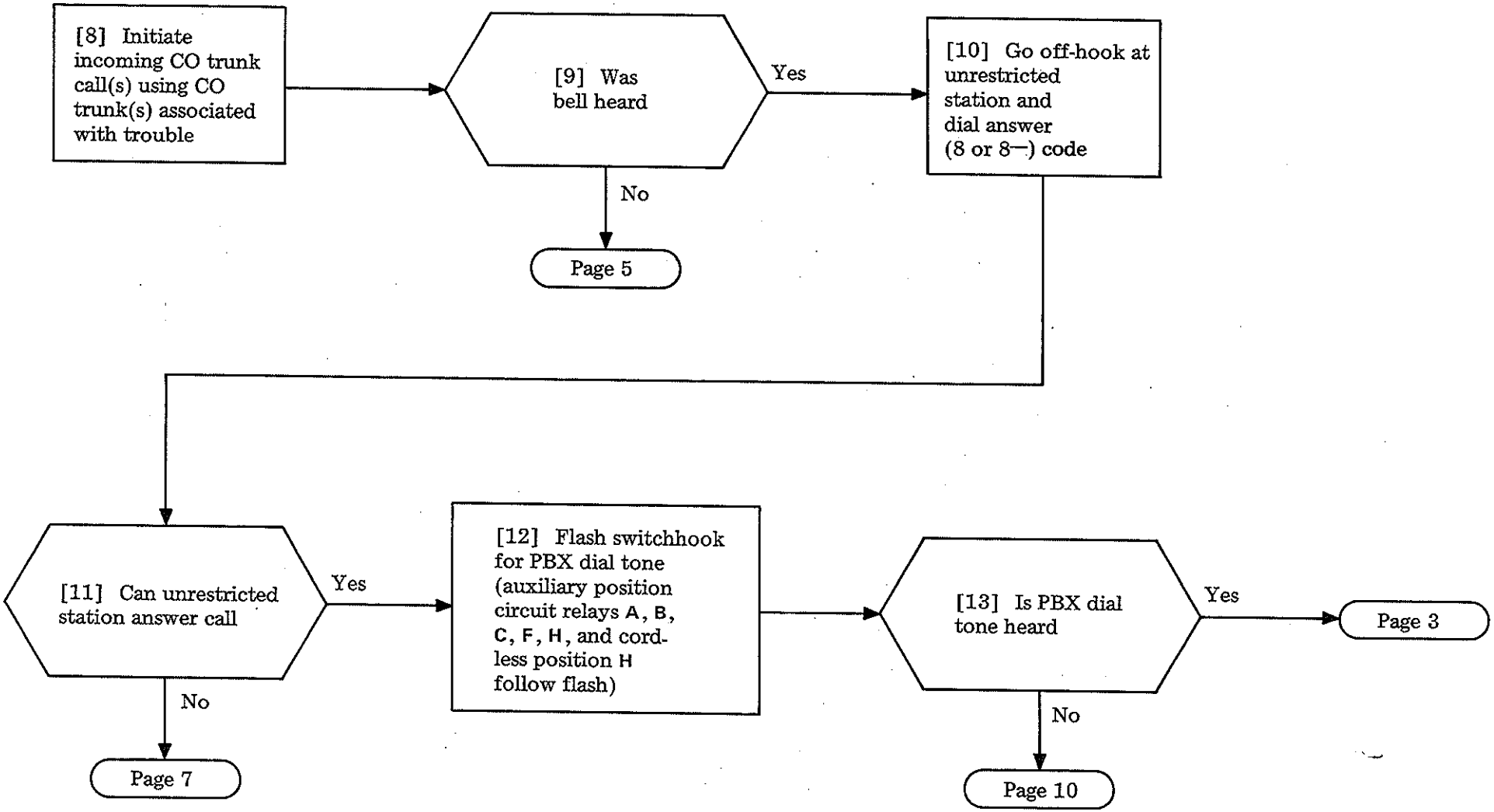

CLEAR TRUNK ANSWER FROM ANY STATION TROUBLE (WAS REMOTE TRUNK ANSWER) (SD-66910)

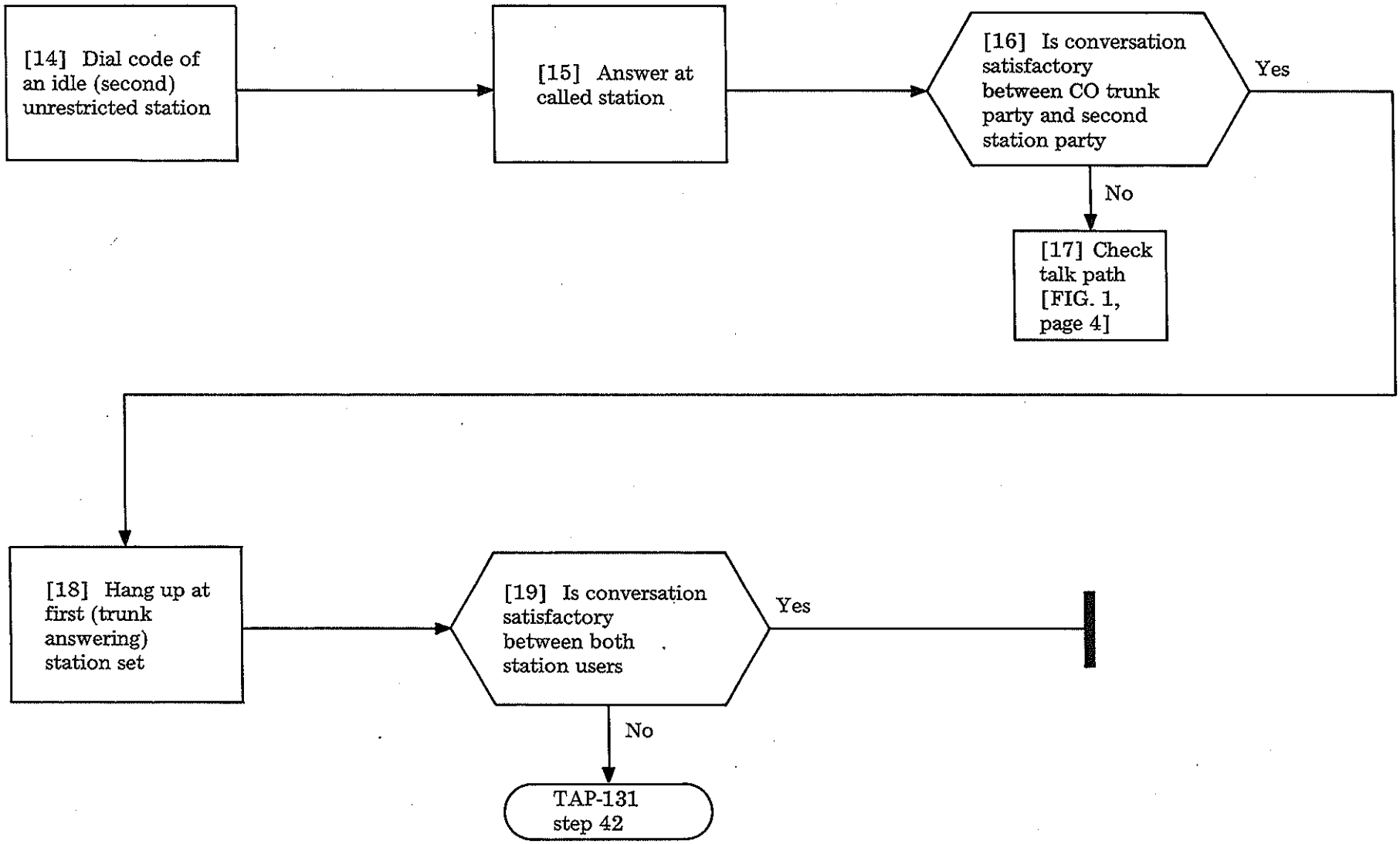

CLEAR TRUNK ANSWER FROM ANY STATION TROUBLE (WAS REMOTE TRUNK ANSWER) (SD-66910)

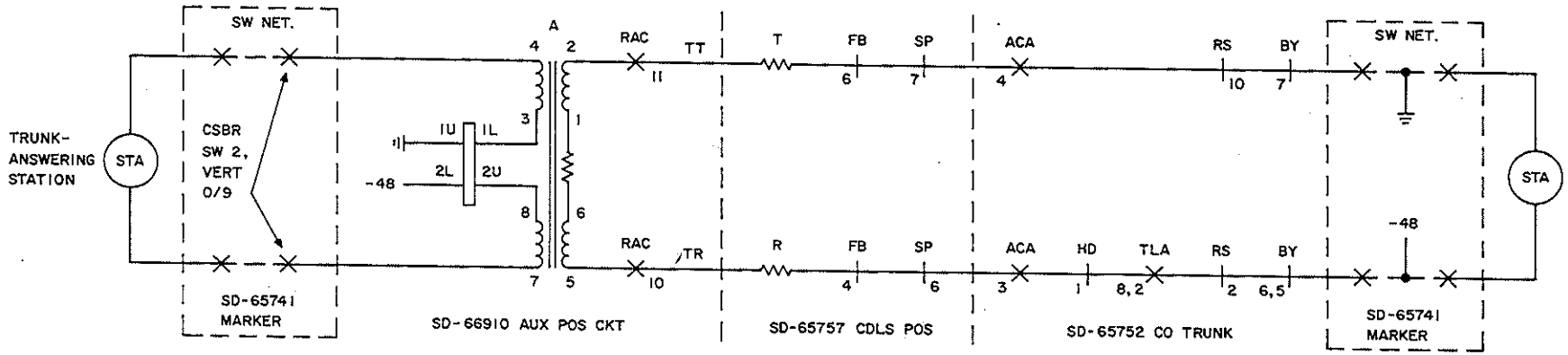

FIG. 1

CLEAR TRUNK ANSWER FROM ANY STATION TROUBLE (WAS REMOTE TRUNK ANSWER) (SD-66910)

[20] Is the RA (remote answer) relay operated

No → [21] Check operate path of RA relay [FIG. 2]

Yes ↓

[22] Is RAC (remote answer connect) relay operated

No → [23] Check operate path of RAC relay [FIG. 3]

Yes ↓

[24] Is BN (block night connection) relay operated

No → [25] Check operate path of BN relay [FIG. 4]

Yes ↓

Page 6

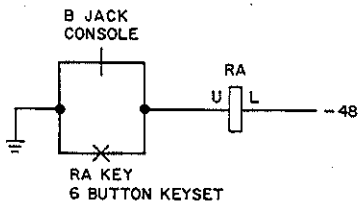

SD-66910

FIG. 2

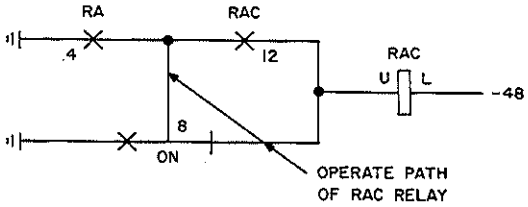

SD-66910 AUX POS CKT

FIG. 3

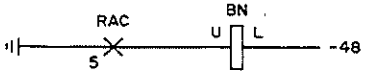

SD-66910
AUX POS CKT

FIG. 4

CLEAR TRUNK ANSWER FROM ANY STATION TROUBLE (WAS REMOTE TRUNK ANSWER) (SD-66910)

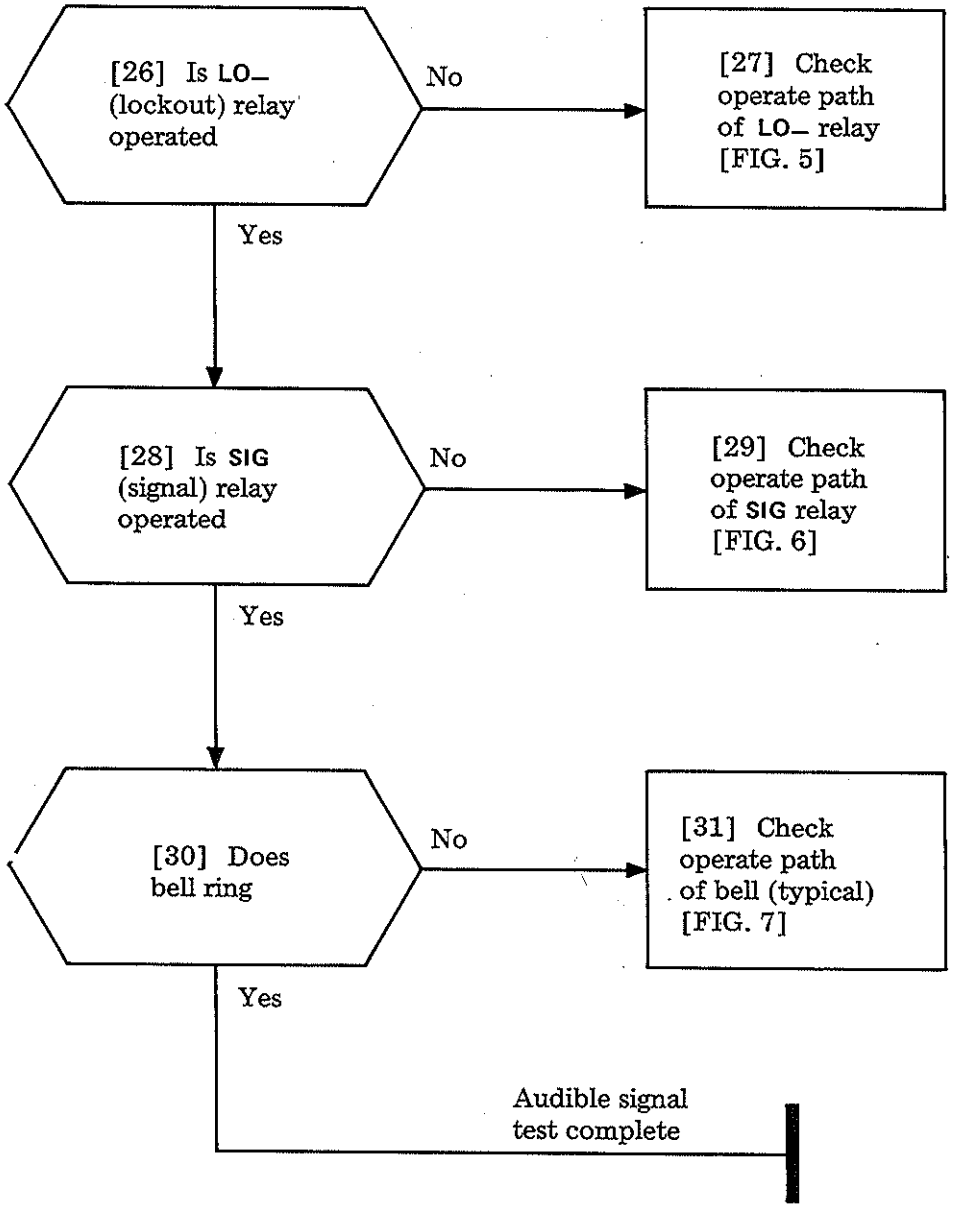

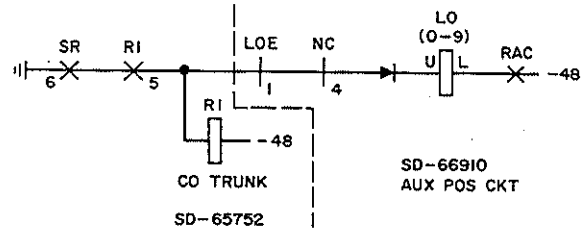

FIG. 5

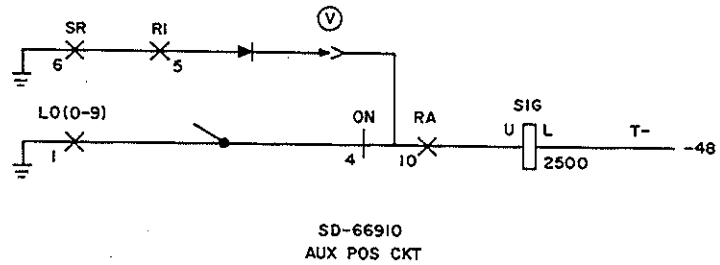

FIG. 6

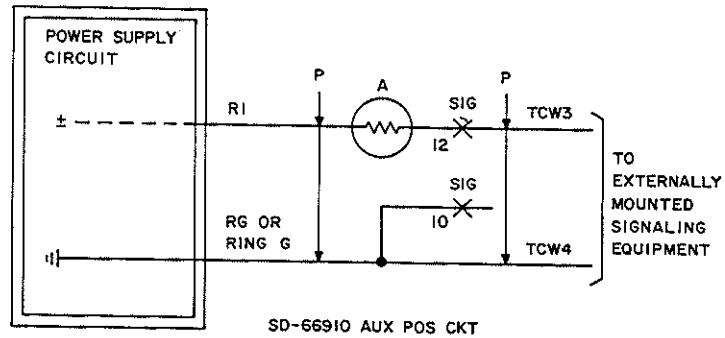

FIG. 7

CLEAR TRUNK ANSWER FROM ANY STATION TROUBLE (WAS REMOTE TRUNK ANSWER) (SD-66910)

[32] Is line hold magnet associated with trunk answer code operated

No → [33] Check operate path of LHM 20/29 [FIG. 8 and NOTE 3 for example]

Yes ↓

[34] Is A relay operated

No → [35] Check operate path of A relay [FIG. 9]

Yes ↓

[36] Is B relay operated

No → [37] Check operate path of B relay [FIG. 10]

Yes ↓

Page 8

NOTE 3
If code 83 is dialed for trunk answer from any station, LHM 3 should operate at crossbar switch 2, located on slide 2

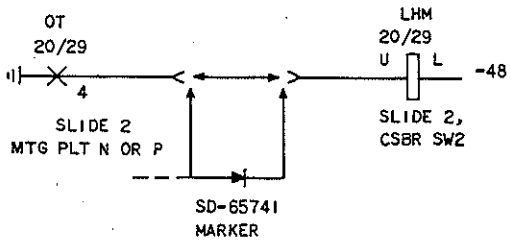

FIG. 8

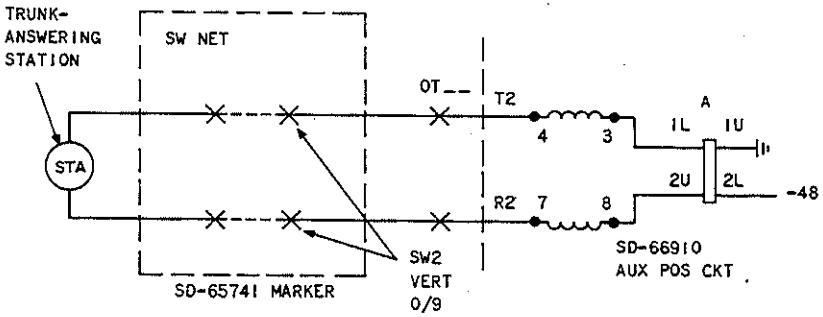

FIG. 9

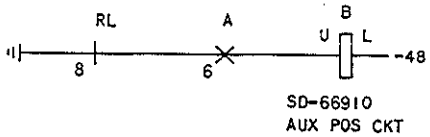

FIG. 10

CLEAR TRUNK ANSWER FROM ANY STATION TROUBLE (WAS REMOTE TRUNK ANSWER) (SD-66910)

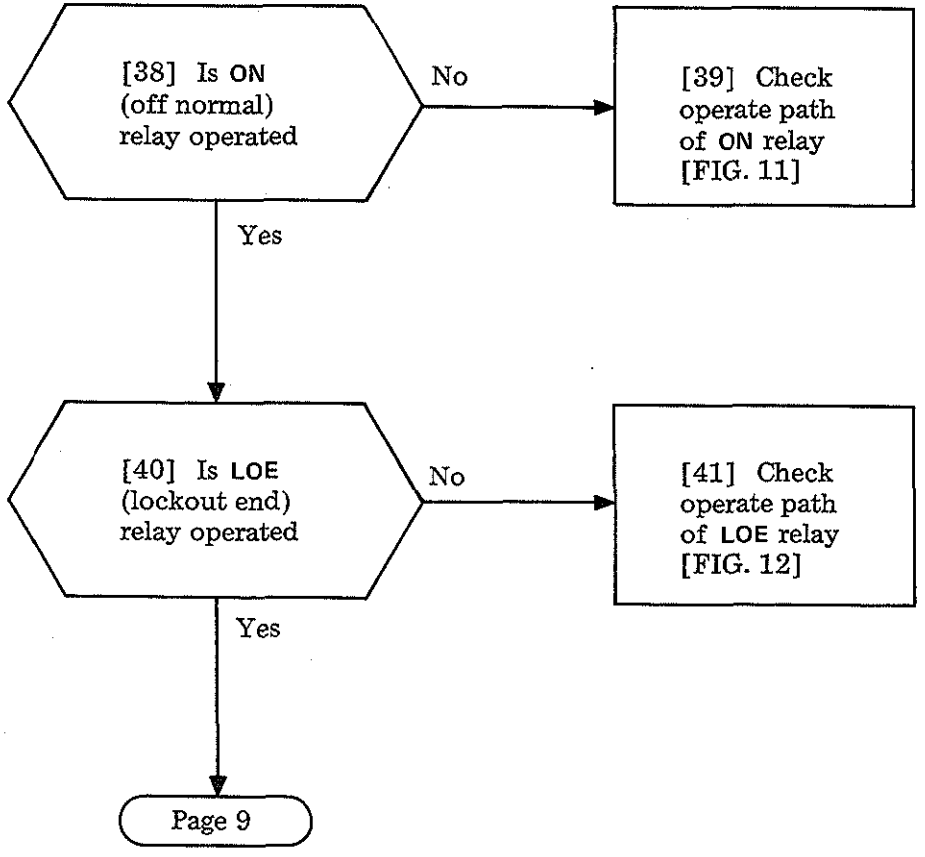

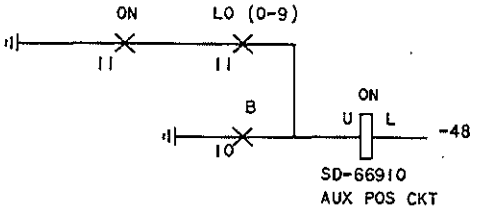

FIG. 11

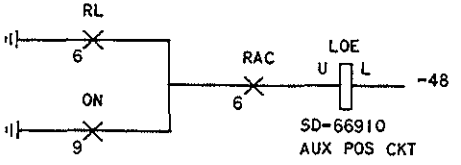

FIG. 12

CLEAR TRUNK ANSWER FROM ANY STATION TROUBLE (WAS REMOTE TRUNK ANSWER) (SD-66910)

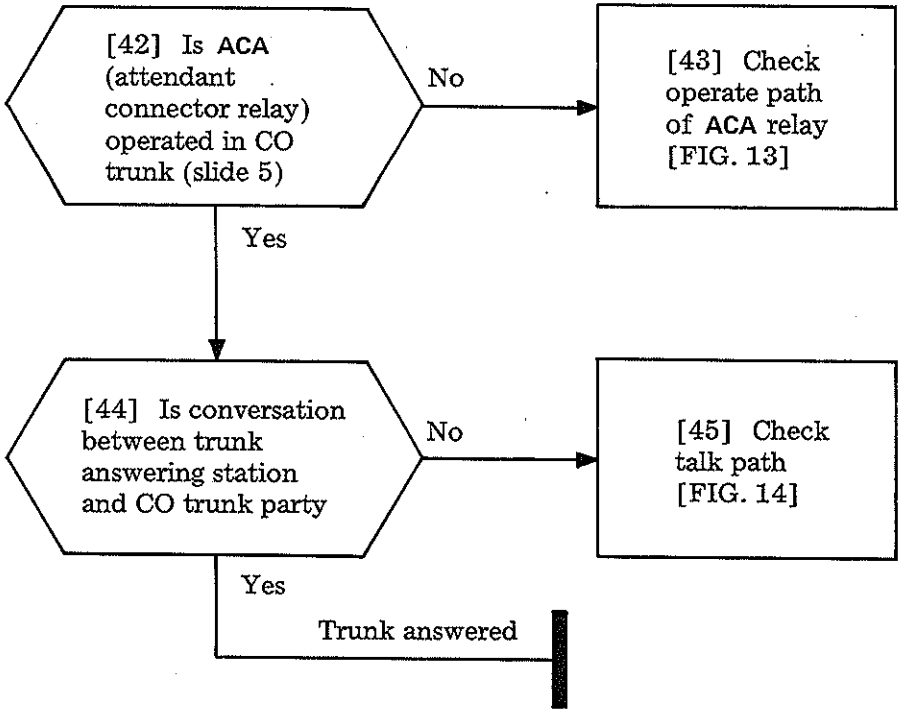

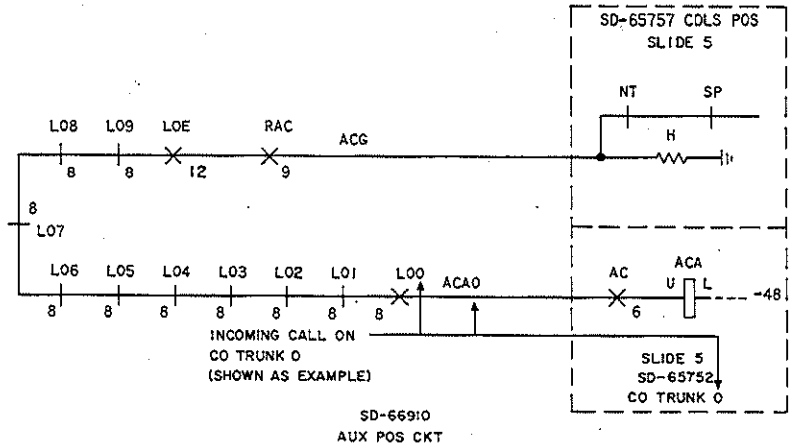

FIG. 13

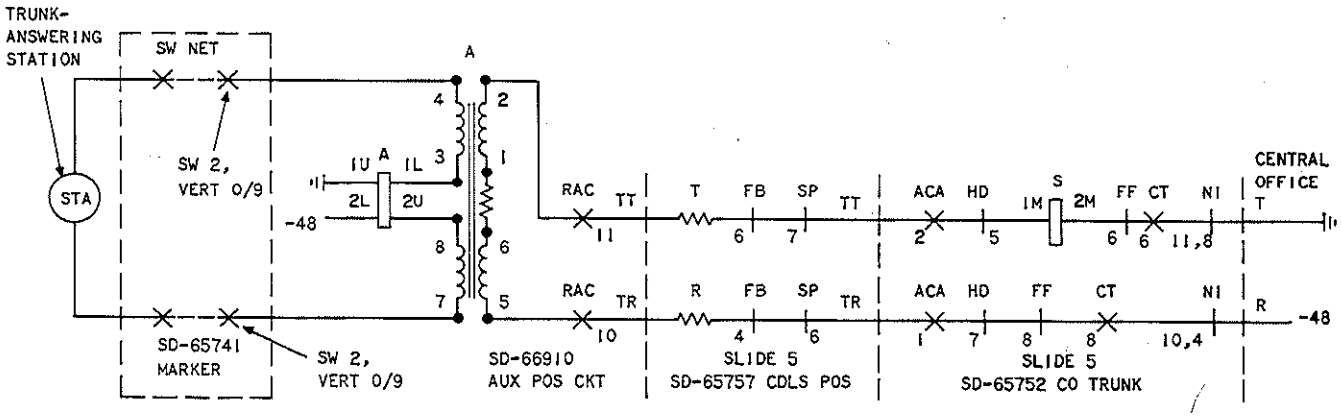

FIG. 14

Issue 1	May 1975
551-100-101	TAP
PAGE 9 of 10	160

CLEAR TRUNK ANSWER FROM ANY STATION TROUBLE (WAS REMOTE TRUNK ANSWER) (SD-66910)

[46] Did C relay operate and release

No → [47] Check C relay operate and release (via 7B of A relay) path [FIG. 15]

Yes ↓

[48] Did F (flash) relay operate and release

No → [49] Check F relay operate, release (via 10M of B relay) path [FIG. 16]

Yes ↓

[50] Did H (hold) relay operate and release

No → [51] Check operate, release (via 10M of B relay) path of H relay [FIG. 16]

Yes ↓

[52] Did H relay in cordless position circuit operate and release

No → [53] Check operate, release path of H relay in cordless position circuit (via 8M of H relay in auxiliary position circuit [FIG. 17]

Yes ↓

PBX dial tone heard — (marker connects dial pulse register)

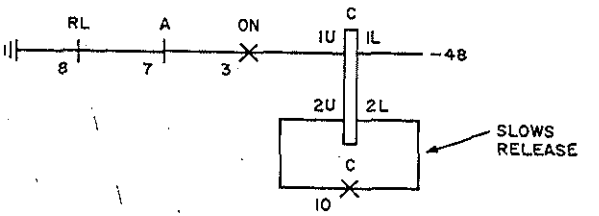

SD-66910 AUX POS CKT

FIG. 15

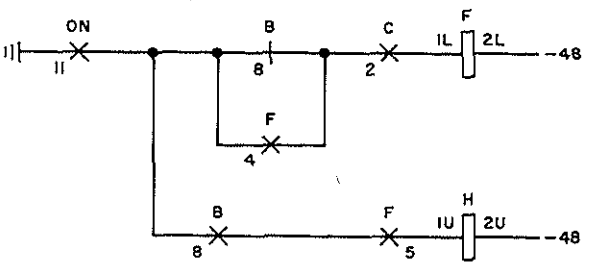

SD-66910 AUX POS CKT

FIG. 16

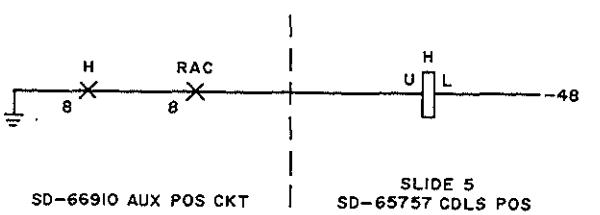

FIG. 17

CLEAR TRUNK ANSWER FROM ANY STATION TROUBLE (WAS REMOTE TRUNK ANSWER) (SD-66910)

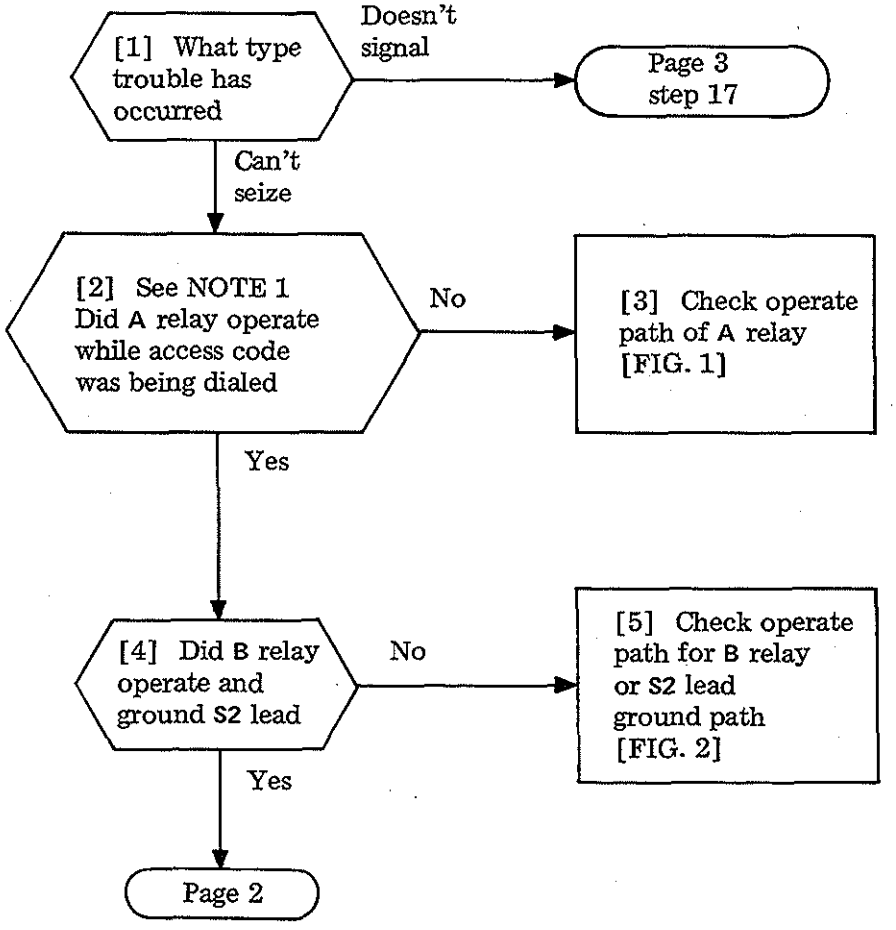

NOTE 1
Relays referred to in this procedure are located on the 3A code call equipment in an external cabinet unless otherwise noted

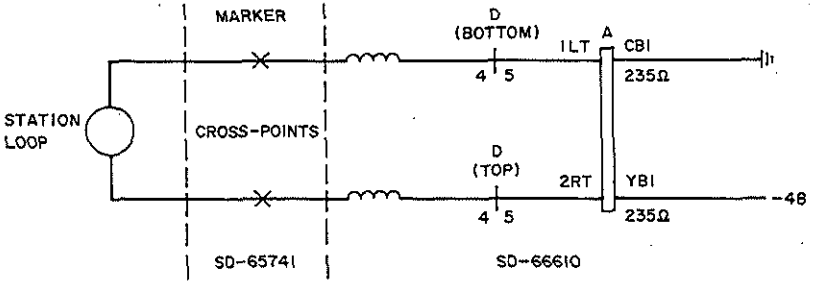

FIG. 1

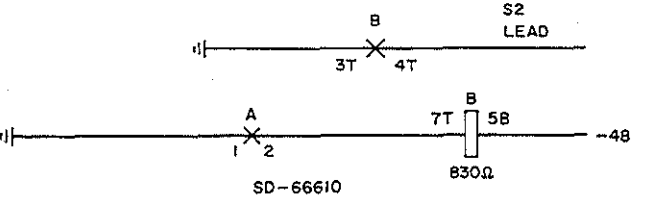

FIG. 2

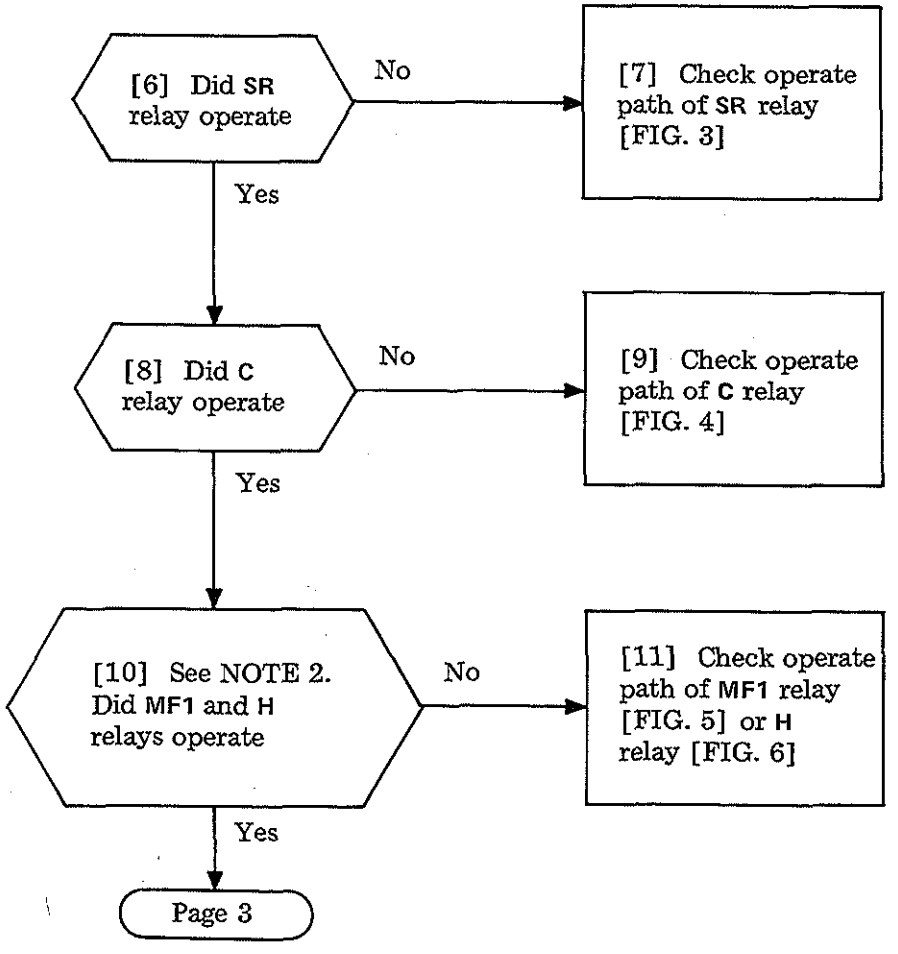

NOTE 2
MF 1 relay is associated only with TOUCH-TONE®. H relay is associated with rotary dial and TOUCH-TONE

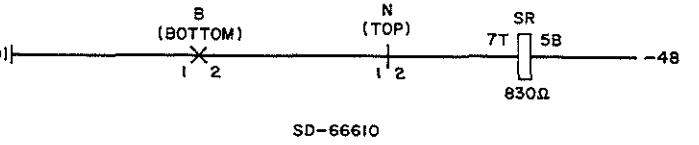

FIG. 3

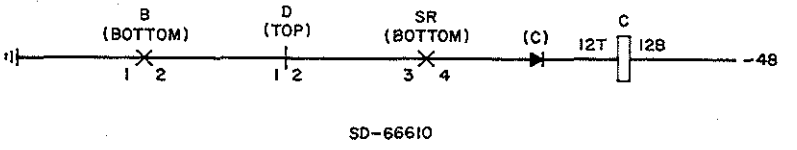

FIG. 4

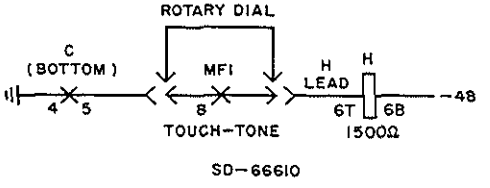

FIG. 6

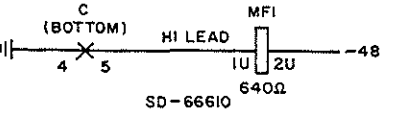

FIG. 5

Issue 1	May 1975
551-100-101	TAP
PAGE 2 of 12	161

CLEAR 3A CODE CALL TROUBLE (SD-66610)

[12] Is equipment TOUCH-TONE or rotary dial

TOUCH-TONE → Page 7 step 42

Rotary ↓

[13] Did RA relay operate

No → [14] Check operate path for RA relay [FIG. 7]

Yes ↓

[15] Did A1 relay operate

No → [16] Check operate path for A1 relay [FIG. 8]

Yes ↓

[17] Did PH relay operate when first pulse released A relay

No → [18] Check operate path for PH relay [FIG. 9]

Yes ↓

Page 4

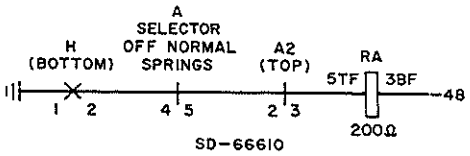

FIG. 7

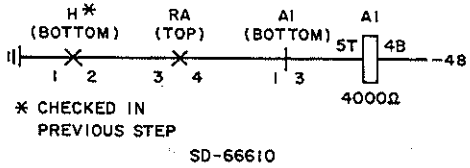

FIG. 8

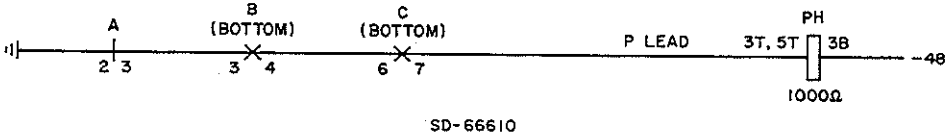

FIG. 9

CLEAR 3A CODE CALL TROUBLE (SD-66610)

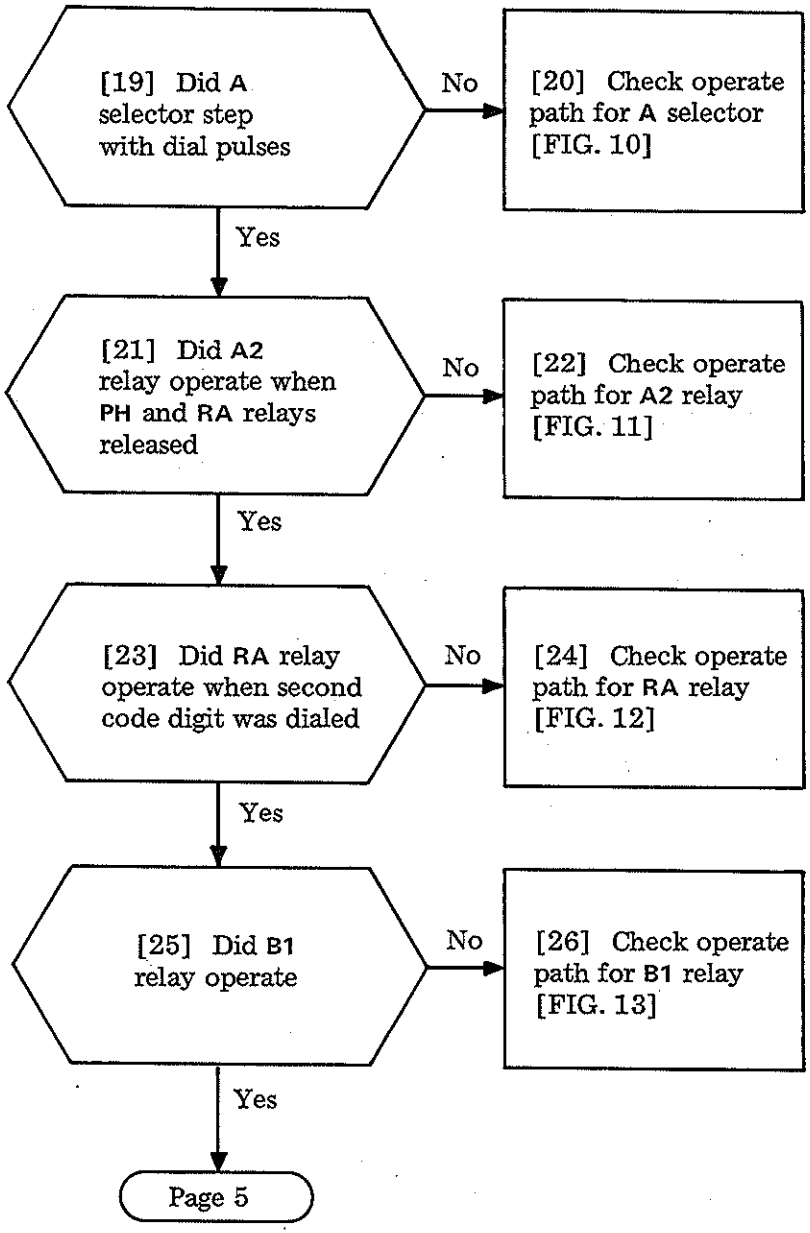

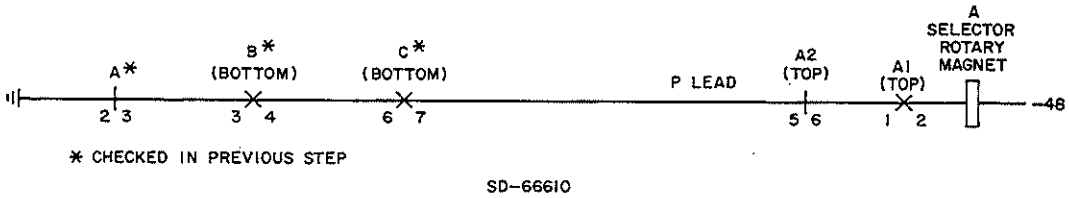

FIG. 10

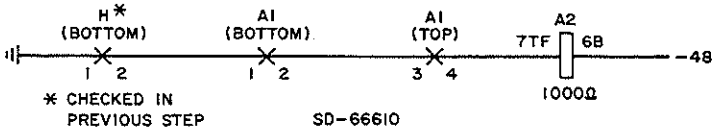

FIG. 11

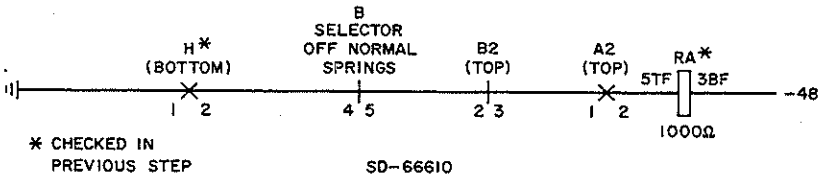

FIG. 12

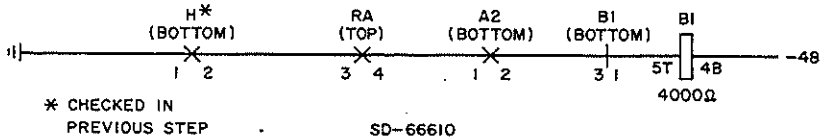

FIG. 13

CLEAR 3A CODE CALL TROUBLE (SD-66610)

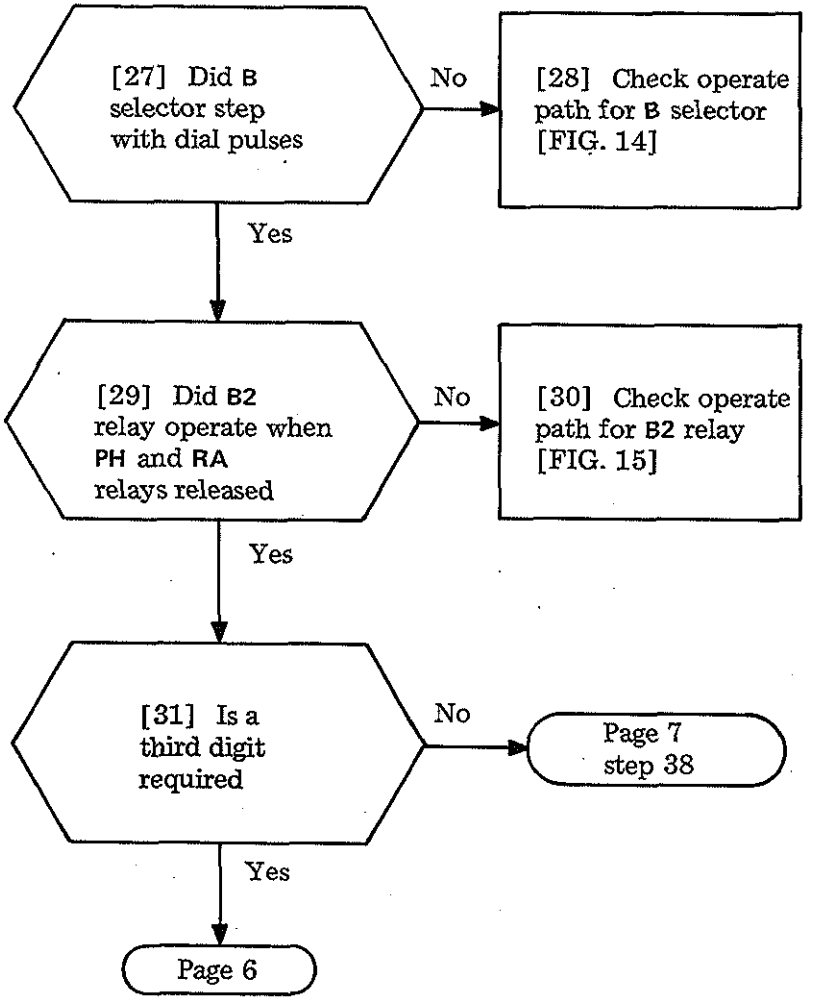

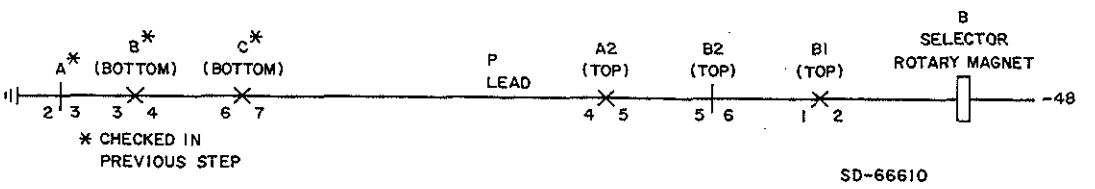

FIG. 14

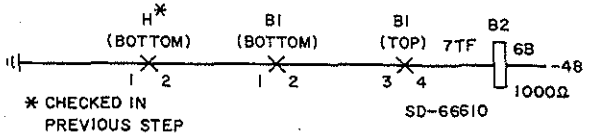

FIG. 15

CLEAR 3A CODE CALL TROUBLE (SD-66610)

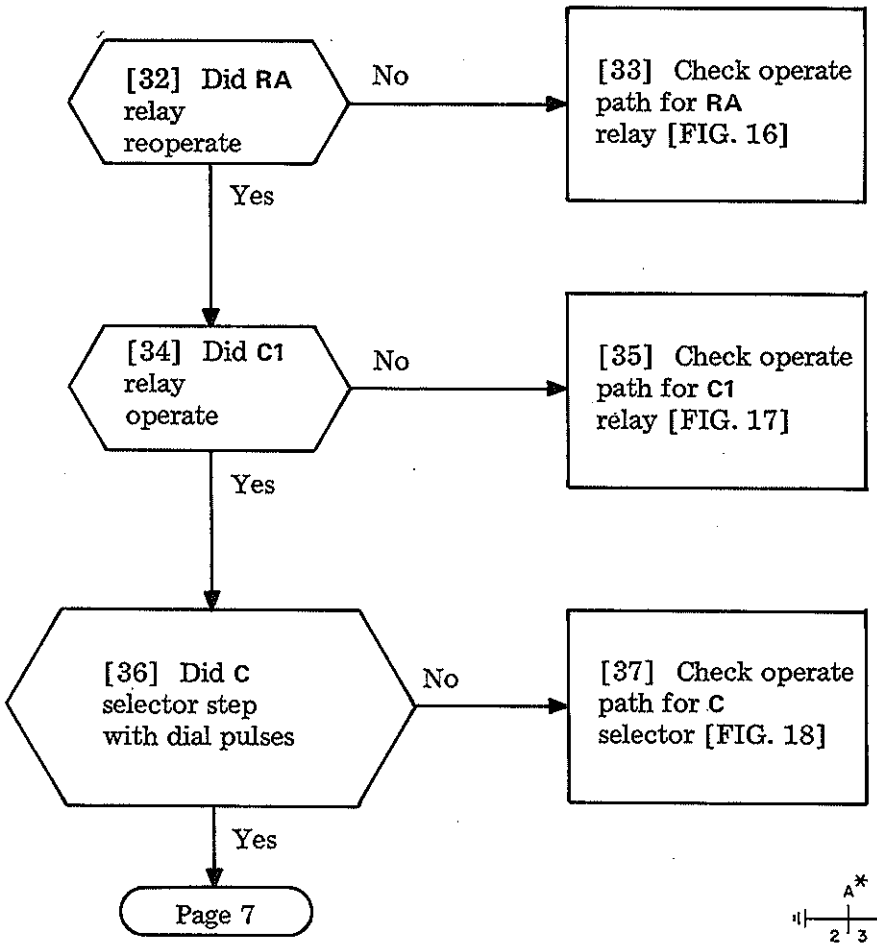

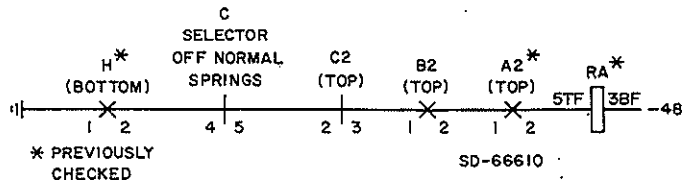

FIG. 16

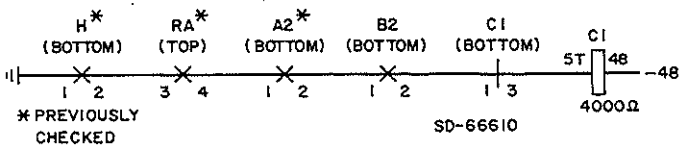

FIG. 17

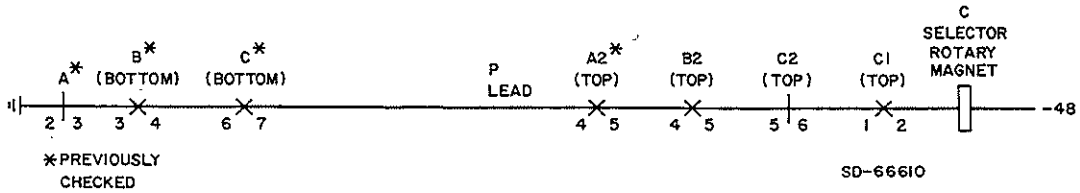

FIG. 18

[38] Did C2 relay operate when RA and PH relay released

No → [39] Check operate path for C2 relay [FIG. 19]

Yes ↓

[40] Did SL relay operate

No → [41] Check operate path for SL relay [FIG. 20]

Yes → Page 11

[42] Did STR relay operate when first digit was dialed

No → [43] Check operate path for STR relay [FIG. 21]

Yes ↓

[44] Did MA1 relay operate

No → [45] Check operate path for MA1 relay [FIG. 22]

Yes → Page 8

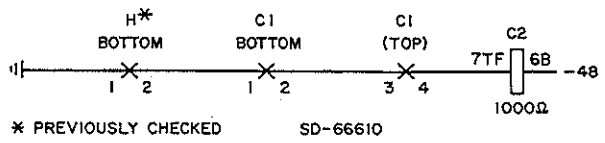

FIG. 19

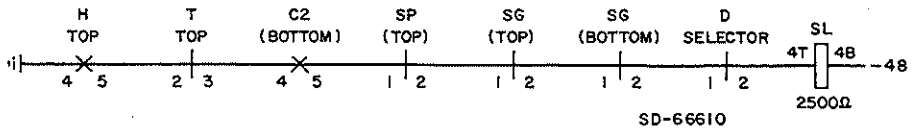

FIG. 20

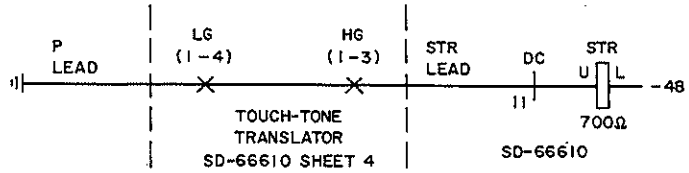

FIG. 21

FIG. 22

CLEAR 3A CODE CALL TROUBLE (SD-66610)

[46] Did STRA relay operate

No → [47] Check operate path for STRA relay [FIG. 23]

Yes ↓

[48] Did CSA (1–5) relay operate for digit dialed

No → [49] Check operate path for CSA (1–5) relay [FIG. 24]

Yes ↓

[50] Did MA2 relay operate when STR relay released

No → [51] Check operate path for MA2 relay [FIG. 25]

Yes ↓

[52] Did MB1 relay operate when STR relay reoperated

No → [53] Check operate path for MB1 relay [FIG. 26]

Yes ↓

Page 9

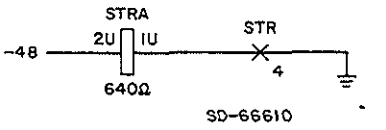

FIG. 23

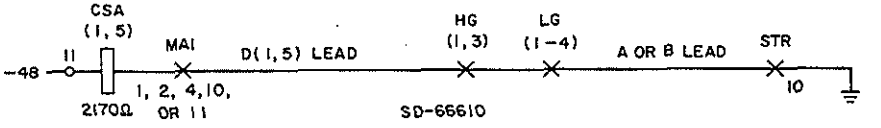

FIG. 24

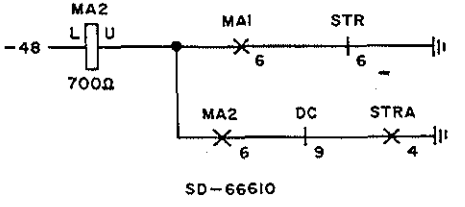

FIG. 25

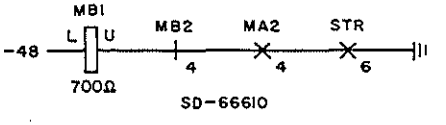

FIG. 26

CLEAR 3A CODE CALL TROUBLE (SD-66610)

[54] Did **CSB (1, 5)** relay operate

No → [55] Check operate path for **CSB (1, 5)** relay [FIG. 27]

Yes ↓

[56] Did **MB2** relay operate when **STR** relay released

No → [57] Check operate path for **MB2** relay [FIG. 28]

Yes ↓

[58] Is a third digit required

No → Page 10 step 76

Yes ↓

[59] Dial third digits as required

→ [60] Did **MC1** relay operate when **STR** relay reoperated

No → [61] Check operate path for **MC1** relay [FIG. 29]

Yes ↓

Page 10

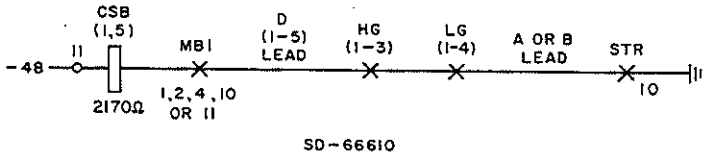

FIG. 27

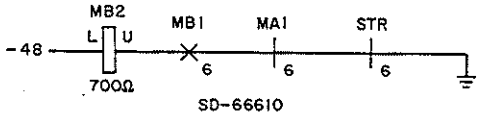

FIG. 28

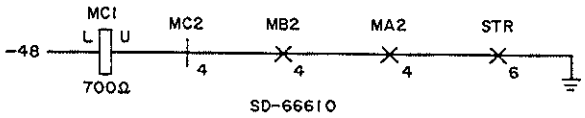

FIG. 29

CLEAR 3A CODE CALL TROUBLE (SD-66610)

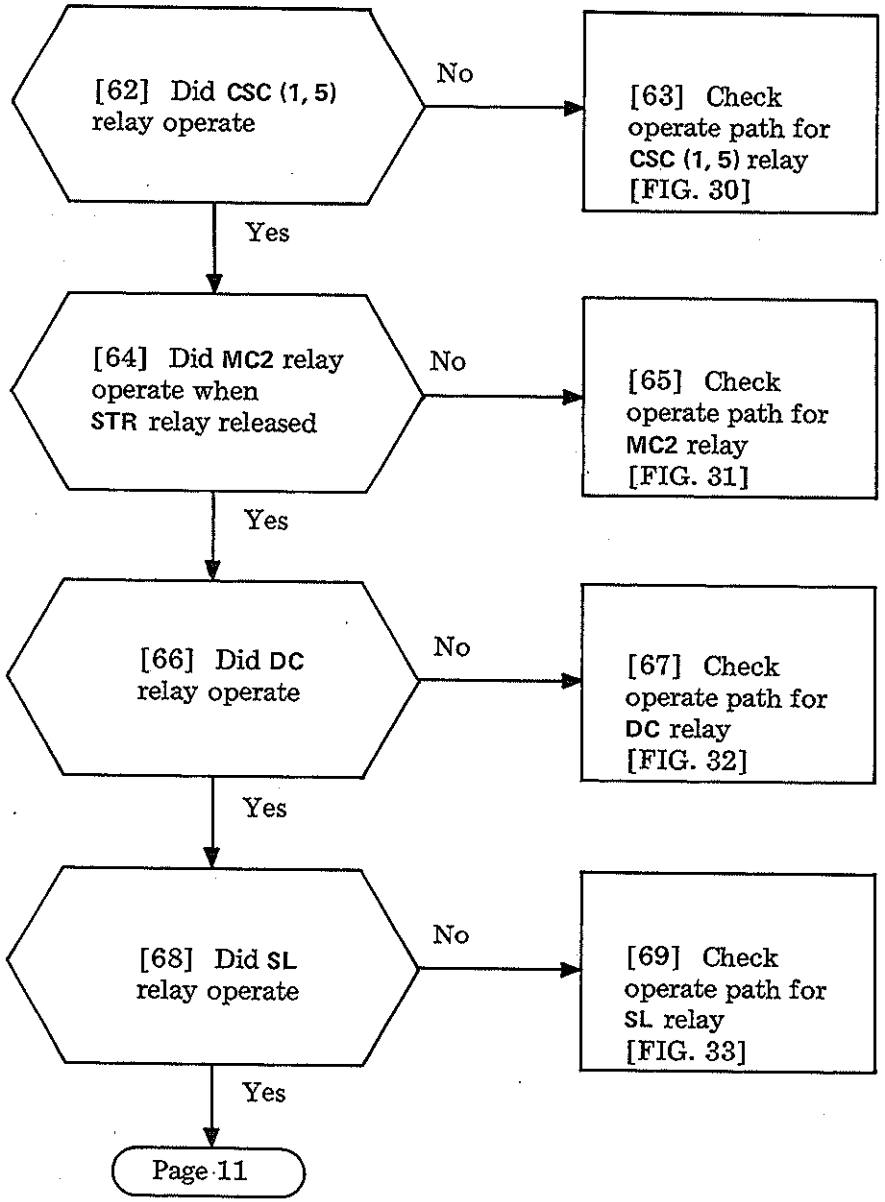

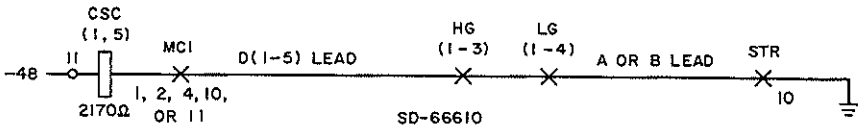

FIG. 30

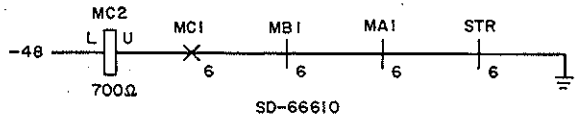

FIG. 31

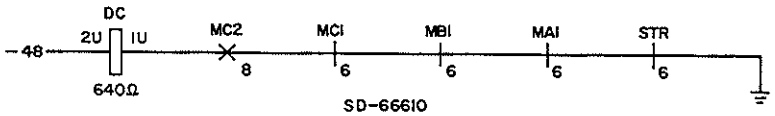

FIG. 32

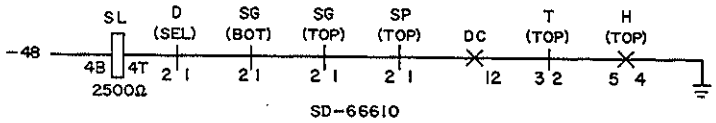

FIG. 33

CLEAR 3A CODE CALL TROUBLE (SD-66610)

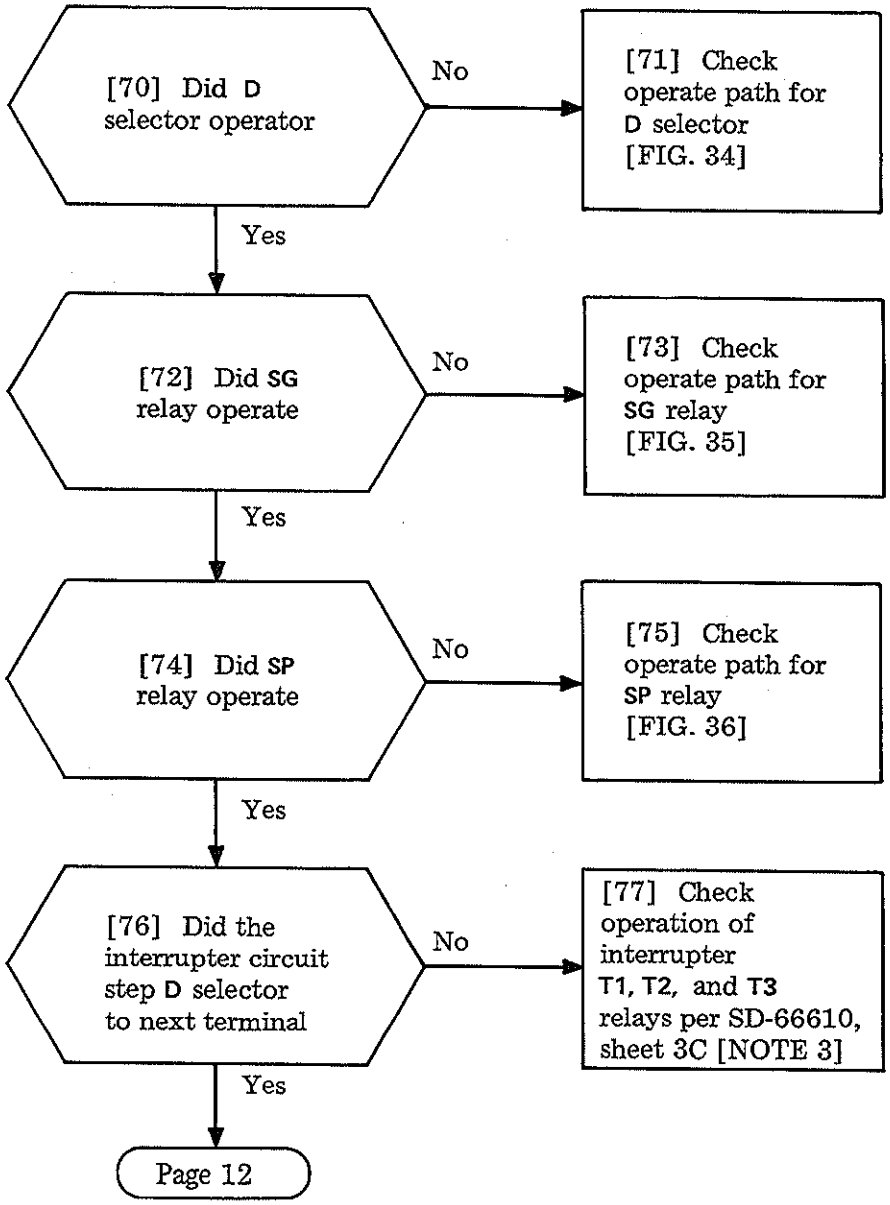

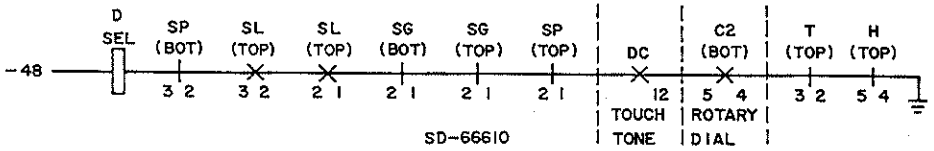

FIG. 34

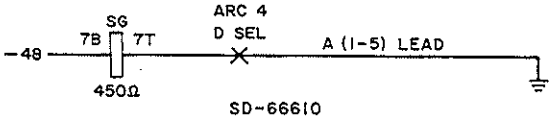

FIG. 35

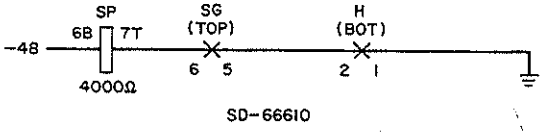

FIG. 36

NOTE 3
If slower pulsing rate is desired, FIG. B will be required in addition to FIG. 3 on SD-66610

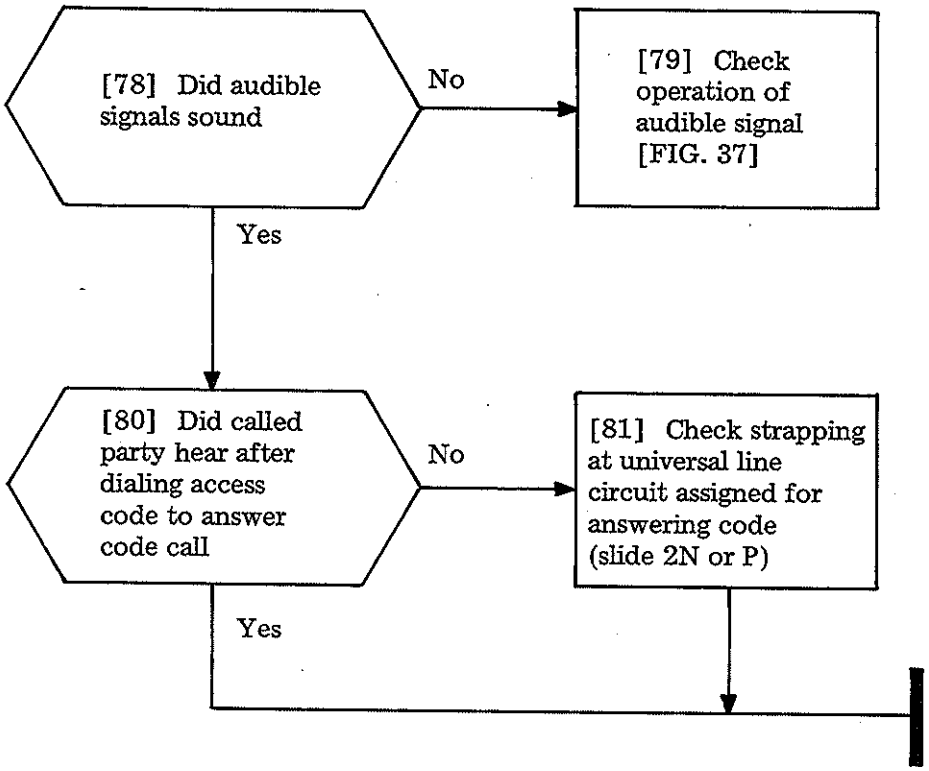

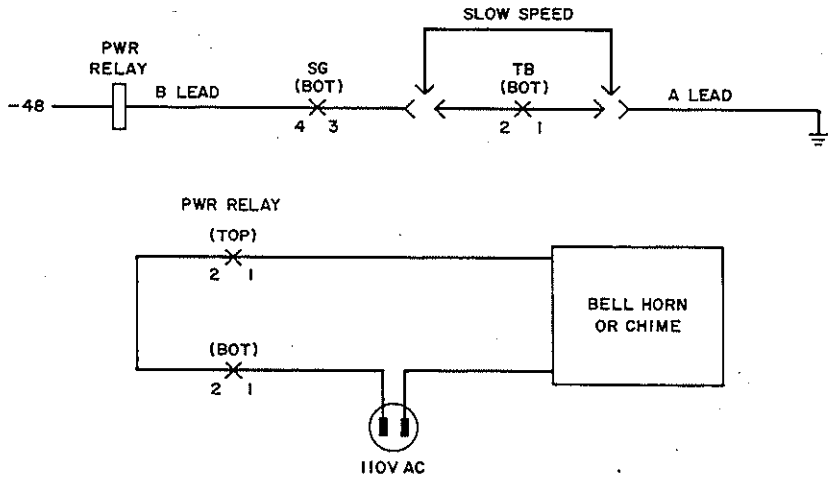

FIG. 37

CLEAR 3A CODE CALL TROUBLE (SD-66610)

[1] Does trouble only occur on CO TRK calls

Yes → [2] Is trouble on manual or 2-way dial CO TRK [NOTE 1]

No → Page 3

Manual → Page 2

2-Way dial → [3] Check SE(0-9) relay in external cabinet of CO TRK involved for operation

[4] Did SE (0-9) relay operate and connect T and R leads of cord circuit to CO TRK [FIG. 1]

Yes → TAP-152

No → [5] Check coil and clean contacts 4B, 5B, 8B, and 9B of SE (0-9) relay [FIG. 1]

NOTE 1
Manual CO TRKs (SD-65665) are plug-in units on the 556A switchboard and 2-way dial CO TRKs (SD-65752) are extended from 756A switching equipment

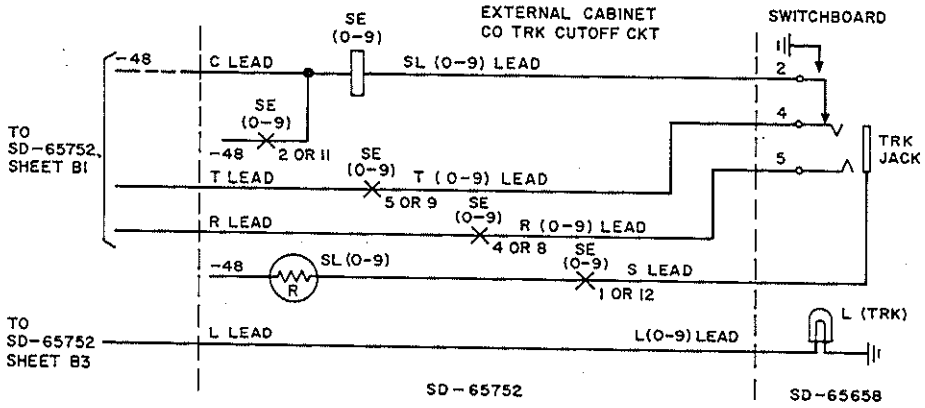

FIG. 1

CLEAR 556A SWITCHBOARD TROUBLE

[6] Is trouble on incoming or outgoing calls

Both or outgoing only → [13] Check trunk jack springs and T and R leads at cross-connect terminal [NOTE 2]

Incoming only ↓

[7] Did R relay operate

No → [9] Check operate path of R relay and clear trouble [FIG. 2 and NOTE 2]

Yes ↓

[8] Did R relay lock operated

Yes → [11] Is talk path good to central office

No → [13]

No ↓

[10] Check secondary winding of R relay, contacts 1T and 2T of R relay [FIG. 2], and jack contacts. Clear trouble [FIG. 2 and NOTE 2]

Yes ↓

[12] Check for intermittent trouble caused by dirty jack contacts, dirty cord plug, or loose connection at cross-connect terminal, etc

NOTE 2
When trouble cannot be cleared (bad relay winding, etc), replace trunk plug-in unit

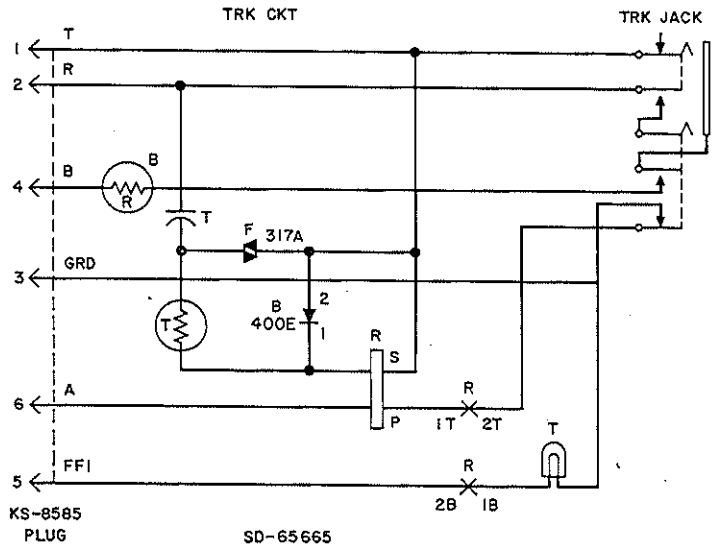

FIG. 2

Issue 1	May 1975
551-100-101	TAP
Page 2 of 5	162

CLEAR 556A SWITCHBOARD TROUBLE

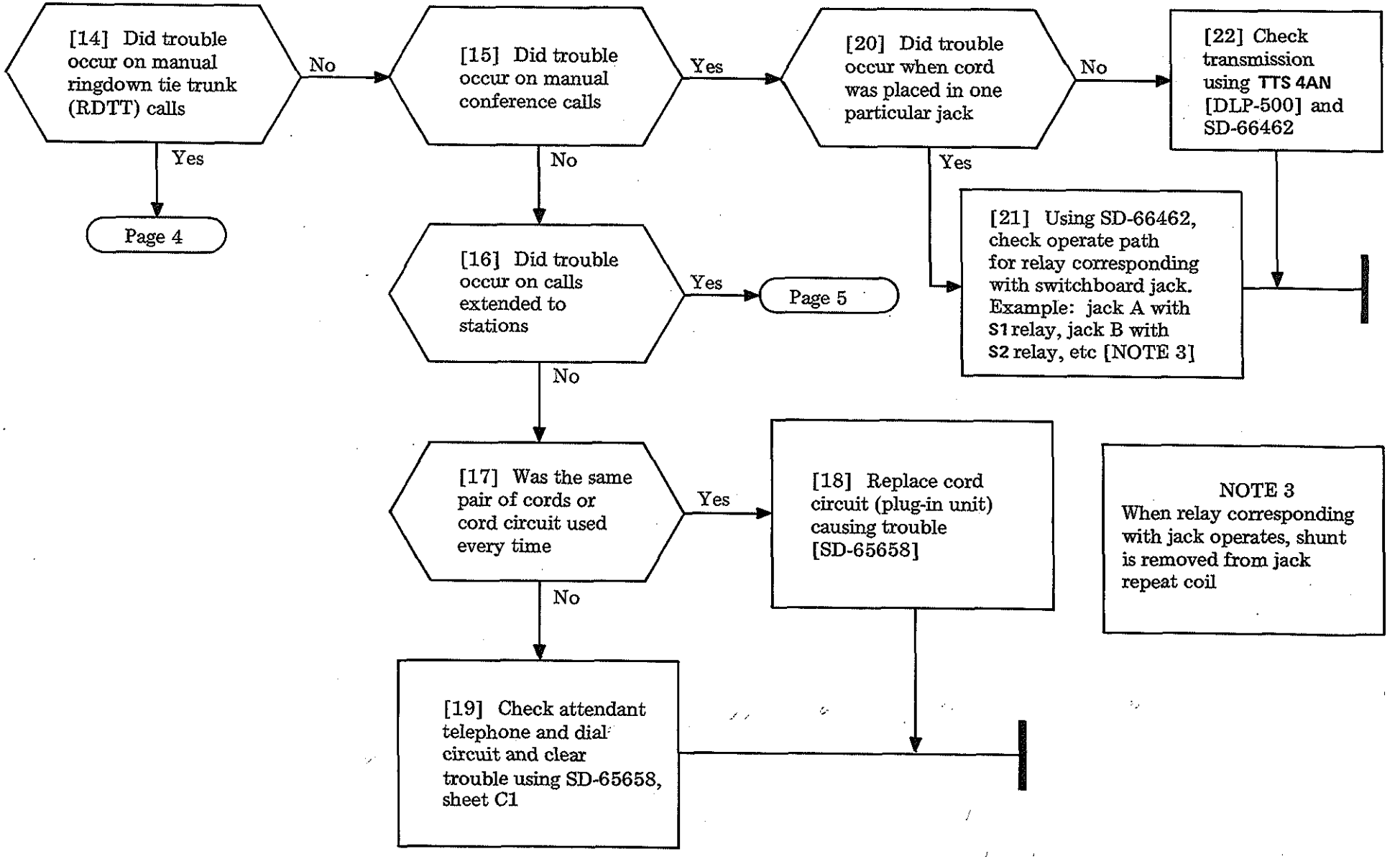
[14] Did trouble occur on manual ringdown tie trunk (RDTT) calls
Yes
Page 4
No
[15] Did trouble occur on manual conference calls
Yes
No
[16] Did trouble occur on calls extended to stations
Yes
Page 5
No
[17] Was the same pair of cords or cord circuit used every time
Yes
[18] Replace cord circuit (plug-in unit) causing trouble [SD-65658]
No
[19] Check attendant telephone and dial circuit and clear trouble using SD-65658, sheet C1
[20] Did trouble occur when cord was placed in one particular jack
No
[22] Check transmission using TTS 4AN [DLP-500] and SD-66462
Yes
[21] Using SD-66462, check operate path for relay corresponding with switchboard jack. Example: jack A with S1 relay, jack B with S2 relay, etc [NOTE 3]
NOTE 3
When relay corresponding with jack operates, shunt is removed from jack repeat coil

[23] Is trouble on incoming or outgoing calls

Incoming only

Outgoing only or both

[24] Did R1 relay (external cabinet) operate after R relay operates

No

[25] Check operate path of R1 relay [FIG. 3]

Yes

[26] Did L lamp light

No

[27] Check operate path of L relay and L lamp [FIG. 4]

Yes

[28] Did L relay release when cord is inserted in RDTT jack

No

[29] Check operate path of CO relay [FIG. 5]

Yes

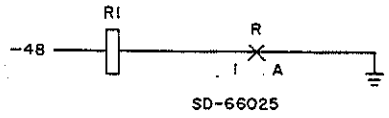

FIG. 3

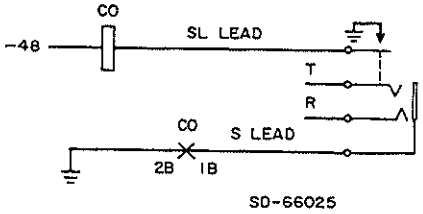

FIG. 5

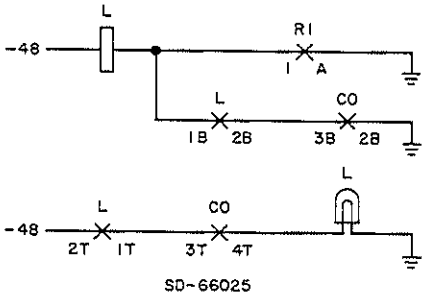

FIG. 4

CLEAR 556A SWITCHBOARD TROUBLE

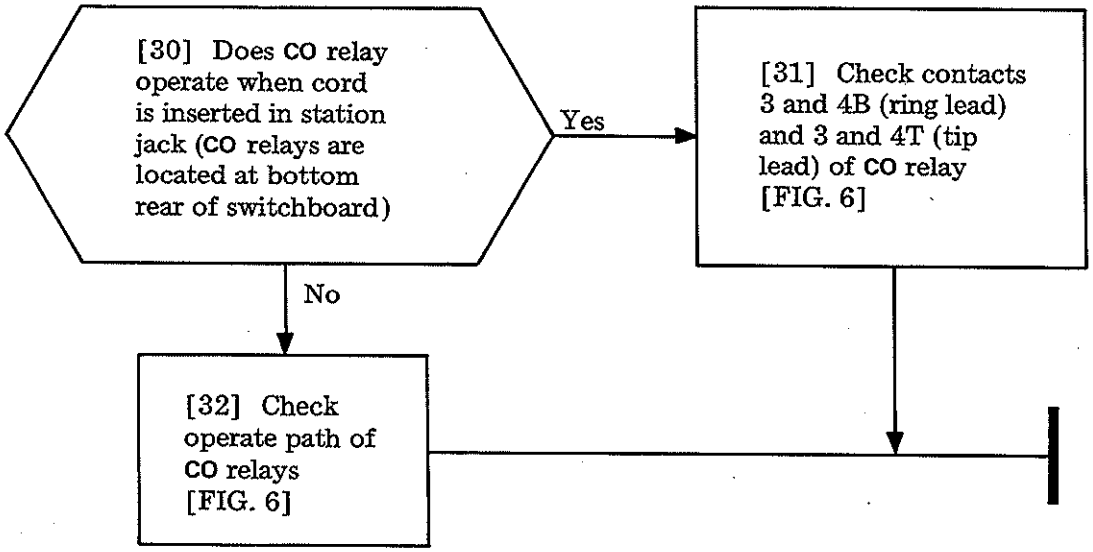

TABLE A	
CO RELAY	MON 2–7 CONTACTS
CO-0	1
CO-1	2
CO-2	3
CO-3	4
CO-4	5
CO-5	6
CO-6	7
CO-7	8
CO-8	9
CO-9	10

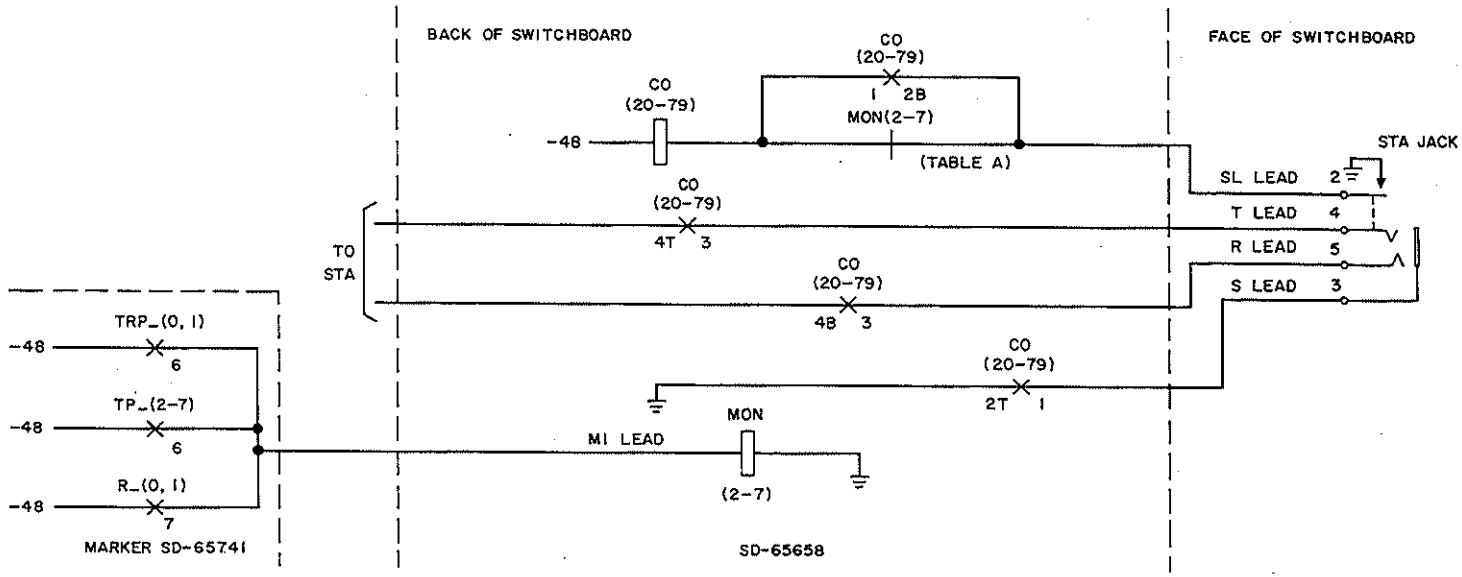

FIG. 6

GENERAL

The trouble analysis procedures in this volume generally assume:

- The 756A PBX was installed and tested properly and all faults cleared at that time
- There is *one* case of trouble
- Marker and dial pulse registers are without trouble.

A general knowledge of how the system functions, as well as how to remove equipment from service, will aid in using these procedures.

The straight bare wires on the apparatus side of each crossbar switch (banjo wires) are *physically connected at all times* on a wire-for-wire basis to *all* other crossbar switches within the 756A PBX system. These form the 16 three-wire links between switches [FIG. 1].

Each circuit (station, CO trunk, dial pulse register, etc) is hard-wired to crosspoints of a vertical(s) (T, R, S leads) on a crossbar switch. The marker operates the line hold magnet(s) to close the crosspoints of the calling and called circuits, linking them together. Some calls (eg, station-to-station) require two different 3-wire links be joined (via junctor) to complete a call.

If the system is furnished with a make-busy, busy-display unit, a circuit may be removed from service by operating the associated key. Without the make-busy, busy-display feature, refer to method shown in TOP procedure and/or section six of the circuit description for the circuit(s) involved.

When using the trouble analysis procedures (TAPs) in this volume, it is recommended that:

- The time-out feature of each dial pulse register is disabled while testing (block TMO relay of each register nonoperated)
- When referencing from one TAP to an internal page and/or step of another TAP, read the summary statement of the second TAP, *regardless of the point of entry.*

A good troubleshooter will think of questions (and/or ask customer) that can narrow the trouble area:

Example 1—

Report: Attendant can't DSS station 42.

Question: Does DSS lamp 42 light steadily after attendant operates DSS key 42.

Conclusion: If answer is *yes*, call was completed through the 756A PBX, and the line hold magnet associated with station 42 operated to light DSS lamp 42. Thus the failure is probably with station wiring or equipment rather than the PBX. If answer is *no*, refer to TIL-095 to locate the proper TAP to use to locate the fault.

Example 2—

Report: Station 38 can't be called.

Question: After dialing station 38, at crossbar switch 3 (slide 2), is line hold magnet 8 operated?

Conclusion: If answer is *yes*, call has been completed through the 756A PBX. Fault is probably in station wiring or equipment. If troubleshooter gets PBX dial tone at station 38, station wiring is probably good, and the fault may be in the ringer circuit.
If the answer is *no*, refer to TIL-095 to locate the proper TAP to use to locate the fault.

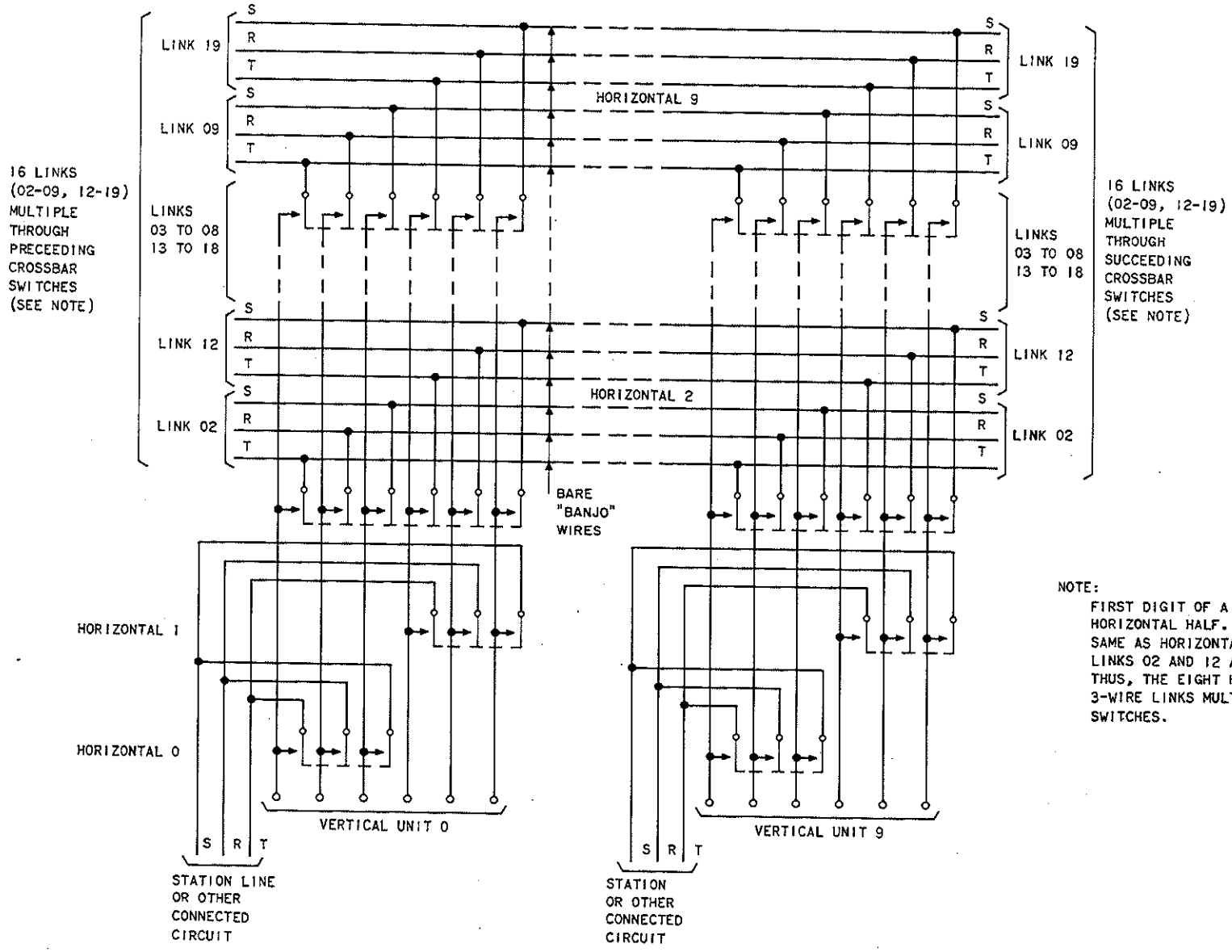

NOTE:
FIRST DIGIT OF A LINK NUMBER (0, 1) INDICATES HORIZONTAL HALF. LAST DIGIT OF LINK NUMBER IS SAME AS HORIZONTAL (LEVEL) NUMBER. FOR EXAMPLE, LINKS 02 AND 12 ARE EACH HALF OF HORIZONTAL 2. THUS, THE EIGHT HORIZONTALS (2-9) PROVIDE 16 3-WIRE LINKS MULTIPLING THROUGH ALL CROSSBAR SWITCHES.

FIG. 1 — Crossbar Switch (Typical) — Showing How 10 Verticals Gain Access to Any One of 16 Links

Assumed alarm did not activate:

7. Remove paper insulators from contacts of one relay pair at a time.

8. Originate calls through marker as required until relay pair causing trouble is located.

9. Turn to G-sheet of SD-65741-01 showing operate path of relay pair in trouble.

10. Locate trouble using same method as above.

Assume after steps 1 and 2 alarm does not activate:

11. Remove paper insulators from half of those paths opened.

12. Originate calls through marker.

Assume alarm activates:

13. Place insulators on contacts of one relay at a time (those removed in step 11).

14. Originate calls as required until relay pair causing trouble is located.

Assume after step 12 alarm did not activate:

15. Remove paper insulators from one relay pair at a time.

16. Originate calls as required until relay pair causing trouble is located.

Clear trouble:

17. Turn to G-sheet of SD-65741-01 showing operate path of relay pair in trouble and use isolation method to locate trouble.

Carefully remove all contact paper insulators and replace relay covers after clearing troubles. Restore all equipment to normal.

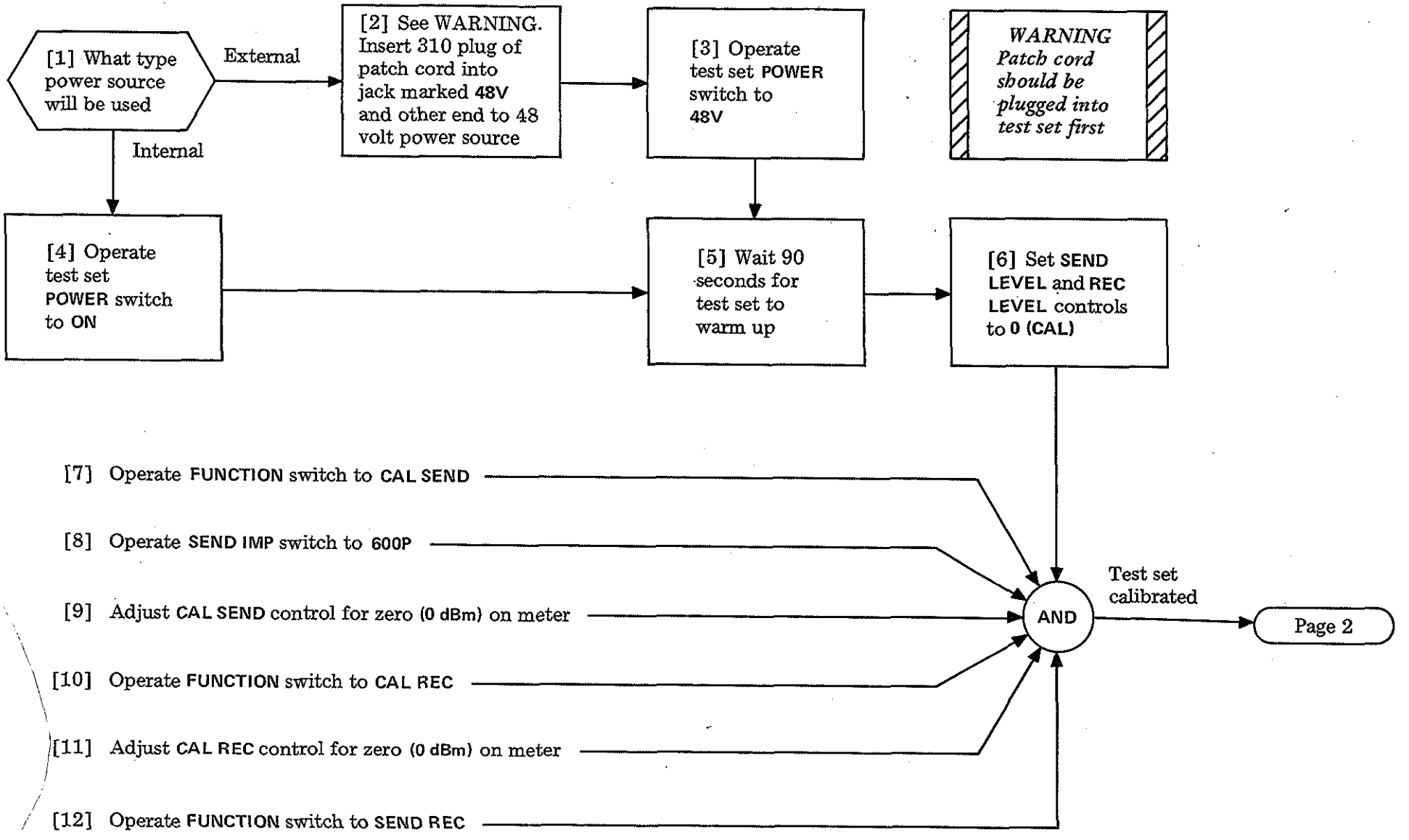

MEASURE TRANSMISSION LEVEL USING TTS 4AN

Issue 1	May 1975
551-100-101	DLP
PAGE 1 of 4	500

[13] Connect 52- (or 53)-type headset to **TELSET** jack

[14] Set **SEND FREQ** control to desired frequency (normally 1000 Hz)

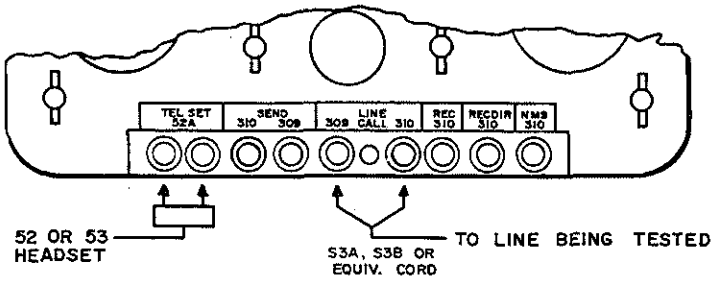

FIG. 1—Jack Field for TTS 4AN

[15] Connect line to be tested per FIG. 1

[16] Operate **LINE** key to **TALK** → Talk path established to participating location [NOTE 1]

[17] Set **SEND LEVEL** control as desired for circuit order

[18] Set **SEND IMP** control to desired impedance per circuit layout record

[19] Operate **LINE** key to **SEND**

[20] Allow sufficient time for participating location to observe and record transmission results (meter reading). Operate **LINE** key to **TALK** → Transmission level reported OK

AND → Transmit level tests OK → Page 3

NOTE 1
Notify participating location of your readiness to begin tests.

MEASURE TRANSMISSION LEVEL USING TTS 4AN

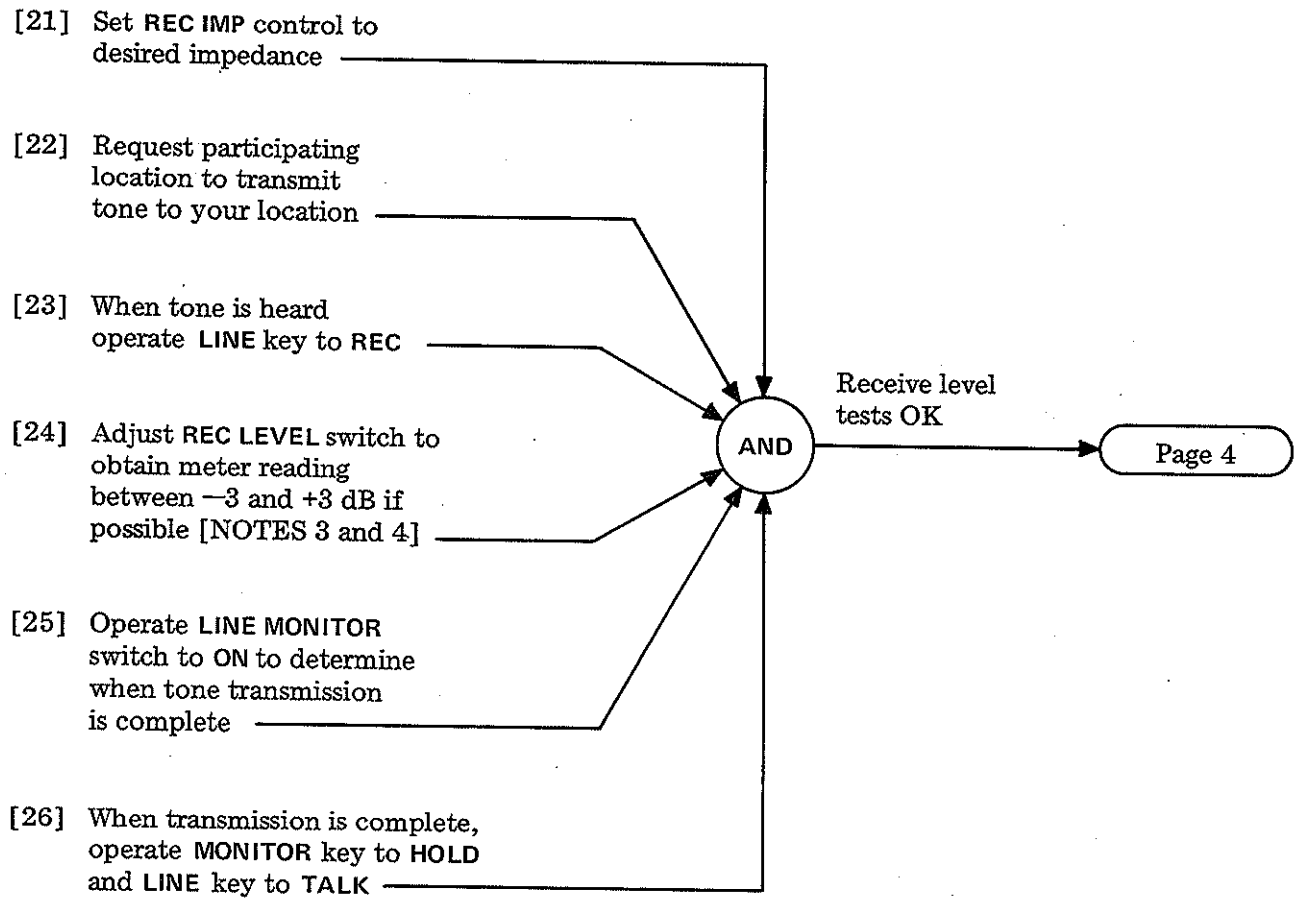

NOTES

3. DBM level will be the sum of REC LEVEL switch and meter reading. Example:
   REC LEVEL + meter = level
   +7 +2 = +9
4. High or low level readings could indicate trouble with cable pair such as long cable pair, unbalanced pair, etc. Refer these indications to transmission engineering or per local procedures

MEASURE TRANSMISSION LEVEL USING TTS 4AN

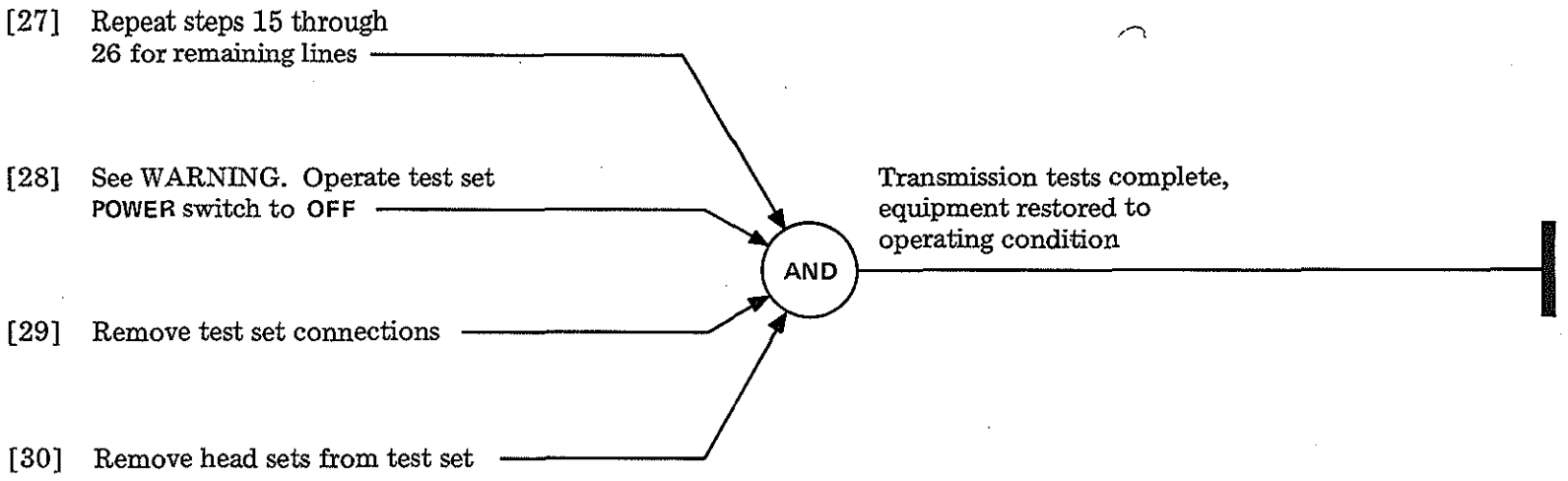

WARNING

If test set is operating from an external power source: operate POWER switch to OFF, remove cord from external power source, then remove cord from test set jack.

[3] Make test adapter [FIG. 2] for extending terminals of J58829A, L57 cable connectors 3 and 4 using equipment listed in TABLE B

[4] Mount **251C** terminal strip on a backboard

AND

Test equipment prepared

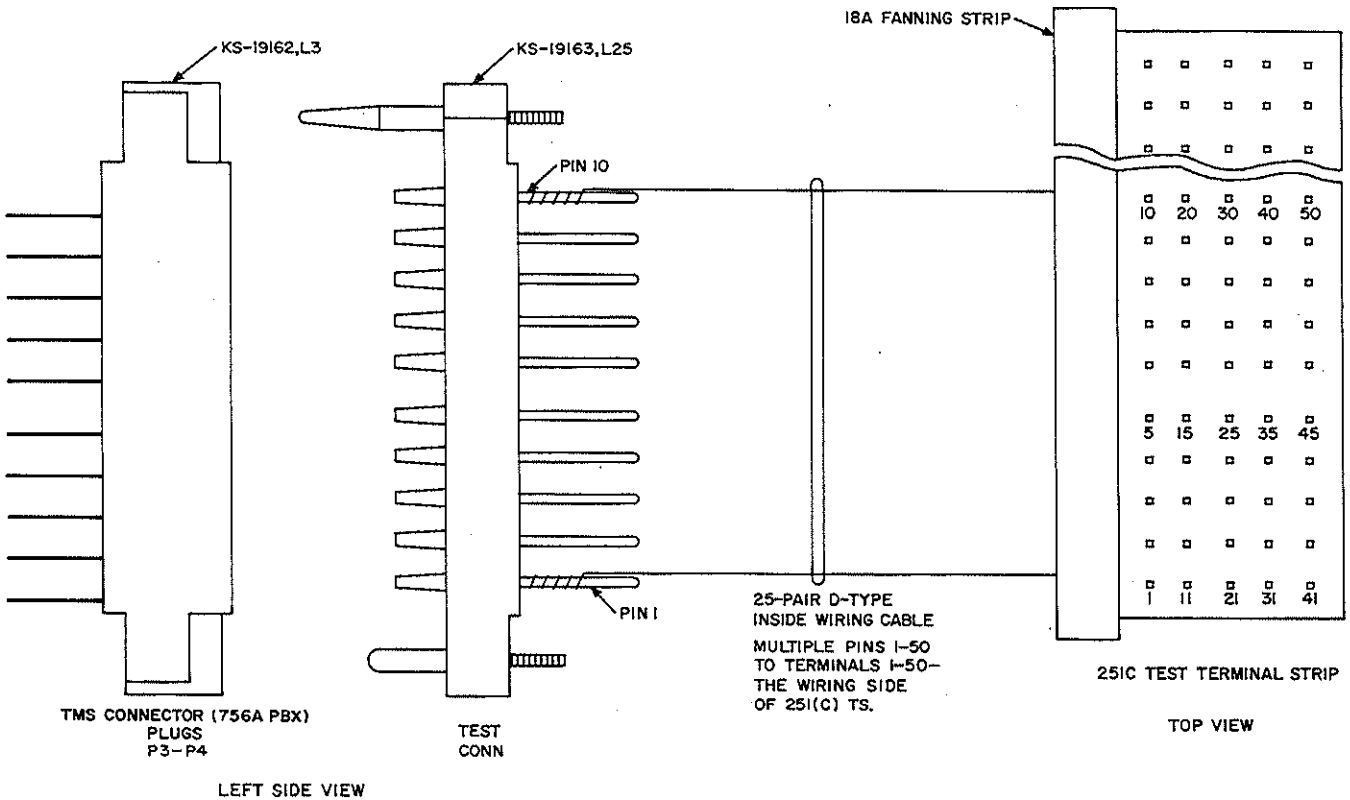

FIG. 2

TABLE B	
EQUIPMENT REQUIRED	QUANTITY
Terminal Strip 251C [NOTE 1]	1
Connector KS-19163, L25	1
Fanning Strip 18A	1
Cable, 25-pr, D-inside wiring	10 ft

NOTE 1
251C TS terminal numbers are the same as connector KS-19163, L25 pin number

BUILD TEST ADAPTER AND LAMP INDICATOR TO TEST TRAFFIC MEASUREMENT (TMS 1A) FEATURE

[1] Make test lamp indicator [FIG. 1] using equipment listed in TABLE A

[2] Mount test lamp indicator on a backboard

AND

Page 2

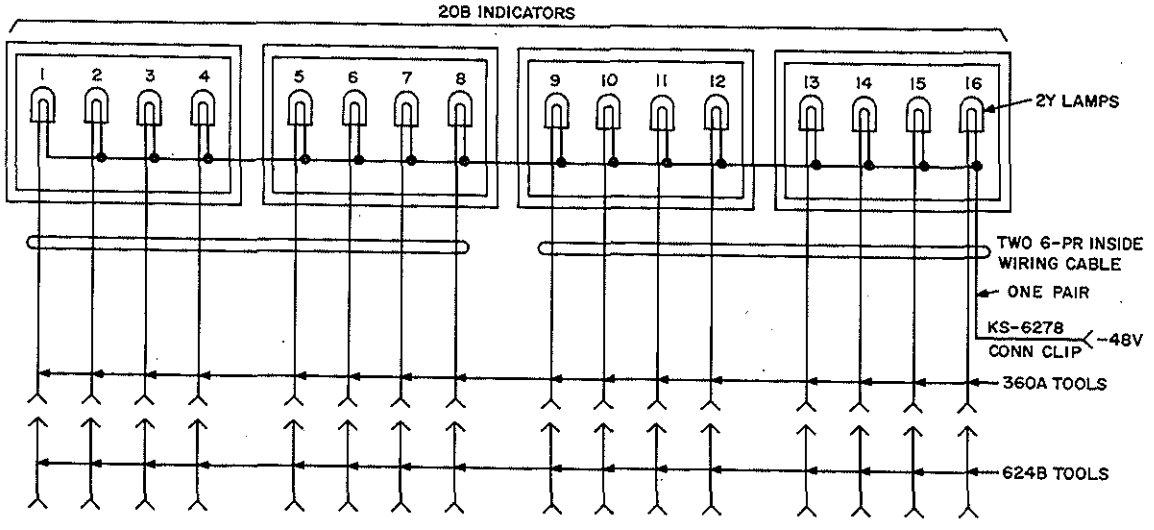

FIG. 1

TABLE A	
EQUIPMENT REQUIRED	QUANTITY
Lamp Indicators 20B-Type	4
Lamps 2Y	16
Connecting Clip KS-6278	1
Tool 360A, B, or C	16
Tool 624B	16
Cable 6 pr, D-type inside wiring	12 ft (2 pieces, 6 ft long)

BUILD TEST ADAPTER AND LAMP INDICATOR TO TEST TRAFFIC MEASUREMENT (TMS 1A) FEATURE