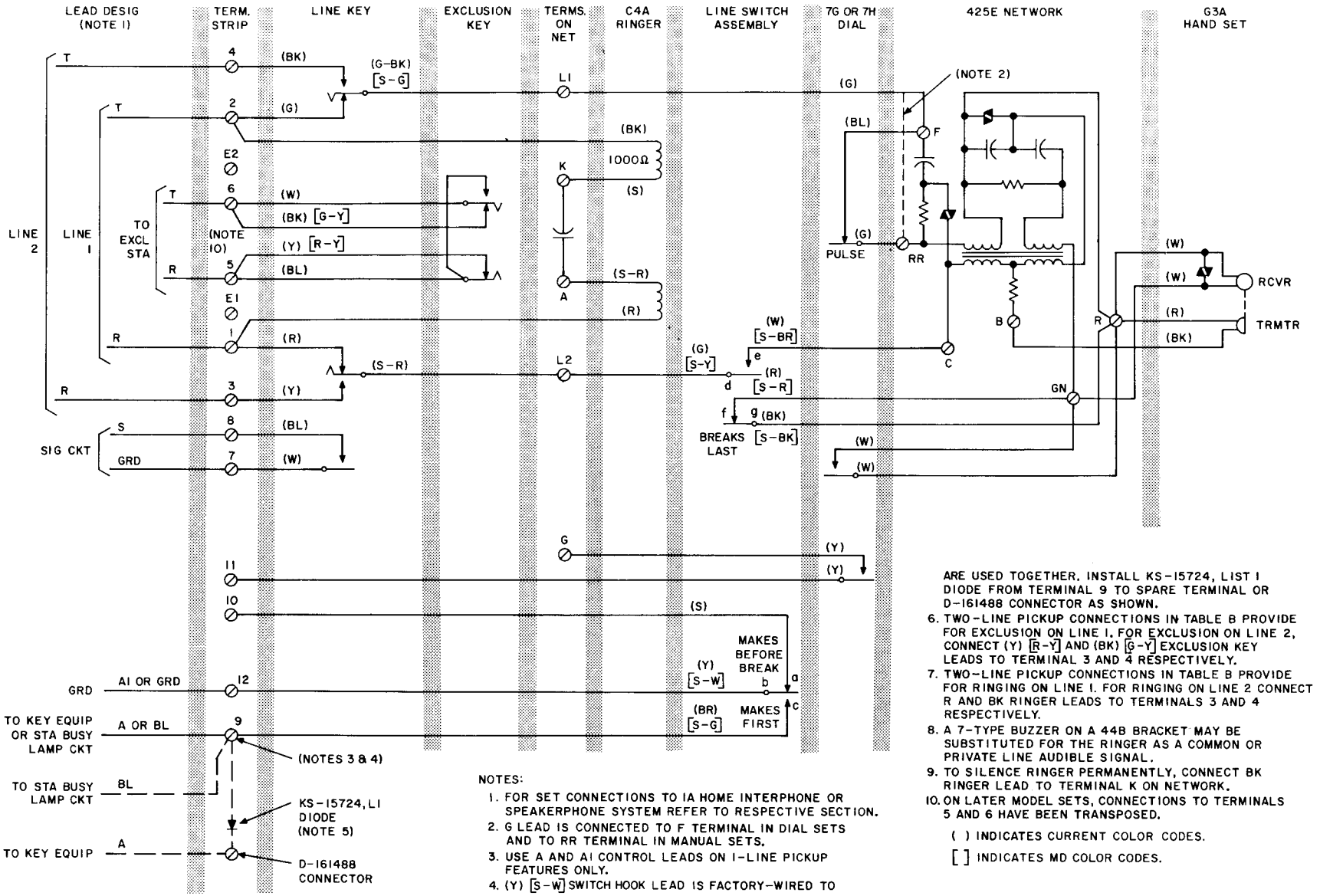

NOTES:

1. FOR SET CONNECTIONS TO 1A HOME INTERPHONE OR SPEAKERPHONE SYSTEM REFER TO RESPECTIVE SECTION.
2. G LEAD IS CONNECTED TO F TERMINAL IN DIAL SETS AND TO RR TERMINAL IN MANUAL SETS.
3. USE A AND A1 CONTROL LEADS ON 1-LINE PICKUP FEATURES ONLY.
4. (Y) [S-W] SWITCH HOOK LEAD IS FACTORY-WIRED TO TERMINAL 9. TRANSFER THIS LEAD FROM TERMINAL 9 TO TERMINAL 12, AS REQUIRED.
5. USE DOTTED-LINE CONNECTIONS WHEN A AND A1 CONTROL LEADS AND STATION BUSY LAMP CIRCUIT ARE USED TOGETHER. INSTALL KS-15724, LIST 1 DIODE FROM TERMINAL 9 TO SPARE TERMINAL OR D-161488 CONNECTOR AS SHOWN.
6. TWO-LINE PICKUP CONNECTIONS IN TABLE B PROVIDE FOR EXCLUSION ON LINE 1. FOR EXCLUSION ON LINE 2, CONNECT (Y) [R-Y] AND (BK) [G-Y] EXCLUSION KEY LEADS TO TERMINAL 3 AND 4 RESPECTIVELY.
7. TWO-LINE PICKUP CONNECTIONS IN TABLE B PROVIDE FOR RINGING ON LINE 1. FOR RINGING ON LINE 2 CONNECT R AND BK RINGER LEADS TO TERMINALS 3 AND 4 RESPECTIVELY.
8. A 7-TYPE BUZZER ON A 44B BRACKET MAY BE SUBSTITUTED FOR THE RINGER AS A COMMON OR PRIVATE LINE AUDIBLE SIGNAL.
9. TO SILENCE RINGER PERMANENTLY, CONNECT BK RINGER LEAD TO TERMINAL K ON NETWORK.
10. ON LATER MODEL SETS, CONNECTIONS TO TERMINALS 5 AND 6 HAVE BEEN TRANSPOSED.

( ) INDICATES CURRENT COLOR CODES.

[ ] INDICATES MD COLOR CODES.

558C and D Telephone Sets, 2-Line Pickup, Signaling, Exclusion, and Control Leads