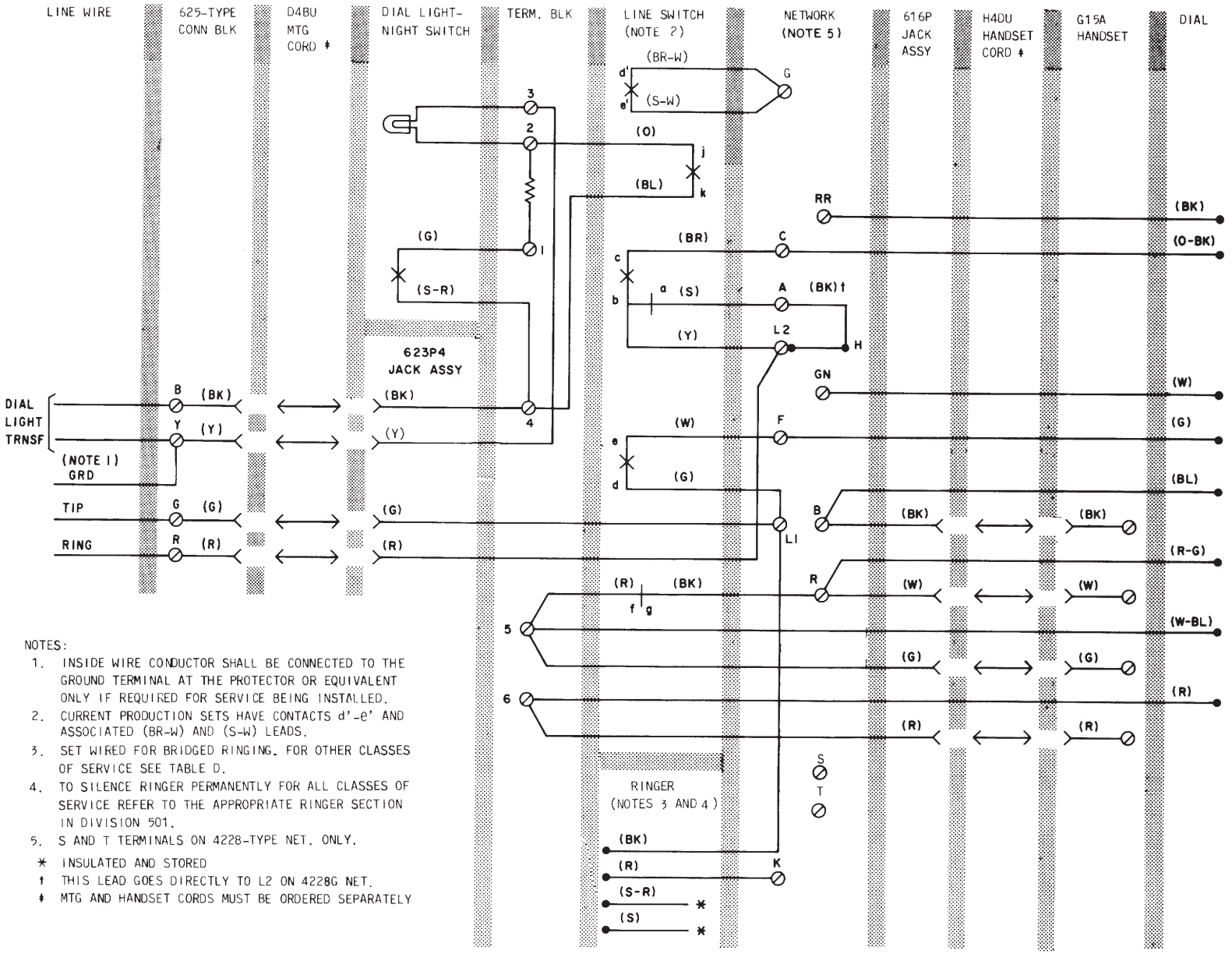

NOTES:

1. INSIDE WIRE CONDUCTOR SHALL BE CONNECTED TO THE GROUND TERMINAL AT THE PROTECTOR OR EQUIVALENT ONLY IF REQUIRED FOR SERVICE BEING INSTALLED.
2. CURRENT PRODUCTION SETS HAVE CONTACTS d'-e' AND ASSOCIATED (BR-W) AND (S-W) LEADS.
3. SET WIRED FOR BRIDGED RINGING. FOR OTHER CLASSES OF SERVICE SEE TABLE D.
4. TO SILENCE RINGER PERMANENTLY FOR ALL CLASSES OF SERVICE REFER TO THE APPROPRIATE RINGER SECTION IN DIVISION 501.
5. S AND T TERMINALS ON 4228-TYPE NET. ONLY.

* INSULATED AND STORED

† THIS LEAD GOES DIRECTLY TO L2 ON 4228G NET.

‡ MTG AND HANDSET CORDS MUST BE ORDERED SEPARATELY

2702BM Telephone Set, Connections