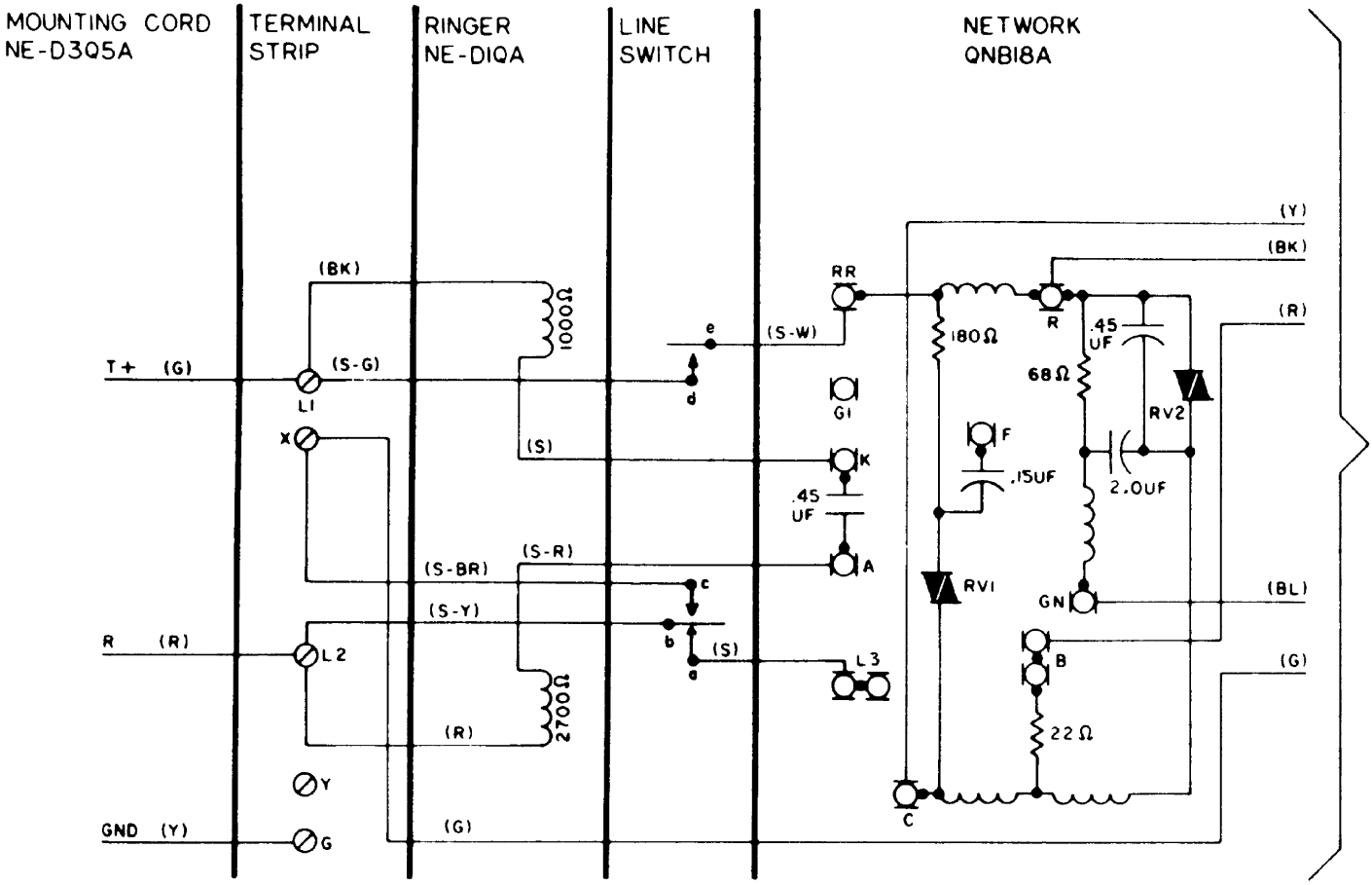

Schematic Diagram – QSK2100A Telephone Set
(For Sets equipped with QNB18A Network)