S-C 1800/1810 SERIES 5-LINE TELEPHONES *

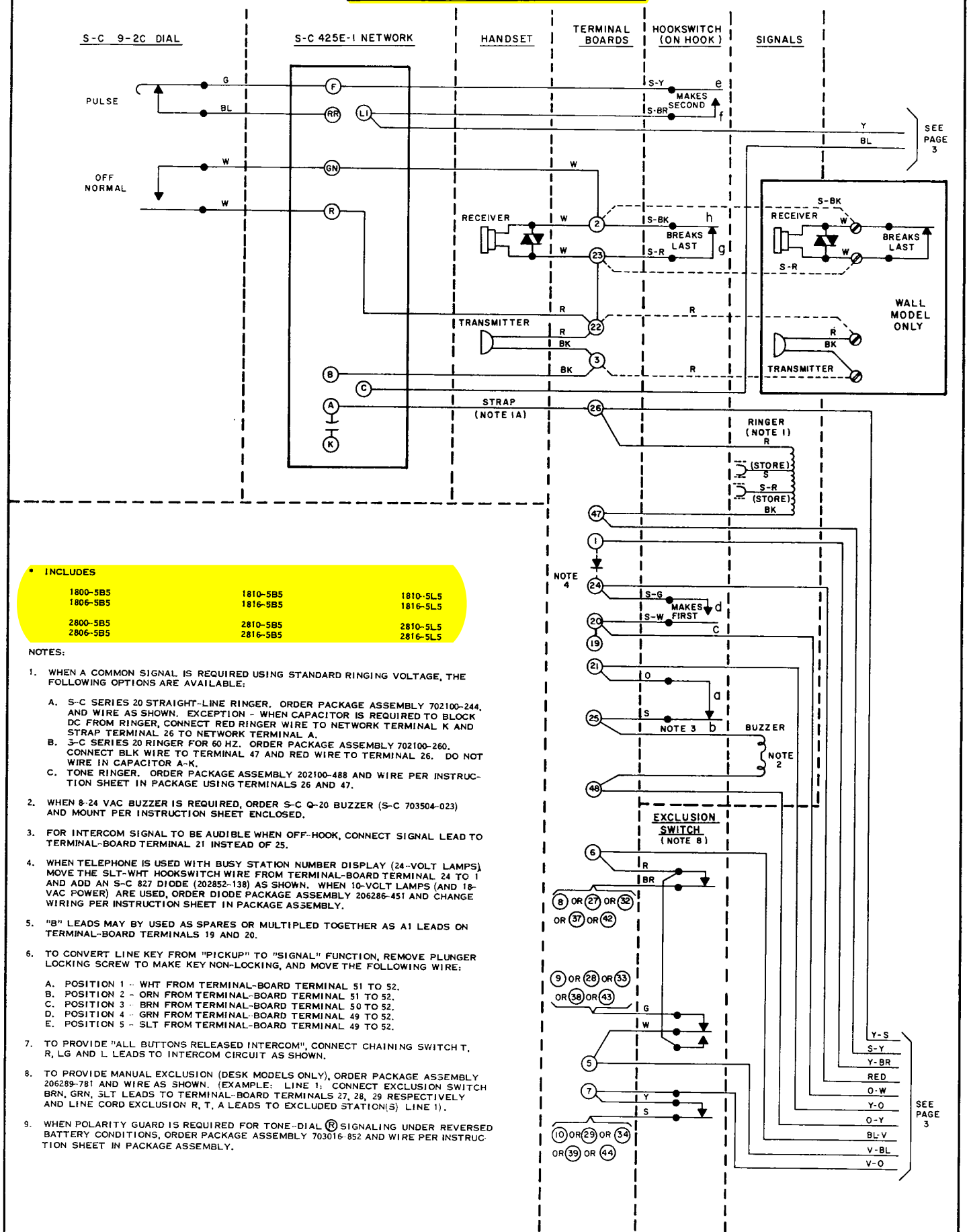

* INCLUDES

1800-5B5	1810-5B5	1810-5L5
1806-5B5	1816-5B5	1816-5L5
2800-5B5	2810-5B5	2810-5L5
2806-5B5	2816-5B5	2816-5L5

NOTES:

1. WHEN A COMMON SIGNAL IS REQUIRED USING STANDARD RINGING VOLTAGE, THE FOLLOWING OPTIONS ARE AVAILABLE:

   A. S-C SERIES 20 STRAIGHT-LINE RINGER. ORDER PACKAGE ASSEMBLY 702100-244, AND WIRE AS SHOWN. EXCEPTION - WHEN CAPACITOR IS REQUIRED TO BLOCK DC FROM RINGER, CONNECT RED RINGER WIRE TO NETWORK TERMINAL K AND STRAP TERMINAL 26 TO NETWORK TERMINAL A.
   B. S-C SERIES 20 RINGER FOR 60 HZ. ORDER PACKAGE ASSEMBLY 702100-260. CONNECT BLK WIRE TO TERMINAL 47 AND RED WIRE TO TERMINAL 26. DO NOT WIRE IN CAPACITOR A-K.
   C. TONE RINGER. ORDER PACKAGE ASSEMBLY 202100-488 AND WIRE PER INSTRUCTION SHEET IN PACKAGE USING TERMINALS 26 AND 47.

2. WHEN 8-24 VAC BUZZER IS REQUIRED, ORDER S-C Q-20 BUZZER (S-C 703504-023) AND MOUNT PER INSTRUCTION SHEET ENCLOSED.

3. FOR INTERCOM SIGNAL TO BE AUDIBLE WHEN OFF-HOOK, CONNECT SIGNAL LEAD TO TERMINAL-BOARD TERMINAL 21 INSTEAD OF 25.

4. WHEN TELEPHONE IS USED WITH BUSY STATION NUMBER DISPLAY (24-VOLT LAMPS), MOVE THE SLT-WHT HOOKSWITCH WIRE FROM TERMINAL-BOARD TERMINAL 24 TO 1 AND ADD AN S-C 827 DIODE (202852-138) AS SHOWN. WHEN 10-VOLT LAMPS (AND 18-VAC POWER) ARE USED, ORDER DIODE PACKAGE ASSEMBLY 206286-451 AND CHANGE WIRING PER INSTRUCTION SHEET IN PACKAGE ASSEMBLY.

5. "B" LEADS MAY BY USED AS SPARES OR MULTIPLED TOGETHER AS A1 LEADS ON TERMINAL-BOARD TERMINALS 19 AND 20.

6. TO CONVERT LINE KEY FROM "PICKUP" TO "SIGNAL" FUNCTION, REMOVE PLUNGER LOCKING SCREW TO MAKE KEY NON-LOCKING, AND MOVE THE FOLLOWING WIRE:

   A. POSITION 1 - WHT FROM TERMINAL-BOARD TERMINAL 51 TO 52.
   B. POSITION 2 - ORN FROM TERMINAL-BOARD TERMINAL 51 TO 52.
   C. POSITION 3 - BRN FROM TERMINAL-BOARD TERMINAL 50 TO 52.
   D. POSITION 4 - GRN FROM TERMINAL-BOARD TERMINAL 49 TO 52.
   E. POSITION 5 - SLT FROM TERMINAL-BOARD TERMINAL 49 TO 52.

7. TO PROVIDE "ALL BUTTONS RELEASED INTERCOM", CONNECT CHAINING SWITCH T, R, LG AND L LEADS TO INTERCOM CIRCUIT AS SHOWN.

8. TO PROVIDE MANUAL EXCLUSION (DESK MODELS ONLY), ORDER PACKAGE ASSEMBLY 206289-781 AND WIRE AS SHOWN. (EXAMPLE: LINE 1: CONNECT EXCLUSION SWITCH BRN, GRN, SLT LEADS TO TERMINAL-BOARD TERMINALS 27, 28, 29 RESPECTIVELY AND LINE CORD EXCLUSION R, T, A LEADS TO EXCLUDED STATION(S) LINE 1).

9. WHEN POLARITY GUARD IS REQUIRED FOR TONE-DIAL Ⓡ SIGNALING UNDER REVERSED BATTERY CONDITIONS, ORDER PACKAGE ASSEMBLY 703016-852 AND WIRE PER INSTRUCTION SHEET IN PACKAGE ASSEMBLY.

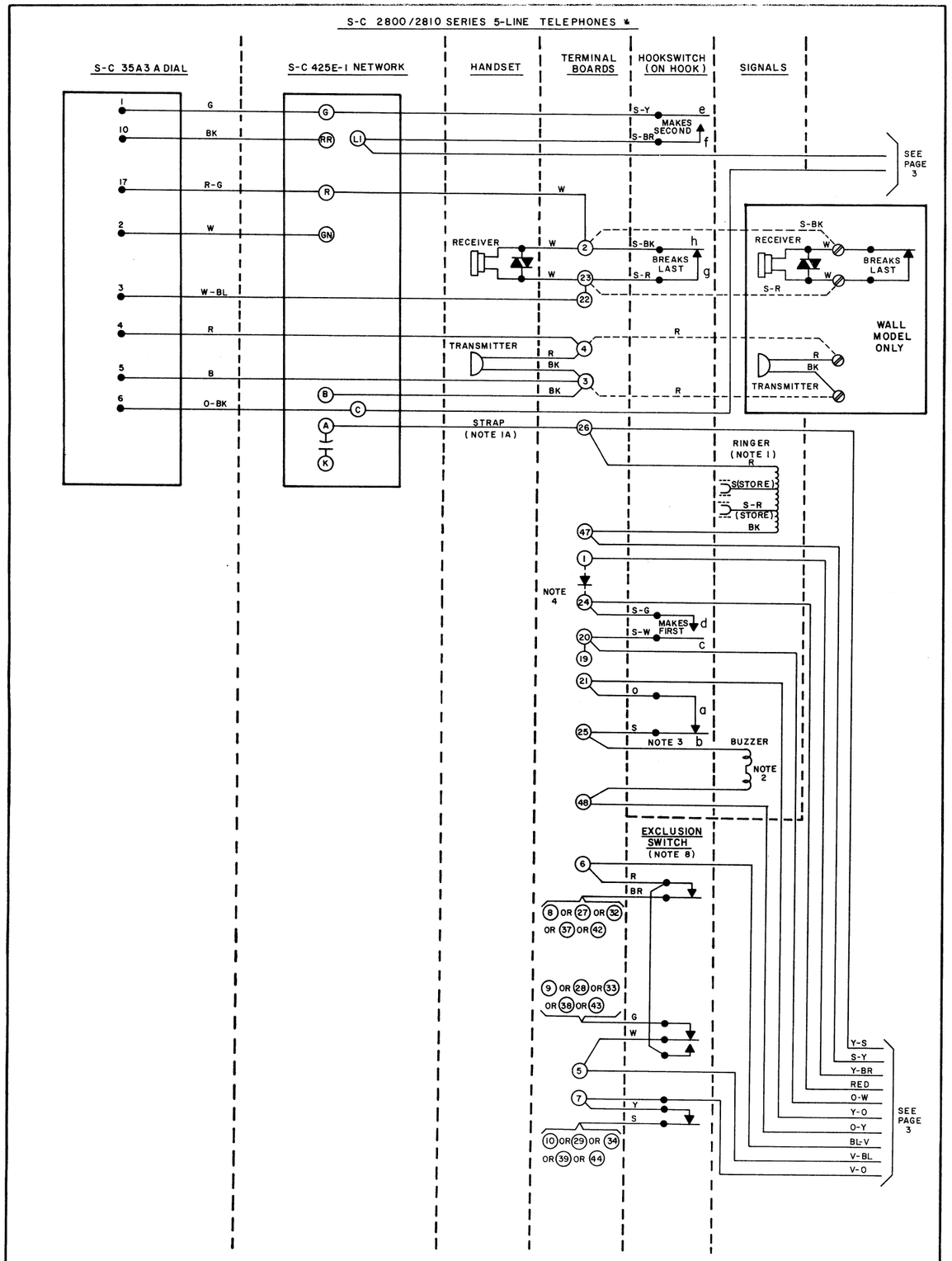
S-C 2800/2810 SERIES 5-LINE TELEPHONES
S-C 35A3 A DIAL
S-C 425E-1 NETWORK
HANDSET
TERMINAL BOARDS
HOOKSWITCH (ON HOOK)
SIGNALS
MAKES SECOND
SEE PAGE 3
RECEIVER
BREAKS LAST
WALL MODEL ONLY
TRANSMITTER
STRAP (NOTE 1A)
RINGER (NOTE 1)
S(STORE)
S-R (STORE)
NOTE 4
MAKES FIRST
NOTE 3
BUZZER
NOTE 2
EXCLUSION SWITCH (NOTE 8)
SEE PAGE 3

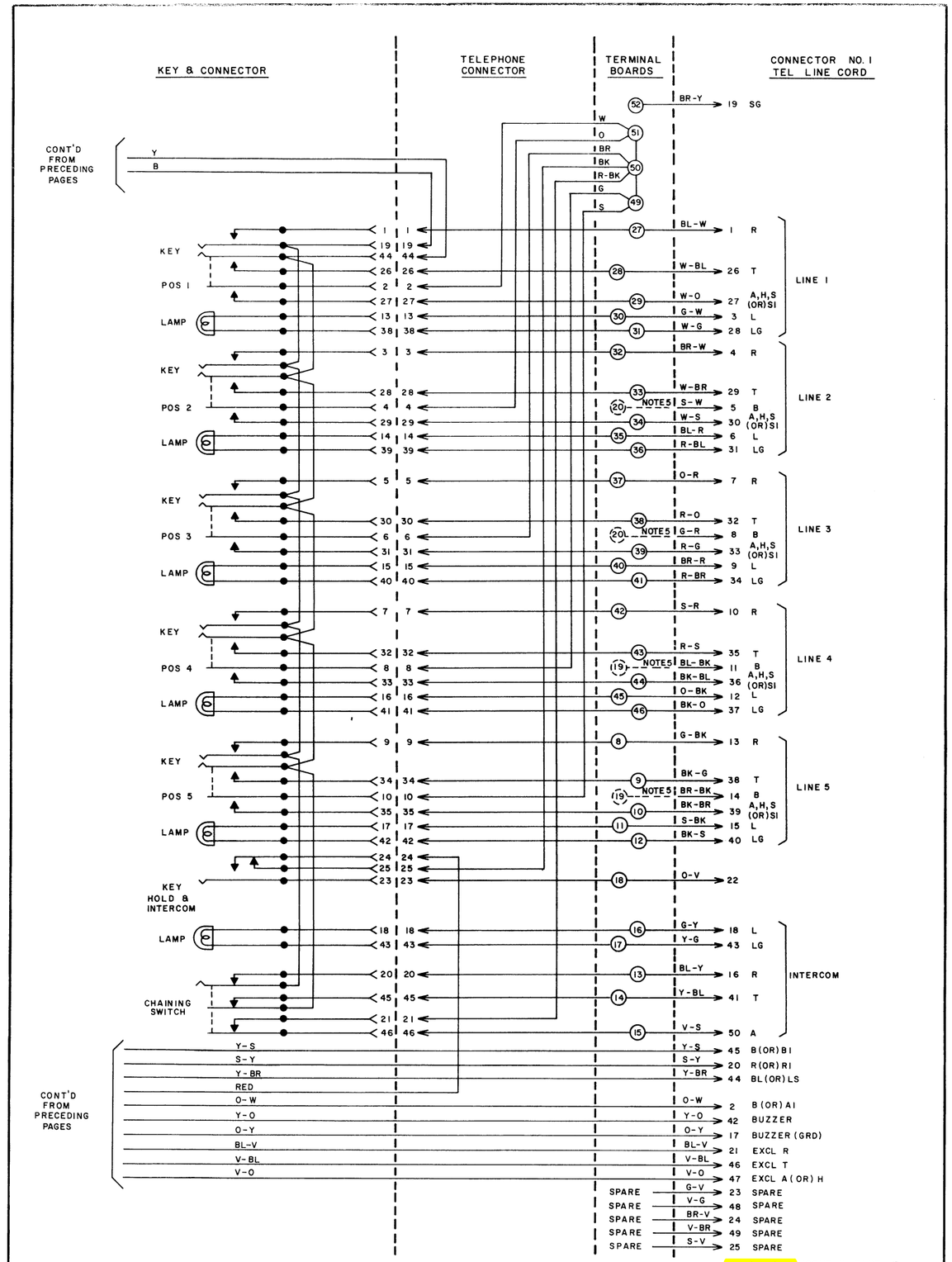
KEY & CONNECTOR
TELEPHONE CONNECTOR
TERMINAL BOARDS
CONNECTOR NO. 1 TEL LINE CORD
CONT'D FROM PRECEDING PAGES
KEY
POS 1
LAMP
POS 2
POS 3
POS 4
POS 5
KEY HOLD & INTERCOM
CHAINING SWITCH
LINE 1
LINE 2
LINE 3
LINE 4
LINE 5
INTERCOM
NOTE 5
SPARE