SD-95102-02 CIRCUIT REQUIREMENTS [A]

NOISE AMPLIFIER RECTIFIER (NOISE AMP RECT)

APPARATUS DES.	CODE	OPTION	CKT FIG.	NOTE	MECH REQT. SHP FIG.	CONN	ANGL TYPE	CIRCUIT PREPARATION BLOCK OR REGULATE	TEST CLIP DATA CONN BATT	CONN GRD	TEST SET PREP	SEE TEST NOTE NO.	DIRECT CURRENT FLOW REQT. TEST WDG	TEST FOR	AFTER SOAK MA.	TEST MA.	READJ MA.	REMARKS
RELAYS																		
A2 & D	B132		1		3	H	20			R T	REL TST	GRD		0		26	17	
B	B250		1		187/101	H	29			T(B)		GRD		0		16.5	6	

CIRCUIT NOTES:

101. IN OFFICES WITH REGULATED BATTERY TUBES (1), (2), AND (3) SHALL BE 311A, 310A, AND 311A RESPECTIVELY. IN NON-REGULATED BATTERY OFFICES OR WHEN 48 VOLT BATTERY IS USED, TUBES (1), (2) AND (3) SHALL BE 329A, 328A, AND 329A RESPECTIVELY. (MFR DISC SEE NOTE 110)

102. THE FILAMENT AND SIGNAL GROUNDS SHALL BE CONNECTED TOGETHER AT THE MISCELLANEOUS FUSE PANEL BAYS.

103. IN OFFICES WITH NON-REGULATED BATTERY OR WHEN 48 VOLT BATTERY IS USED, USE "Y" WIRING; OTHERWISE USE "X" WIRING. (MFR DISC)

104. IN OFFICES WITH REGULATED BATTERY, THE FILAMENT CURRENT SHALL BE BETWEEN 0.870 AND 1.05 AMP. WHEN RESISTORS ARE SUBSTITUTED FOR ELECTRON TUBES, 312 & 313 (11A) FOR 310A AND 1.5 Ω ± 1% (14A) FOR 311A. RESISTORS (U), (V) AND (W) SHALL BE ADJUSTED TO OBTAIN 0.960 ± .009 AMP SUBJECT TO THE FOLLOWING CORRECTIONS. (MFR DISC SEE NOTE 112)

CIRCUIT NOTES (CONT.)

104. (CONT.)

MFR DISC	DEVIATION FROM MEAN VOLTAGE	0.1	0.2	0.3	0.4	0.5
	CORRECTION IN AMPERES	.0045	.009	.013	.017	.021

105. IN OFFICES WITH NON-REGULATED BATTERY, THE FIL. CURRENT SHALL BE BETWEEN 1.120 AND 1.44 AMPERES WHEN THE BATTERY VOLTAGE IS BETWEEN 20 AND 28 VOLTS. (MFR DISC)

106. "DI" DOES NOT APPLY TO PIGTAIL LEADS.

107. EACH PAIR OF T AND R LEADS (T1, R1 AND T2, R2) BETWEEN FIG. 1 AND 2 SHOULD BE AS SHORT AS POSSIBLE AND NO LONGER THAN 10 PAIR-FEET.

108. ON ISSUE 7B OF THIS DRAWING, CAPACITORS D AND L WERE REPLACED BY ONE DUAL TYPE KS 13974, TWO 25 UF WITH A COMMON NEGATIVE.

109. PROVIDE 1 1/3 AMP FUSE FOR EITHER -24V OR -48 V SIG BATTERY. BATTERY SUPPLY FOR FIG. 2 USING FB LEAD "T" OPTION IS RATED "MFR DISC." ON ISSUE 8B.

110. TYPES 328 AND 329 TUBES ARE PREFERRED FOR EITHER -24V OR -48V BAT. "Y" OPTION ON THE (2) RES. SHOULD ALWAYS BE CONNECTED WHEN USING 328 AND 329 TYPE TUBES.

111. IF NECESSARY WHEN USING 328 AND 329 TYPE TUBES, REMOVE "Y" OPTION STRAP FROM (U), (V) AND (W) RESISTORS ONLY AND ADJUST (U), (V) & (W) RESISTORS TO OBTAIN 19 ± 1 VOLTS BETWEEN TERM. 5 (FB1) OR TERM. 6 (FB) AND TERM. 6 (FIL) JACK, WHEN THE FILAMENT SUPPLY VOLTAGE IS 24 OR 48 ± 1 VOLTS.

112. IF 310A & 311A TUBES ARE USED, DO NOT USE "Y" OR "V" OPTIONS. ADJUST (U), (V) & (W) RESISTORS TO OBTAIN 19 ± 1 V. BETWEEN TERMINALS 5 (FB1) OR 6 (FB) AND TERMINAL 6 (FIL) JACK

FIGS. AND OPTIONS ON THIS DWG			
FIGS.			
1			
2			
APP. OR WIRING			
S			
Y			
X			
W			
V			
R	A		
R	B		

FIG. 1K (FOR FIG. 1)

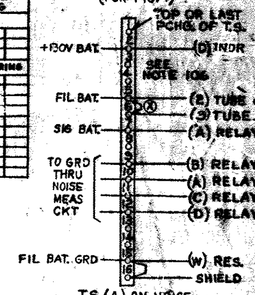

T.S. (A) ON NOISE AMP. RECT PANEL

FIG. 2K (FOR FIG. 2)

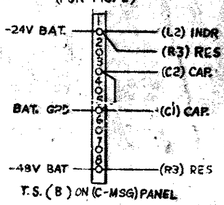

T.S. (B) ON (C-MSG) PANEL

EQUIPMENT NOTES:

201. FOR WIRING EXTERNAL TO THE PANEL INCLUDING BATTERY SUPPLY (EXCEPT AS COVERED IN NOTE 109). SEE NOISE MEASURING CKTS SD-95900-01, SD-16074-01 OR SD-59433-01.

INFORMATION NOTES:

301. OFFICE JOB RECORDS NEED NOT BE MAINTAINED FOR V AND Y OPTIONS.

302. OBTAINABLE FROM LORAIN TELEPHONE ELECTRONICS, 10 HERRING RD NEWMAN GA 30265

303. OBTAINABLE FROM ITT ELECTRONICS, INC. 369 LEXINGTON AVE CLIFTON N.J. 07011

FIG. 2
C-MESSAGE PANEL

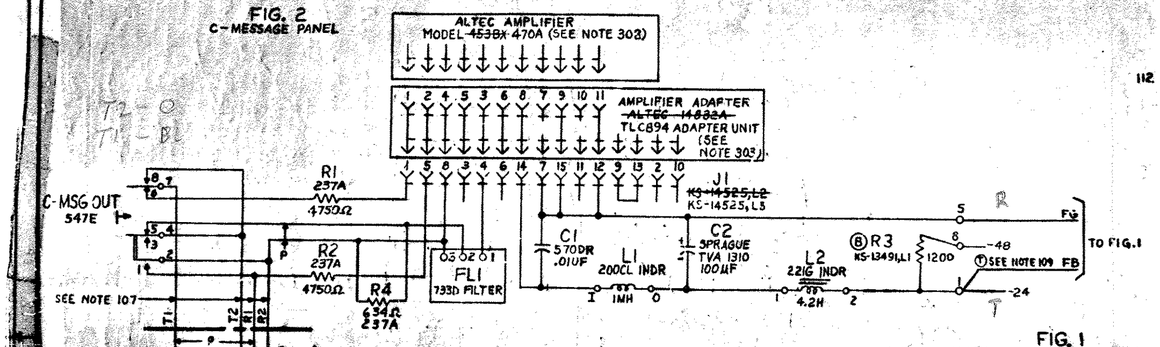

FIG. 1
J64001W-1W NOISE AMPLIFIER RECTIFIER PANEL

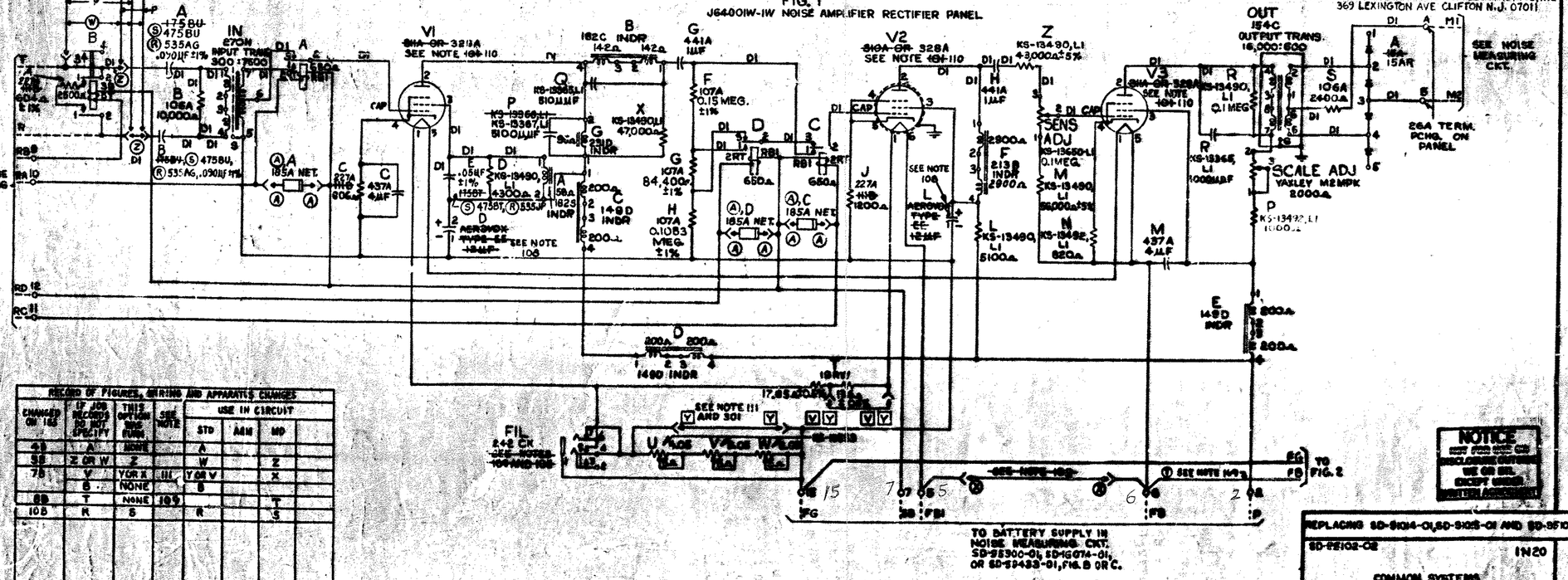

RECORD OF FIGURES, WIRING AND APPARATUS CHANGES							
CHANGED ON ISS	IF JOB RECORDS DO NOT SPECIFY	THIS OPTION SHOULD BE USED	SEE NOTE	USE IN CIRCUIT			
				STD	ALM	MD	
4B	A	NONE		A			
5B	Z OR W	Z		W		Z	
7B	V	V OR X	111	V OR V		X	
	B	NONE		B			
8B	T	NONE	105			T	
10B	R	S		R		S	

NOTICE

REPLACING SD-95014-01, SD-95105-01 AND SD-95108-01

SD-95102-02 1N20

COMMON SYSTEMS TRANSMISSION MEASURING 1W NOISE AMPLIFIER RECTIFIER CKT. FOR MEASURING NOISE ON TRANSMISSION CIRCUITS ON A MESSAGE WEIGHTING BASIS

(NOISE AMP. RECT.)

BELL TELEPHONE LABORATORIES, INC.

A.T.&T.CO. STANDARD

10B

R1

SD-95102-02

TCI Library https://www.telephonecollectors.info/