SD-9510-02 CIRCUIT REQUIREMENTS [A]

NOISE AMPLIFIER RECTIFIER (NOISE AMP RECT)

DES. 2	CODE	OPTION	CKT FIL.	REMARKS	MECH REQT SEP FIL.	CONT ANGL MOUNTING	CIRCUIT PREPARATION BLOCK OR ISOLATE	TEST CLIP DATA COMM BAT	COMM GRD	TEST SET PRES	SEE TEST NOTE NO.	TEST WDS	TEST FOR	DIRECT CURRENT FLOW REQT AFTER SOAK MA.	TEST MA.	READ MA.	REMARKS
RELAYS																	
A, B, C, D	R122		1		3	H	20	R(T)	R(L) (TST)	GRD			0		26	17	
E	U250		1		107/101	H	29	T(B)		GRD			0		6.3	6	

SD-9502-02

CIRCUIT NOTES:

101. IN OFFICES WITH REGULATED BATTERY TUBES (1), (2), AND (3) SHALL BE 310A, 310A, AND 311A RESPECTIVELY. IN NON-REGULATED BATTERY OFFICES OR WHEN 48 VOLT BATTERY IS USED, TUBES (1), (2), AND (3) SHALL BE 329A, 328A, AND 329A RESPECTIVELY. (MFR DISC SEE NOTE 110)

102. THE FILAMENT AND SIGNAL GROUNDS SHALL BE CONNECTED TOGETHER AT THE MISCELLANEOUS FUSE PANEL BAYS.

103. IN OFFICES WITH NON-REGULATED BATTERY OR WHEN 48 VOLT BATTERY IS USED, USE "V" WIRING; OTHERWISE USE "X" WIRING. (MFR DISC)

104. IN OFFICES WITH REGULATED BATTERY, THE FILAMENT CURRENT SHALL BE BETWEEN 0.870 AND 1.05 AMP. WHEN RESISTORS ARE SUBSTITUTED FOR ELECTRON TUBES, 51.2±1% (113A) FOR 310A AND 15.6±1% (114A) FOR 311A. RESISTORS (U), (V), AND (W) SHALL BE ADJUSTED TO OBTAIN 0.960±.009 AMP. SUBJECT TO THE FOLLOWING CORRECTIONS. (MFR DISC SEE NOTE 112)

CIRCUIT NOTES (CONT.)
104 (CONT.)

MFR DISC	DEVIATION FROM MEAN VOLTAGE	0.1	0.2	0.3	0.4	0.5
	CORRECTION IN AMPERES	.0045	.009	.013	.017	.021

105. IN OFFICES WITH NON-REGULATED BATTERY, THE FIL. CURRENT SHALL BE BETWEEN 1.120 AND 1.44 AMPERES WHEN THE BATTERY VOLTAGE IS BETWEEN 20 AND 28 VOLTS. (MFR DISC)

106. "DI" DOES NOT APPLY TO PIGTAIL LEADS.

107. EACH PAIR OF T AND R LEADS (T1, R1 AND T2, R2) BETWEEN FIG. 1 AND 2 SHOULD BE AS SHORT AS POSSIBLE AND NO LONGER THAN 10 PAIR-FEET.

108. ON ISSUE 7B OF THIS DRAWING, CAPACITORS D AND L WERE REPLACED BY ONE DUAL TYPE KS-13974, TWO 2.5 UF WITH A COMMON NEGATIVE.

109. PROVIDE 1 1/3 AMP FUSE FOR EITHER +24V OR -48V SIG BATTERY. BATTERY SUPPLY FOR FIG. 2 USING FB LEAD "T" OPTION IS RATED "MFR DISC." ON ISSUE 8B.

110. TYPES 328 AND 329 TUBES ARE PREFERRED FOR EITHER -24V OR -48V BAT. "V" OPTION ON THE (T) RES SHOULD ALWAYS BE CONNECTED WHEN USING 328 AND 329 TYPE TUBES.

111. IF NECESSARY WHEN USING 328 AND 329 TYPE TUBES, REMOVE "V" OPTION STRAP FROM (U), (V) AND (W) RESISTORS ONLY AND ADJUST (U), (V) & (W) RESISTORS TO OBTAIN 15 ± 1 VOLTS BETWEEN TERM. 5 (FB1) OF TERM. 6 (FB) AND TERM. 6 (FIL) JACK, WHEN THE FILAMENT SUPPLY VOLTAGE IS 24 OR 48 ± 1 VOLTS.

112. IF 310A & 311A TUBES ARE USED, DO NOT USE "Y" OR "V" OPTIONS. ADJUST (U), (V) & (W) RESISTORS TO OBTAIN 19 ± 1 V. BETWEEN TERMINALS 5 (FB1) OR 6 (FB) AND TERMINAL 6 (FIL) JACK

FIG. 2
C-MESSAGE PANEL

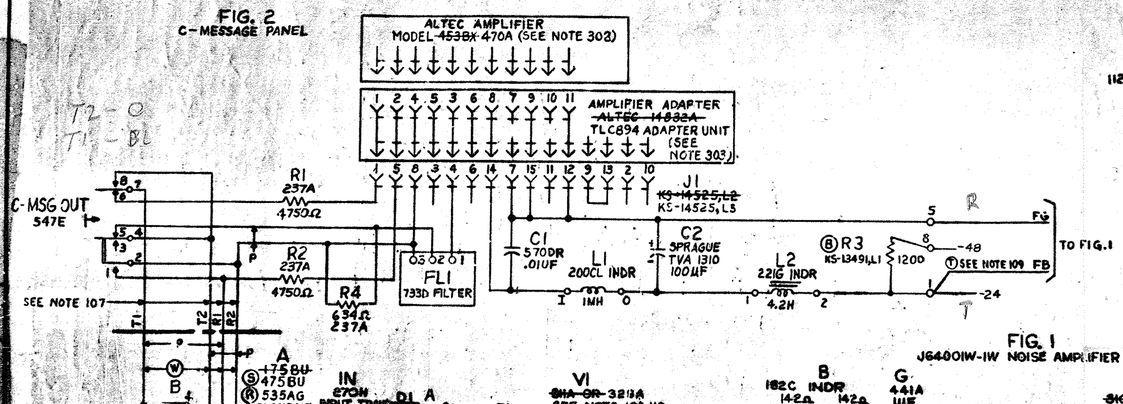

FIG. 1
J64001W-1W NOISE AMPLIFIER RECTIFIER PANEL

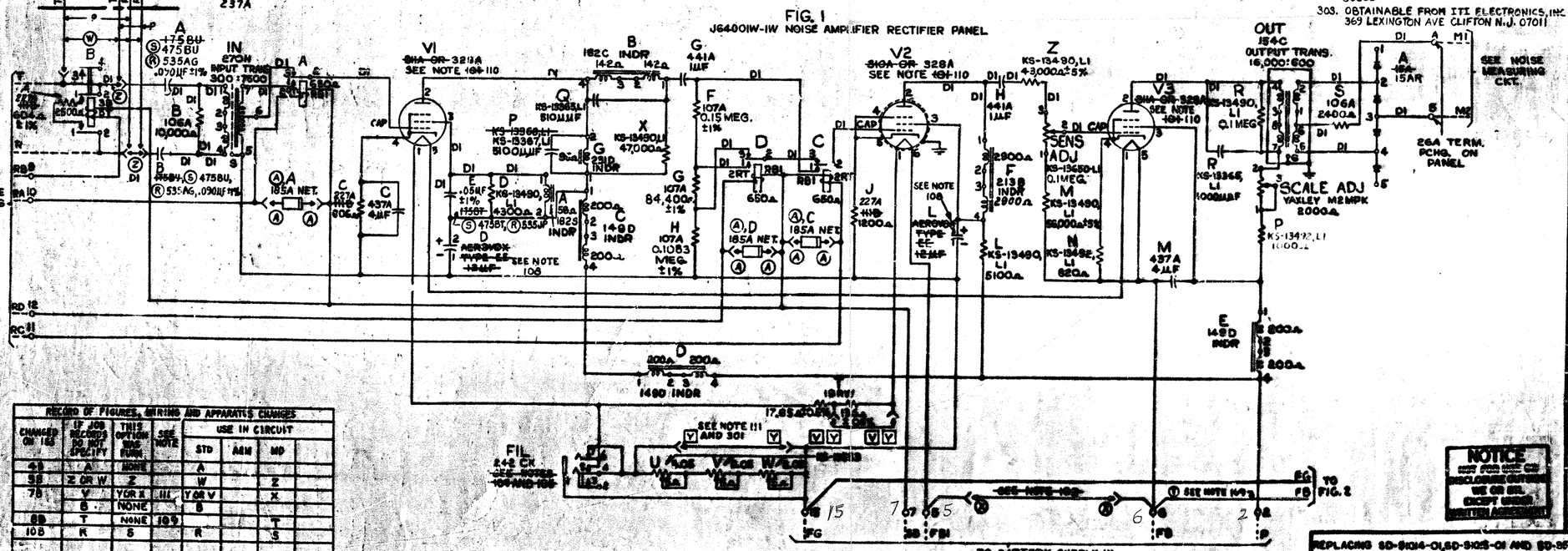

RECORD OF FIGURES, WIRING AND APPARATUS CHANGES							
CHANGED ON ISS	IF JOB RECORDS DO NOT SPECIFY	THIS OPTION BOX RUNS	SEE NOTE	USE IN CIRCUIT STD	AMN	MD	
4B	A	NONE		A			
5B	Z OR W	Z		W		Z	
7B	V	Y OR X	111	Y OR V		X	
8B	S	NONE		S			
8B	T	NONE	109			T	
10B	K	S		R		S	

FIGS. AND OPTIONS ON THIS DWG	
FIGS.	
1	
2	
APP. OR WIRING	
Z	
Y	
X	
W	
V	
S	
R	A
	B

FIG. 1K
(FOR FIG. 1)

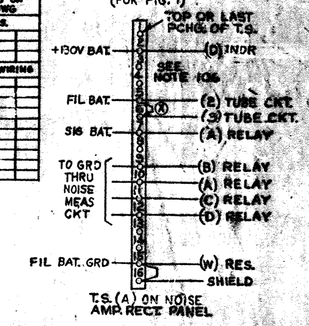

FIG. 2K
(FOR FIG. 2)

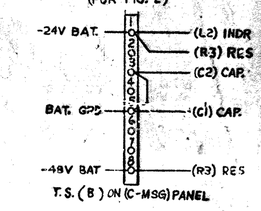

EQUIPMENT NOTES:

201. FOR WIRING EXTERNAL TO THE PANEL INCLUDING BATTERY SUPPLY (EXCEPT AS COVERED IN NOTE 109). SEE NOISE MEASURING CKTS SD-95900-01, SD-16074-01 OR SD-59433-01.

INFORMATION NOTES:

301. OFFICE JOB RECORDS NEED NOT BE MAINTAINED FOR V AND Y OPTIONS.

302. OBTAINABLE FROM LORAIN TELEPHONE ELECTRONICS, 10 HERRING RD NEWMAN GA 30265

303. OBTAINABLE FROM ITT ELECTRONICS, INC. 369 LEXINGTON AVE CLIFTON N.J. 07011

ISS	DATE	ISS	DATE
1	1	11-17-55	
2B	1 APP 2B	4-11-56	
3B	1 APP 2B	7-11-56	
4B	1 APP 3B	11-15-56	
5B	2B	12-3-56	
6B	2B APP 1B	3-22-61	
7B	2B APP 2B	9-19-61	
8B	2B APP 3B	2-6-67	
9B	2B APP 4B	6-25-68	
10B	2B APP 5B	9-17-80	

NOTICE
THIS ITEM IS THE PROPERTY OF BELL TELEPHONE LABORATORIES, INC. USE OR DISCLOSURE OUTSIDE BELL SYSTEM EXCEPT UNDER WRITTEN AGREEMENT IS PROHIBITED.

J64001W( ) SD-95300-01 EQUIPMENT

REPLACING SD-91014-01, SD-91025-01 AND SD-95105-01

SD-95102-02 1N20

COMMON SYSTEMS
TRANSMISSION MEASURING
1W NOISE AMPLIFIER RECTIFIER CKT.
FOR MEASURING NOISE ON TRANSMISSION CIRCUITS ON A MESSAGE WEIGHTING BASIS

(NOISE AMP. RECT.)

BELL TELEPHONE LABORATORIES, INC.

A.T.&T. CO. STANDARD
10B

R1

SD-95102-02

SD-95105-02

TCI Library https://www.telephonecollectors.info/