MANUFACTURING NOTES
CONVENTIONS

DENOTES SPLICE

1 - "SW1" WIRING TO BE 24BG COLORED GREEN UNLESS OTHERWISE SPECIFIED AND RUN AS SURFACE WIRING.

2 - "PT" DENOTES LEADS PART OF APPARATUS.

3 - "SKR" DENOTES SKINNER CONNECTION.

4 - NO LEADS ON THIS DRAWING ARE TO BE RUN BY THE INSTALLER EXCEPT WHEN MODIFYING TRK UNITS REF J-590/3 F-1 WIRED PER FIG 1 TO AGREE WITH TRK UNITS PER J-59013 F-2 WIRED PER FIG 2. ~~AS OUTLINED IN MOD SUPP K-297-463~~

J1	K12														

5-23-49

	RGL	HHM		1
IN FIG. 1 AT APP'S "DAR (R) TRK PERM" WAS "T" ADDED. R 8-48				CLASS "D"
	RGL	HHM		2
IN FIG 1 AT (T) RES 25 (RET) LINES OUT 50-66550-01 (SE 1) ADDED RATING OF 8WE REMD "PROVISIONAL"			5-5-49	CLASS "D"
	RGL			3
			10-26-49	CLASS "D"
	RGL			4
IN FIG 1 AT (T) RES 25 (RET) LINES OUT 50-66550-01 (SE 1) ADDED RATING OF 8WE REMD "PROVISIONAL"			8-15-50	CLASS "D"
	RGL			5
IN FIG 1, AT APP 2 "D" APP WAS NOT SO DES NOR RATED "M" & "B" APP ADDED.			8-31-50	CLASS "D"
	EAL			6
FIG 1 RATED M.D. FIG 2 ADDED			3-17-53	CLASS "D"
	ZAJ			7
IN FIG 2 AT (R) REC ON 6TH TERM FROM RIGHT OUT-LINE FROM VAR PACKING FROM 3RD TERM FROM RIGHT AND 3RD TERM FROM RIGHT OUT-LINE FROM RT. RECEIVE FROM 4TH TERM FROM RIGHT IN NOTE 4 "EXCEPT WHEN MODIFYING CTR" ADDED IN 1ST COLUMN 1 CLASS D" ADDED.			6-8-53	CLASS "A"
	ZAJ			8
IN UPPER RT. HAND CORNER, "C" DES AROUND THE "L" ADDED.			6-9-53	CLASS "B"
				9
IN FIG 2 ZC APP 4 WAS WAS NOT SO DES. ZB APP 4 WAS ADDED IN NOTE 4 LAST 6 WORDS OF NOTE LINED OUT.			8-27-54	CLASS "B"
	ZAJ			10
IN FIG 2 OUTPT LEADS RET (T) & (R) CONDS AND (T) & (R) THERMISTORS "ZC" WRG DESIG RMVD.			10-8-54	CLASS "D"
				11
IN FIG 2 AT (B) RES LMP. "ZM" APP WAS NOT SO DES "ZP" APP ADDED			2-23-56	CLASS "D"
	ZAN			12
RATING OF DWG READ "STANDARD"			1-27-59	CLASS "D"
	ZAJ			13

P-418105

REFERENCE
SD-66520-01, ISS 16

FIG 1 (MFR. DISC.)

CENTRAL OFFICE TRUNK UNIT CIRCUIT

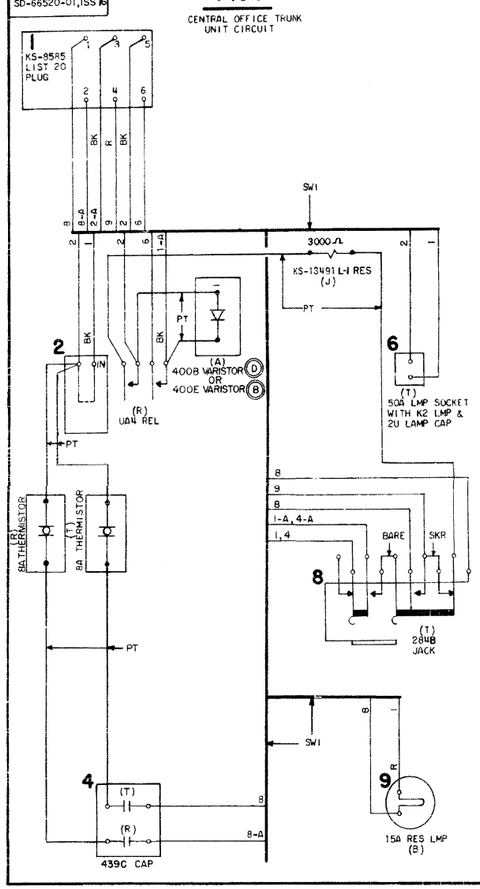

FIG 2

CENTRAL OFFICE TRUNK UNIT CIRCUIT

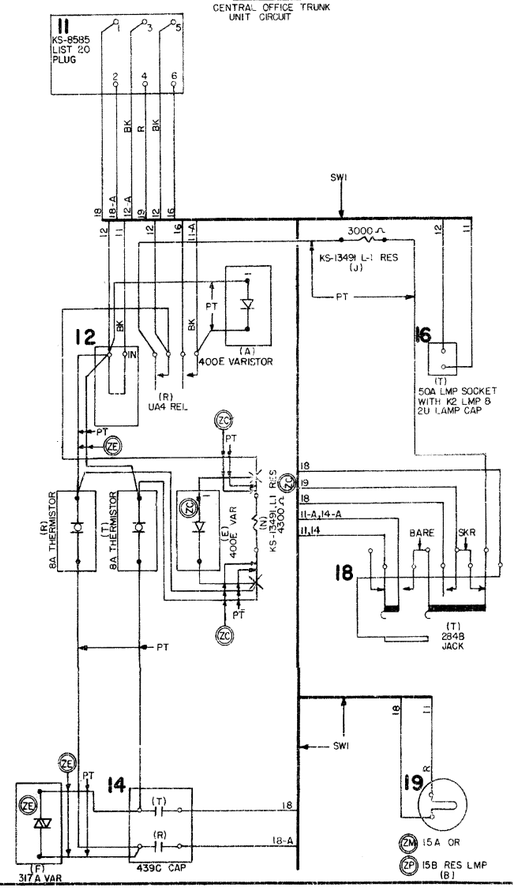

WIRING OF CENTRAL OFFICE TRUNK CIRCUIT NO 555 PBX CIRCUIT LABEL

PRINTED IN U.S.A.

T-66520-36 ISSUE 13

REDUCE TO 13" ± 1/16"

ENGINEERING NOTES

S1 - THIS DRAWING AGREES WITH	1	2	3	4	5	6	7	8	9	10	11	12		
~~T-66520-32~~	~~7~~	~~11~~	~~13~~											
SD-66520-01			6	8	8	9	12	12	12	15	15	16		

S2 - ORIGINAL CONNECTING DRAWINGS
NONE

S3 - EQUIPMENT ARRANGEMENT
ED-55667-01 (J59013F) ~~(H ED7-463)~~

12	ZP APP	ZM APP		ZP		ZM
10	ZC APP	ZE APP		ZE		ZB,ZC
7	FIG 2	FIG 1		2		1
6	B APP	D APP		B		D
CHANGED ON ISS	IF JOB RECORDS DO NOT SPEC	THIS OPTION FURNISHED	SEE ENG NOTE	STD	A B M	MD
				RATING		

RECORD OF FIGURE, APPARATUS AND WIRING CHANGES

T-66520-36

PBX SYSTEMS
NO 555 PBX
CENTRAL OFFICE TRUNK
UNIT CIRCUIT
CIRCUIT LABEL
P-418105

WESTERN ELECTRIC COMPANY, INC.

13

MFR. DISC.

R M

T-66520-36

PRINTED IN U.S.A.

TCI Library: www.telephonecollectors.info

T-66520-36