C. RYAN

PANEL DIAL SWITCHING SYSTEM

(BATTERY CUT-OFF — WITHOUT ZONE REGISTRATION)

TRAINING MANUAL

SEQUENCE CHARTS AND OPERATIONAL SKETCHES

THE AMERICAN TELEPHONE AND TELEGRAPH COMPANY

OPERATION AND ENGINEERING DEPARTMENT

PLANT OPERATION DIVISION

FOR TRAINING PURPOSES ONLY

FEBRUARY 1955

PREFACE

This provisional training material covers the Panel System, Battery Cut-Off type. - without Zone Registration

This manual contains a series of typical circuit diagrams. These are drawn in the simplified style which is used in teaching the complex 'Common Control' switching systems now in current use. This method makes use of sequence charts and operational sketches. This volume contains a chart and sketch for each of the typical circuits.

Since the drawings are intended to be used in the study of the Panel System, Battery Cut-Off type, without zone registration, and do not necessarily conform to any particular office, it may be necessary to consider the regular Schematic Drawings (SD's) and Circuit Descriptions (CD's) when preparing learners to work in a specific office.

Students should be cautioned that the particular circuits contained in this manual are intended to be used as training aids, and are not necessarily applicable for maintenance.

INDEX OF OPERATIONAL SKETCHES

PLANT SCHOOL
FOR TRAINING PURPOSES ONLY

SEQUENCE CHARTS & OPERATIONAL SKETCHES

PANEL SYSTEM | INDEX

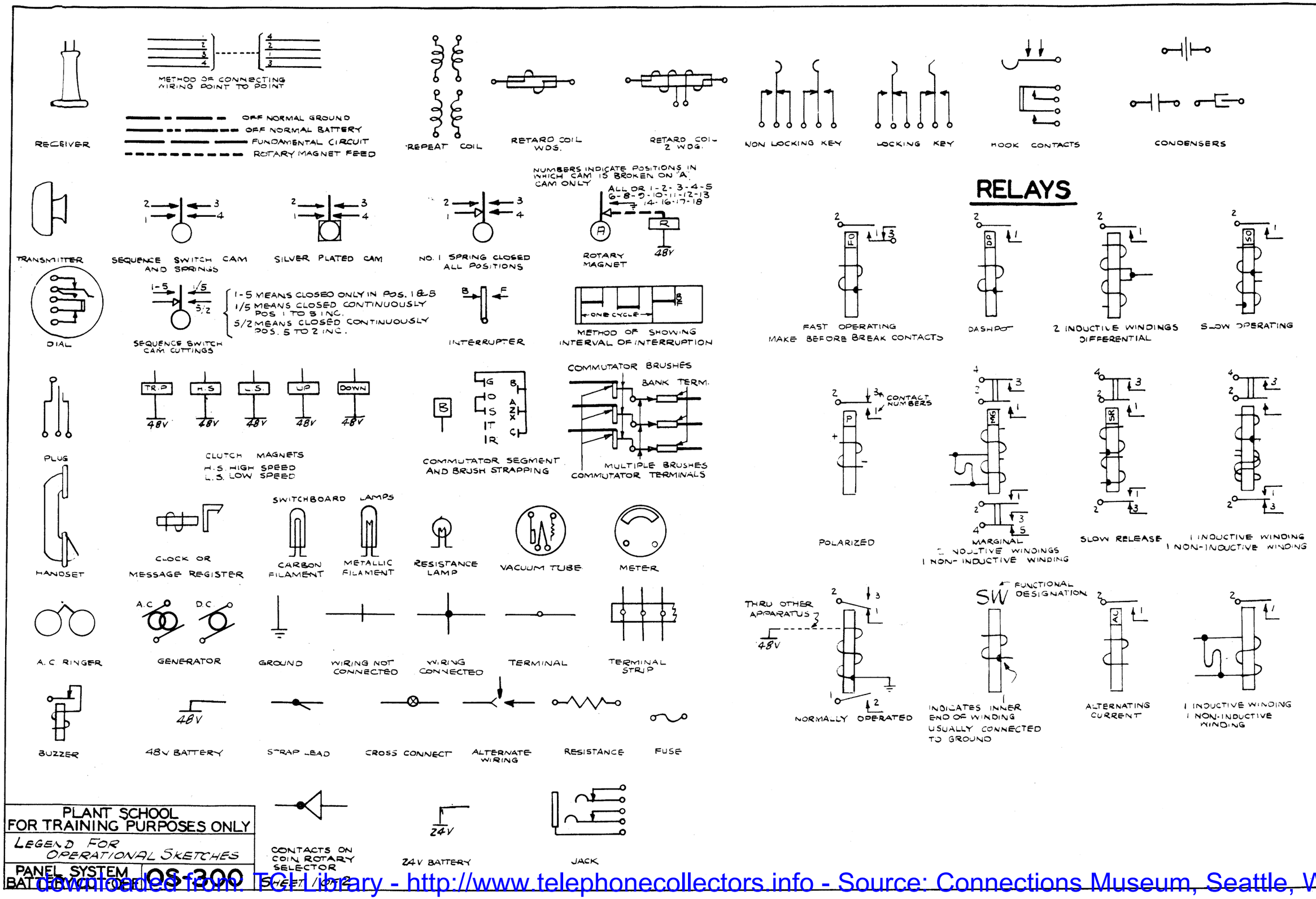

PLANT SCHOOL
FOR TRAINING PURPOSES ONLY

LEGEND FOR OPERATIONAL SKETCHES

PANEL SYSTEM
BATTERY SWITCHBOARD

OS-300

SHEET 1 / 1972

THE SYMBOLS AND CONVENTIONS FOR THE OPERATIONAL SKETCHES ARE THE SAME AS THOSE USED ON SCHEMATIC DRAWINGS (SD-1) WITH THE FOLLOWING EXCEPTIONS.

1. DETACHED CONTACT SYMBOLS ARE USED WHENEVER THEIR EMPLOYMENT AIDS IN SIMPLIFYING THE SKETCHES. THEY ARE SHOWN THUS:

(A) MAKE CONTACTS:

ALL RELAYS HAVING TOP AND BOTTOM SPRINGS.

ALL RELAYS NOT HAVING TOP AND BOTTOM SPRINGS. (MULTICONTACT)

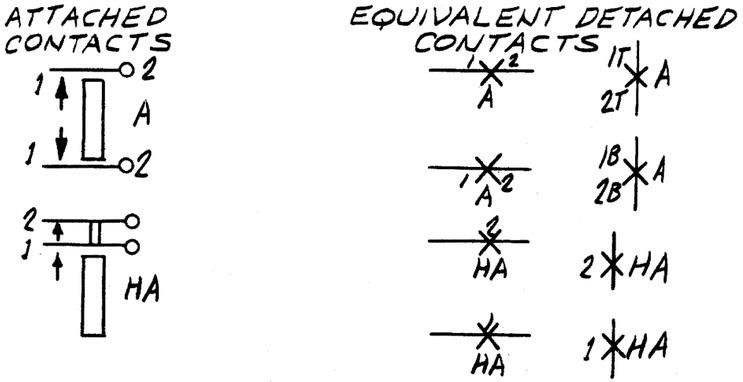

(B) BREAK CONTACTS:

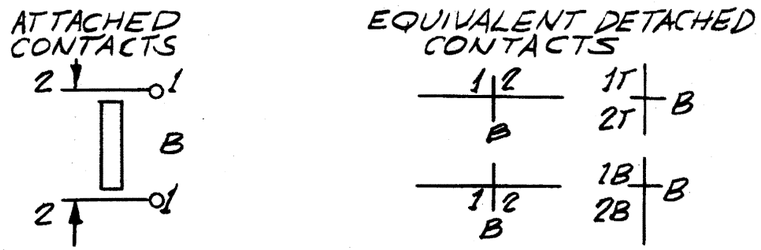

(C) TRANSFER CONTACT:

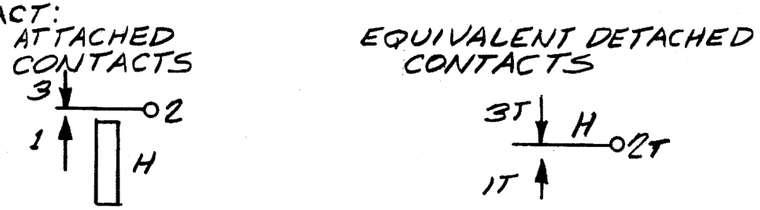

(D) OTHER CONTACTS:

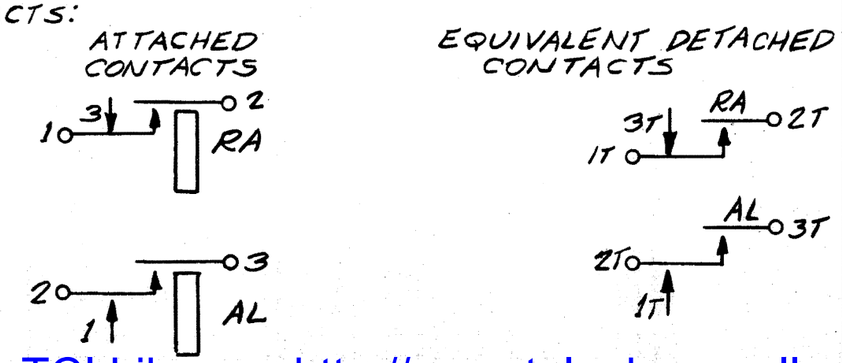

(E) 206 AND SIMILAR TYPE SELECTORS.

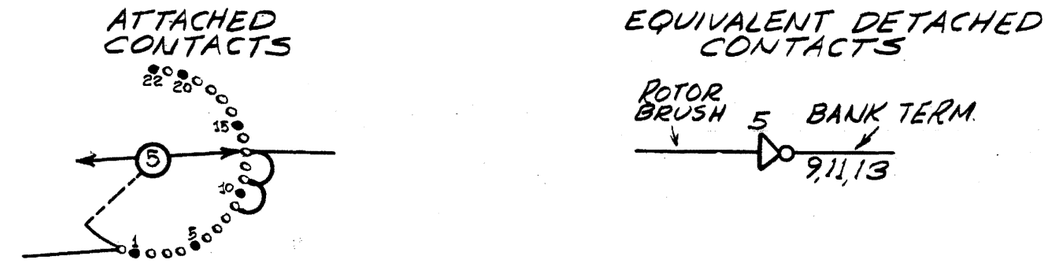

2. INNER ENDS OF WINDINGS ARE OMITTED.

3. BATTERY SYMBOL WITH THE NOMINAL VOLTAGE IS SHOWN THUS:

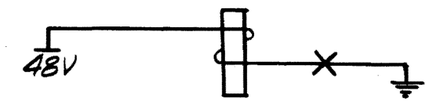

4. CONTACT PROTECTIONS IN GENERAL ARE OMITTED.

5. SEQUENCE CHARTS ARE IN GENERAL PROVIDED ON EACH SKETCH. THE DESIGNATIONS FOR ALL RELAYS OF WHICH THE OPERATING PATHS ARE SHOWN ON THE SKETCH ARE IN HEAVY CHARACTERS. ALL OTHERS ARE IN LIGHT CHARACTERS.

6. IN GENERAL STRAPPING OR MULTIPLE CONVENTIONS ARE OMITTED.

7. TB0-TB9 — INDICATES THAT THE MAKE CONTACTS (ONE EACH) ON RELAYS TB0 TO TB9 ARE WIRED IN PARALLEL.

8. CB- — INDICATES A MAKE CONTACT ON ONE OF A SERIES OF CB RELAYS.

9. GA/GB — INDICATES THAT EITHER GA OR GB DESIGNATION APPLIES.

10. TR JACK — INDICATES A BREAK CONTACT ON THE TR JACK.

11. MB JACK — INDICATES A MAKE CONTACT ON THE MB JACK.

12. INDICATES OFF-NORMAL GROUND

INDICATES OFF-NORMAL BATTERY

PLANT SCHOOL FOR TRAINING PURPOSES ONLY
LEGEND FOR OPERATIONAL SKETCHES
PANEL SYSTEM BATTERY CUT-OFF — OS-300

SHEET 2 OF 2

ISSUE 9-27-49

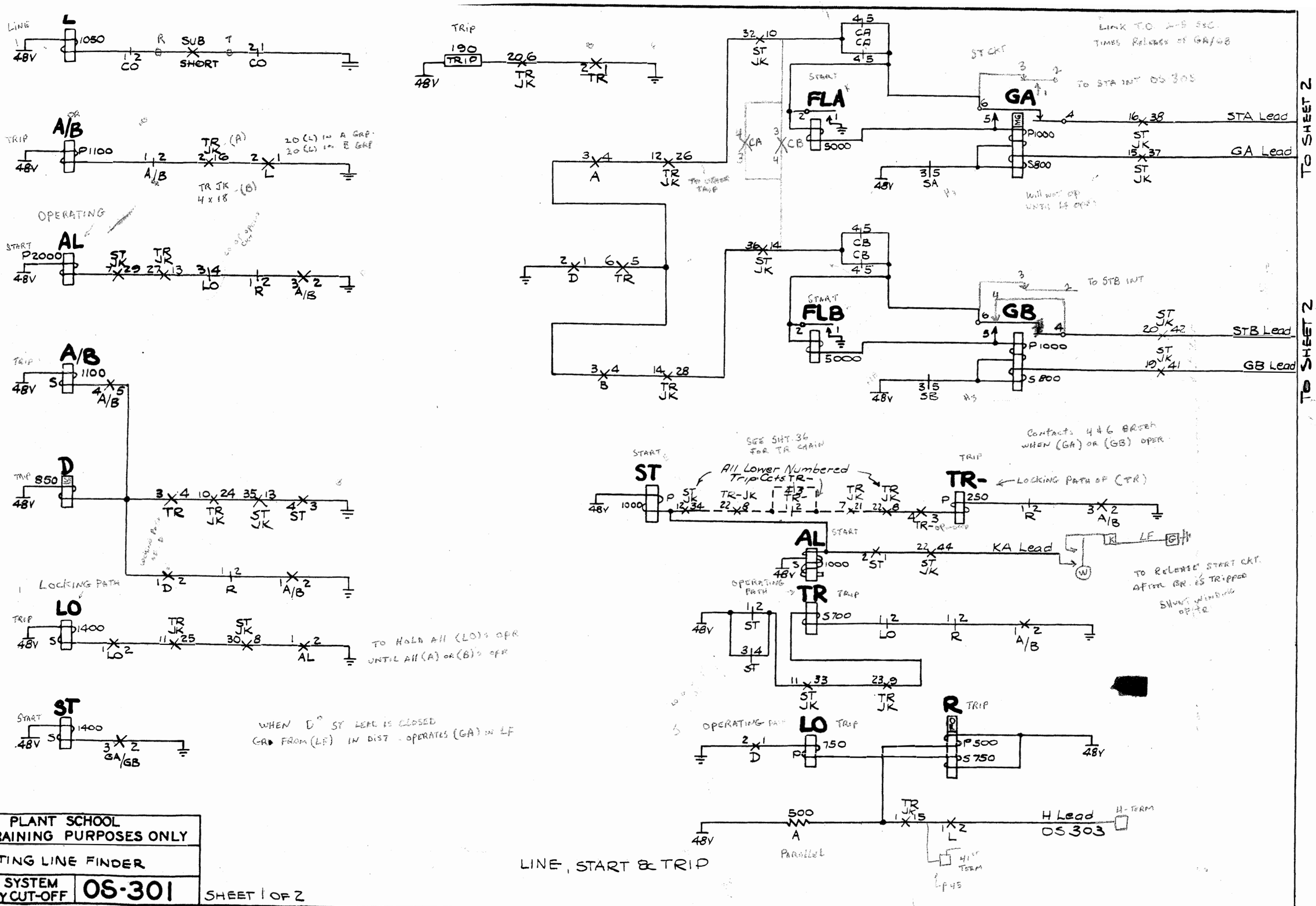

PLANT SCHOOL FOR TRAINING PURPOSES ONLY	
STARTING LINE FINDER	
PANEL SYSTEM BATTERY CUT-OFF	OS-301

SHEET 1 OF 2

LINE, START & TRIP

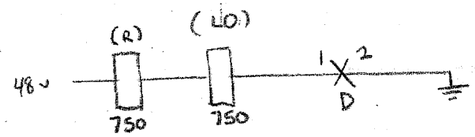

(LO) OPR
(R) FAILS TO OPR
32 MA

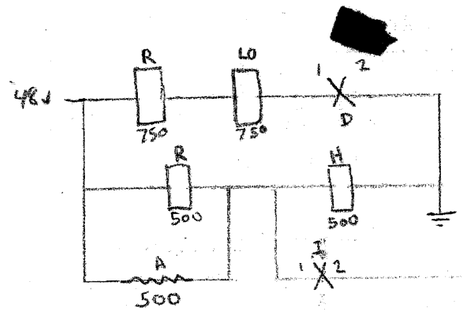

(H) OP
(R) FAILS to OP
64 MA

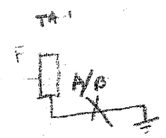

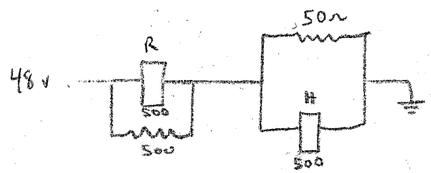

AFTER (H) OPR'S
(R) WILL OPR
ABOUT 144 MA

"GA" LOOPS THRU
ANY SWITCHES UNTIL
ONE IS FOUND IN POS 1

1 & 4 OF (P)
MADE ALWAYS

2 & 3 OF (P)
MADE 2/9
11/18

GA/GB LOAD SIMILAR
EXCEPT P & N CAMS USED
SEE

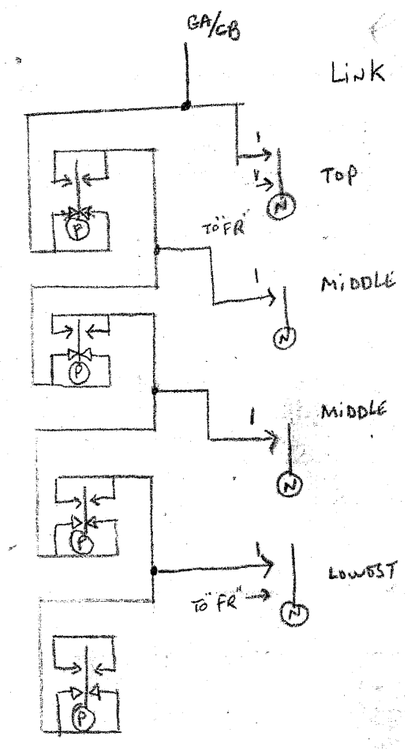

STA/STB

STA LOAD LOOPS
THRU ANY SS NOT
IN POS 1 TIL A
LINK SW IN POS 1
IS FOUND.

ONLY 1 LINK POS
#1

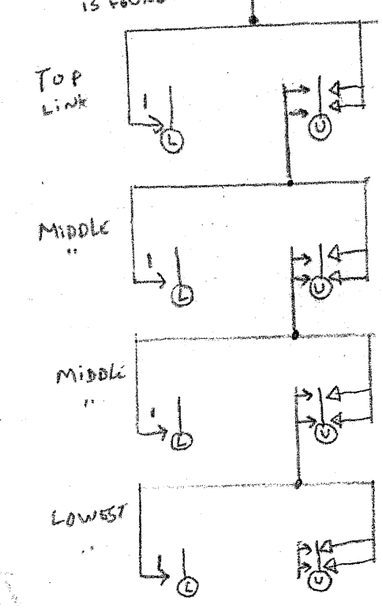

3 & 4 (U) MADE ALWAYS

1 & 2 (U) NOT MADE
POS 1

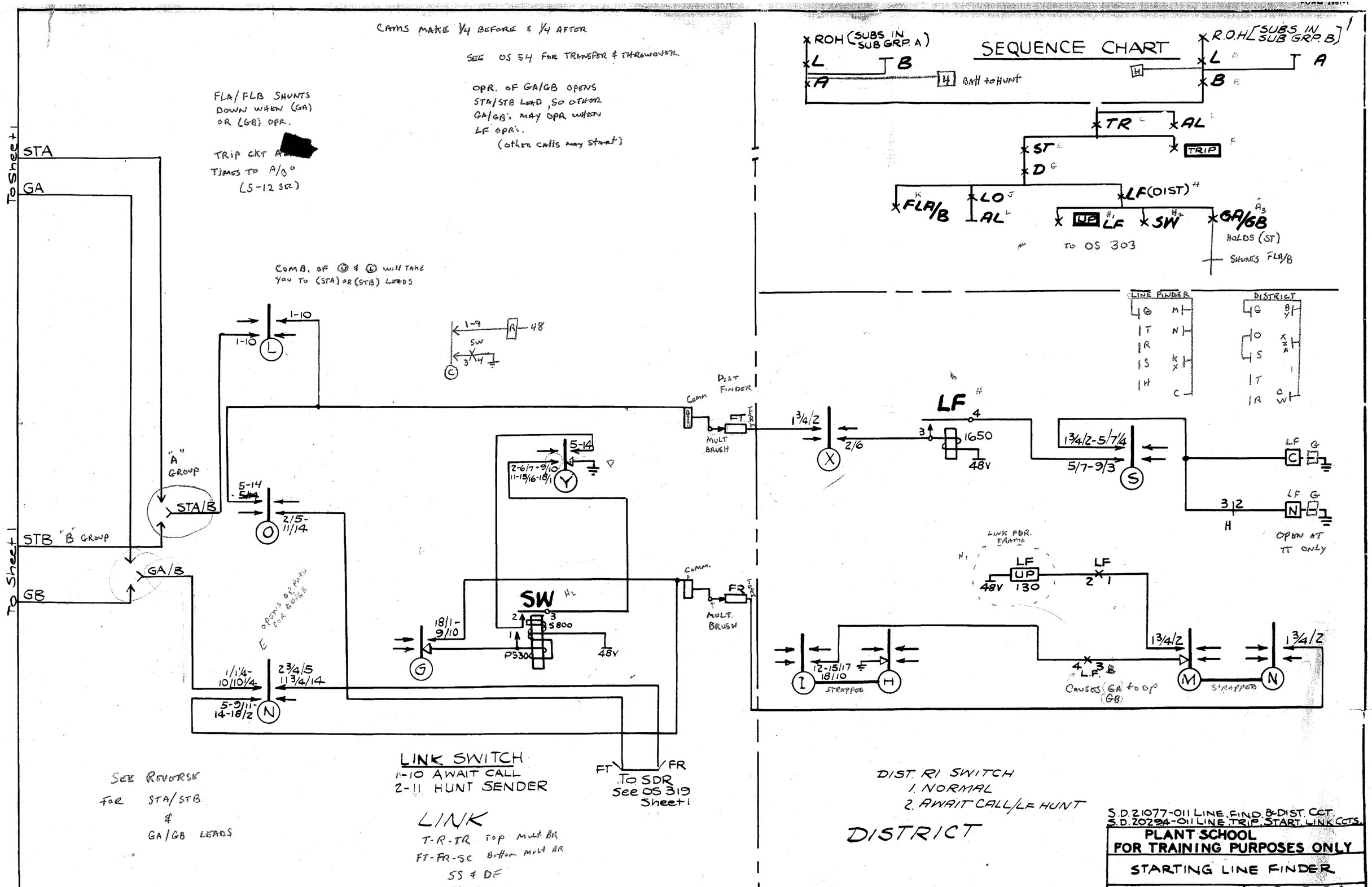

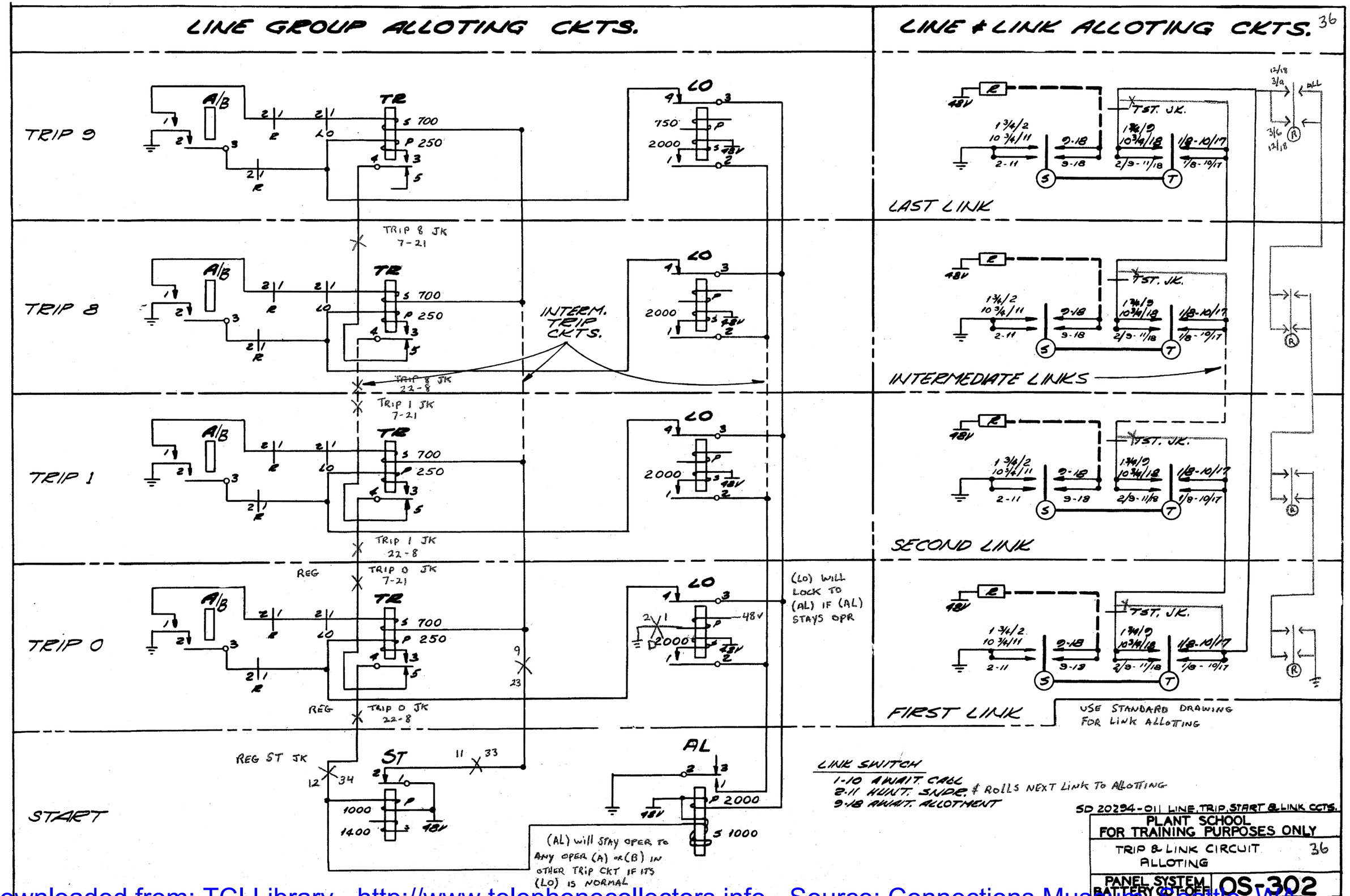

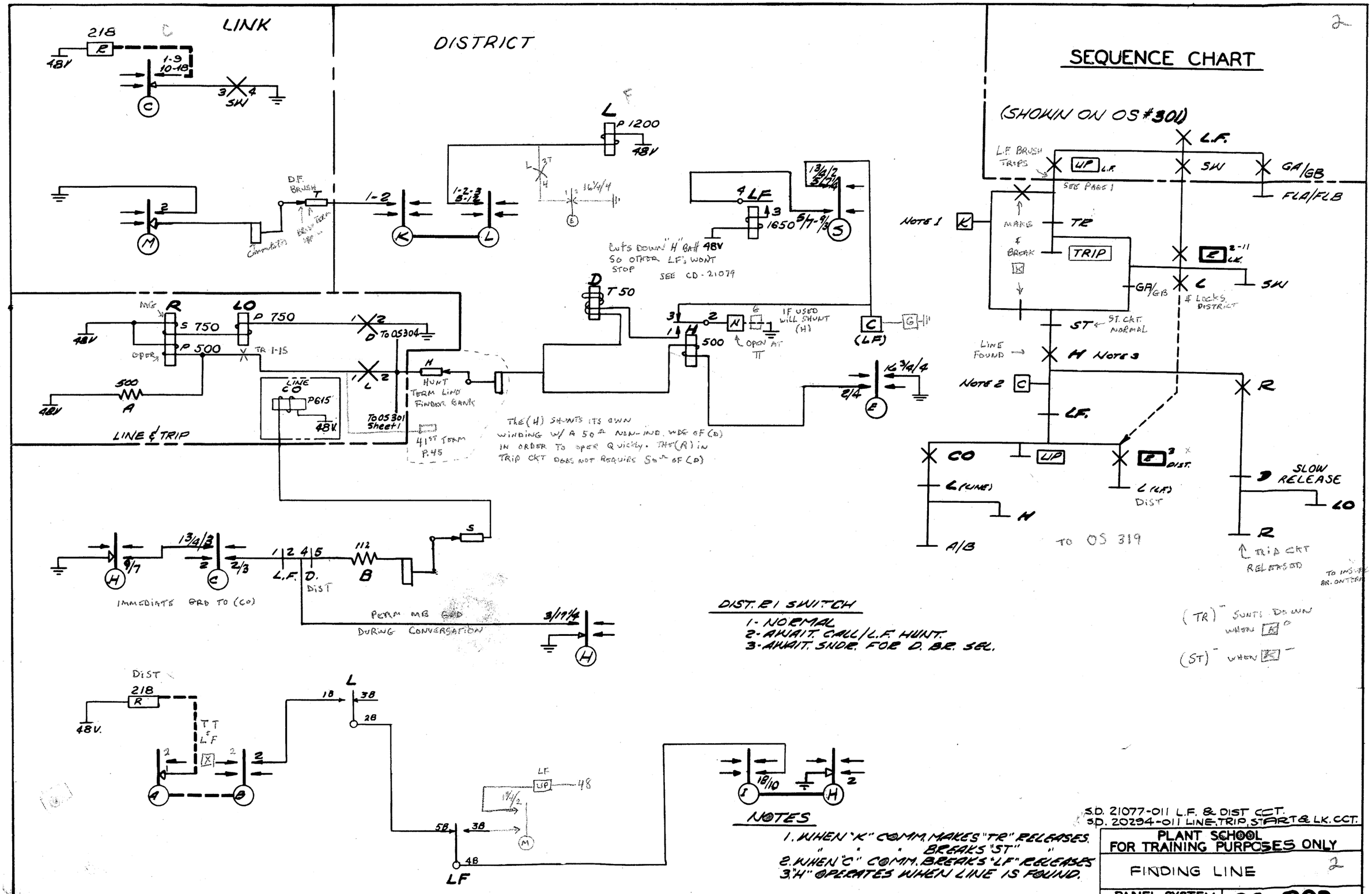

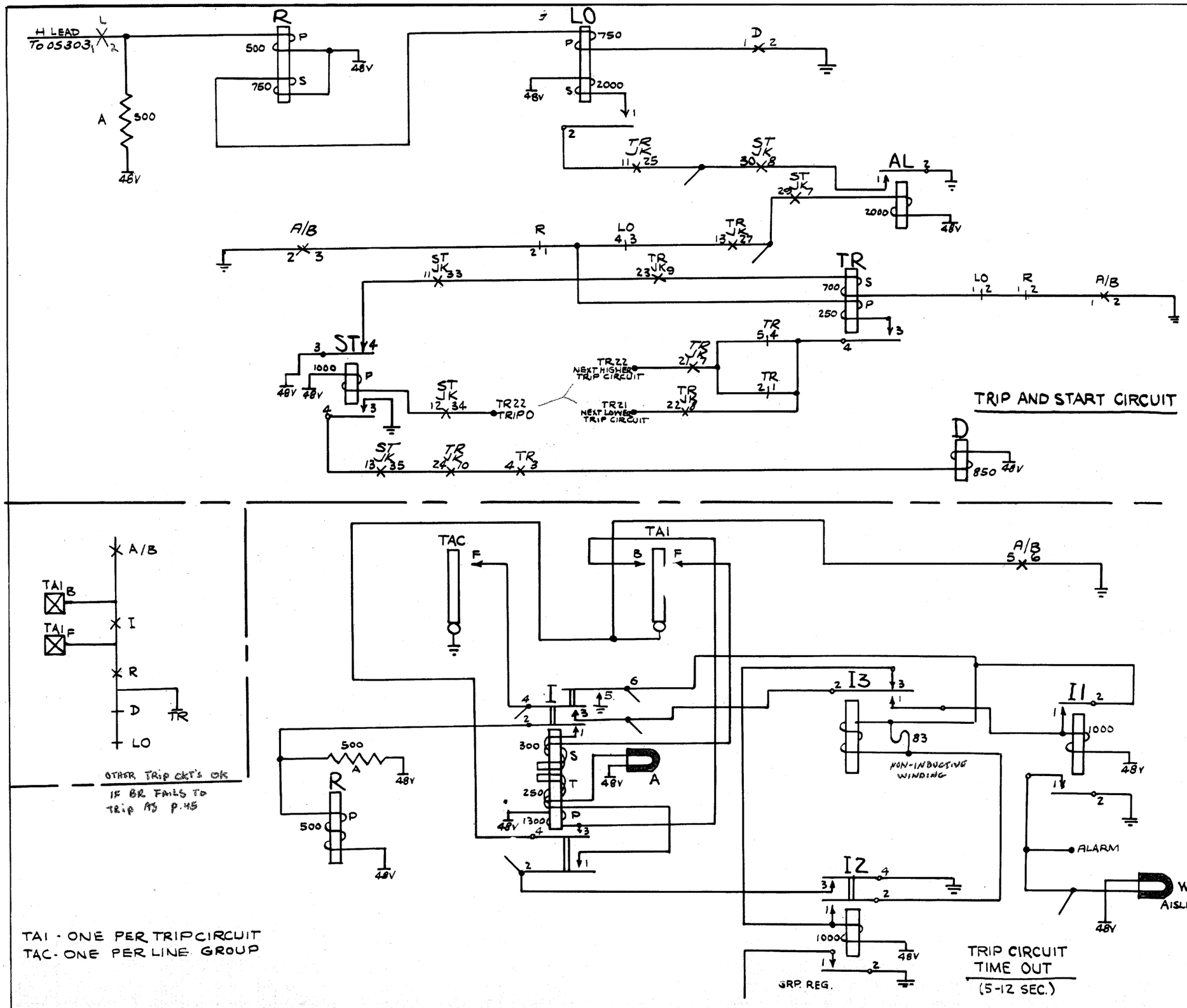

BSP 215-201-305

FAILURE A/B SUB GROUPS (START CCT.)

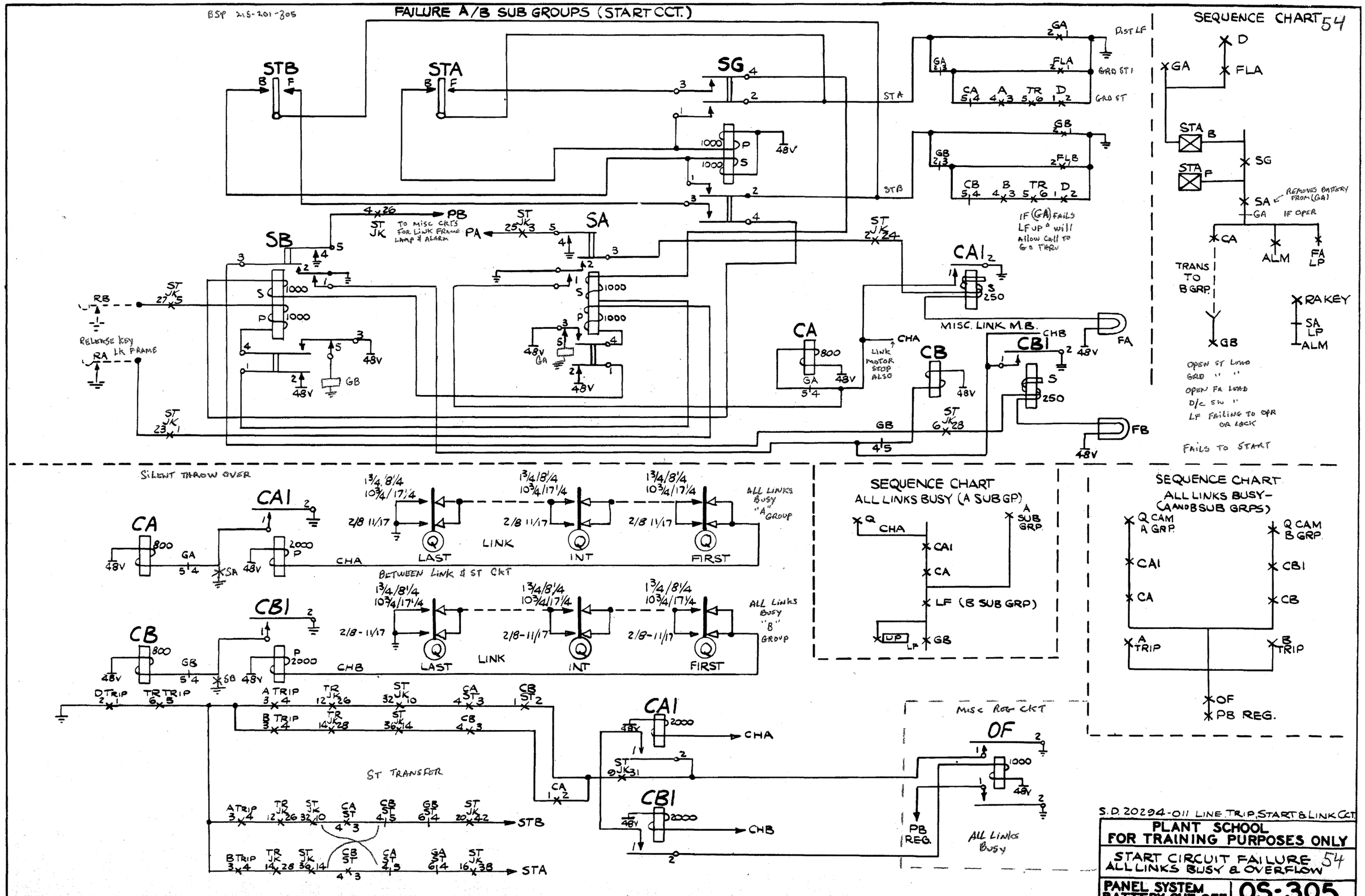

S.D. 20294-011 LINE TRIP, START & LINK CCT.

PLANT SCHOOL
FOR TRAINING PURPOSES ONLY

START CIRCUIT FAILURE
ALL LINKS BUSY & OVERFLOW 54

PANEL SYSTEM
BATTERY CUT-OFF

OS-305

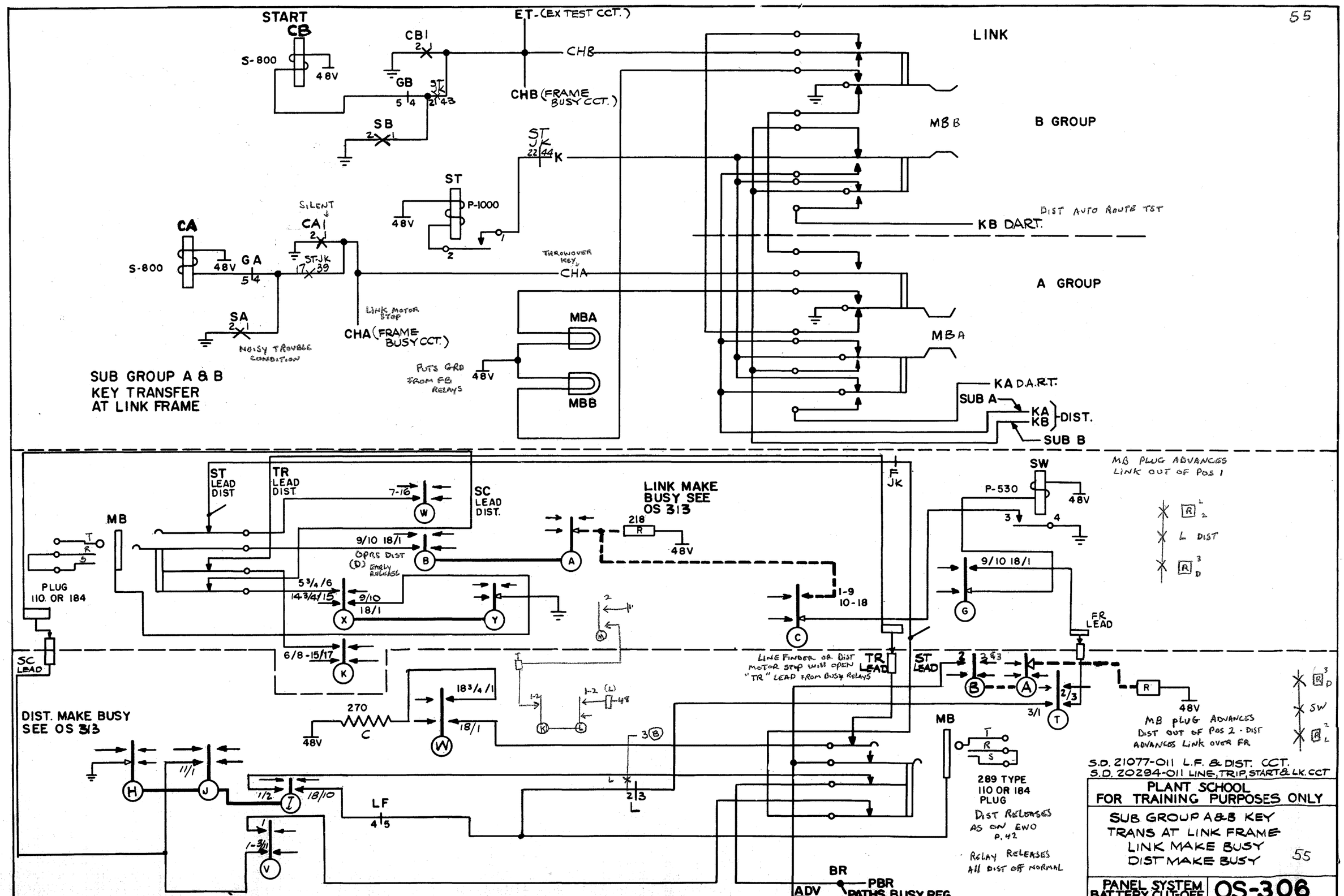

ISSUE 1
JAN. 1950

19

SEQUENCE CHART

TO: CHECK FOR CROSSES IN COUNTER RELAYS
- TOOTHPICK OPR (RL) & (MB)
- GRD TOST REL-TOUCH MAKE CONTACT OF COUNTER, COUNTER & PRIME WILL OP ONLY
- GRD BACK CONTACT OF PRIME COUNTER & ASSOCIATED COUNTER WILL OP.
- GRD 5' TO OP O COUNTER

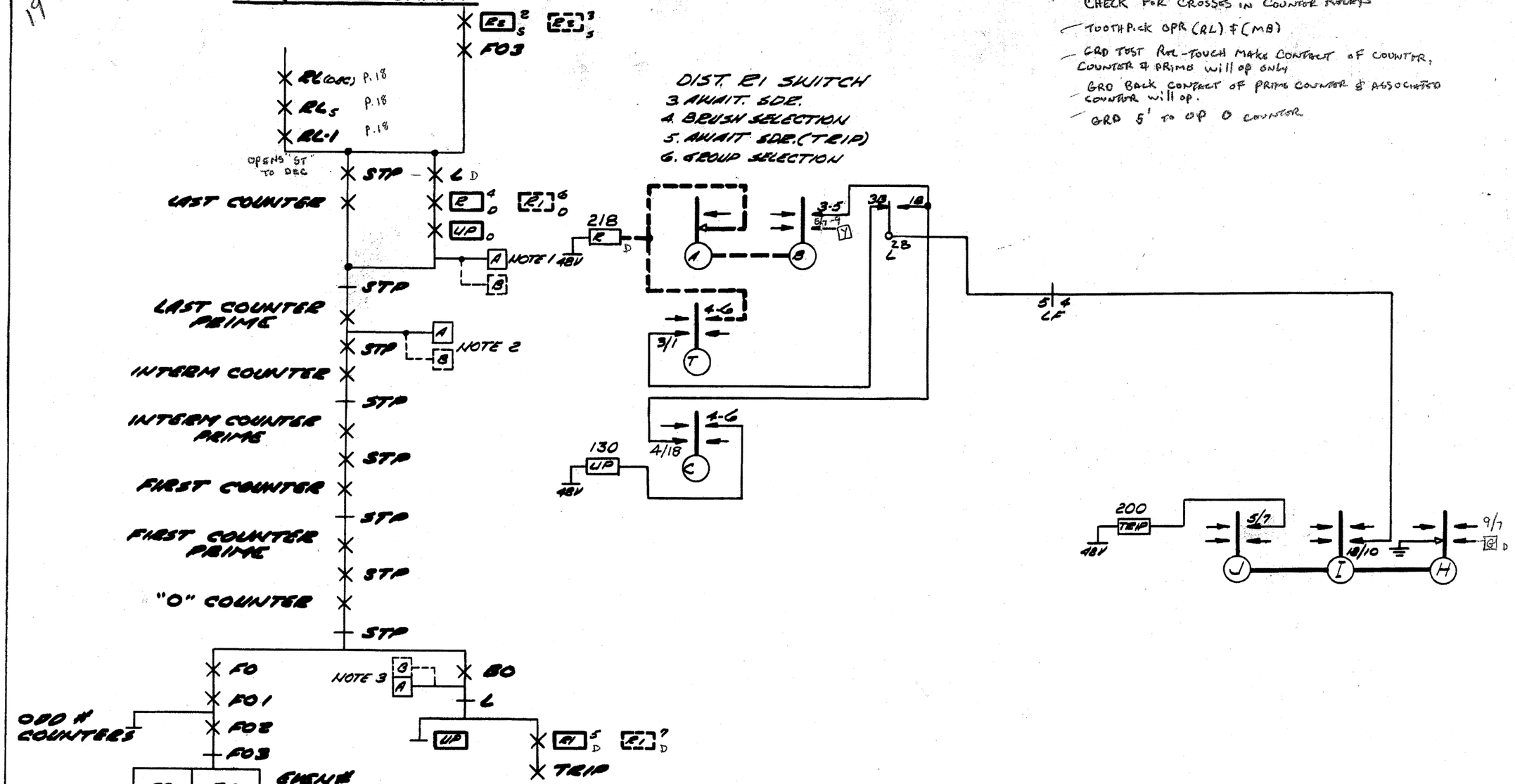

NOTES—

1. GRD ON DIST "A" COMM. HOLDS "L" OPERATED AND SHUNTS DOWN "STP" RELAY OVER "FT" LEAD.
2. WHEN "A" or "B" COMM. HITS METAL SEGMENT "STP" RELAY RELEASES, WHEN IT HITS INSULATED SEGMENT SHUNT IS REMOVED AND "STP" OPERATES.
3. "A" & "B" COMM. HOLDS "L" RELAY OPERATED UNTIL SELECTOR BOD IS CENTERED FOR BRUSH TRIPPING.

SOLID LINES ON SEQUENCE CHART DENOTES BRUSH SELECTION
DOTTED " " " " " GROUP

DISTRICT

PLANT SCHOOL
FOR TRAINING PURPOSES ONLY

DISTRICT BRUSH AND GROUP SELECTION

PANEL SYSTEM BATTERY CUT-OFF **OS-307**

SHEET 1 OF 2

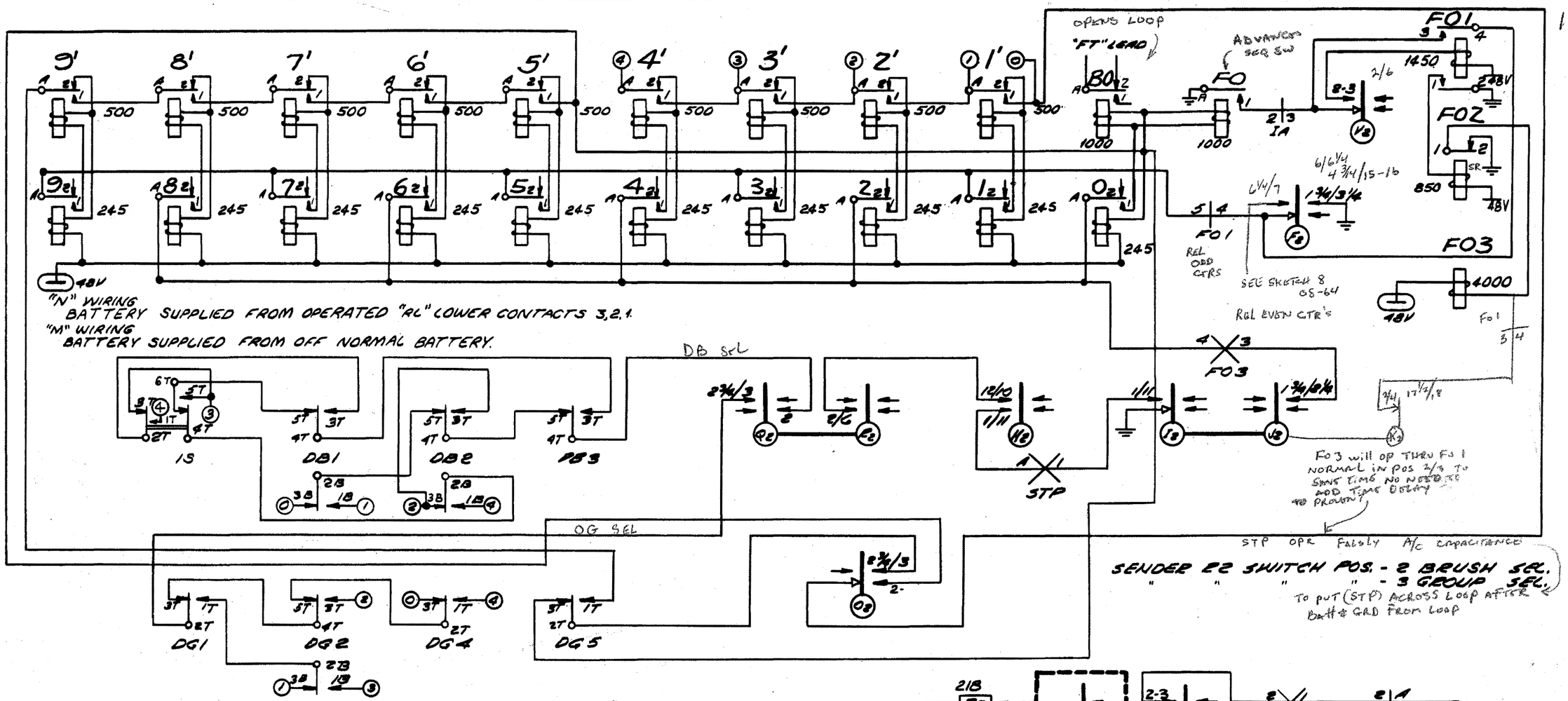

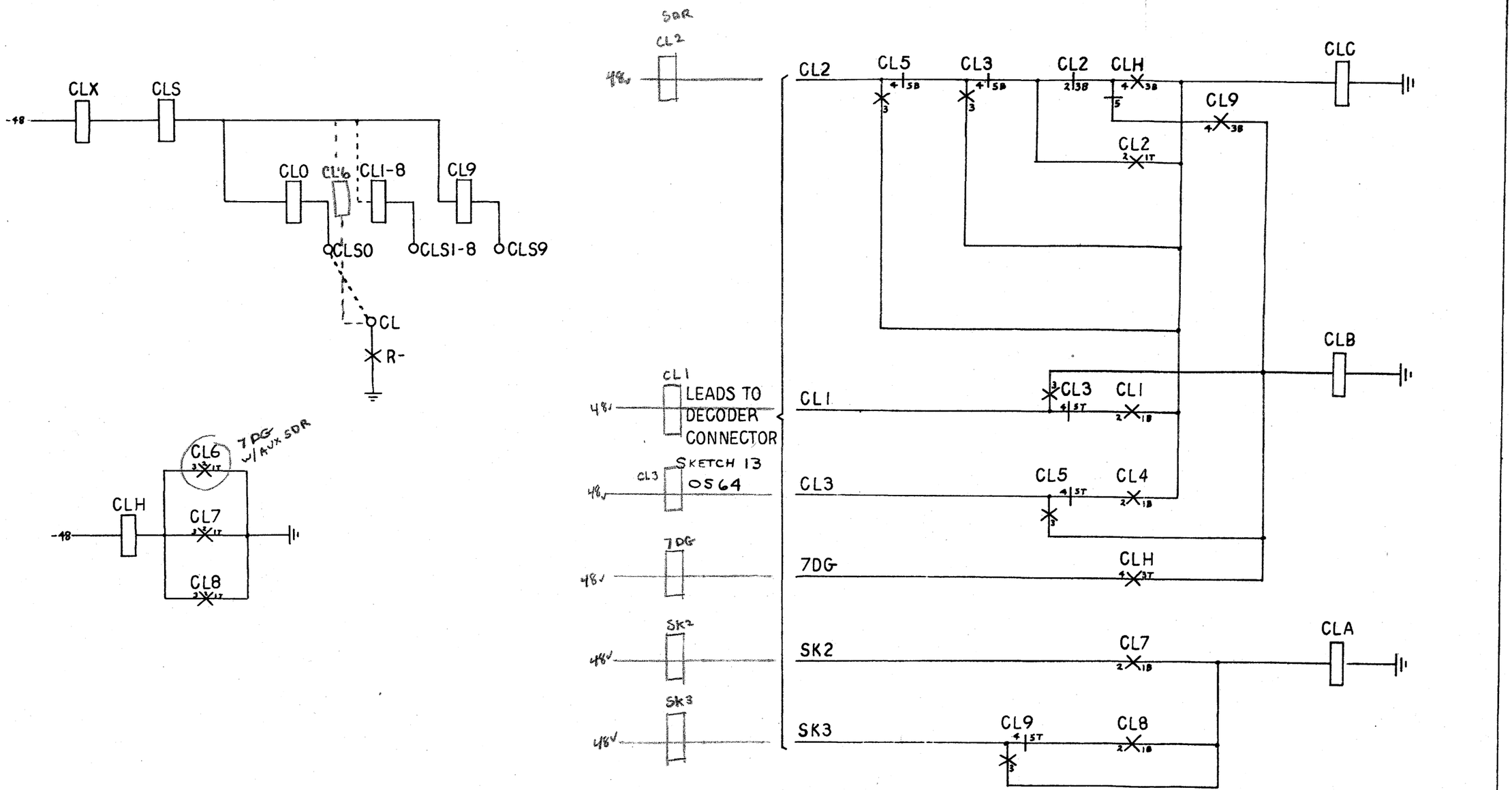

NOTE: CLO - NO CHECK RELAY OPER. OTHER CLASS RELAYS IDENTIFIED BY PATH OF CLA-CLB-CLC RELAYS. ASSOCIATE CLH WITH CLASSES 6,7,8.

AD WIRING

PANEL SYSTEMS
DECODER
TRANSMITTING CLASS INFORMATION
DDD FEATURES OS-6N 11B

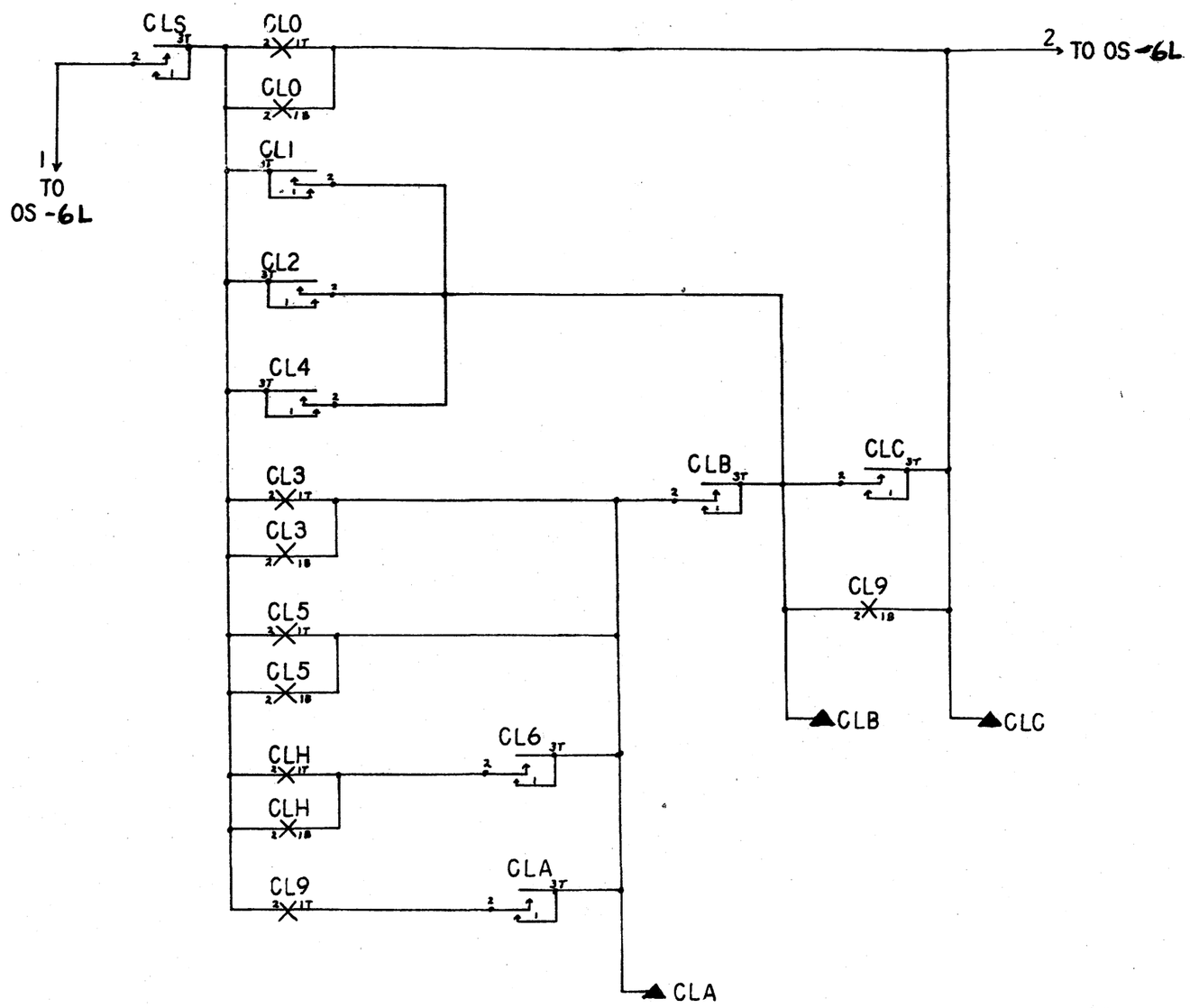

PANEL SYSTEMS
DECODER
DDD FEATURES
11C
OS-6P

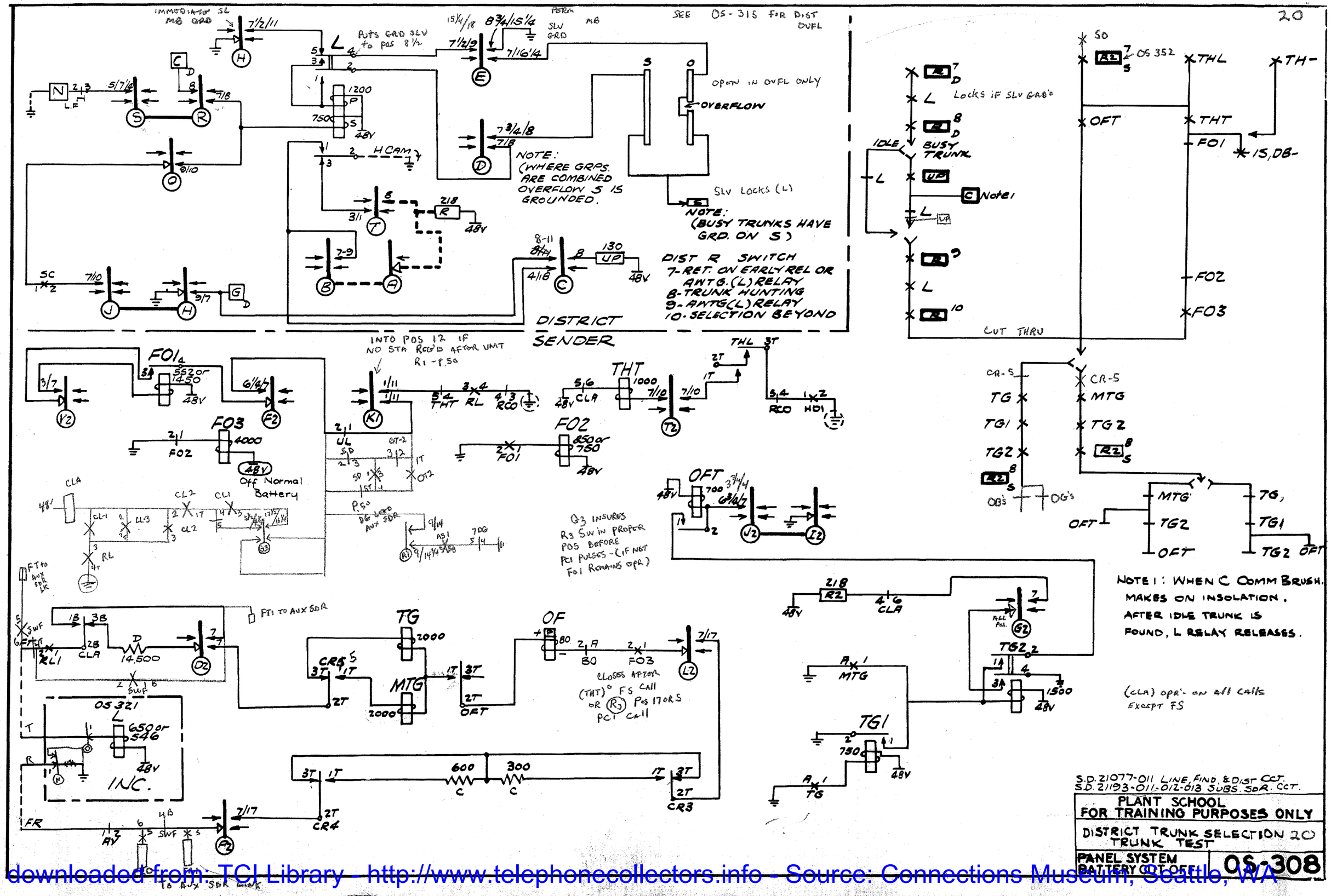

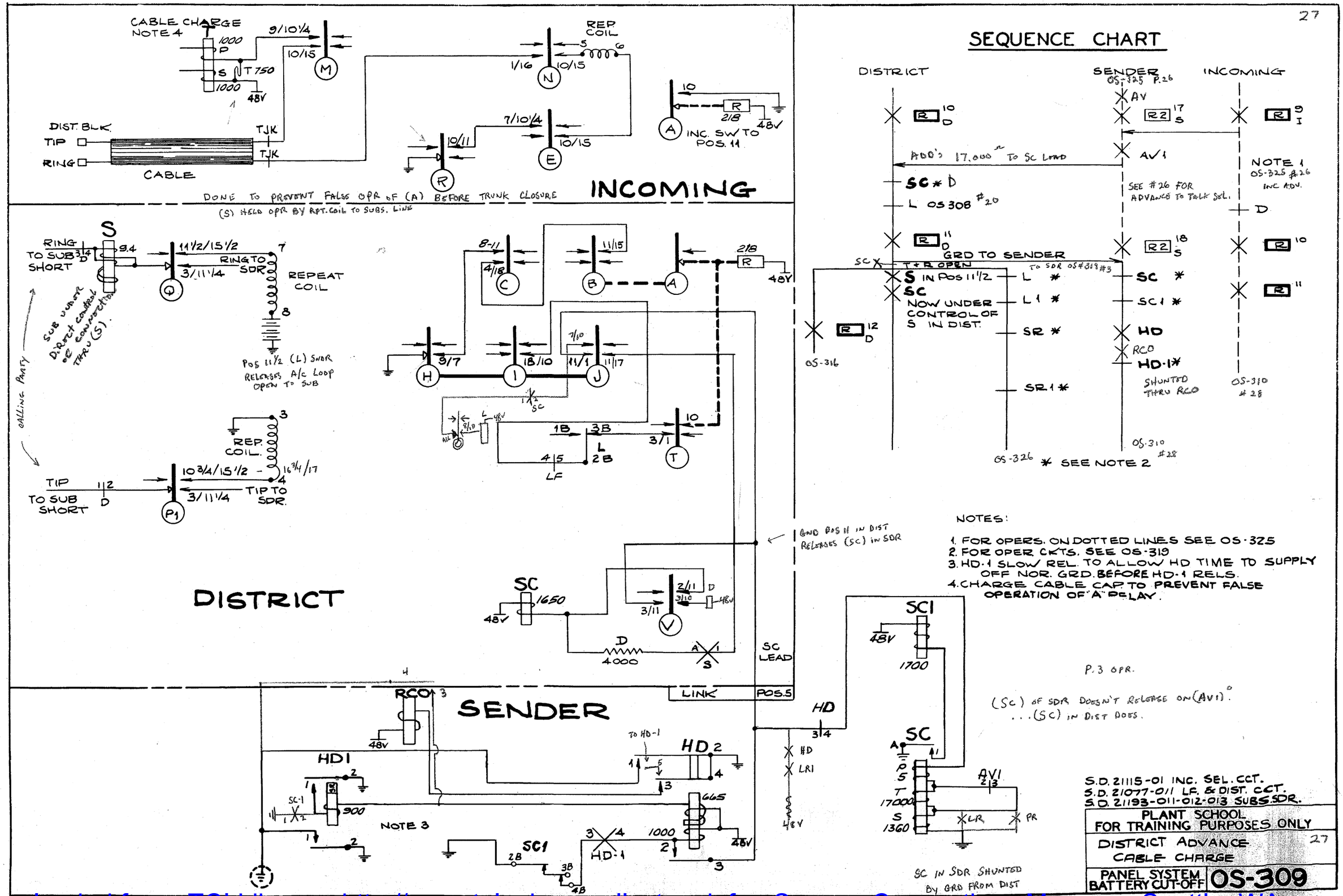

28

SENDER

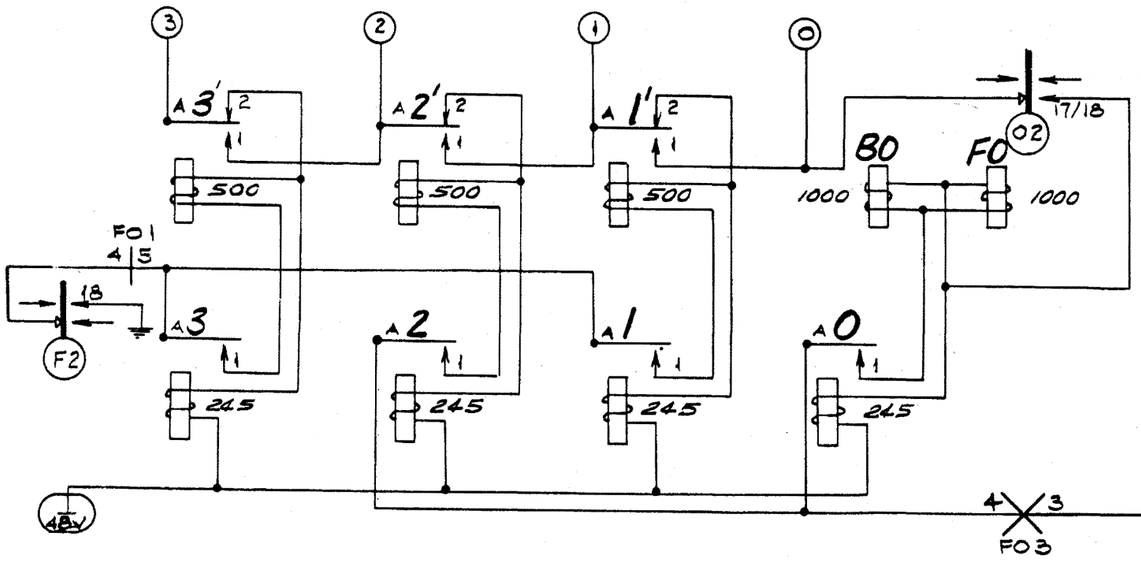

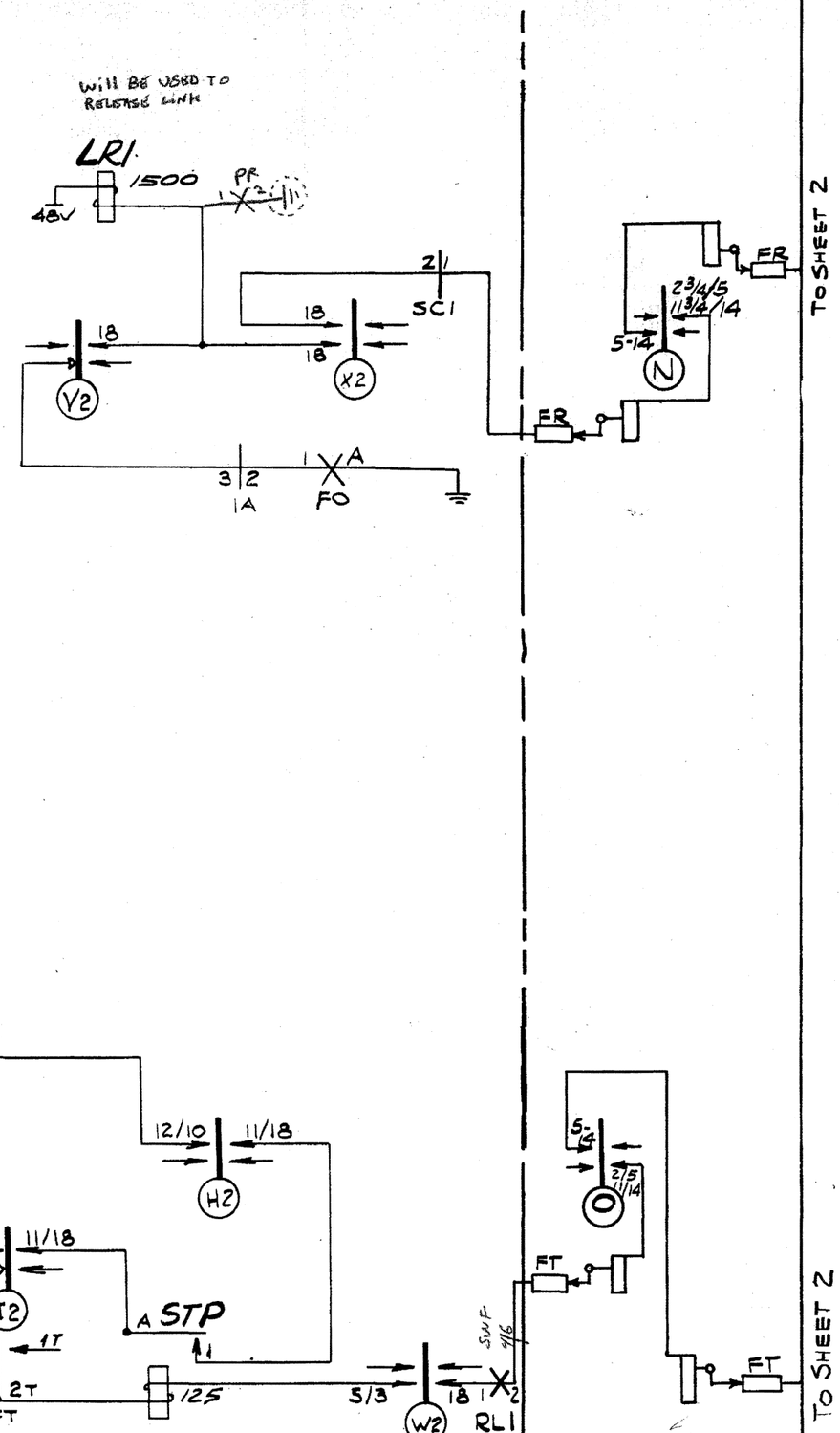

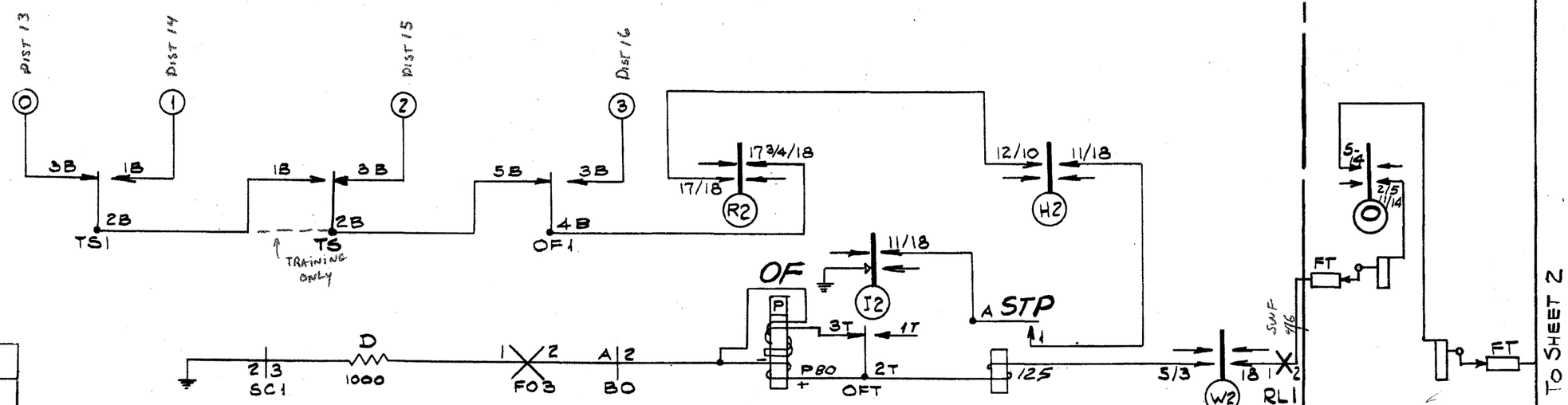

PLANT SCHOOL
FOR TRAINING PURPOSES ONLY

TALK SELECTION AND TRUNK CLOSURE

PANEL SYSTEM BATTERY CUT-OFF

OS-310

SHEET 1 OF 2

NO TST CALL

GROUND OVER TIP OF AC CIRCUIT UNDER CONTROL OF LTD OR OPERATOR
FIN. IN POS 6¾/7 OPR'S (S) IN FINAL.
(TK) DROPS & DOES NOT HOLD TO OPR (S)
SWITCH ROLLS TO 12 IN FINAL & NO
TST IS MADE BY (C) IN POS 10¼, ALLOWING FINAL
TO RIDE ONTO BUSY FINAL # SEE P. 26

(C) WILL NOT OPER IN
POS 7 AS IN NORMAL CALL.

POS 6¾/7
TK
S
[R] 9
[R] 12
C
TK
[R] 13

(C) FAILS TO OPER. IN POS 7 A/C TK RELEASING THEREFORE NO TEST
MADE OF TOL # SLV AS SW. PASSES 10¼

DISCONNECT P. 35
TK
[R] 16
S

NO TEST EQUIP PUTS BATT TO SLV
WITH S° AS SWITCH PASSES POS 15¼ (C) WILL NOT OPR P. 35

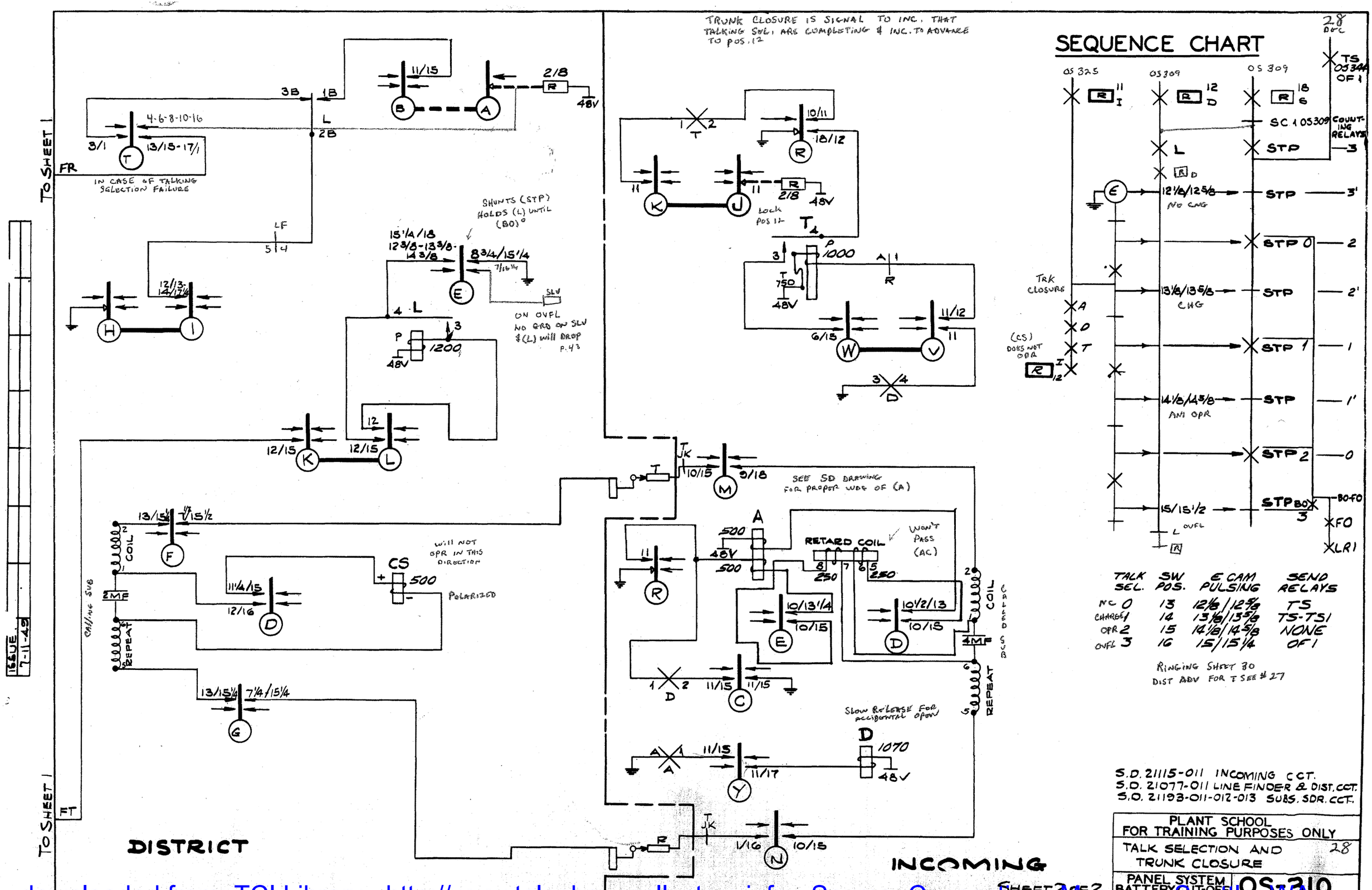

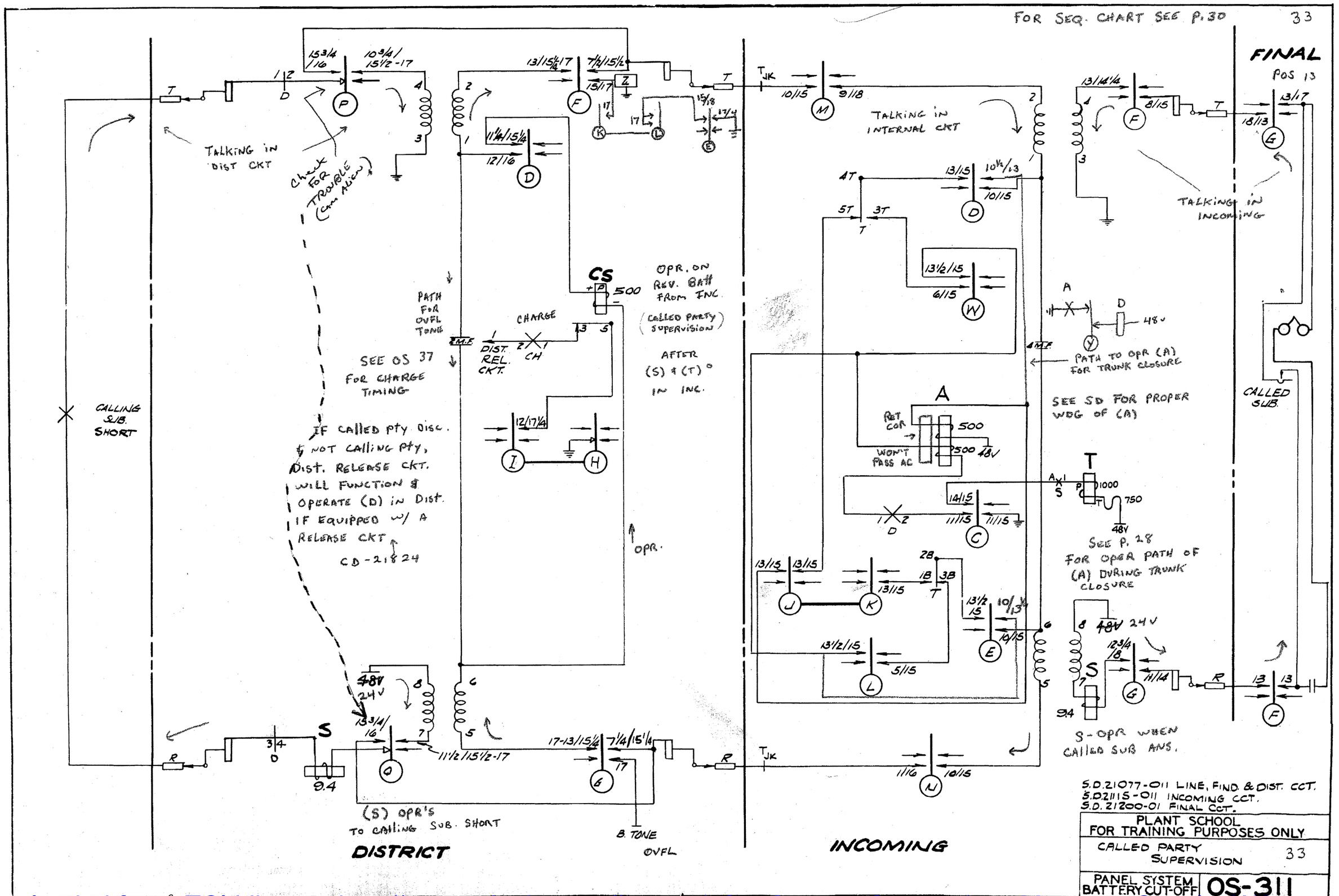

S.D.21077-011 LINE, FIND. & DIST. CCT.
S.D.21115-011 INCOMING CCT.
S.D.21200-01 FINAL CCT.

PLANT SCHOOL
FOR TRAINING PURPOSES ONLY

CALLED PARTY SUPERVISION 33

PANEL SYSTEM BATTERY CUT-OFF **OS-311**

SEQUENCE CHART

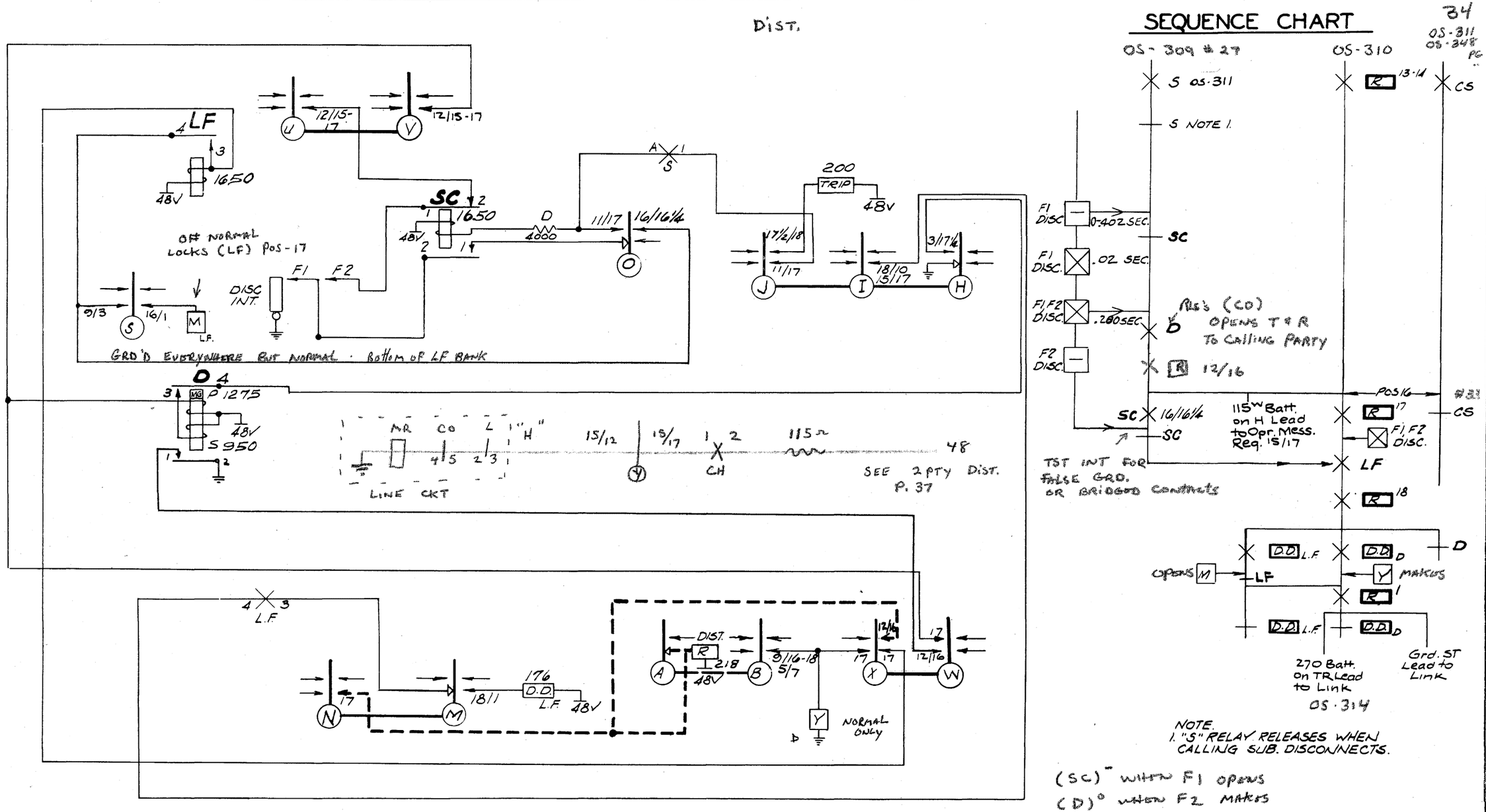

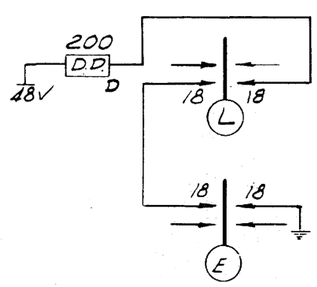

Dist Pos.

14 - CHG
15 - AWAIT OPR
16 - TACK
17 - OVFL
18 - RETURN

} MR CHARGE PERIOD

S.D. 21077-011 LINE, FIND, & DIST CCT.

PLANT SCHOOL
FOR TRAINING PURPOSES ONLY

RELEASE OF DISTRICT CHARGE CALL 34

PANEL SYSTEM BATTERY CUT-OFF **OS-312**

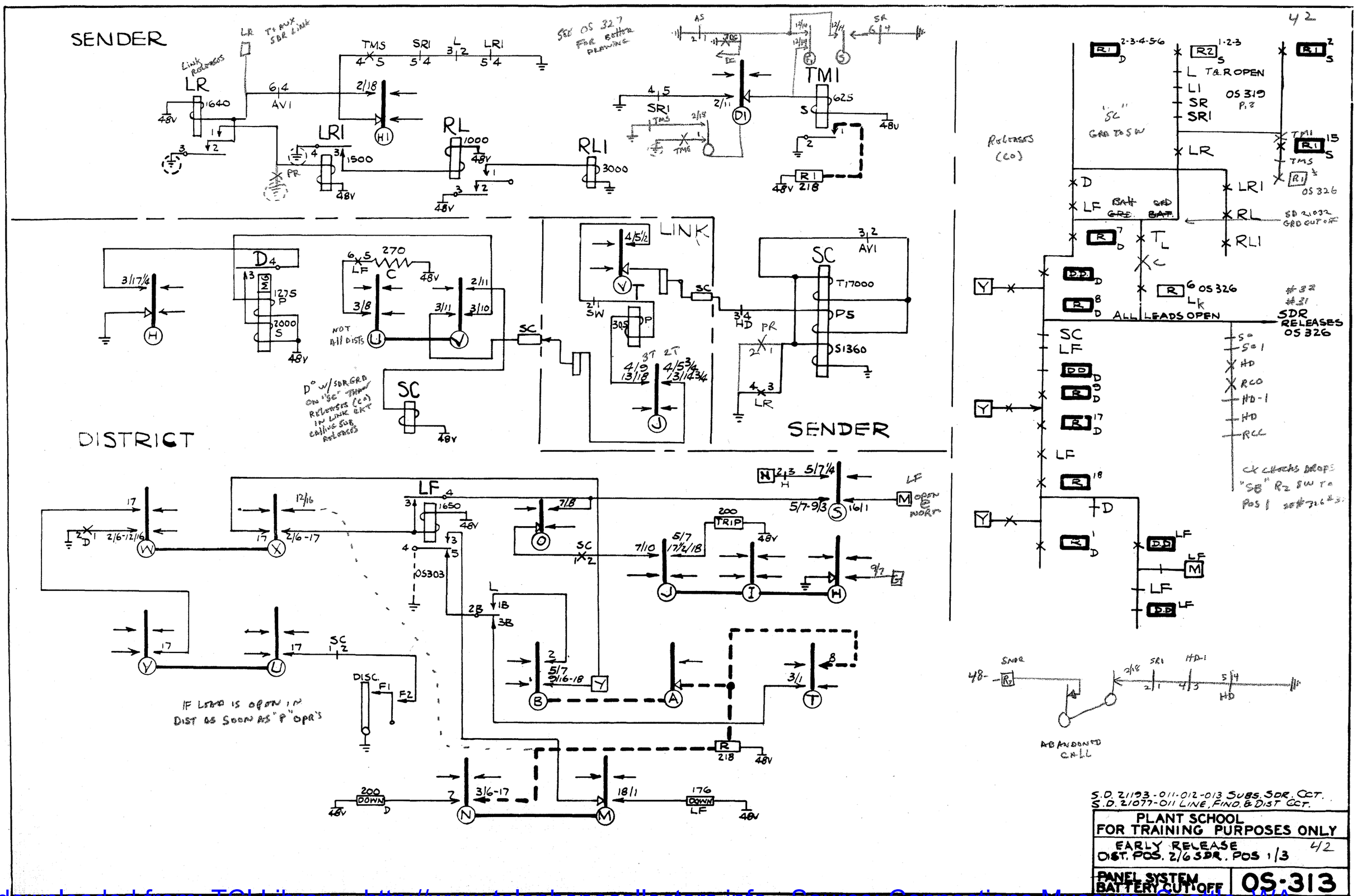

S.D. 21193-011-012-013 SUBS. SDR. CCT.
S.D. 21077-011 LINE, FIND. & DIST CCT.

PLANT SCHOOL
FOR TRAINING PURPOSES ONLY

EARLY RELEASE
DIST. POS. 2/6 SDR. POS 1/3 4/2

PANEL SYSTEM
BATTERY CUTOFF

OS-313

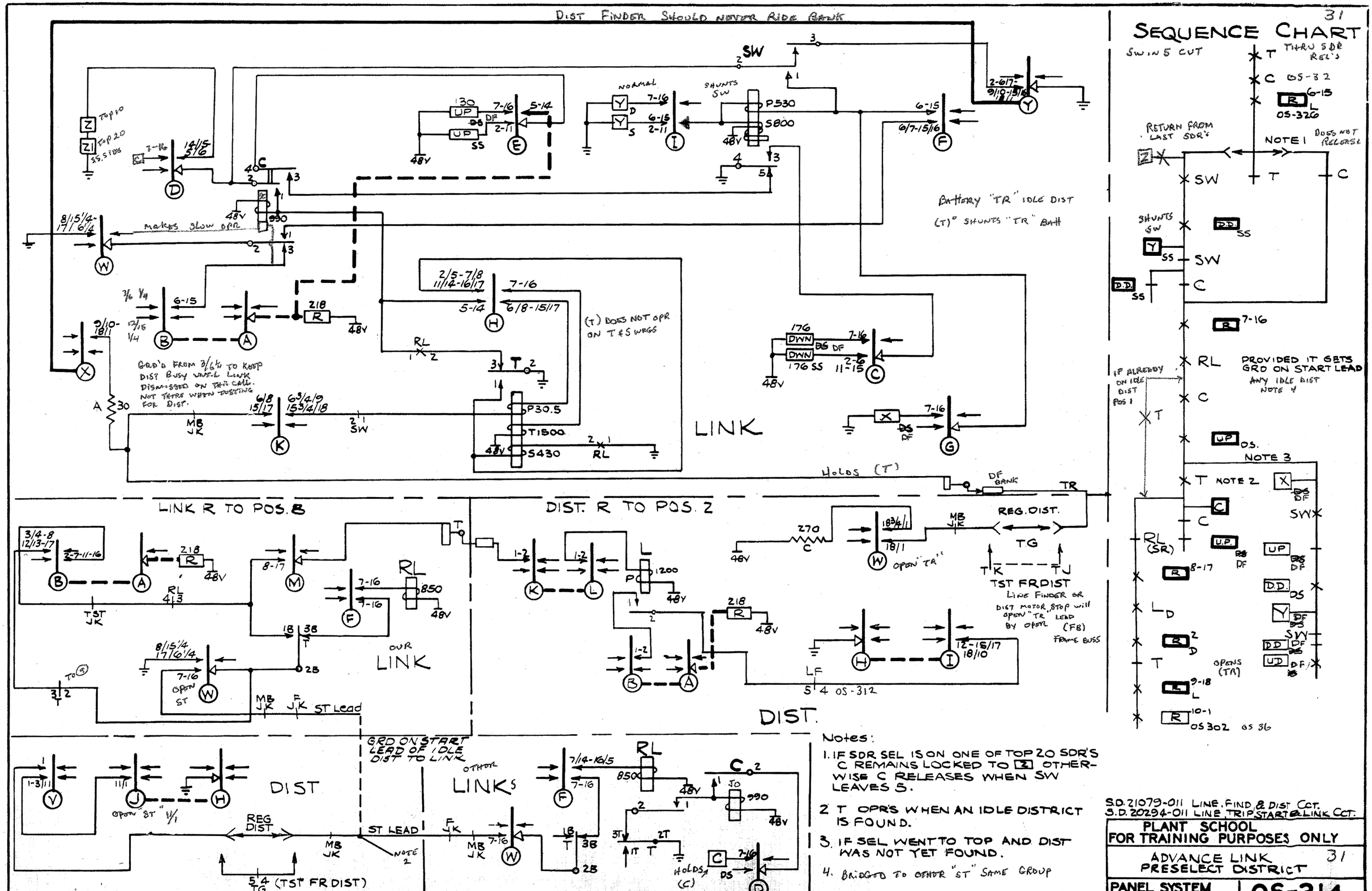

Notes:

1. IF SDR SEL IS ON ONE OF TOP 20 SDR'S C REMAINS LOCKED TO [2] OTHERWISE C RELEASES WHEN SW LEAVES 5.
2. T OPR'S WHEN AN IDLE DISTRICT IS FOUND.
3. IF SEL WENT TO TOP AND DIST WAS NOT YET FOUND.
4. BRIDGED TO OTHER "ST" SAME GROUP

S.D. 21079-011 LINE FIND & DIST CCT.
S.D. 20294-011 LINE TRIP START & LINK CCT.

PLANT SCHOOL
FOR TRAINING PURPOSES ONLY

ADVANCE LINK
PRESELECT DISTRICT

31

PANEL SYSTEM
BATTERY CUTOFF

OS-314

NEED SDS FIRST FOR DIST & SDR

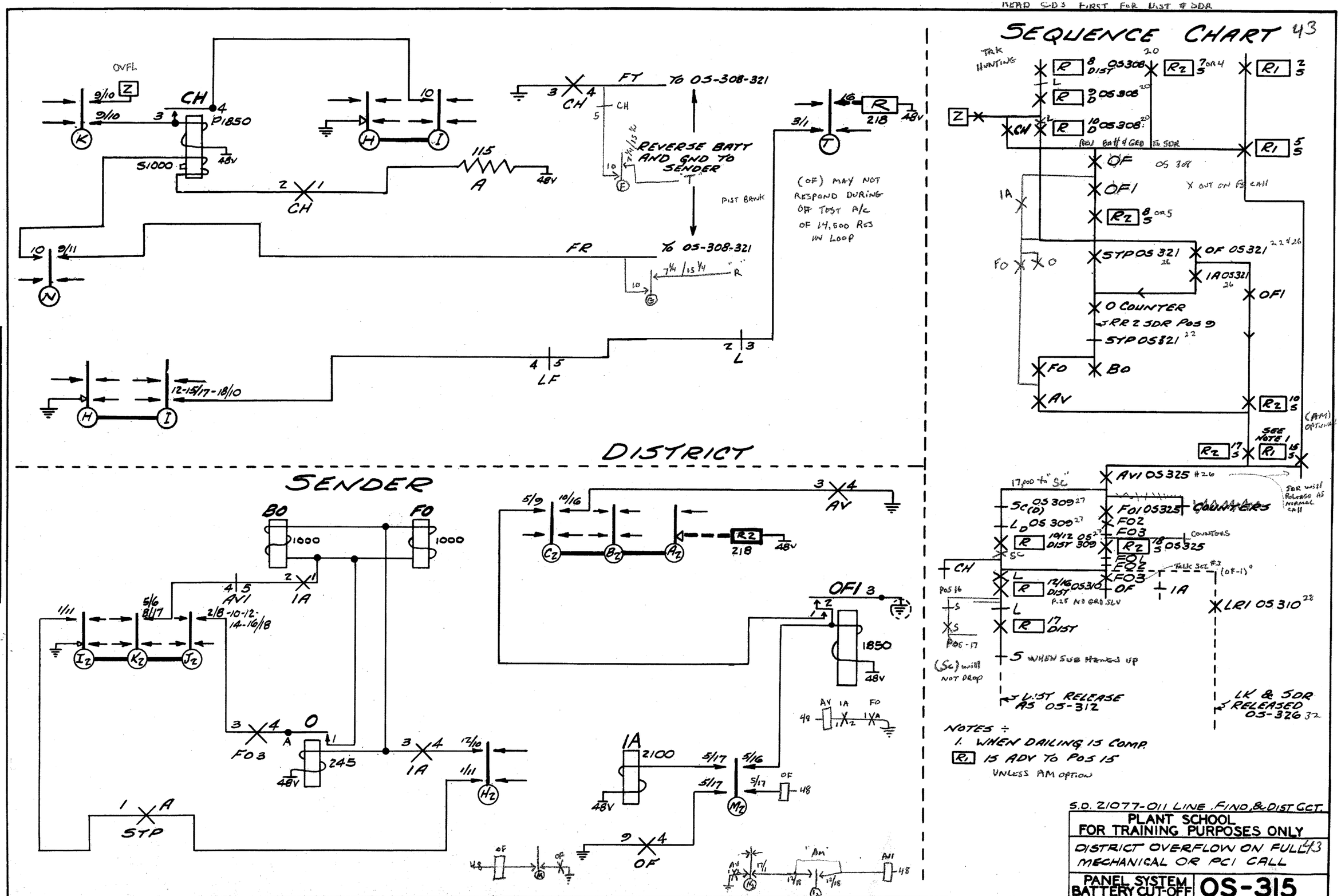

INCOMING TELL-TALE

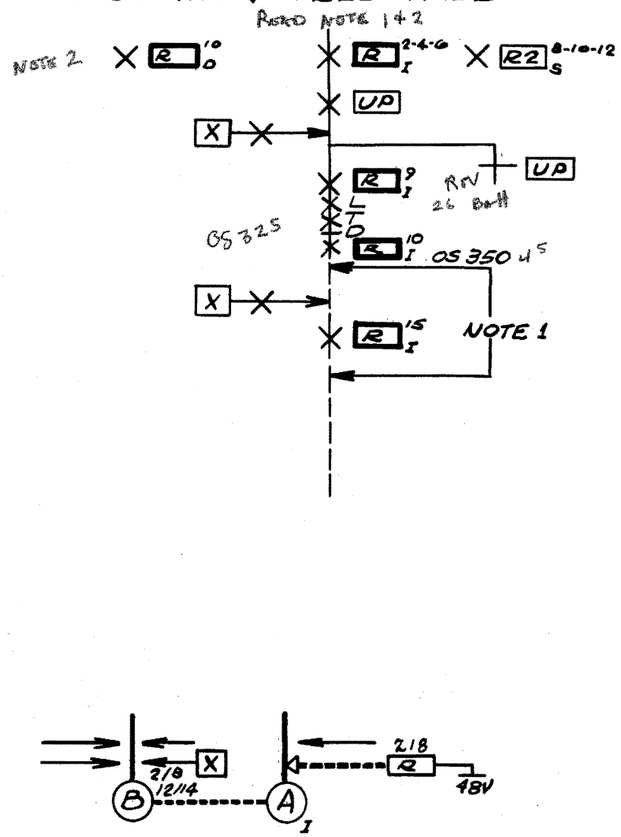

NOTE:

1. WHEN [X] ADVANCES INC. TO POS. 9, OPERATIONS IN SDR., INC. & DISTRICT ARE THE SAME AS OS-350 (INC. OVFL.) EXCEPT [X] ADV. SW. 12/15. # 45

2. INC GOES TO π DUE TO NO COUNT DOWN W/ (LR) IN SDR OPR.

SEE OS-313 FOR (LR) OPER ON ABANDONED CALL OS-330

SEE OS 321 FOR (LR) OPENING COUNTING RELAY PATH

DISTRICT TELL-TALE

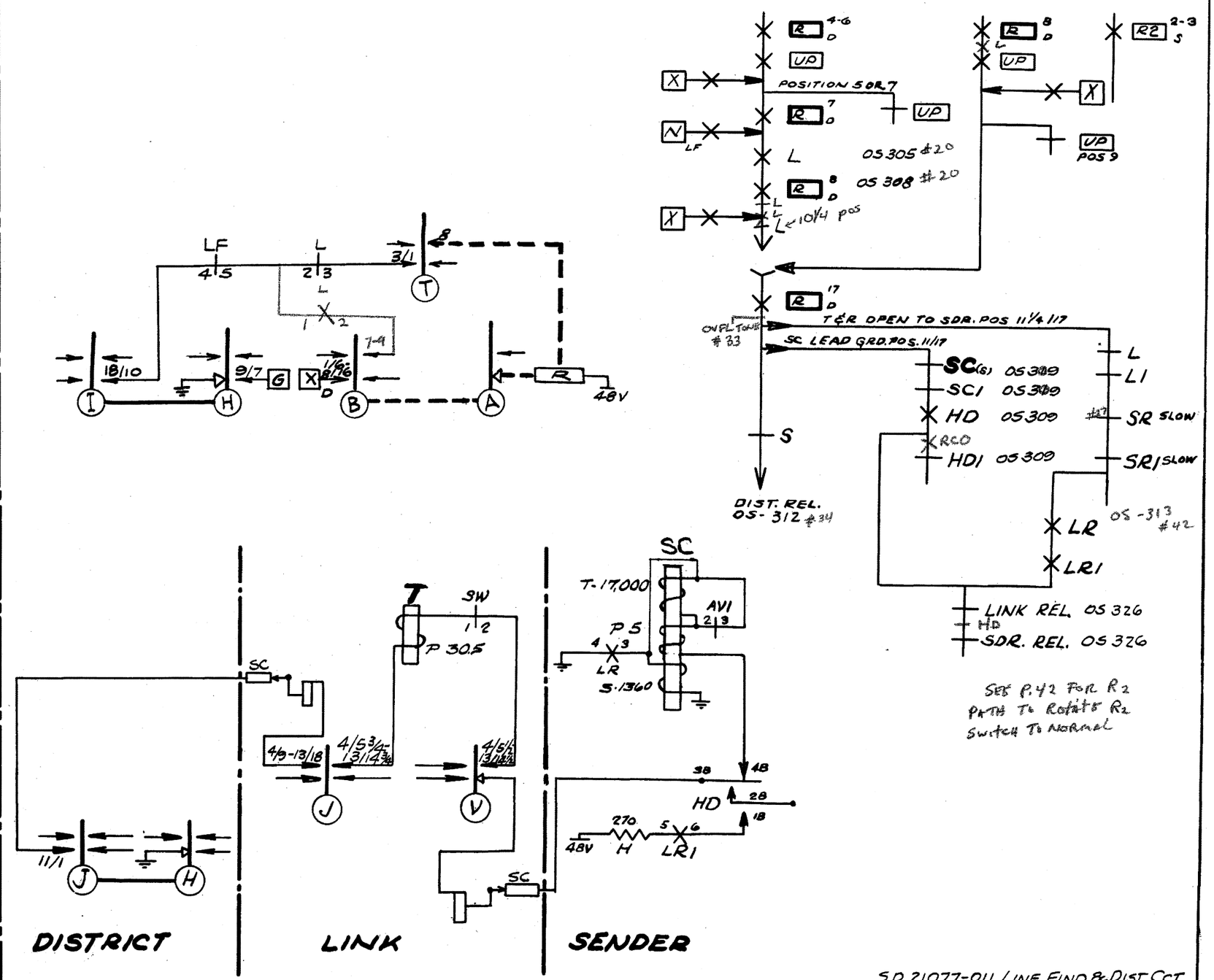

S.D. 21077-011 LINE, FIND & DIST CCT.
S.D. 21115-011 INCOMING CCT.

PLANT SCHOOL
FOR TRAINING PURPOSES ONLY

DISTRICT TELL-TALE 44
INCOMING TELL-TALE

PANEL SYSTEM BATTERY CUT-OFF **OS-316**

ISSUE #. OCT. 18, 1949

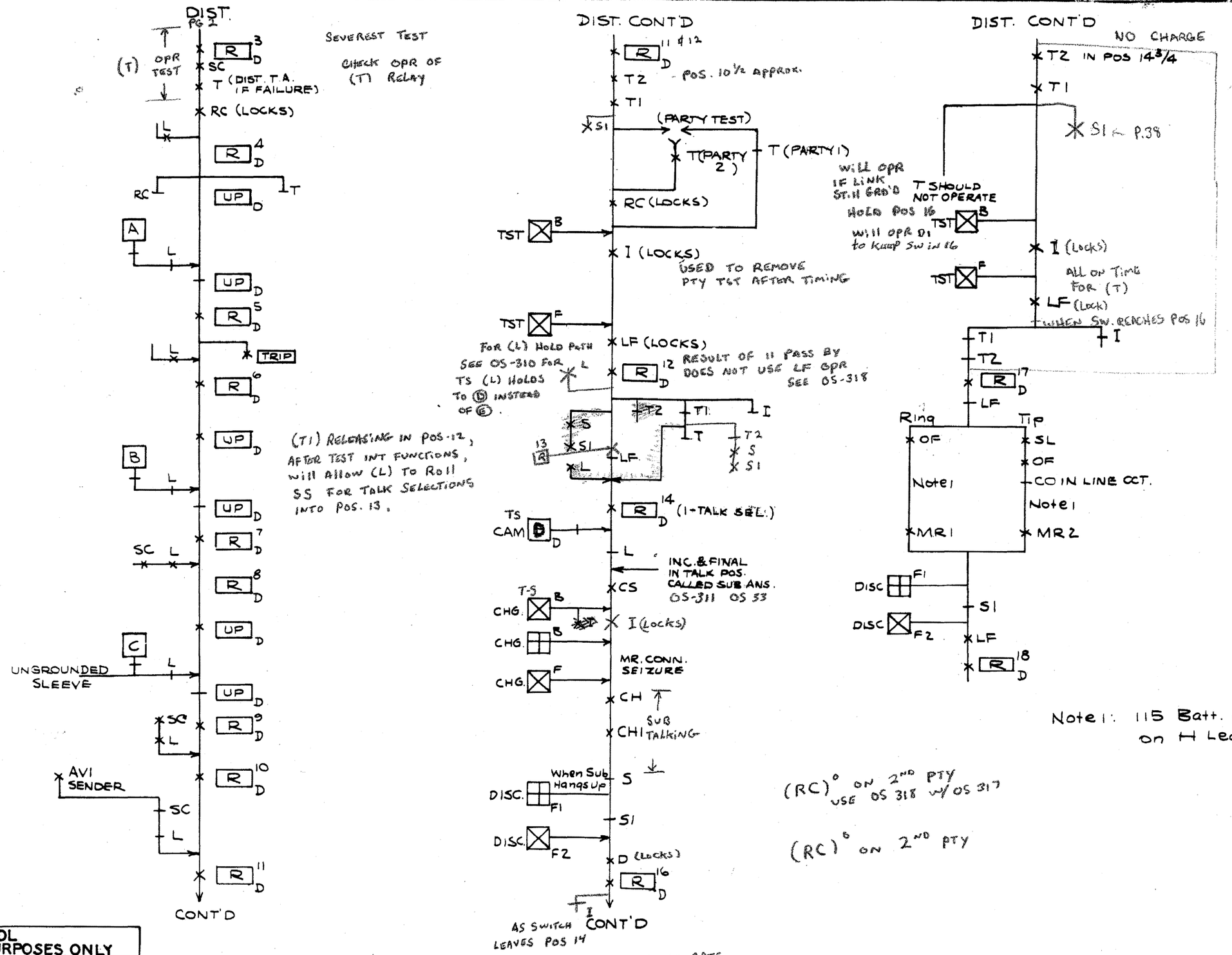

PLANT SCHOOL FOR TRAINING PURPOSES ONLY	
2 PARTY DISTRICT SEQUENCE CHART	37
PANEL SYSTEM BATTERY CUT-OFF	OS 317 Sheet 1 of 2

SEE #33 OR (CS)

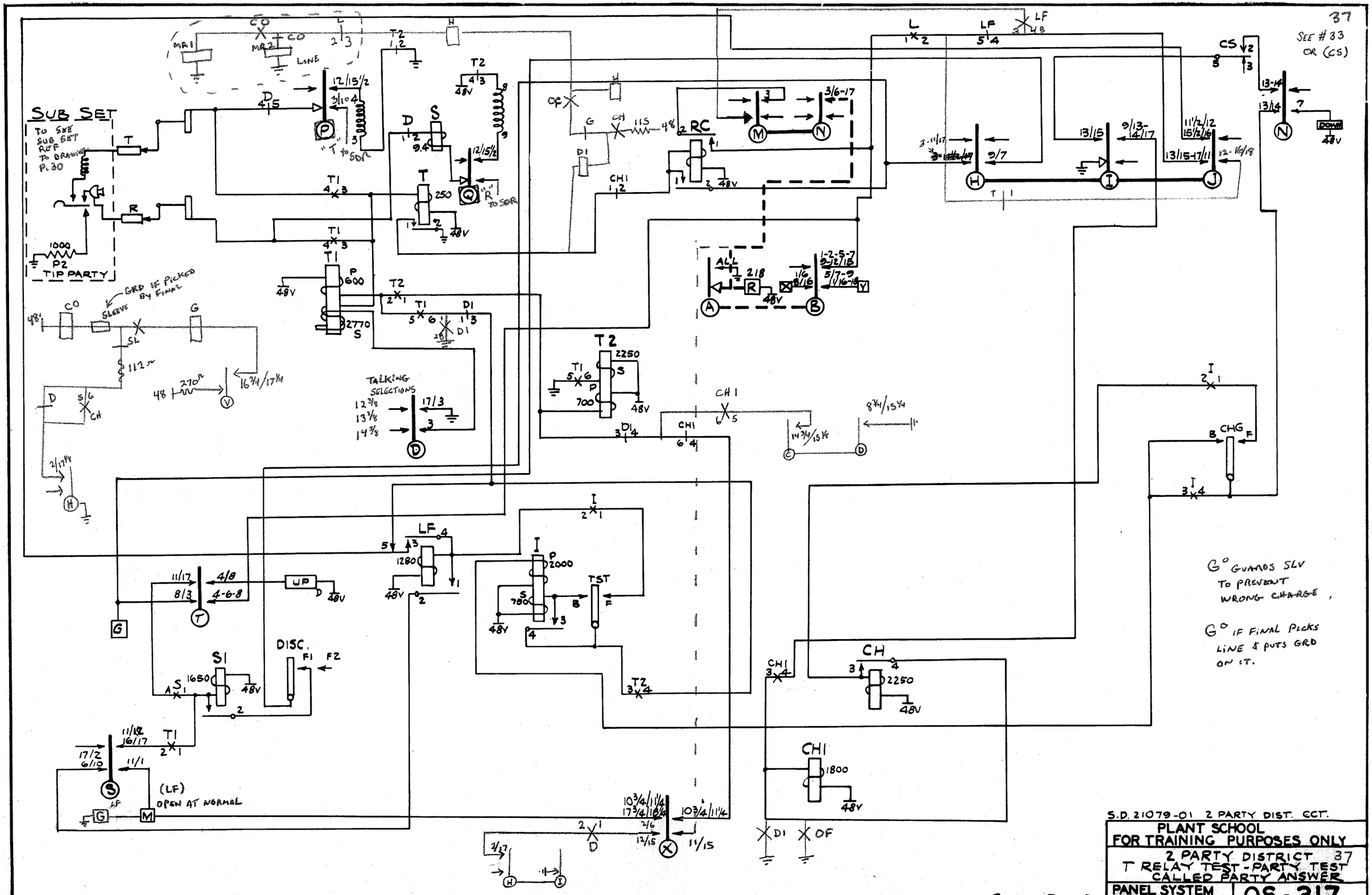

S.D. 21079-01 2 PARTY DIST. CCT.

PLANT SCHOOL FOR TRAINING PURPOSES ONLY

2 PARTY DISTRICT 37
T RELAY TEST - PARTY TEST
CALLED PARTY ANSWER

PANEL SYSTEM BATTERY CUT-OFF

OS-317

SHEET 2 OF 2

38

DISCONNECTION - 2 PARTY

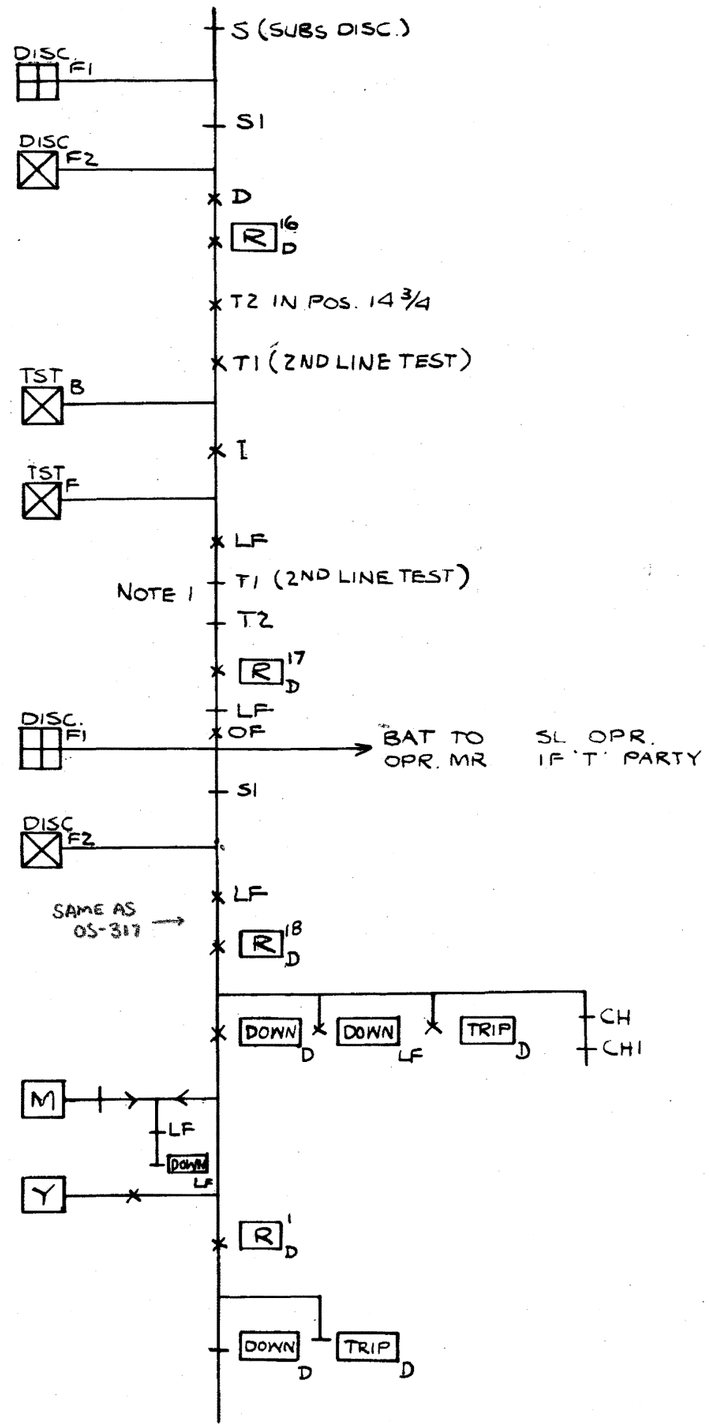

WILL CAUSE DIST TIME ALARM

NOTE 1:
WHEN MAKING SECOND LINE TEST, GROUND DETECTION ON TIP OR RING OF LINE INDICATES LINE TROUBLE. T RELAY OPERATES. R1 SWITCH DIST. IN POS. 16 RESTORE SELECTOR MANUALLY, REFER LINE TROUBLE.

PLANT SCHOOL
FOR TRAINING PURPOSES ONLY

38 2 PARTY DISTRICT
RETURN TO NORMAL

PANEL SYSTEM BATTERY CUT-OFF | OS-318 | SHEET 1 OF 2

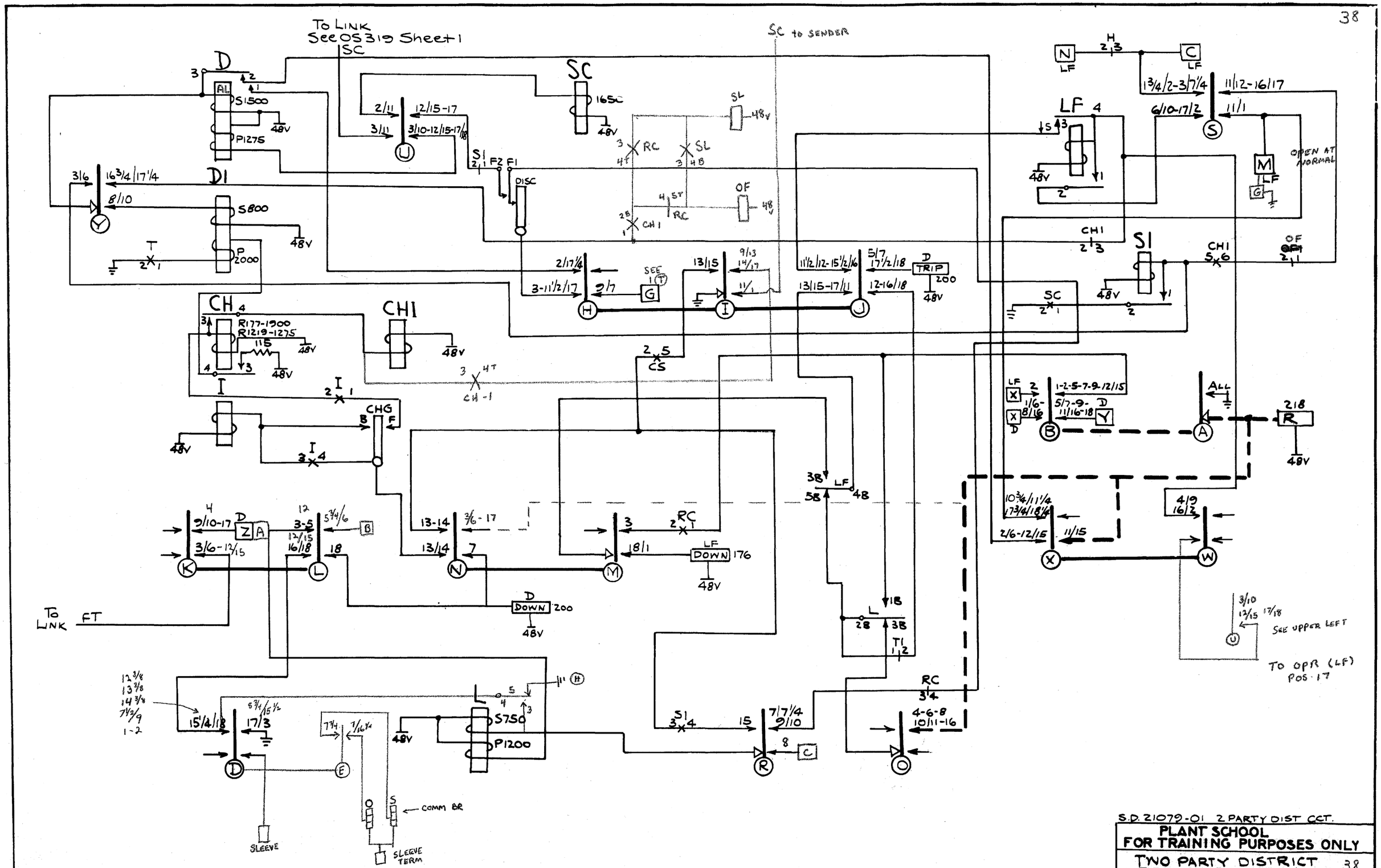

S.D. 21079-01 2 PARTY DIST CCT.

PLANT SCHOOL
FOR TRAINING PURPOSES ONLY

TWO PARTY DISTRICT
RETURN TO NORMAL 38

PANEL SYSTEM
BATTERY CUT-OFF

OS-318

SHEET 2 OF 2

LINE FINDER FRAME
400 TERMINALS

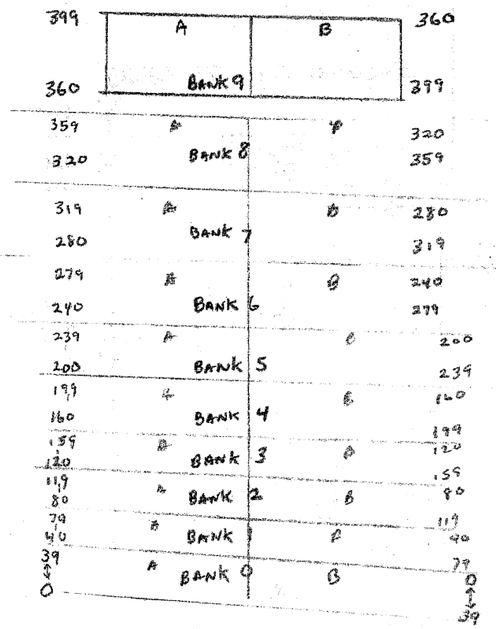

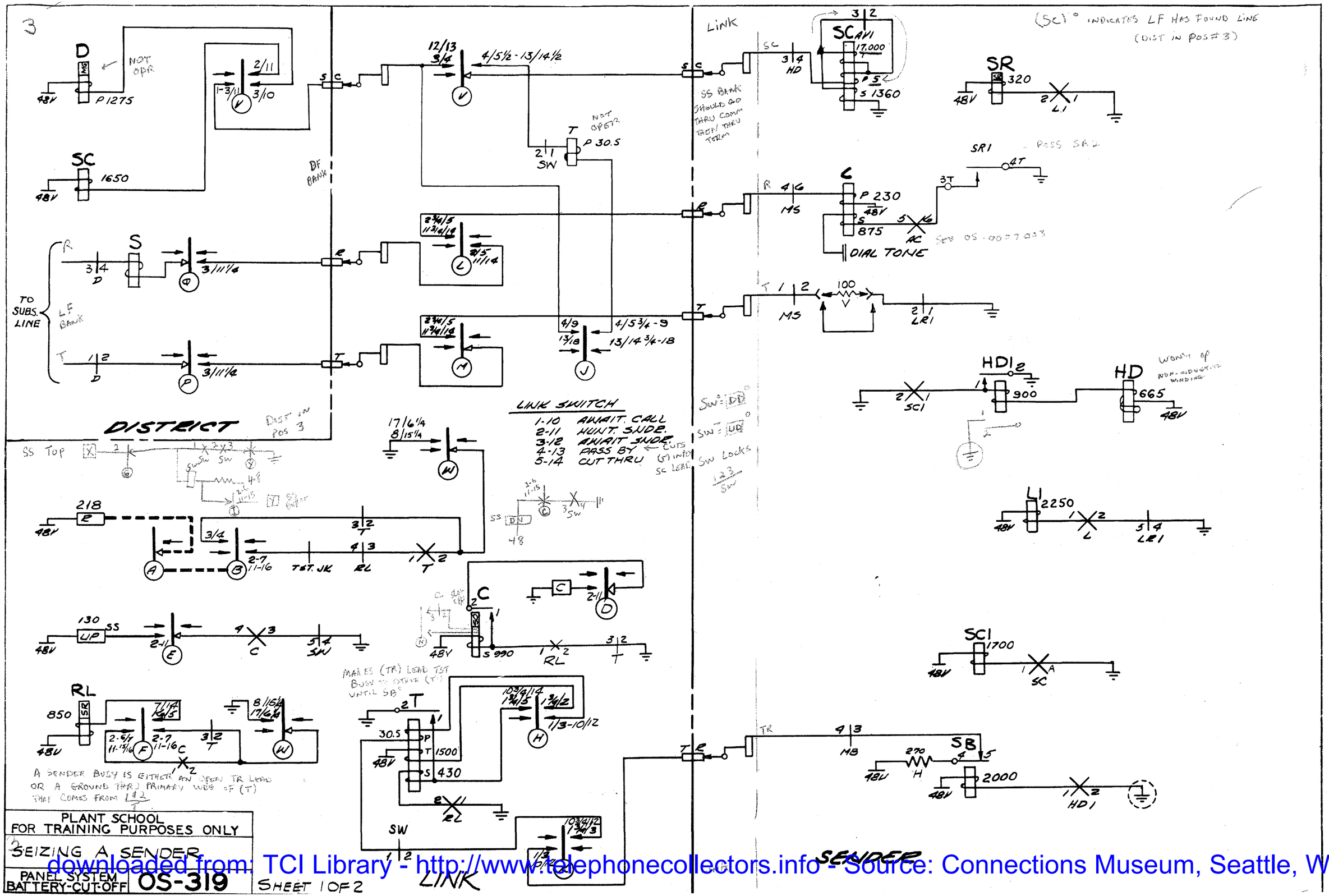

PLANT SCHOOL
FOR TRAINING PURPOSES ONLY

SEIZING A SENDER

PANEL SYSTEM BATTERY-CUT-OFF | OS-319 | SHEET 1 OF 2

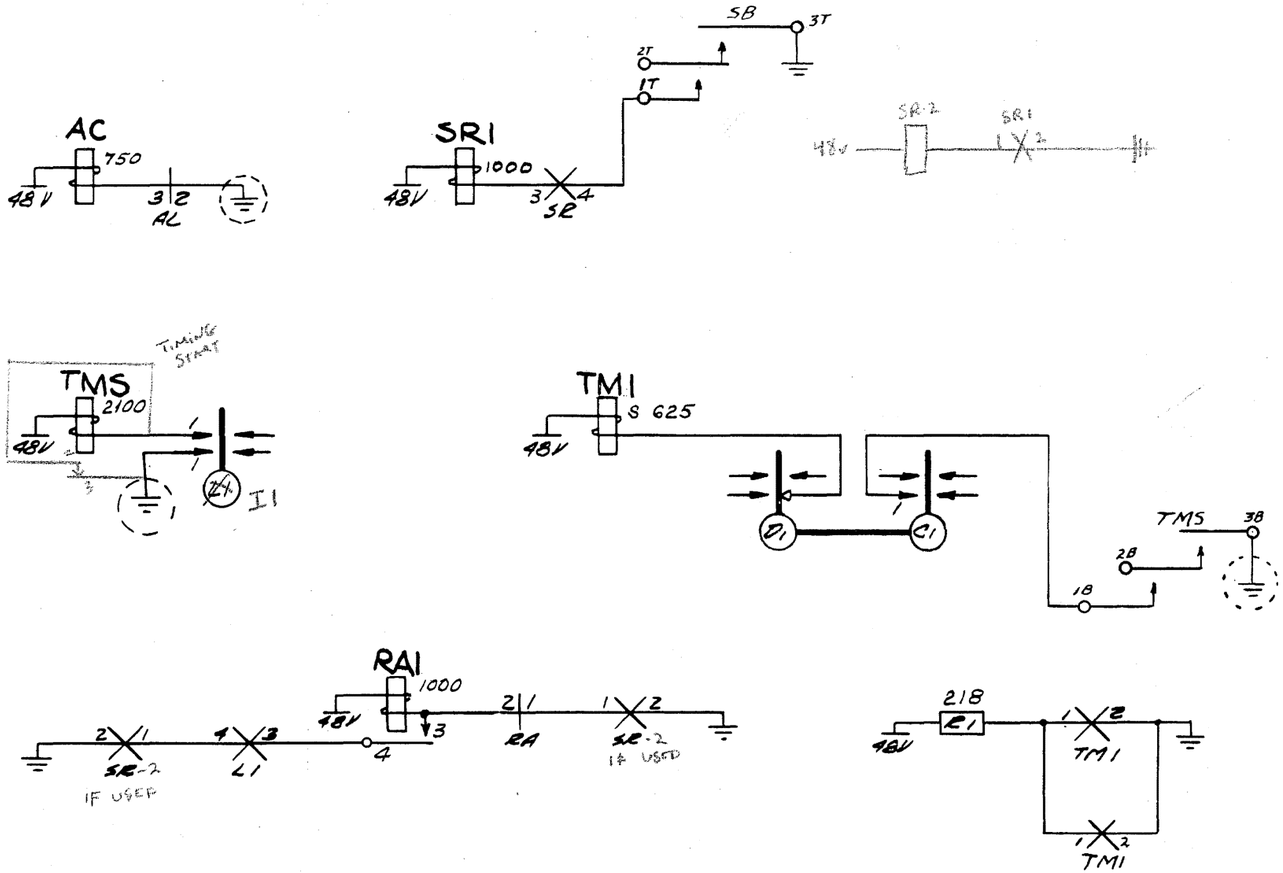

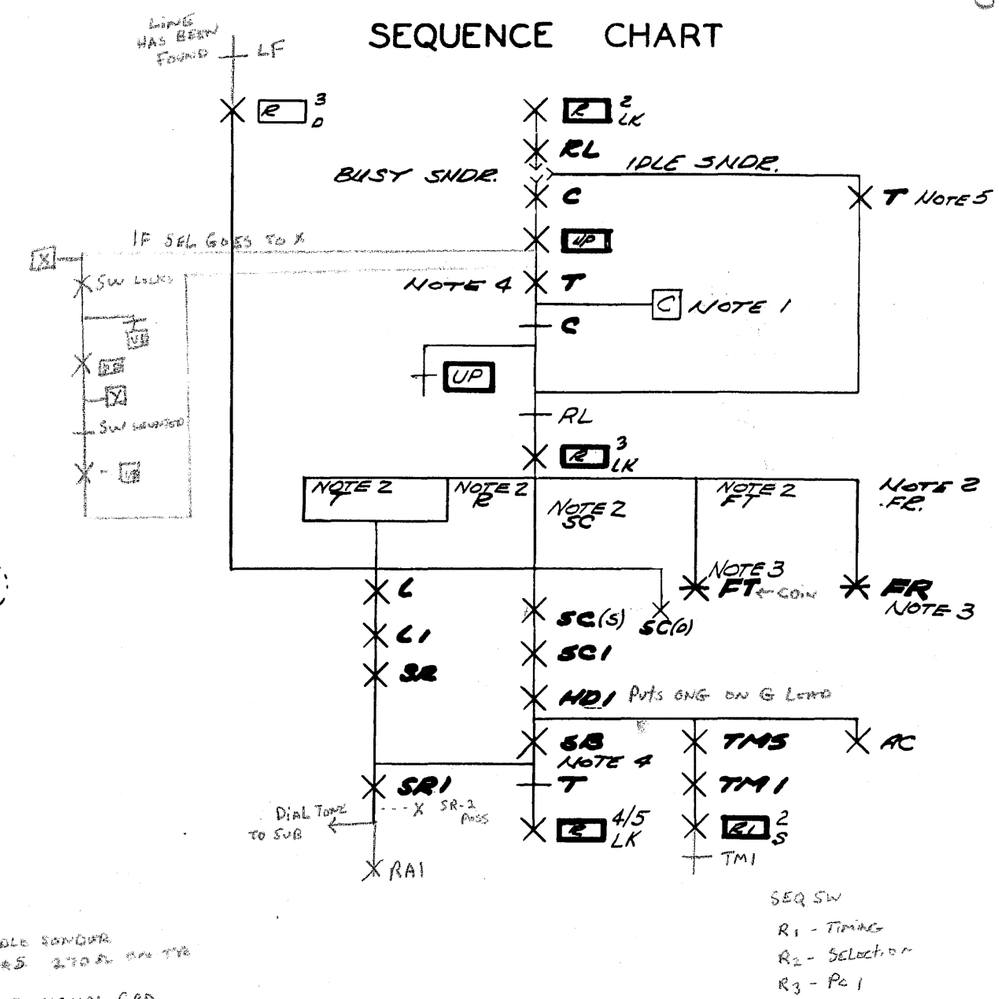

SEQ SW
R_1 - TIMING
R_2 - SELECTOR
R_3 - PC 1

IDLE SENDER HAS 270 Ω ON TR

OFF NORMAL GRD (HD-1) OPR OR ANY SEQ SW OFF NORMAL

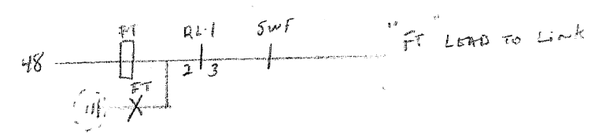

SENDER

NOTE 1 THE COMM. LOCKS THE C RELAY UNTIL THE SELECTOR ROD CENTERS ON THE TERMINAL.

NOTE 2 WHEN THE LINK ADVANCES TO POSITION #3, LEADS T, R, FT, FR, & SC ARE CLOSED THRU THE SENDER.

NOTE 3 THE FT & FR RELAYS & LEADS MAY BE OPEN OR CLOSED DEPENDING UPON THE SUBSCRIBER'S CLASS OF SERVICE.

NOTE 4 WITH THE SB RELAY NORMAL, BATTERY IS SUPPLIED TO THE T RELAY OVER THE TR LEAD. WITH THE SB RELAY OPERATED THIS LEAD IS OPENED & THE T RELAY RELEASES.

NOTE 5 IF ALL SENDERS ARE BUSY THE SELECTOR WILL CONTINUE TO RIDE UP UNTIL THE BRUSHES REACH THE TOP OF THE COMM. WHERE THE X SEGMENT WITH GROUND ON IT WILL OPERATE THE SW RELAY TO STOP THE UP-DRIVE & ENERGIZE THE DOWN-DRIVE MAGNET. WHEN THE SELECTOR HAS REACHED THE BOTTOM THE Y SEGMENT WITH GROUND WILL SHUNT DOWN THE SW RELAY AND ENERGIZE THE UP-DRIVE MAGNET AGAIN.

ISSUE 1 2-14-68

S.D. 21193-011-012-013 SUB. SDR. CCT.
S.D. 20294-011 LINK CCT.
S.D. 21077-011 LINE, FIND. & DIST. CCT.

PLANT SCHOOL
FOR TRAINING PURPOSES ONLY

SEIZING A SENDER 3

PANEL SYSTEM BATTERY CUT-OFF OS-319

SHEET 2 OF 2

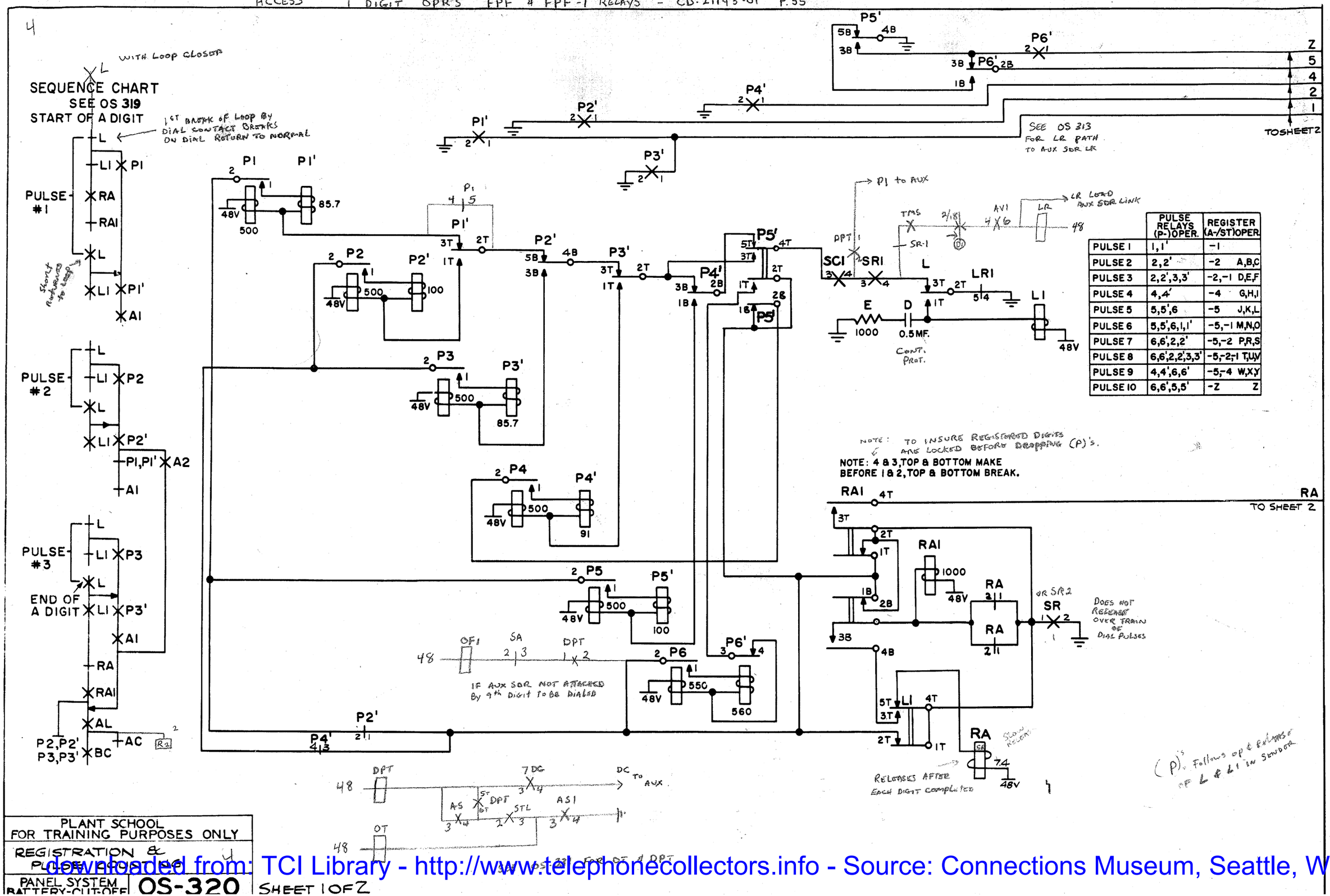

	PULSE RELAYS (P-)OPER.	REGISTER (A-/ST)OPER.
PULSE 1	1,1'	-1
PULSE 2	2,2'	-2 A,B,C
PULSE 3	2,2',3,3'	-2,-1 D,E,F
PULSE 4	4,4'	-4 G,H,I
PULSE 5	5,5',6	-5 J,K,L
PULSE 6	5,5',6,1,1'	-5,-1 M,N,O
PULSE 7	6,6',2,2'	-5,-2 P,R,S
PULSE 8	6,6',2,2',3,3'	-5,-2,-1 T,U,V
PULSE 9	4,4',6,6'	-5,-4 W,X,Y
PULSE 10	6,6',5,5'	-Z Z

ISSUE 1
JAN. 1950

PLANT SCHOOL
FOR TRAINING PURPOSES ONLY

REGISTRATION & PULSE RECEIVING

PANEL SYSTEM BATTERY-CUT-OFF

OS-320

SHEET 1 OF 2

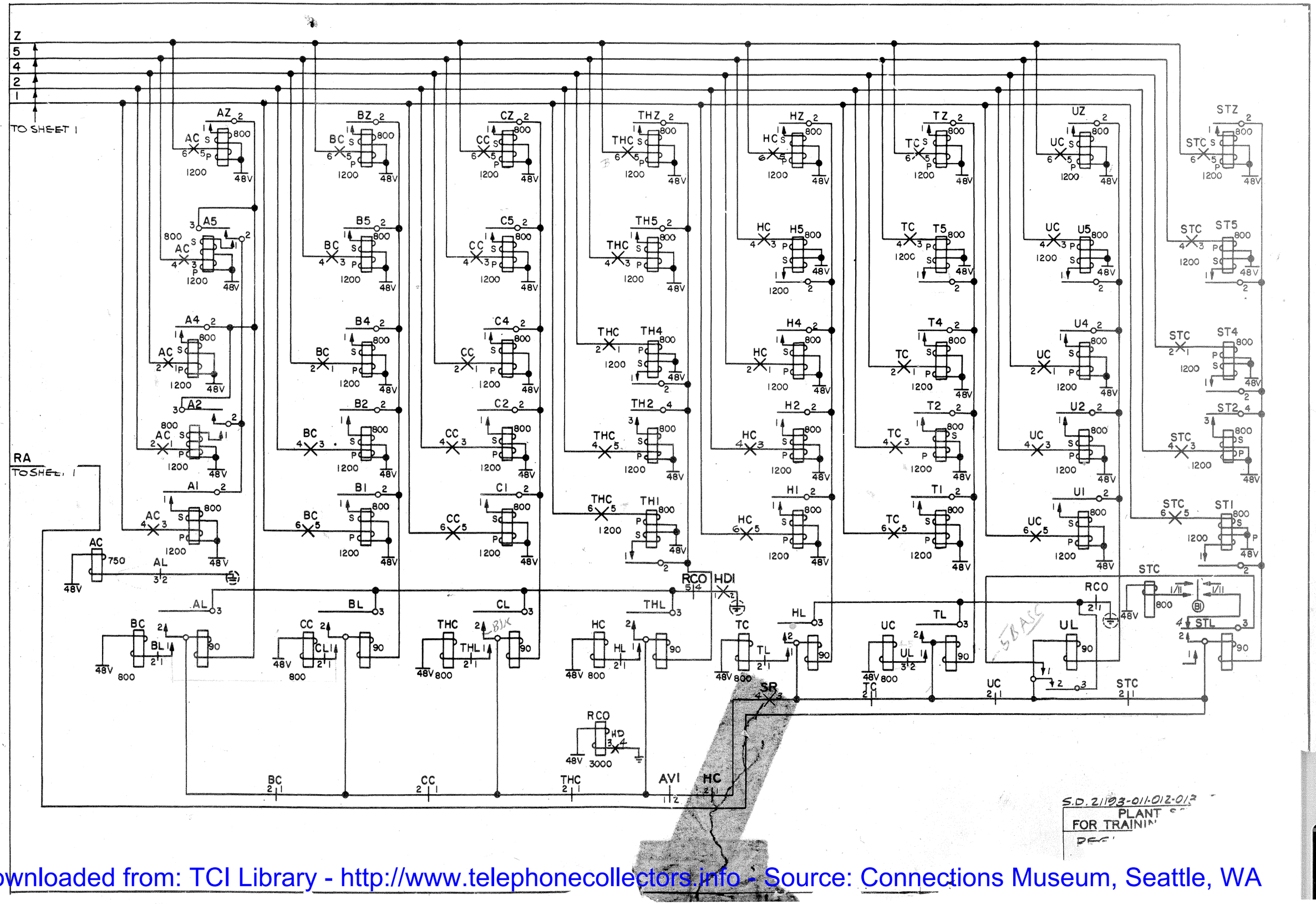

ISSUE 1
JAN. 1950

S.D. 21193-011-012-013
PLANT
FOR TRAINING

22

SEQUENCE CHART

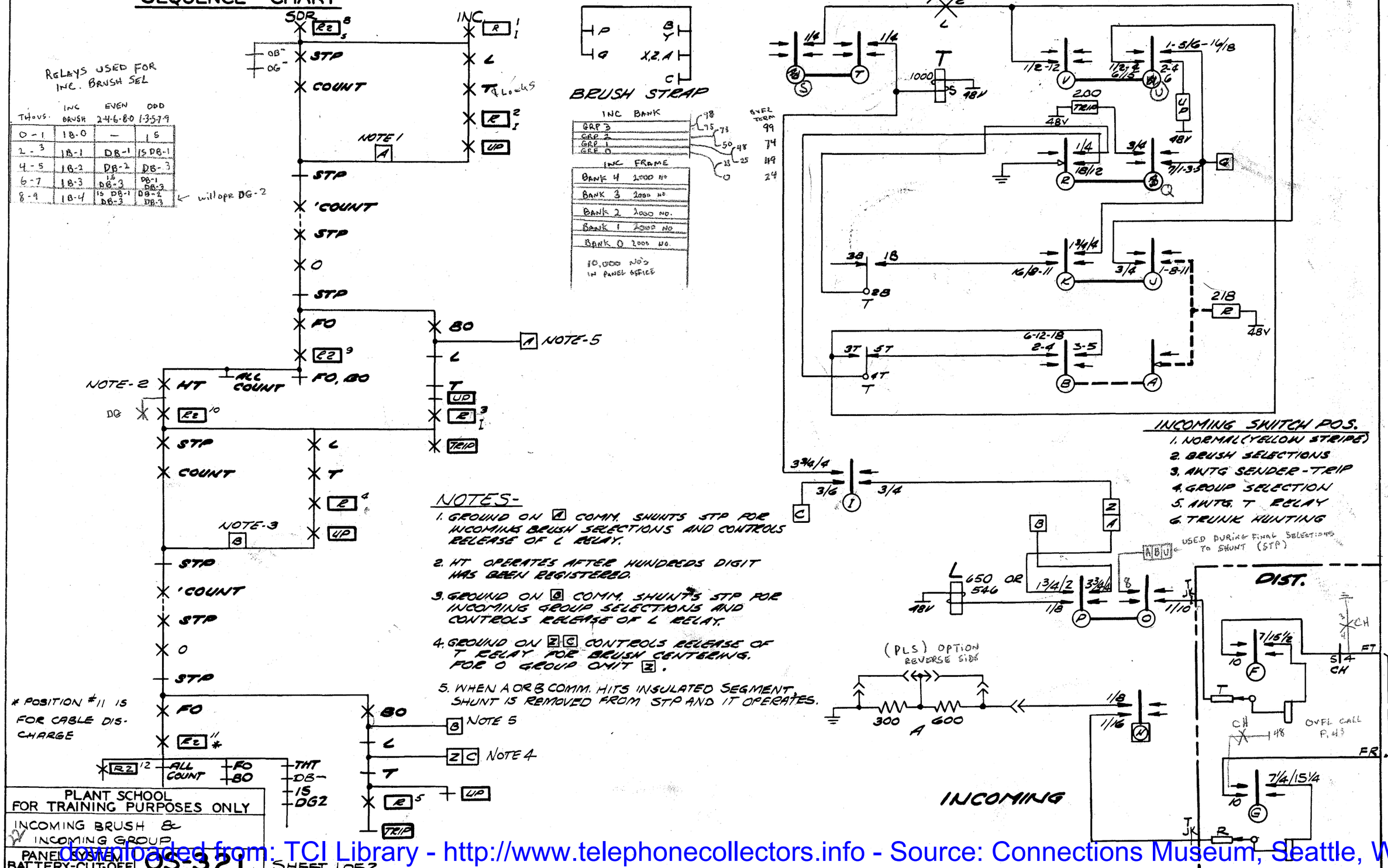

RELAYS USED FOR INC. BRUSH SEL

THOUS.	INC BRUSH	EVEN 2-4-6-8-0	ODD 1-3-5-7-9
0 - 1	1B-0	—	1S
2 - 3	1B-1	DB-1	1S DB-1
4 - 5	1B-2	DB-2	DB-3
6 - 7	1B-3	1S DB-3	DB-1 DB-3
8 - 9	1B-4	1S DB-1 DB-3	DB-2 DB-3

← will opr DG-2

NOTES-

1. GROUND ON [A] COMM. SHUNTS STP FOR INCOMING BRUSH SELECTIONS AND CONTROLS RELEASE OF L RELAY.
2. HT OPERATES AFTER HUNDREDS DIGIT HAS BEEN REGISTERED.
3. GROUND ON [B] COMM. SHUNTS STP FOR INCOMING GROUP SELECTIONS AND CONTROLS RELEASE OF L RELAY.
4. GROUND ON [Z][C] CONTROLS RELEASE OF T RELAY FOR BRUSH CENTERING. FOR O GROUP OMIT [Z].
5. WHEN A OR B COMM. HITS INSULATED SEGMENT SHUNT IS REMOVED FROM STP AND IT OPERATES.

INCOMING SWITCH POS.

1. NORMAL (YELLOW STRIPE)
2. BRUSH SELECTIONS
3. AWTG SENDER-TRIP
4. GROUP SELECTION
5. AWTG. T RELAY
6. TRUNK HUNTING

* POSITION #11 IS FOR CABLE DISCHARGE

PLANT SCHOOL
FOR TRAINING PURPOSES ONLY

INCOMING BRUSH & INCOMING GROUP

PANEL SYSTEM BATTERY-CUT-OFF

OS-321

SHEET 1 OF 2

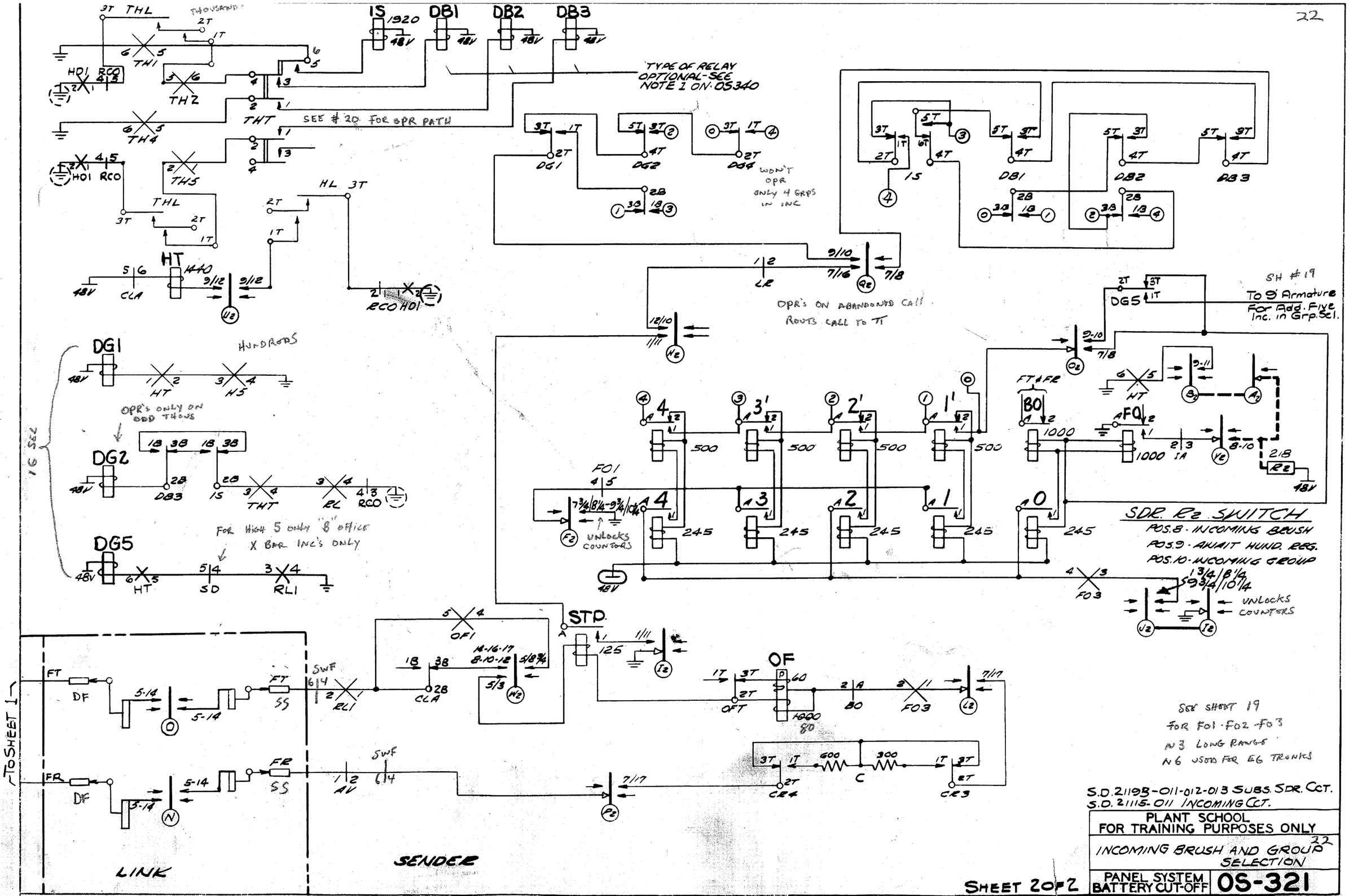

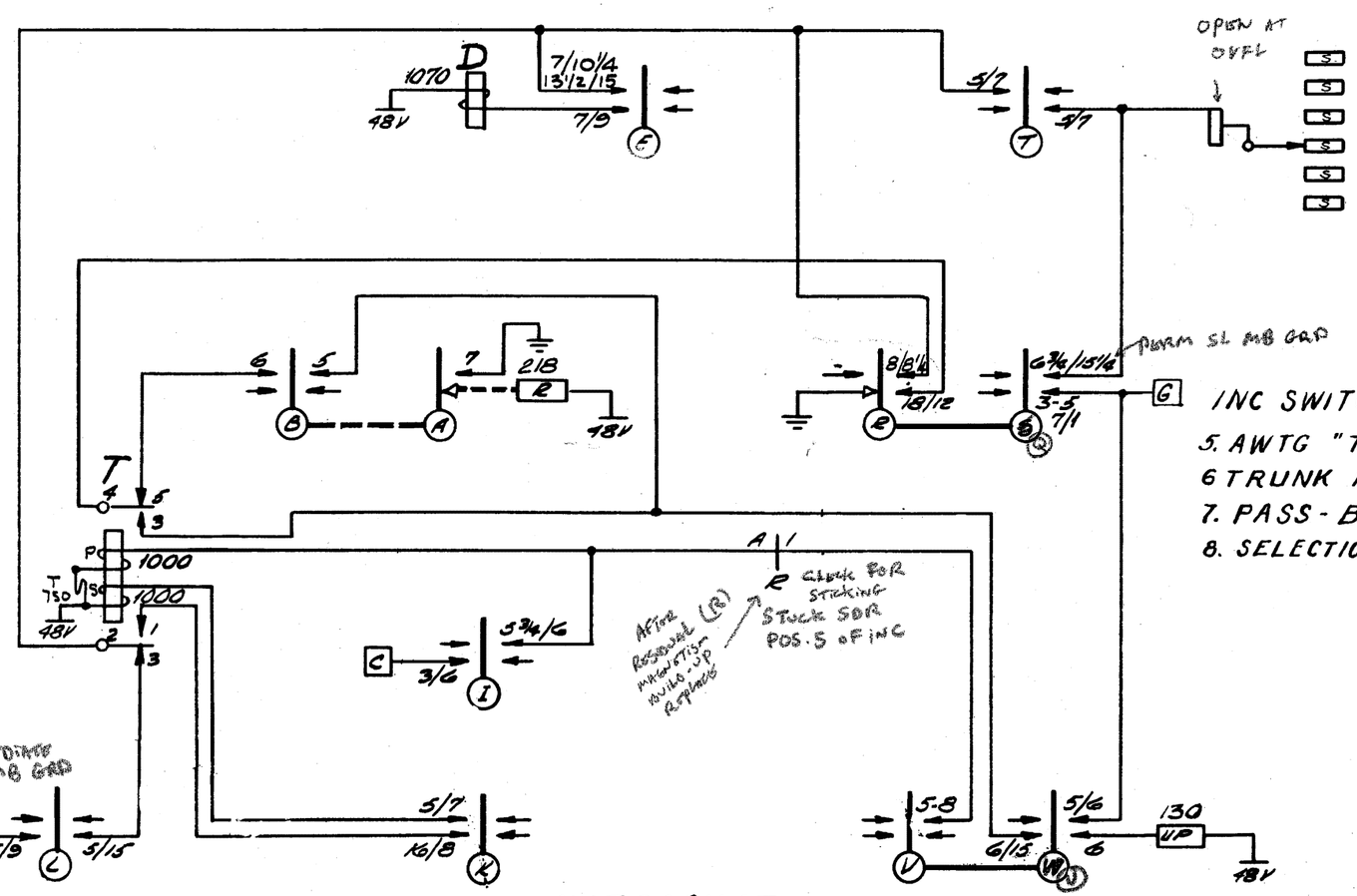

INC SWITCH POS.

5. AWTG "T" RELAY
6 TRUNK HUNTING
7. PASS-BY
8. SELECTIONS BEYOND

SEQUENCE CHART

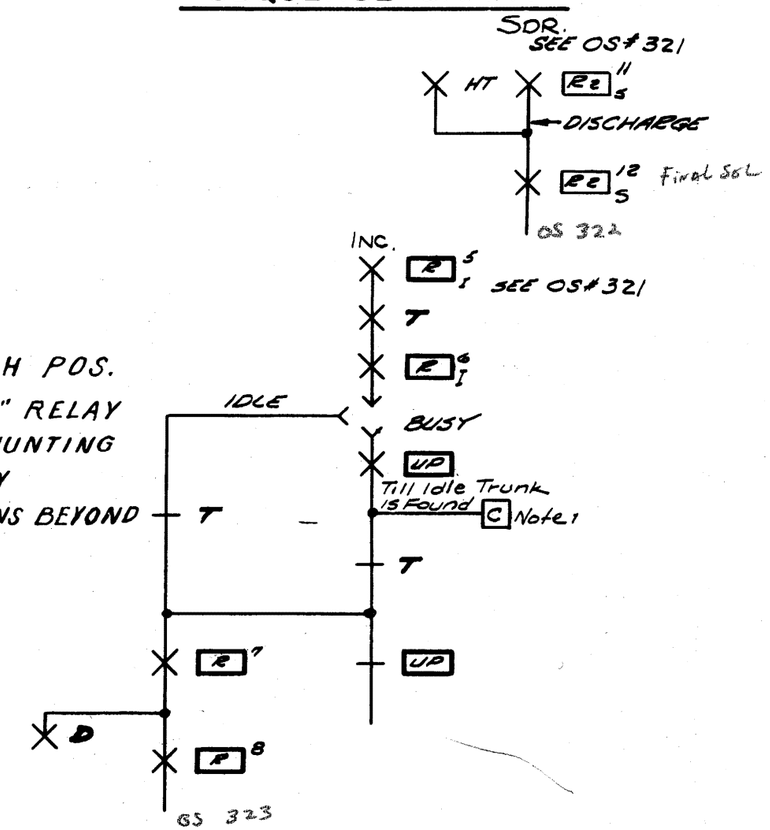

Note 1: When C Comm. Brush makes on insulation T relay releases.

INCOMING SENDER

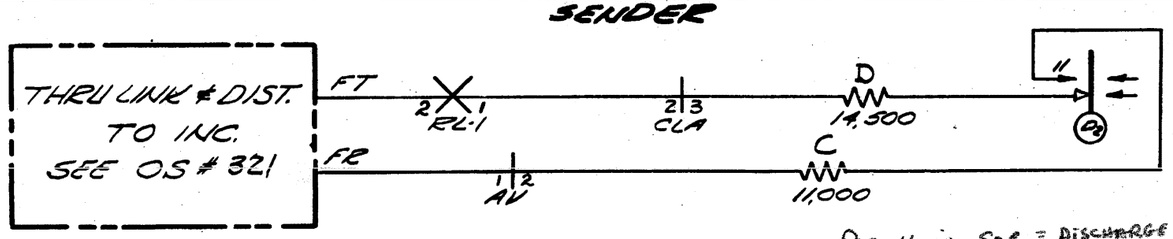

POS 11 IN SDR = DISCHARGE CABLE SO (STP) WON'T OPR FALSELY

CHECK (D2) INT IF INC. STAYS IN POS 8 BECAUSE FINAL SELECTIONS ARE DELAYED – SENDS CALL TO OVFL.
SEE HANDOUT ON P. 45

S.D. 21115-01 INC. SEL. CCT.
S.D. 21193-011-012-013 SUBS. SDR. CCT.

PLANT SCHOOL
FOR TRAINING PURPOSES ONLY

INCOMING TRUNK HUNTING 23
CABLE DISCHARGE

PANEL SYSTEM BATTERY CUT-OFF | OS-322

ISSUE 3-18-58

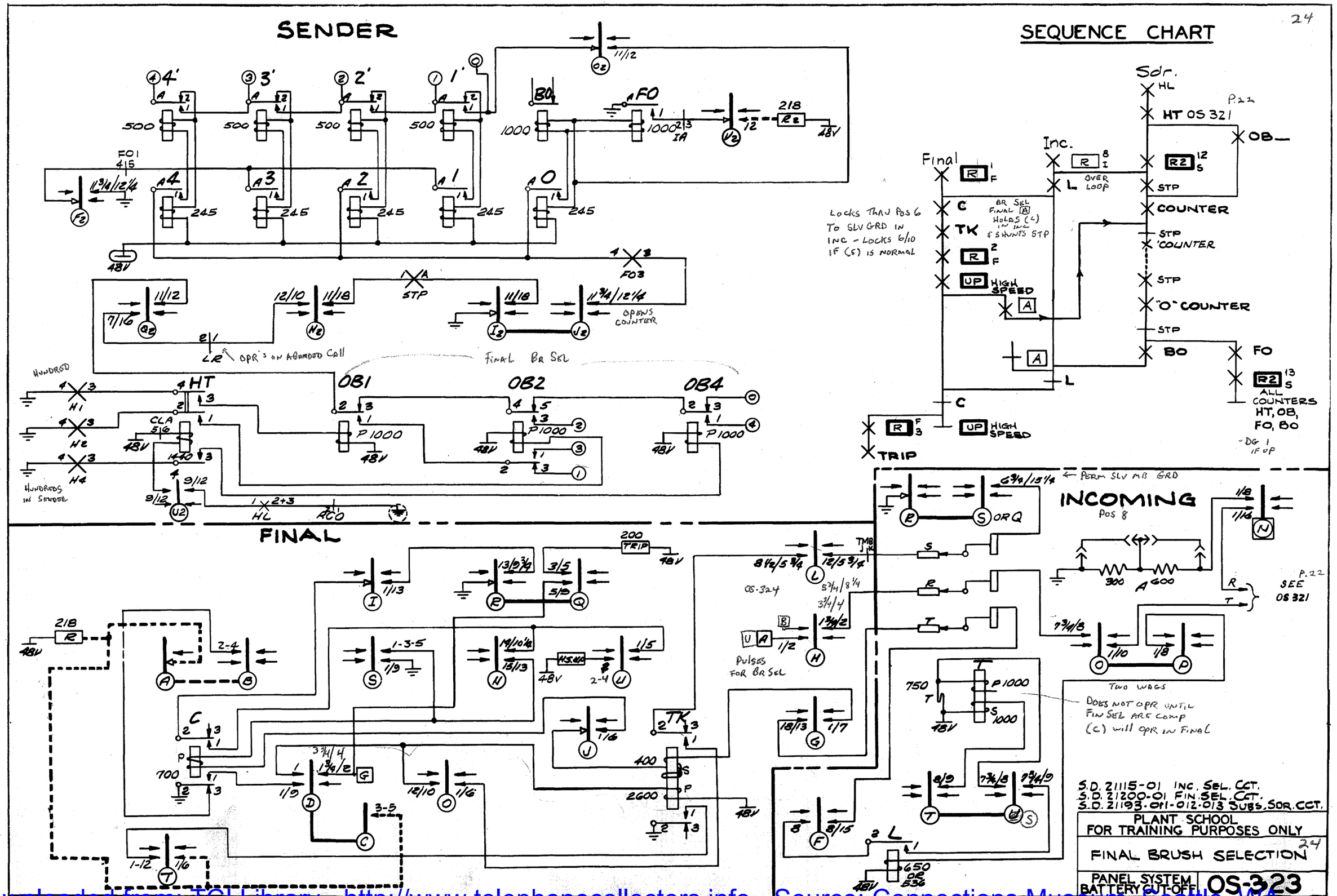

ISSUE 1 6-22-49

WAS DISCHARGED

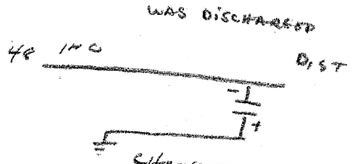

CHANGES CAPACITORS TO PREVENT FALSE OPERATION OF (A) WHEN APPLIED SAME POLARITY AS (A)

PUTS POTENTIAL TO CABLE TO CHARGE CABLE CAPACITY SO WHEN IS APPLIED IT WILL NOT FALSE OPR IN PO2 12

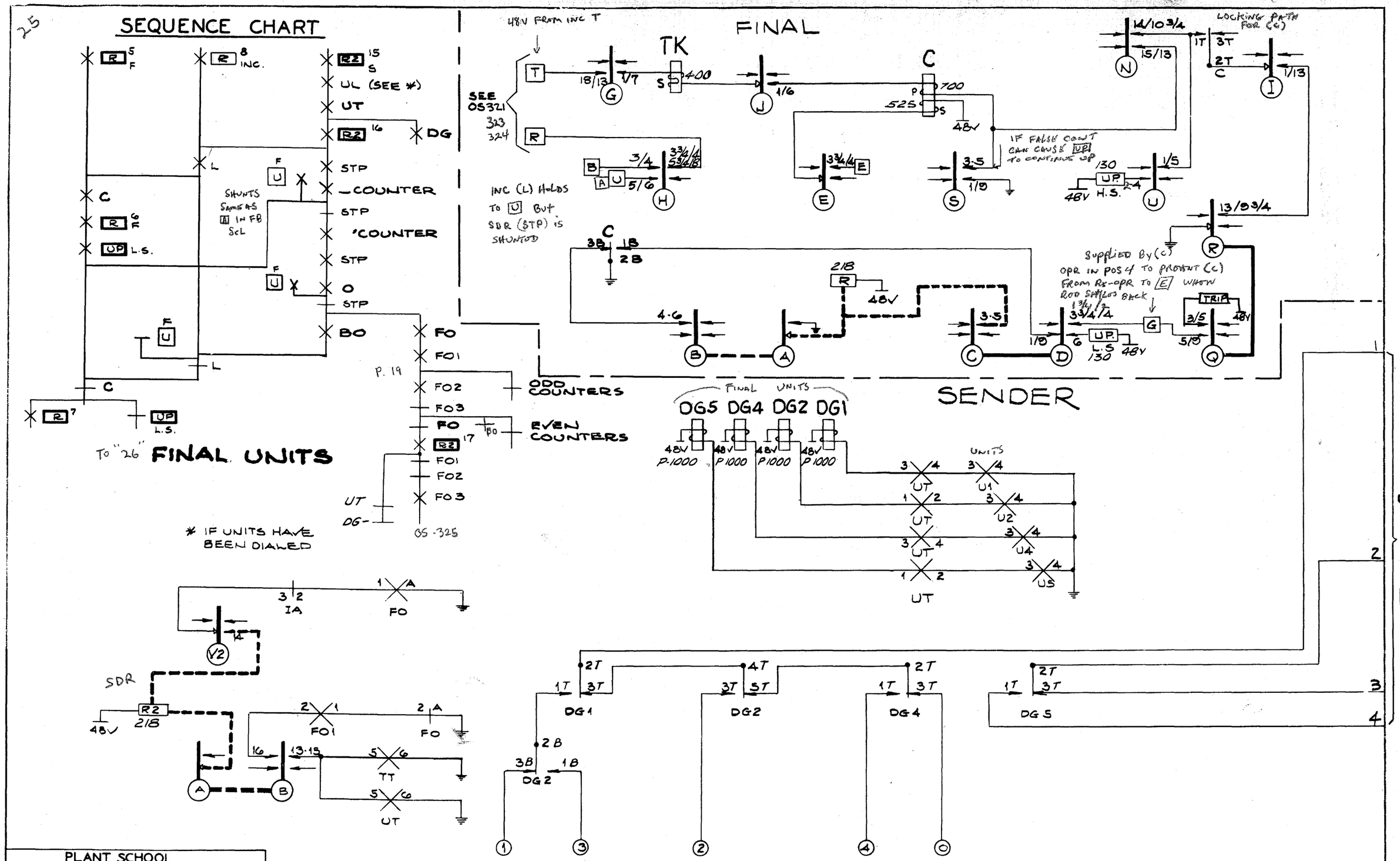

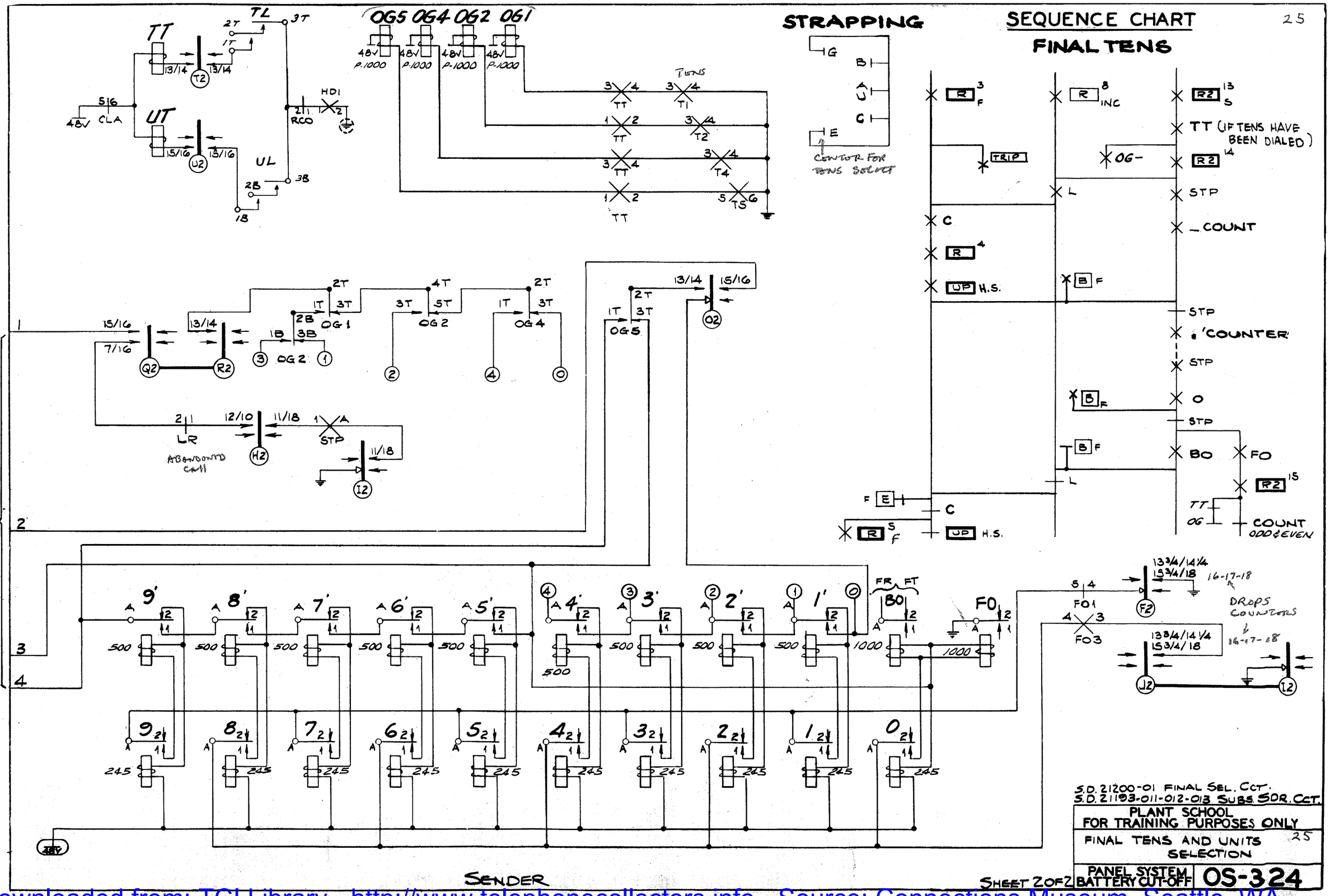

SENDER

INCOMING

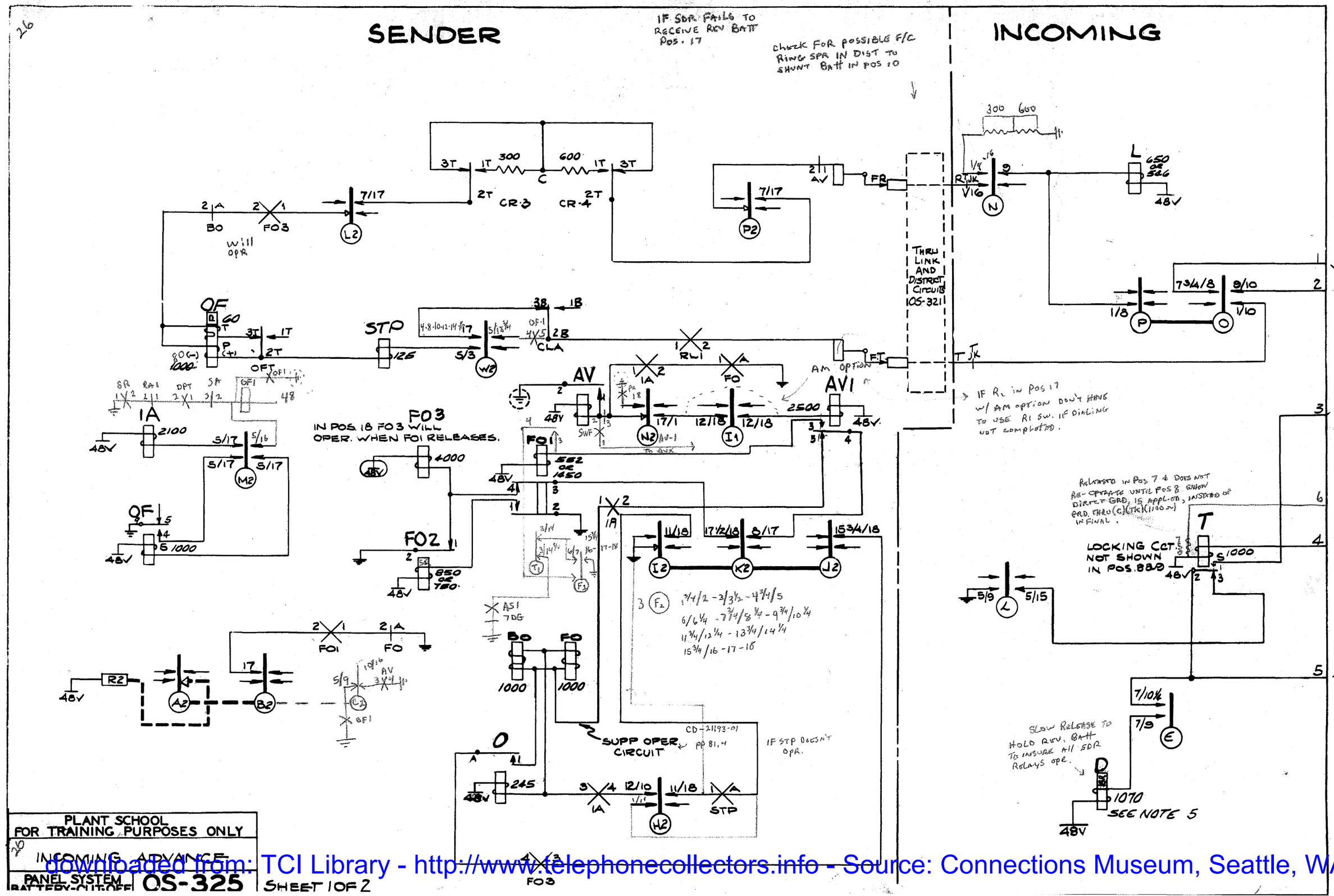

PLANT SCHOOL FOR TRAINING PURPOSES ONLY	
20 INCOMING ADVANCE	
PANEL SYSTEM BATTERY-CUT-OFF	OS-325 SHEET 1 OF 2

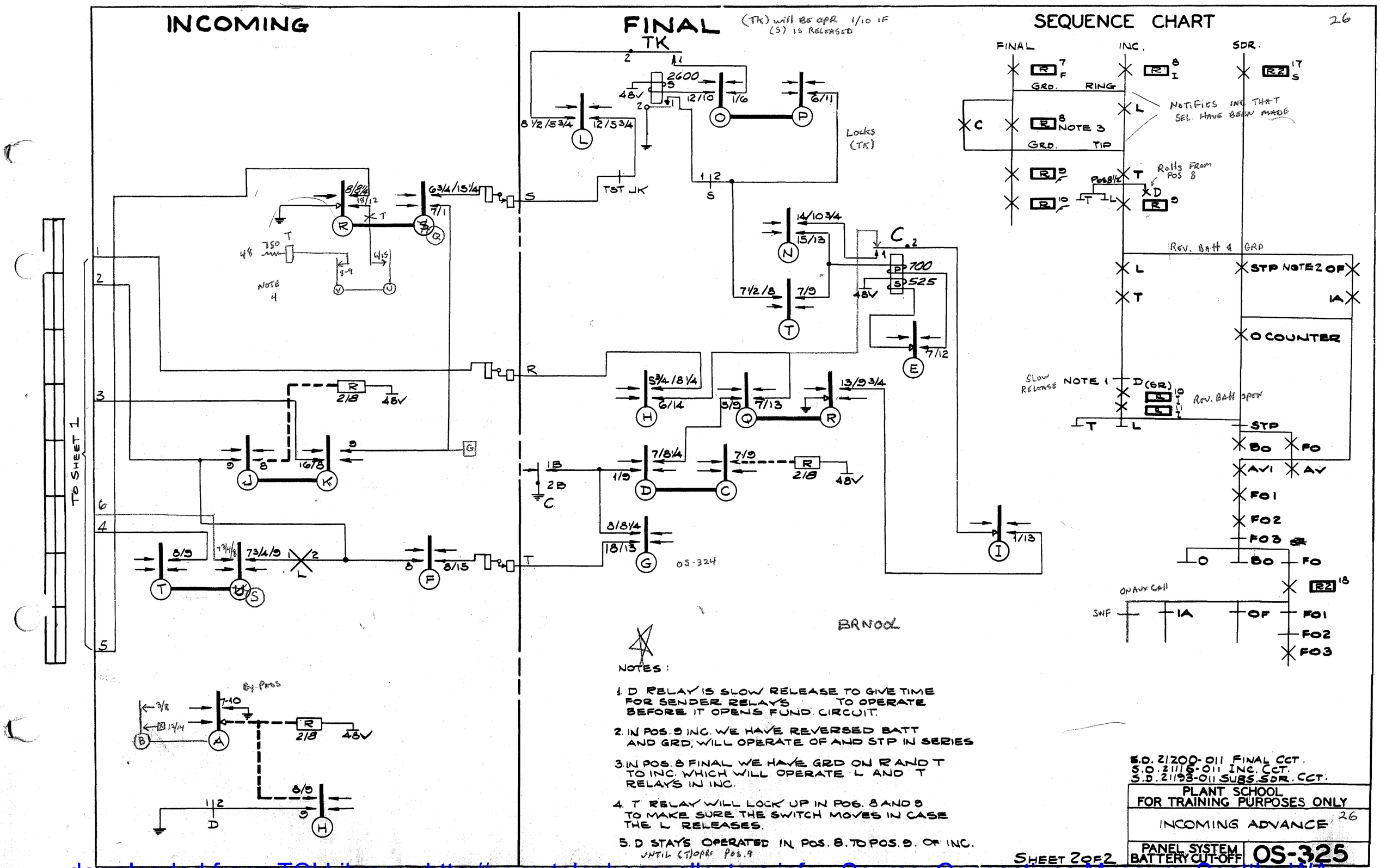

NOTES:

1. D RELAY IS SLOW RELEASE TO GIVE TIME FOR SENDER RELAYS TO OPERATE BEFORE IT OPENS FUND. CIRCUIT.
2. IN POS. 9 INC. WE HAVE REVERSED BATT AND GRD, WILL OPERATE OF AND STP IN SERIES
3. IN POS. 8 FINAL WE HAVE GRD ON R AND T TO INC. WHICH WILL OPERATE L AND T RELAYS IN INC.
4. T RELAY WILL LOCK UP IN POS. 8 AND 9 TO MAKE SURE THE SWITCH MOVES IN CASE THE L RELEASES.
5. D STAYS OPERATED IN POS. 8. TO POS. 9. OF INC. UNTIL (T) OPRS POS. 9

S.D. 21200-011 FINAL CCT.
S.D. 21115-011 INC. CCT.
S.D. 21193-011 SUBS. SDR. CCT.

PLANT SCHOOL
FOR TRAINING PURPOSES ONLY

INCOMING ADVANCE 26

SHEET 2 OF 2

PANEL SYSTEM BATTERY CUT-OFF

OS-325

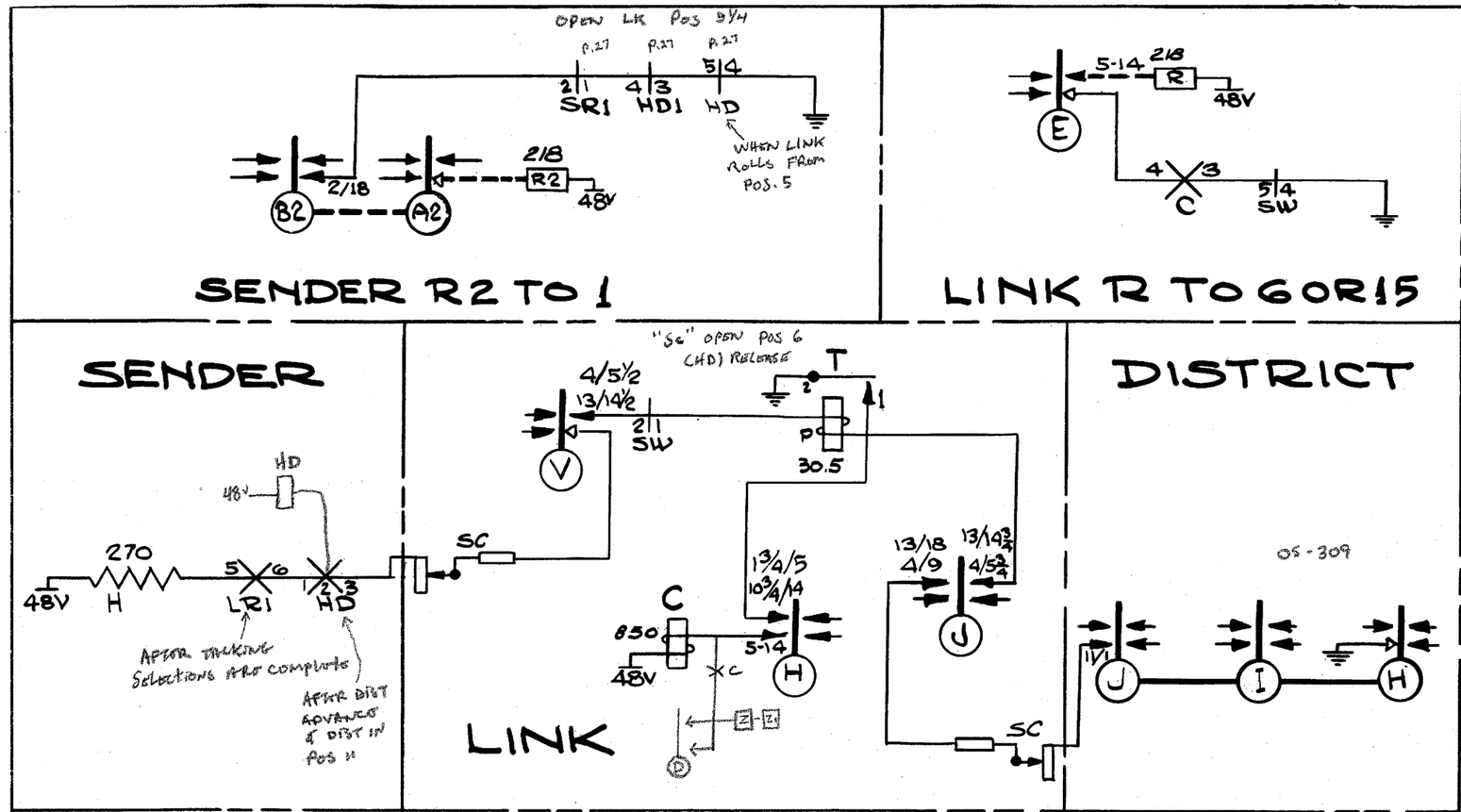

S.D. 20294-011 LINE, TRIP, START & LINK CC.
S.D. 21077-011 LINE, FIND & DIST. CCT.
S.D. 21193-011-012-013 SUB, SDR, CCT.

PLANT SCHOOL
FOR TRAINING PURPOSES ONLY

RELEASE OF SENDER 32

PANEL SYSTEM BATTERY CUT-OFF

OS-326

1. MEASURES TIME TO DIAL FIRST DIGIT. 30/60 SEC. POS. 2/3 POS. 4 PERM. SIGNAL.
2. MEASURES TIME TO DIAL UNITS DIGIT. 30/60 SEC. POS. 5/6 POS. 7 PARTIAL DIAL SIGNAL.
3. MEASURES TIME TO DIAL STATIONS DIGIT. 4 SEC. POS. 8/11.
4. MEASURES TIME TO COMPLETE CALL. POS. 12/14 PASS BY POS. 15/17 AWTG. RELEASE. POS. 18 STUCK SENDER. FULL MECH. CALL 30/60 SEC. P.C.I. & T.W. OFFICE CALLS 60/90 SEC.

NOTES:

1. TMS RELAY OPERATES AND LOCKS TO OFF NORMAL GROUND.
2. C1 IS OPERATED ON PCI CALLS. TW ON CALLS THROUGH TWO WIRE OFFICE SEL. C1 OR TW OPERATE ON STATION DELAY A, B, & D.
3. CL-3 OPERATES ON P.S. OPERATOR, AND THREE DIGIT CODE LIKE 211, 411 ETC.

(SD)° (SD1)' IF NO STA REQ'D

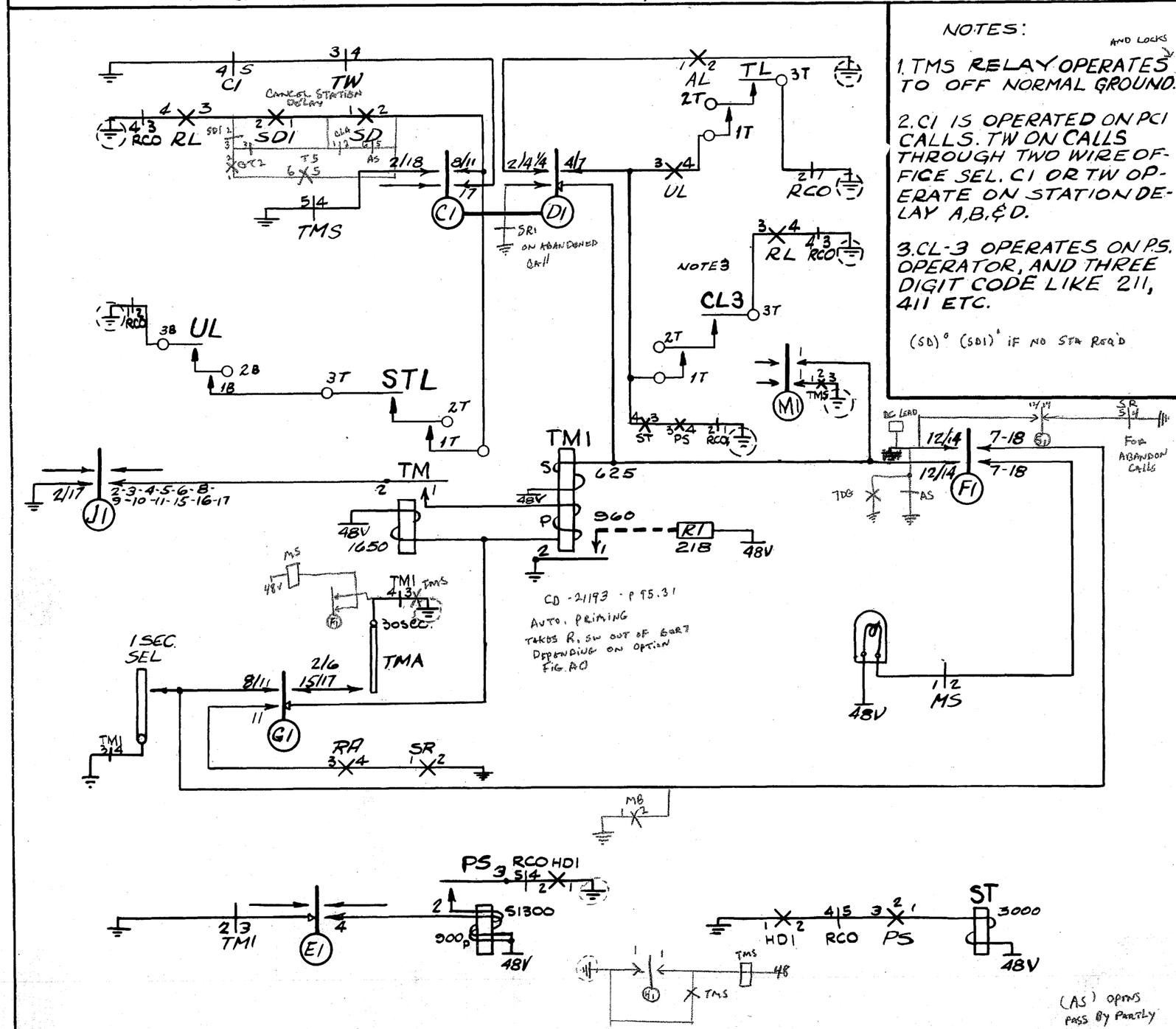

(AS) OPERS PASS BY PARTLY

SEQUENCE CHARTS

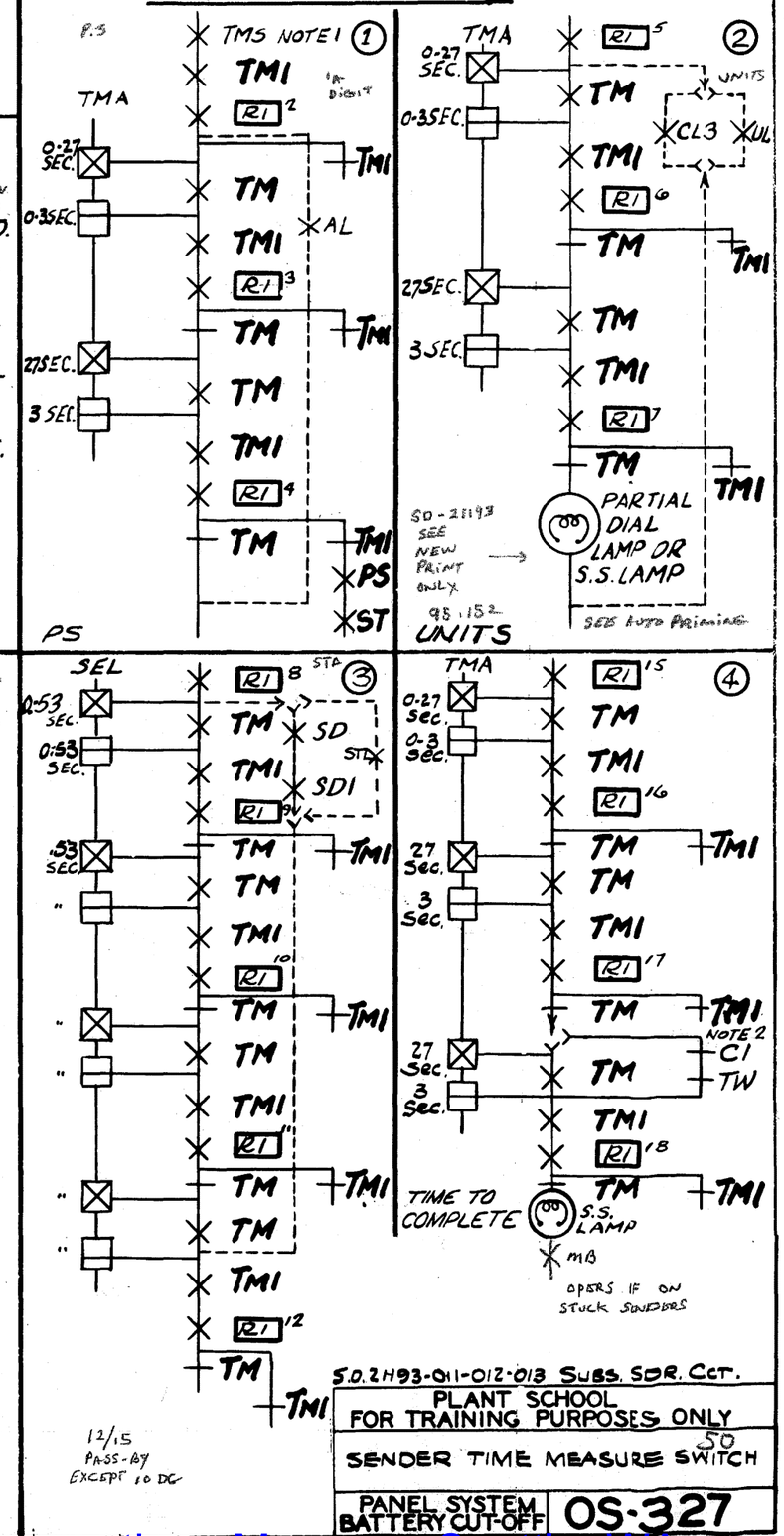

S.O. 2H93-011-012-013 SUBS. SDR. CCT.

PLANT SCHOOL FOR TRAINING PURPOSES ONLY

SENDER TIME MEASURE SWITCH

PANEL SYSTEM BATTERY CUT-OFF

OS-327

ISSUE 10-10-49

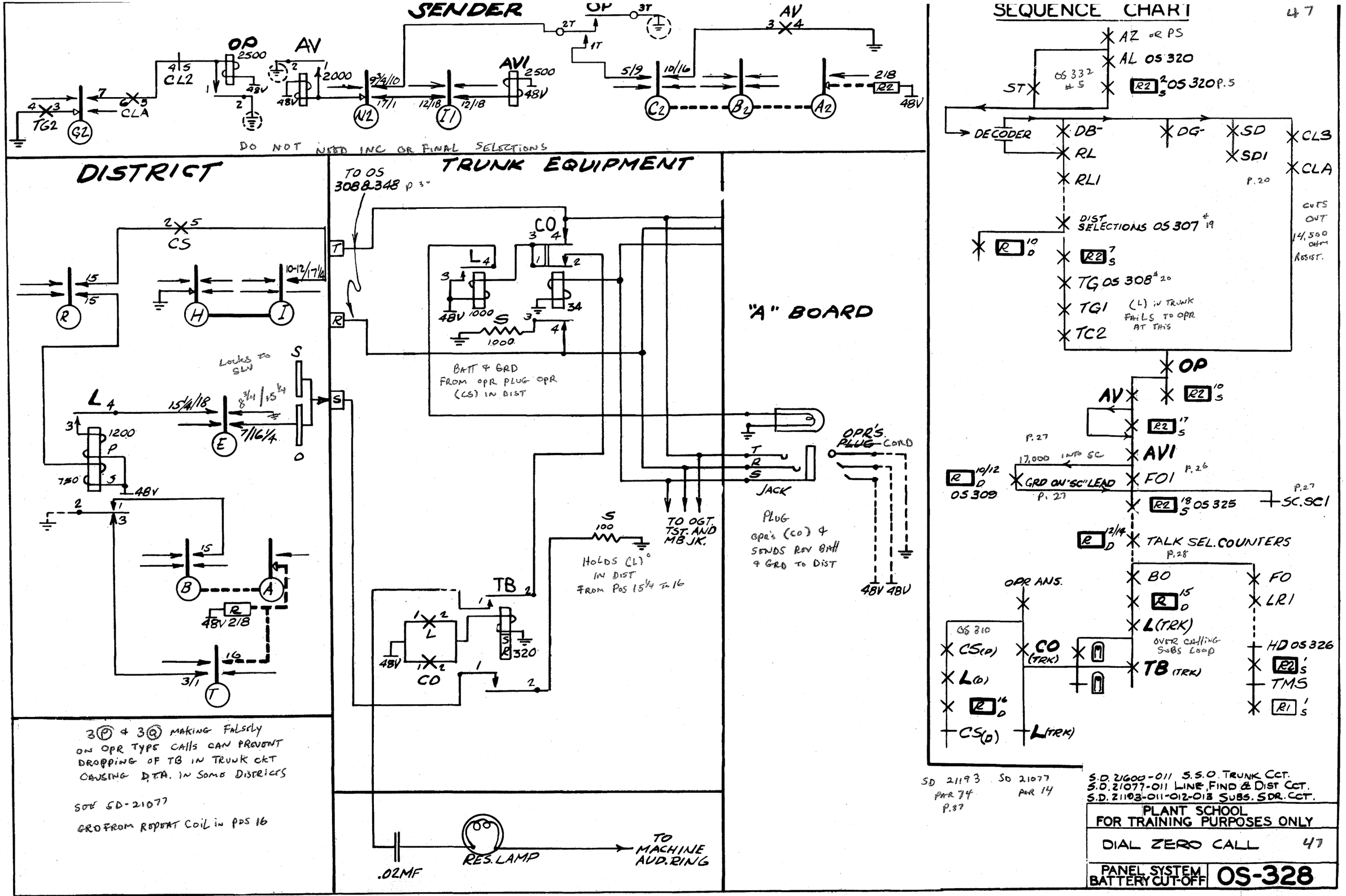

AUX SDR LINE

SAME AS HOLD MAG

ST - RELAYS

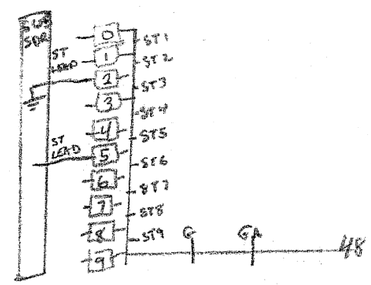

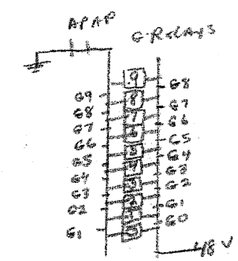

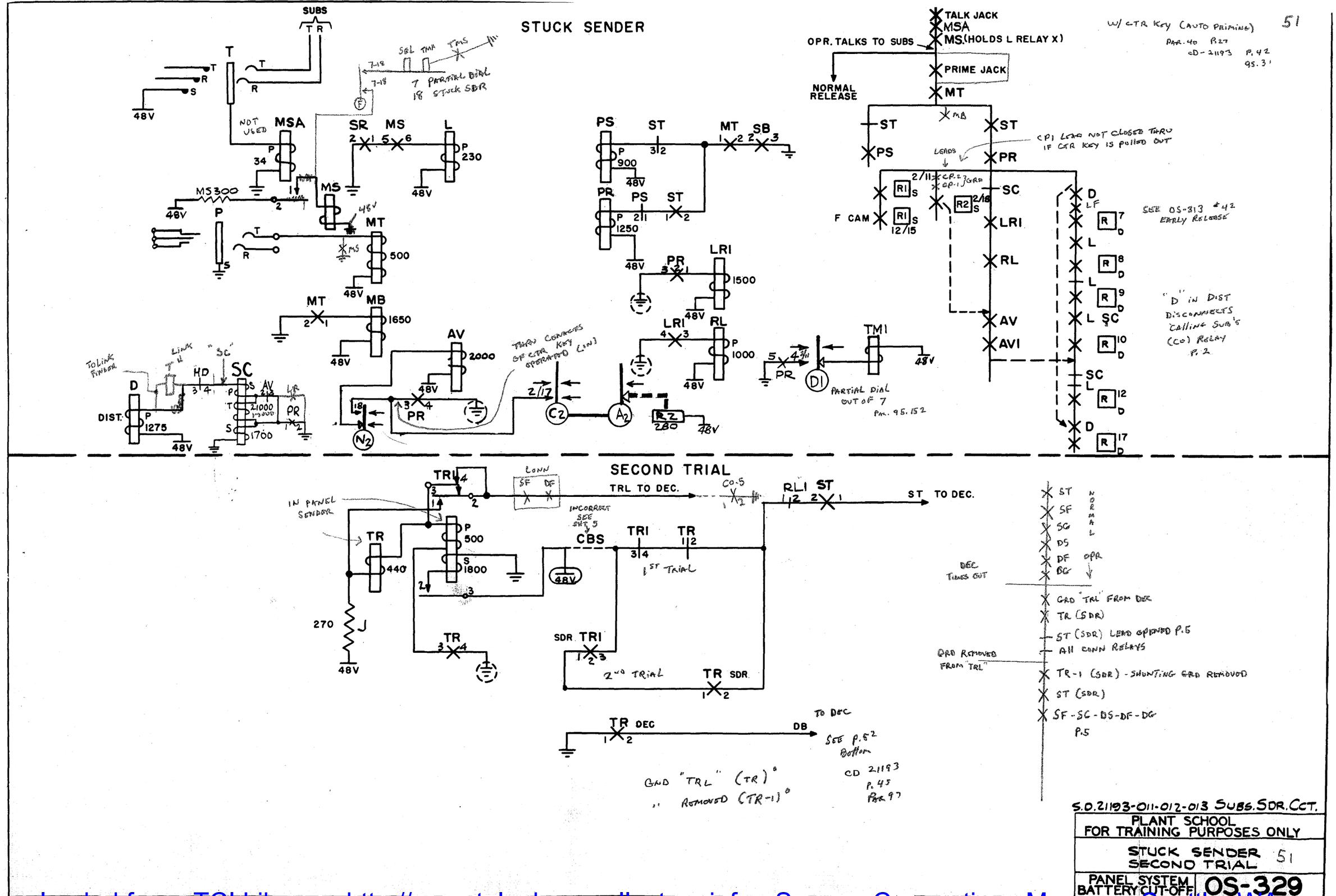

SEQUENCE CHART

DIAL ZERO

611
411

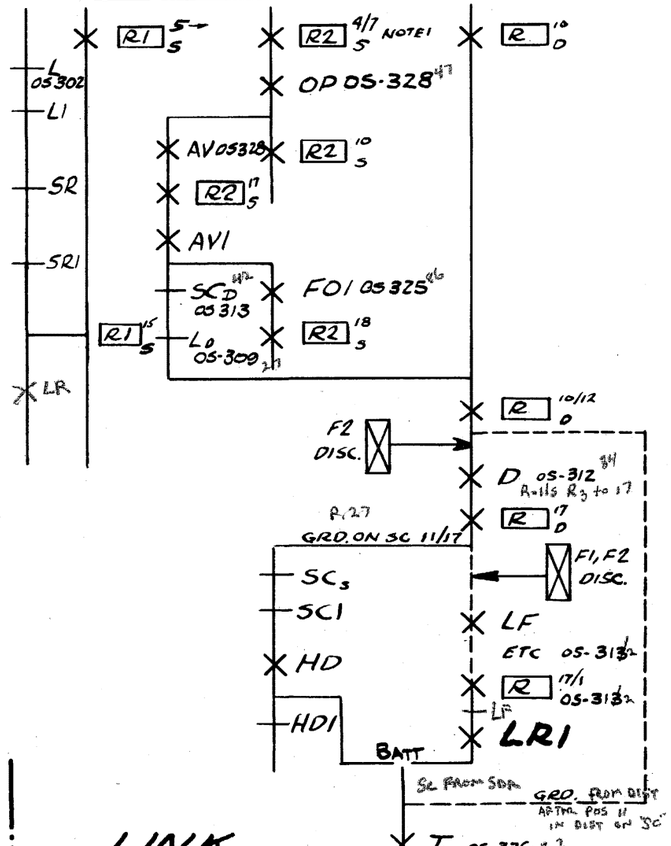

SD-21193
PAR. -89
P. 41

SENDER

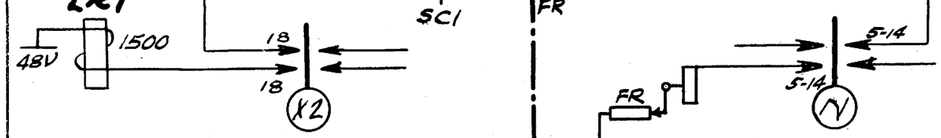

LINK

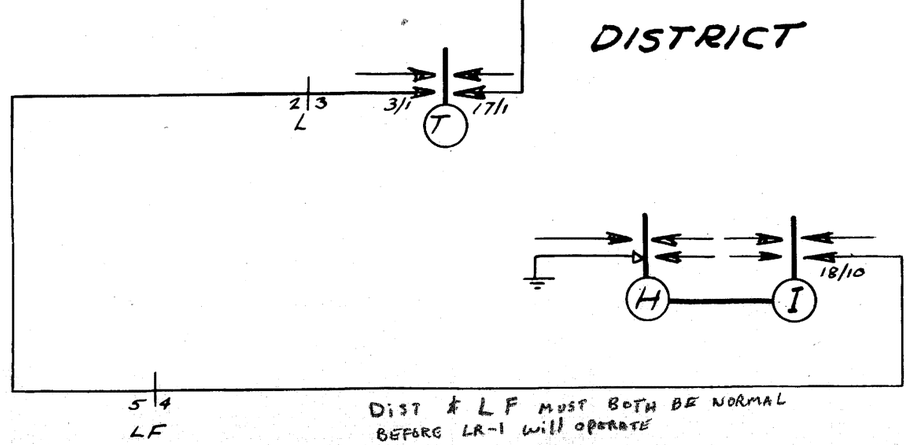

DIST & LF MUST BOTH BE NORMAL BEFORE LR-1 will OPERATE

SEQUENCE CHART

FULL MECHANICAL SENDER

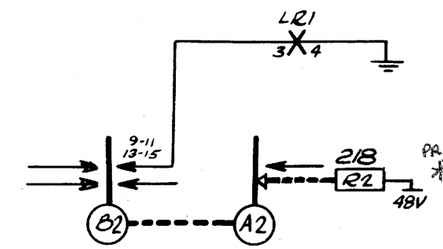

DISTRICT

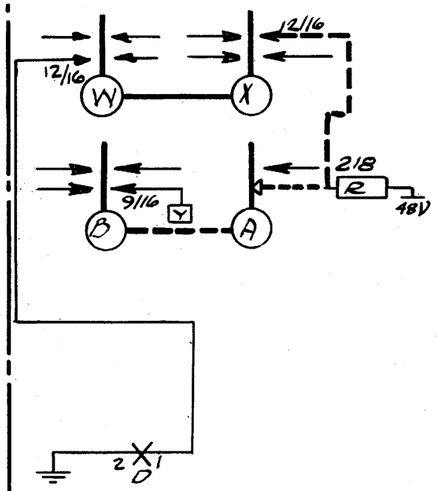

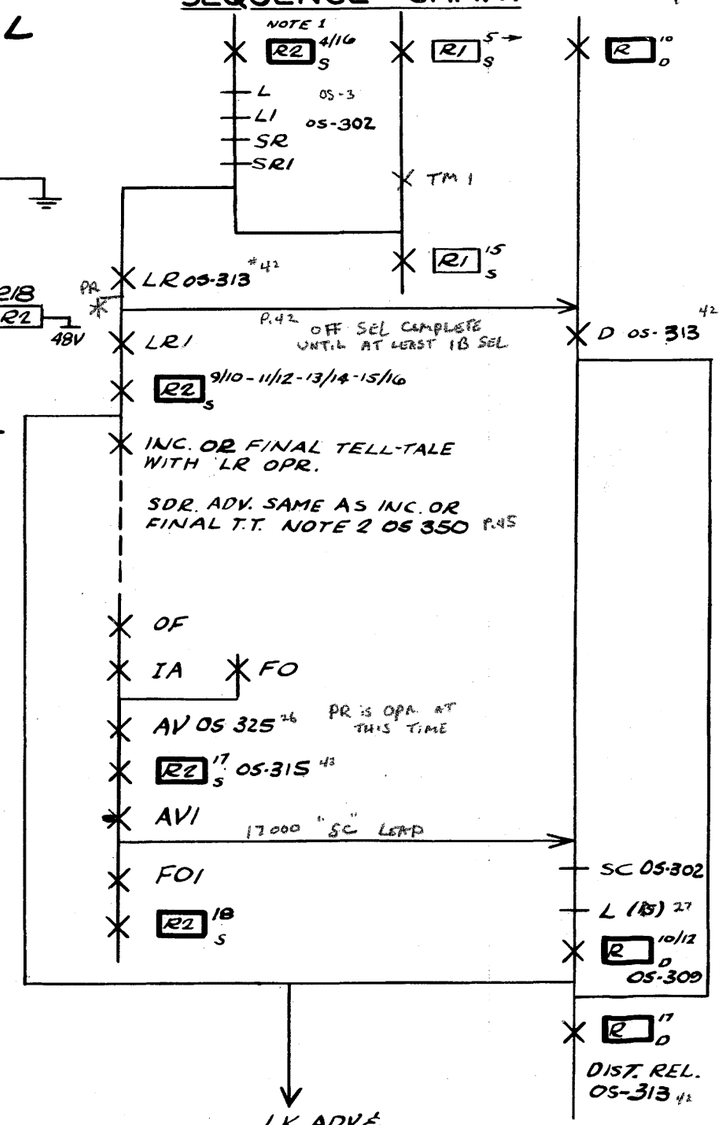

NOTES:

1. SDR. COMPLETES WHATEVER IS LEFT OF OFFICE TEST, OFF. GP. AND TRK. TEST.
2. INC. OR FINAL TO TELL-TALE BECAUSE LR OPENS COUNTING RLY. CIRCUIT.

ABANDONED CALL

S.D. 21077-011 LINE, FIND. & DIST. CCT.
S.D. 21193-011-012-013 SUBS. SDR. CCT.

PLANT SCHOOL
FOR TRAINING PURPOSES ONLY

LATE RELEASE 49
FULL MECH. & OPR. CALLS

PANEL SYSTEM BATTERY CUT-OFF **OS-330**

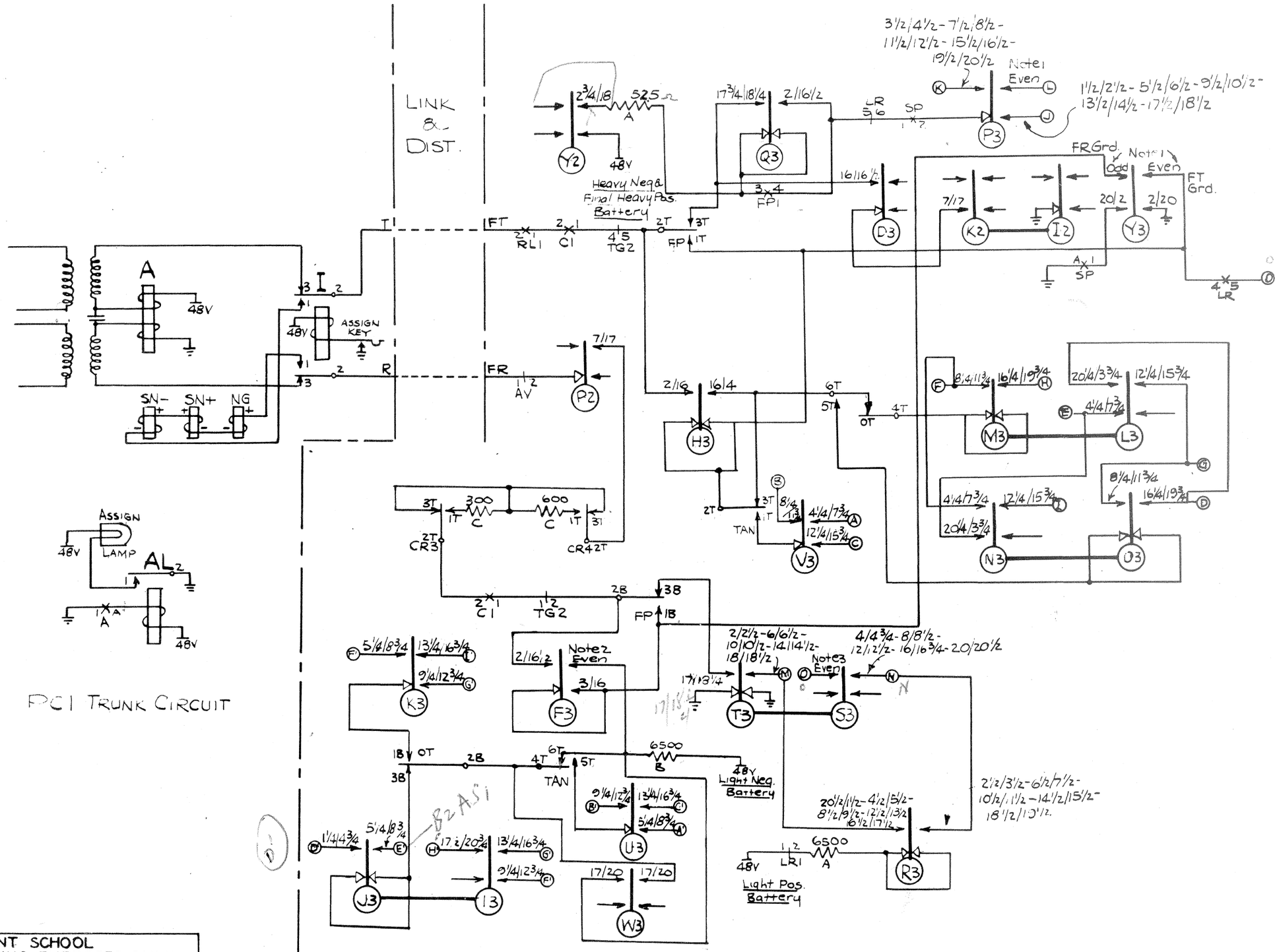

PLANT SCHOOL FOR TRAINING PURPOSES ONLY	
PC1 IMPULSES	
PANEL SYSTEM BATTERY CUT OFF	OS-331 SHEET 1 OF 4

REG. RELAY CIRCUIT

NOTES

1. #2 & #3 Springs make 1/4 before & after Pos. indicated.
2. #3 Spring makes 1/2 before & after Pos. indicated.
3. #2 Spring makes 1/2 after Pos. indicated.
4. FP & FP1 releases when R3 leaves Pos. 10 on 2nd rev.
5. SP operates from C1 relay.
6. LR & LR1 operates abandoned calls.
7. + & ┼ sent over tip, – & ━ sent over ring.
8. (J) Furnishes – 2nd period (L) Furnishes ━ 2nd & 4th period.
   (K) Furnishes – 4th period (M) Furnishes + 1st period (N) Furnishes + 3rd period.
9. + Pulses are never sent in both 1st & 3rd periods.
10. – Pulses are sent in both 2nd & 4th period regardless of reg. relays.
    ━ is superimposed in 2nd & 4th period by Reg. relays.

PULSE CHART

Pulse Code Chart for 3 digit senders						
Sta.	Thou	Others	Pulses 1st	2nd	3rd	4th
0	0	0		–		–
1	2	1	+	–		–
W	4	2		━		–
R	6	3	+	━		–
J	8	4		–	+	–
M	1	5		–		━
	3	6	+	–		━
	5	7		━		━
	7	8	+	━		━
	9	9		–	+	━
1st CYCLE: STA			16 3/4/19 1/4	17 1/2/18 1/2	18 3/4/19 1/4	19 1/2/20 1/2
2nd " TH			20 3/4/1 1/4	1 1/2/2 1/2	2 3/4/3 1/4	3 1/2/4 1/2
3rd " H			4 3/4/5 1/4	5 1/2/6 1/2	6 3/4/7 1/4	7 1/2/8 1/2
4th " T			8 3/4/9 1/4	9 1/2/10 1/2	10 3/4/11 1/4	11 1/2/12 1/2
5th " U			12 3/4/13 1/4	13 1/2/14 1/2	14 3/4/15 1/4	15 1/2/16 1/2
Final Heavy + pulse 17 3/4/18 1/4 (2nd Rev.)						

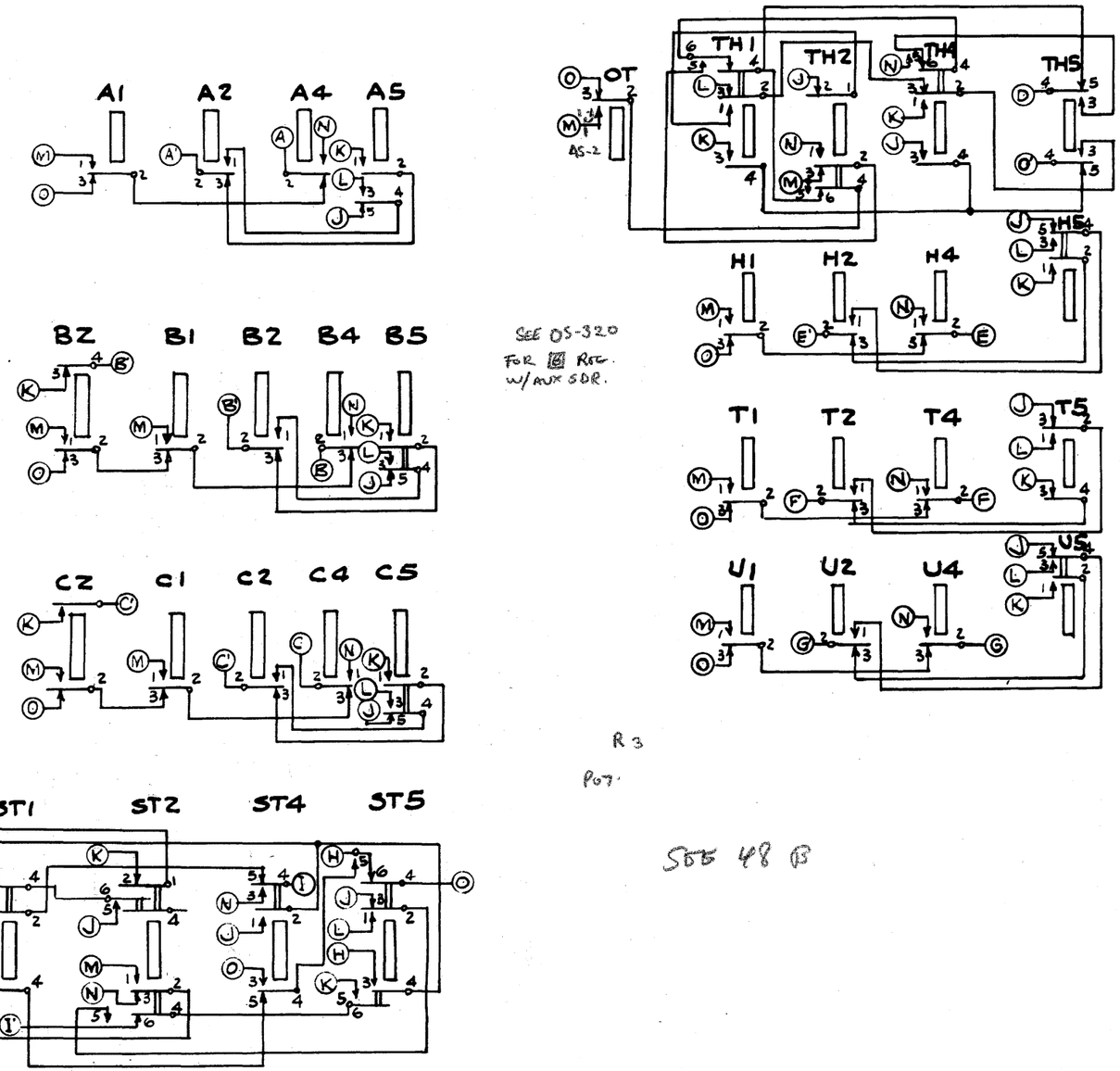

R3 Pos.

SEE 48 B

S.D. 21193-011-012-013 SENDER

PLANT SCHOOL
FOR TRAINING PURPOSES ONLY

PC1 IMPULSE 48

PANEL SYSTEM BATTERY CUT-OFF | OS-331

SHEET 2 OF 4

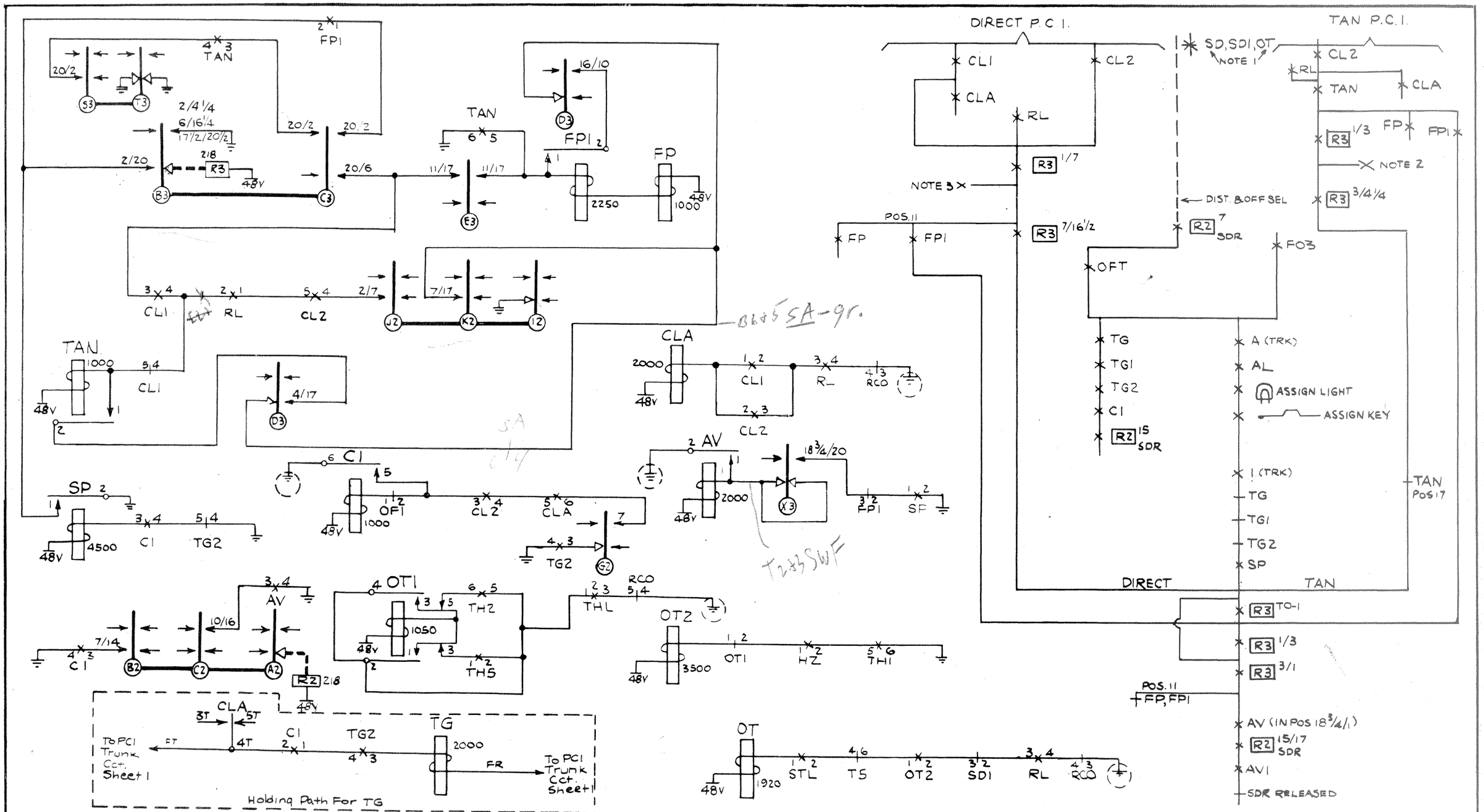

NOTES

1.

OT – POSSIBLE {STA DELAY}	A	ABOVE AND PARTYS – NONE
	B	ABOVE AND NO PARTYS – SD
OT – IMPOSSIBLE {STA DELAY}	C	BELOW AND NO PARTYS – SD, SD1
	D	BELOW AND PARTYS – SD1

2. 33 CAM ADVANCES SW FROM 3 TO 4 1/4 ON TAN

3. 33 CAM ADVANCES SW FROM 6 TO 16 1/4 ON DIRECT

PLANT SCHOOL
FOR TRAINING PURPOSES ONLY

P.C.I. IMPULSES

PANEL SYSTEM BATTERY CUT-OFF

OS-331

SHEET 3 OF 4

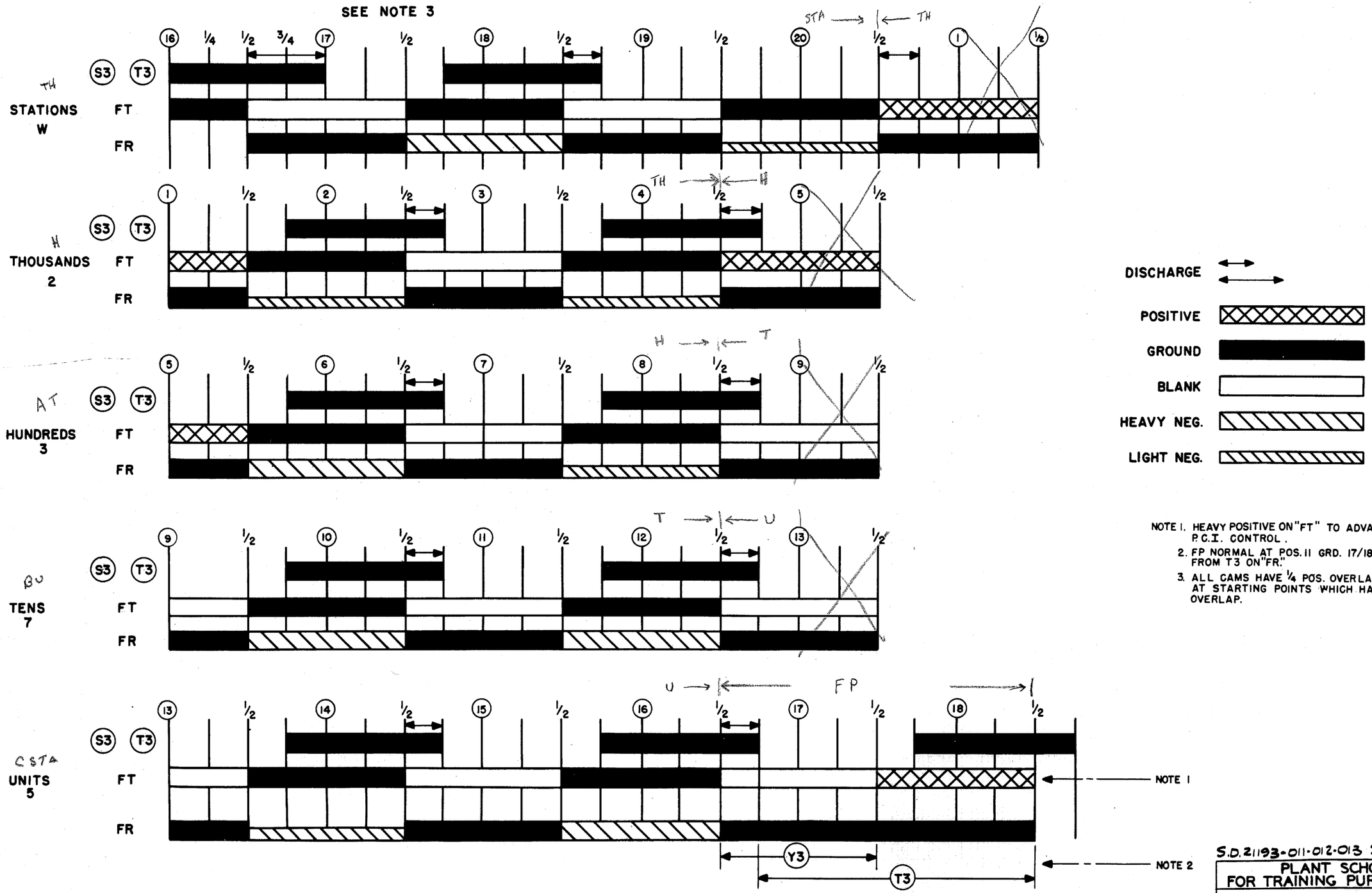

NOTE 1. HEAVY POSITIVE ON "FT" TO ADVANCE P.C.I. CONTROL.

2. FP NORMAL AT POS. 11 GRD. 17/18 1/4 FROM T3 ON "FR."

3. ALL CAMS HAVE 1/4 POS. OVERLAP, EXCEPT AT STARTING POINTS WHICH HAVE 1/2 POS. OVERLAP.

S.D. 21193-011-012-013 SUBS. SDR. CCT.

PLANT SCHOOL
FOR TRAINING PURPOSES ONLY

LINE PULSE CHART 48G

PANEL SYSTEM BATTERY CUT-OFF

OS-331

SHEET 4 OF 4

ISSUE 1 JAN. 1950

AUX SNDR LINK

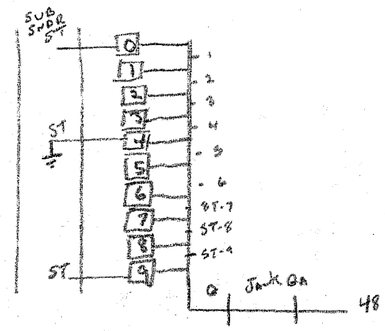

G Relays

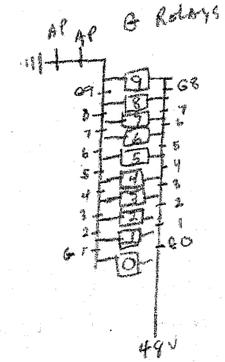

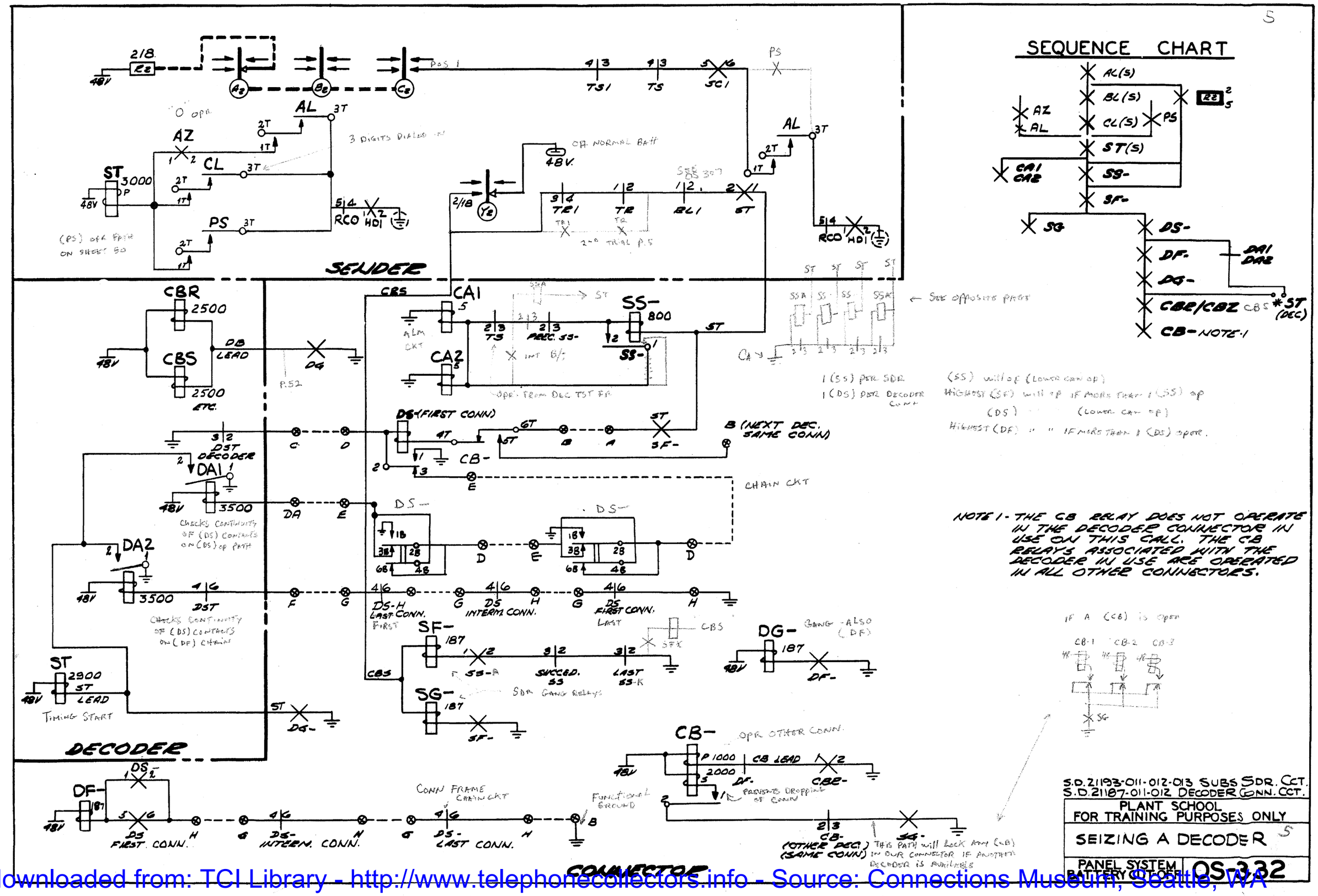

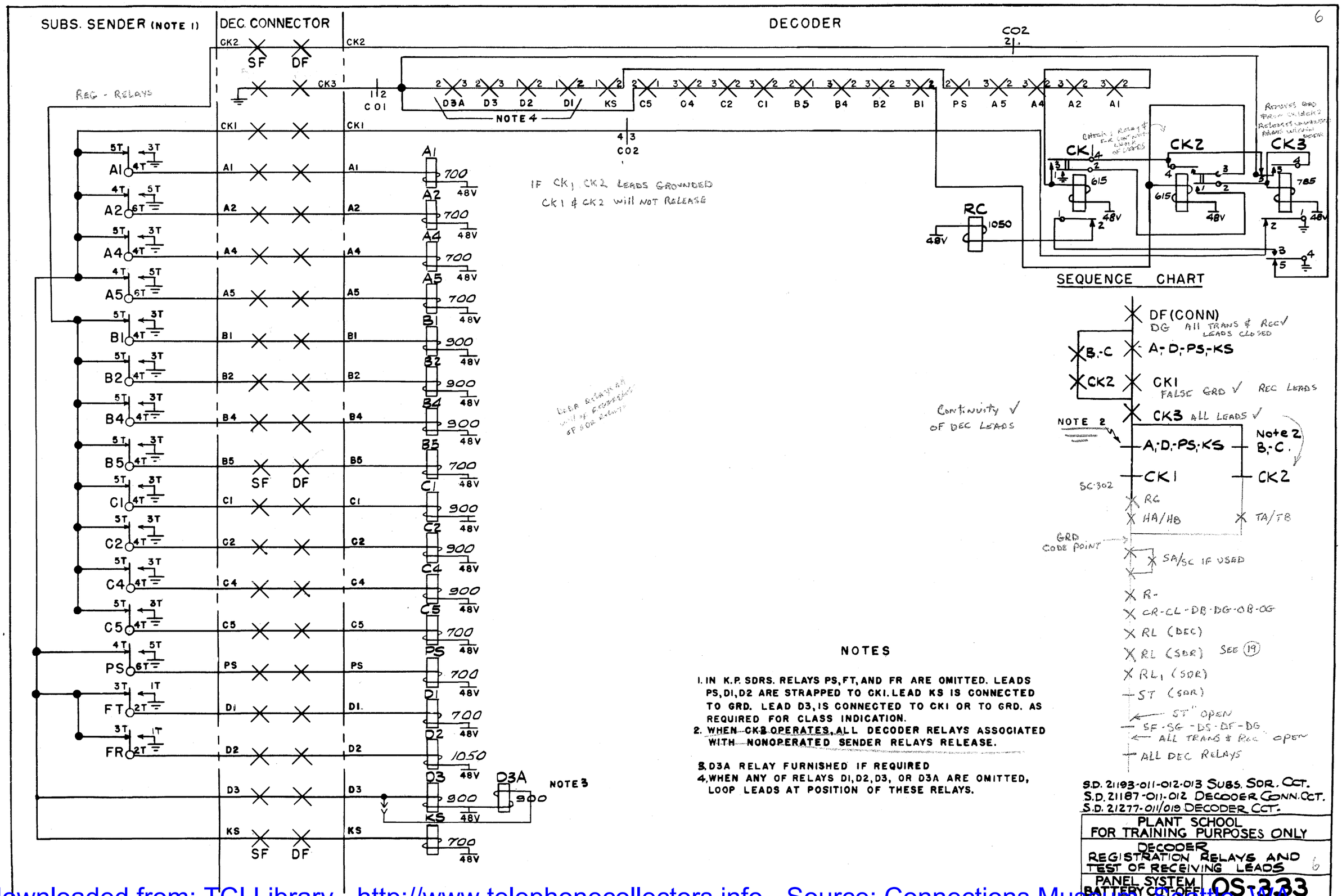

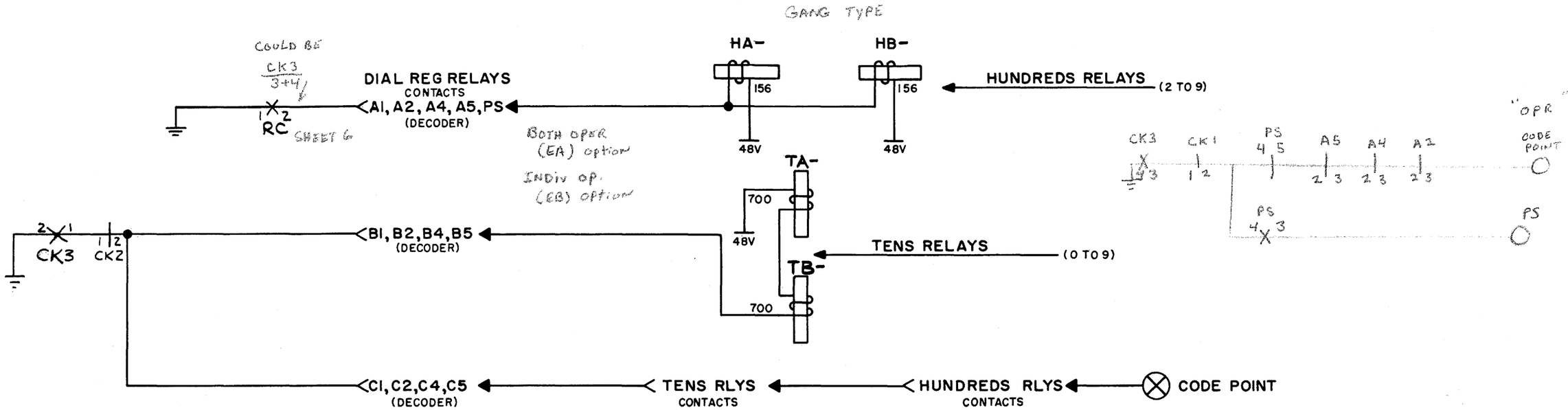

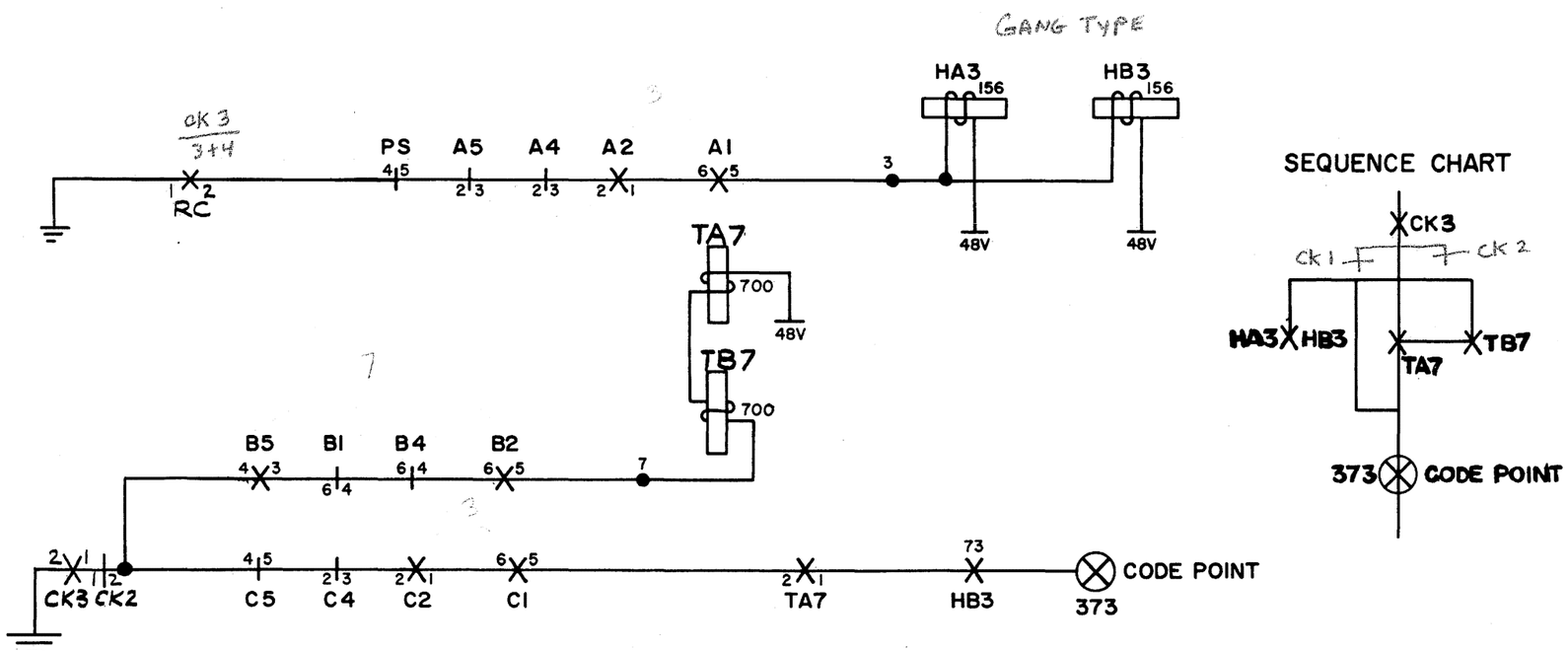

S.D. 21277-011/019 DECODER CCT.

PLANT SCHOOL
FOR TRAINING PURPOSES ONLY

DECODER
HA-HB, TA-TB RELAY OPERATION
FOR GROUNDING CODE PT.

PANEL SYSTEM
BATTERY CUT-OFF

OS-334

ISSUE 1
JAN. 1950

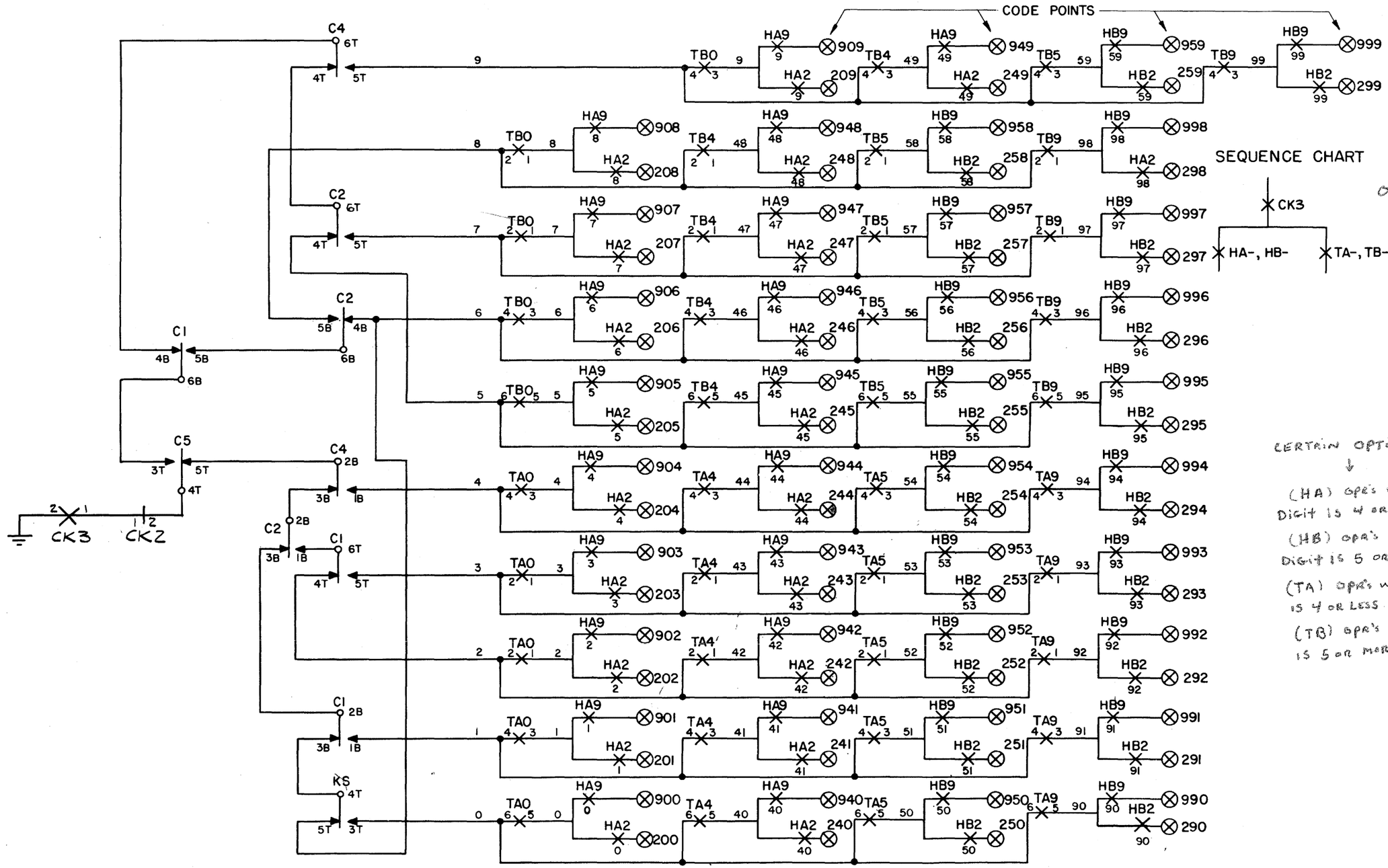

CERTAIN OPTIONS
↓
(HA) OPR'S WHEN 2ND DIGIT IS 4 OR LESS.
(HB) OPR'S WHEN 2ND DIGIT IS 5 OR MORE.
(TA) OPR'S WHEN "C" DIGIT IS 4 OR LESS
(TB) OPR'S WHEN "C" DIGIT IS 5 OR MORE.

ISSUE 1
JAN. 1950

S.O. 21277-011/109 DECODER CCT.

PLANT SCHOOL
FOR TRAINING PURPOSES ONLY

DECODER
GROUNDING A CODE POINT

PANEL SYSTEM BATTERY CUT-OFF

OS-335

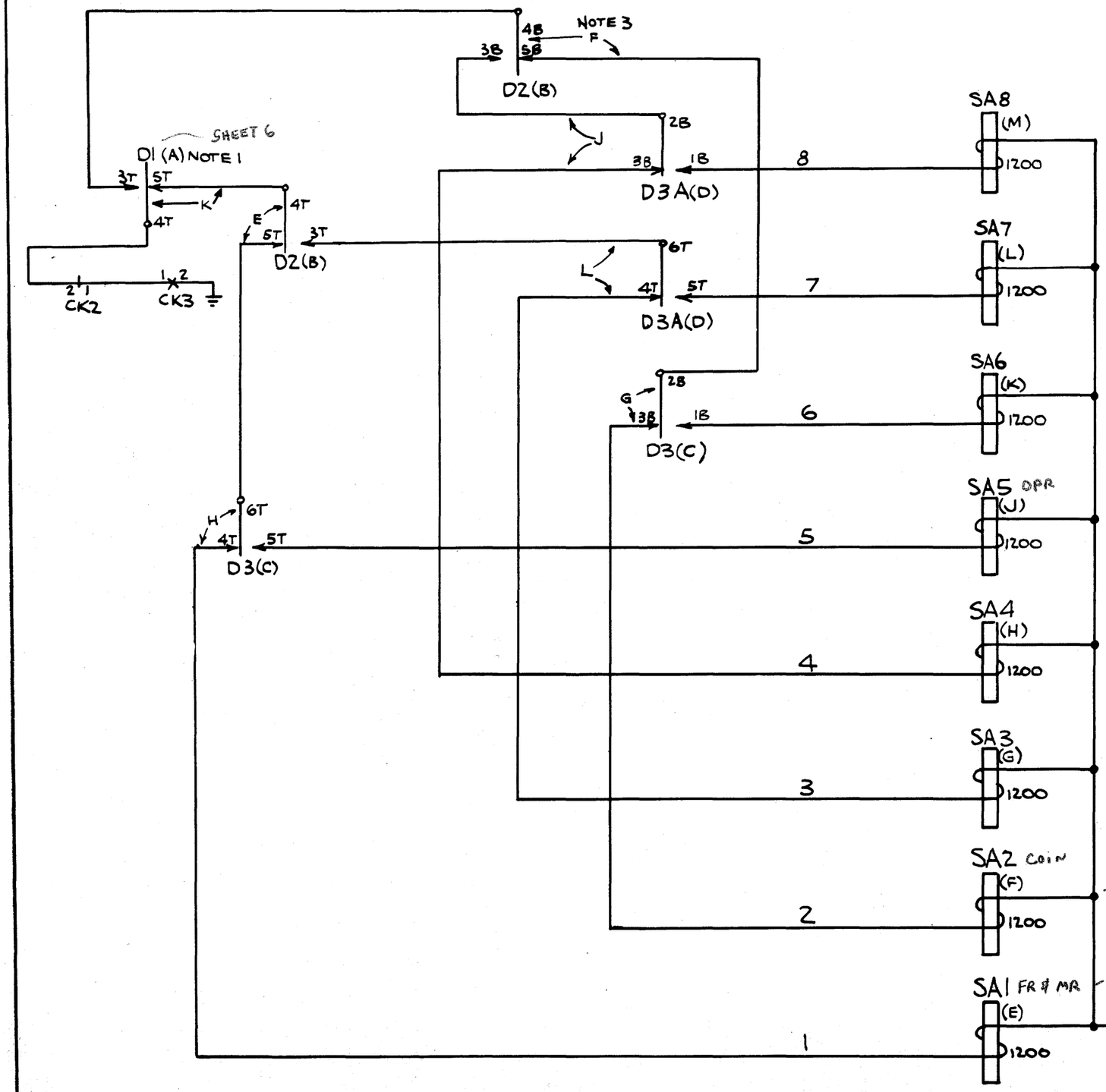

SEQUENCE CHART

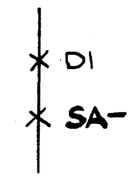

1. LETTERS IN PARENTHESIS DENOTE OPTIONAL APPARATUS
2. APPARATUS (A),(B),(C),(D),(E),(F),(G),(H),(J),(K),(L), AND(M) ARE FURNISHED AS REQUIRED TO DISTINGUISH THE VARIOUS CLASSES OF SERVICE SERVED BY THE OFFICE

TYPICAL USAGE OF RELAYS D1, D2, & D3 (FOR 5 CLASSES)

CLASS OF SERVICE	D-RELAY OPERATED	SA-RELAY OPERATED
~~FLAT RATE~~ NON-COIN	NONE	SA1 - NON-COIN
~~MESSAGE RATE~~ COIN	D1 "FT" GRD FROM LINK	SA2 - COIN
PUBLIC COIN	D2 "FR" GRD FROM LINK	SA3
SEMI PUBLIC	D1,D2	SA4
OPERATOR	D3	SA5

3. WHEN ANY OF APPARATUS (A),(B),(C), OR (D) IS NOT FURNISHED, LOOP LEADS AT THE POSITIONS OF THE RELAYS NOT FURNISHED AS FOLLOWS.

APPARATUS OMITTED	A	B	C	D
LOOP LEADS DESIGNATED	K	E,&F	G,&H	J,&L

SA1 & SA2 ARE USED ONLY ON SPECIAL CODES
IE; OPR - CAMA - ETC - VAC

S.D. 21177-011/019 DECODER CKT.

PLANT SCHOOL
FOR TRAINING PURPOSES ONLY

DECODER
CLASS OF SERVICE RELAYS

9

PANEL SYSTEM
BATTERY CUT-OFF

OS-336

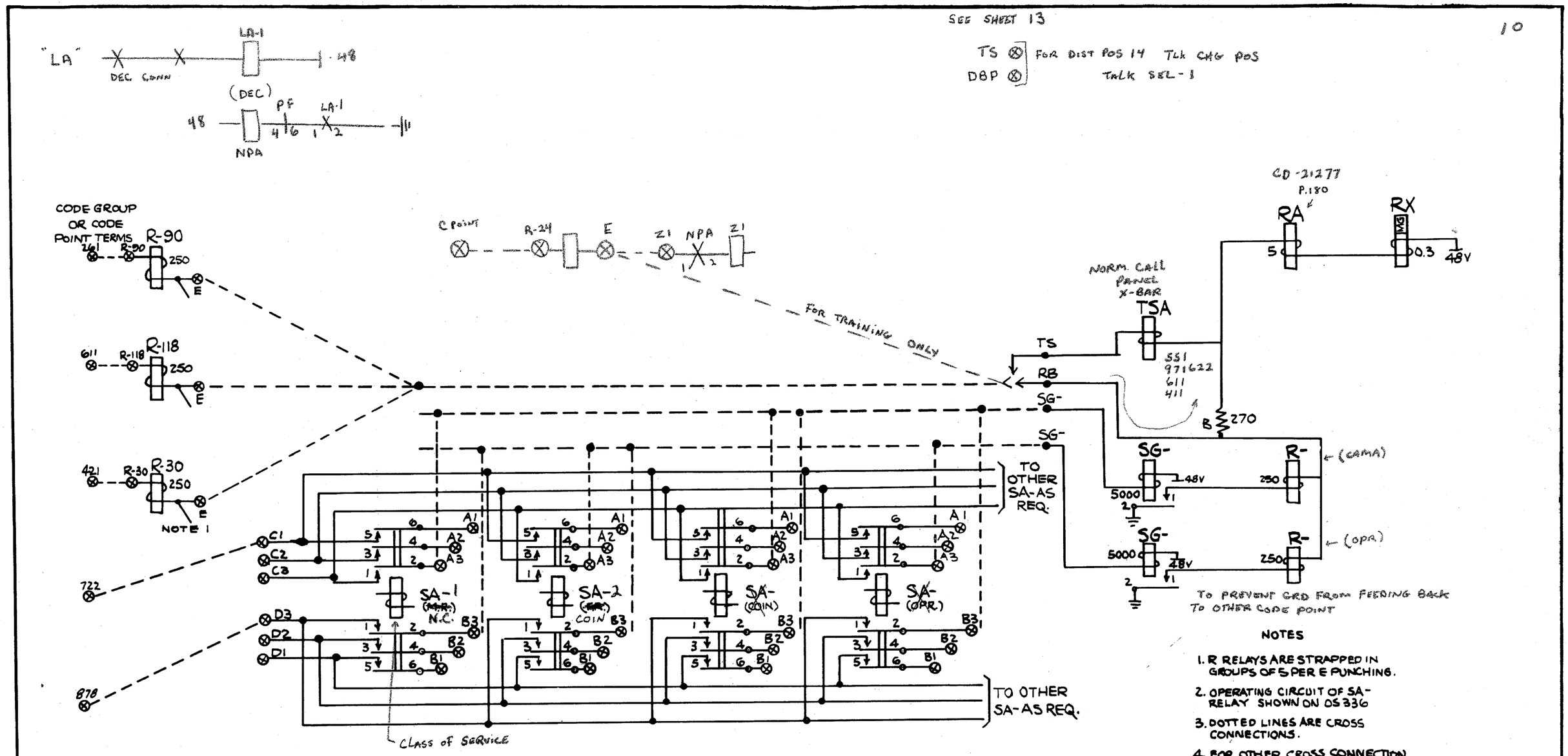

NOTES

1. R RELAYS ARE STRAPPED IN GROUPS OF 5 PER E PUNCHING.
2. OPERATING CIRCUIT OF SA-RELAY SHOWN ON OS 336
3. DOTTED LINES ARE CROSS CONNECTIONS.
4. FOR OTHER CROSS CONNECTION DATA SEE BSP SECT. A 362.007

BSP 215-141-301

S.D. 21277-011/019 DECODER

PLANT SCHOOL FOR TRAINING PURPOSES ONLY	
OPERATION OF ROUTE RELAYS	10
PANEL SYSTEM BATTERY CUTOFF	OS-337

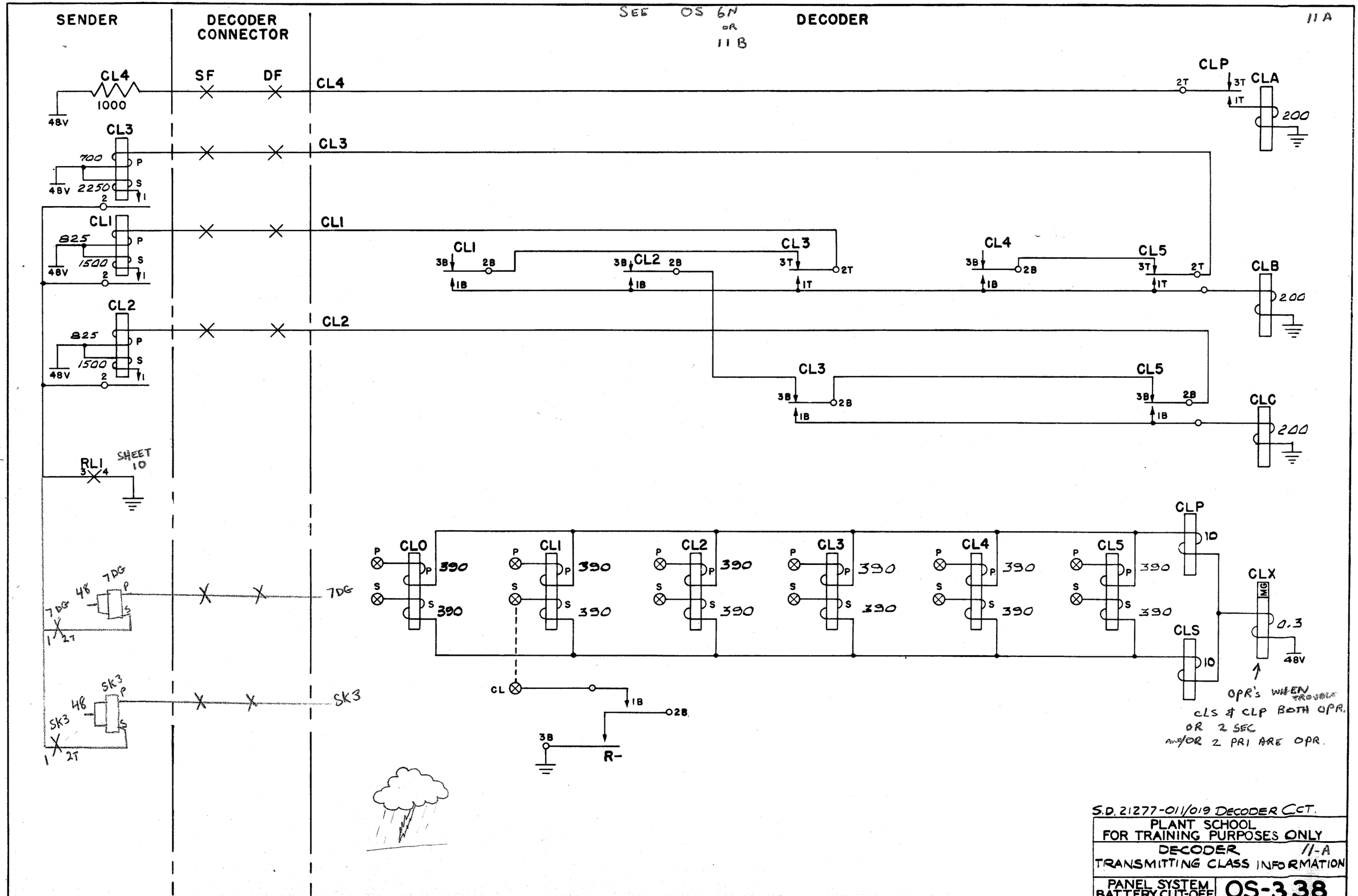

SEE OPPOSITE P. 11A

OS-308 # 20

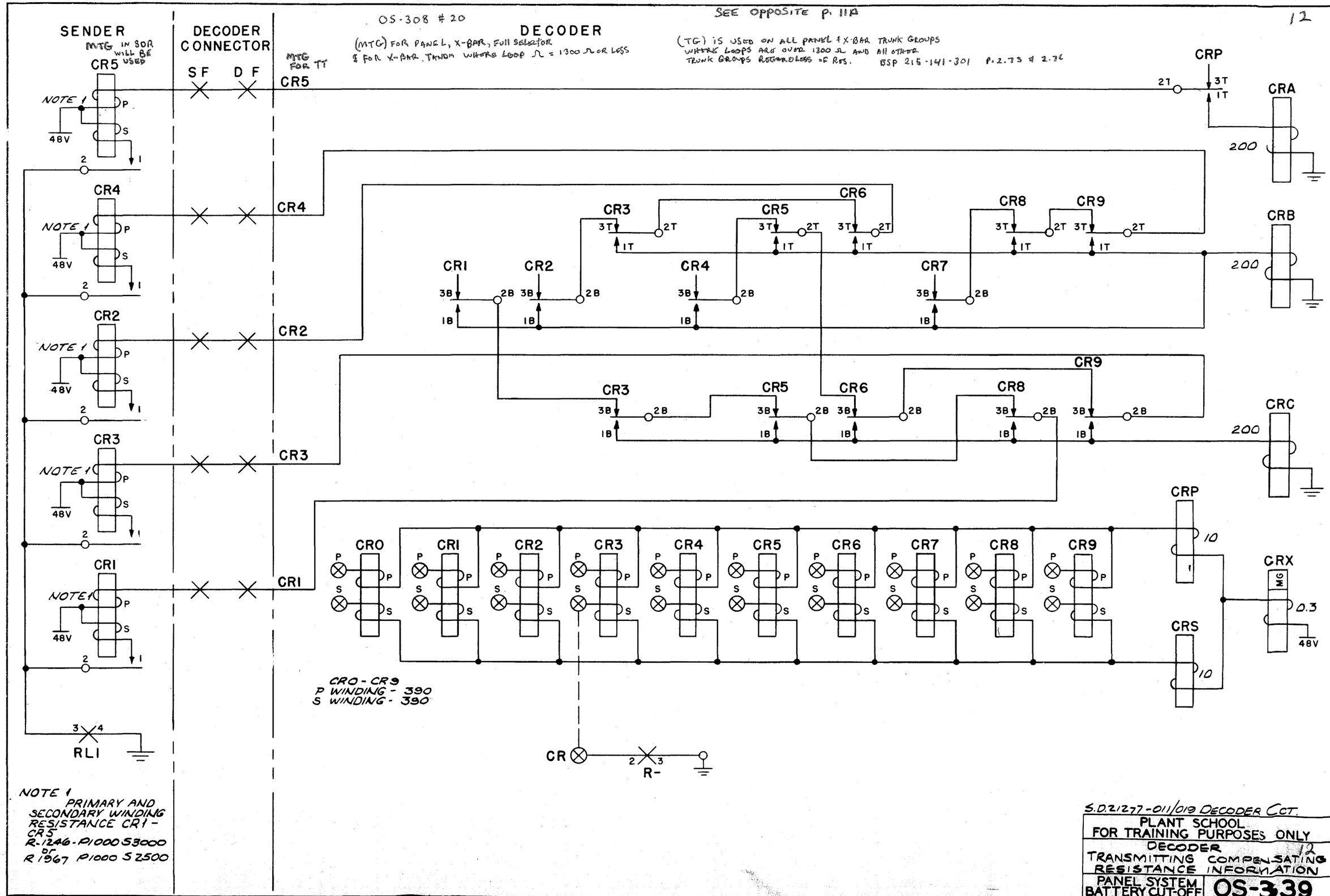

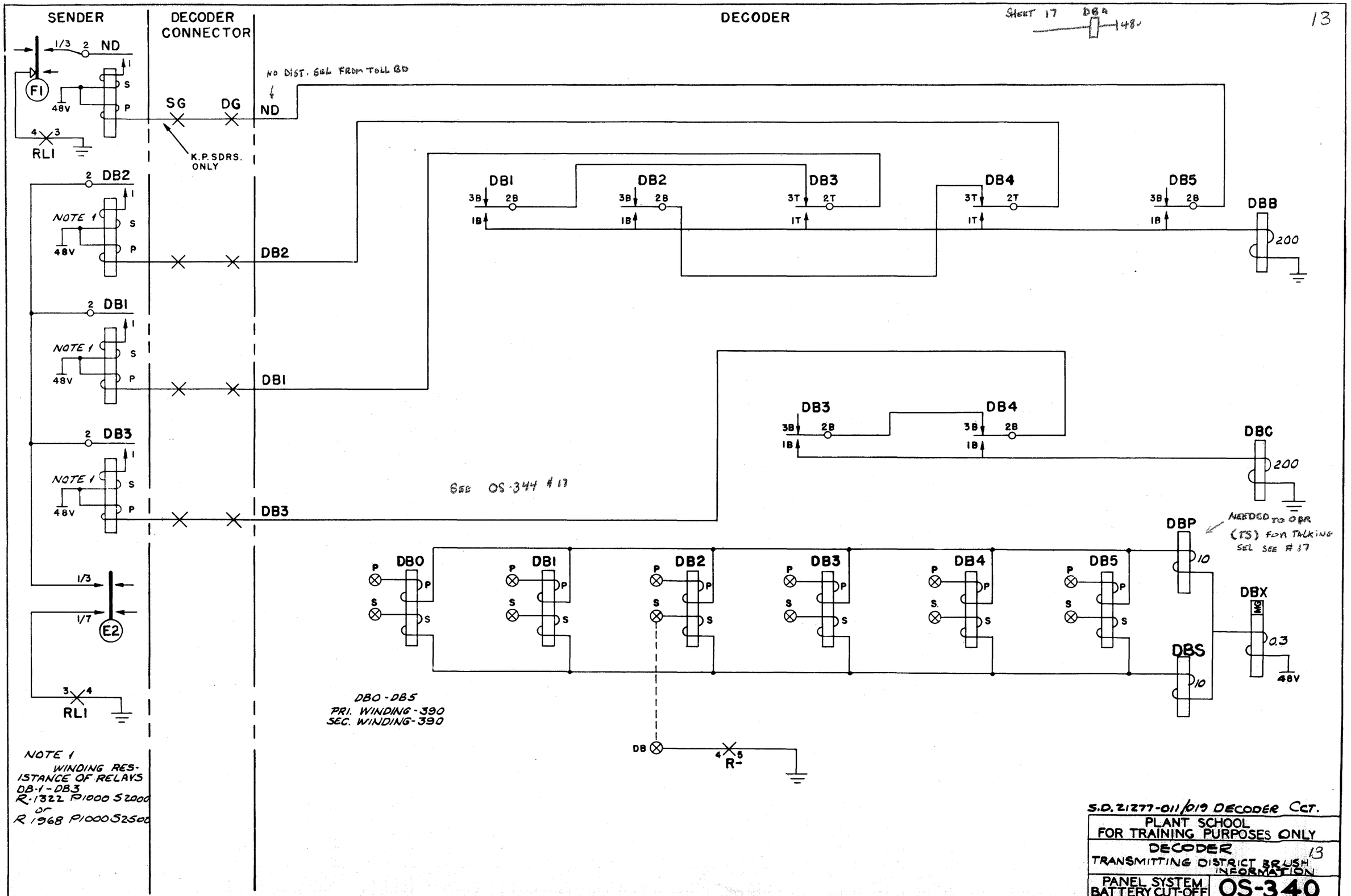

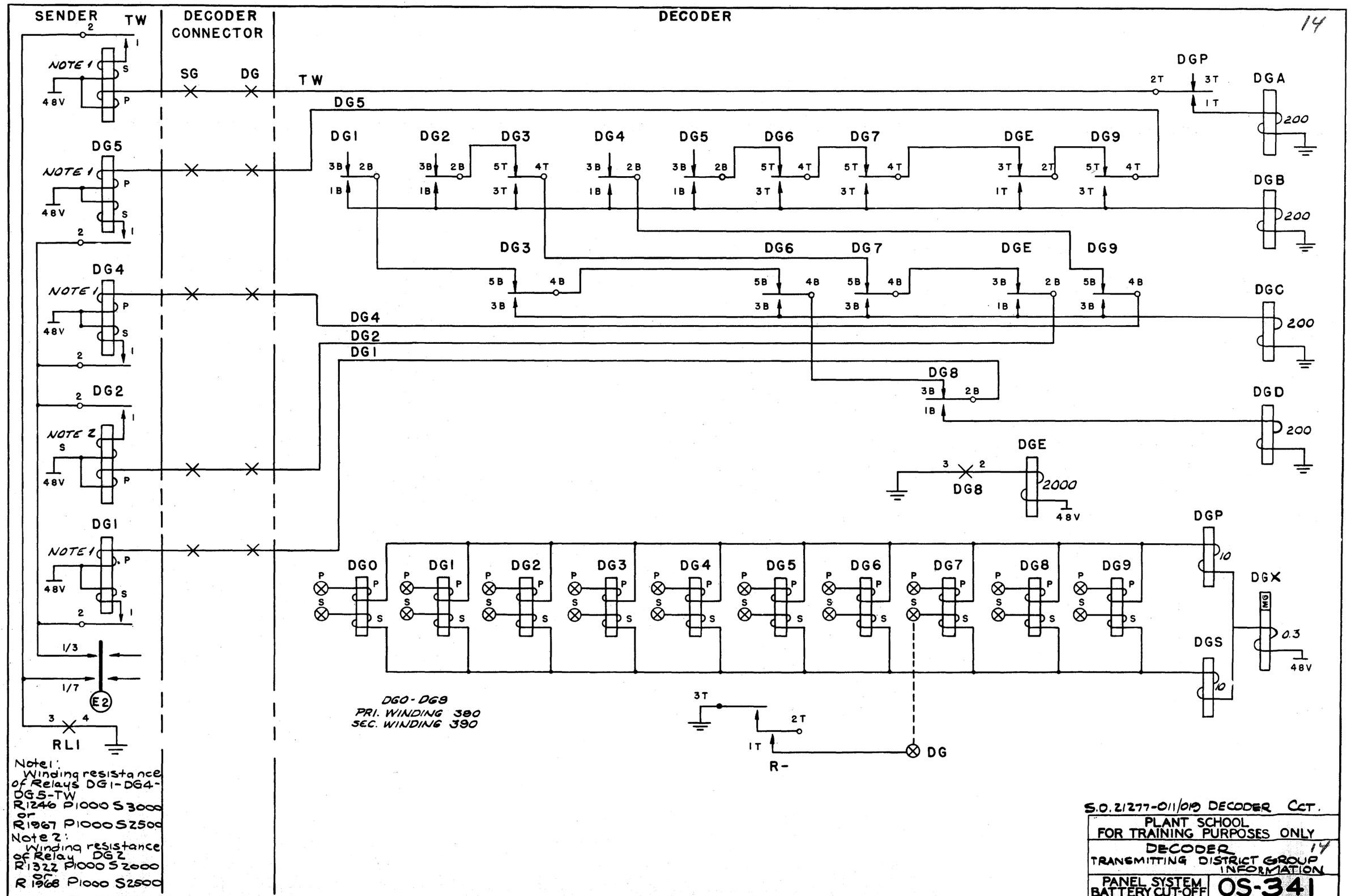

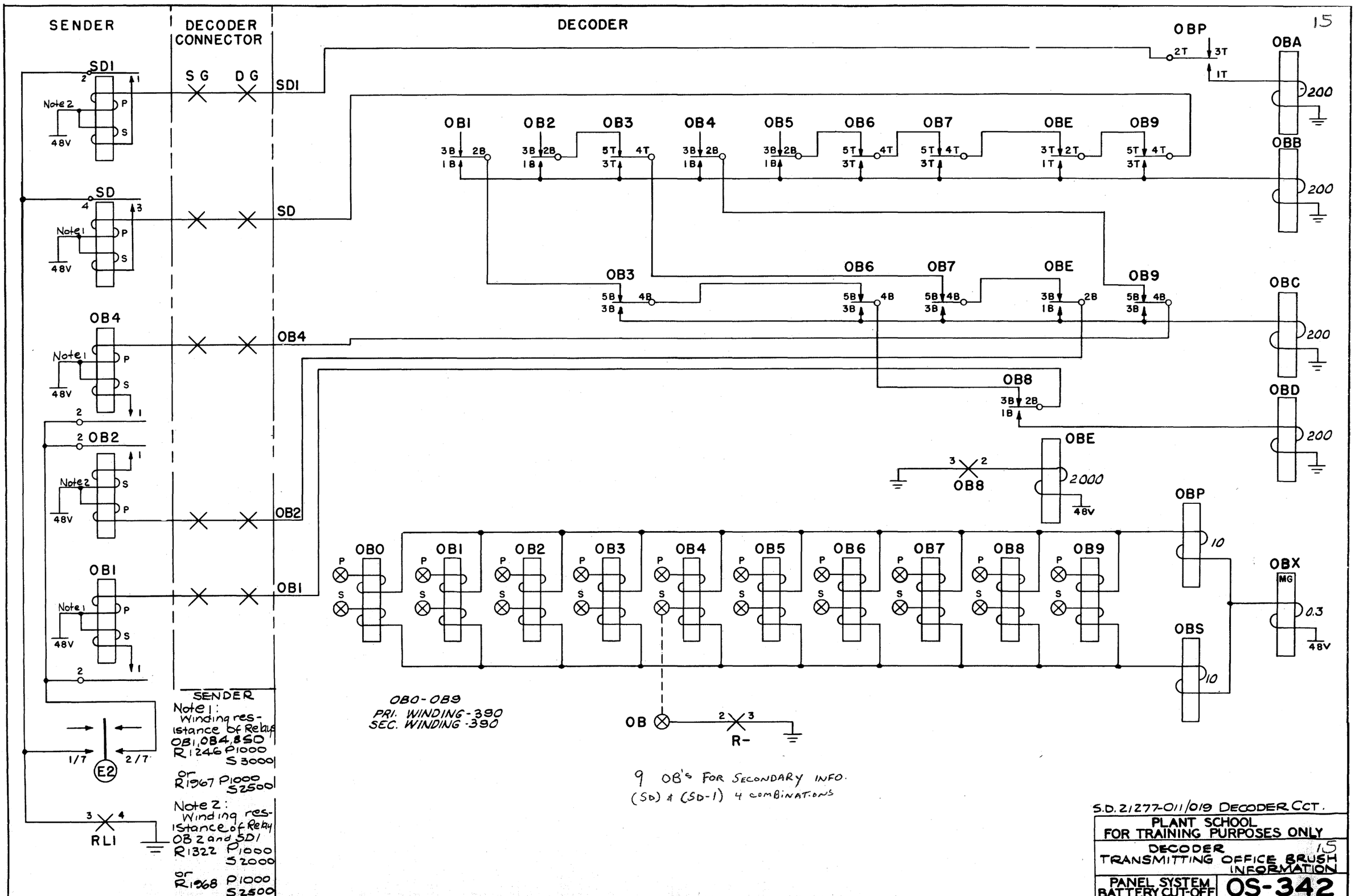

S.D. 21277-011/019 DECODER CCT.

PLANT SCHOOL
FOR TRAINING PURPOSES ONLY

DECODER
TRANSMITTING OFFICE BRUSH INFORMATION

15

PANEL SYSTEM BATTERY CUT-OFF

OS-342

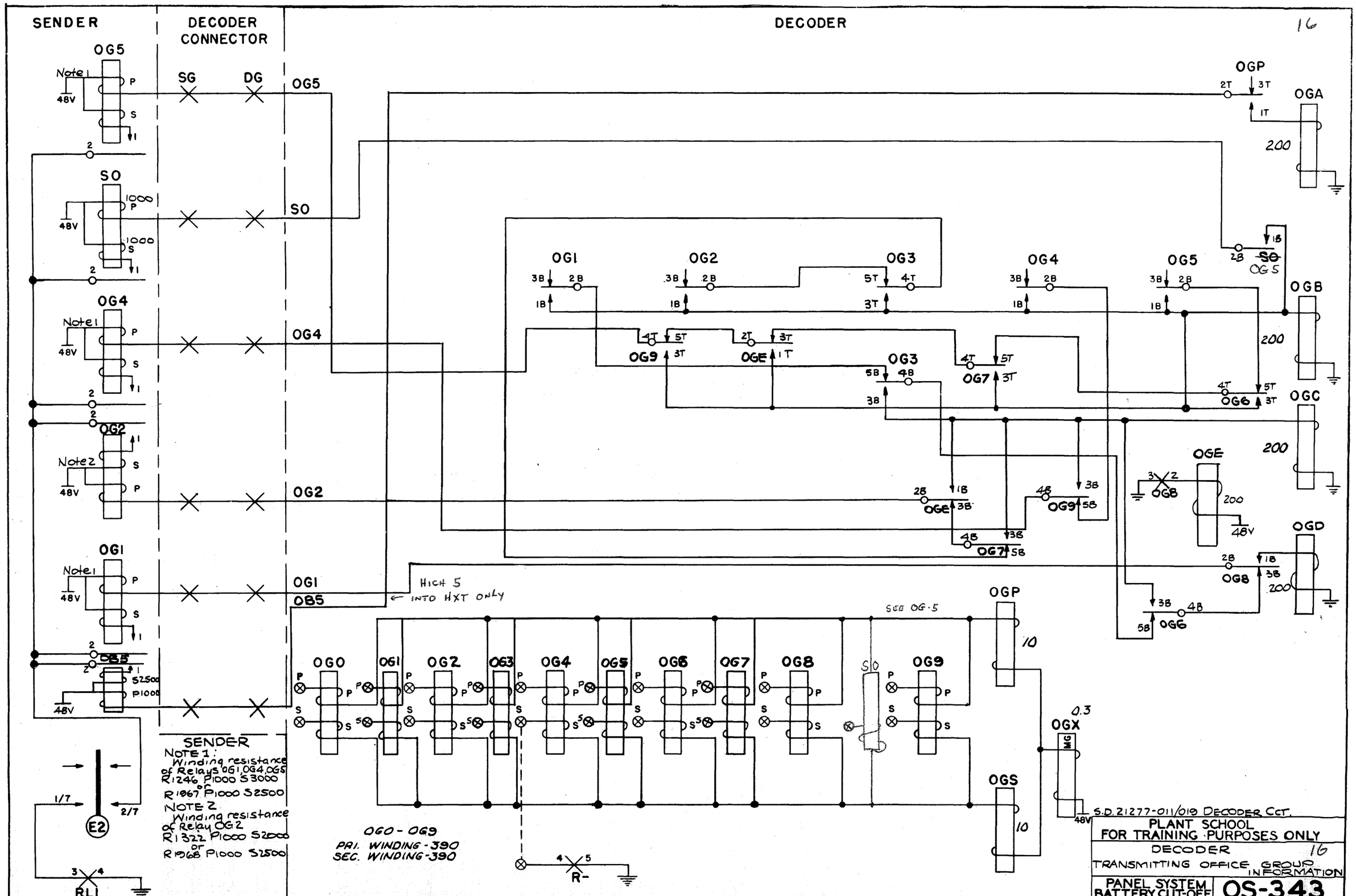

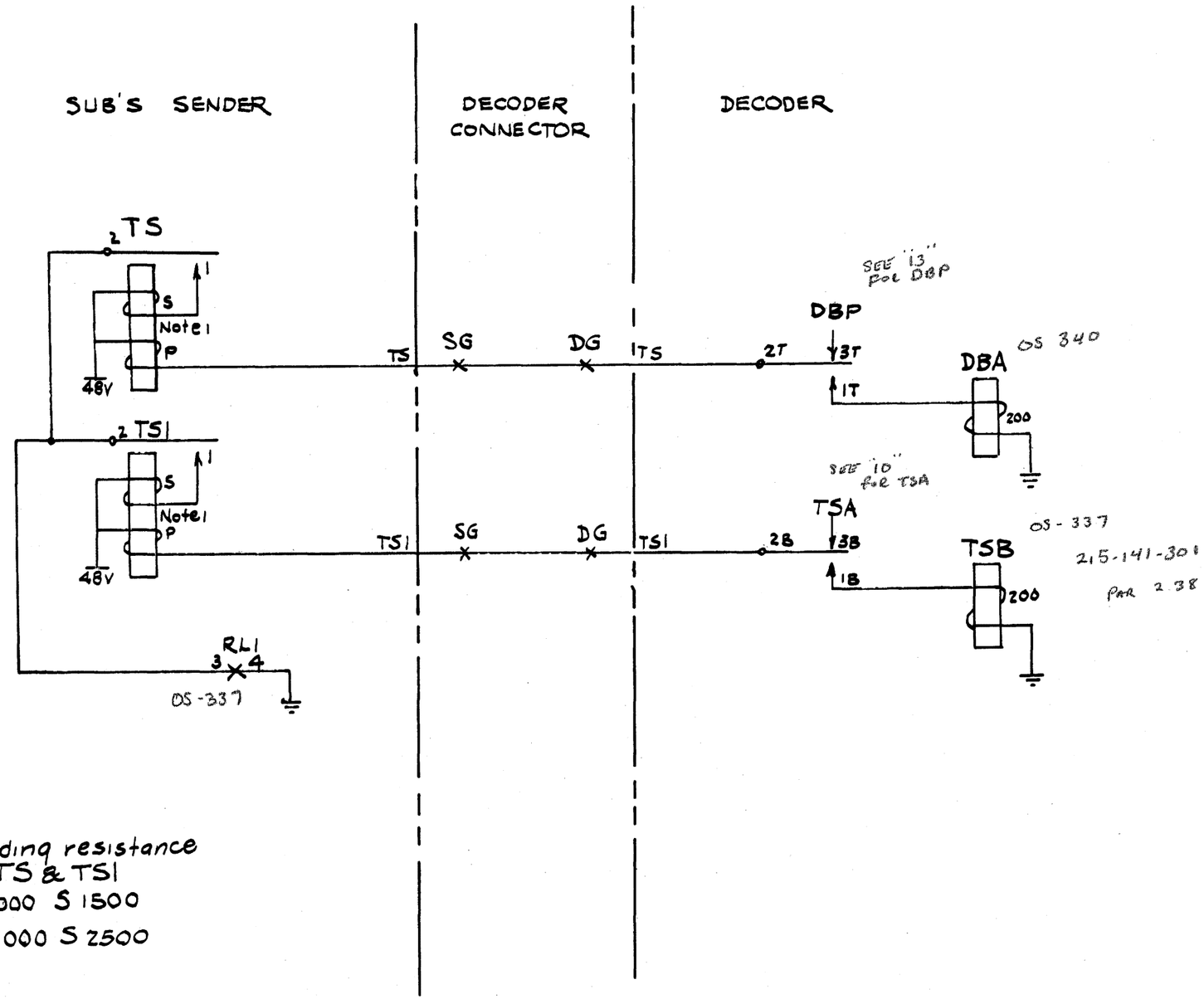

Note 1: Winding resistance at relays TS & TS1
E6451 P1000 S1500
or
R1966 P1000 S2500

S.D. 21277-011/019 DECODER CCT.

PLANT SCHOOL
FOR TRAINING PURPOSES ONLY

DECODER
TRANSMITTING TALK SELECTION INFORMATION

17

PANEL SYSTEM BATTERY CUT-OFF

OS-344

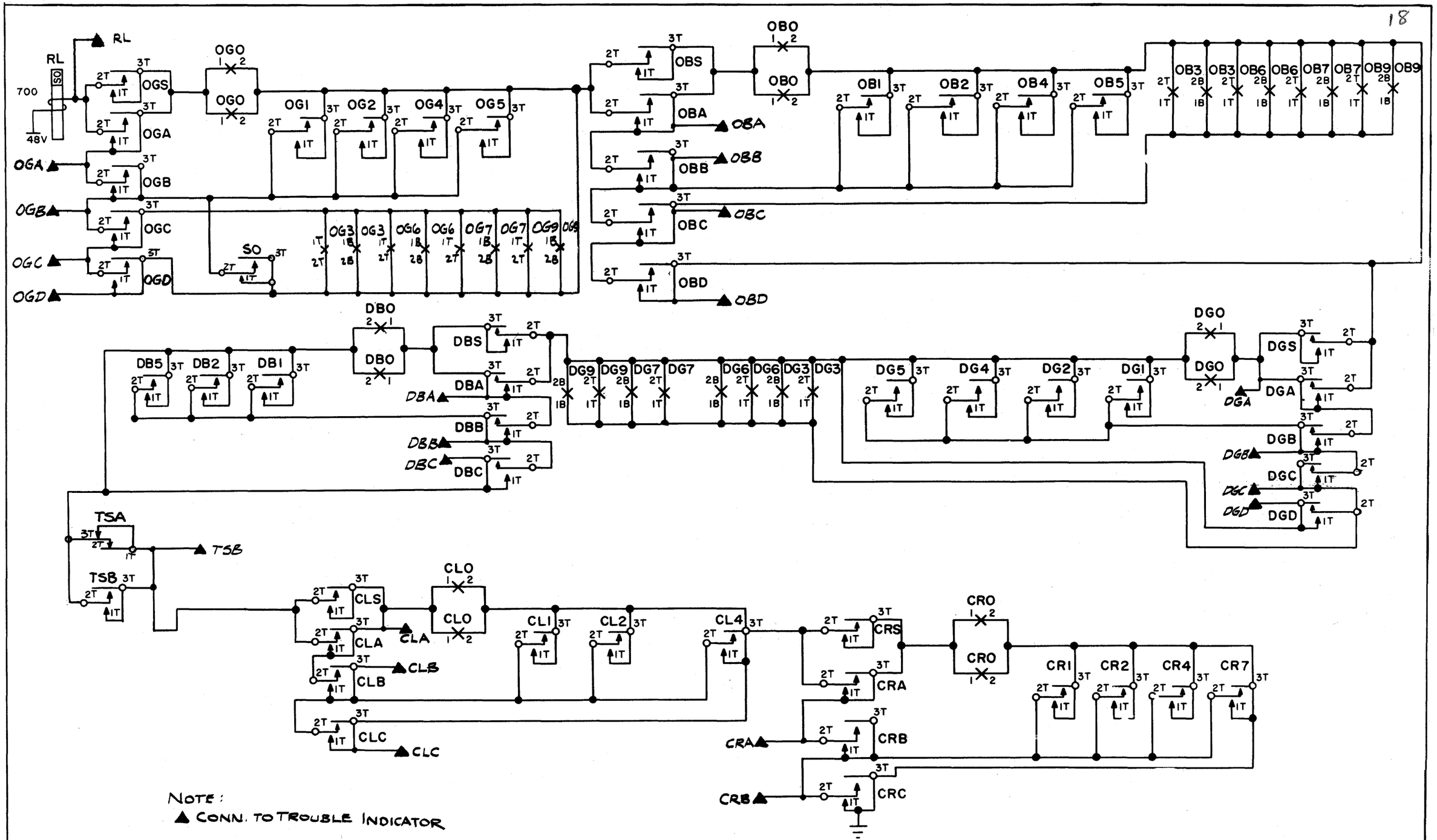

NOTE:
▲ CONN. TO TROUBLE INDICATOR

S.D.21277-011/019 DECODER CCT.

PLANT SCHOOL
FOR TRAINING PURPOSES ONLY

DECODER
CHECK OF TRANSMITTING LEADS AND RELEASE

PANEL SYSTEM BATTERY CUT-OFF

OS-345

ISSUE 1 JAN. 1950

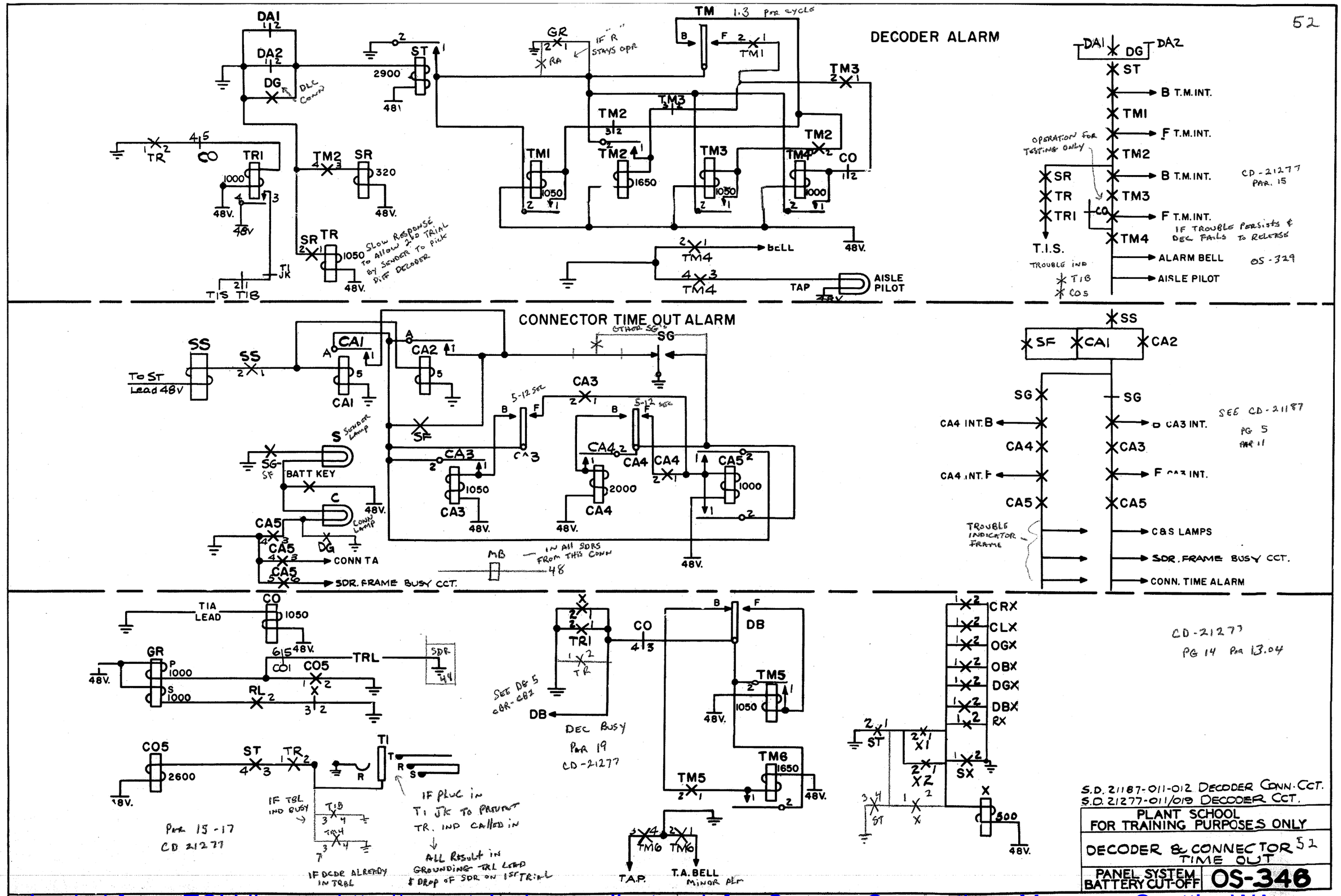

ISSUE 1 JAN. 1950

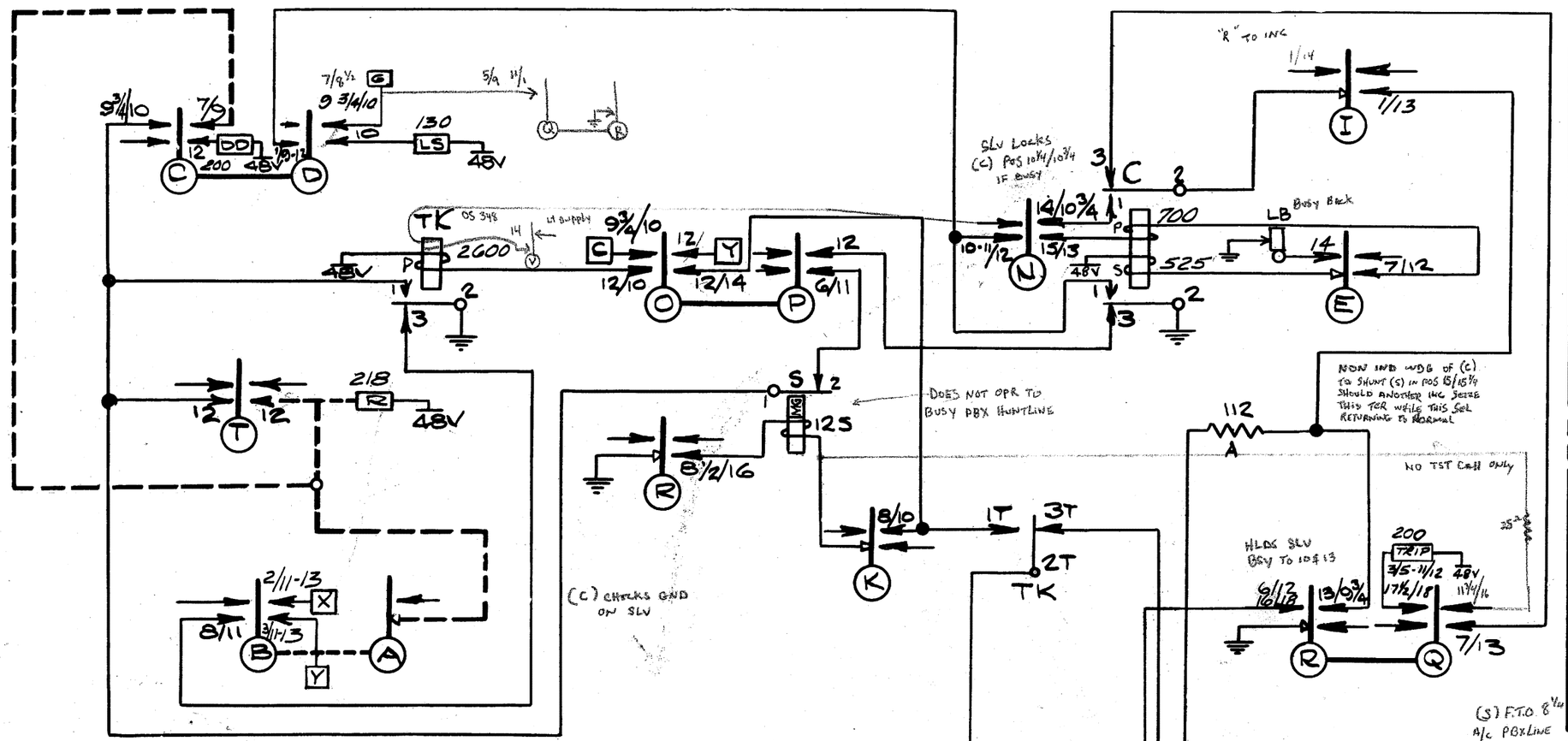

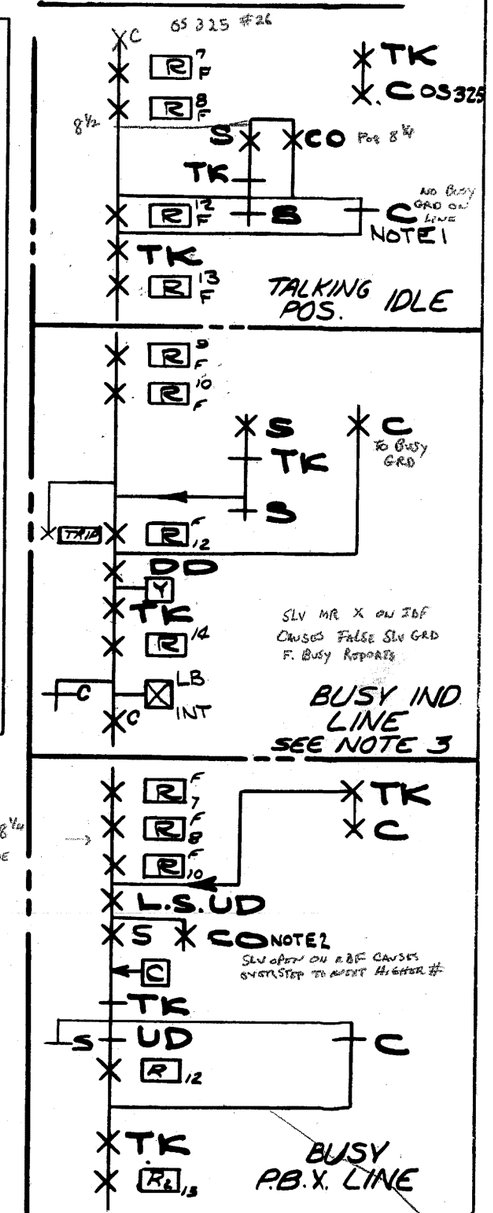

SLV CONDITIONS
SO 48V IDLE LINE
GRD + 3V = BSY PBX (S)
GRD + 8V = BSY IND (S)

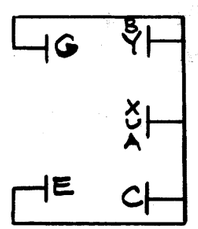

COMM STRAPPING

4 CONDITIONS OF CALLED LINE

1. IDLE IND OR PARTY S(O) C-
2. IDLE P.B.X. LINE S(O) C-
3. BUSY IND. OR PARTY S(O) CX (DD)
4. BUSY P.B.X. LINE S (NO) CX (UD)
5. NO TST CALL

"S" RELAY VALUES

OPERATE .0134 12.7 ma
NON-OPERATE .012

NOTES - (C STILL OPERATED POS. 12 BUSY BACK)

1. "C" RELEASES WHEN SWITCH PASSES 10¼.
2. "S" OPER. ON AN IDLE IND OR IDLE LAST LINE OF P.B.X. ONLY
3. IF AN IDLE LINE IS FOUND C RELEASES.

ISSUE 1 9-26-49

S.D. 21200-01 FINAL CCT.

PLANT SCHOOL FOR TRAINING PURPOSES ONLY

LINE TESTING 29

PANEL SYSTEM BATTERY CUT-OFF OS-347

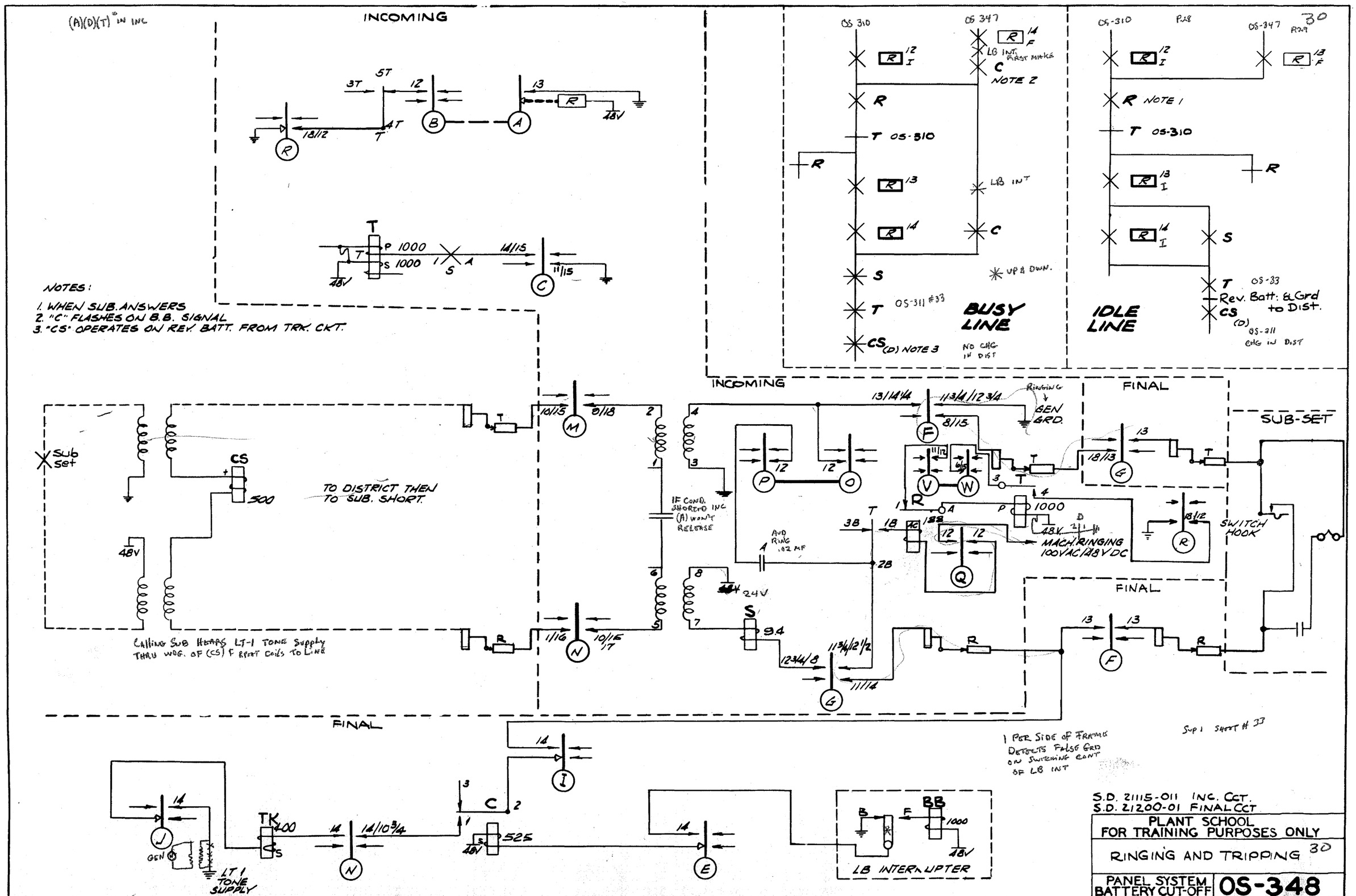

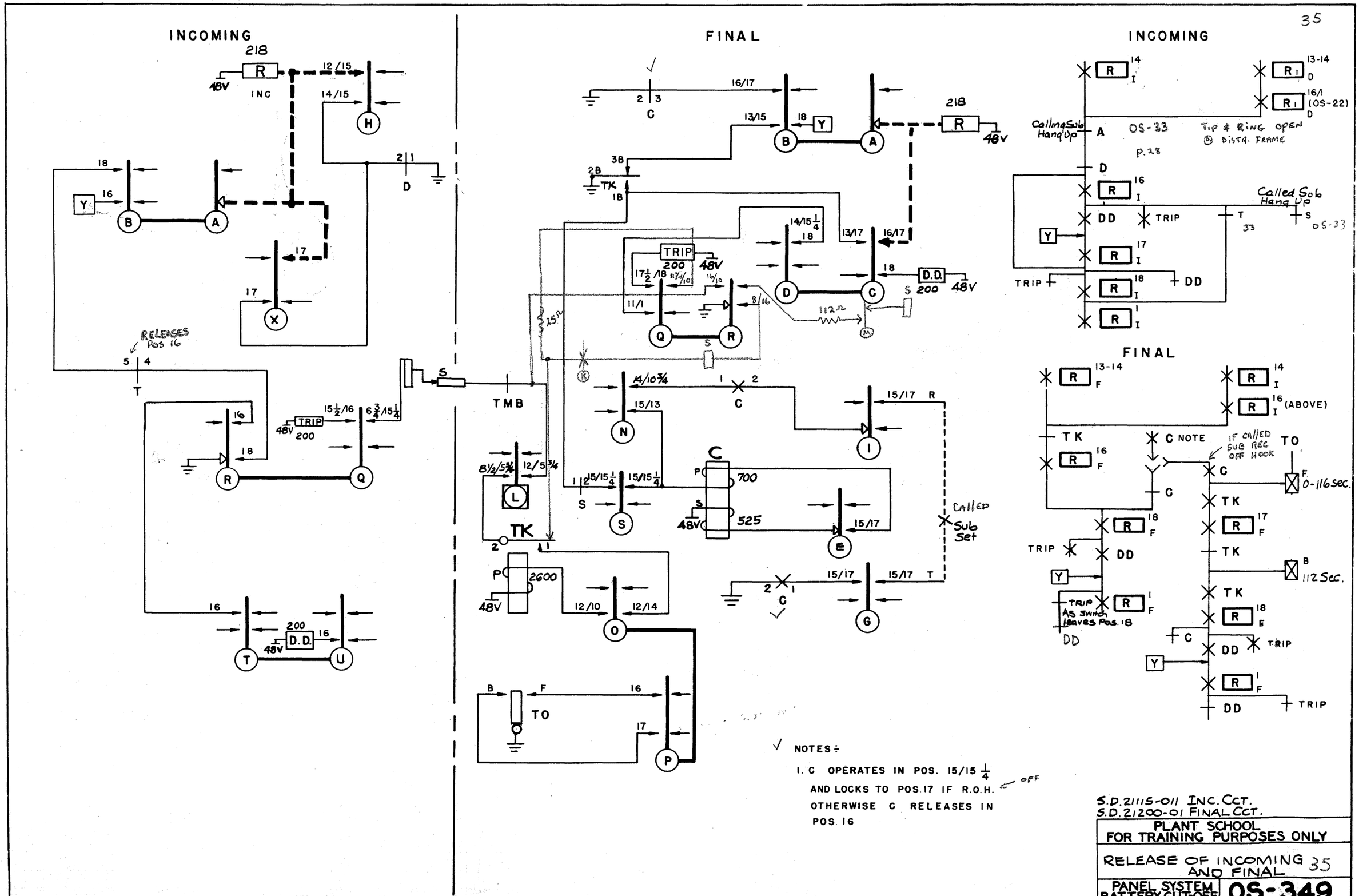

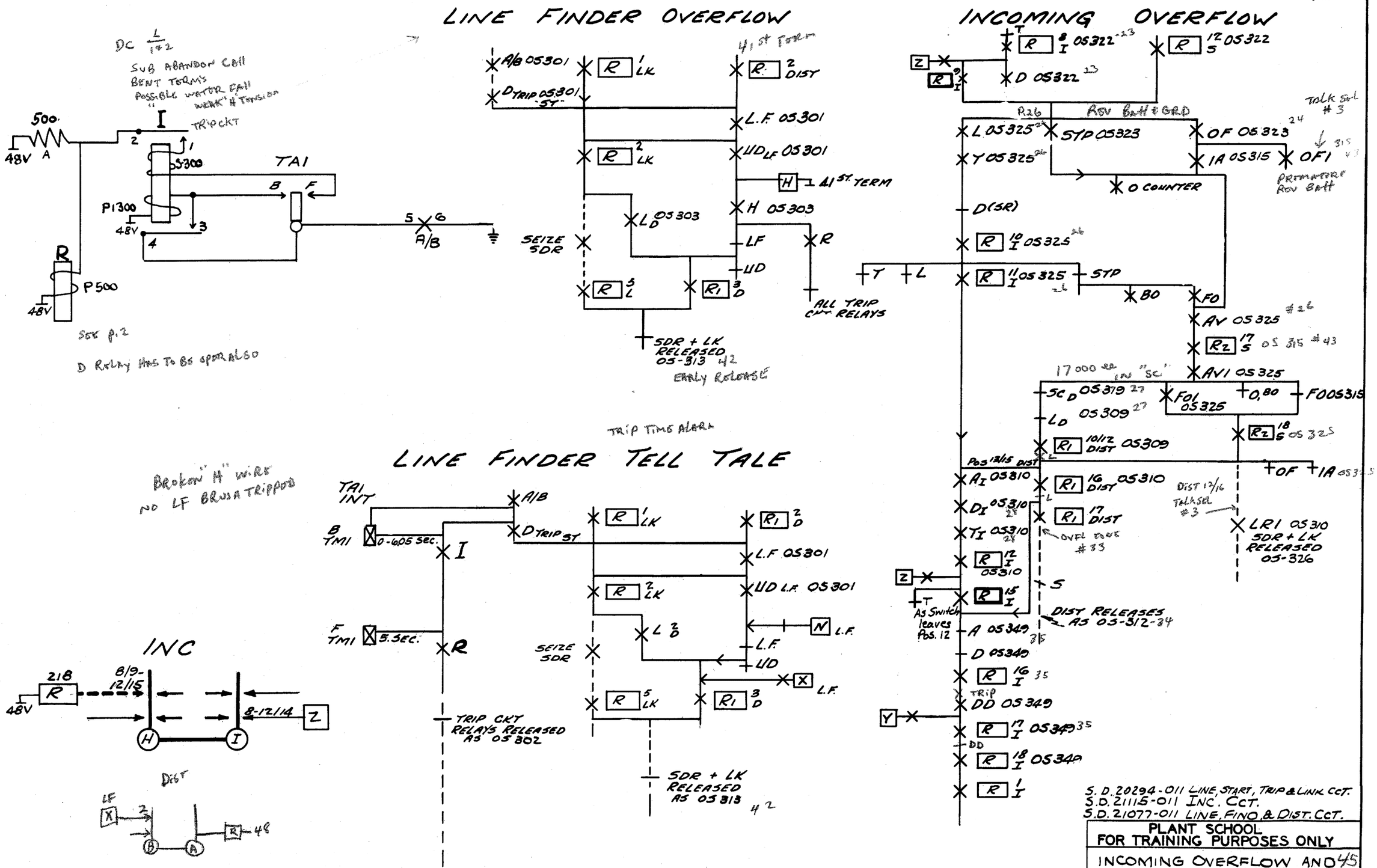

PLANT SCHOOL
FOR TRAINING PURPOSES ONLY

INCOMING OVERFLOW AND LINE FINDER OVERFLOW 45

PANEL SYSTEM BATTERY CUT-OFF **OS-350**

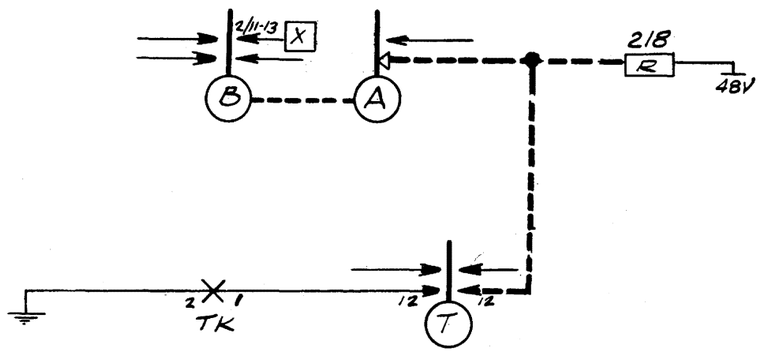

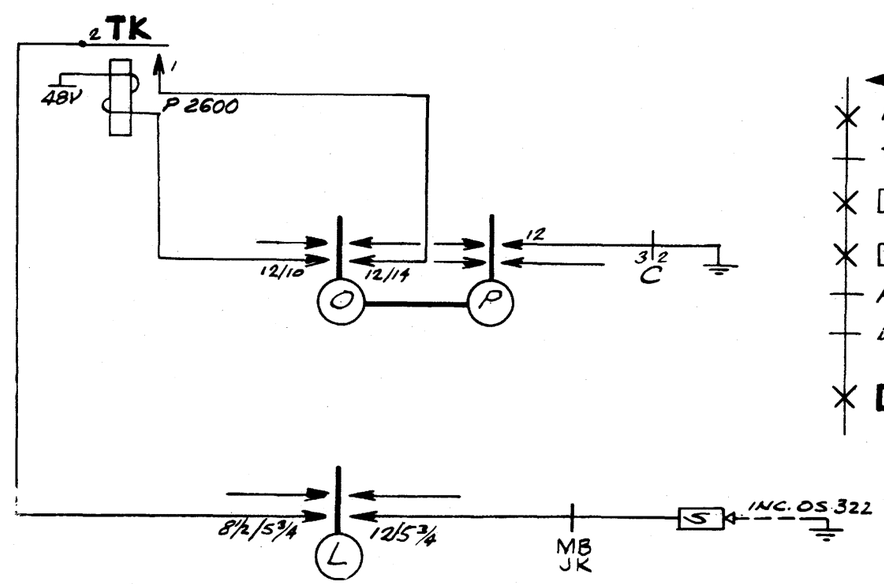

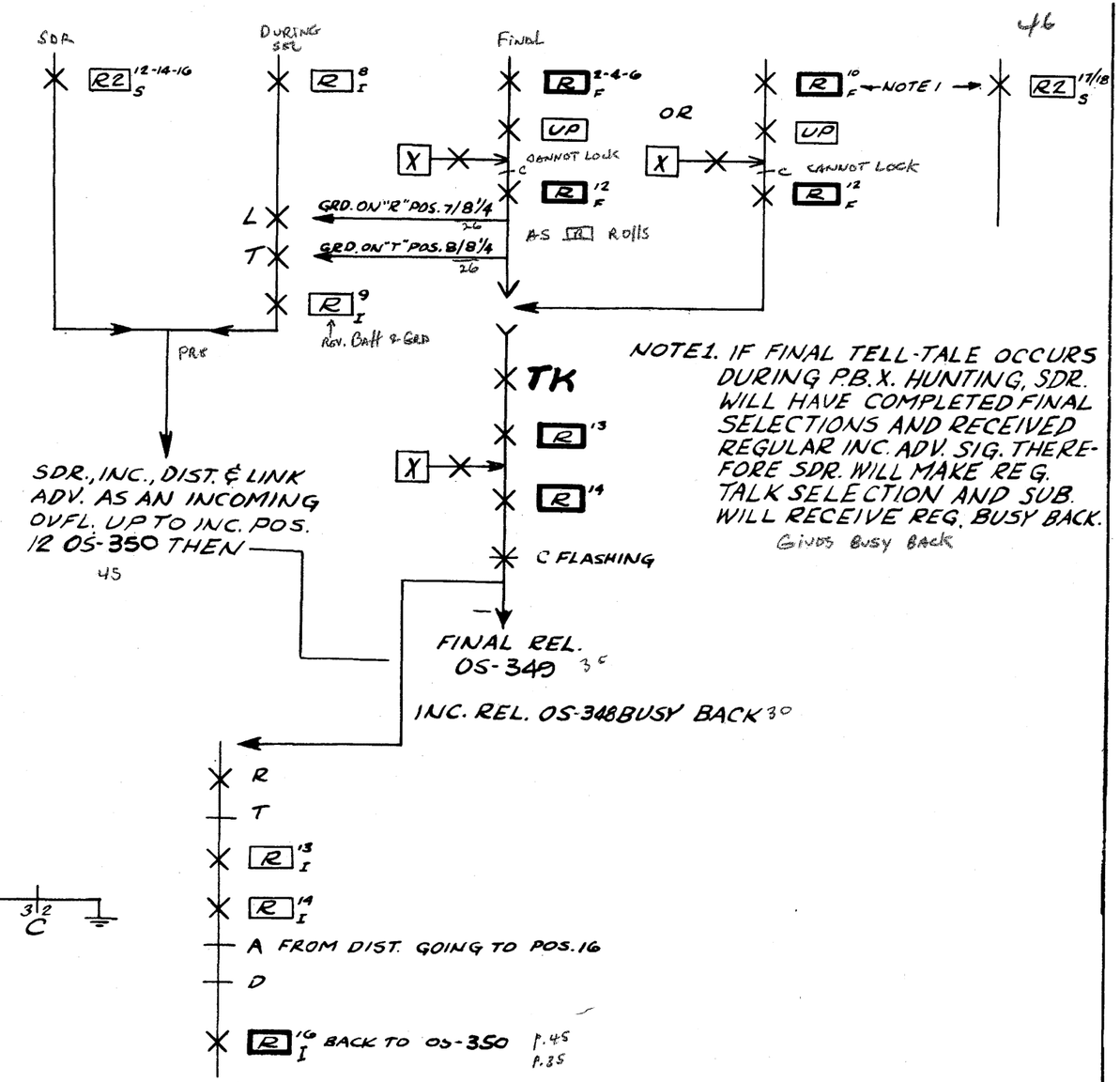

NOTE 1. IF FINAL TELL-TALE OCCURS DURING P.B.X. HUNTING, SDR. WILL HAVE COMPLETED FINAL SELECTIONS AND RECEIVED REGULAR INC. ADV. SIG. THEREFORE SDR. WILL MAKE REG. TALK SELECTION AND SUB. WILL RECEIVE REG. BUSY BACK.
GIVES BUSY BACK

IF NO BRUSH TRIPPED IN FINAL (S) CANNOT OPR. CALL GOES TO TT WHERE BUSY IS SENT BACK

S.O. 21200-01 FINAL CCT.

PLANT SCHOOL
FOR TRAINING PURPOSES ONLY

FINAL TELL TALE 46

PANEL SYSTEM BATTERY CUT-OFF **OS-351**

ISSUE 2 OCT. 19, 1945

ATTACH ONE SIDE OF DOUBLE CONNECTION LAMP TO DIST (E) CAM } (DEPENDING ON DIST)
(D) "
GRD OTHER SIDE OF LAMP
LIFT (E) 3 SPRING AWAY FROM THE CAM

1.

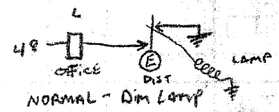

NORMAL - DIM LAMP

2.

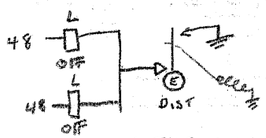

2 OFFICES ON 1 DISTRICT
BRIGHT LAMP

3.

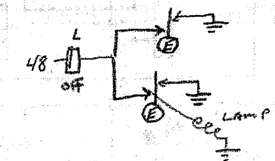

2 DISTRICTS TO ONE OFFICE
NO LAMP

IND 4 (E) CAM
PTY 3 (E) CAM

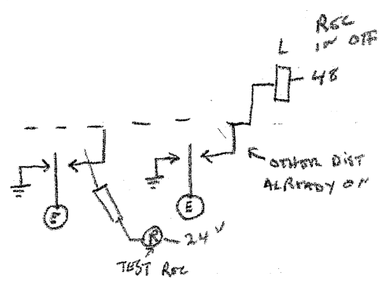

WHEN TESTING GO TO 24 V W/TEST REC TO SPRING ATTACHED TO SLV - W/ PROBE LIFT SPRING
CLICK ON CAM = NO DBL
NO CLICK ON CAM = DBL

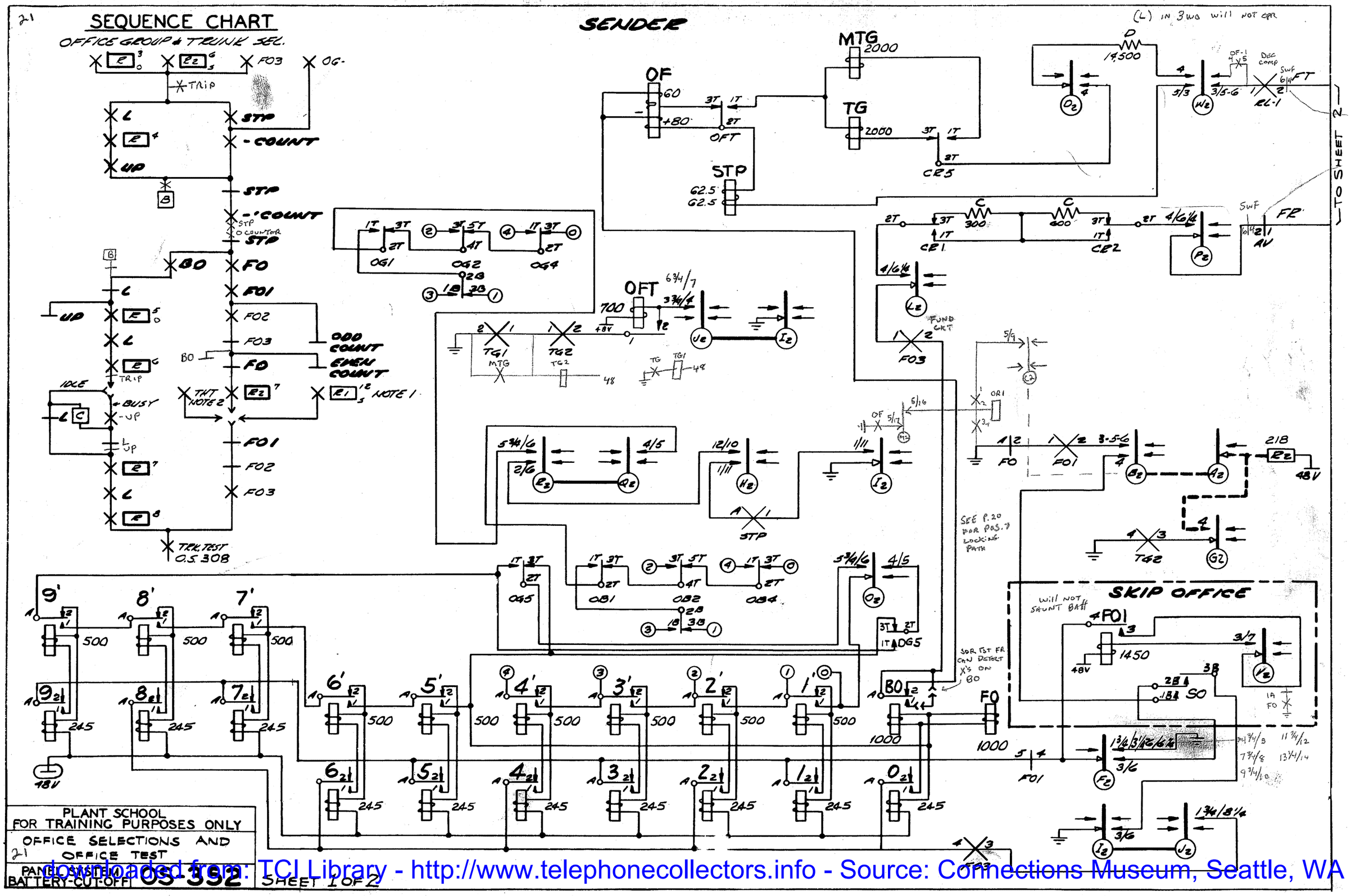

OFFICE (3 WIRE)

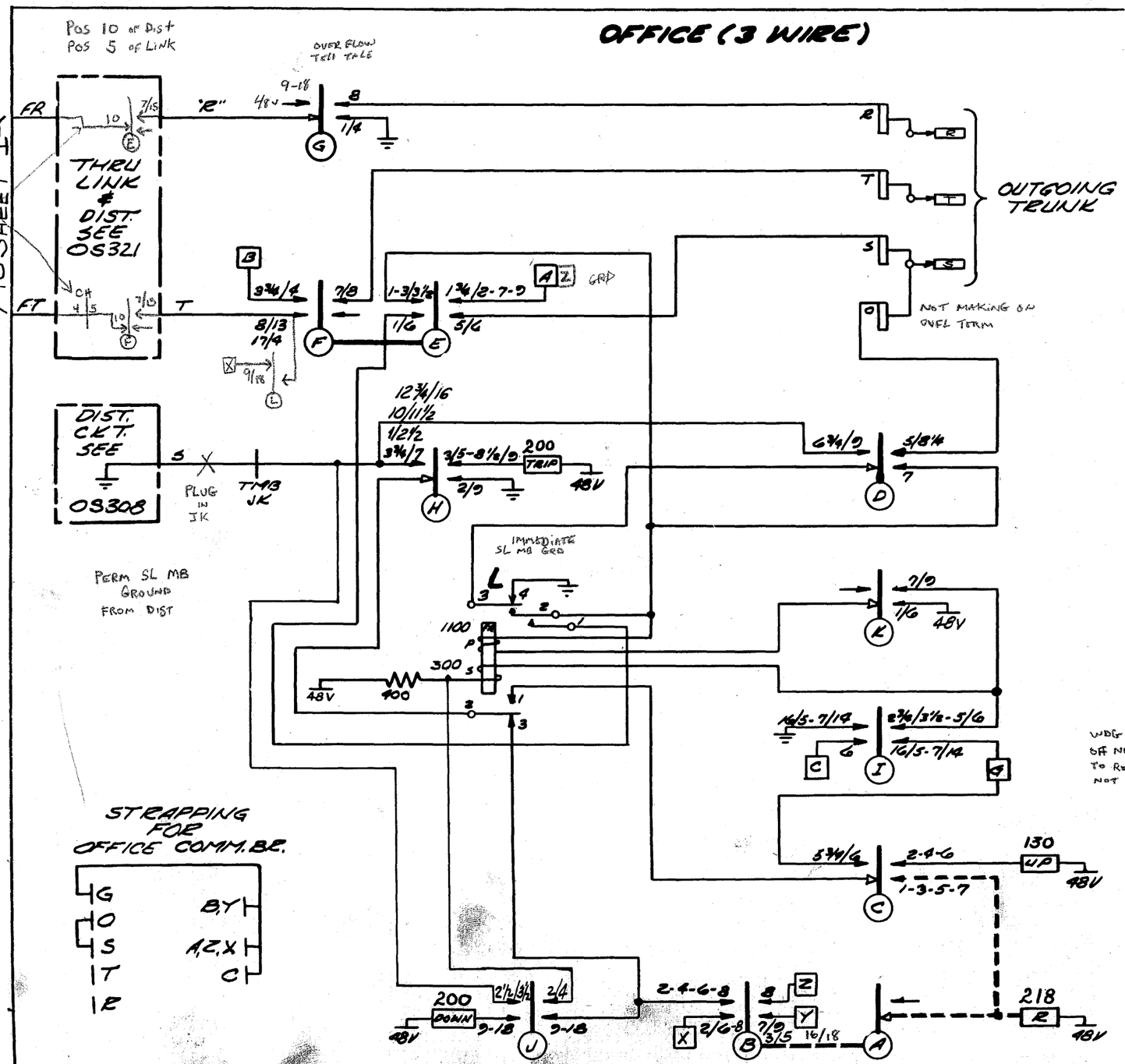

SEQUENCE CHART

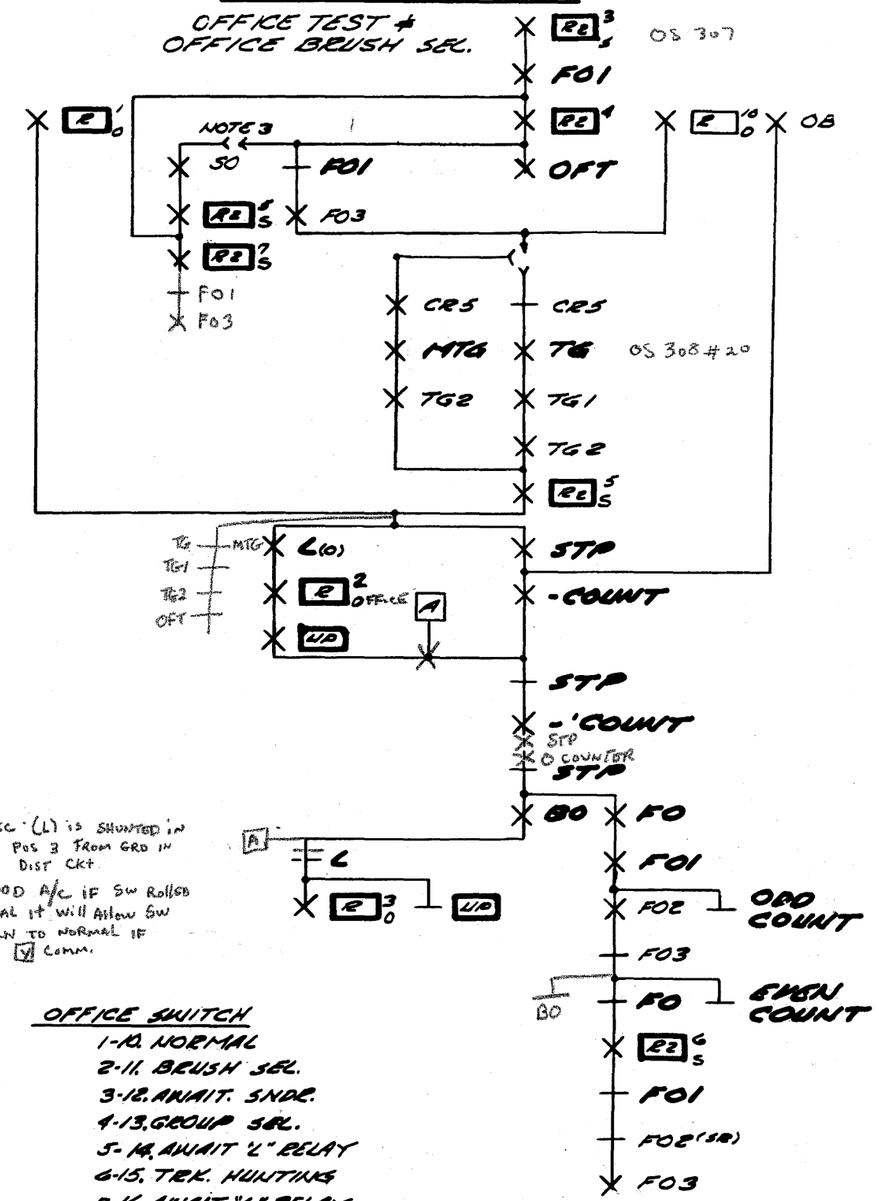

SEC. (L) IS SHUNTED IN POS 3 FROM GRD IN DIST CKT.

WDG GOOD A/C IF SW ROLLED OFF NORMAL IT WILL ALLOW SW TO RETURN TO NORMAL IF NOT ON [Y] COMM.

OFFICE SWITCH

1-10. NORMAL
2-11. BRUSH SEL.
3-12. AWAIT. SNDR.
4-13. GROUP SEL.
5-14. AWAIT "L" RELAY
6-15. TRK. HUNTING
7-16. AWAIT. "L" RELAY
8-17. TALKING
9-18. OVERFLOW & RETURN

SENDER "R2" SWITCH

3. DIST. GROUP
4. OFFICE TEST
5. OFFICE BRUSH
6. OFFICE GROUP
7. TRUNK TEST

NOTES-

1. ON PC1 AFTER STATION DELAY R1 SWITCH ADVANCES TO POS. #12 & RELEASES F01
2. ON F.M. AFTER THOUSANDS DIGIT IS RECORDED THT OPERATES & RELEASES F01 P. 20
3. ON SKIP OFFICE CALL 30 HOLDS F01 LOCKED UP & MOVES R2 SWITCH TO #7 FOR TRUNK TEST.

S.D. 21193-011/013 SUBS. SDR. CCT.
F.S. 240252 3 WIRE OFF. SEL. CCT.

PLANT SCHOOL FOR TRAINING PURPOSES ONLY

OFFICE SELECTIONS AND OFFICE TEST 21

PANEL SYSTEM BATTERY CUT-OFF **OS-352**

SHEET 2 OF 2

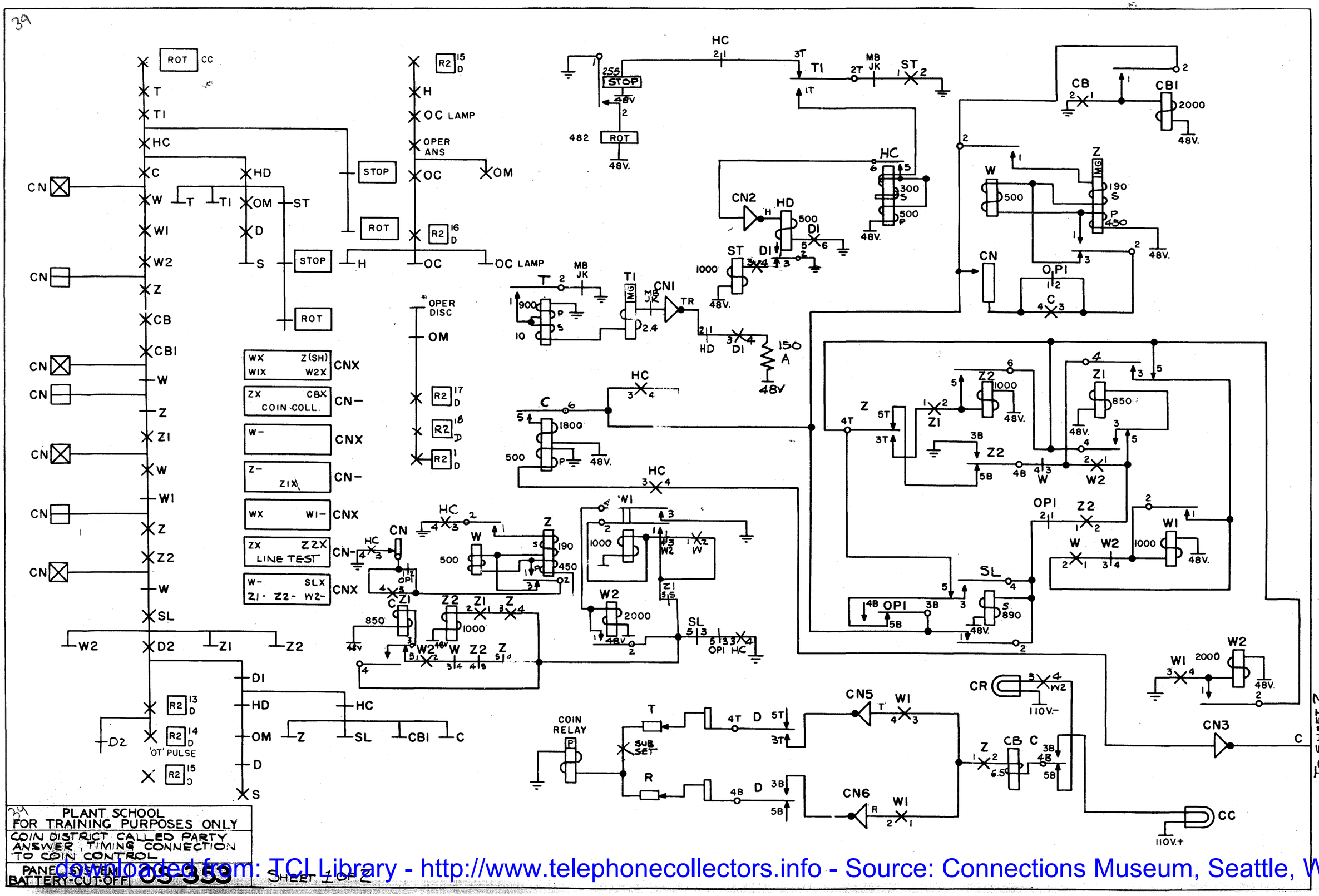

PLANT SCHOOL
FOR TRAINING PURPOSES ONLY

COIN DISTRICT CALLED PARTY ANSWER, TIMING CONNECTION TO COIN CONTROL

PANEL DESIGN
BATTERY-CUT-OFF 05-358 SHEET 1 OF 2

ISSUE 1
JAN. 1950

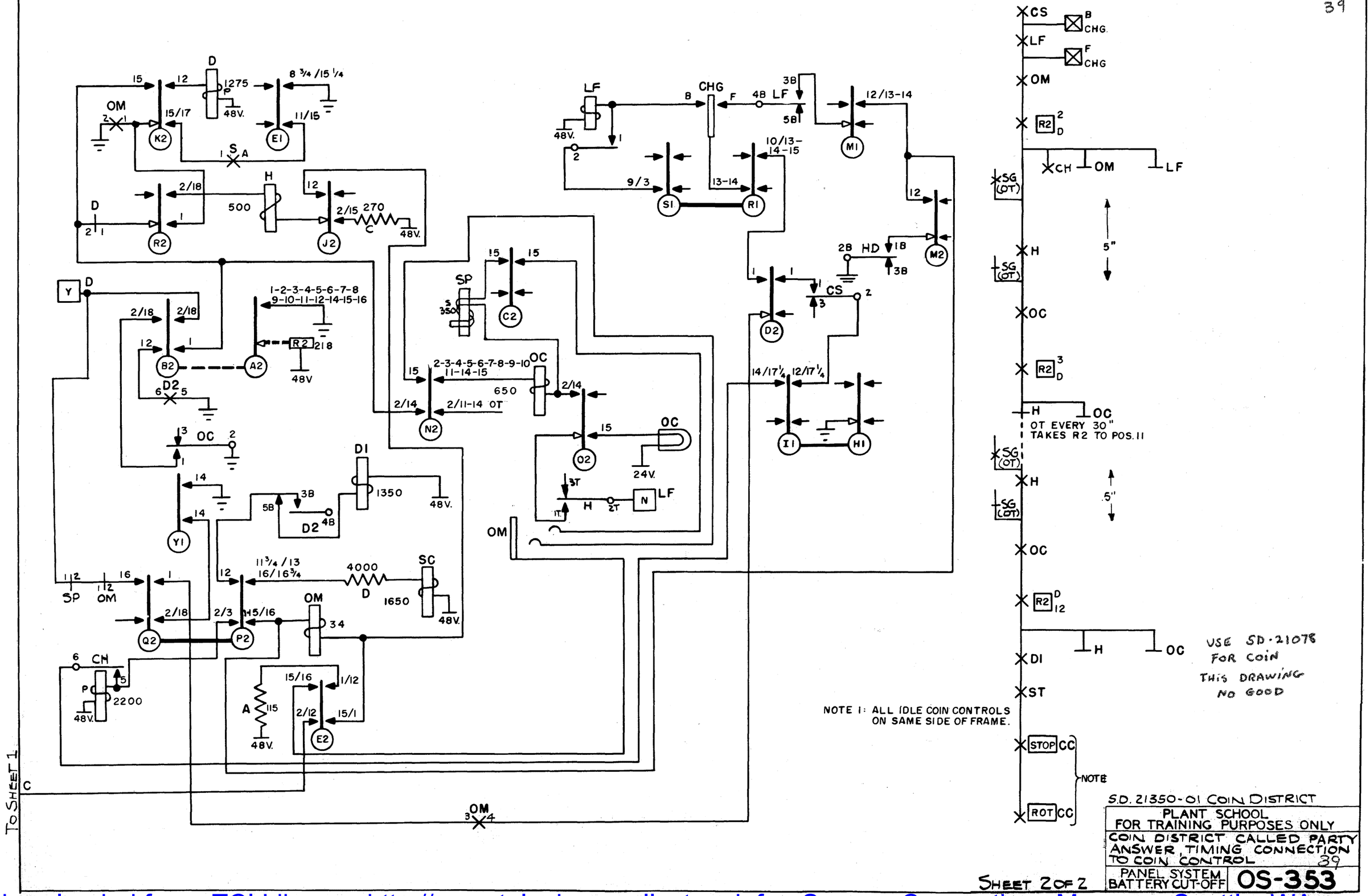

40

USE

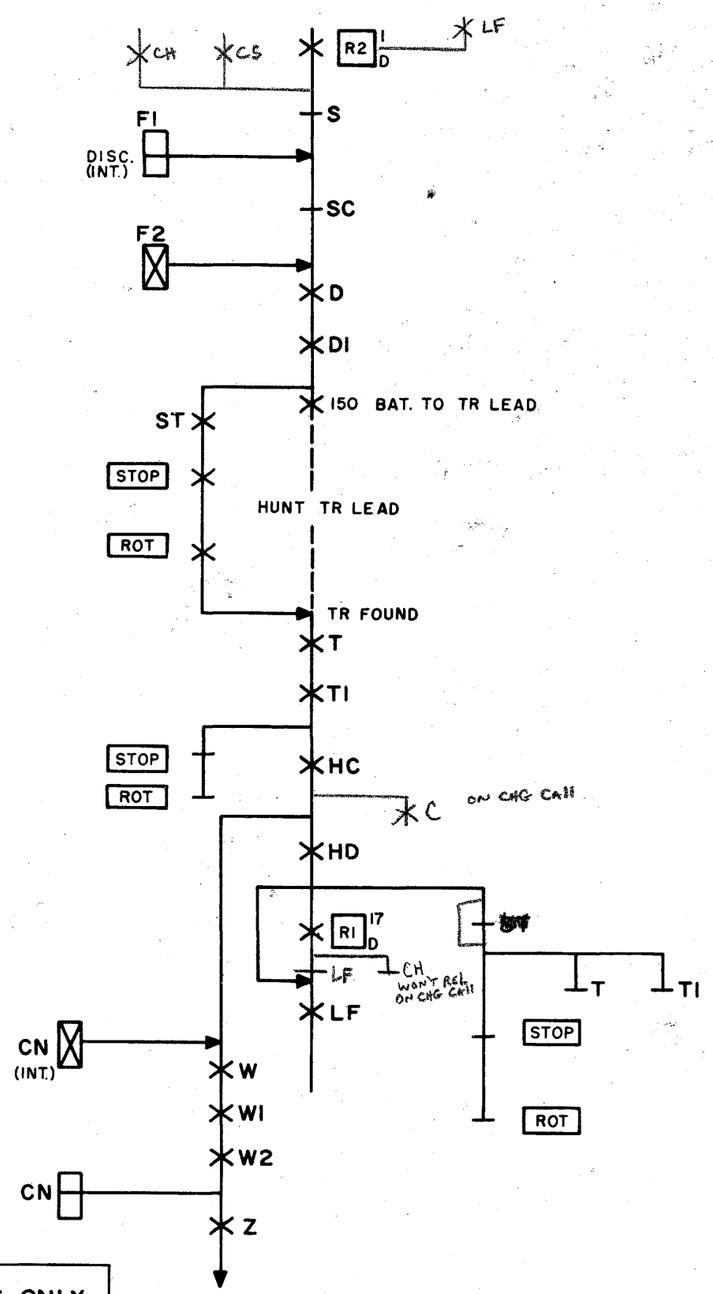

CB-1

2 & 3 B ARE OPENED

(LT) BLOCKED NON OPR

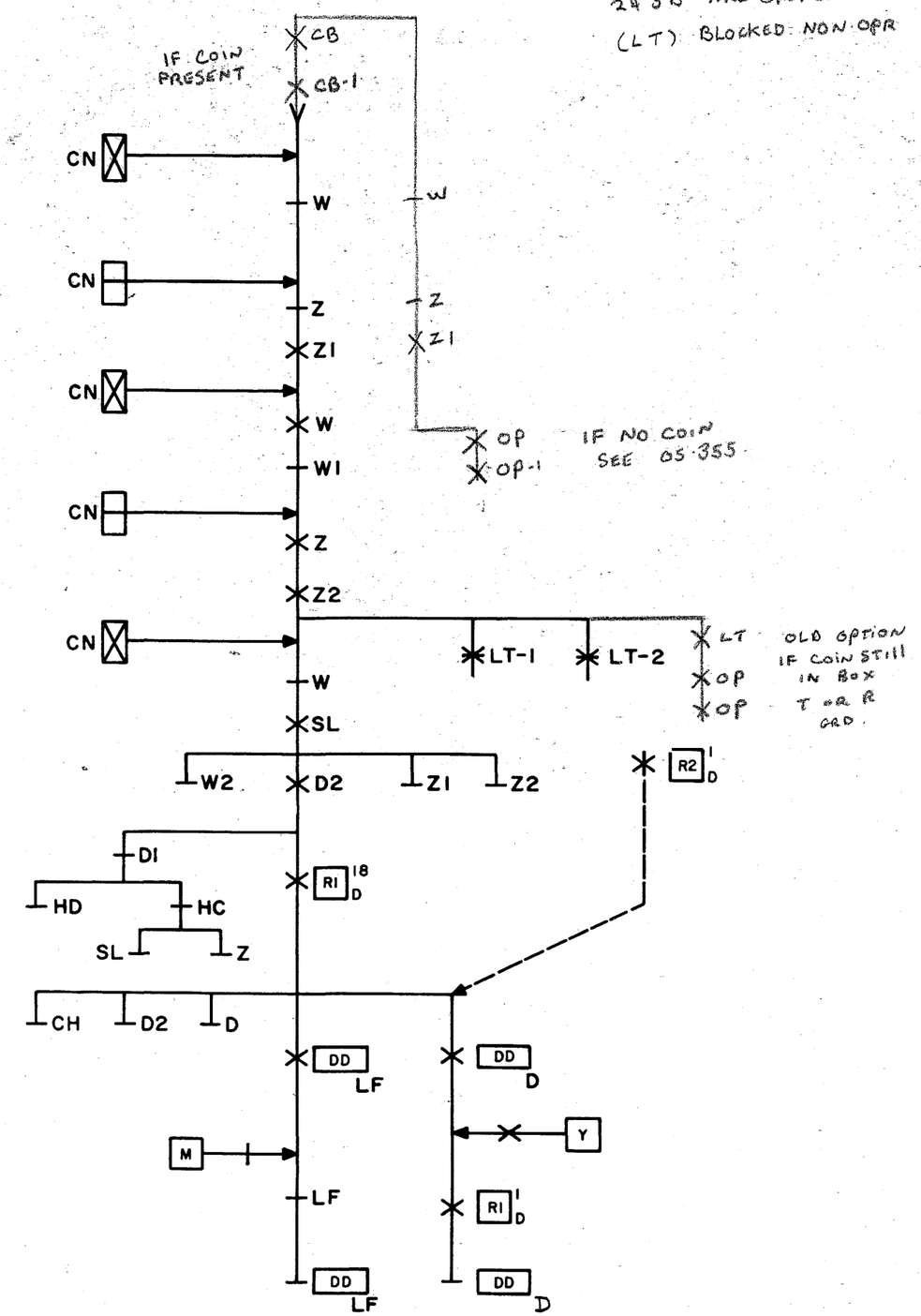

PLANT SCHOOL FOR TRAINING PURPOSES ONLY
40 COIN DISTRICT RETURN TO NORMAL
PANEL SYSTEM BATTERY-CUT-OFF 05-354 SHEET 1 OF 2

ISSUE 1 JAN. 1950

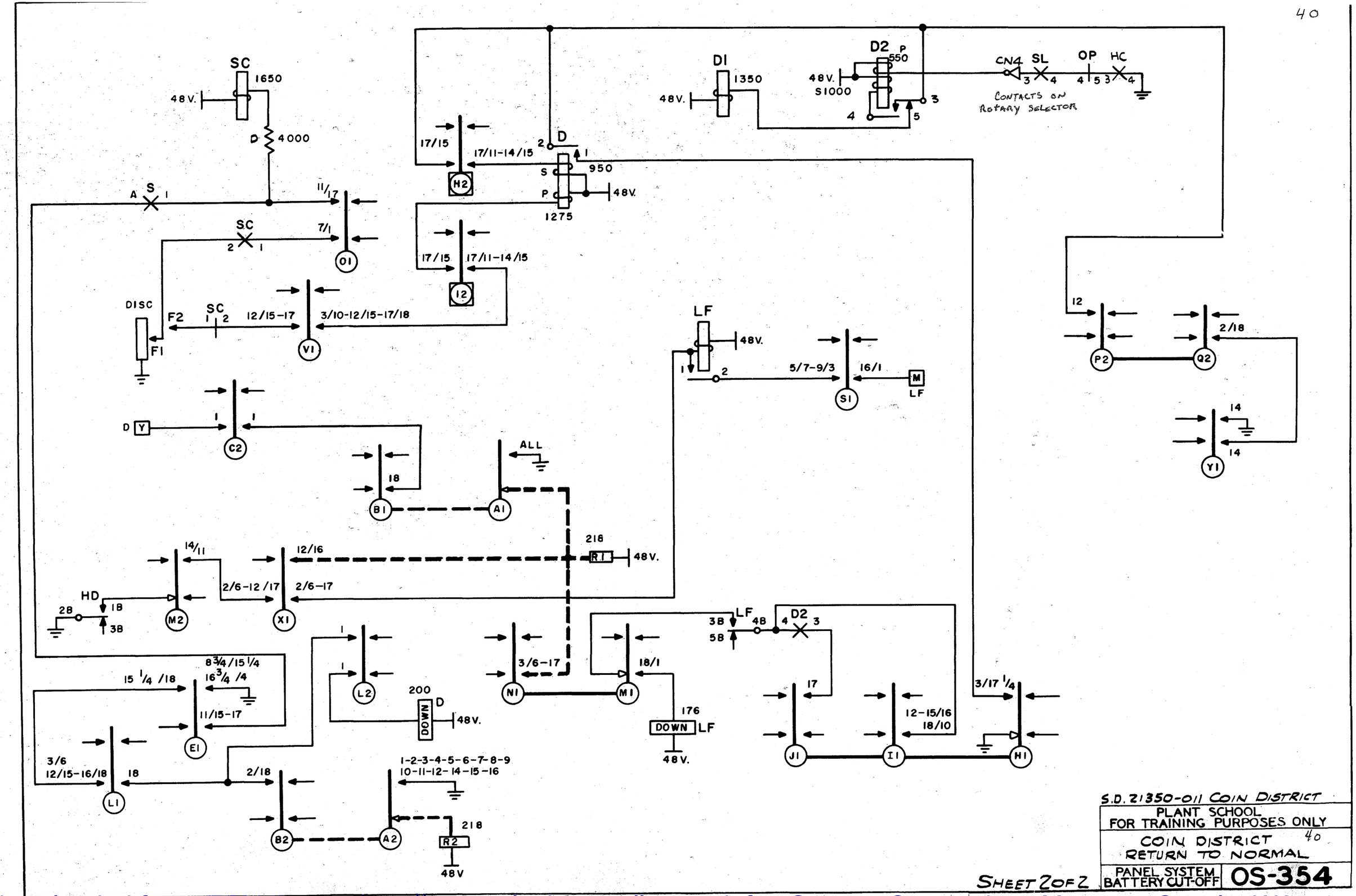

41

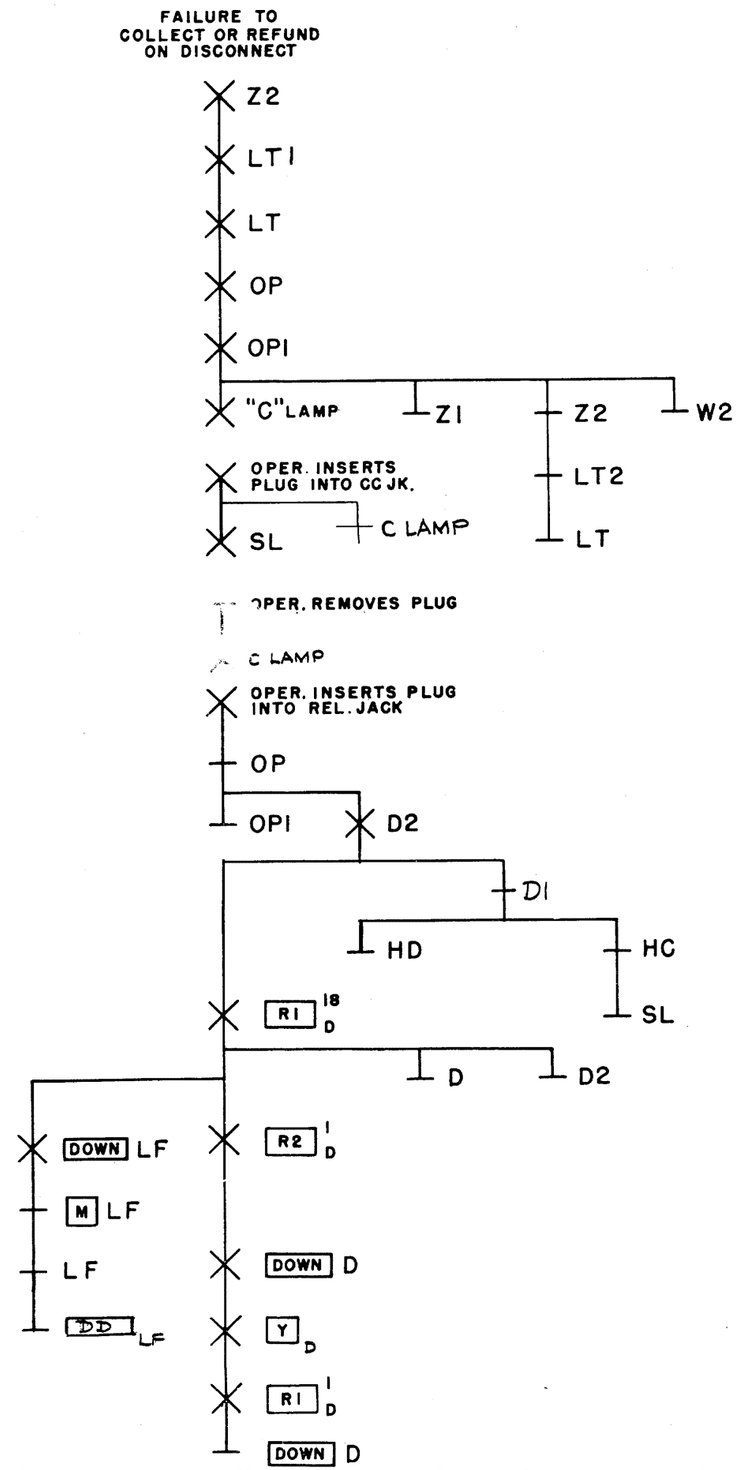

PLANT SCHOOL FOR TRAINING PURPOSES ONLY
LINE TEST TALKING TO OPERATOR
PANEL SWITCH BATTERY-CUT-OFF 05-355 SHEET 1 OF 2

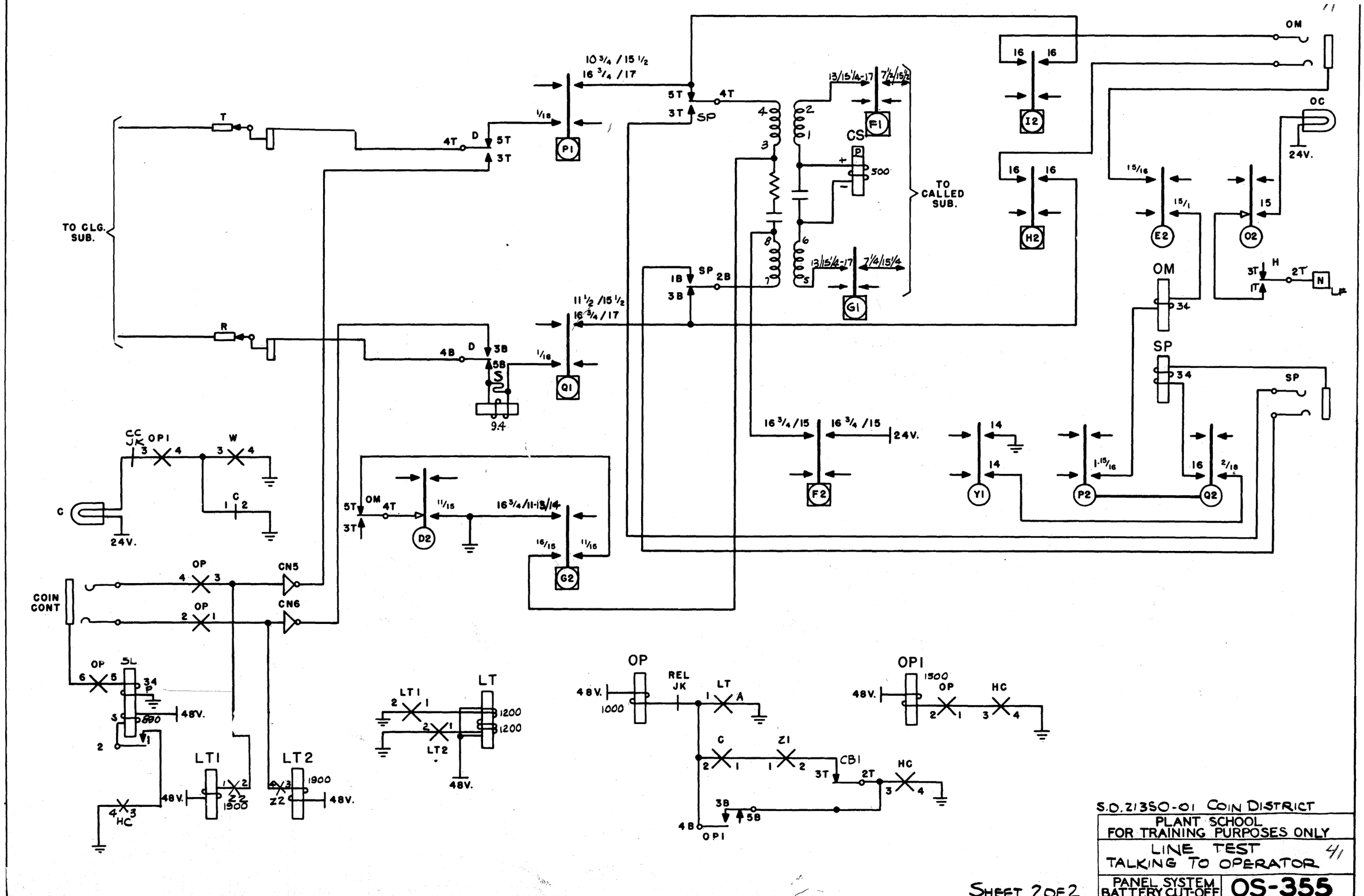

SD-96479-01 AUX SDR
SD-96483-01 AUX SDR LINK

HEAVY NEGATIVE & LIGHT POSITIVE

48 B

REG. RELAY CIRCUIT

NOTES

1. #2 & #3 Springs make 1/4 before & after Pos. indicated. 2+3 (Y) 3 (P)
2. #3 Spring makes 1/2 before & after Pos. indicated. 3 (F)
3. #2 Spring makes 1/2 after Pos. indicated. 2 (S)
4. FP & FP1 releases when R3 leaves Pos. 10 on 2nd rev.
5. SP operates from C1 relay.
6. LR & LR1 operates abandoned calls.
7. + & + sent over tip, − & − sent over ring.
8. (J) Furnishes − 2nd period (L) Furnishes − 2nd & 4th period.
   (K) Furnishes − 4th period (M) Furnishes + 1st period (N) Furnishes + 3rd period
9. + Pulses are never sent in both 1st & 3rd periods.
10. − Pulses are sent in both 2nd & 4th period regardless of req. relays.
    − is superimposed in 2nd & 4th period by Req. relays.

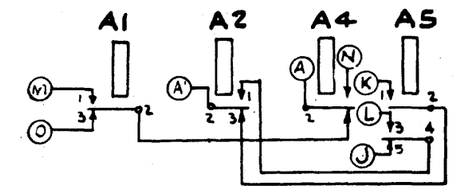

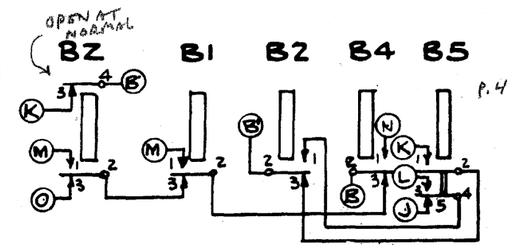

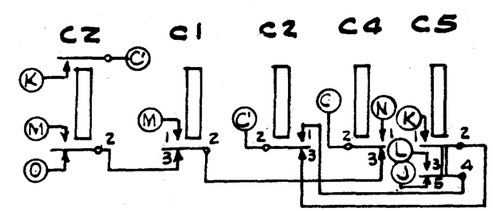

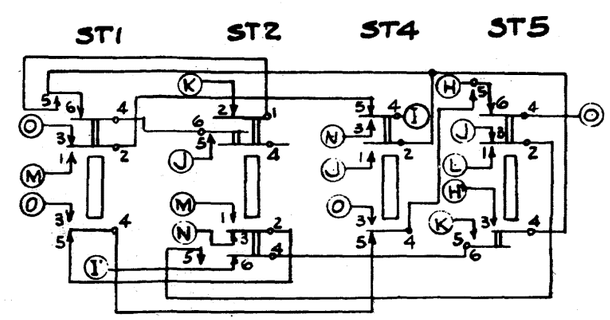

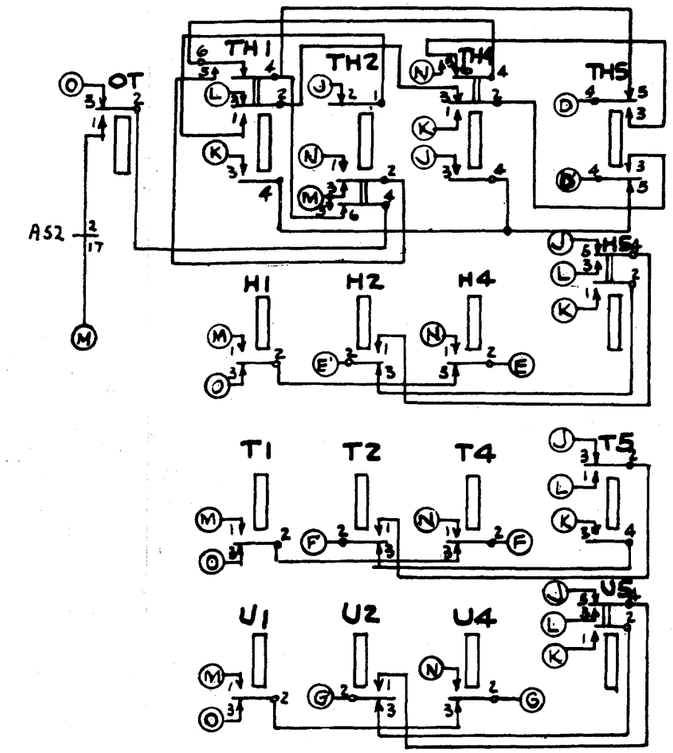

R_3 Switch

Pos			
17	PC1 DIR	STA-TH-H-T-U-FP	
5	TAN PC1	A-B-C-STA-TH-H-T-U-FP	
5	7 DG AUX	A-B-C-TH-H-T-U-STA	
5	10 DG AUX	X-O-X-A-B-C-TH-H (T+U AUX SDR)	

(AS)° (AS-1)° (AS-2)° (OT)° = SEND DIGITS IN ORDER DIALED

IF NO DIGITS DIALED INTO STATIONS A 0 IS SENT

PULSE CHART

Pulse Code Chart for 3 digit senders						
Sta.	Thou	Others	Pulses 1st	2nd	3rd	4th
0	0	0		—		—
1	2	1	+	—		—
W	4	2		—		—
R	6	3	+	—		—
J	8	4		—	+	—
M	1	5		—		—
	3	6	+	—		—
	5	7		—		—
	7	8	+	—		—
	9	9		—	+	—
1st CYCLE	STA		16 3/4 / 17 1/4	17 1/2 / 18 1/2	18 3/4 / 19 1/4	19 1/2 / 20 1/2
2nd "	TH		20 3/4 / 11 1/4	11 1/2 / 12 1/2	23 3/4 / 3 1/4	3 1/2 / 4 1/2
3rd "	A	H	4 3/4 / 5 1/4	5 1/2 / 6 1/2	6 3/4 / 7 1/4	7 1/2 / 8 1/2
4th "	B	T	8 3/4 / 9 1/4	9 1/2 / 10 1/2	10 3/4 / 11 1/4	11 1/2 / 12 1/2
5th "	C	U	12 3/4 / 13 1/4	13 1/2 / 14 1/2	14 3/4 / 15 1/4	15 1/2 / 16 1/2
Final Heavy + pulse			17 3/4 / 18 1/4 (2nd Rev.)			

(FP) REC 18 1/4 2ND REV
(TAN) ROTATIONS 17 1ST REV

R_3 SW ROTATIONS

(OT)° 7 DG AUX SDR 1ST	2ND	(OT)° 10 DG AUX SDR 1ST	2ND	(OT)° TAN PC1 1ST	2ND
	TH		A		STA
	H		B		TH
A	T	X	C	A	H
B	U	O	TH	B	T
C	STA	X	H	C	U
		TENS & UNITS INTO AUX SDR			FD

10 DG CALL	X	O	X	A	B	C	TH	H	TU
REGISTER	A	B	C	TH	H	T	U	STA	1ST AUX

CD-21193.01 PAR 103.17

PAR. 65-73

S.D. 21193-011-012-013 SENDER

PLANT SCHOOL
FOR TRAINING PURPOSES ONLY

PC1 IMPULSE 48 B

PANEL SYSTEM BATTERY CUT-OFF

OS-32

SHEET 2 OF 4

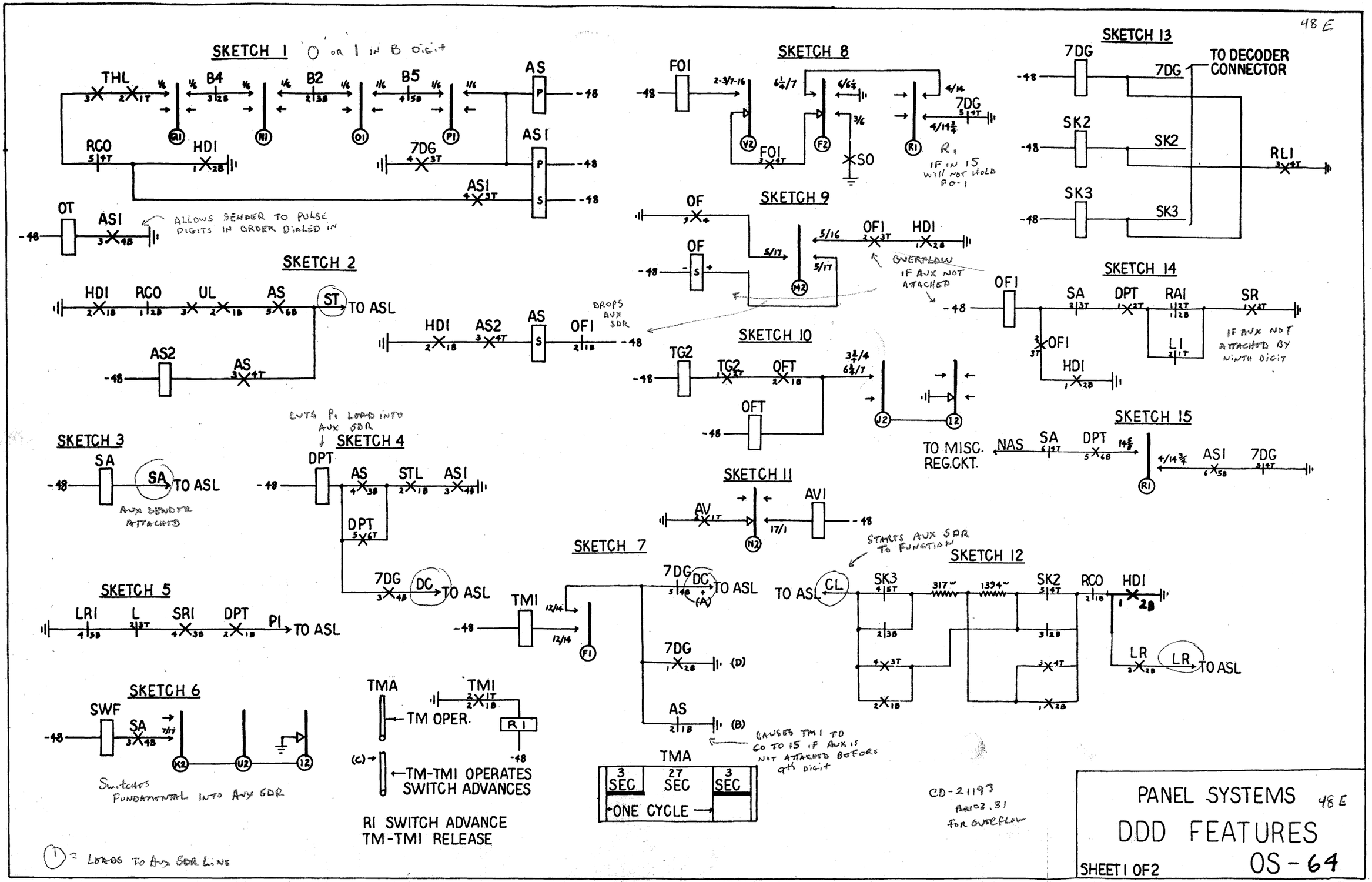

PANEL SYSTEMS 48 E

DDD FEATURES

SHEET 1 OF 2

OS-64

SKETCH 16

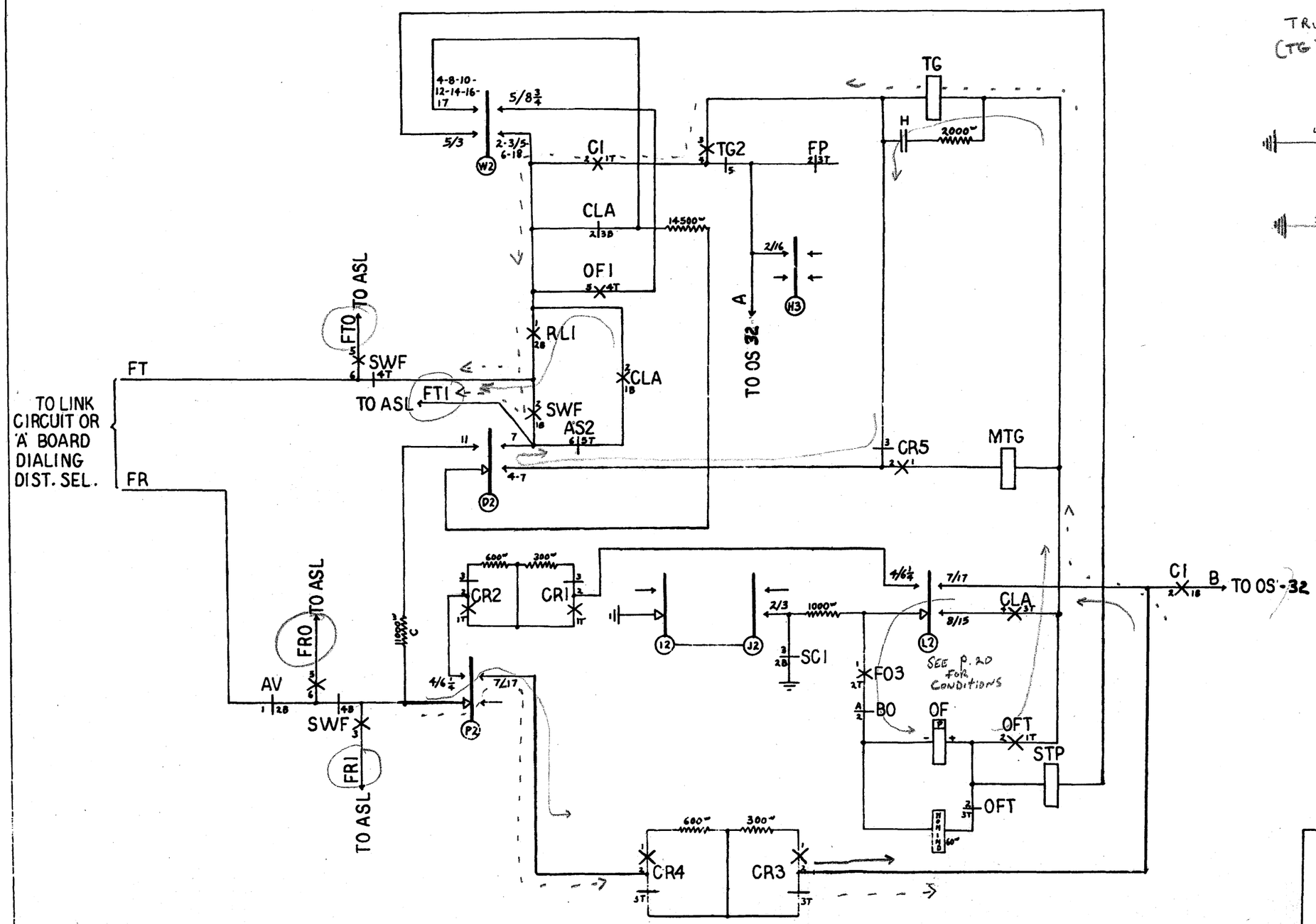

TRUNK TEST PATH →
(TG) HOLDING PATH - - - →

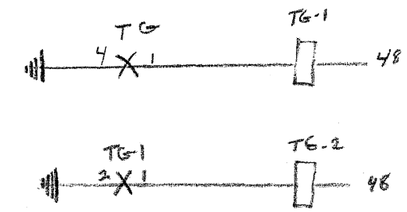

PANEL SYSTEMS 48 D

DDD FEATURES

SHEET 2 OF 2

OS-64

48F

OS 64, SKETCH 1

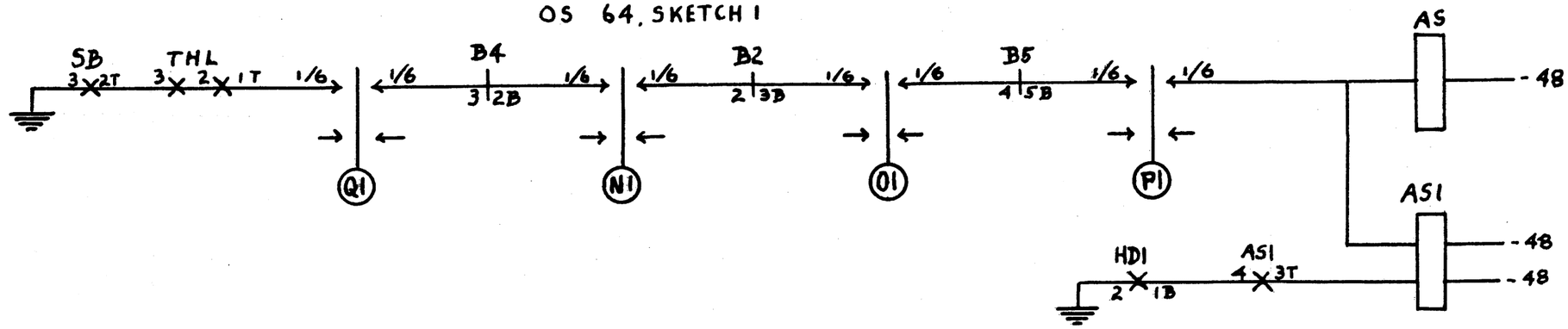

OS 64, SKETCH 2

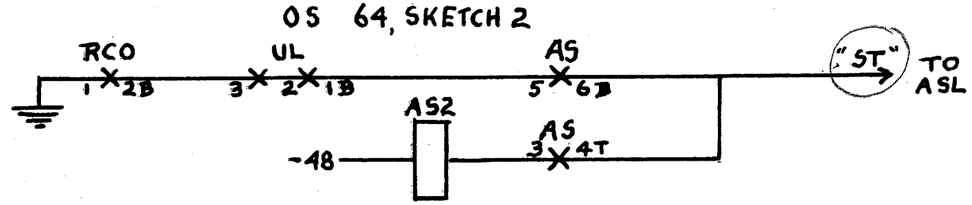

OS 64, SKETCH 12

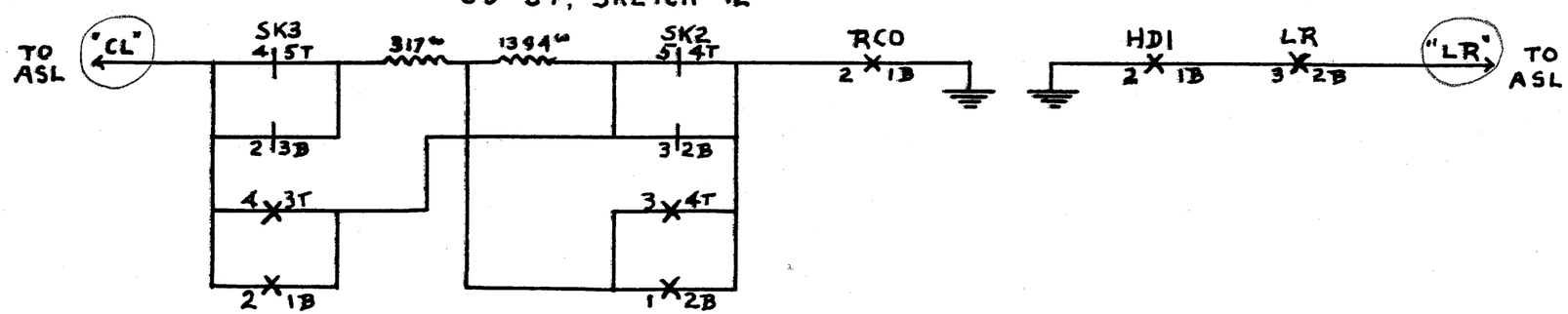

OS 32 SHEET 3

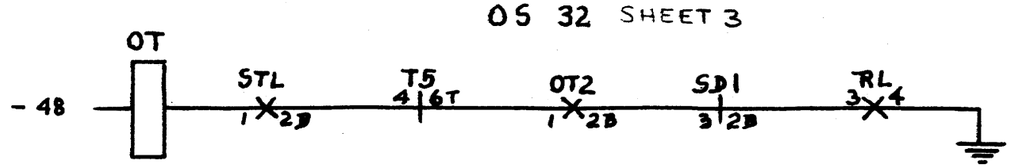

○ = LEADS TO ANX SOR LINK

ISSUE	1	R.P.S.
DATE	7/58	

Subs. Sdr., SD 21193-01
DDD Modifications using
RCO relay per Fig. BV. 48F
Panel System,
Battery Cut-off OS 64-A

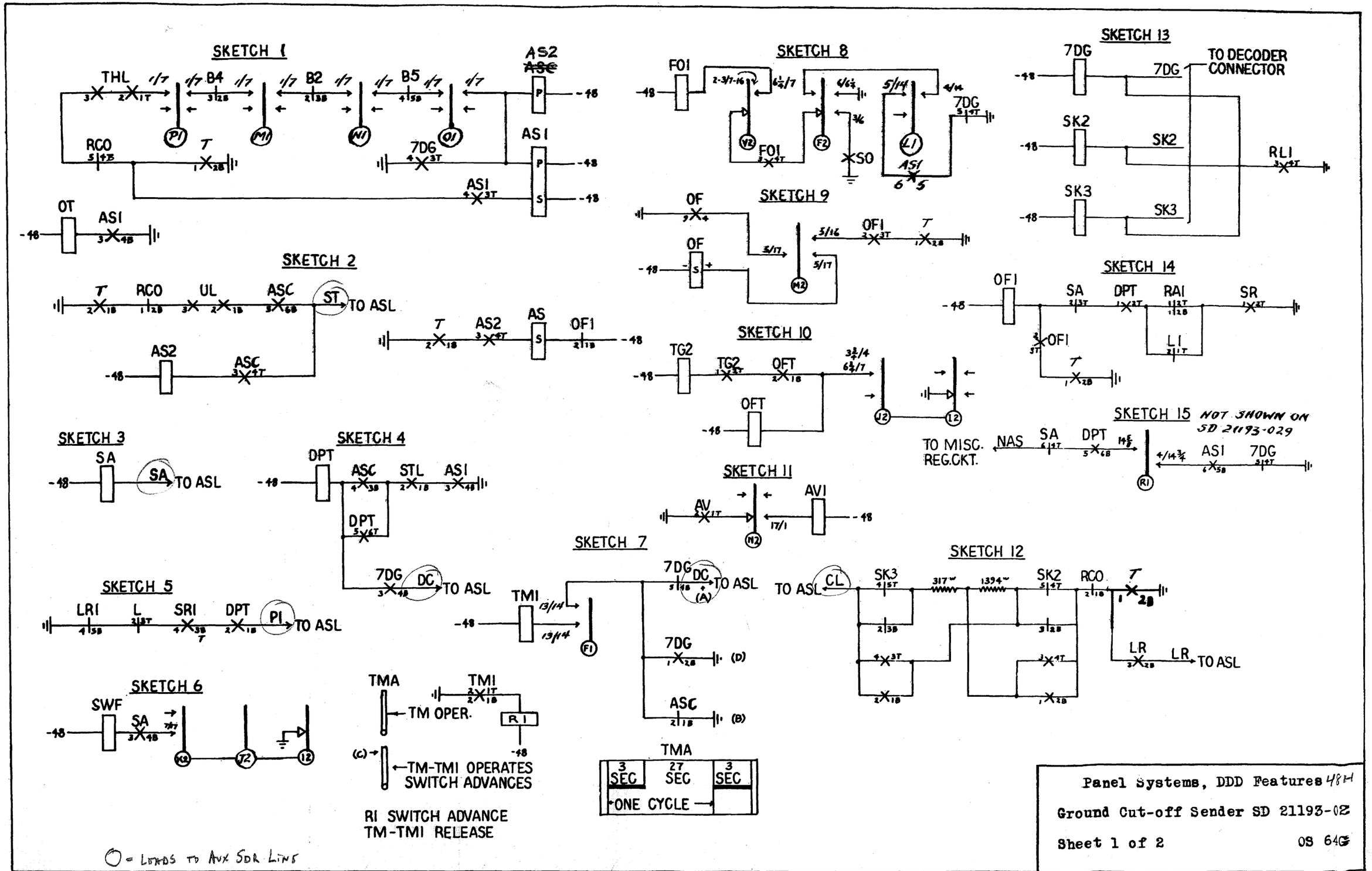

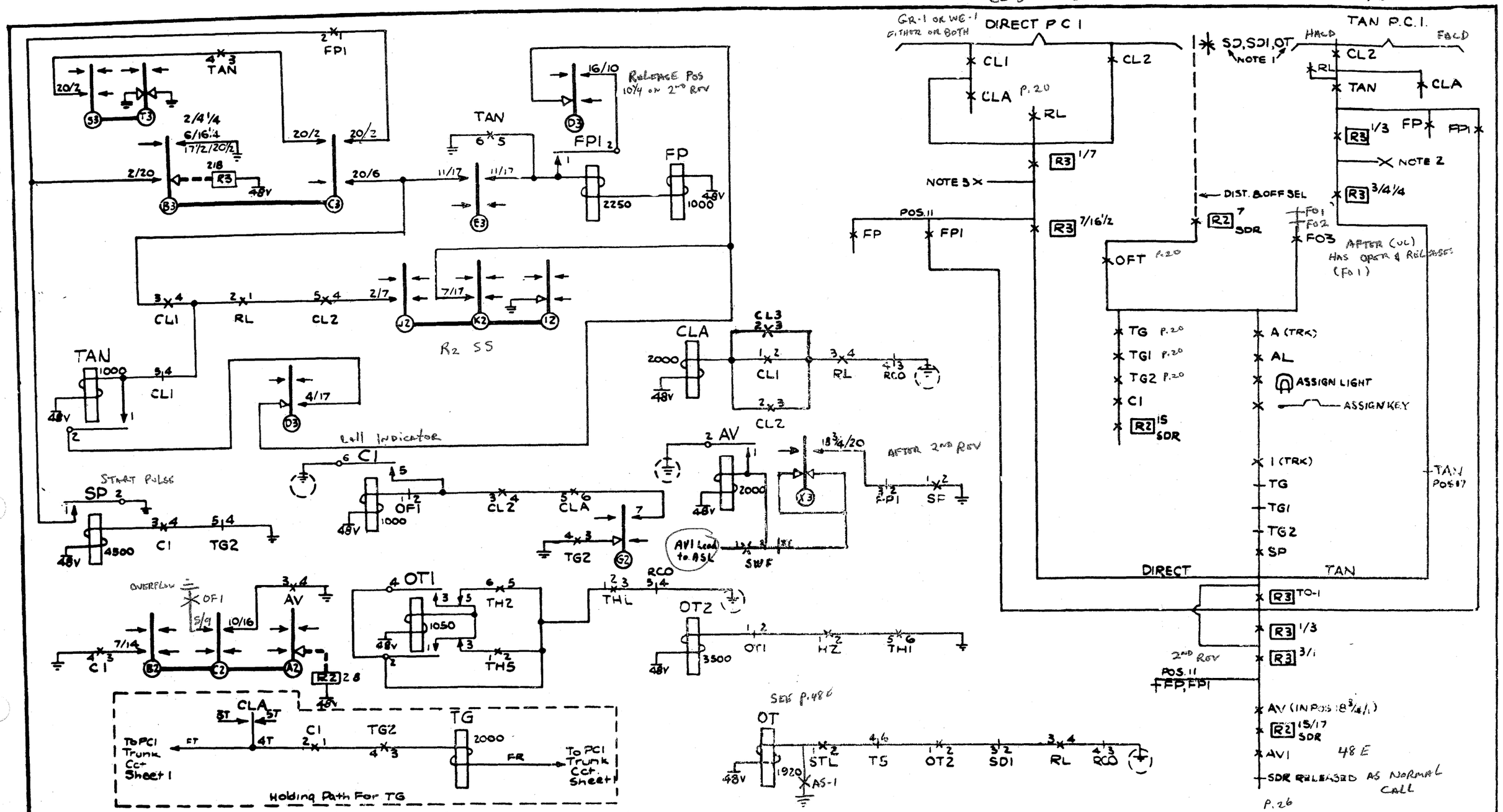

(TG) WILL NOT OP UNTIL (FO-1) RELEASES IN POS-7
HOLDS UNTIL (UL) IS REGISTERED, (THT) NON-OP
ON ANY CALL USING (CLA), (FO-1) WILL ALSO HOLD
TO (G)3 TO ASSURE R3 IN PROPER POSITION.

P.20

(O) = LEAD TO AUX SDR LINK

NOTES

1

OT - POSSIBLE {STA DELAY}	A	ABOVE AND PARTYS - NONE
	B	ABOVE AND NO PARTYS - SD
OT - IMPOSSIBLE {STA DELAY}	C	BELOW AND NO PARTYS - SD, SDI
	D	BELOW AND PARTYS - SDI

-7 DG & DIR
-10 DG & TAN

2. 83 CAM ADVANCES SW FROM 3 TO 4 1/4 ON TAN

5. 83 CAM ADVANCES SW FROM 6 TO 16 1/4 ON DIRECT

PLANT SCHOOL
FOR TRAINING PURPOSES ONLY

P.C.I. IMPULSES 48C

SHEET 3 OF 3

PANEL SYSTEM BATTERY CUT-OFF

OS-32

41

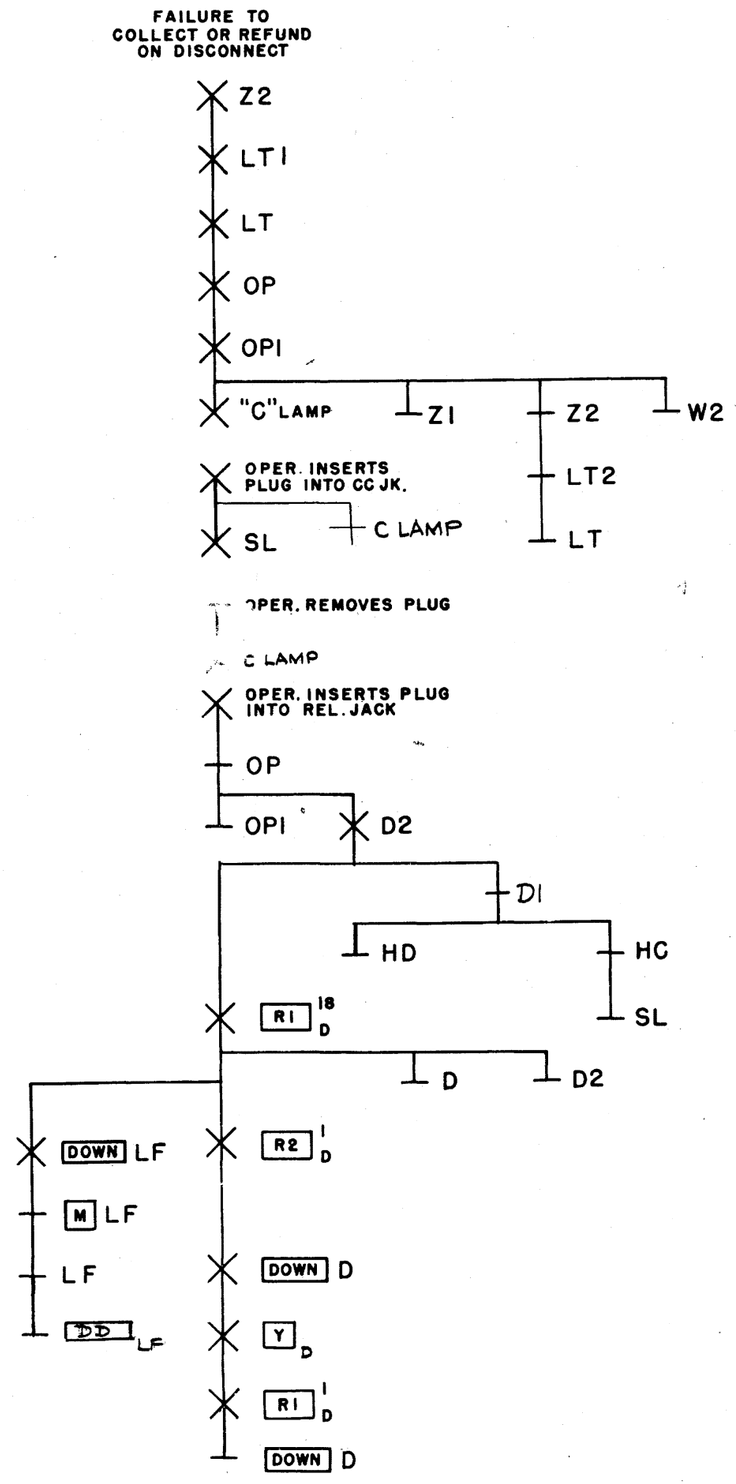

PLANT SCHOOL FOR TRAINING PURPOSES ONLY	
LINE TEST TALKING TO OPERATOR	
PANEL SYSTEM BATTERY	OS 3565 SHEET 1 OF 2

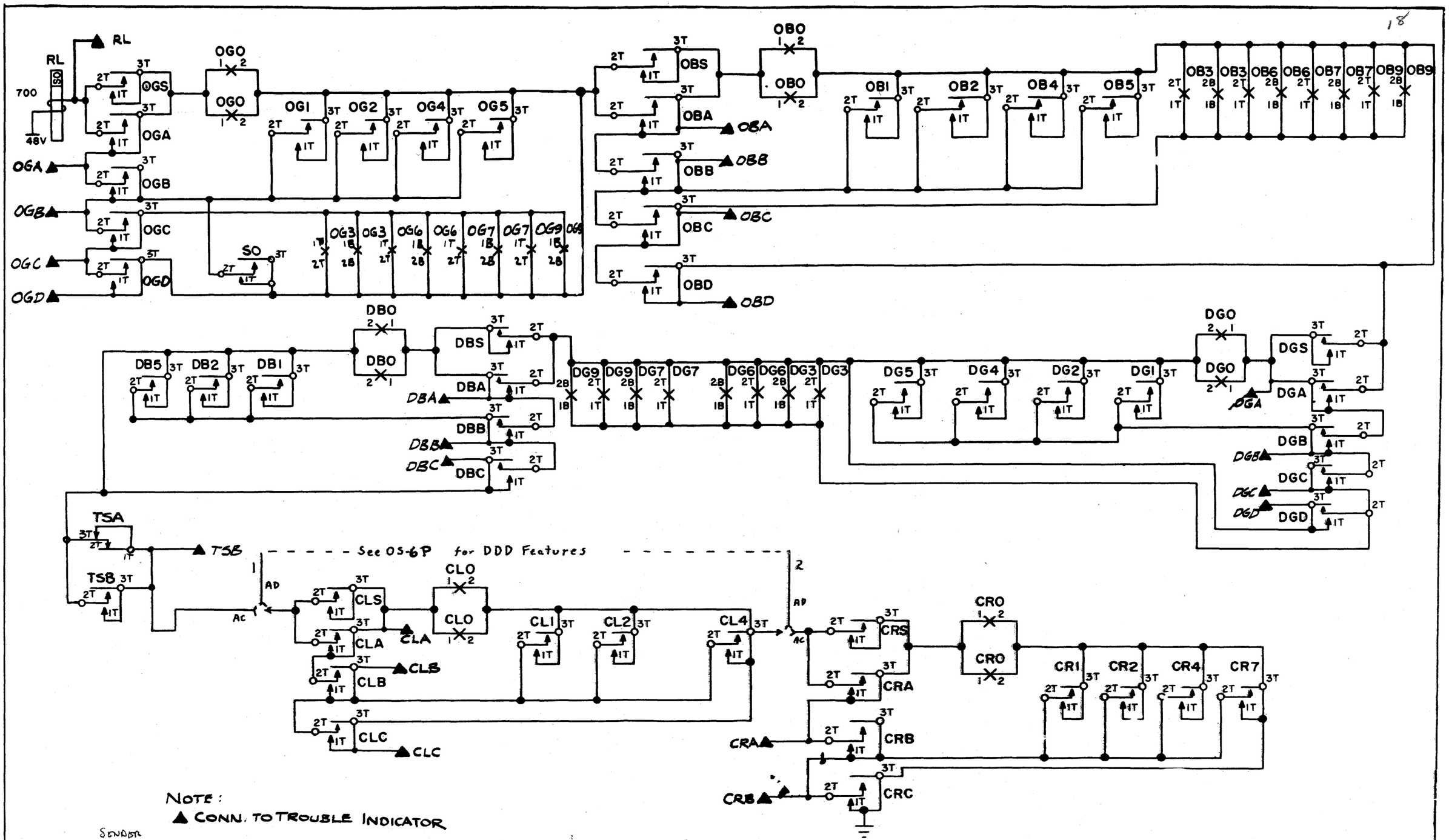

BALANCED CIRCUIT
OPTION J
LONG LOOP
N5 TYPE POSITIVE SHUNTING OF (STP)
ALL INC & FINAL SELECTIONS

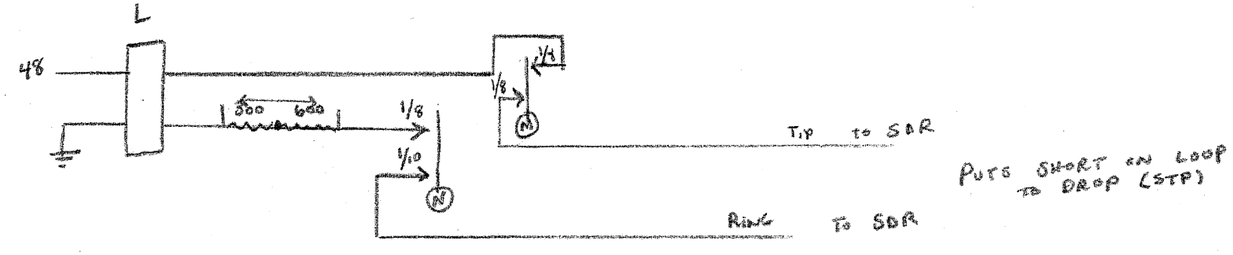

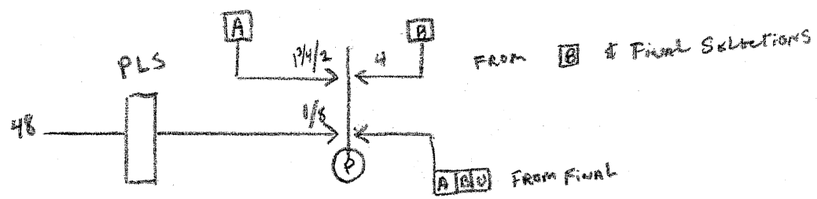

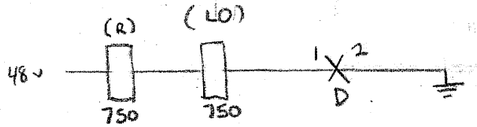

(LO) OPR
(R) FAILS TO OPR
32 MA

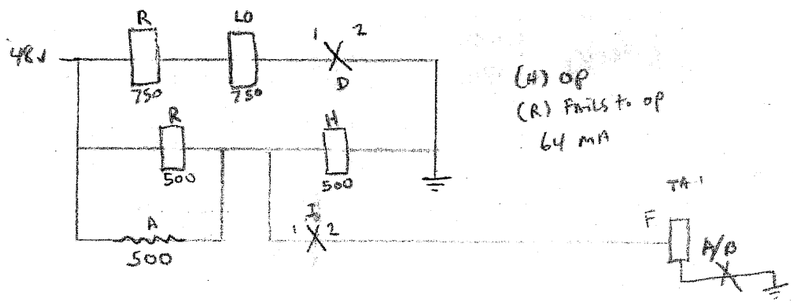

(H) OP
(R) FAILS TO OP
64 MA

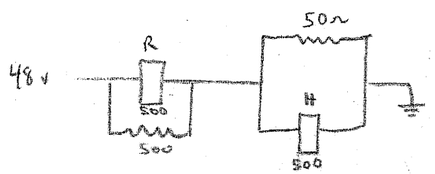

AFTER (H) OPR'S
(R) WILL OPR
ABOUT 144 MA

"GA" LOOPS THRU
ANY SWITCHES UNTIL
ONE IS FOUND IN POS 1

1 & 4 OF (P)
MADE ALWAYS

2 & 3 OF (P)
MADE 2/9
11/18

GA/GB LOAD SIMILAR
EXCEPT P & N CAMS USED
SEE

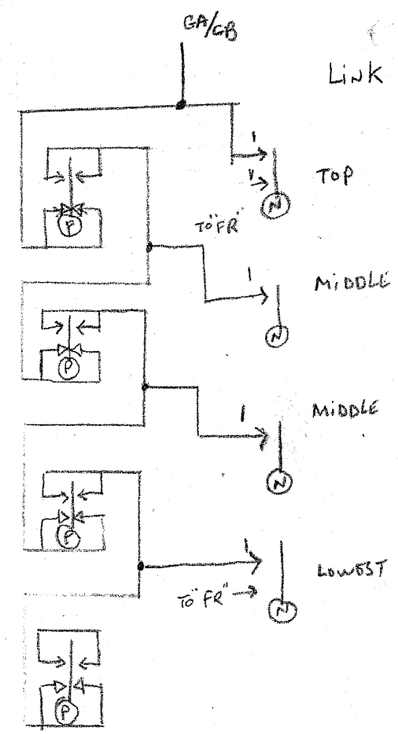

STA/STB

STA LOAD LOOPS
THRU ANY SS NOT
IN POS 1 'TIL A
LINK SW IN POS 1
IS FOUND.

ONLY 1 LINK POS
#1

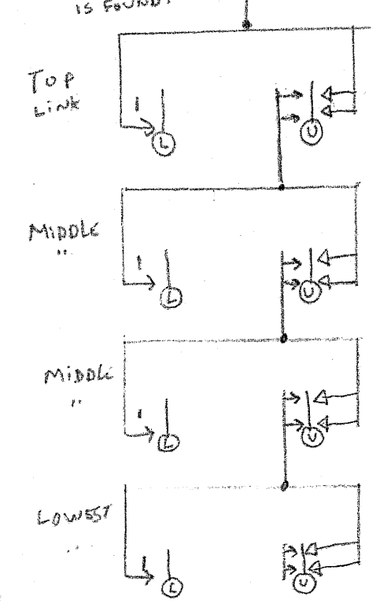

3 & 4 (U) MADE
ALWAYS

1 & 2 (U) NOT MADE
POS 1

APPENDIX A

BASIC CIRCUITS

THE SCHEMATIC CONVENTIONS FOR "FUNDAMENTAL CIRCUITS" ARE TAKEN FROM B.S.P. SECTION A 804.002

1 CONTACTS

(A) REGULAR CONTACTS FOR RELAYS ETC.

(B) ARMATURE FOR RELAYS ETC.

CIRCLE INDICATES PIVOT POINT.

(C) NORMALLY CLOSED CONTACTS.

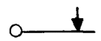

(D) NORMALLY OPEN CONTACTS.

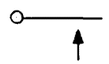

2. CORE

CORE FOR RELAYS, MAGNETS, ETC.

3. INDUCTANCE

REPEATING COIL OR INDUCTION COIL WINDING.

4. WINDING

(A) INDUCTIVE WINDING FOR RELAYS ELECTROMAGNETS, ETC.

(B) NONINDUCTIVE WINDING

(C) INNER END FOR WINDING.

5 LINE CONVENTIONS

(A) JUMPER

(B) LEADS FOR SHOWING DETAILS OF ONE CIRCUIT ON ANOTHER CIRCUIT.

(C) TALKING

(D) FUNDAMENTAL CIRCUIT

(E) SEQUENCE SW ROTARY MAGNET LEAD

(F) SIGNALLING CONTROL

(G) HIGHWAY CONNECTION

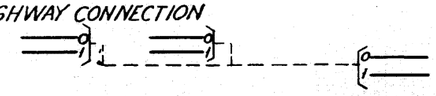

6. METHOD OF SHOWING LEADS

(A) CROSSED WIRES (NO METALLIC CONNECTION)

(B) JOINED WIRES (CONNECTION BETWEEN WIRES)

7. BATTERIES

(A) 48 VOLT BATTERY (POSITIVE SIDE GROUNDED)

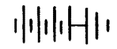

(B) 24 VOLT BATTERY (POSITIVE SIDE GROUNDED)

8. CAPACITOR

FIXED CAPACITOR

CIRCULAR PLATES USUALLY GO TO LOW VOLTAGE SIDE.

9. CLUTCH MAGNETS

10. DIAL (SIMPLE SYMBOL)

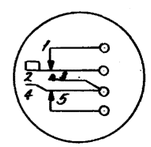

11. COMMUTATOR, COMMUTATOR SPRING, MULTIPLE BRUSH SPRING, MULT. BANK TERM.

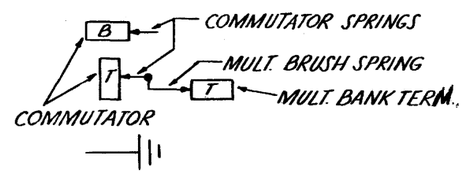

12. GROUND

13. INDUCTORS

(A) INDUCTION COIL

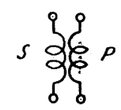

(B) REPEATING COIL

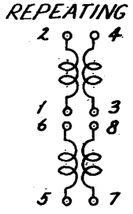

14 HAND-TYPE RECEIVER

15 RELAYS

(A) RELAY WITH NON-INDUCTIVE WINDING

(B) RELAY SHOWING SPECIFIC OPERATING FEATURE

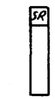

"SR" DENOTES "SLOW RELEASE"

16. RESISTOR

SIMPLE SYMBOL

17 ROTARY-TYPE SELECTOR

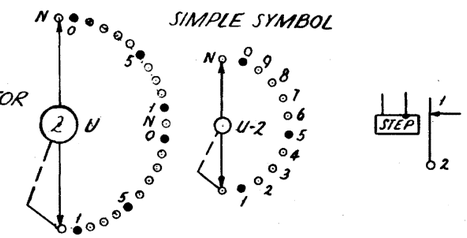

18. SEQUENCE SWITCH

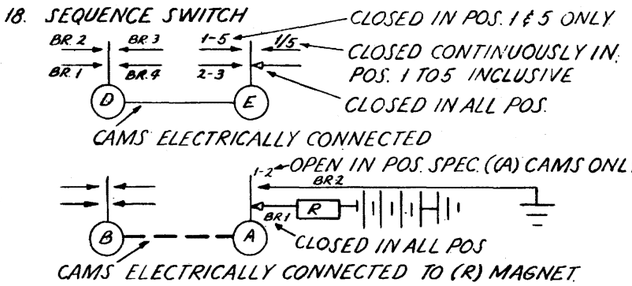

19. SWITCH-HOOK

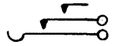

20. TERMINAL

(A) APPARATUS

(B) TERMINAL PUNCHING

21 TONE ALTERNATOR

22. TRANSMITTER

SCHEMATIC CONVENTIONS FUNDAMENTAL CIRCUITS

FUNDAMENTALS | RM 000.001

R.M. 000.001

ISSUE	1	2
DATE	2-11-55	4-6-55
BY	N.A.S.	L.E.B.

THE WINDING AND SPRING DESIGNATION USED IN THE "FUNDAMENAL CIRCUITS" ARE TAKEN FROM BELL SYSTEM PRACTICE SECTION A 804.007 SECTION A 448.002

1 A CONTACT SPRING IS DESIGNATED THE SAME, WHETHER THE APPARATUS IS VIEW FROM THE CONTACT SIDE, OR THE TERMINAL SIDE

2. THE UPPER AND LOWER RELAY CONTACTS AND WINDING TERMINALS OF ALL RELAYS ARE DESIGNATED "T" (TOP) AND "B" (BOTTOM) EXCEPT AS NOTED

(A) ALL ARMATURE TERMINALS THAT ARE NOT IN ALIGNMENT WITH OTHER TERMINALS ARE DESIGNATED "A"

(B) THE LETTERS "L" AND "R", INDICATE THE LEFT AND RIGHT SIDE, FACING THE FRONT OR CONTACT SIDE OF THE RELAY. FACING THE REAR OR TERMINAL SIDE OF THE RELAY AN "L" TERMINAL WILL BE ON THE RIGHT AND AN "R" TERMINAL WILL BE ON THE LEFT.

3. E TYPE RELAYS

(A) THE CONTACT SPRINGS ARE NUMBERED LEFT TO RIGHT FACING THE CONTACT SIDE OF THE RELAY AND FROM RIGHT TO LEFT FACING THE TERMINAL SIDE OF THE RELAY.

(B) WHERE A WINDING TERMINAL IS DESIGNATED BY TWO LETTERS AS "RT", "RB", "LT" OR "LB" IT IS AN INDICATION THAT CONNECTION IS TO BE MADE FROM THE FRONT OF THE RELAY AS SHOWN IN THE FIGURE BELOW

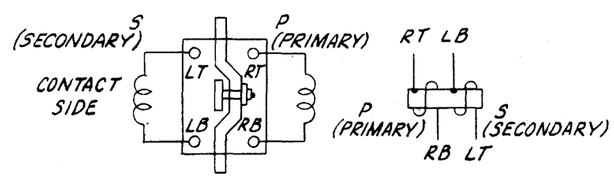

(C) WHERE A WINDING TERMINAL IS DESIGNATED BY A NUMERAL AND TWO LETTERS AS SHOWN IN THE FIGURE BELOW, IT IS AN INDICATION THAT THE CONNECTION IS TO BE MADE FROM THE REAR OR TERMINAL SIDE OF THE RELAY, THE NUMERAL IS THE SAME AS THAT OF THE CONTACT TERMINAL SIDE OF THE RELAY AND INDICATES THE POSITION OF THE WINDING TERMINAL WITH RESPECT TO THE CONTACT TERMINAL

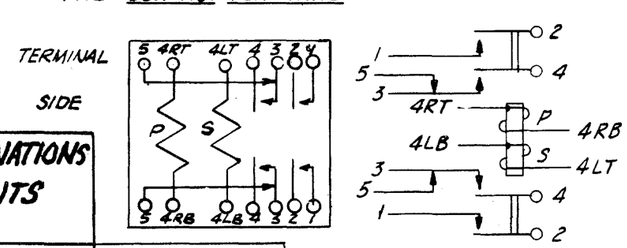

(D) THE FIRST LETTER "R" OR "L" OF THE WINDING TERMINAL DESIGNATION INDICATES ON WHICH SIDE OF THE RELAY CORE FRAME THE WINDING TERMINAL IS ASSEMBLED FACING THE CONTACT SIDE OF THE RELAY. THE LETTER "L" INDICATES LEFT AND "R" RIGHT

(E) WHEN THE NUMERAL FOLLOWS THE LETTERS, IT IS ALWAYS "1" AND INDICATES EITHER THAT THE WINDING TERMINAL IS LOCATED AT THE EXTREME RIGHT END POSITION IN A ROW OF TERMINALS LOOKING AT THE TERMINAL SIDE OF THE RELAY OR THAT IT IS LOCATED IN A ROW OF WINDING TERMINALS ONLY. SEE FIGURE BELOW

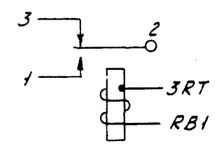

4 B TYPE RELAYS

THESE RELAYS ARE ARRANGED WITH THREE ROWS OF TERMINALS. THE WINDING TERMINALS ARE LOCATED IN THE MIDDLE ROW AND ARE NUMBERED CONSECUTIVELY FROM RIGHT TO LEFT FACING THE TERMINAL SIDE OF THE RELAY WITH A SUFFIX "M" TO INDICATE THE MIDDLE ROW OF TERMINALS. THE CONTRACT TERMINALS ARE LOCATED IN THE UPPER ROW AND ARE NUMBERED CONSECUTIVELY FROM RIGHT TO LEFT FACING THE TERMINAL SIDE OF THE RELAY AND ARE NOT GIVEN ANY LETTER DESIGNATION. THE ARMATURE TERMINAL WHICH IS ELECTRICALLY CONNECTED TO THE RELAY FRAME IS DESIGNATED "A". SEE FIGURE BELOW

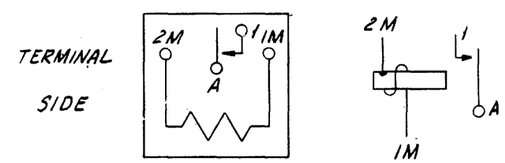

5. L TYPE RELAYS

THE WINDING AND CONTACT TERMINALS ARE NUMBERED FOLLOWING THE SCHEME FOR E TYPE RELAYS. SEE FIGURE BELOW

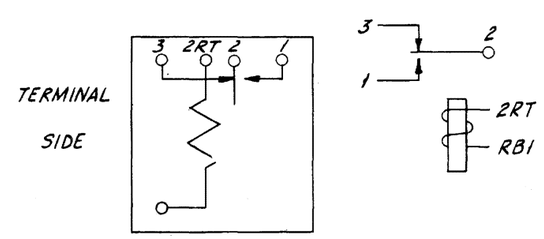

WINDING AND SPRING DESIGNATIONS
FUNDAMENTAL CIRCUITS

RM 000-002 2 SHEETS, SHEET 1 FUNDAMENTALS

ISSUE	1	2
DATE	12-31-54	4-6-55
BY	NAS	LEB

RM 000.002

6. 207 TYPE RELAYS
THE ARMATURE (FRAME TERMINAL) IS INDICATED BY "A" AND THE "FRONT CONTACT" OR "MAKE CONTACT" BY "1" SEE FIGURE BELOW.

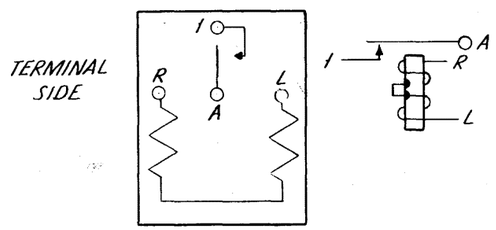

7. 149 AND 178 TYPE RELAYS
THE CONTACT TERMINALS ARE NUMBERED CONSECUTIVELY FROM RIGHT TO LEFT FACING THE TERMINAL SIDE OF THE RELAY THE RELATIVE LOCATION OF THE WINDING TERMINALS AS VIEWED FROM THE TERMINAL SIDE AS SHOWN BELOW.

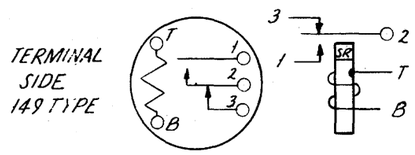

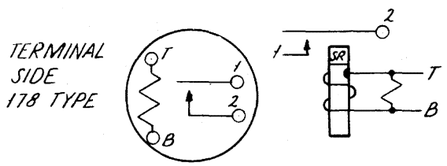

8. 208 TYPE RELAYS
THE "FRONT CONTACT" OR "MAKE CONTACT" IS INDICATED BY "1", THE ARMATURE BY "A" AND THE "BACK CONTACT" OR "BREAK CONTACT" BY "2" SEE FIGURE BELOW.

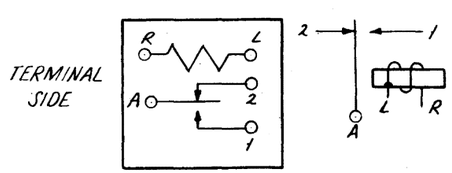

9 SEQUENCE SWITCH SPRINGS
(A) THE 4 SPRINGS OF A SEQ. SW. CAM ARE KNOWN AS LEFT OUTER, LEFT INNER, RIGHT OUTER, RIGHT INNER ACCORDING TO THEIR POSITION AS VIEWED FROM THE CAM SIDE. THE LEFT SIDE OF THE CAM IS THE SIDE NEAREST THE DRIVE OR "R" MAGNET AND THE SPRINGS ON THAT SIDE OF THE CAM ARE THE LEFT SPRINGS, THE 2 SPRINGS NEAREST THE CAM SPINDLE ARE THE INNER SPRINGS.

(B) THE SPRINGS FOR CAMS OTHER THAN THE "A" CAM ARE NUMBERED AS FOLLOWS
1 IS LEFT INNER
2 IS LEFT OUTER
3 IS RIGHT OUTER
4 IS RIGHT INNER

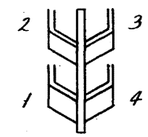

(C) THE "A" CAM HAS NO SPRINGS ON THE LEFT SIDE.
1 IS RIGHT INNER
2 IS RIGHT OUTER

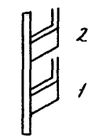

(D) THE SEQ. SW. SPRING TERMINAL NUMBERING FROM REAR OF SWITCH FOR OTHER THAN "A" CAMS.

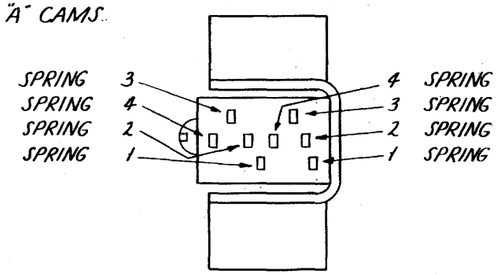

(E) THE SEQ. SW. SPRING TERMINAL NUMBERING FROM REAR FOR "A" CAMS.

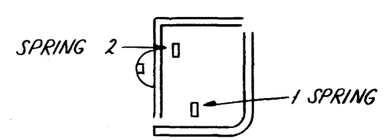

10. CLUTCH AND TRIP MAGNET TERMINAL DESIGNATIONS

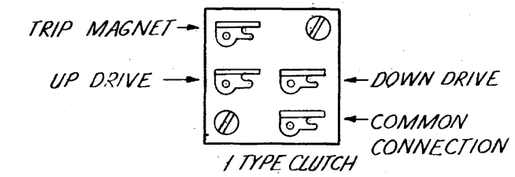

11. 200 TYPE SELECTORS
(A) FACING THE FRONT, OR ADJUSTING END, THE INTERRUPTER CONTACT SPRINGS ARE NUMBERED FROM 1 UP FROM FRONT TO REAR.
(B) FACING THE FRONT END, THE WINDING CONNECTIONS ARE NAMED, "INNER END" THE TERMINAL AT THE FRONT AND "OUTER END" THE TERMINAL AT THE REAR.

ISSUE	1	2
DATE	2-12-55	4-6-55
BY	N.A.S.	L.E.B.

RM 000.002

WINDING & SPRING DESIGNATIONS FUNDAMENTAL CIRCUITS

FUNDAMENTALS | R.M. 000.002 2 SHEETS, SHEET 2

THE SYMBOLS AND DESIGNATIONS USED IN THE SEQUENCE CHARTS FOR THE "FUNDAMENTAL CIRCUIT" ARE TAKEN FROM BELL SYSTEM PRACTICES SECTION A 128.801 AND SECTION 950 701·01 AND APPEAR BELOW

SEQUENCE CHARTS (SC)

1. RELAY OR OTHER APPARATUS OPERATIONS AND RELEASES ONLY ARE SHOWN.

2. VERTICAL PROGRESSION DOWNWARD SHOWS RELATIVE TIME PHASE OF RELAY OR OTHER APPARATUS MOVEMENTS (OPERATION OR RELEASE)

3. COORDINATES ARE USED TO LOCATE THE POSITION OF APPARATUS ON SC'S. THE HORIZONTAL COORDINATE IS ALPHABETICALLY DESIGNATED THE VERTICAL COORDINATE IS NUMERICALLY DESIGNATED STARTING WITH 101 ON SHEET 1, 201 ON SHEET 2, ETC. THUS D 304 MEANS VERTICAL COLUMN D, SHEET 3, HORIZONTAL LINE 4.

4. THE FOLLOWING TABLE SHOWS, ON A LINE BASIS, THE OPERATE AND RELEASE TIMES WHICH ARE USED FOR THE APPARATUS.

APPARATUS	OPERATE	RELEASE
(A) ALL RELAYS EXCEPT SLOW RELEASE	1 LINE	1 LINE
	EXAMPLE: LINE 101 — IMPULSER; 102 — 4 & 5 L	EXAMPLE: IMPULSER 4 & 5 L
(B) SLOW RELEASE RELAYS	1 LINE	2 LINES (MIN)
	EXAMPLE: LINE 101 — L; 102 — RA; 103	EXAMPLE: L; SR; RA — EXPLANATION: "SR" DENOTES SLOW RELEASE
(C) TIMED APPARATUS	2 LINES (MIN.)	2 LINES (MIN.)
	EXAMPLE: LINE 101 — UP; 102; 103 — A 0	EXAMPLE: DD — EXPLANATION: NO DEFINATE TIME INDICATED. BRUSH "3" RESETS

5. OPERATE SYMBOLS — EXAMPLE: RA — EXPLANATION: RA RELAY OR OTHER APPARATUS COMES TO FULLY OPERATED CONDITION.

6. RELEASE SYMBOLS — EXAMPLE: RA — EXPLANATION: RA RELAY OR OTHER APPARATUS COMES TO FULLY RELEASED CONDITION.

7. SEQUENCE CHARTS ON OPERATIONAL SKETCHES
THE DESIGNATION OF ALL APPARATUS FOR WHICH THE OPERATING PATHS ARE SHOWN ON THE OS ARE INDICATED LARGER AND HEAVIER THAN DESIGNATIONS IDENTIFYING OTHER APPARATUS SEE 9 FOR EXAMPLE

7. OTHER APPARATUS DESIGNATIONS

EXAMPLE:	EXPLANATION
DIAL 4 & 5	THE 4 & 5 CONTACTS OF THE DIAL OPEN
DIAL 4 & 5	THE 4 & 5 CONTACTS OF THE DIAL CLOSE
A 0	"A" COMMUTATOR BRUSH MAKES CONTACT WITH "0," "A" SEGMENT
A 0	"A" COMMUTATOR BRUSH BREAKS FROM 0, "A" SEGMENT.
H STEP 1	"H" ROTARY TYPE SELECTOR STEPS AND ITS BRUSHES ARE MAKING CONTACT WITH TERMINAL "1."
H STEP	"H" ROTARY TYPE SELECTOR ENERGIZED.

EXAMPLE:	EXPLANATION
R 2	SEQ. SW. MOVES TO POSITION 2.
UP	UP DRIVE ENERGIZED.
UP	UP DRIVE DE-ENERGIZED.
DOWN	DOWN DRIVE ENERGIZED.
TRIP	TRIP MAGNETS ENERGIZED.

8. CONNECTING LINES

(A) VERTICAL LINES ARE USED TO LINK CAUSES WITH EFFECTS ON SUCCEEDING LINES AS:

	EXAMPLE:	EXPLANATION
LINE 101	L	"RA" RELAY HAS OPERATED ON LINE 102 AS A RESULT OF RELAY "L" RELEASING ON LINE 101.
102	RA	

(B) HORIZONTAL AND VERTICAL LINE COMBINANATIONS ARE USED AS FOLLOWS:

EXAMPLE: — EXPLANATION: CONNECTION BETWEEN LINES.

(C) HORIZONTAL LINES ARE USED TO CONNECT MULTIPLE CAUSES PRODUCING A COMMON EFFECT OR TO CONNECT MULTIPLE EFFECTS PRODUCED BY THE SAME CAUSE AS:

	EXAMPLE:	EXPLANATION
LINE 101	L	THE UP DRIVE HAS RELEASED AND THE SEQ. SW. HAS ADVANCED TO POSITION "7" ON LINE 102 AS A RESULT OF THE "L" RELAY RELEASING ON LINE 101.
102	UP; R 7	

(D) APPARATUS FUNCTIONAL OPTIONS ARE SHOWN BY A BREAK IN THE HORIZONTAL AND VERTICAL CONNECTING LINES.

	EXAMPLE:	EXPLANATION
LINE 101	R 5; S	THE "L" AND "STP" RELAYS ON LINE 102 HAVE OPERATED AS A RESULT OF EITHER THE "S" RELAY RELEASING ON LINE 101 OR THE SEQ. SW. ADVANCING TO POSITION "5" ON LINE 101.
LINE 102	L (SEL); STP	

9. THE CIRCUIT MOST FREQUENTLY USED IN A PARTICULAR SEQUENCE CHART IS IDENTIFIED BY AN ASTERISK OPPOSITE ITS NAME IN THE LIST OF CIRCUITS ABOVE THE TITLE BLOCK. NO CIRCUITS ABREVIATIONS ARE SHOWN ON THE SEQUENCE CHART NEXT TO RELAYS ASSOCIATED WITH THIS CIRCUIT. THE CIRCUITS IN WHICH ALL OTHER RELAYS APPEAR ARE SHOWN IN BRACKETS ADJACENT TO THE RELAY DESIGNATIONS ON THE SEQUENCE CHART.

EXAMPLE:

R 7; R 8 — L (SEL)

* SENDER FUNDAMENTAL CIRCUIT
SELECTOR FUNDAMENTAL CIRCUIT

ISSUE	1	2
DATE	2-15-55	4-6-55
BY	NAS.	LEB

RM 000.003

SEQUENCE CHARTS FOR FUDAMENTAL CIRCUITS

FUNDAMENTALS — RM 000.003 — 1 SHEET, SHEET 1

THE SYMBOLS AND DESIGNATIONS USED IN THE OPERATIONAL SKETCHES FOR THE "FUNDAMENTAL CIRCUITS" ARE TAKEN FROM BELL SYSTEM PRACTICES SECTION A 128.801, SECTION 950 70101 AND SECTION A 804 002 AND APPEAR BELOW

OPERATIONAL SKETCHES (OS)
THE SYMBOLS AND COVENTIONS USED ARE THE SAME AS THOSE USED ON STANDARD CIRCUIT SCHEMATIC DRAWINGS (SD-) WITH THE FOLLOWING EXCEPTIONS.

1. A SYMBOL MAY BE TURNED IN ANY DIRECTION WITHOUT AFFECTING ITS MEANING.

SYMBOL — MEANING

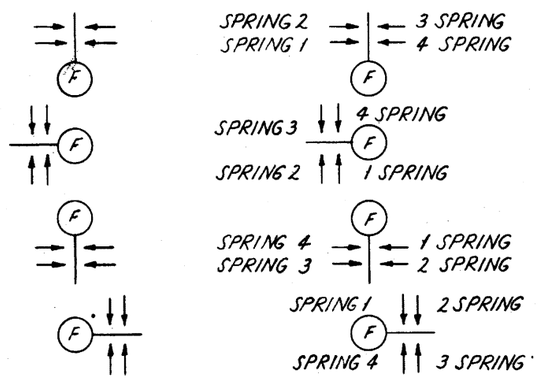

2. BATTERY (SD) SYMBOL — (OS) SYMBOL — MEANING

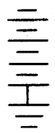

−48 — NEGATIVE SIDE OF 48 VOLT POSITIVE GROUNDED BATTERY

(SD) SYMBOL — (OS) SYMBOL — MEANING

−24 — NEGATIVE SIDE OF 24 VOLT POSITIVE GROUNDED BATTERY.

3. MAKE CONTACTS (SD) SYMBOL (L) — (OS) SYMBOL — MEANING

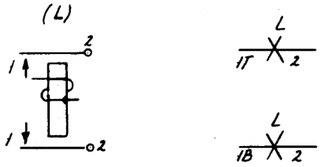

CONTACTS ARE CLOSED WHEN RELAY IS OPERATED.
CONTACTS ARE OPEN WHEN RELAY IS UNOPERATED.
RELAY HAS TOP AND BOTTOM SPRING PILE-UPS.

(SD) SYMBOL (D) — (OS) SYMBOL — MEANING

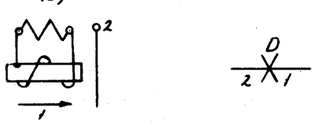

CONTACTS ARE CLOSED WHEN RELAY IS OPERATED
CONTACTS ARE OPEN WHEN RELAY IS UNOPERATED.
RELAY HAS ONLY 1 AND 2 SPRING CONTACTS.

4. BREAK CONTACTS — (SD) SYMBOL — (OS) SYMBOL — MEANING

CONTACTS ARE CLOSED WHEN RELAY IS UNOPERATED.
CONTACTS ARE OPEN WHEN RELAY IS OPERATED.
RELAY HAS TOP AND BOTTOM SPRING PILE-UPS.

(SD) SYMBOL — (OS) SYMBOL — MEANING

CONTACTS ARE CLOSED WHEN RELAY IS UNOPERATED.
CONTACTS ARE OPEN WHEN RELAY IS OPERATED.
RELAY HAS ONLY 1 AND 2 SPRING CONTACTS

5. TRANSFER CONTACTS — (SD) SYMBOL — (OS) SYMBOL — MEANING

THE SINGLE NUMBER IS SHOWN FOR THE FIXED SPRING.
NO DOT IS SHOWN AT THE JUNCTION POINT.
THE RELAY DESIGNATION IS AT THE JUNCTION POINT.

6. OTHER CONTACTS — (SD) SYMBOL (SWITCH-HOOK) — (OS) SYMBOL — MEANING

NO DOT IS SHOWN AT THE JUNCTION POINT.
THE APPARATUS DESIGNATION IS AT THE JUNCTION POINT.
THE CONTACT SEQUENCE IS COVERED IN A NOTE.

7. ROTARY TYPE SWITCH OR SELECTOR (SIMPLE SYMBOL) — (SD) SYMBOL — (OS) SYMBOL — MEANING

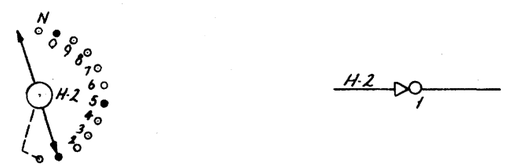

THE ARROW IS THE ROTAR BRUSH - "H" IS THE ROTARY SELECTOR - "2" IS THE ARC OF THE ROTARY SELECTOR THE CIRCLE IS THE TERMINAL AND "1" INDICATES THE TERMINAL NUMBER.

8. SEQUENCE SWITCH CAMS — (SD) SYMBOL — (OS) SYMBOL — MEANING

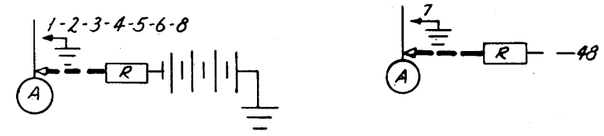

THE "A" CAM BRUSH "2" IS SHOWN IN THE "OS" SYMBOL WHEN IT MAKES WITH THE CAM TO ADVANCE THE SEQ. SW. OUT OF A PASS BY POSITION.

9. 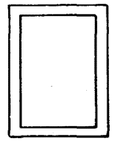 THIS INDICATES COMPLETE OR PORTION OF OTHER CIRCUIT IN ORDER TO MAKE CIRCUIT PATH COMPLETE AND TO GIVE A GENERAL UNDERSTANDING OF THE CIRCUITS.

10. RELAY WINDINGS — RELAY WINDINGS ARE NOT SHOWN.

ISSUE	1	2
DATE	2-16-55	4-6-55
BY	N.A.S.	LEB

RM 000.004

OPERATIONAL SKETCHES FUNDAMENTAL CIRCUITS

FUNDAMENTALS | RM 000.004 | 1 SHEET, SHEET 1

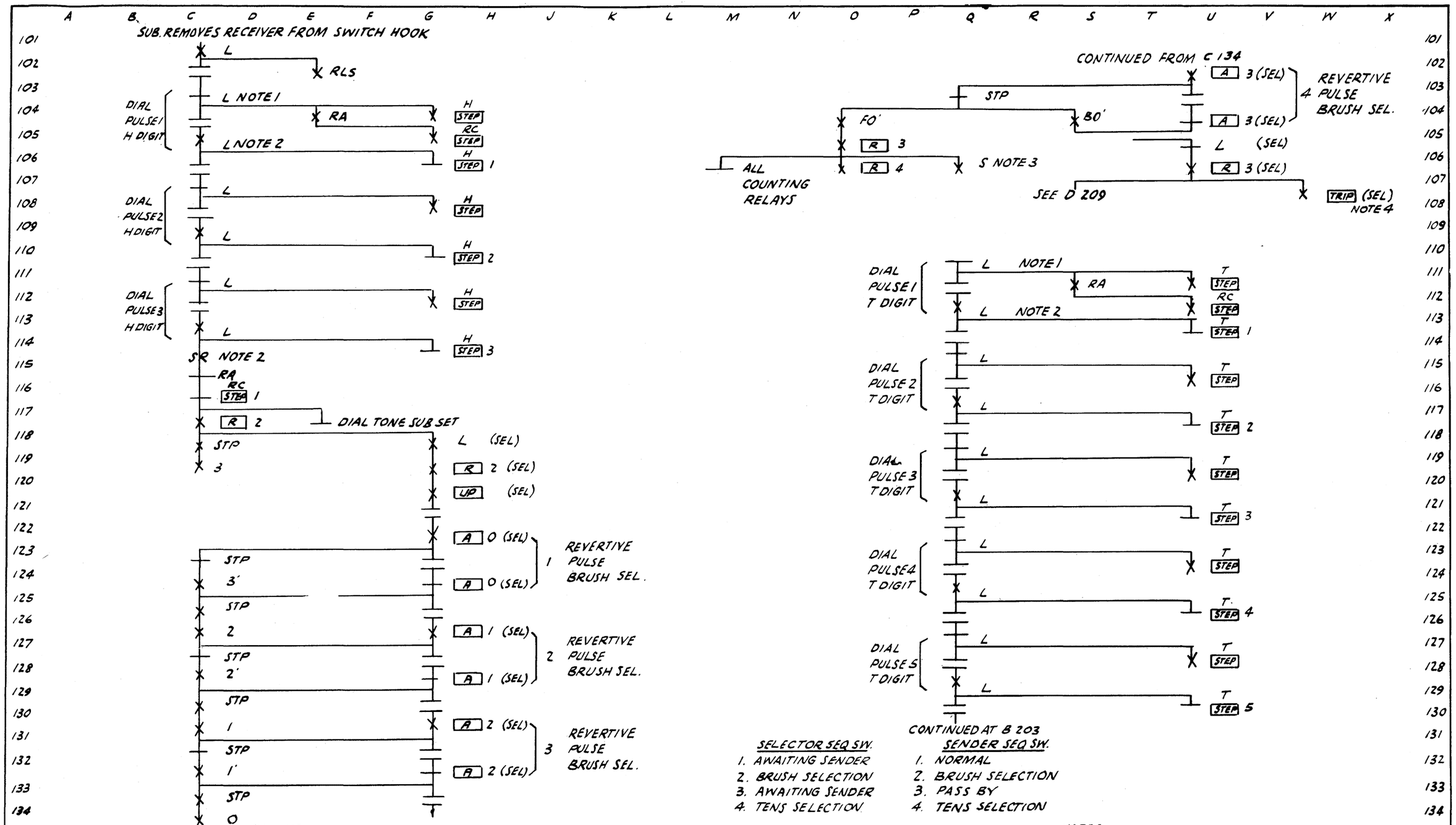

SELECTOR SEQ SW.
1. AWAITING SENDER
2. BRUSH SELECTION
3. AWAITING SENDER
4. TENS SELECTION

SENDER SEQ SW.
1. NORMAL
2. BRUSH SELECTION
3. PASS BY
4. TENS SELECTION

NOTES
1. THE "RLS" IS A SLOW RELEASE RELAY AND STAYS OPERATED DURING DIALING WHEN THE "L" RELAY IS RELEASED
2. THE "RA" IS A SLOW RELEASE RELAY AND STAYS OPERATED WHEN THE "L" REL. IS OPERATED DURING THE DIALING OF A DIGIT BUT RELEASES IN BETWEEN THE DIALING OF DIGITS

NOTES
3. THE "S" RELAY OPERATES IF THE "TENS" DIGIT IS NOT DIALED.
4. THE NO. 3 TRIP FINGER ENGAGES THE NO. 3 MULTIPLE BRUSHES TRIP LEVER.

ISSUE	1	2
DATE	2-8-55	4-7-55
BY	N.A.S.	L.E.B.

SC. 000.001

SEQUENCE CHART FOR SENDER CCT.

SC. 000.001 4 SHEETS, SHEET 1 — FUNDAMENTALS

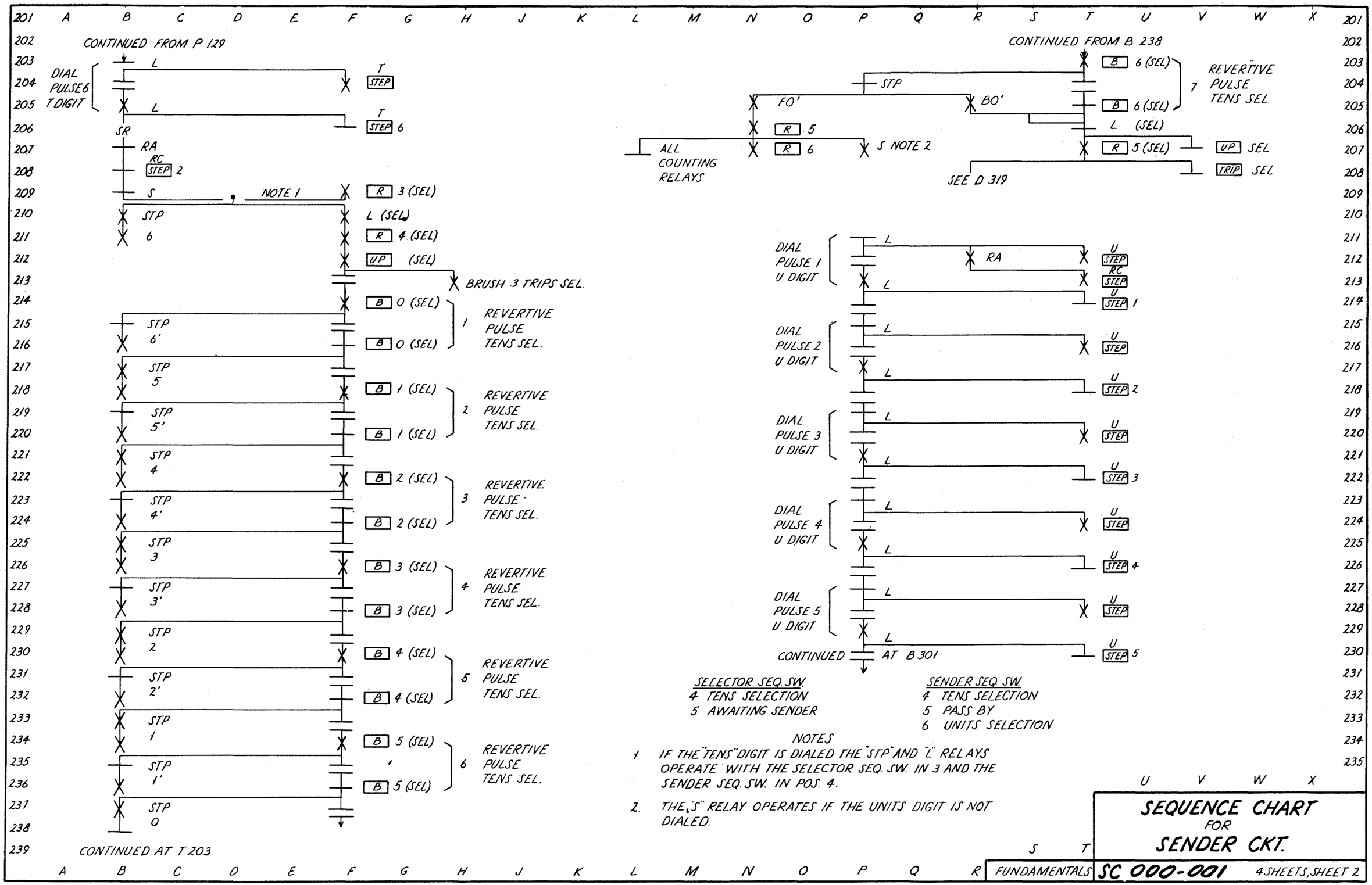

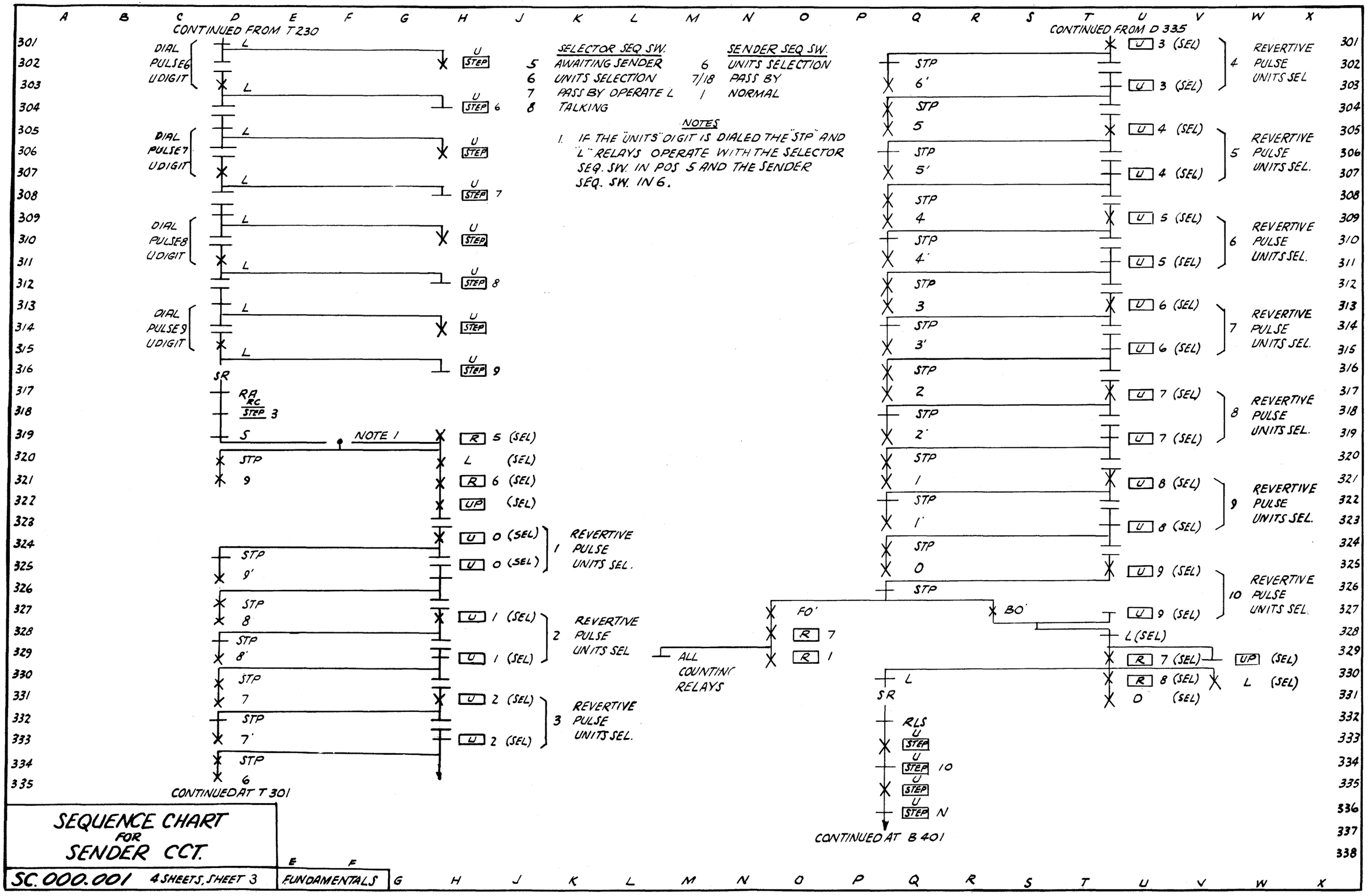

SEQUENCE CHART FOR SENDER CCT.

SC. 000.001 4 SHEETS, SHEET 3 FUNDAMENTALS

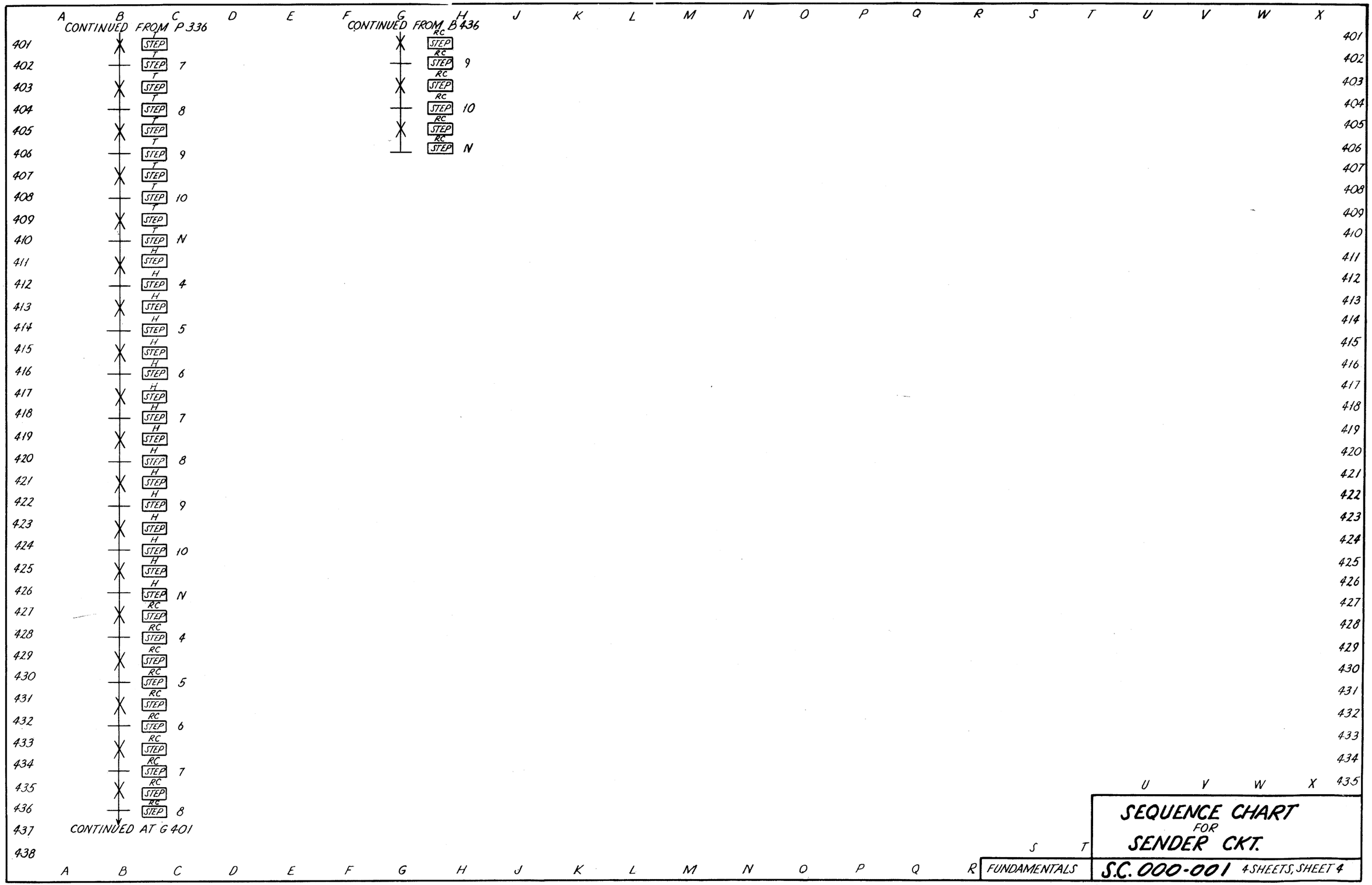

ISSUE	1	2
DATE	2-9-55	4-6-55
BY	NAS.	

S.C. 000.001

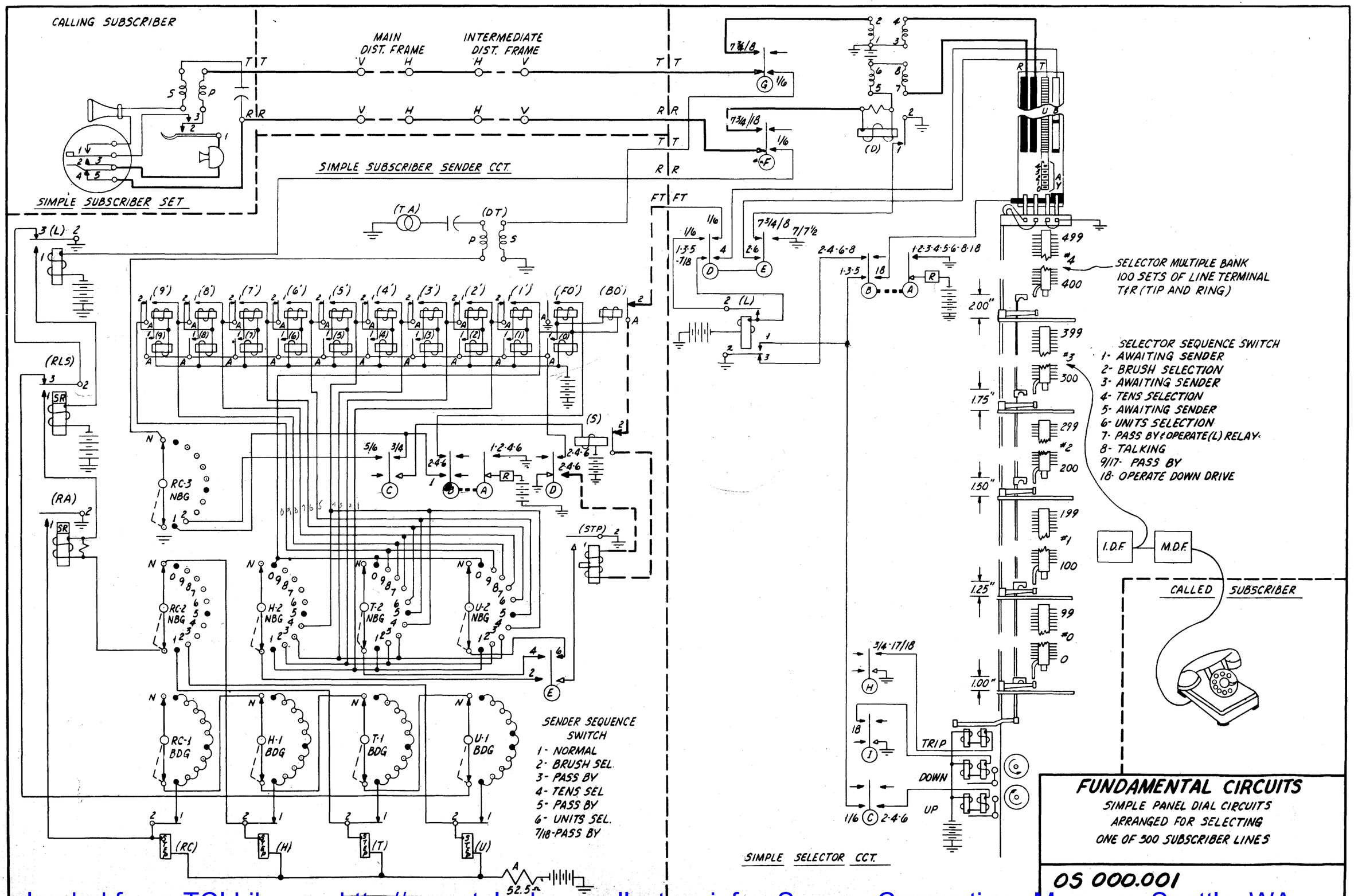

ISSUE	1	2
DATE	12-31-54	4-6-55
BY	N.A.S.	LEB

OS 000.001

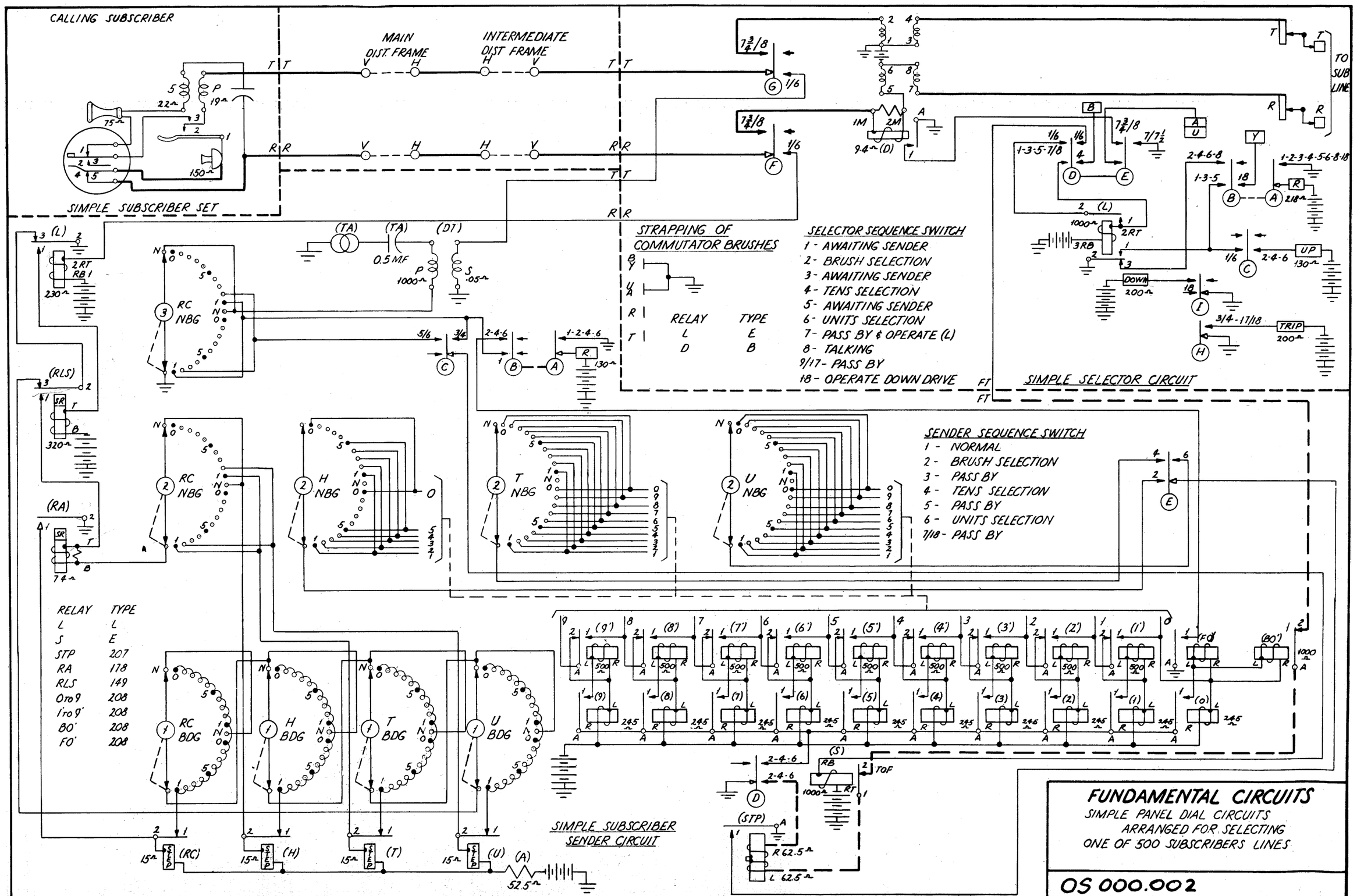

ISSUE	1	2
DATE	2-25-56	4-6-55
BY	NAJS.	LEB

OS 000 002

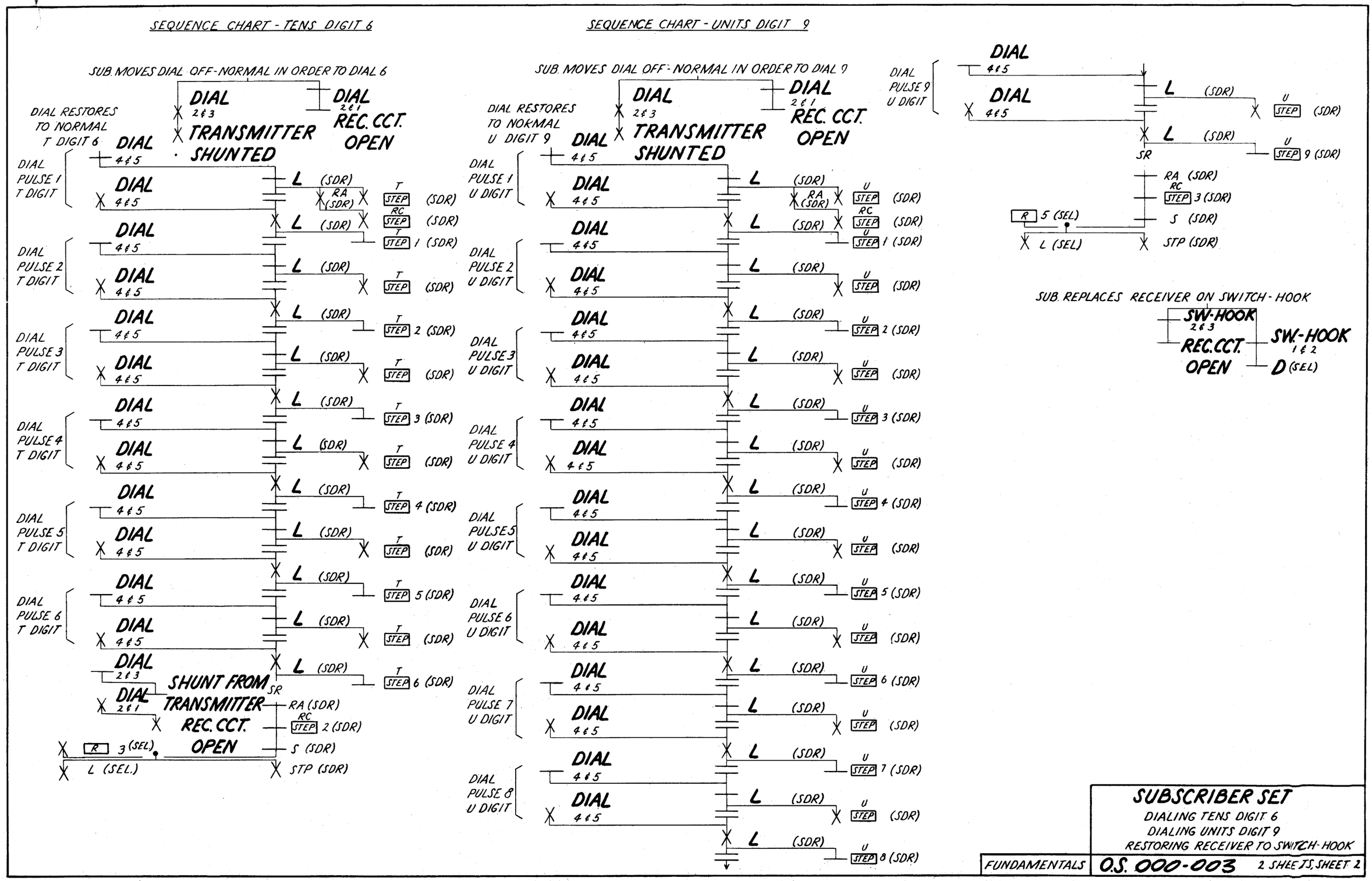

SENDER CIRCUIT

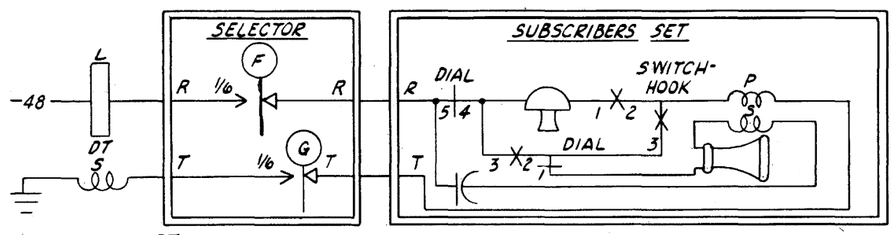

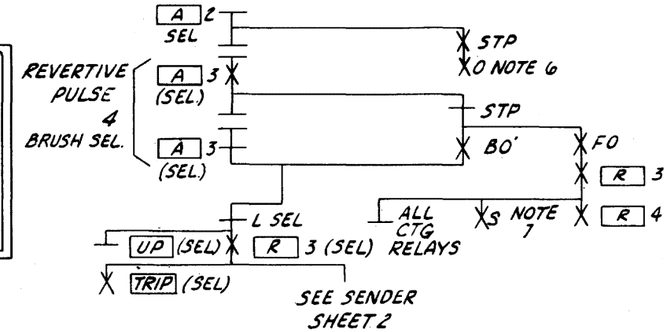

NOTES

1. THE RLS RELAY IS A SLOW RELEASE TYPE RELAY AND STAYS OPERATED BY ITS SLOW RELEASE FEATURE DURING DIALING WHEN THE "L" RELAY IS RELEASED.
2. THE "RA" RELAY IS A SLOW RELEASE TYPE RELAY AND STAYS OPERATED BY ITS SLOW RELEASE FEATURE WHEN THE "L" TYPE RELAY IS OPERATED DURING THE DIALING OF A DIGIT, BUT RELEASES IN BETWEEN THE DIALING OF DIGITS AND AFTER THE LAST DIGIT IS DIALED.
3. THE "H" AND "RC" MAGNETS WHEN ENERGIZED WILL NOT CAUSE THE "H" AND "RC" SWITCHES TO STEP TO THE NEXT SET OF TERMINALS.
4. THE "H" AND "RC" MAGNETS WHEN DEENERGIZED WILL CAUSE THE "H" AND "RC" SWITCHES TO STEP THE SWITCH TO THE NEXT SET OF TERMINALS.
5. THE PRIME COUNTER DOES NOT OPERATE AS IT IS SHUNTED.
6. THE PRIME COUNTERS DO NOT OPERATE AS THEY ARE SHUNTED
7. THE "S" OPERATES BECAUSE THE "TENS" DIGIT IS NOT DIALED THE "S" OPERATED OPENS THE "FT" LEAD AND NO GROUP SELECTION CAN BE MADE UNTIL THE "TENS" DIGIT IS DIALED.

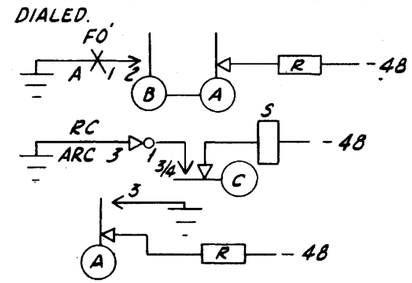

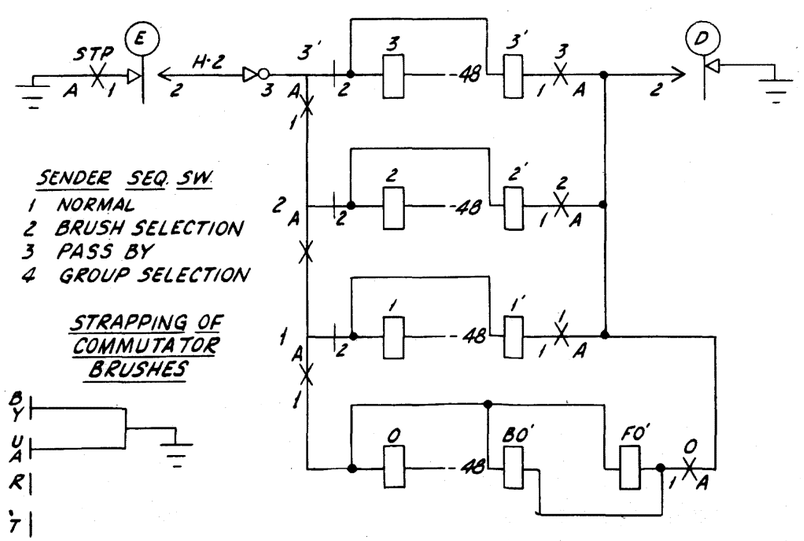

SEQUENCE CHART
SUB. REMOVES RECEIVER FROM SWITCH-HOOK

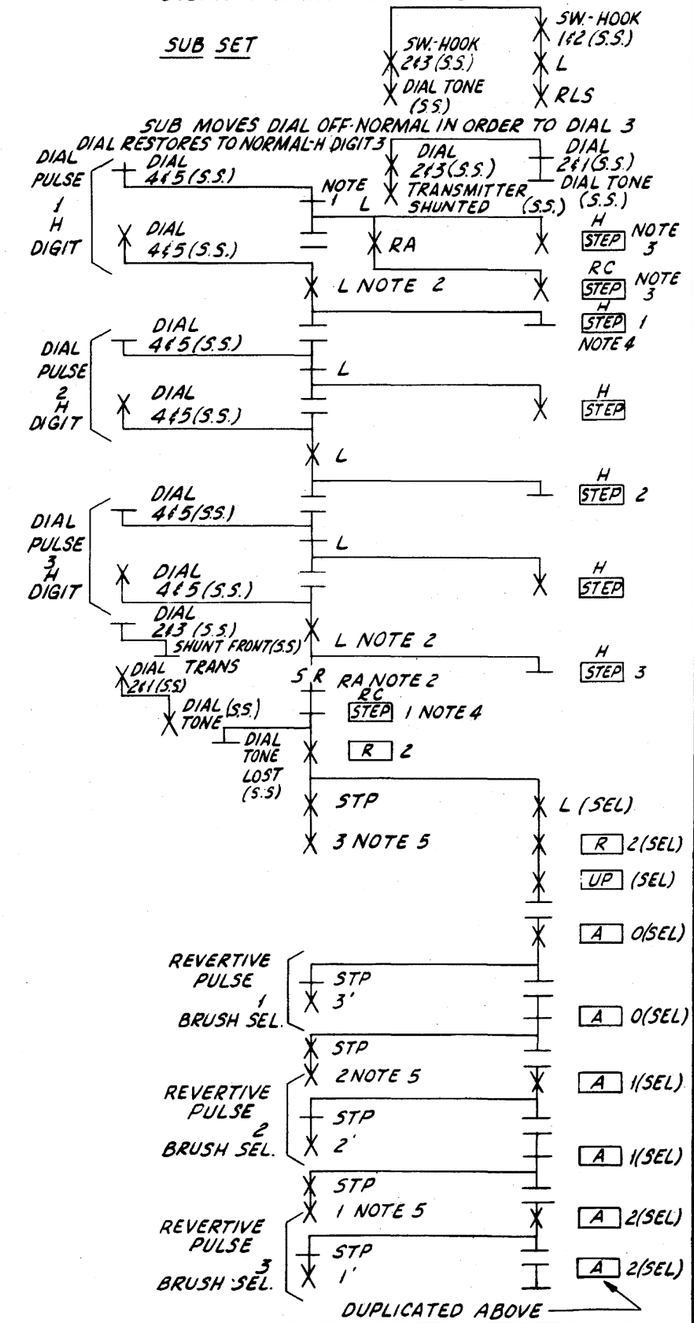

ISSUE	1	2
DATE	12-31-54	4-6-55
BY	N.S.	LEB

OS 000.004

SENDER
RECEIVING H. DIGIT 3, DIAL PULSES
BRUSH SELECTION

FUNDAMENTALS | OS 000-004

SENDER

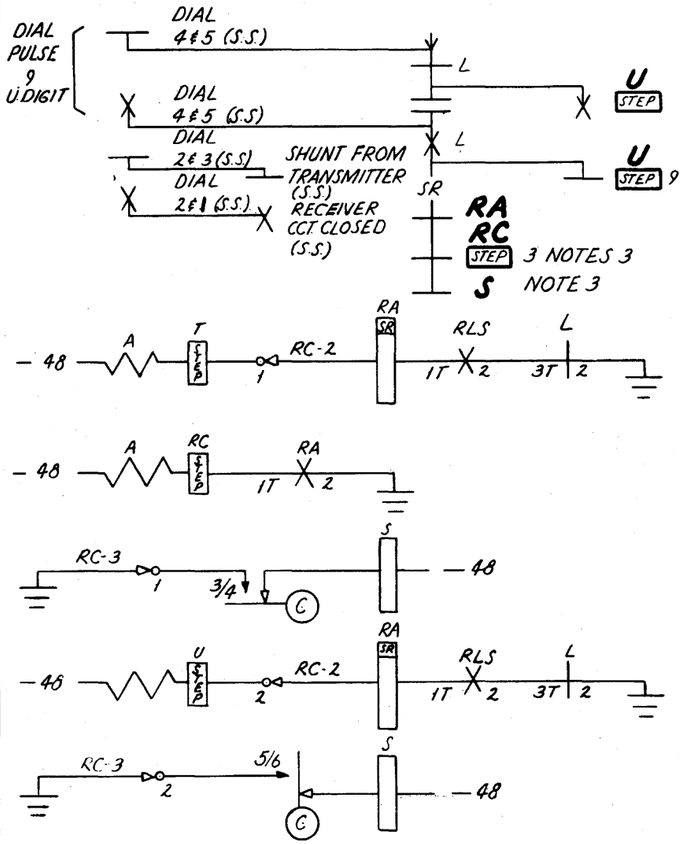

NOTES

1. THE "RA" IS A SLOW RELEASE RELAY AND STAYS OPERATED BY ITS SLOW RELEASE FEATURE WHEN THE "L" RELAY IS OPERATED DURING THE DIALING OF A DIGIT, BUT RELEASES IN BETWEEN THE DIALING OF DIGITS AND AFTER THE LAST DIGIT IS DIALED.
2. THE "T" "U" AND "RC" MAGNETS WHEN ENERGIZED WILL NOT CAUSE THE "T" "U" AND "RC" SWITCHES TO STEP TO THE NEXT SET OF TERMINALS.
3. THE "T" "U" AND "RC" MAGNETS WHEN DE-ENERGIZED WILL CAUSE THE "T" "U" AND "RC" SWITCHES TO STEP TO THE NEXT SET OF TERMINALS.
4. THE "S" RELAY RELEASES BECAUSE THE "TENS" DIGIT IS DIALED
5. THE "S" RELAY RELEASES BECAUSE THE "UNITS" DIGIT IS DIALED.

SEQUENCE CHARTS UNITS DIGIT 9

SUB. MOVES DIAL OFF-NORMAL IN ORDER TO DIAL 9

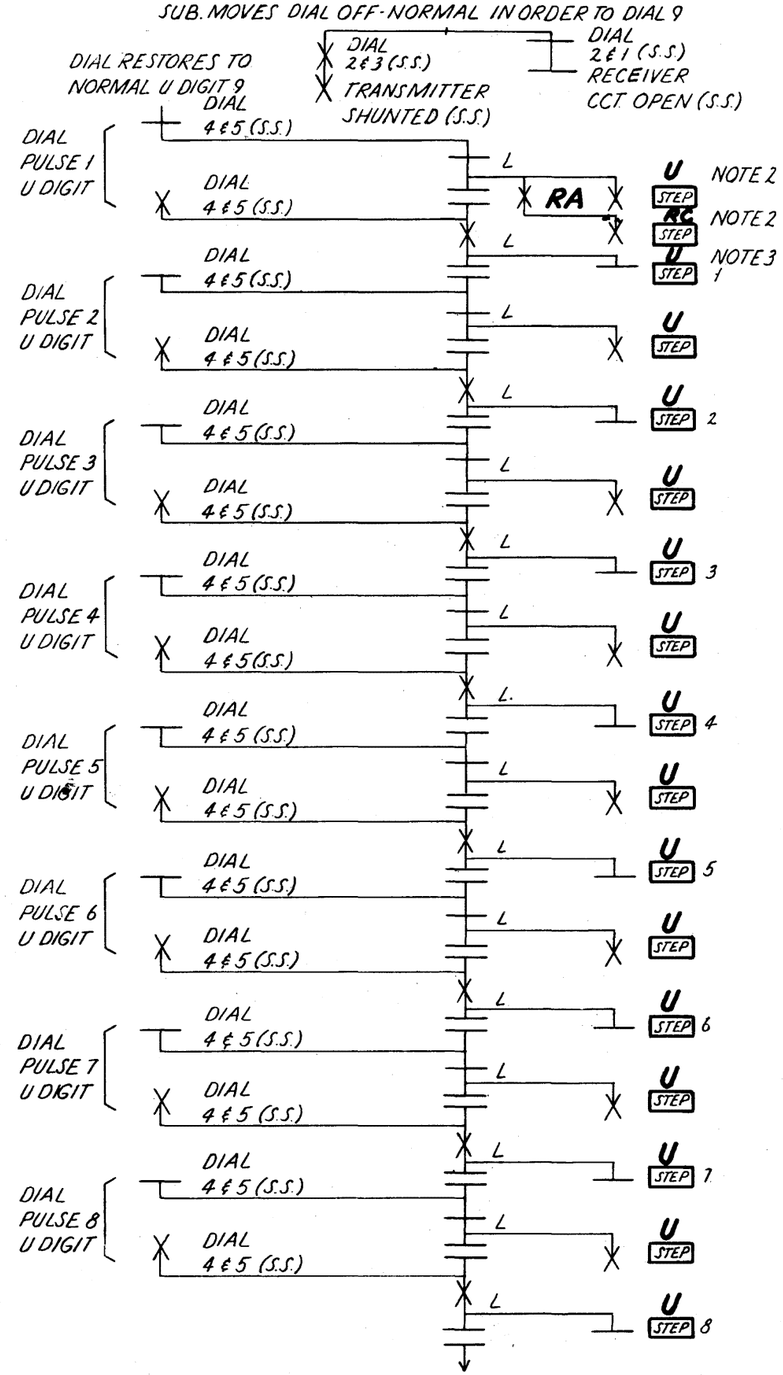

CONTINUED ABOVE UPPER LEFT

SEQUENCE CHART - TENS DIGIT 6

SUB. MOVES DIAL OFF-NORMAL IN ORDER TO DIAL 6

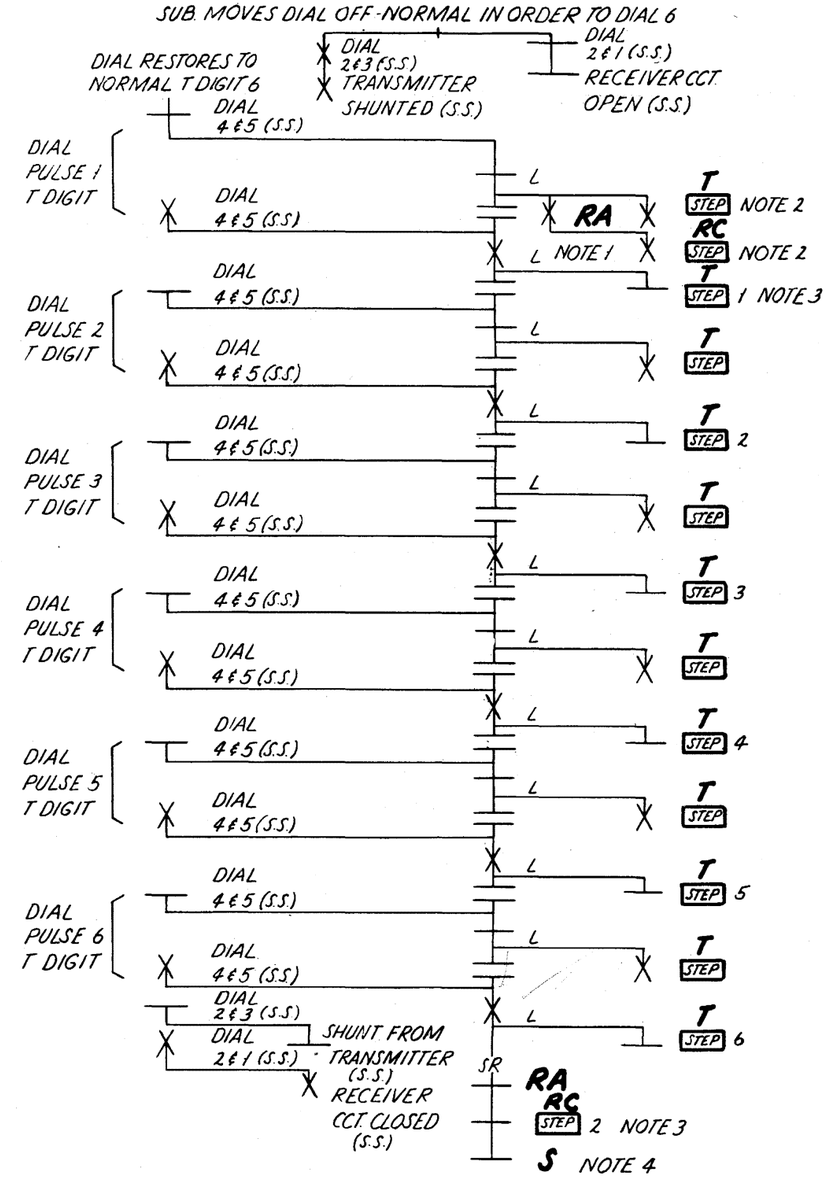

SENDER RECEIVING T DIGIT 6 RECEIVING U DIGIT 9	
FUNDAMENTALS	OS 000-005

ISSUE	1	2	
DATE	2-17-55	4-6-55	
BY	N.A.S.	LEB	

OS 000.005

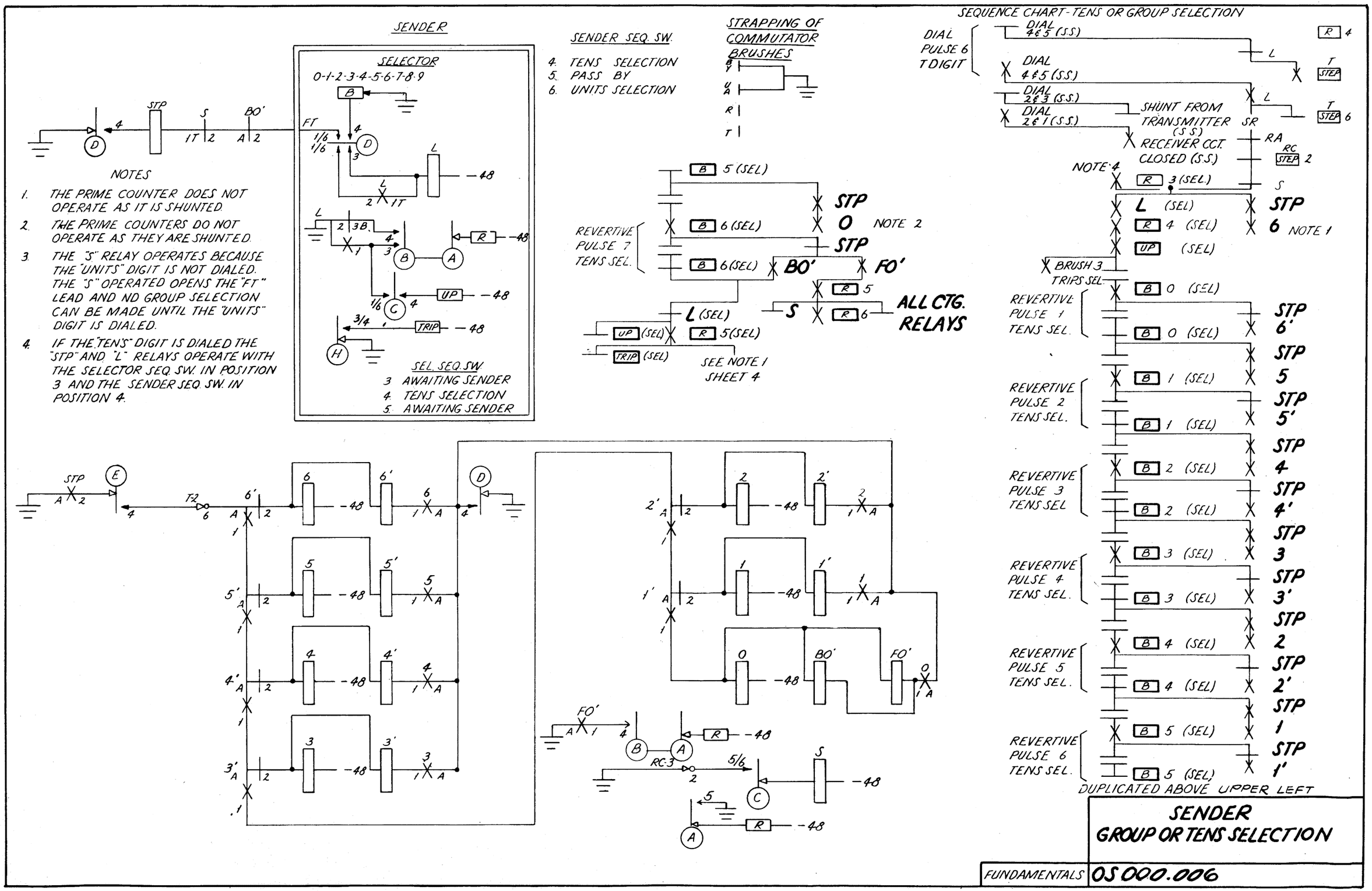

NOTES

1. THE PRIME COUNTER DOES NOT OPERATE AS IT IS SHUNTED.
2. THE PRIME COUNTERS DO NOT OPERATE AS THEY ARE SHUNTED.
3. THE "S" RELAY OPERATES BECAUSE THE "UNITS" DIGIT IS NOT DIALED. THE "S" OPERATED OPENS THE "FT" LEAD AND NO GROUP SELECTION CAN BE MADE UNTIL THE "UNITS" DIGIT IS DIALED.
4. IF THE "TENS" DIGIT IS DIALED THE "STP" AND "L" RELAYS OPERATE WITH THE SELECTOR SEQ. SW. IN POSITION 3 AND THE SENDER SEQ. SW. IN POSITION 4.

ISSUE	1	2
DATE	2-18-55	4-6-55
BY	N.A.S.	LEB

OS 000.006

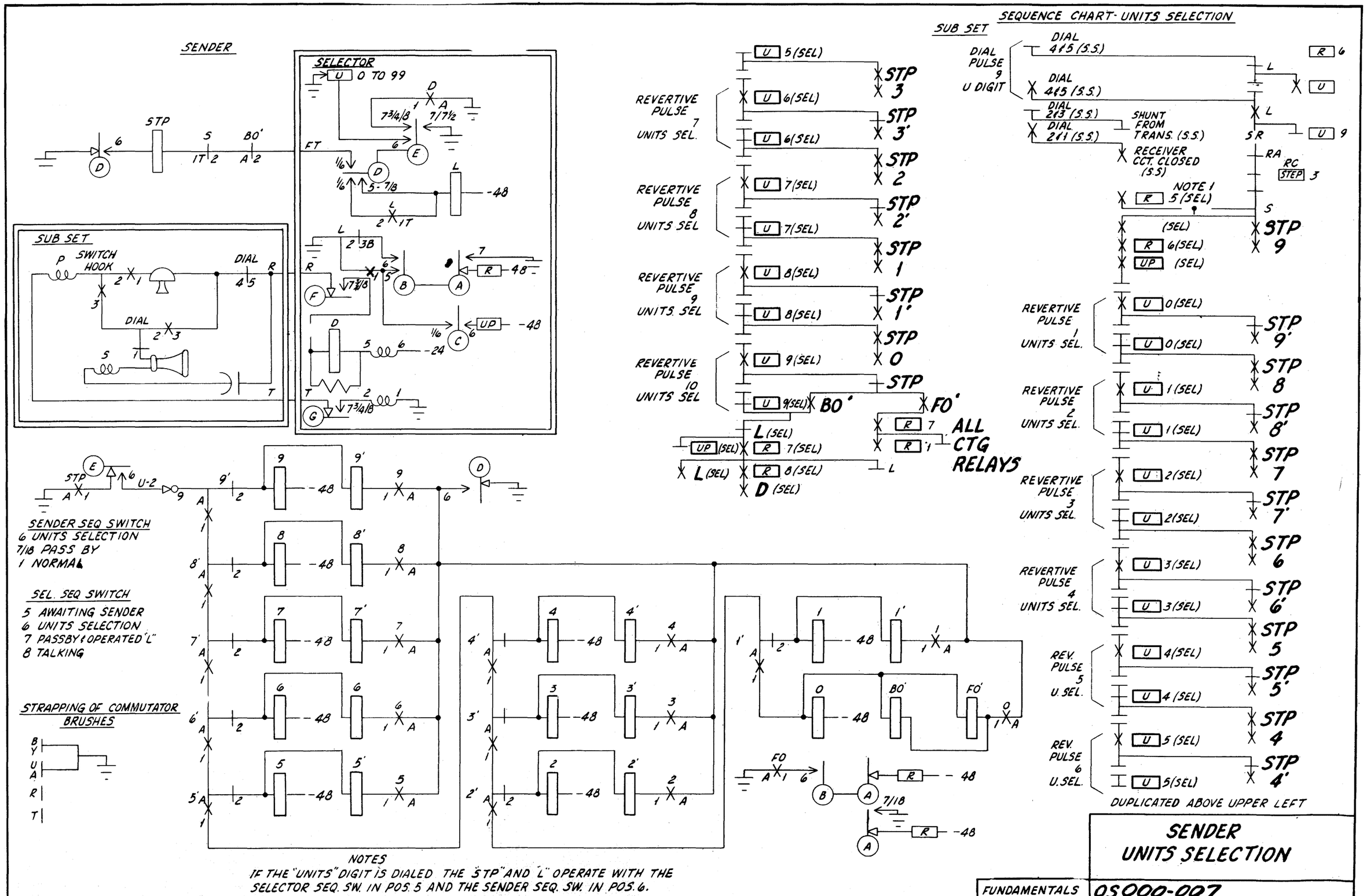

ISSUE	1	2	
DATE	12-31-54	4-6-55	
BY	N.S.	LEB	

OS 000.007

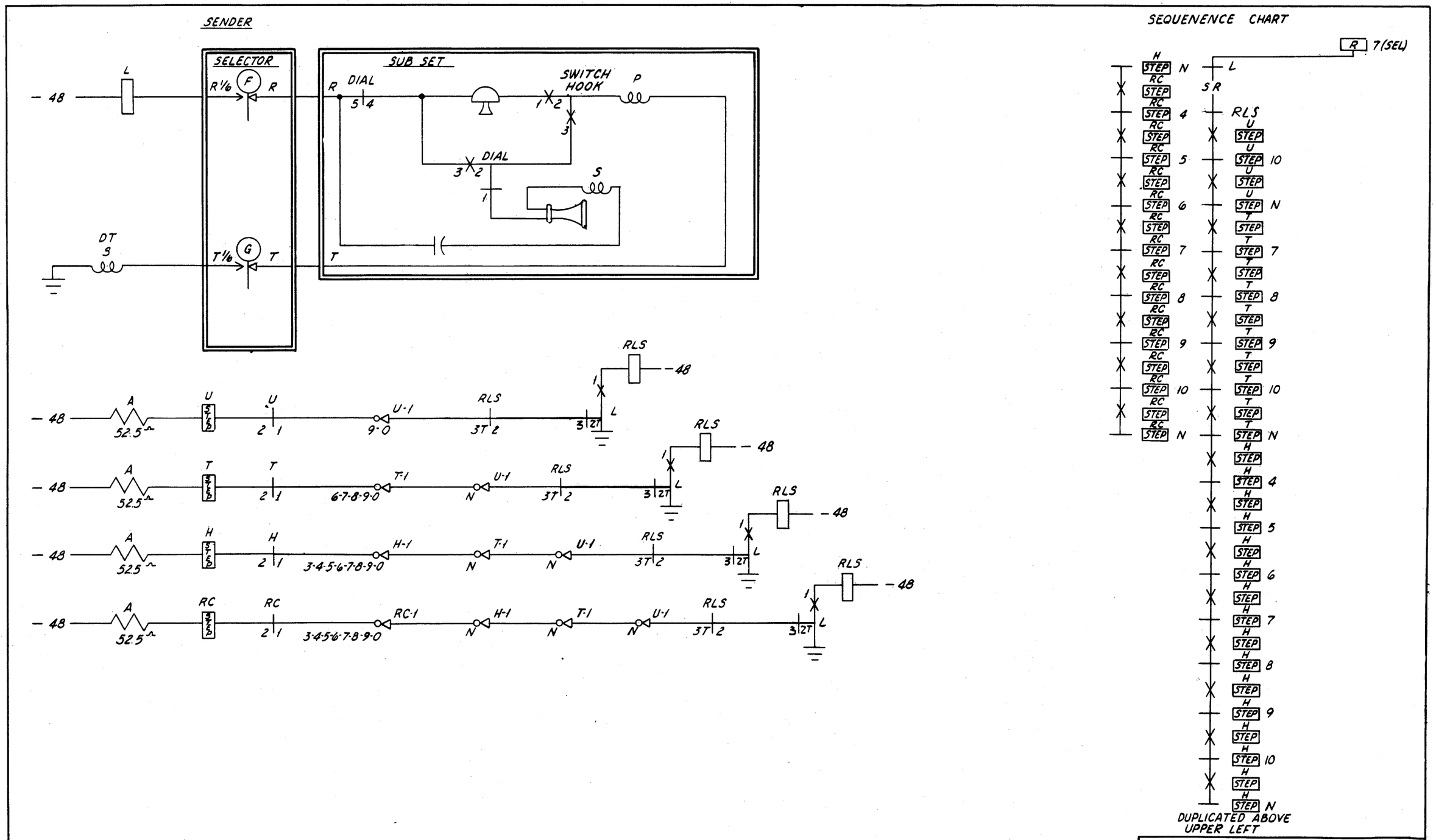

SENDER
RESTORING TO NORMAL

FUNDAMENTALS | O.S. 000-008

ISSUE	1	2
DATE	2-11-55	4-6-55
BY	N.S	LEB

OS 000-008

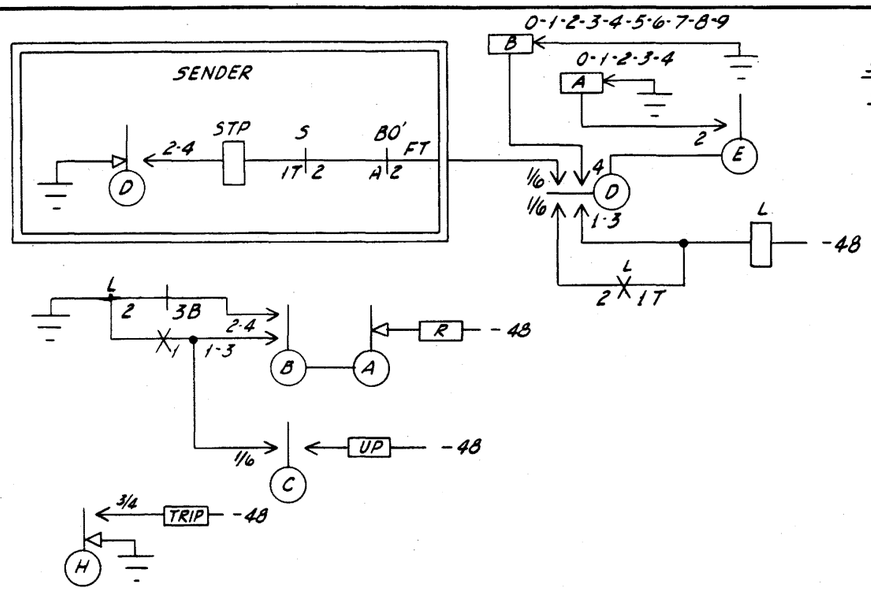

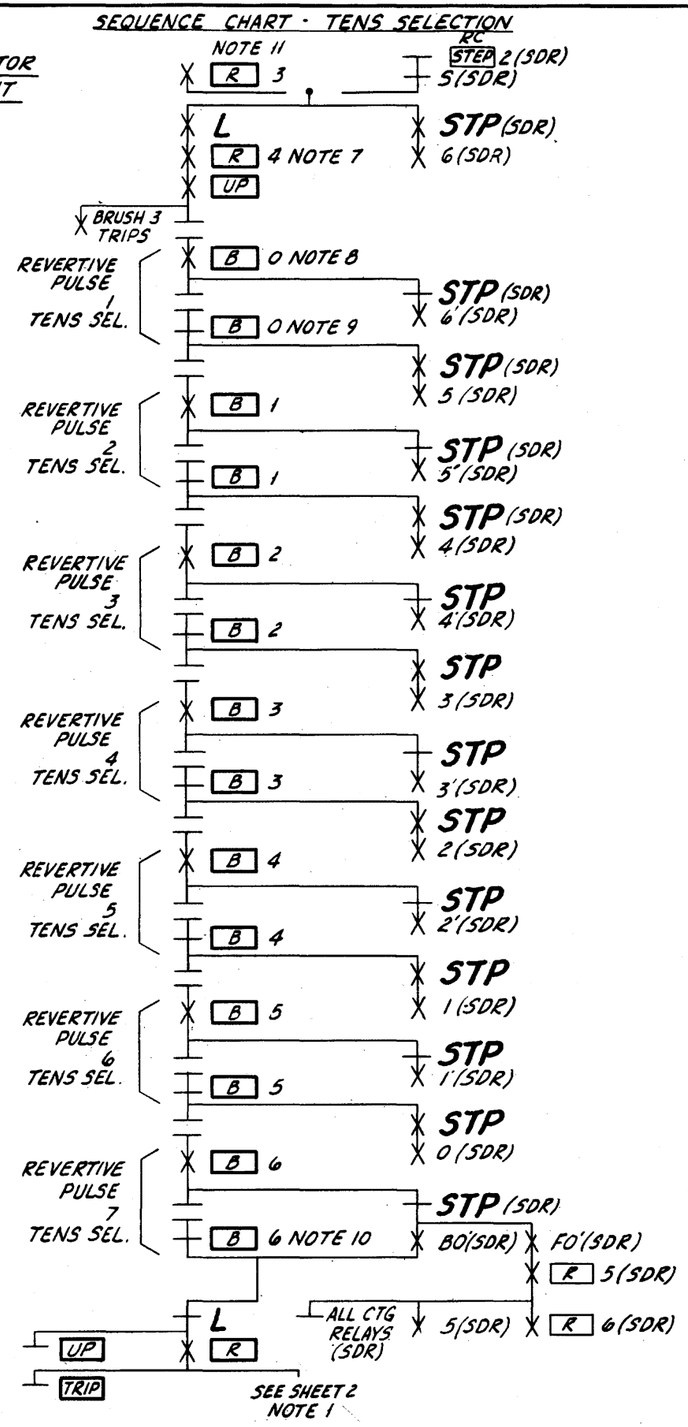

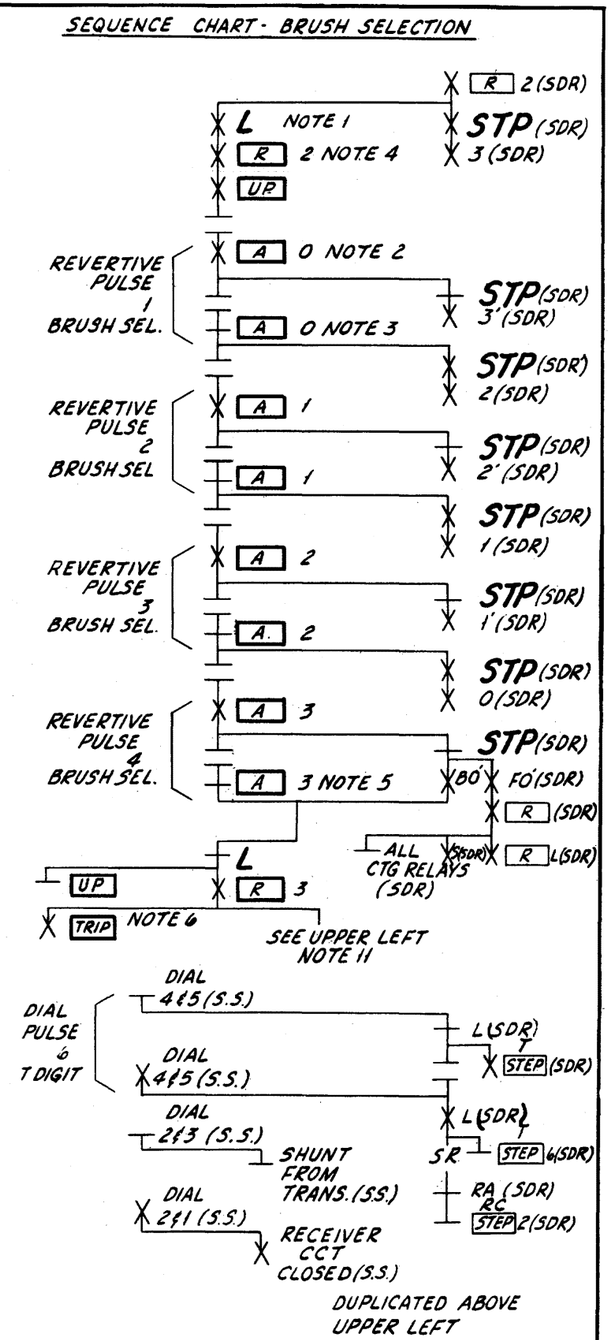

SELECTOR SEQ. SW.

1. AWAITING SENDER
2. BRUSH SELECTION
3. AWAITING SENDER
4. TENS SELECTION
5. AWAITING SENDER

STRAPPING OF COMMUTATOR BRUSHES

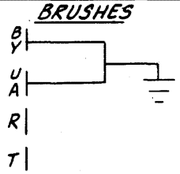

SENDER SEQ. SW.

2 BRUSH SELECTION
3 PASS BY
4 TENS SELECTION
5 PASS BY
6 UNIT SELECTION

NOTES:

1. WHEN THE "L" RELAY OPERATES IT LOCKS TO GROUND ON THE "FT" LEAD COMING FROM THE SENDER. THIS IS THE "L" RELAYS FIRST LOCKING PATH.
2. WHEN THE "A" COMMUTATOR BRUSH MAKES ON AN "A" SEGMENT THE "L" RELAY HAS A SECOND LOCKING PATH.
3. WHEN THE "A" COMMUTATOR BRUSH BREAKS FROM AN "A" SEGMENT THE "L" RELAY LOSES ITS SECOND LOCKING PATH.
4. WHEN THE SELECTOR SEQ. SW. ADVANCES TO 2 THE "L" RELAY LOSES ITS OPERATING PATH BUT STAYS OPERATED BY ITS LOCKING PATH ONE.
5. WHEN THE "BO" RELAY OPERATES IN THE SENDER CKT THE "FT" LEAD IS OPENED AND THE "L" RELAY LOSES ITS FIRST LOCKING PATH. WHEN THE "A" COMMUTATOR BRUSH GETS ON INSULATION THE "L" RELAY LOSES ITS SECOND LOCKING PATH AND RELEASES.
6. THE #3 TRIP FINGER ENGAGES THE #3 MULTIPLE BRUSHES TRIP LEVER.
7. WHEN THE SELECTOR SEQ. SW. ADVANCES TO 4 THE "L" RELAY LOSES ITS OPERATING PATH BUT STAYS UP BY LOCKING PATH ONE.
8. WHEN THE "B" COMMUTATOR BRUSH MAKES ON A "B" SEGMENT THE "L" RELAY HAS A SECOND LOCKING PATH.
9. WHEN THE "B" COMMUTATOR BRUSH BREAKS FROM A "B" SEGMENT THE "L" RELAY LOSES ITS SECOND LOCKING PATH
10. THE "L" RELAY RELEASES WHEN THE "BO" OPERATES IN THE SENDER AND THE "B" COMMUTATOR BRUSH GETS ON INSULATION
11. IF THE "TENS" DIGIT IS DIALED THE "STP" AND "L" OPERATE WITH THE SEL. SEQ. SW. IN 3 AND THE SENDER SEQ. SW. IN 4

ISSUE	1	2
DATE	12-31-54	4-6-55
BY	N.S.	L.E.B.

OS 000.009

SELECTOR BRUSH SELECTION GROUP OR TENS SELECTION

FUNDAMENTALS — OS 000-009

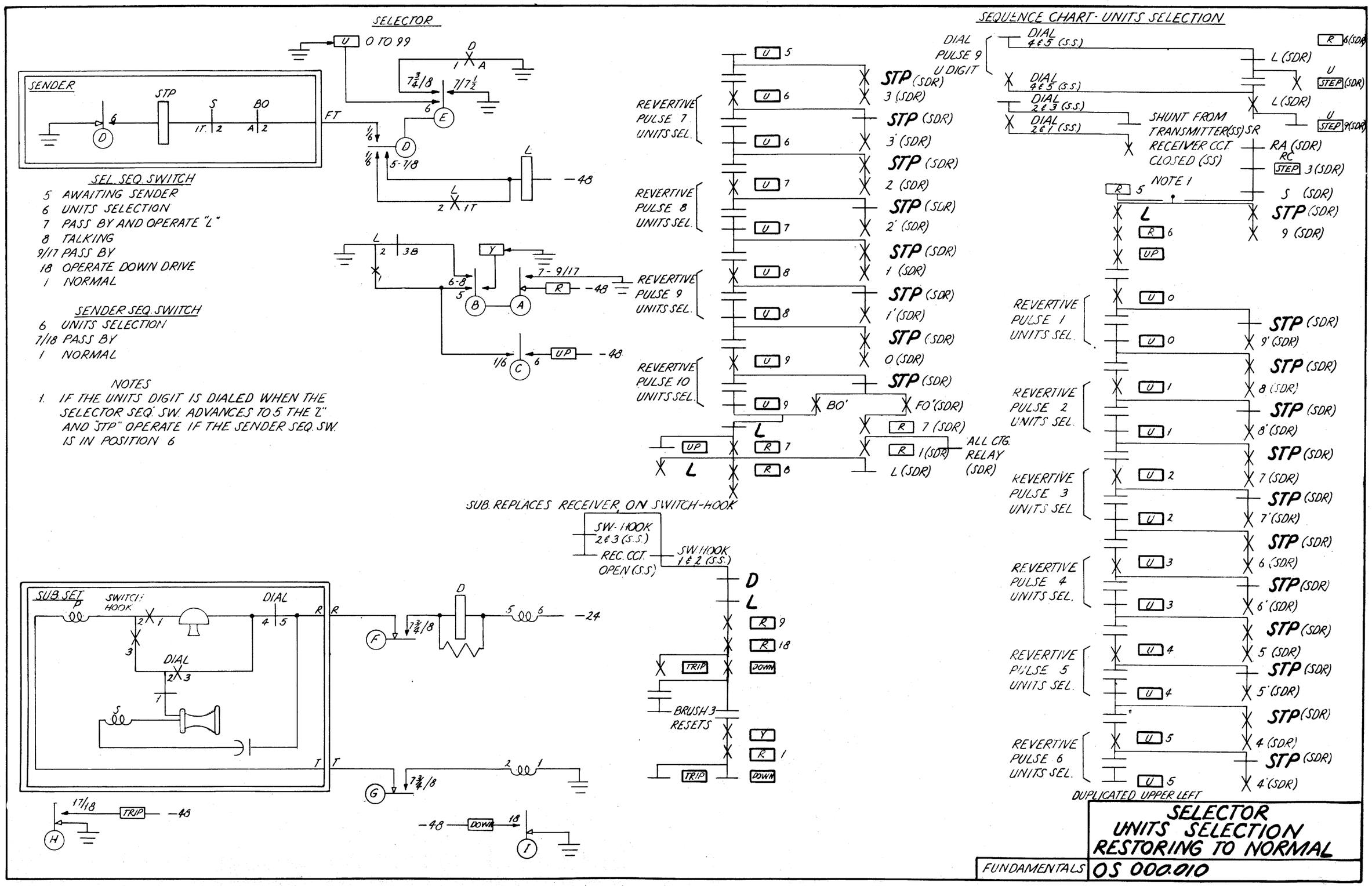

ISSUE	1	2
DATE	2-22-55	4-6-55
BY	N.A.S.	LEB

OS 000.010

1. RELAY OR OTHER APPARATUS OPERATIONS AND RELEASES ONLY ARE SHOWN.

2. VERTICAL PROGRESSION DOWNWARD SHOWS THE TIME PHASE OF RELAY MOVEMENTS (OPERATIONS OR RELEASES)

3. OPERATE SYMBOLS:

(A) ✕ A — INDICATES A RELAY COMES TO FULLY OPERATED CONDITION AT THIS POINT. FOR POLARIZED RELAYS, THE ARMATURE HAS MOVED TO FRONT OR LEFT CONTACT.

(B) ⊠ (B) CHG — INDICATES INTERRUPTER CHG HAS CLOSED ITS BACK CONTACT.

(C) ✕ [R] 2 LK — INDICATES LINK SEQUENCE SWITCH HAS ADVANCED TO POSITION 2.

(D) ✕ [UP] S LK — INDICATES LINK SENDER SELECTOR UP-DRIVE MAGNET IS OPERATED.

4. RELEASE SYMBOLS:

(A) ┼ B — INDICATES B RELAY COMES TO FULLY RELEASED CONDITION AT THIS POINT. FOR POLARIZED RELAYS, THE ARMATURE HAS MOVED TO BACK OR RIGHT CONTACT.

(B) ⊞ (F) DISC — INDICATES INTERRUPTER DISC HAS OPENED ITS FRONT CONTACT.

(C) ┼ [UP] (D) LK — INDICATES LINK CIRCUIT DISTRICT SELECTOR UP-DRIVE MAGNET IS RELEASED.

5. SYMBOL NOTATION:

(A) ✕ SS- — INDICATES ONE OR MORE OF THE RELAYS DESIGNATED SSA TO SSK HAVE OPERATED.

(B) ✕ A1-5 — INDICATES ALL OF THE RELAYS DESIGNATED A1 TO A5 HAVE OPERATED.

(C) ✕ GA,SW — INDICATES BOTH GA AND SW RELAYS HAVE OPERATED FROM THE SAME CAUSE.

(D) ✕ A/B — INDICATES THAT EITHER ONE OF THE RELAYS HAS OPERATED.

6. CONNECTING LINES:

(A) VERTICAL LINES ARE USED TO LINK CAUSES WITH EFFECTS ON SUCCEEDING LINES AS:

LINE 1 ✕ L
LINE 2 ✕ L1

INDICATES THAT THE L1 RELAY ON LINE 2 HAS OPERATED AS A RESULT OF L RELAY OPERATING ON LINE 1.

(B) HORIZONTAL OR OBLIQUE LINES ARE USED TO CONNECT MULTIPLE CAUSES SO AS TO INDICATE THEIR COMMON EFFECT OR TO CONNECT MULTIPLE EFFECTS TO INDICATE THEIR COMMON CAUSE AS:

LINE 1 ✕ A ✕ B
LINE 2 ✕ C

INDICATES THAT THE C RELAY HAS OPERATED ON LINE 2 AS A RESULT OF BOTH A AND B OPERATION ON LINE 1. NEITHER A NOR B OPERATION ALONE IS SUFFICIENT TO OPERATE C RELAY.

LINE 1 ✕ A ✕ B ✕ C
LINE 2 ✕ D

INDICATES THAT THE D RELAY HAS OPERATED ON LINE 2 AS A RESULT OF EITHER A, B, OR C RELAY OPERATION ON LINE 1.

7. ARROWHEADS:

ARROWHEADS ARE USED TO SHOW THE PRECISE MEANING TO BE ATTACHED TO THE CONNECTING LINE.

(A) IF ARROWHEAD IS ON A HORIZONTAL LINE AND IS LOCATED BETWEEN TWO VERTICAL LINES, IT GIVES THE HORIZONTAL LINE DIRECTION INSOFAR AS CAUSE TO EFFECT IS CONCERNED. FOR EXAMPLE:

✕ CLA ✕ LF
✕ FLA ✕ Z ✕ SW

INDICATES Z AND SW WILL NOT OPERATE UNTIL BOTH THE LF AND CLA HAVE OPERATED BUT THE FLA WILL OPERATE INDEPENDENTLY OF THE LF.

(B) IF ARROWHEAD IS ON A HORIZONTAL ADJOINING A VERTICAL LINE THE EFFECT OF THE ARROWHEAD IS LIMITED TO THE OPERATION SHOWN DIRECTLY BELOW: FOR EXAMPLE:

✕ CLA ✕ LF
✕ FLA ✕ Z ✕ SW

INDICATES SW IS OPERATING FROM LF ONLY; THE Z FROM THE LF AND CLA; AND THE FLA FROM THE CLA ONLY.

INDICATES TIME INTERVAL

PLANT SCHOOL FOR TRAINING PURPOSES ONLY	
LEGEND FOR SEQUENCE CHARTS	
PANEL SYSTEM BATTERY CUT-OFF	SC-300

SHEET 1 OF 2

ISSUE 1 9-26-49

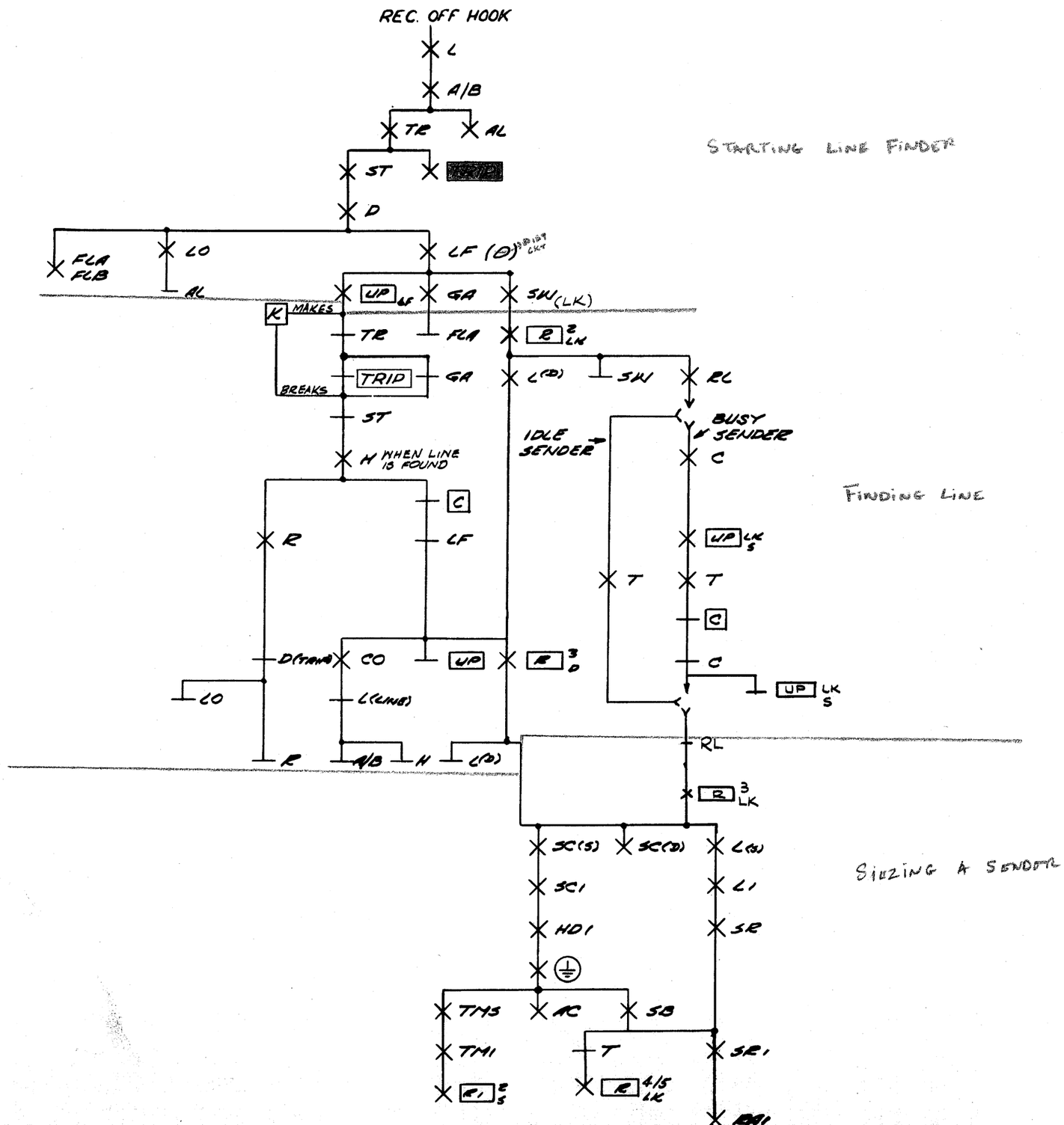

PLANT SCHOOL FOR TRAINING PURPOSES ONLY	
RECEIVER OFF THE HOOK TO SENDER SEIZURE	
PANEL SYSTEM BATTERY CUT-OFF	SC-301

ISSUE 1 6-1-70

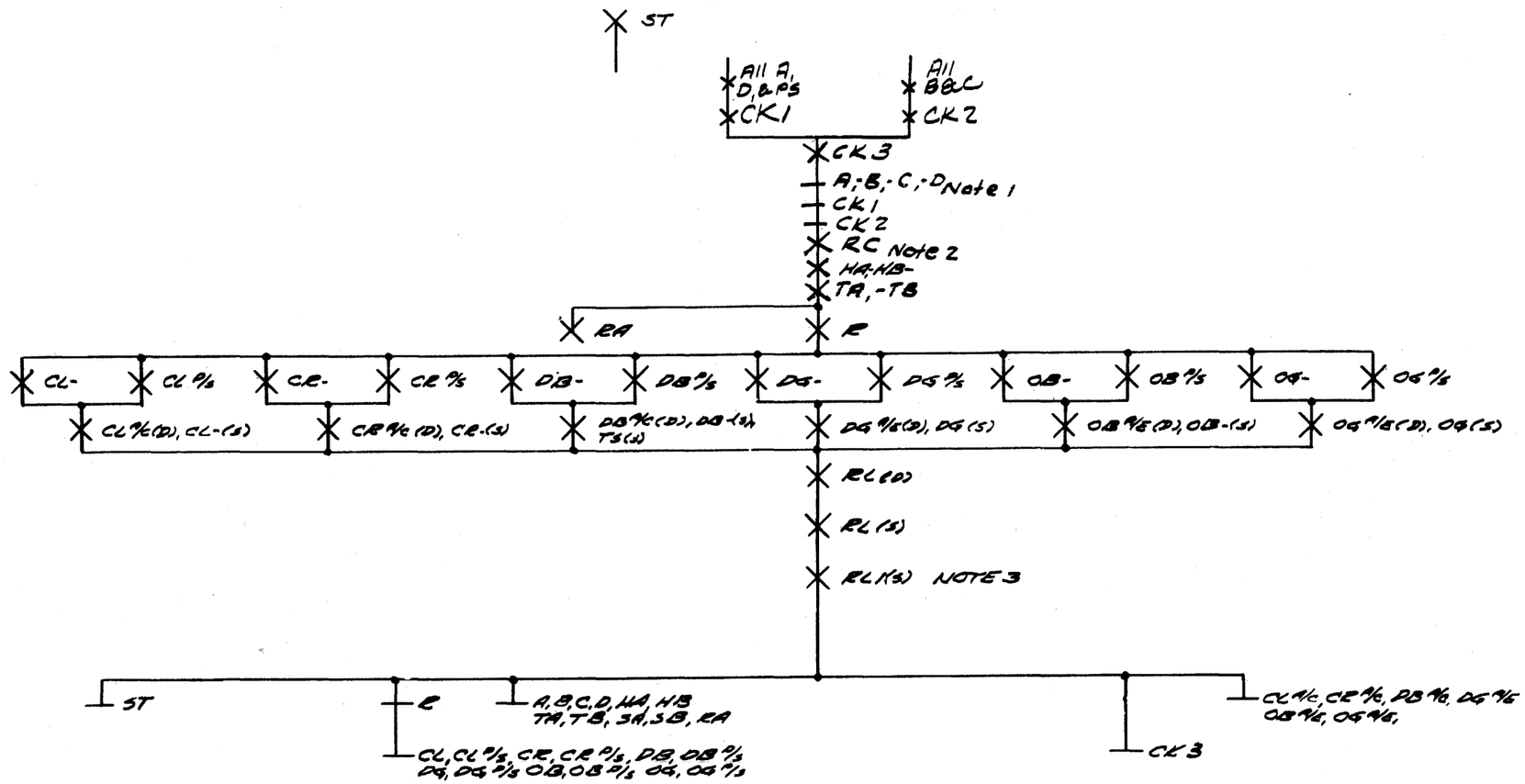

NOTES

1. WHEN "CK3" OPERATES, "A" "B" "C" "D" RELAYS RELEASE EXCEPT THOSE HELD BY SENDER RELAYS.

2. "A" "B" "C" RELAYS HELD OPERATED AFTER "CK3" OPERATES, OPERATE "HA", "HB", "TA", "TB" "D" RELAYS OPERATE "SA", "SB".

3. WHEN "RL1"(S) OPERATES ALL CONNECTOR RELAYS RELEASE OPENING ALL LEADS TO DECODER.

PLANT SCHOOL FOR TRAINING PURPOSES ONLY	
DECODER FUNCTIONS	
PANEL SYSTEM BATTERY CUT-OFF	SC-302

CIRCUIT	DRAWING	ISSUE
LINE - TRIP - START & LINK CIRCUIT	SD-20294-01	31D
LINE FINDER & DISTRICT CIRCUIT	SD-21077-011	20D
" " " "	-012	18D
DECODER CONNECTOR CIRCUIT	SD-21187-011	15D
" " "	-012	"
" " "	-013	"
" " "	-014	"
DECODER CIRCUIT	SD-21277-011	25D
" "	-012	"
" "	-013	"
" "	-014	"
" "	-015	"
" "	-016	"
" "	-017	"
" "	-018	"
" "	-019	"
INCOMING SELECTOR CIRCUIT FROM PANEL-LOCAL OR TANDEM	SD-21115-011	24D
" " " " " " " "	-012	"
3-WIRE OFFICE SELECTOR CIRCUIT	ES-240252	9D
FINAL SELECTOR CIRCUIT	SD-21200-01	12D
LINE FINDER-DISTRICT SELECTOR CIRCUIT 2-PARTY	SD-21079-011	18D
" " " " " "	-012	17D
" " " " " "	-013	"
LINE FINDER-DISTRICT & COIN CONTROL CIRCUIT	SD-21350-011	19D
" " " " " "	-012	"
" " " " " "	-013	"
SUBSCRIBERS SENDER CIRCUIT	SD-21193-0101	53D
" " "	-0102	"
" " "	-0103	"
" " "	-0104	"
" " "	-0105	"
" " "	-0106	"
" " "	-0107	"
" " "	-0108	"

PLANT SCHOOL
FOR TRAINING PURPOSES ONLY

S.D. DRAWINGS AND ISSUES

PANEL SYSTEM BATTERY CUT-OFF | LISTING