SHEET INDEX

CONTENTS	SHEET NO. PRIOR TO ISSUE 12	SHEET NO. CURRENT ISSUE	ISSUE NO. 12	13	14	SHEET NO.
SHEET INDEX SUPPORTING INFORMATION	A	A1	12	13	14	A1
OPTION INDEX	1	A2	12	13	14	A2
FS 1 INCOMING TRUNK	2	B1A	12	13	14	B1A
		B1B			14	B1B
FS 2 TEST CIRCUIT FOR TESTING ATTENDANT LOOP CKT FOR 608B OR 608D PBX FS 3 PATCHING CORDS FOR TEST CKT FS 4 BUSY LINE TRANSFER FS 5 DA TRANSFER	9	B2	12	13	14	B2
APP FIG. 1	3	C1	12	13	14	C1
APP FIG. 2,3,4,5		C2			14	C2
WORKING LIMITS CIRCUIT NOTES 101-104		D1	12	13	14	D1
CIRCUIT NOTES 105 TO END EQUIPMENT NOTES INFORMATION NOTES TRANSMISSION TEST REQT		D2			14	
SC 1 INCOMING CALL TO ATTENDANT SC 2 DISCONNECT SC 3 INCOMING CALL TO STATION SC 4 CALLED STATION FLASH FOR TRANSFER SC 5 DIAL TRANSFER CALLED STATION DIALS ATTENDANT	4	E1	12	12	14	E1
SC 6 BUSY LINE TRANSFER SC 7 DO NOT ANSWER TRANSFER	10	E2	12	12	14	E2
SC 8 DISCONNECT	11	E3	12	12	14	E3
SC 9 INCOMING CALL SC 10 DIRECTORY NUMBER CALL		E4			14	E4
SC 11 ATTENDANT RECALL SC 12 DIAL TRANSFER SC 13 DIAL TRANSFER CALLED PARTY DIALS ATTENDANT		E5			14	E5
SC 14 BUSY LINE TRANSFER SC 15 DONT ANSWER TRANSFER		E6			14	E6
SC 16 DISCONNECT ON CALL TO STATION SC 17 DISCONNECT ON A DIRECTORY NUMBER CALL		E7			14	E7
CKT REQT TABLE TIMING REQD.	5	F1	12	12	14	F1
CAD. 1, 2, 3	6	G1	12	12	12	G1
CAD. 4, 5, 6, 7, 8	7	G2	12	12	14	G2
CAD. 9, 10, 11	8	G3	12	12	14	G3
CAD. 12, 13		G4	12	12	14	G4
PART OF CAD 14		G5			14	G5
PART OF CAD 14, CAD 15		G6			14	G6
CAD 16-24		G7			14	G7

SUPPORTING INFORMATION

CATEGORY	NO.
EQUIPMENT DRAWINGS	J58837D J58837CP J58837CR

SHEET INDEX NOTES

1. WHEN CHANGES ARE MADE IN THIS DRAWING, ONLY THOSE SHEETS AFFECTED WILL BE REISSUED.
2. THIS SHEET INDEX WILL BE REISSUED AND BROUGHT UP TO DATE EACH TIME ANY SHEET OF THE DRAWING IS REISSUED, OR A NEW SHEET IS ADDED.
3. THE ISSUE NUMBER ASSIGNED TO A CHANGED OR NEW SHEET WILL BE THE SAME ISSUE NUMBER AS THAT OF THE SHEET INDEX.
4. SHEETS THAT ARE NOT CHANGED WILL RETAIN THEIR EXISTING ISSUE NUMBER.
5. THE LAST ISSUE NUMBER OF THE SHEET INDEX IS RECOGNIZED AS THE LATEST ISSUE NUMBER OF THE DRAWING AS A WHOLE.

DWG ISS	C D ISS	DWG ISS	C D ISS	DWG ISS	C D ISS
3B	2B	4B	3B	5B	3B
6AC	3B	7B	4B	8B	4B
9D	4B	10AC	5AC	11D	5AC

DWG ISS	EE OR CD ISSUE	DATE ISSUE	DRN	APPD
12AC	5AC APP 2AC	10-8-86	GAH FLS RLS	AEK LAH RHP
13AC	5AC APP 3AC	5-2-87	CED RJS EAA	AEK LAH RHP
14B	6B	1-4-72	RFN RWK HCA CBH	AEK FLS AFR

14

SD-65812-01 1J07

PBX SYSTEMS
NO. 701B
INCOMING TRUNK CIRCUIT

ARRANGED TO TRANSFER STATION CALLS AND ROUTE DIRECTORY NUMBER CALLS TO ATTENDANT FOR USE WITH INWARD DIALING

(2)

AT&TCO STANDARD

SD-65812-01-A1
24 SHEETS

BELL TELEPHONE LABORATORIES INCORPORATED

SIZE 6S

SD-65812-01-A1

TCI Library- http://www.telephonecollectors.info/

OPTION INDEX

APP OR WRG	LOCATION
4	APP FIG. 4, 2A8
Z	IA/B0, IA/C0
Y	IA/B0, IA/C0
X	APP FIG. 1
W	APP FIG. 1
V	IB/F8, 2G5
T	IB/F8, 2G5
S	2F4
R	2F4
Q	IA/G0
N	APP FIG. 1, IA/F0
M	APP FIG. 1
K	IA/D1
J	IA/D1
H	2F7, 2G7
G	IB/G9
F	IB/F2
E	IA/C7, IA/E1, IA/G1
B	IA/C6, IA/C7, IA/F1, IA/G1, IB/A8, IB/E2
A	APP FIG 1, IB/G7
ZA	2F7, 2G7
ZB	2F7, 2G7
ZC	APP FIG. 1, IB/A8, IB/B8, IB/D7
ZD	IB/B8, IB/D7
ZE	APP FIG. 1, IA/E7, IA/E8, IA/F2, IA/H1, IB/A3, IB/C2, IB/F0, IB/F3, IB/F4, IB/G3, IB/G5, IB/G6
ZF	IA/E2, IA/E6, IA/E8, IB/A4, IB/C7, IB/D5, IB/E1, IB/G4
ZG	APP FIG. 1, 2A5, IA/B2, IA/B3, IA/D2, IA/D3, IA/E1, IB/B1, IB/C7, IB/C8, IB/E8
ZH	IA/A2, IA/A3, IA/D2, IA/D3, IA/E1, IB/C7, IB/E7
ZI	IA/E7
ZJ	IA/E7
ZK	IB/H3, 2B5
ZL	IB/H3, 2B5
ZM	IA/B7, IA/F2, IB/B2

APP OR WRG	LOCATION
ZN	IA/B7, IA/C7, IA/F1 IA/F2, IA/G1, IB/A8, IB/B2, IB/E2
ZO	IA/C5, IA/C6, 2F7
ZP	IA/C5, IA/C5, 2F7
ZQ	IA/B3, IA/C4
ZR	APP FIG. 1, IA/B4, IA/C4, IA/E3
ZS	APP FIG. 1, IA/C1, IA/E1
ZT	APP FIG. 1, IA/E1
ZU	IB/G8
ZV	IB/G8
ZW	IA/G0
ZX	IB/F5
ZY	APP FIG. 4, 2B9, IB/F5
ZZ	2B6
YA	APP FIG. 1, 2B6
YB	IA/G0
YC	APP FIG 1, IA/E7, IA/E8, IA/F2, IA/H1 IB/A3, IB/C2, IB/F0 IB/F3, IB/F4, IB/G3, IB/G5, IB/G6
YD	IB/A8
YE	APP FIG. 1, IB/B8, IB/D7
YF	IB/B4, IB/D7
YG	IB/E6, 2B7
YH	IB/A1, IB/B8, IB/E5, IB/F5, 2C7, 2D8, 2D9
YI	2C6
YJ	IA/E2, IB/A8, 2C5
YK	APP FIG. 1, IA/E3, IA/E4, IA/F3, IB/D4
YL	IB/F2, IB/H2
YM	APP FIG. 1
YN	IA/D3, IA/F3, IA/F4, IA/F5, IA/G4
YO	IB/B4
YP	APP FIG. 5
YQ	IA/E4
YS	APP FIG. 1, IA/B4 IB/G6

APP OR WRG	LOCATION
YT	IA/B4, IA/C4, IA/E3
YU	IA/D7, IB/C3, IB/D3, IB/D5, IB/E4
YV	IA/D7, IA/E3, IB/B4, IB/D5, IB/E5
YW	IA/B7, IA/F2, IB/E6
YX	IA/F1
YY	APP FIG. 1, IA/E2, IA/E7, IA/E8, IA/F1, IA/H1, IB/A4, IB/C2, IB/C5, IB/F0, IB/F3, IB/F4, IB/G3, IB/G5, IB/G6
YZ	IB/C2, IB/B4, IB/G4
XA	IB/G4
XB	IB/E0
XC	IB/D4
XD	IB/C5, IB/D4
XE	APP FIG. 1, IA/D7, IB/D6, IB/E8, IB/F7, IB/G5, 2G4
XF	APP FIG. 1, IA/D7, IA/E1, IB/C1, IB/C7, IB/D7, IB/E6, IB/E7, IB/E8, IB/F1, IB/F7, IB/G5, 2G4
XG	IA/F1
XH	IB/F6
XI	IB/E6
XJ	APP FIG. 1, IA/B3, 2C9, 2G9
XK	IB/F2
XL	IB/F2, IB/H3
XM	IA/A2, IA/A3, IA/D2, IA/D3
XN	IA/B2, IA/B3, IA/D2, IA/D3, IA/E1, IA/F7, IB/D2, IB/D7, IB/G1
XO	IA/E7, IA/E8, IA/F8, IA/G1, IB/D0, IB/E0, 2G6
XP	IA/E7, IA/E9, IA/F8, IA/G1, IB/D0, IB/D1, 2C8, 2D9, 2G7
XQ	IA/E9

APP OR WRG	LOCATION
XR	IB/G6
XS	2A8
XT	2B8, 2D8
XU	APP FIG. 1, IB/B5
XV	APP FIG. 1
XW	APP FIG. 1
XX	IA/D1
XY	IA/F0
XZ	APP FIG 1, IA/F0
WA	IA/F0

DRAWING ISSUE		
12AC	RCZ RHP	HW
13AC	CED RHP	
14B		JR

14

INCOMING TRUNK CIRCUIT

SD-65812-01-A2

BELL TELEPHONE LABORATORIES INCORPORATED

SIZE 6S

PRINTED IN U.S.A.

SD-65812-01-A2

TCI Library- http://www.telephonecollectors.info/

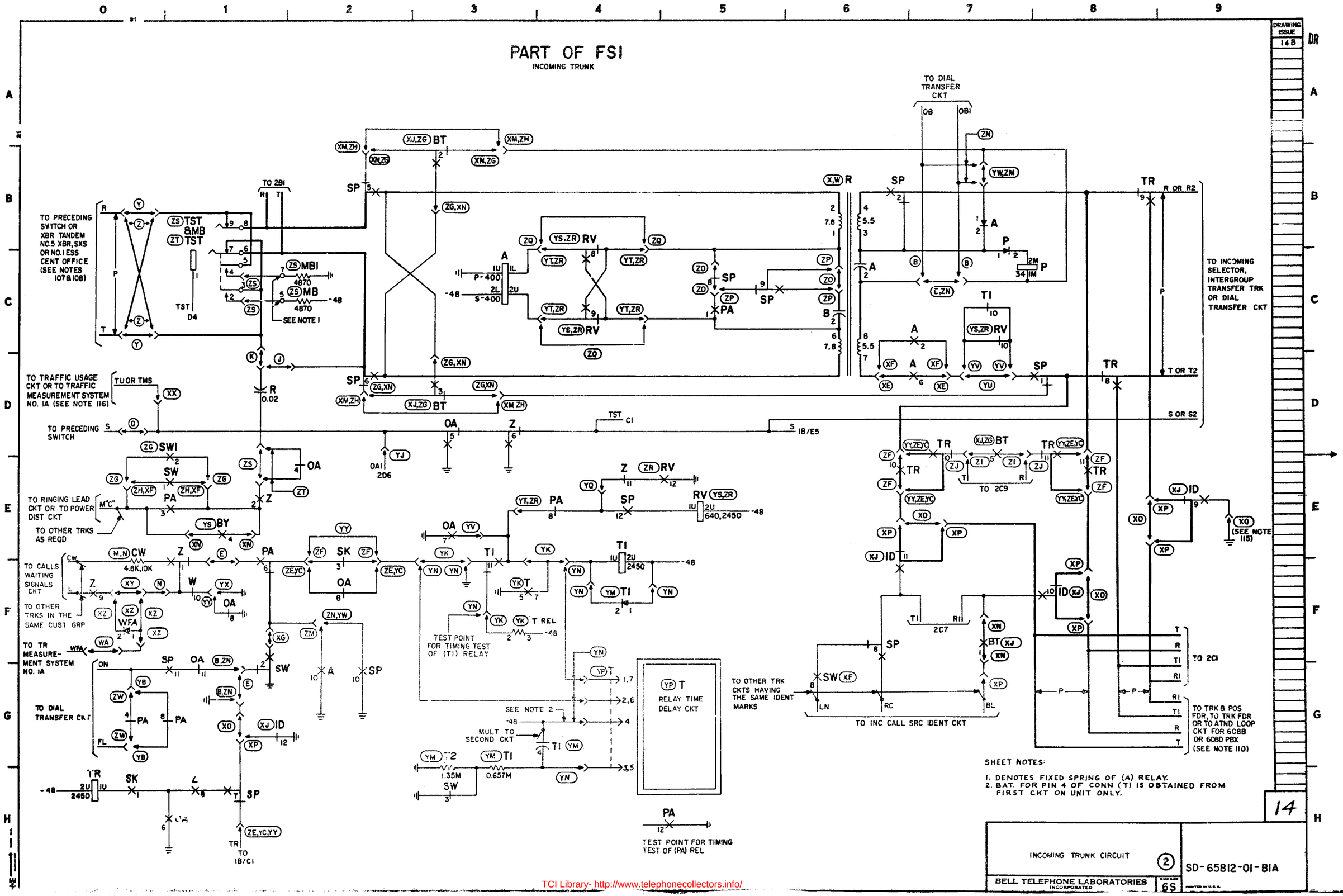

TCI Library- http://www.telephonecollectors.info/

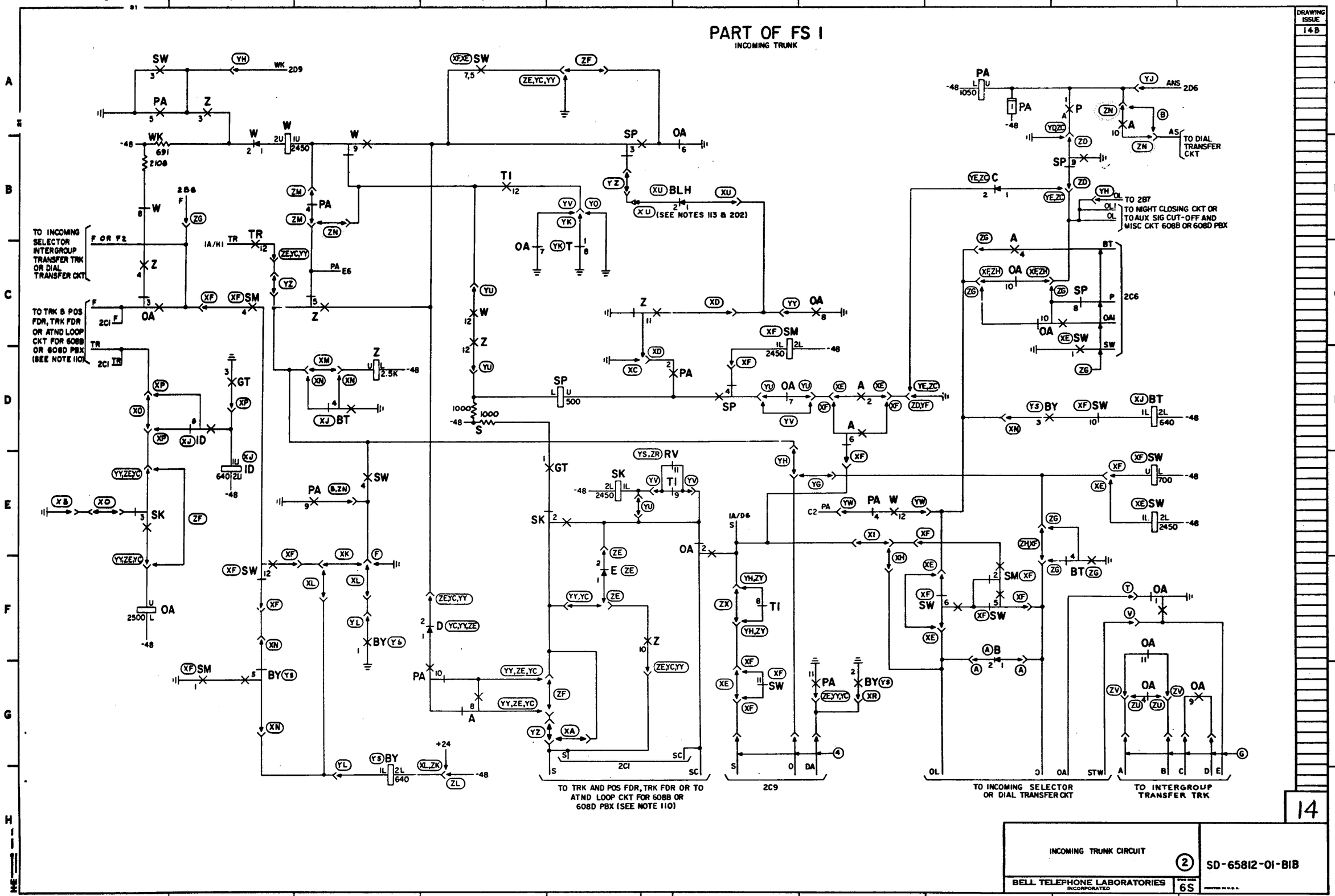

SD-65812-01-B1B

TCI Library- http://www.telephonecollectors.info/

FS 2
TEST CIRCUIT FOR TESTING ATTENDANT LOOP CIRCUIT FOR 608B OR 608D PBX (SEE NOTES 1 & 2)

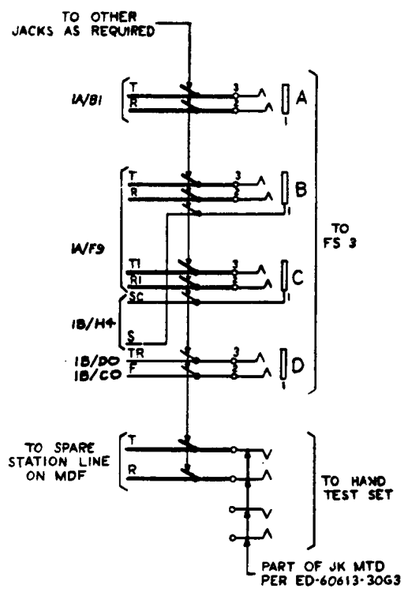

FS 3
PATCHING CORDS FOR TEST CIRCUIT (SEE NOTES 1 & 2)

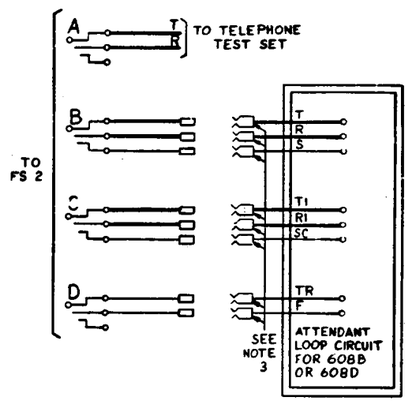

(2G) FS 4
BUSY LINE TRANSFER

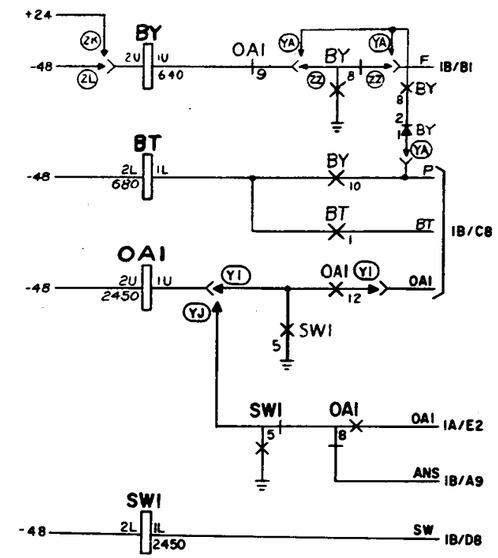

(4) FS 5
DA TRANSFER

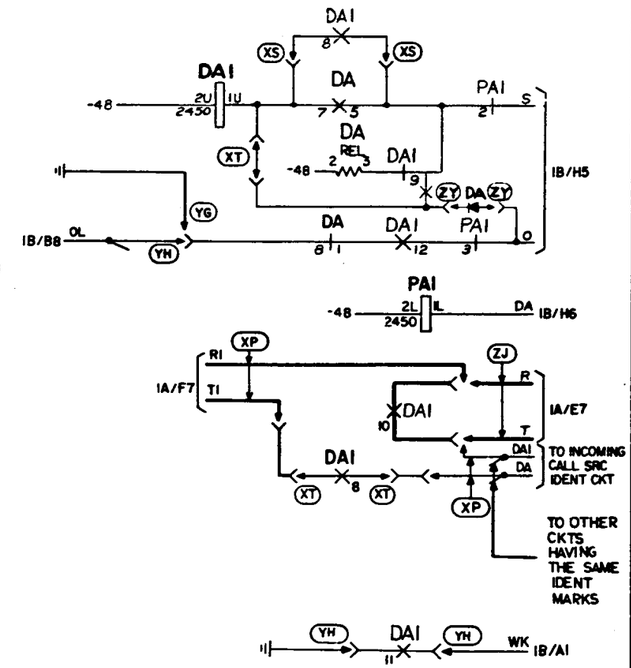

PART OF FS I
INCOMING TRUNK

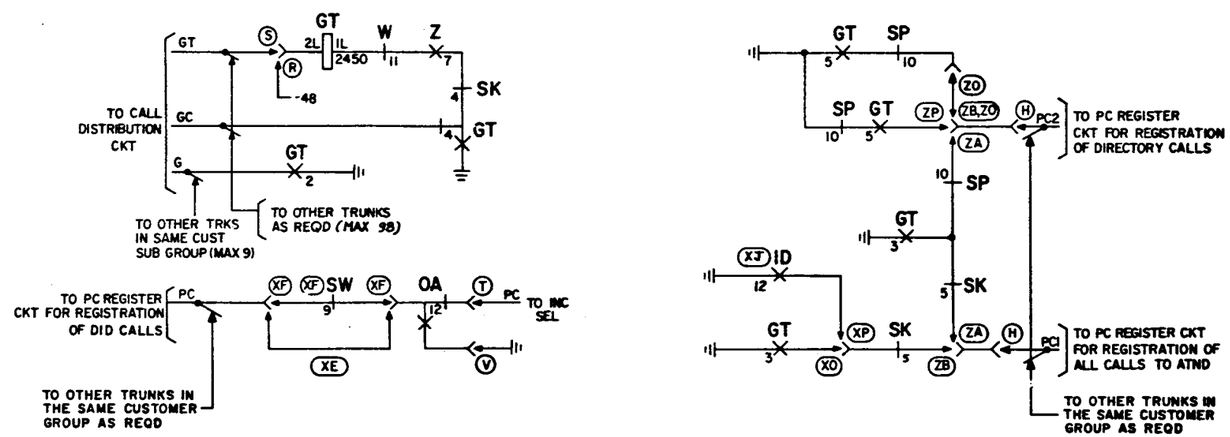

SHEET NOTES:

1. THE JACK MOUNTING FOR THE TEST CIRCUIT SHOULD BE MOUNTED ON THE RELAY RACKS ASSOCIATED WITH THE ATTENDANT LOOP CIRCUIT.
2. THE INCOMING TRUNK WIRED TO THE TEST CIRCUIT SHOULD BE CHOSEN AS TO ITS AVAILABILITY FOR TEST PURPOSES AND SHOULD NOT BE THE FIRST OR LAST TRUNK OF A GROUP OF TRUNKS.
3. THE 624B TOOLS ARE REQUIRED TO ADAPT THE 360 TOOLS OF THE PATCHING CORDS TO THE SQUARE TERMINALS ON THE TERMINAL STRI. OF THE ATTENDANT LOOP.

DRAWING ISSUE: 5B, 7B, 10AC, 11D, 12AC, 13AC, 14B

14

INCOMING TRUNK CIRCUIT (2) SD-65812-01-B2

BELL TELEPHONE LABORATORIES INCORPORATED 6S

SD-65812-01-B2

TCI Library- http://www.telephonecollectors.info/

APP FIG I

RELAY

DESIG	A		BT	1D	BT	OA1	BY	RV	BY	SW1
CODE	AJ52		AK22		AK35		AK30		AK27	
OPTION			XJ		ZG		YS		ZG	
CONT ARR / LOC										
12				EBM a		M 2C6		M	M	
11				EBM 1A/E6		EBM		EBM 1B/E5	M	
10	M a			EBM 1A/F8		EBM		EBM 1A/C7	M 2B6	
9				EMB 1A/E9		EMB 2B6		EMB 1A/C4		
8	EMB 1B/G3			EMB 1B/D1		EMB 2D6		EMB 1A/B4	EMB 2B6	
7										
6	EMB b									
5			EMB 1A/E7		EMB 1A/E7		EMB 1B/G1			EMB a
4	EBM 1B/C7		EMB 1B/D2		EMB 1B/F8		EMB 1A/E1			B
3			EBM 1A/D3		EBM 1A/D3		EBM 1B/D8			
2	M c		EBM 1A/F3		EBM 1A/B3		EBM 1B/C6			M 1A/E1
1			EBM 1A/F7		M 2C6		M 1B/F2			EB
COIL	1A/C3		1B/D8	1B/E1	2B5	2C5	1B/H2	1A/E5	2B5	2D5

a (ZM) 1A/G2 (ZN) 1B/A8

b (XF) 1B/D8 (XE) 1A/D7

c (XF) 1A/C7 (XE) 1B/D6

a 1A/G1 2G6

a (YI) 2C6 (YJ) 2D6

RELAY

DESIG	GT	W	OA	PA
CODE	AK4		AJ83	AG7
OPTION				
CONT ARR / LOC				
12		M a	EBM 2G5	M 1A/H5
11		EBM 2F4	EBM f	M 1B/G6
10		EBM 1A/F1	EBM d	EBM 1B/G3
9		EMB 1B/B2	EBM 1B/G9	M 1B/E2
8		EMB 1B/B0	EMB a	EBM a
7			EBM b	
6			EMB c	EBM 1A/F1
5	EMB b		EMB 1A/D3	M 1B/A0
4	EMB 2F5		EBM e	EBM b
3	EBM a		EBM 1B/C0	M 1A/E1
2	EBM 2F4		EBM 1B/E5	M 1B/D5
1	M 1B/E4		EBM 1B/F8	M 1A/C5
COIL	2F4	1B/B1	1B/F0	1B/A7

a (ZA) 2G7 (XP) 1B/D1 (XO) 2G6

b (ZB, ZO) 2F6 (ZP) 2F7

a (YU) 1B/C3 (YW) 1B/E6

a (YC, ZE) 1A/F2 (YY) 1A/F1 1B/C6

b (YV) 1B/C3 1A/E3 (YU) 1B/D5

c 1A/H1 1B/B5

d (XF, ZH) 1B/C7 (ZG) 1B/C8

e (ZT) 1A/E2 (ZU) 1B/G8

f (B, ZN) 1A/F1 (ZV) 1B/F8

a (YB) 1A/G1 (YT, ZR) 1A/E4

(YW) 1B/E6

b (ZW) 1A/G0

(ZM) 1B/B2

RELAY

B203

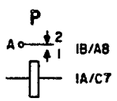

RELAY

KS-16615, L11

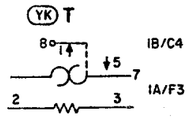

CAPACITOR

DESIG	LOC	CODE
A	1A/C6	439B
[1] B	1A/C6	439B
[1] R	1A/D1	
(YM) T1	1A/G4	542G

RELAY

DESIG	SK	TR	SM	T1	SP	SW
CODE	AK4		AK4		AJ43	AJ15
OPTION			XF			XF
CONT ARR / LOC						
12		M 1B/C1		M 1B/B3	EBM 1A/E4	EBM 1B/F1
11		EBM a		EBM 1A/F3	EBM 1A/F1	EBM 1B/G5
10		EBM b		EBM 1A/C7	EBM c	EBM 1B/D8
9		EMB 1A/B8		EMB 1B/E5	EBM b	EBM 2G4
8		EMB 1A/D8		EMB 1B/F5	EMB a	EMB 1A/G6
7					EBM 1A/H1	EBM 1B/A3
6					EMB 1A/D2	EMB 1B/F7
5	EMB 2G7		EMB		EMB 1A/B2	EMB 1B/F7
4	EMB 2F5		EMB 1B/C1		EBM 1B/D5	EBM 1B/E2
3	EBM a		EBM		EBM 1B/B4	EBM a
2	EBM 1B/E4		EBM 1B/F7		EBM 1A/B6	EBM 1A/G1
1	M 1A/H0		M 1B/G1		EBM 1A/D8	EBM 1A/E1
COIL	1B/E4	1A/G0	1B/C5	1A/F4	1B/D4	1B/E8

a (ZF) 1A/F2 (YC, YY, ZE) 1B/E0

a (ZF) 1A/E8 (YC, YY, ZE) 1A/E8

b (YC, YY, ZE) 1A/E7 (ZF) 1A/E6

(ZO) 1A/C5

a (XP) 1A/F6 (ZG) 1B/C8

(ZP) 1A/C5

b (ZD) 1B/B8

(YW, ZN) 1A/G2

(ZB, ZO) 2F7

c (ZP) 2F6 (ZA) 2F7

a 1A/H3 1B/A0

DIODES

DESIG	LOC	CODE
(XV) A	1A/B7	420G
(XW) A	1A/B7	446F
(A) B	1B/F7	420G
(XU) BLH	1B/B5	446F
(YE, ZC) C	1B/B7	420G
(YC, ZE) D	1B/F3	420G
(YY) D	1B/F3	446F
(ZE) E	1B/F4	420G
(XV) P	1A/C7	420G
(XW) P	1A/C7	446F
(YM) T1	1A/F4	446F
(XV) W	1B/B1	420G
(XW) W	1B/B1	446F
(YA) BY	2B6	446F
(XZ) WFA	1A/F0	446F

JACK

DESIG	LOC	CODE
(ZS) TST & MB	1A/C1	290B
(ZT) TST	1A/C1	290B

NETWORK

DESIG	LOC	CODE
PA	1B/A7	186A

RELAY

DESIG	SW	T1	RV	Z
CODE	AK4		AK4	AJ83
OPTION	XE		ZR	
CONT ARR / LOC				
12		M 1B/B3	M 1A/E5	EBM 1B/C3
11		EPM 1A/F3	EBM 1B/E5	EBM c
10		EPM 1A/C7	EPM 1A/C7	EBM 1B/F4
9		EMB 1B/E5	EMB 1A/C4	EBM 1A/F0
8		EMB 1B/F5	EMB 1A/B4	EMB 1A/H1
7				EBM 2F5
6				EMB 1A/D3
5	EMB 1B/A3		EMB	EMB 1B/C2
4	EMB 1B/E2		EMB	EBM 1B/C0
3	EPM b		EBM	EBM 1B/A1
2	EPM 1A/G1		EPM	EBM 1A/E1
1	M a		M	EBM 1A/E1
COIL	1B/E8	1A/F4	1A/E5	1B/D2

(ZH) 1A/E1

a (ZG) 1B/C8

b 1A/H3 1B/A0

(YQ) 1A/E4

a (XD) 1B/C4

RESISTOR

DESIG	LOC	CODE
(M) CW	1A/F0	18KB
(N) CW	1A/F0	18KF
(ZS) MB	1A/C2	146C, 4870
(ZS) MBI	1A/C2	146C, 4870
S	1B/D3	19BM
(YM) T1	1A/G3	144A, 0.657 MEG
(YM) T2	1A/G3	144A, 1.35 MEG
WK	1B/B0	19WR

TRANSFORMER (SEE NOTE 105)

DESIG	LOC	CODE
(X) R	1A/B6	120C REP COIL
(W) R	1A/B6	120CS REP COIL

DRAWING ISSUE 14B

14

INCOMING TRUNK CIRCUIT

BELL TELEPHONE LABORATORIES INCORPORATED

6S

SD-65812-01-C1

SD-65812-01-C1

TCI Library- http://www.telephonecollectors.info/

APP FIG 2

JACKS DESIG	LOC	CODE
A	2B1	238A
B	2B1	238A
C	2C1	238A
D	2C1	238A

MOUNTING DESIG	LOC	CODE
JACK MOUNTING	2D1	ED-60613-30G3

APP FIG 3

CORDS DESIG	LOC	CODE
A	2B3	2W42A
B	2B3	3W4A E/W 624B TOOL
C	2C3	3W4A E/W 624B TOOL
D	2C3	2W17A E/W 624B TOOL

APP FIG 4

RELAY DESIG									PA1		DA1														DESIG
CODE									AK4																CODE
OPTION																									OPTION
	CONT ARR	LOC	CONT ARR	LOC	CONT ARR	LOC	CONT ARR	LOC	CONT ARR	LOC	CONT ARR	LOC	CONT ARR	LOC	CONT ARR	LOC	CONT ARR	LOC	CONT ARR	LOC	CONT ARR	LOC	CONT ARR	LOC	
12											M	2B8													12
11											EBM	2D8													11
10											EBM	2C8													10
9											EM5	2B8													9
8											EM5	a													8
7																									7
6																									6
5									EM5																5
4									EM5																4
3									EBM	2B9															3
2									EBM	2B9															2
1									M																1
COIL										2C8		2B8													COIL

a (XS) 2A8
(XT) 2D8

RELAY
KS-16615-L8
DA

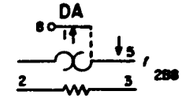

DIODE DESIG	LOC	CODE
(ZY) DA	2B9	446F

APP FIG 5

CONNECTOR

	DESIG	LOC	CODE
(YP)	T	1A/G4	910A

RELAY DELAY TIMER UNIT (SEE NOTE 201)

	DESIG	LOC	CODE
(YP)	T	1A/G5	ED-99555-( )

DRAWING ISSUE 14-B

14

INCOMING TRUNK CIRCUIT (2)

SD-65812-01-C2

BELL TELEPHONE LABORATORIES INCORPORATED 6S

SD-65812-01-C2

TCI Library- http://www.telephonecollectors.info/

CIRCUIT NOTES:

101.

DESIG	FUSE AMP	POTENTIAL	ONE PER
	1-1/3	-48V	APP FIG. 1 Z OR Y OPT & 4 APP FIG. 4
	1-1/3	+24V	2 APP FIG. 1

BATTERY SYMBOL	VOLTAGE RANGE
-48	44-52V

102.

FEATURE OR OPTION			PROVIDE APP FIG	PROVIDE APP OR WRG	PROVIDE QUANTITY
INCOMING TRUNK			1		1 PER CKT
			5		1 PER 2 CKT
TYPE OF TRANSFER ARRANGEMENTS PROVIDED	DIAL TRANSFER SEE NOTE 109			ZN, ZW	
	ATND RECALL			E, YW	
INTERGROUP TRANSFER REQD SEE NOTE 109				G, ZV	
TRUNK CONNECT BETWEEN 1ST AND 2ND SELECTORS				Q	
TYPE OF SERVING OFFICE	STEP-BY-STEP	WITH 608 SWITCHBOARD PROVIDED		XI,XL	
		WITH CONSOLE PROVIDED AND LAMP REPEATING IS PROVIDED		XI,XL	
		WITH CONSOLE PROVIDED AND LAMP REPEATING IS NOT PROVIDED		XI, XK	
	CROSSBAR HAVING LISTED NUMBER DIGIT TRANSLATION (SINGLE DIGIT SENT)	PROVIDED		F, XH	
		NOT PROVIDED		XG, XH	
BUSY LINE TRANSFER	NOT PROVIDED			XM	
	PROVIDED SEE NOTE 113	WITH 608 SWBD OR LAMP REPEATING PROVIDED		XJ XN, XR, ZK	
		WITH 608 SWBD OR LAMP REPEATING NOT PROVIDED		XJ XN, XR, ZL	
	120 IPM VISUAL INDICATION REQD FOR ATND			ZI	
DON'T ANSWR TRANSFER	PROVIDED		4	YH	1 PER CKT
	120 IPM VISUAL INDICATION REQUIRED FOR ATND SEE NOTE 114			ZJ	
ATND LOOP CKTS FOR	608 SWITCHBOARD PROVIDED PER	ISS 7 OR PRIOR OF SD-65830-01		YZ	
		ISS 8 OR LATER OF SD-65830-01		XA	
	CONSOLE PROVIDED PER	ISS 11 OR PRIOR OF SD-65813-01		YZ	
		ISS 12 OR LATER OF SD-65813-01		XA, XB	
INCOMING CALL IDENTIFICATION	NOT PROVIDED			XO	
	PROVIDED SEE NOTE 115			XP,XQ XJ	
TRAFFIC USAGE RECORDER SEE NOTE 116				XX	
TEST CKT FOR TESTING ATND LOOPS FOR 608 SWITCHBOARD			2,3		1 PER INSTALLATION
IF TEST CKT IS NOT ACCESSIBLE TO ALL ATND LOOPS			2		AS REQD
TRAFFIC MEASUREMENT SYSTEM NO. 1A	TRUNK BUSY SEE NOTE 116			XX	
	ATND WAITING TIME			WA	

102. (CONT)

FEATURE OR OPTION	PROVIDE FIG	PROVIDE APP OR WRG	PROVIDE QUANTITY

103.

NETWORK NO.	NETWORK CODE	RESISTANCE IN OHMS	CAPACITANCE IN UF
1	186A	120	0.30

104.

CHANGED ON ISS	IF JOB RECORDS DO NOT SPECIFY	THIS OPTION WAS FURN	SEE NOTE	USE IN CIRCUIT STD	A & M	MD	
3B				T		V	
3B	Q	Z OR Y AND Q	102,106 107,108	Q,Y		Z	
3B	R OR S	R	102	R,S			
3B	M OR N	M		N		M	
3B	J OR K	K		J		K	
3B	H	NONE		H			
3B	G	NONE	102,109	E,B,G			
3B	F	NONE	102	F			
4B	E OR P	E	102	E		B	
4B	A	NONE		A			
4B	ZA OR ZB	ZA		ZB		ZA	
6AC	ZC OR ZD	ZD		ZC		ZD	
7B	ZE OR ZF	ZF		ZE		ZF	
7B	ZG OR ZH	ZH	102	ZG,ZH			
7B	ZI OR ZJ	NONE	102,114	ZI,ZJ			
7B	FIG. 4	NONE	102	4			
7B	ZK OR ZL	NONE	102	ZK,ZL			
7B	ZM OR ZN	B, E OR ZW	102	ZM,ZN		B	
8B	ZO OR ZP	ZO		ZP		ZO	
10AC	ZQ OR ZR	ZQ	102	ZQ,ZR			
10AC	ZS OR ZT	ZS		ZT		ZS	
10AC	ZU OR ZV	ZU	102	ZV		ZU	
10AC	ZW OR YB	YB	102	ZW		YB	
10AC	ZX OR ZY	ZX	102	ZY		ZX	
10AC	ZZ OR YA	AA	102	YA		ZZ	
10AC	YC	ZE		YC		ZE	
12AC	YD, YE OR YF	ZD OR ZC	102	YD,YE YF		ZC	
12AC	YG OR YH	ZY,YG	102	YH		ZY,YG	
13AC	YL OR YJ	ZG OR ZH	102	YJ		YI	
14B	YK,YM, YO OR YP	YK	102, 111	YM,YN, YP	YO	YK	
14B	YQ	YQ				YQ	
14B	ZQ,ZR,YS OR YT	ZQ OR ZR	112	YS,YT	ZR	ZQ	
14B	YU OR YV	YU		YV		YU	
14B	YE OR YF	YE OR YF		YF		YE	
14B	YW	ZM OR ZN	102	YW		ZM	
14B	YC,YX,YY YZ,XA,XB	YC & YX	102	YY,YZ, XA,XB		YC,YX	
14B	XC OR XD	XC		XD		XC	
14B	A,XE OR XF	A AND XE		XF		A, XE	
14B	XG	XG	102	XG			
14B	XH OR XI	NONE	102	XH,XI			
14B	XL,XK OR YL	NONE	102	XK,XL, YL			
14B	YA	YA OR NONE				YA	
14B	YJ	YI,JY OR NONE				YJ	
14B	XJ	ZG OR NONE	102	XJ			

104. (CONT)

CHANGED ON ISS	IF JOB RECORDS DO NOT SPECIFY	THIS OPTION WAS FURN	SEE NOTE	USE IN CIRCUIT STD	A & M	MD	
14B	ZH,ZG,XM OR XN	ZH OR ZG	102	XM,XN		ZH,ZG	
14B	XO OR XP	XO	102	XO,XP			
14B	XQ	NONE	102,115	XQ			
14B	XR	NONE	102	XR			
14B	XS OR XT	XS		XT		XS	
14B	XU	NONE	113,202	XU			
14B	R OR S	R OR S		R		S	
14B	XV OR XW	XV		XW		XV	
14B	XX	NONE	102,116	XX			
14B	XY,XZ OR WA	XY	102	XZ,WA		XY	

WORKING LIMITS
MAX EXT CKT LOOP RES-2000
MAX INS RES -15,000

DRAWING ISSUE 14B

14

INCOMING TRUNK CIRCUIT (2) SD-65812-01-DI

BELL TELEPHONE LABORATORIES INCORPORATED SHEET 6S

SD-65812-01-DI

TCI Library- http://www.telephonecollectors.info/

CIRCUIT NOTES (CONT):

105. USE OPTION W ONLY IF REQUIRED BY GOVERNMENT RESTRICTIONS ON OPTION X.

106. PRIOR TO ISSUE 3B, OPTION Q WAS PART OF OPTION Y.

107. WHEN THIS TRUNK IS CONNECTED TO A CROSSBAR TANDEM OFFICE THE T&R ARE TO BE REVERSED IN THE CO OR AT THE PBX.

108. PRIOR TO ISSUE 3B, WHEN THIS TRUNK WAS CONNECTED TO A CROSSBAR TANDEM OFFICE THE T&R WERE REVERSED AT THE PBX.

109. DIAL TRANSFER CIRCUIT AND INTERGROUP TRANSFER CIRCUIT MAY NOT BE PROVIDED SIMULTANEOUSLY.

110. WITH SINGLE POSITION SINGLE CORD OPERATION OF THE 608B OR 608D PBX, THIS TRUNK CAN BE CONNECTED DIRECTLY TO THE 608B OR 608D PBX ATND LOOP CKT.

(A&M ONLY) 111. PROVIDE OPTION YO IF OPTION YV IS NOT PROVIDED.

112. OPTION ZR IS RETAINED FOR FIELD APPLICATION ONLY, TO BE USED IN PLACE OF OPTIONS YS AND YT IF OPTION ZR WAS PROVIDED AND OPTION XP IS NOT REQUIRED.

113. PROVIDE OPTION XU WITH OPTION XN IF OPTION YZ IS PROVIDED.

114. OPTION ZJ CANNOT BE PROVIDED IF OPTION XP IS PROVIDED.

115. IF ATND LOOP CKTS FOR CONSOLES ARE PROVIDED PER ISSUE 12 OR LATER OF SD-65813-01 AND OPTION XP IS SPECIFIED PROVIDE XQ IN PLACE OF OPTION XB.

116. WHEN OPTION XX IS PROVIDED AND THIS CIRCUIT IS TAKEN OUT OF SERVICE DURING A TRAFFIC STUDY BY PLACING A GROUND ON LEAD S, A RECORD OF HOW LONG THE TRUNK WAS OUT OF SERVICE SHOULD BE SENT TO THE DEPARTMENT MAKING THE STUDY.

EQUIPMENT NOTES:

201. PROVIDE UNIT ED-99555 DASH NO. AND GROUP ASSEMBLY WHICH PROVIDES TWO CIRCUITS PER UNIT WITH EACH CONSISTING OF AN INTERNAL 2 UF CAPACITOR.

202. THE 446F DIODE (OPTION XU) SHALL BE PROVIDED AND INSTALLED BY THE INSTALLER ON A JOB BASIS.

INFORMATION NOTES:

301. UNLESS OTHERWISE SPECIFIED: RESISTANCE VALUES ARE IN OHMS, CAPACITANCE VALUES ARE IN MICROFARADS, AND VALUES PRECEDED BY THE SYMBOL +(PLUS) OR -(MINUS) ARE IN VOLTS.

TRANSMISSION TEST REQUIREMENTS
(1000 CYCLE LOSS BETWEEN 600 OHM LINES)

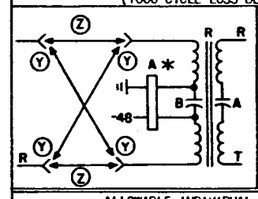

MAX ALLOWABLE CKT LOSS (db)	
OPTION X	0.4
OPTION W	1.1

ALLOWABLE INDIVIDUAL APPARATUS LOSSES (db)

APPARATUS	DESIG	CODE	MAX LOSS	MIN LOSS	REMARKS
CAPACITOR	A,B	2UF	13.7	11.7	
REP COIL	R	120C	0.4	0.2	OPTION X +
REP COIL	R	120CS	1.1	0.5	OPTION W +

+ SEE NOTE 105.

* INDICATES APPARATUS FOR WHICH INDIVIDUAL LOSSES ARE NOT REQD

DRAWING ISSUE 14B

14

INCOMING TRUNK CIRCUIT (2)

SD-65812-01-D2

BELL TELEPHONE LABORATORIES INCORPORATED

6S

SD-65812-01-D2

TCI Library - http://www.telephonecollectors.info/

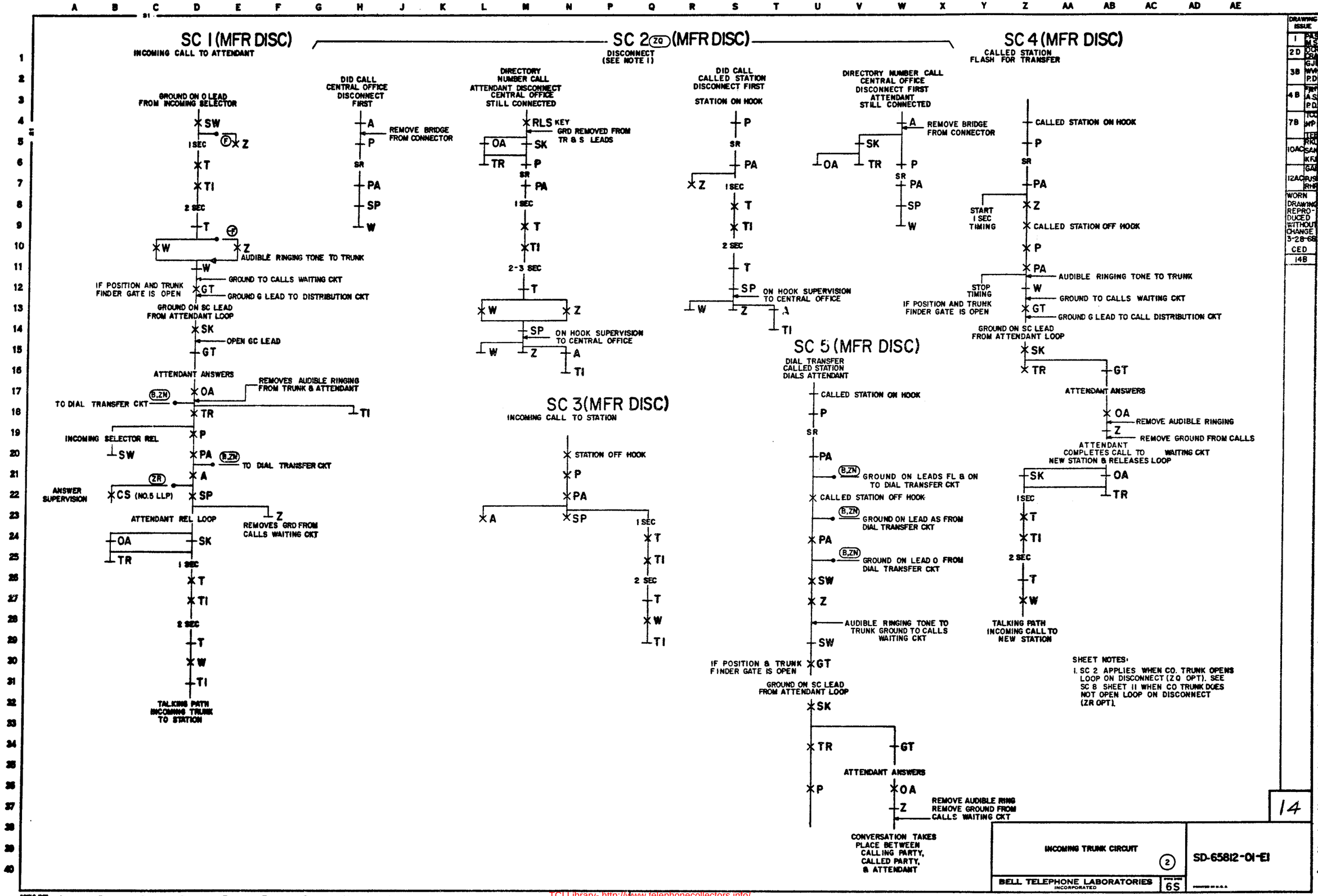

TCI Library http://www.telephonecollectors.info/

SC 6 (MFR DISC)

BUSY LINE TRANSFER

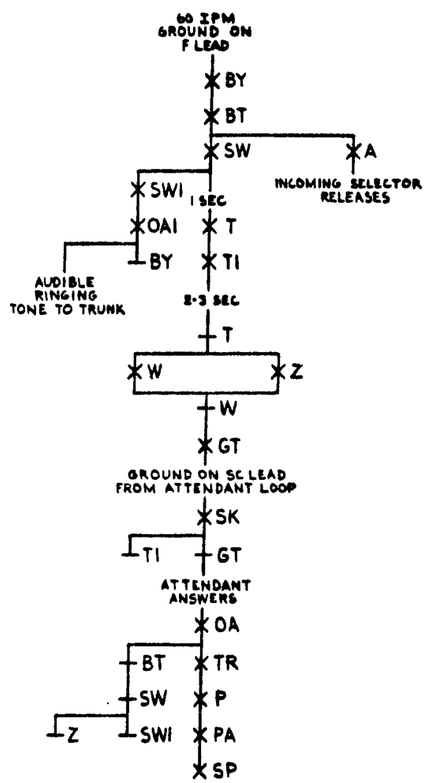

SC 7 (MFR DISC)

DO NOT ANSWER TRANSFER

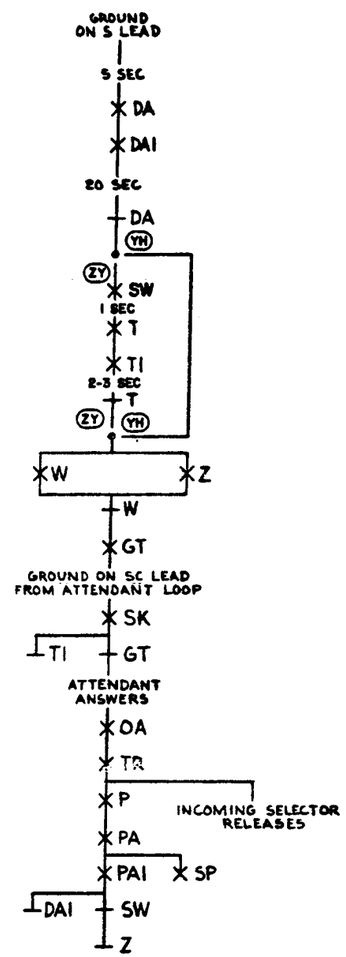

DRAWING ISSUE

7B	A7	
	MTP	
	7ZB	
12AC	GAH	
	P.JS	
	RHF	
14B		

14

INCOMING TRUNK CIRCUIT (2)

SD-65812-01-E2

BELL TELEPHONE LABORATORIES INCORPORATED 6S

SD-65812-01-E2

TCI Library - http://www.telephonecollectors.info/

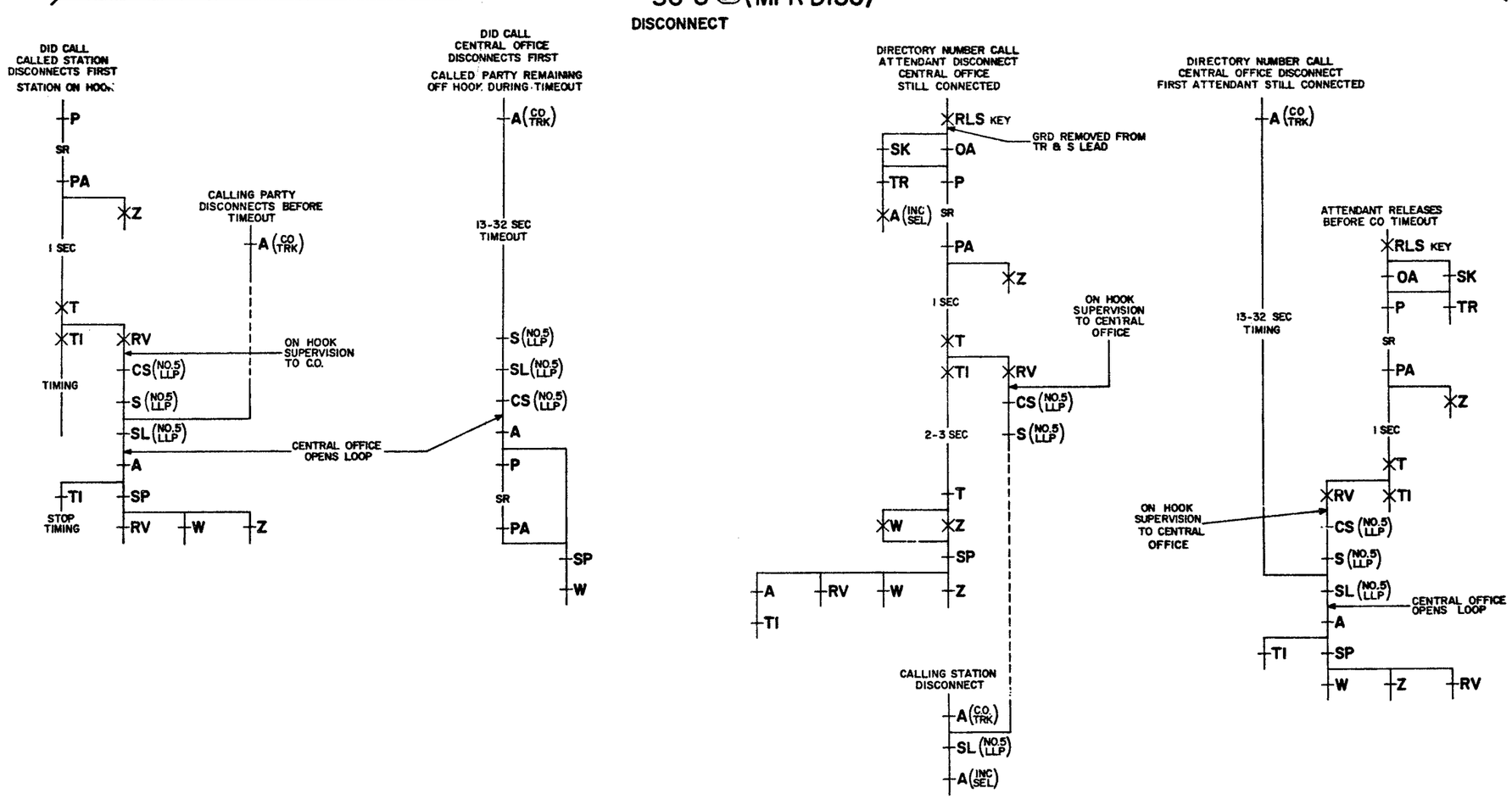

DRAWING ISSUE
10AC SAK HW
RKU
JDJ
12AC PJS
GAH
RHP
14B

14

INCOMING TRUNK CIRCUIT 2

SD-65812-01-E3

BELL TELEPHONE LABORATORIES INCORPORATED

6S

PRINTED IN U.S.A.

SD-65812-01-E3

TCI Library- http://www.telephonecollectors.info/

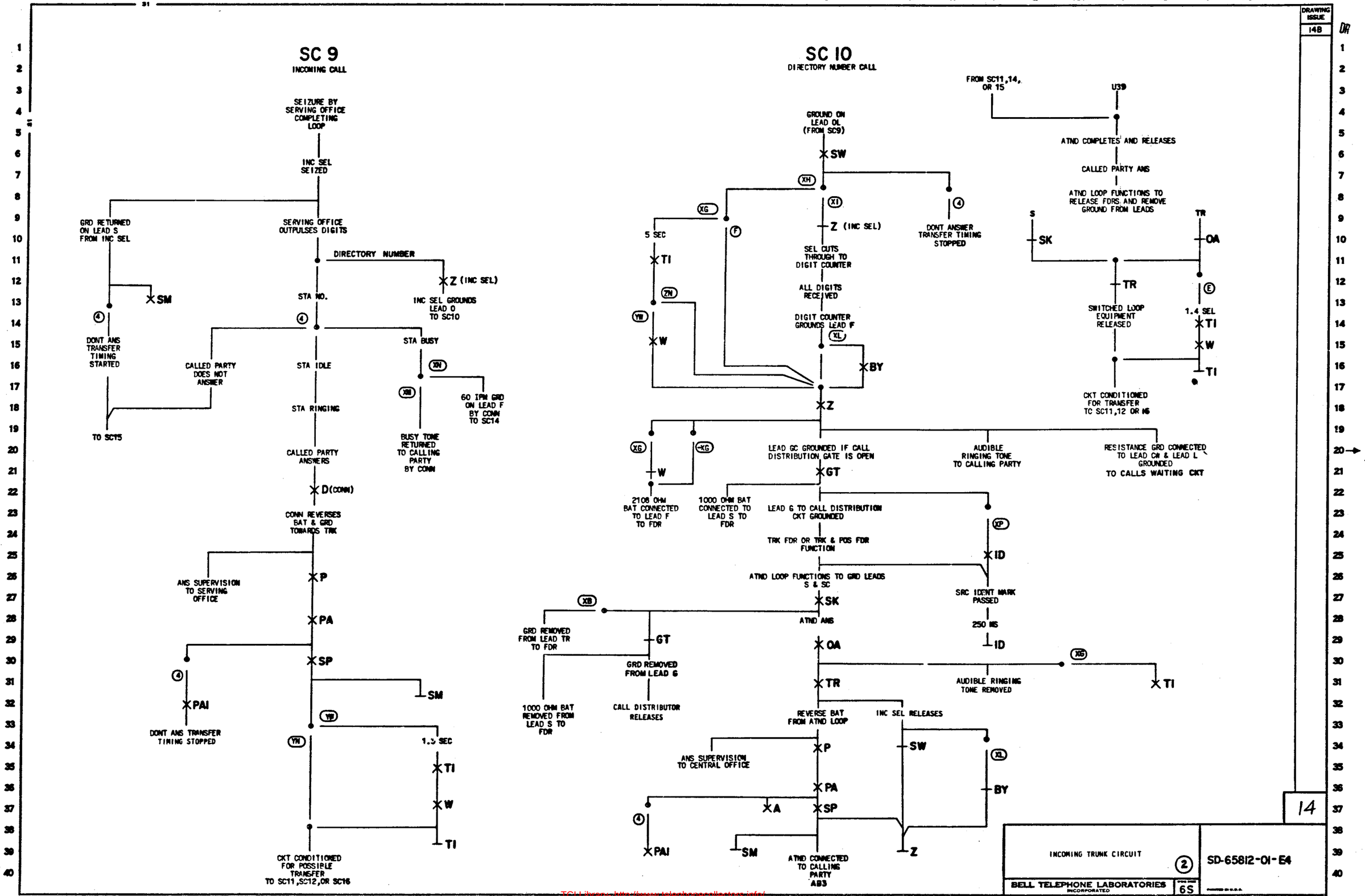

TCI Library - http://www.telephonecollectors.info/

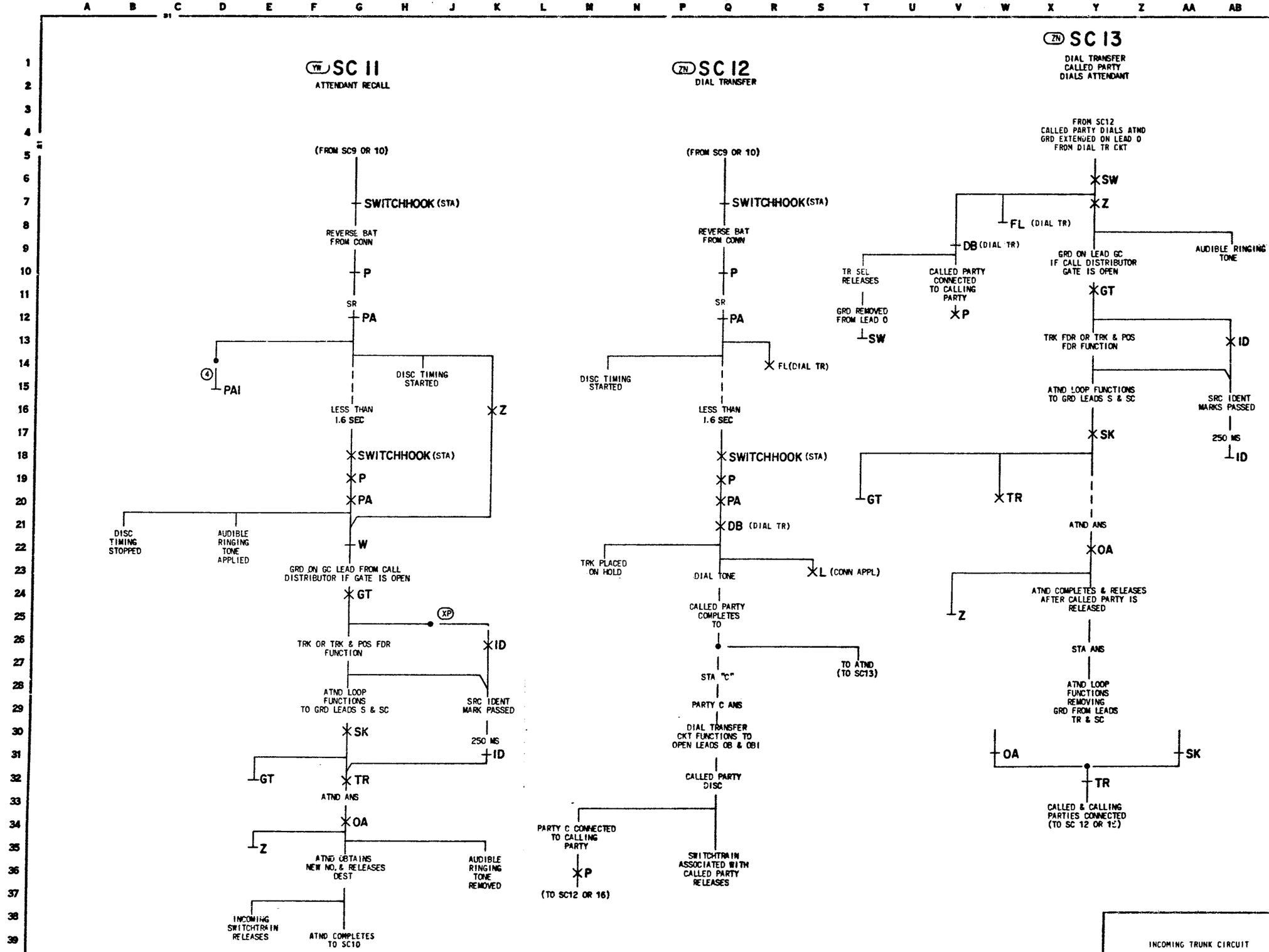

SD-65812-01-E5

TCI Library- http://www.telephonecollectors.info/

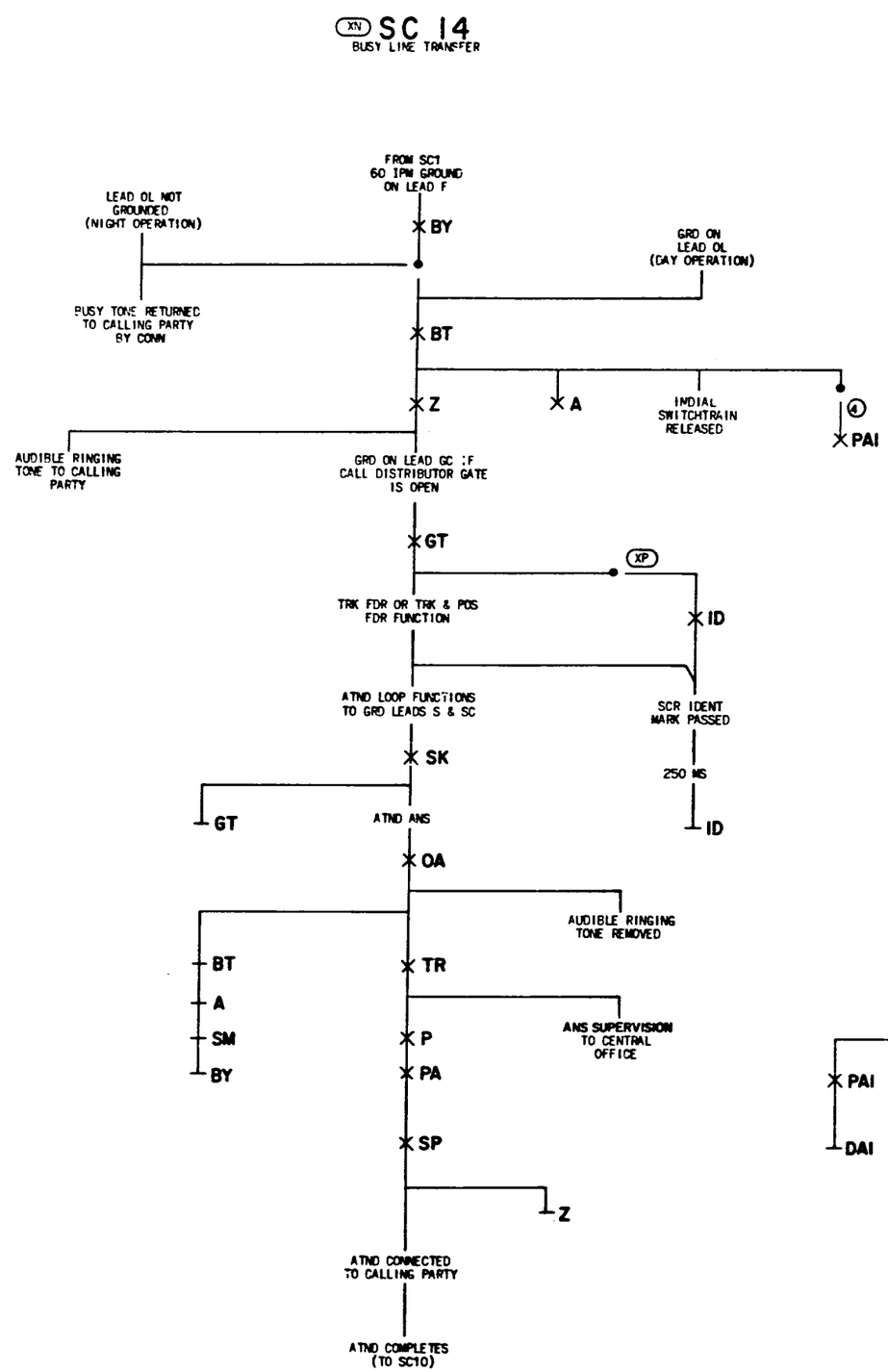

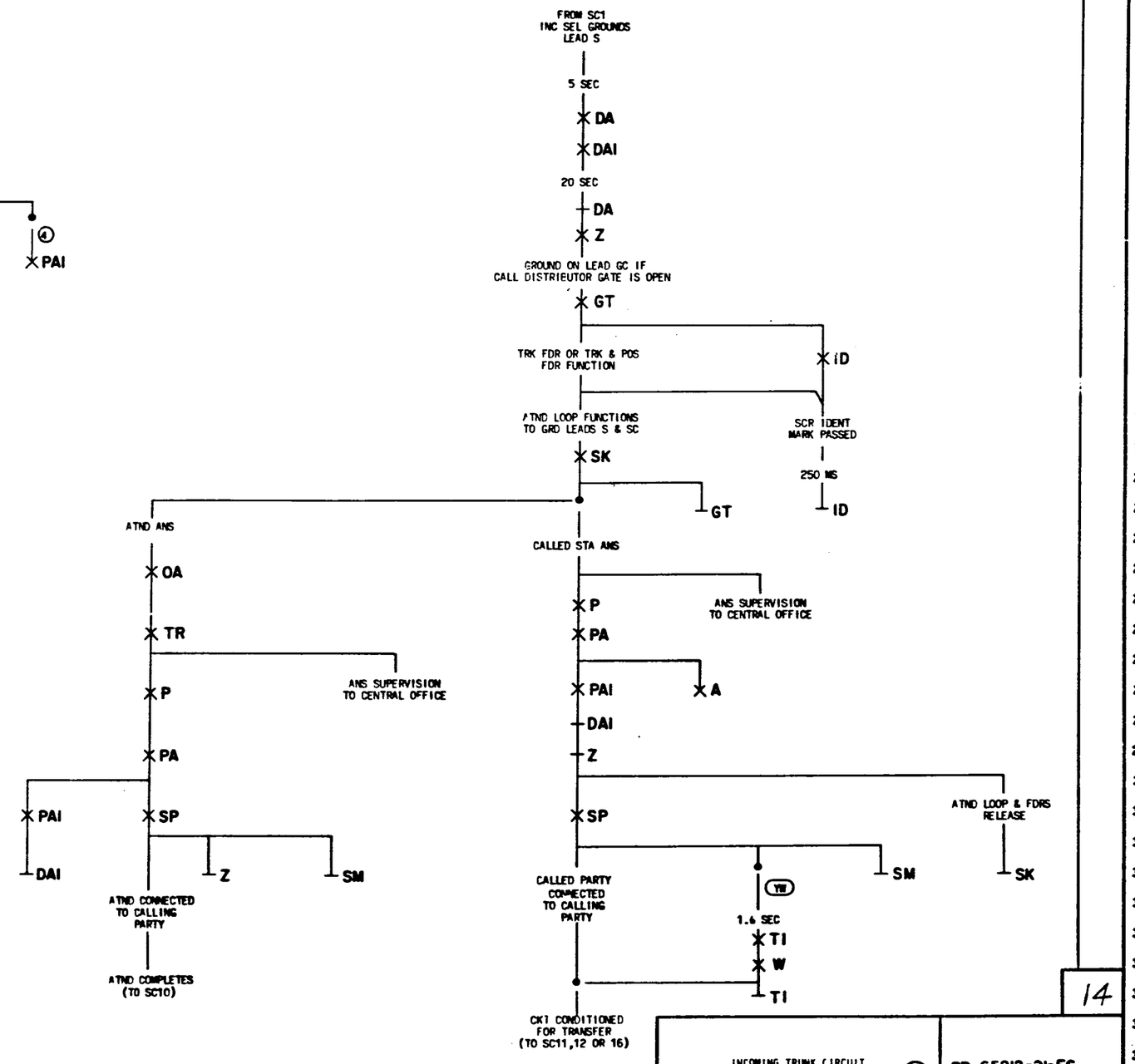

DRAWING ISSUE
14B

14

INCOMING TRUNK CIRCUIT

2

SD-65812-01-E6

BELL TELEPHONE LABORATORIES
INCORPORATED

6S

SD-65812-01

TCI Library- http://www.telephonecollectors.info/

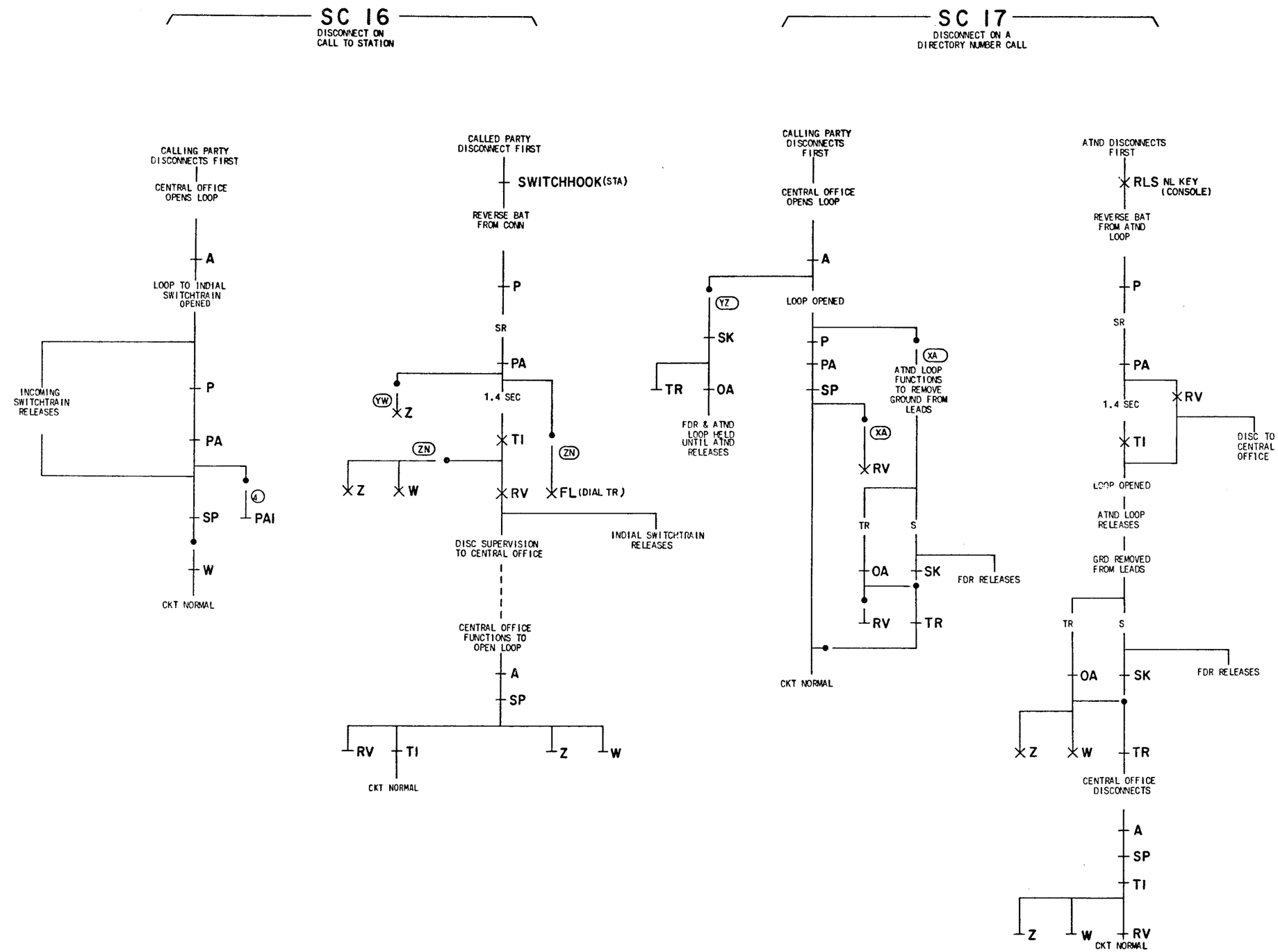

DRAWING ISSUE 14B

14

INCOMING TRUNK CIRCUIT

SD-65812-01-E7

SD-65812-01-E7

TCI Library- http://www.telephonecollectors.info/

SD-65812-01 2 PAGES

CIRCUIT REQUIREMENTS

NO. 701B INCOMING TRUNK CIRCUIT

APPARATUS DESIG	CODE	OPTION	FIG.	MECH REQT BRP FIG	CONT PRESS	ARM TRVL	CIRCUIT PREPARATION BLOCK OR INSULATE	TEST CLIP DATA CONN BAT.	CONN GRD	TEST SET PREP	SEE TEST NOTE	DIRECT CURRENT FLOW REQT TEST WIRE	TEST FOR	AFTER SOAK MA.	TEST MA.	READJ MA.	REMARKS
RELAYS																	
A	AJ52		1	303				1L(A)	2U(A)	M		P/S	O		13.4	12.6	PRI AND SEC IN SERIES AIDING
								1L(A)	2U(A)	M		P/S	R		3.1	3.3	
BT	1/2AK35	ZG	1	202			(SW)NO		1L(BT)	GRD			O	FS	31.5	30	MOUNTED WITH (DA1)
									1L(BT)	GRD			H		4.5	4.2	
BT	1/2AK22	XJ	1	216			(Z) NO		1L(BT)	GRD			O		27.5	26	MOUNTED WITH (ID)
BY	1/2AK27	ZG	1	218			(BT)NO		1U(BY)	GRD			O		20.5	19.5	MOUNTED WITH (SW1)
BY	1/2AK30	YS	1	202			(BT)NO		1L(BY)	GRD			O		23	22	MOUNTED WITH (RV)
DA1	1/2AK4		4	202			(SW)NO		1U(DA1)	GRD			O		11.9	11.3	MOUNTED WITH (PA1)
GT	1/2AK4		1	202			2M(GT)	2L(GT)	1L(GT)	B/G			O		11.9	11.3	MOUNTED WITH (W) S OPTION
							2M(GT)		1L(GT)	GRD			O		11.9	11.3	R OPTION
ID	1/2AK22	XJ	1	216					1U(ID)	GRD			O		27.5	26	MOUNTED WITH (BT)
DA	AJ83		1	249					U(DA)	GRD			O		13.4	12.6	
DA1	1/2AK35	ZG	1	202					1U(DA1)	GRD			O		12.4	11.8	MOUNTED WITH (BT)
P	B203		1	3		30	(PA)NO (TR)O	1M(P)	2M(P)	B/G			O		16	15	SPECIAL ADJUSTMENT ON TEST AND READJ REQUIRED
								1M(P)	2M(P)	B/G			R		6.1	6.5	
PA	AG7		1	241B			3B(SK)		U(PA)	GRD			O	36	17.5	16.5	
									U(PA)	GRD			H	36	3.2	3	
									U(PA)	GRD			R	36	1.6	1.9	
PA1	1/2AK4		4	202					1L(PA1)	GRD			O		11.9	11.3	MOUNTED WITH (DA1)
RV	1/2AK4	ZR	1	202					1U(RV)	GRD			O		11.9	11.3	MOUNTED WITH SPARE REL
RV	1/2AK30	YS	1	202					1U(RV)	GRD			O		23	22	MOUNTED WITH (BY)
SK	1/2AK4		1	202					1L(SK)	GRD			O		11.9	11.3	MOUNTED WITH (TR)
SM	1/2AK4	XF	1	202					1L(SM)	GRD			O		11.9	11.3	MOUNTED WITH (T1)
SP	AJ43		1	249					U(SP)	GRD			O		24.5	23	
SW	AJ15	XF	1	249					U(SW)	GRD			O		42.5	40.5	
SW	1/2AK4	XE	1	202			3B(SK)		1L(SW)	GRD			O		11.9	11.3	MOUNTED WITH (T1)
SW1	1/2AK27	ZG	1	218			(DA1)NO		1L(SW1)	GRD			O		11	10.5	MOUNTED WITH (BY)
T1	1/2AK4	XE,XF	1	202			9B(W)		1U(T1)	GRD			O		11.9	11.3	MOUNTED WITH (SW) OPTION XE MOUNTED WITH (SM) OPTION XF
TR	1/2AK4		1	202					1U(TR)	GRD			O		11.9	11.3	MOUNTED WITH (SK)
W	1/2AK4		1	202			4B(PA)		1U(W)	GRD			O		11.9	11.3	MOUNTED WITH (GT)
Z	AJ83		1	249			4B(PA)		U(Z)	GRD			O		13.4	12.6	

DRAWING ISSUE	
1	
2D	
3B	
5B	
6AC	
7B	
10AC	
12AC	
14B	

PAGE 1

INCOMING TRUNK CIRCUIT

BELL TELEPHONE LABORATORIES INCORPORATED

SD-65812-01-F1

TIMING REQUIREMENTS

APPARATUS DESIG	OPTION	FIG.	CIRCUIT PREPARATION BLOCK OR INSULATE	TEST CLIP DATA CONN BK	CONN R	CONN W	TEST SET PREP SEND KEY	REC SW START	REC SW STOP	SEE NOTE	TIME REQ MIL-SEC MIN	MAX	REMARKS
DA		4								2			
PA		1	3B(SK)	GRD	U(PA)	12(PA)	BK	GRD	O.C.		155	365	
T	XK	1								1			
T1	YN	1	(W)NO (Z)NO	GRD	45(TSB)	25(TSB)	M	GRD	O.C.	3,5	1500	1700	
T1	YN	1	(W)NO (Z)NO 3B(SW)	GRD	45(TSB)	25(TSB)	M	GRD	O.C.	4,5	4700	5200	

TEST NOTES:

1. TO MEASURE TIME OF (T) RELAY, OPERATE (PA) RELAY, (W) RELAY SHOULD OPERATE WITHIN 3 TO 4 SECONDS.
2. TO MEASURE TIME OF (DA) RELAY, GROUND "S" LEAD FROM INCOMING SELECTOR, (SW) RELAY SHOULD OPERATE WITHIN 20 TO 30 SECONDS.
3. REQUIREMENTS FOR DISCONNECT TIMING
4. REQUIREMENTS FOR DIRECTORY NUMBER TIMING WITH OPTION XG.
5. TEST CLIP DATA FOR OPTION YP - A&M ONLY

   1ST CKT ON UNIT
   - CONN BK - GRD
   - CONN R - 2 (T) CONN
   - CONN W - 11B (T1) REL

   2ND CKT ON UNIT
   - CONN BK - GRD
   - CONN R - 6 (T) CONN
   - CONN W - 11B(T1) REL

DRAWING ISSUE	
1	
2D	
3B	
5B	
6AC	
7B	
10AC	
12AC	
14B	

PAGE 2

14

INCOMING TRUNK CIRCUIT (2)

BELL TELEPHONE LABORATORIES INCORPORATED 6S

SD-65812-01-F1

SD-65812-01-F1

TCI Library - http://www.telephonecollectors.info/

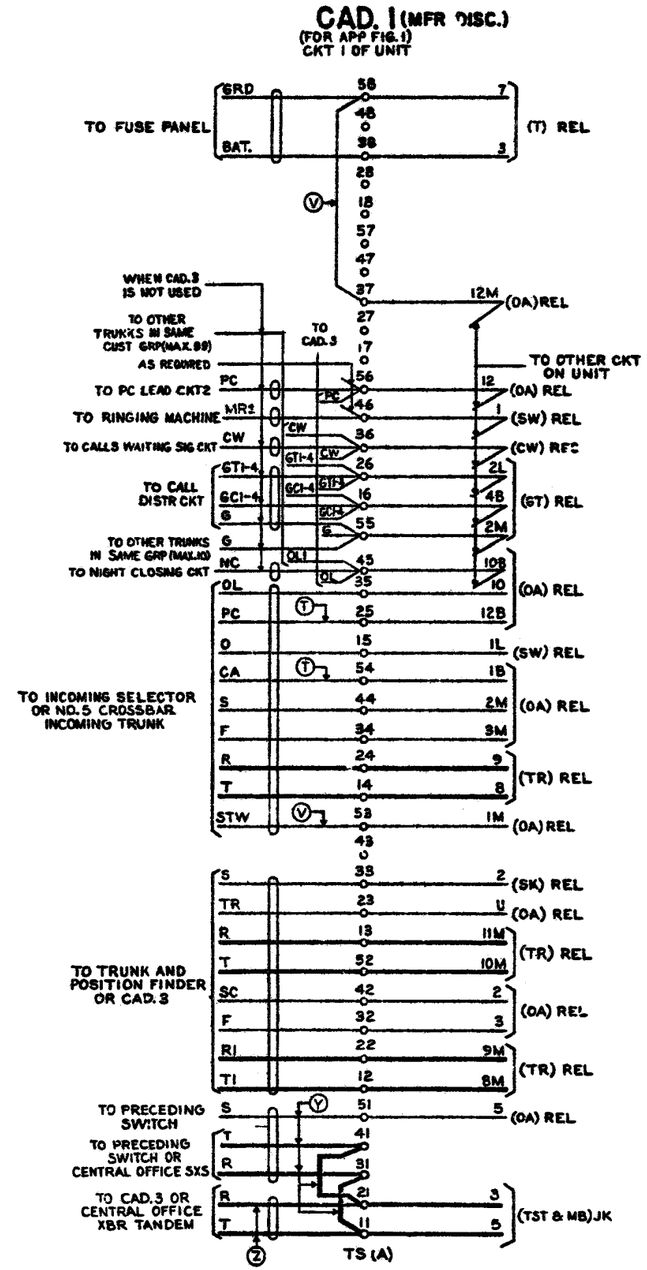

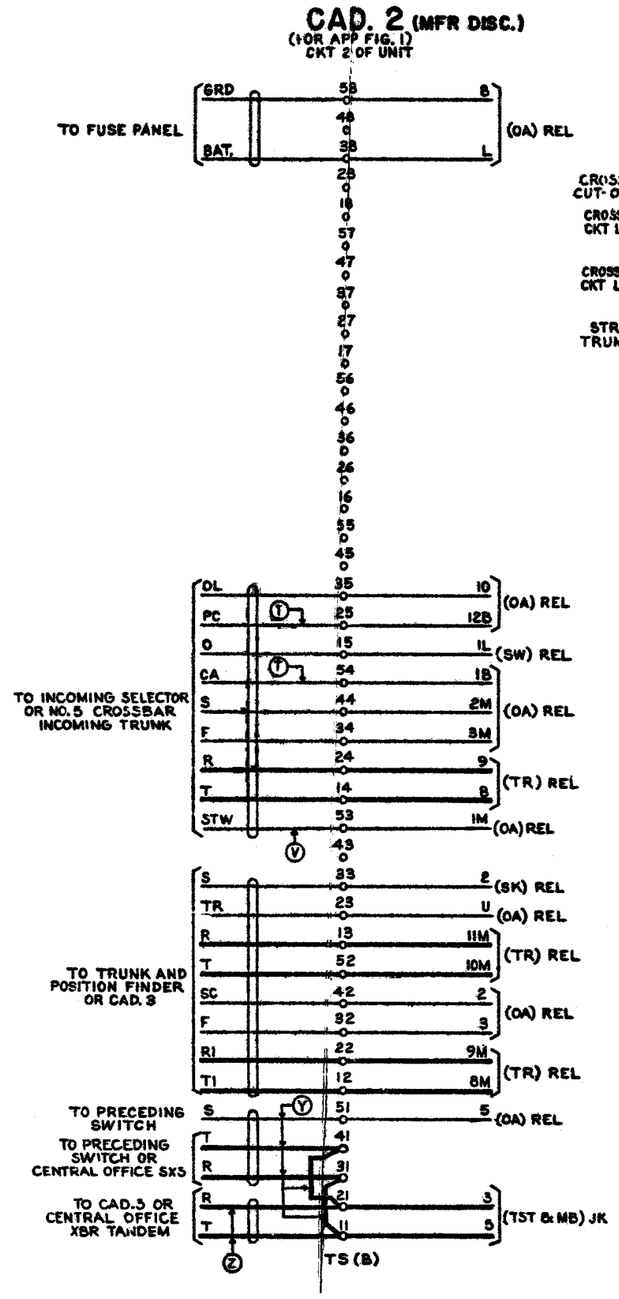

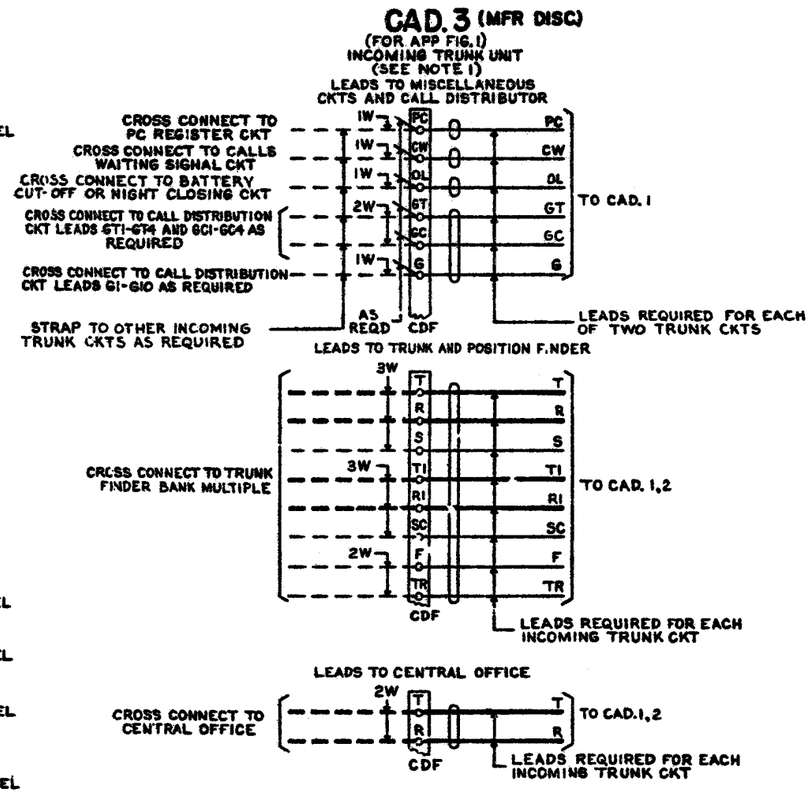

SHEET NOTES:

1. THE OL AND OL1 LEADS ARE CROSS CONNECTED ONCE ONLY ON THE FIRST AND LAST TRUNKS, RESPECTIVELY, OF A CUSTOMERS GROUP OF 99 TRUNKS OR LESS. WHEN THE MAXIMUM NUMBER OF TRUNKS (99) IS EXCEEDED, THE OL AND OL1 LEADS ARE AGAIN CROSS CONNECTED TO THE SUCCEEDING CONNECTING CIRCUIT.

   THE GT AND GC LEADS ARE CROSS CONNECTED TO THE CONNECTING CIRCUIT ONCE ONLY FOR EACH CUSTOMERS GROUP OF TRUNKS, MAXIMUM 99 TRUNKS.

   THE G LEAD IS TO BE CROSS CONNECTED ONCE ONLY FOR EACH SUBGROUP OF TEN TRUNKS.

   THE PC LEAD IS TO BE CROSS CONNECTED ONCE ONLY FOR EACH PC REGISTER OR GROUP OF TRUNKS.

   THE CW LEAD IS TO BE CROSS CONNECTED TO THE CONNECTING CKT ONCE ONLY FOR ALL TRUNKS IN EACH CUSTOMERS GROUP.

12

INCOMING TRUNK CIRCUIT (2) SD-65812-01-G1

BELL TELEPHONE LABORATORIES INCORPORATED 6S

SD-65812-01-G1

TCI Library- http://www.telephonecollectors.info/

CAD 4 (MFR DISC)

(FOR APP FIG 1)
(SEE NOTE 7)
CKT 1 OF UNIT

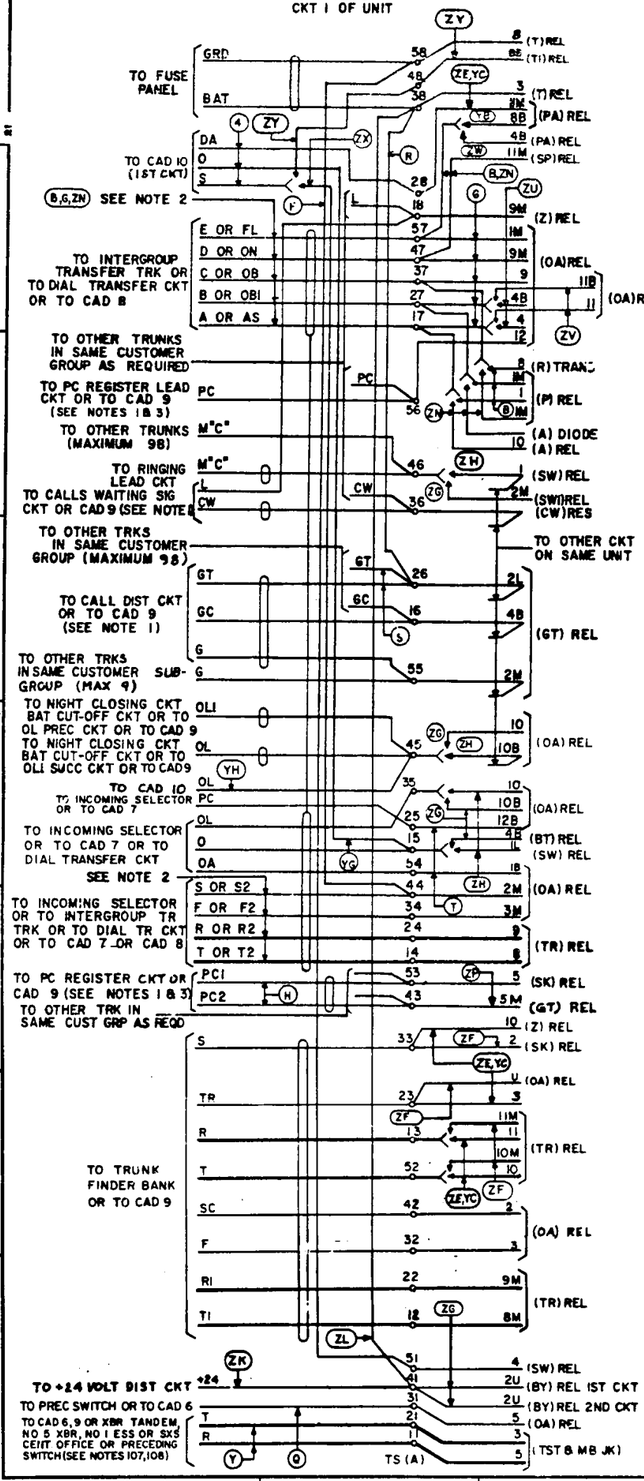

CAD 5 (MFR DISC)

(FOR APP FIG 1)
(SEE NOTE 8)
CKT 2 OF UNIT

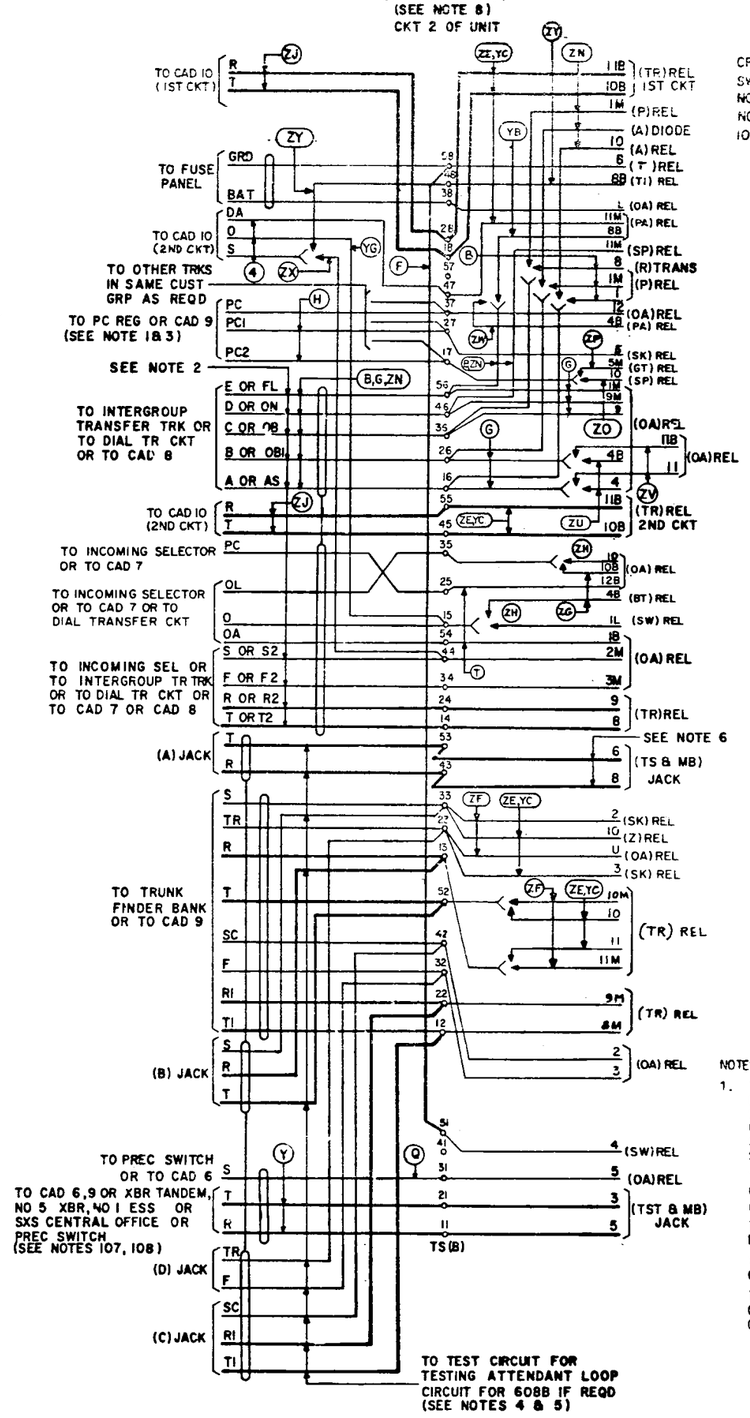

CAD 6 (MFR DISC)

CROSS CONNECTION WHEN Y AND Q OPTION IS REQUIRED

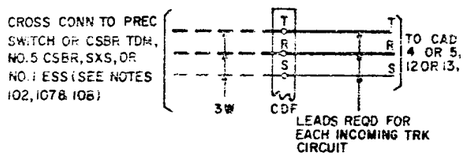

CAD 7 (MFR DISC)

DISTRIBUTING FRAME

TERMINATION TO INCOMING SELECTOR

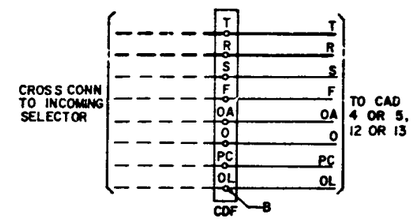

CAD 8 (MFR DISC)

DISTRIBUTING FRAME

TERMINATION TO INTERGROUP TRANSFER TRK OR DIAL TRANSFER CKT

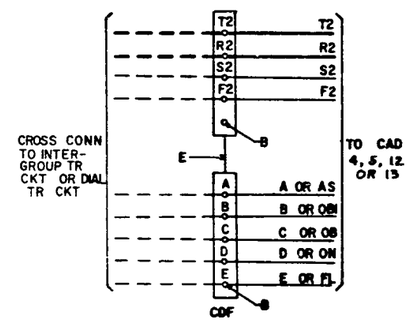

NOTES:

1. THE OL AND OL1 LEADS ARE CROSS CONNECTED ONCE ONLY ON THE FIRST AND LAST TRUNKS, RESPECTIVELY, OF A CUSTOMERS GROUP OF 99 TRUNKS OR LESS. WHEN THE MAXIMUM NUMBER OF TRUNKS (99) IS EXCEEDED, THE OL AND OL1 LEADS ARE AGAIN CROSS CONNECTED TO THE SUCCEEDING CONNECTING CIRCUIT.

   THE GT AND GC LEADS ARE CROSS CONNECTED TO THE CONNECTING CIRCUIT ONCE ONLY FOR EACH CUSTOMERS GROUP OF TRUNKS, MAXIMUM 99 TRUNKS.

   THE G LEAD IS TO BE CROSS CONNECTED ONCE ONLY FOR EACH SUBGROUP OF TEN TRUNKS.

   THE PC, PC1 & PC2 LEADS ARE TO BE CROSS CONNECTED ONCE EACH PC REGISTER OR GROUP OF TRUNKS.

   THE L & CW LEADS ARE TO BE CROSS CONNECTED TO THE CONNECTING CKT ONCE ONLY FOR ALL TRUNKS IN EACH CUSTOMERS GROUP.

NOTES (CONT)

2. WHEN THE INTERGROUP TRANSFER TRUNKS OF DIAL TRANSFER CIRCUIT ARE LOCATED ON THE SAME MISC RELAY RACK RUN AS LOOSE WIRE: OTHERWISE RUN IN CABLE.
3. PC PROVIDES FOR REGISTRATION OF ALL DID CALLS. P21 PROVIDES FOR REGISTRATION OF ALL CALLS TO ATTENDANT. P22 PROVIDES FOR REGISTRATION OF DIRECTORY NUMBER CALLS.
4. ONCE INCOMING TRUNK PER INSTALLATION IS REQUIRED FOR TESTING ATTENDANT LOOP CIRCUITS FOR 608B.
5. THE INCOMING TRUNK USED FOR TESTING SHOULD NOT BE THE FIRST OR LAST TRUNK OF A GROUP OF TRUNKS.
6. INSTALLER SHALL RUN STRAPS FROM TERMINALS 6 & 8 OF THE TST & MB JACK OF THE TRUNK USED FOR TESTING TO THE TERMINAL STRIP OF THAT UNIT.
7. CAD 4, RATED "MFR DISC" ON ISSUE 12 OF THIS DRAWING IS REPLACED BY CAD 12. TO CONVERT A TERMINAL STRIP FURNISHED PER CAD 4 TO CAD 12, THE FOLLOWING CHANGES MUST BE MADE:

   IF OPTION "F" IS PROVIDED, REMOVE THE STRAP BETWEEN PUNCHINGS 51 AND 58 OF T.S.(A). DISCONNECT THE APPARATUS END OF THE LEAD BETWEEN PUNCHING 51 OF T.S.(A) AND TERMINAL 4 OF RELAY SW(1ST CKT) AND RECONNECT IT TO TERMINAL 4M OF RELAY SW(1ST CKT). IF APP. FIG. 4 IS PROVIDED, REMOVE THE "O" LEAD FROM PUNCHING 15 OF T.S.(A) AND RECONNECT IT TO PUNCHING 51 OF T.S.(A). IF OPTION "F" IS PROVIDED, CONNECT A LEAD FROM TERMINAL 4 OF RELAY SW(1ST CKT) TO PUNCHING 58 OF T.S.(A). IF APP. FIG. 4 IS PROVIDED CONNECT "OL" LEAD TO PUNCHING 45 OF T.S.(A).
8. CAD 5, RATED "MFR DISC" ON ISSUE 12 OF THIS DRAWING IS REPLACED BY CAD 13. TO CONVERT A TERMINAL STRIP FURNISHED PER CAD 5 TO CAD 12, THE FOLLOWING CHANGES MUST BE MADE:

   IF OPTION "F" IS PROVIDED, REMOVE THE STRAP BETWEEN PUNCHINGS 51 AND 58 OF T.S.(B). DISCONNECT THE APPARATUS END OF THE LEAD BETWEEN PUNCHING 51 OF T.S.(B) AND TERMINAL 4 OF RELAY SW (2ND CKT) AND RECONNECT IT TO TERMINAL 4M OF RELAY SW (2ND CKT). IF APP. FIG. 4 IS PROVIDED, REMOVE THE "O" LEAD FROM PUNCHING 15 OF T.S.(B) AND RECONNECT IT TO PUNCHING 51 OF T.S.(B). IF OPTION "F" IS PROVIDED, CONNECT A LEAD FROM TERMINAL 4 OF RELAY SW (2ND CKT) TO PUNCHING 58 OF T.S.(B). CONNECT A LEAD FROM TERMINAL 3M OF RELAY SW (1ST CKT) TO PUNCHING 57 OF T.S.(B). CONNECT A LEAD FROM TERMINAL 3M OF RELAY SW (2ND CKT) TO PUNCHING 41 OF T.S.(B). IF APP. FIG. 4 IS PROVIDED, CONNECT "WK" LEADS TO PUNCHINGS 41 AND 57 OF T.S.(B).

DRAWING ISSUE	
3B	GJB WVB PD
2A	RT PD
4B	SKA AS PD
5B	RMP VMA TEB
7B	TB WF TEB
8B	SAK JFF KFJ
9D	SAK JFF KEJ
10AC	RKM SAK KFJ
12AC	GAH PJS FHP

W ORN DRAWING REPRODUCED WITHOUT CHANGE 12-6-66 PM.C

14B

14

INCOMING TRUNK CIRCUIT

BELL TELEPHONE LABORATORIES INCORPORATED

SD-65812-01-G2

6S

SD-65812-01-G2

TCI Library- http://www.telephonecollectors.info/

CAD.9(MFR DISC)

(FOR APP FIG.1)
INCOMING TRUNK UNIT
SEE NOTE 1
LEADS TO MISCELLANEOUS
CKT AND CALL DISTRIBUTOR

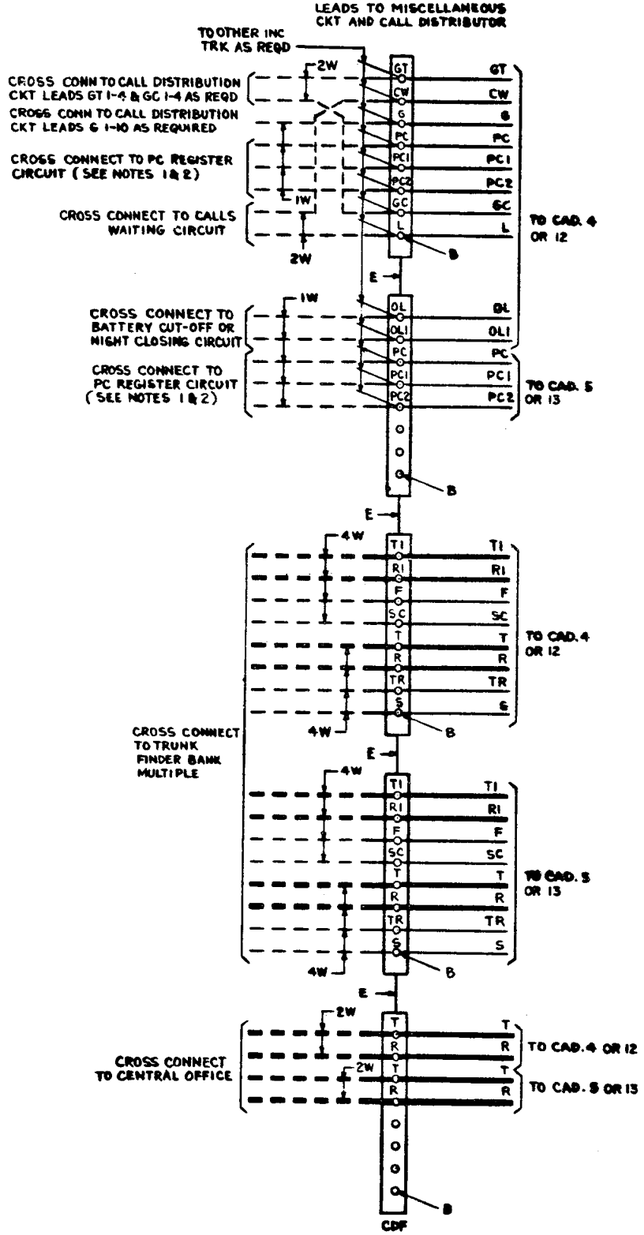

CAD. 10 (MFR DISC)

(FOR APP FIG. 4)

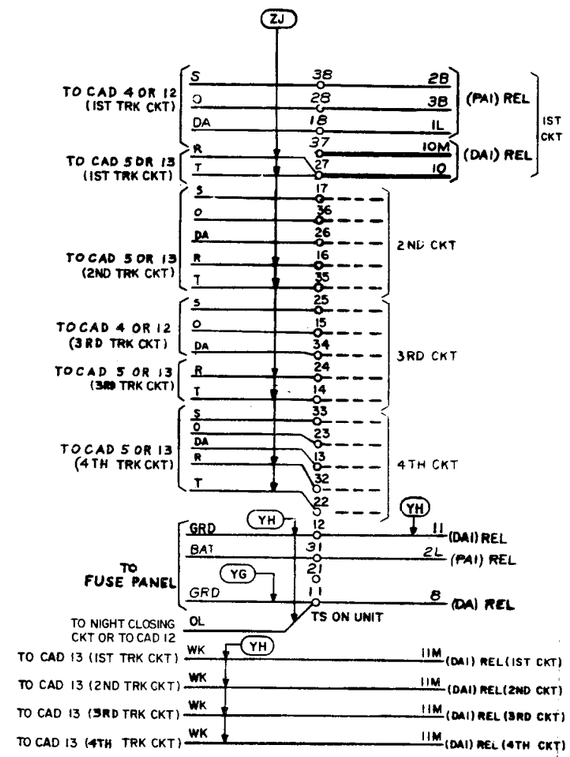

CAD 11 (MFR DISC)

(FOR APP FIG. 4)

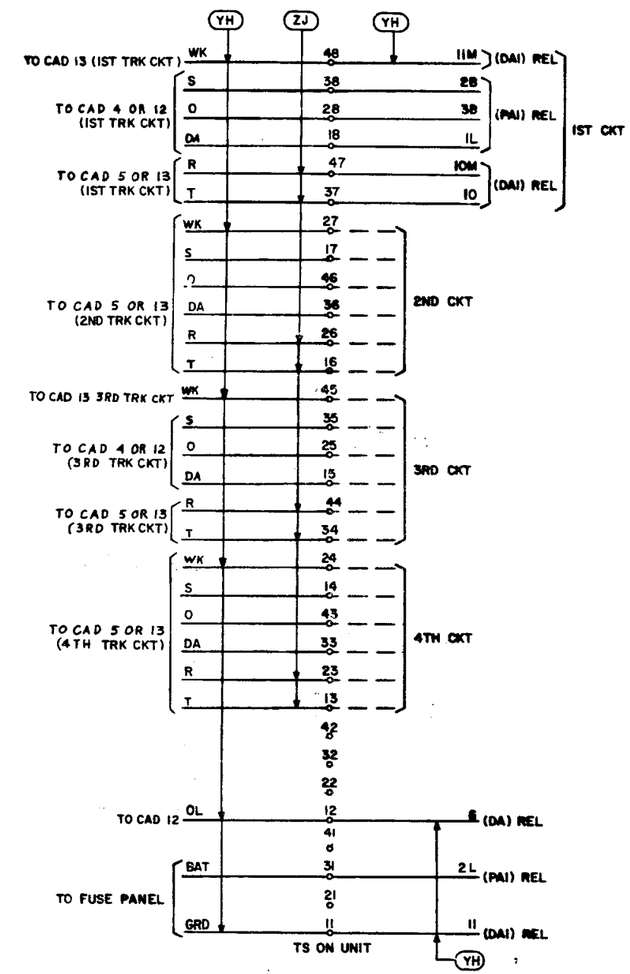

SHEET NOTES:

1. THE OL AND OL1 LEADS ARE CROSS CONNECTED ONCE ONLY ON THE FIRST AND LAST TRUNKS, RESPECTIVELY, OF A CUSTOMERS GROUP OF 99 TRUNKS OR LESS. WHEN THE MAXIMUM NUMBER OF TRUNKS (99) IS EXCEEDED, THE OL AND OL1 LEADS ARE AGAIN CROSS CONNECTED TO THE SUCCEEDING CONNECTING CIRCUIT.

   THE GT AND GC LEADS ARE CROSS CONNECTED TO THE CONNECTING CIRCUIT ONCE ONLY FOR EACH CUSTOMERS GROUPS OF TRUNKS, MAXIMUM 99 TRUNKS.

   THE G LEAD IS TO BE CROSS CONNECTED ONCE ONLY FOR EACH SUBGROUP OF TEN TRUNKS.

   THE PC, PC1 & PC2 LEADS ARE TO BE CROSS CONNECTED ONCE ONLY FOR EACH PC REGISTER OR GROUP OF TRUNKS.

   THE L & CW LEADS ARE TO BE CROSS CONNECTED TO THE CONNECTING CKT ONCE ONLY FOR ALL TRUNKS IN EACH CUSTOMERS GROUP.

2. PC PROVIDES FOR REGISTRATION OF ALL DID CALLS.
   PC1 PROVIDES FOR REGISTRATION OF ALL CALLS TO ATTENDANT.
   PC2 PROVIDES FOR REGISTRATION OF DIRECTORY NUMBER CALLS.

DRAWING ISSUE	
5B	RT, PD
7B	TB, KBG
12AC	GAH, PJS, RHP
14B	

14

INCOMING TRUNK CIRCUIT (2)

BELL TELEPHONE LABORATORIES INCORPORATED

DWG SIZE 6S

SD-65812-01-G3

SD-65812-01-G3

TCI Library- http://www.telephonecollectors.info/

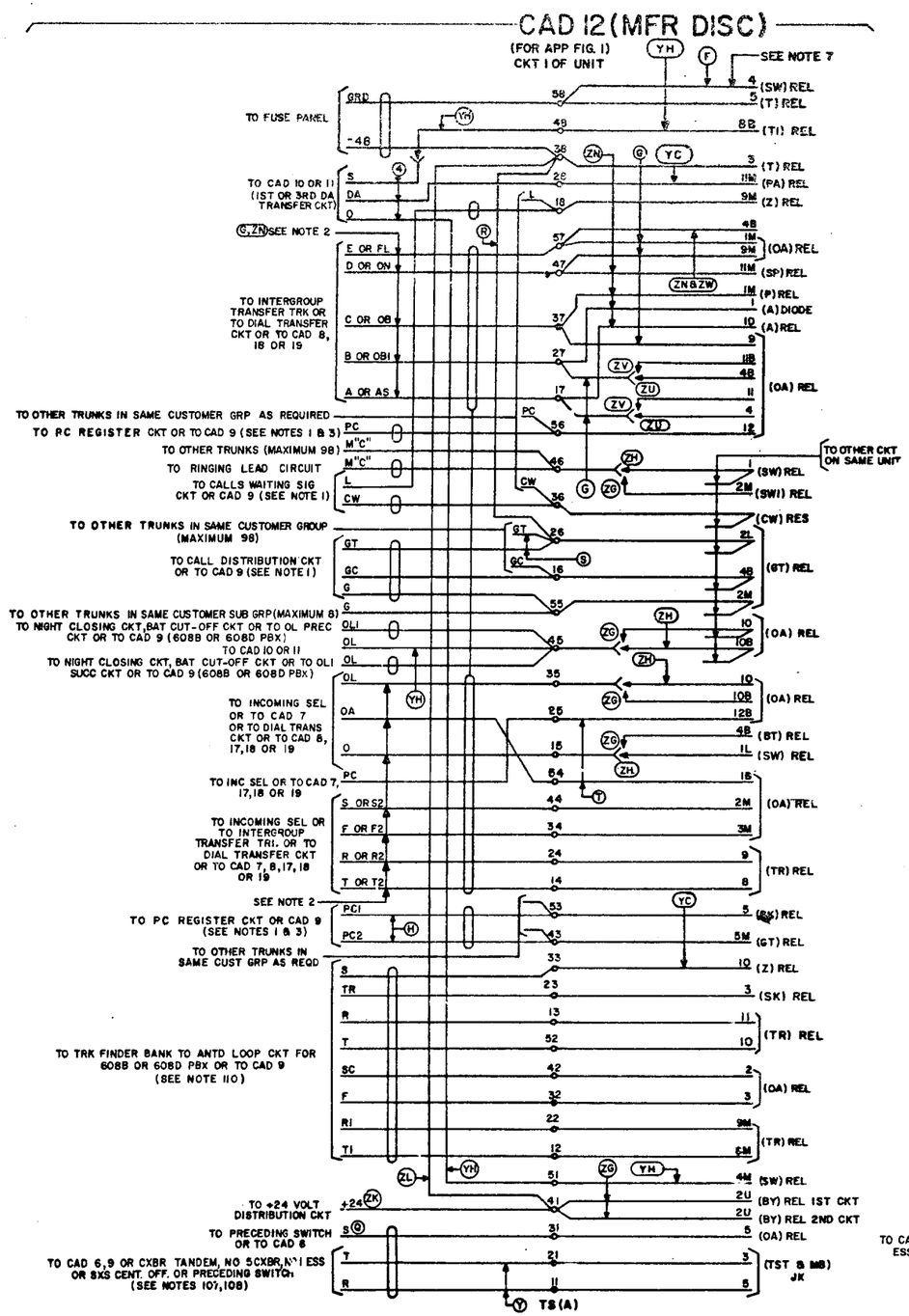

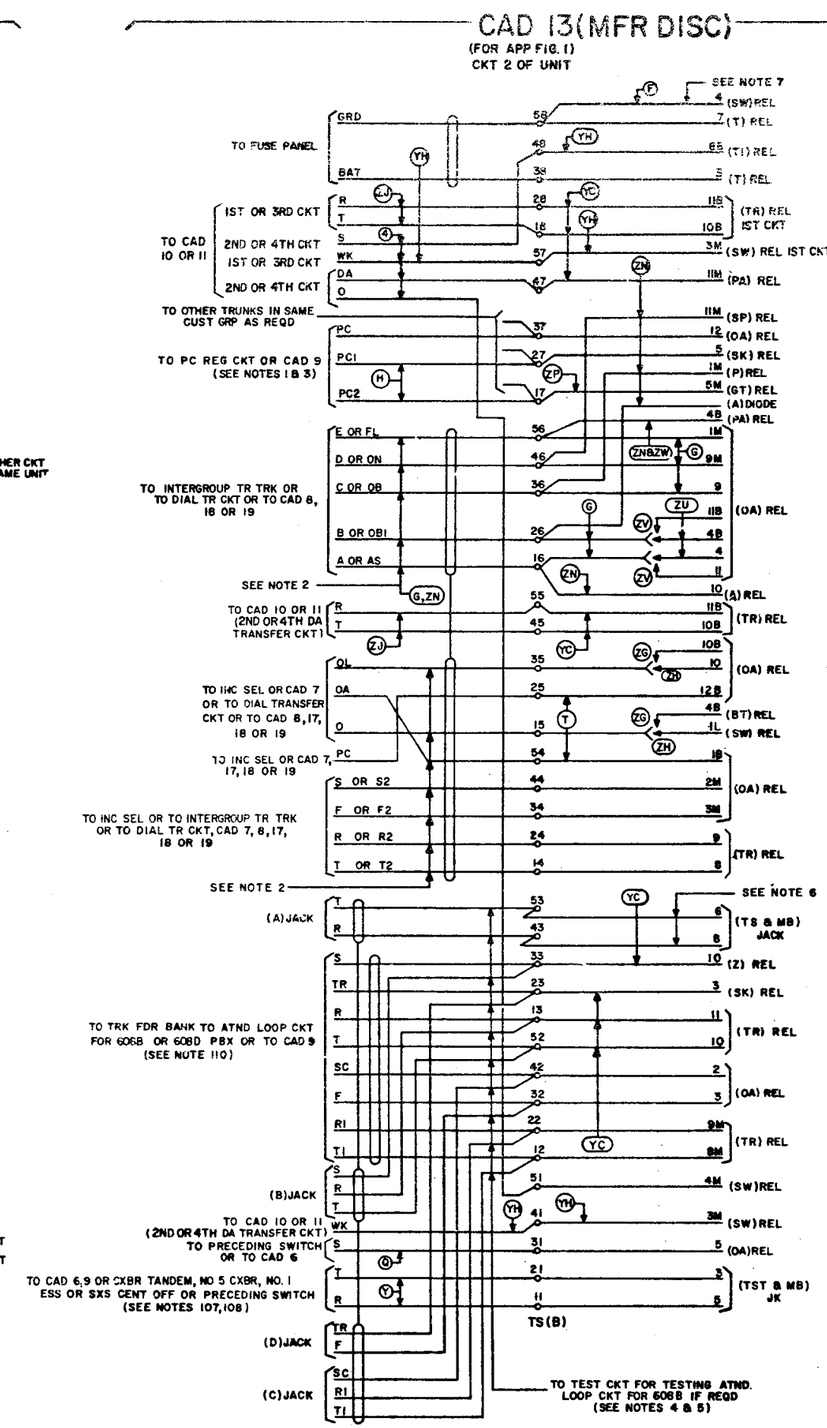

SHEET NOTES:

1. THE OL AND OLI LEADS ARE CROSS CONNECTED ONCE ONLY ON THE FIRST AND LAST TRUNKS, RESPECTIVELY, OF A CUSTOMERS GROUP OF 99 TRUNKS OR LESS. WHEN THE MAXIMUM NUMBER OF TRUNKS (99) IS EXCEEDED, THE OL AND OLI LEADS ARE AGAIN CROSS CONNECTED TO THE SUCEEDING CONNECTING CIRCUIT.

   THE GT AND GC LEADS ARE CROSS CONNECTED TO THE CONNECTING CIRCUIT ONCE ONLY FOR EACH CUSTOMERS GROUP OF TRUNKS, MAXIMUM 99 TRUNKS.

   THE G LEAD IS TO BE CROSS CONNECTED ONCE ONLY FOR EACH SUBGROUP OF TEN TRUNKS.

   THE PC, PC1 & PC2 LEADS ARE TO BE CROSS CONNECTED ONCE EACH PC REGISTER OR GROUP OF TRUNKS.

   THE L & CW LEADS ARE TO BE CROSS CONNECTED TO THE CONNECTING CKT ONCE ONLY FOR ALL TRUNKS IN EACH CUSTOMERS GROUP.
2. WHEN THE INTERGROUP TRANSFER TRUNKS OR DIAL TRANSFER CIRCUIT ARE LOCATED ON THE SAME MISC RELAY RACK RUN AS LOOSE WIRE; OTHERWISE RUN IN CABLE.
3. PC PROVIDES FOR REGISTRATION OF ALL DID CALLS. PC1 PROVIDES FOR REGISTRATION OF ALL CALLS TO ATTENDANT. PC2 PROVIDES FOR REGISTRATION OF DIRECTORY NUMBER CALLS.
4. ONE INCOMING TRUNK PER INSTALLATION IS REQUIRED FOR TESTING ATTENDANT LOOP CIRCUITS FOR 608B.
5. THE INCOMING TRUNK USED FOR TESTING SHOULD NOT BE THE FIRST OR LAST TRUNK OF A GROUP OF TRUNKS.
6. INSTALLER SHALL RUN STRAPS FROM TERMINALS 6 & 8 OF THE TST AND MB JACK OF THE TRUNK USED FOR TESTING TO THE TERMINAL STRIP OF THAT UNIT.
7. WHEN OPTION "F" IS NOT REQUIRED, THE INSTALLER SHALL REMOVE THE LEAD FROM PUNCHING 58 OF TS(A) AND TS(B) TO TERMINAL 4 OF THE SW RELAY ON CKT 1 AND CKT 2 RESPECTIVELY.

DRAWING ISSUE
12 AC FED JS RHP HW
14B
DR

14

INCOMING TRUNK CIRCUIT (2)

SD-65812-01-G4

BELL TELEPHONE LABORATORIES INCORPORATED

6S

SD-65812-01-G4

TCI Library- http://www.telephonecollectors.info/

PART OF CAD 14
(FOR APP FIG. 1 AND 5)

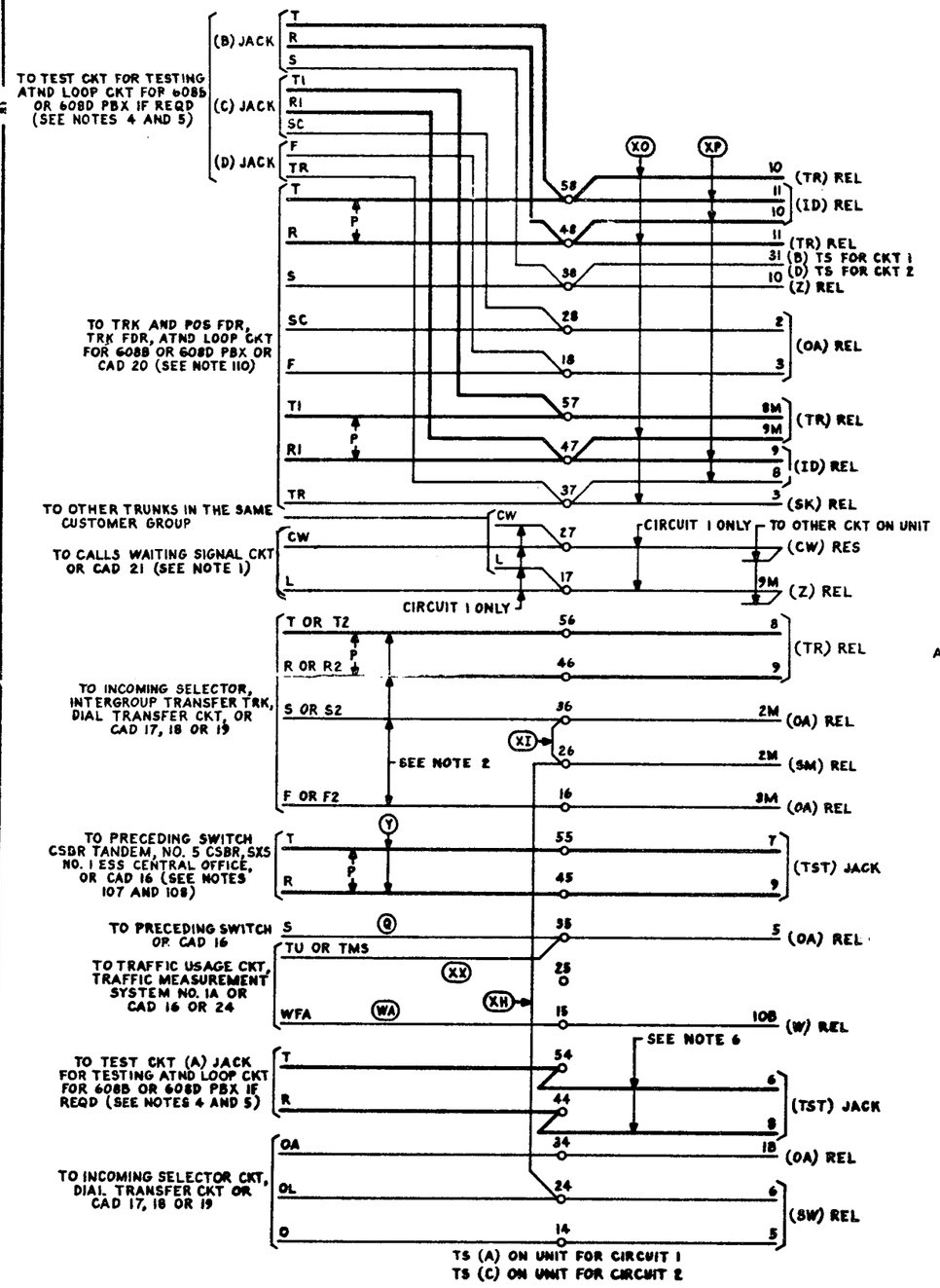

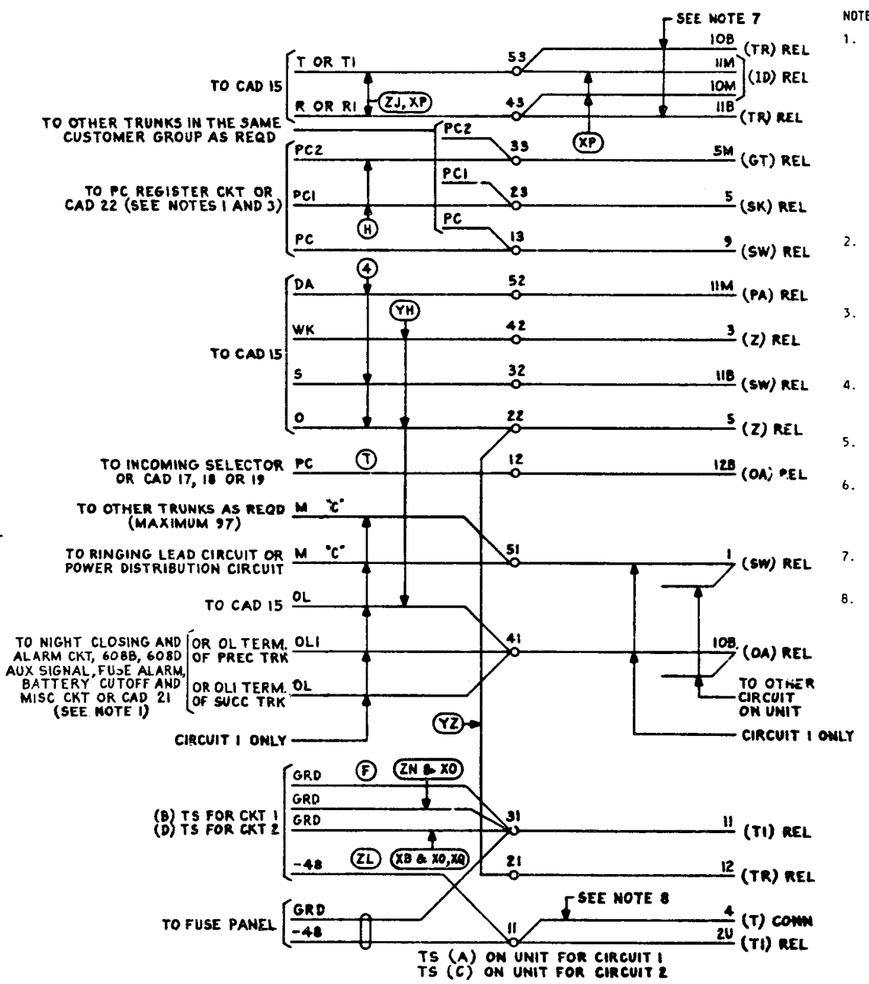

NOTES:

1. THE CL AND OL1 LEADS ARE CROSS CONNECTED ONCE ONLY ON THE FIRST AND LAST TRUNKS, RESPECTIVELY, OF A CUSTOMERS GROUP OF 99 TRUNKS OR LESS. WHEN THE MAXIMUM NUMBER OF TRUNKS (99) IS EXCEEDED, THE OL AND OL1 LEADS ARE AGAIN CROSS CONNECTED TO THE SUCCEEDING CONNECTING CIRCUIT.

   THE PC, PC1 & PC2 LEADS ARE TO BE CROSS CONNECTED ONCE EACH PC REGISTER OR GROUP OF TRUNKS.

   THE L & CW LEADS ARE TO BE CROSS CONNECTED TO THE CONNECTING CKT ONCE ONLY FOR ALL TRUNKS IN EACH CUSTOMERS GROUP.

2. WHEN THE INTERGROUP TRANSFER TRUNKS OR DIAL TRANSFER CIRCUIT ARE LOCATED ON THE SAME MISC RELAY RACK RUN AS LOOSE WIRE; OTHERWISE RUN IN CABLE.

3. PC PROVIDES FOR REGISTRATION OF ALL DID CALLS. PC1 PROVIDES FOR REGISTRATION OF ALL CALLS TO ATTENDANT. PC2 PROVIDES FOR REGISTRATION OF DIRECTORY NUMBER CALLS.

4. ONE INCOMING TRUNK PER INSTALLATION IS REQUIRED FOR TESTING ATTENDANT LOOP CIRCUITS FOR 608B OR 608D PBX.

5. THE INCOMING TRUNK USED FOR TESTING SHOULD NOT BE THE FIRST OR LAST TRUNK OF A GROUP OF TRUNKS.

6. THE INSTALLER SHALL RUN STRAPS FROM TERMINALS 6 & 8 OF THE TST JACK OF THE TRUNK USED FOR TESTING TO THE TERMINAL STRIP OF THAT UNIT. CKT 1 OR CKT 2 MAY BE USED FOR TESTING.

7. PROVIDED ONLY WHEN OPTION XO IS SPECIFIED. (SEE NOTE 114).

8. BAT FOR TERMINAL 4 OF CONN(T) IS OBTAINED FROM FIRST CKT ON UNIT ONLY.

DRAWING ISSUE 14B

14

INCOMING TRUNK CIRCUIT

2

SD-65812-01-G5

BELL TELEPHONE LABORATORIES INCORPORATED

6S

SD-65812-01-G5

TCI Library- http://www.telephonecollectors.info/

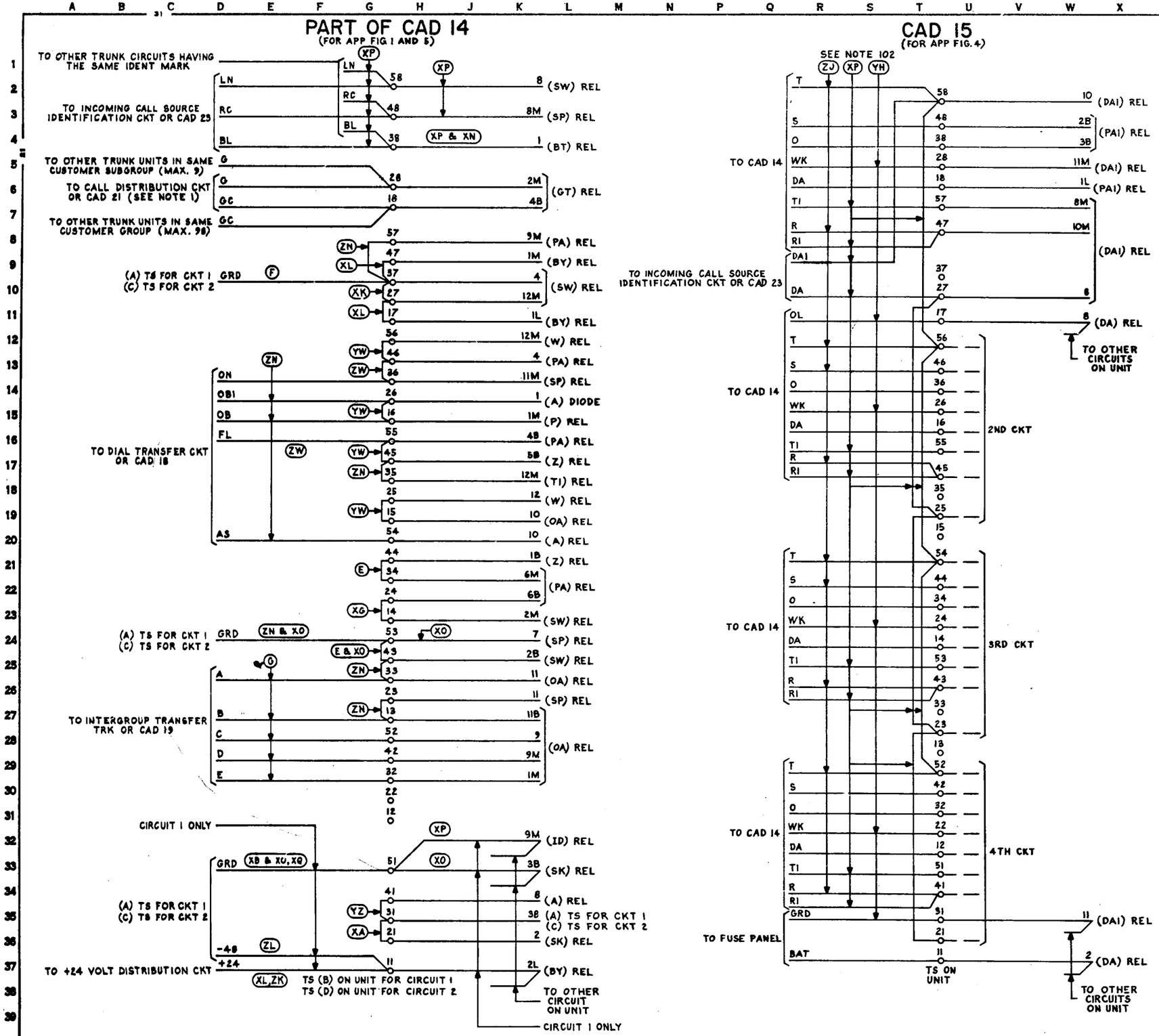

NOTES:

1. THE GC LEAD IS CROSS CONNECTED TO THE CONNECTING CIRCUIT ONCE ONLY FOR EACH CUSTOMERS GROUP OF TRUNKS, MAXIMUM 99 TRUNKS.

   THE G LEAD IS TO BE CROSS CONNECTED ONCE ONLY FOR EACH SUBGROUP OF TEN TRUNKS.

DRAWING ISSUE 14B

14

INCOMING TRUNK CIRCUIT

2

SD-65812-01-G6

BELL TELEPHONE LABORATORIES INCORPORATED

6S

SD-65812-01-G6

TCI Library- http://www.telephonecollectors.info/

CAD 16 (FOR 2 CIRCUITS)
DISTRIBUTING FRAME TERMINATION

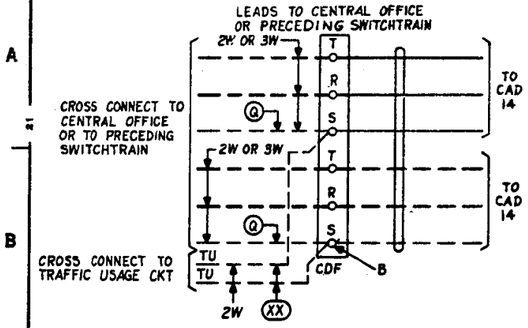

CAD 17 (FOR 1 CIRCUIT)
DISTRIBUTING FRAME TERMINATION

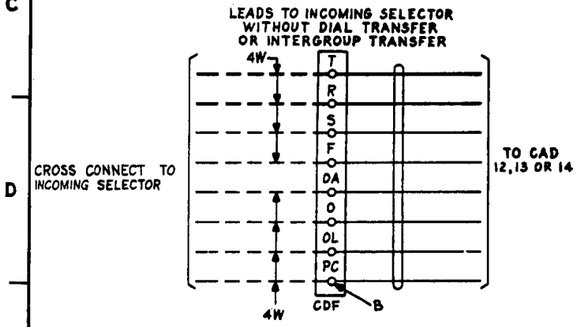

CAD 18 (FOR 1 CIRCUIT)
DISTRIBUTING FRAME TERMINATION

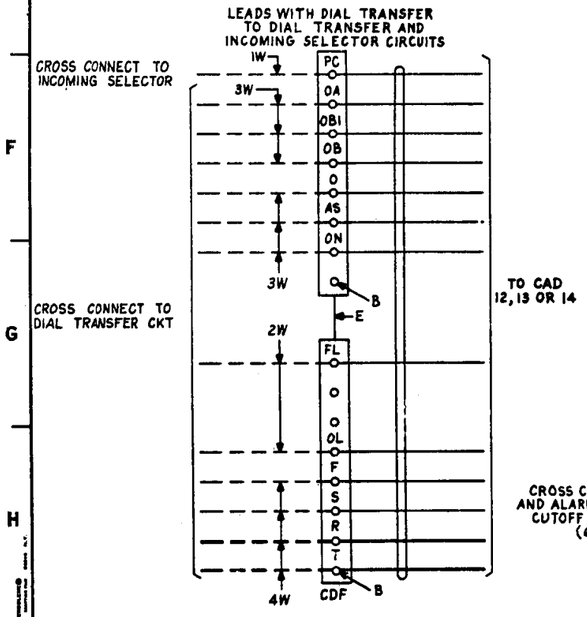

CAD 19 (FOR 1 CIRCUIT)
DISTRIBUTING FRAME TERMINATION

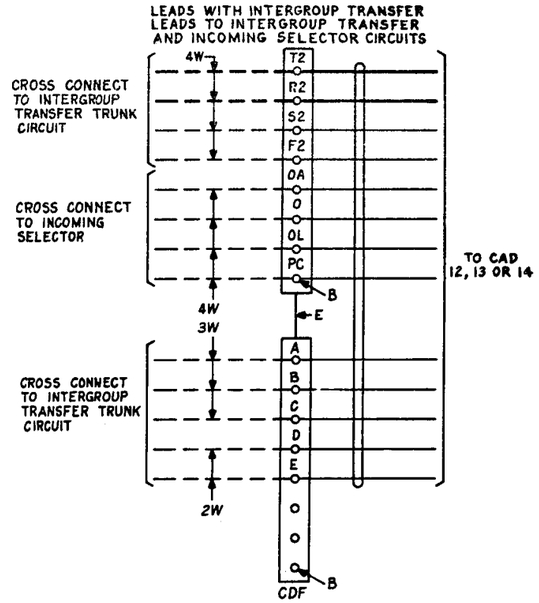

CAD 20 (FOR 1 CIRCUIT)
DISTRIBUTING FRAME TERMINATION

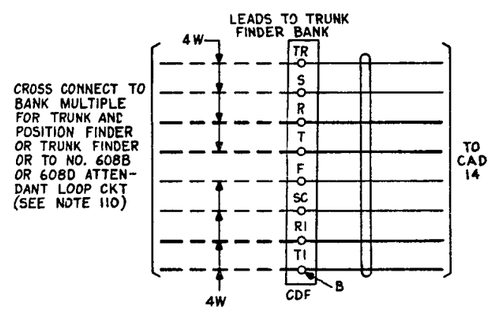

CAD 21 (FOR 2 CIRCUITS)
DISTRIBUTING FRAME TERMINATION

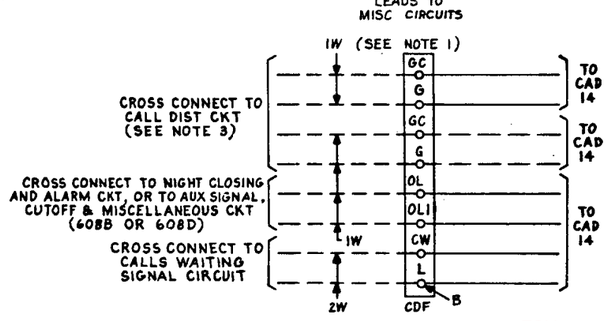

CAD 22 (FOR 2 CIRCUITS)
DISTRIBUTING FRAME TERMINATION

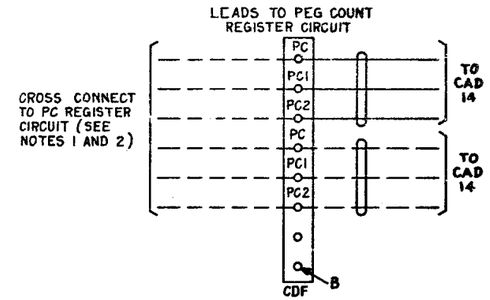

CAD 23
DISTRIBUTING FRAME TERMINATION

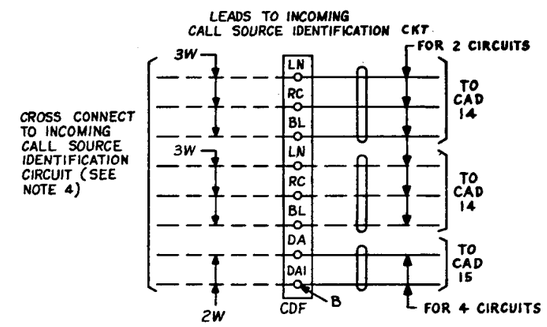

CAD 24 (FOR 1 CIRCUIT)
DISTRIBUTING FRAME TERMINATION

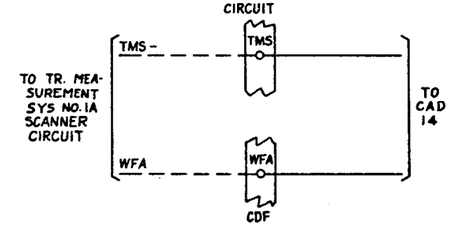

NOTES:

1. THE OL AND OL1 LEADS ARE CROSS CONNECTED ONCE ONLY ON THE FIRST AND LAST TRUNKS, RESPECTIVELY, OF A CUSTOMERS GROUP OF 99 TRUNKS OR LESS. WHEN THE MAXIMUM NUMBER OF TRUNKS (99) IS EXCEEDED, THE OL AND OL1 LEADS ARE AGAIN CROSS CONNECTED TO THE SUCCEEDING CONNECTING CIRCUIT.

   THE GC LEAD IS CROSS CONNECTED TO THE CONNECTING CIRCUIT ONCE ONLY FOR EACH CUSTOMERS GROUPS OF TRUNKS, MAXIMUM 99 TRUNKS.

   THE G LEAD IS CROSS CONNECTED ONCE ONLY FOR EACH SUBGROUP OF TEN TRUNKS.

   THE PC, PC1 & PC2 LEADS ARE CROSS CONNECTED ONCE ONLY FOR EACH PC REGISTER OR GROUP OF TRUNKS.

   THE L & CW LEADS ARE CROSS CONNECTED TO THE CONNECTING CKT ONCE ONLY FOR ALL TRUNKS IN EACH CUSTOMERS GROUP.

2. PC PROVIDES FOR REGISTRATION OF ALL DID CALLS.

   PC1 PROVIDES FOR REGISTRATION OF ALL CALLS TO ATTENDANT.

   PC2 PROVIDES FOR REGISTRATION OF DIRECTORY NUMBER CALLS.

3. THE GC LEAD CROSS CONNECTS TO CALL DIST CKT LEADS GC 1-4 AS REQUIRED.

   THE G LEAD CROSS CONNECTS TO CALL DIST CKT LEADS G1-10 AS REQUIRED.

4. MULT LEADS LN, RC, BL, DA & DA1 TO LIKE LEADS OF OTHER TRUNK CIRCUITS HAVING THE SAME IDENT MARK.

DRAWING ISSUE 14B

14

INCOMING TRUNK CIRCUIT (2)

SD-65812-01-G7

BELL TELEPHONE LABORATORIES INCORPORATED

6S

PRINTED IN U.S.A.

SD-65812-01-G7

TCI Library- http://www.telephonecollectors.info/