KEY SYSTEMS SERVICE MANUAL

VOLUME II

Bell System

Comments concerning content, usability, and adequacy of this manual will be welcomed. This sheet may be removed and mailed directly to the Bell System Practices Organization. This sheet is not to be used for ordering manuals. The following page will give you ordering information.

Mail To:

Bell System
Data Design Engineering Manager
2400 Reynolda Road
Winston-Salem, N. C. 27106

Orders for these manuals should be placed on:

Western Electric
Indiana Publications Center
P. O. Box 26205
Indianapolis, Indiana 46226

KEY SYSTEMS SERVICE MANUAL

VOL II

NOTICE
Not for use or disclosure outside the
Bell System except under written agreement

Printed in U.S.A.

INTRODUCTION

The Key Systems Service Manual consists of Volumes I, II, and III. Volume I contains three parts: Common Key System Information, General Apparatus, and Telephone Sets. Volume II contains information concerning 1A, 1A1, and 1A2 Key Telephone Systems. Volume III includes those BSPs unique to COM KEY* services. The sections are compiled in the manual numerically and not in the order they appear in the Table of Contents.

This manual supports plant craft personnel in their daily work operations. The sections contained in the manual provide information necessary for installing and maintaining key systems.

For information not included in this manual, refer to the standard BSP files.

*Trademark of AT&T Company

ISSUE 6, JULY 1980

TABLE OF CONTENTS
VOLUME I

	Section Number	Issue	Subject
COMMON INFORMATION			
	460-110-130	1	Marking Physical Location of Station Equipment and Cable
●	461-200-101	7	Connector Cables — Identification
	Add 461-200-102	1	
	461-200-102	6	Adapter for Use With Connector Cables
●	Add 461-604-100	1	
●	461-604-100	5	Connecting Blocks — 66-Type — Tools, Terminating, Adapters, and Maintenance
●	461-604-101	4	Connecting Blocks — 66-Type — Numbering and Wiring Plan
●	461-604-102	6	Connecting Blocks — 66A, B, C, and M1 Types — Identification
	461-604-103	3	Connecting Blocks — 66E3-25, 66E4-25, and 66E8-25 — Identification and Installation
●	461-604-105	2	Connecting Blocks — 66M3-50R and 66M4-50R — Identification, Installation, and Maintenance
●	461-608-100	3	Connecting Blocks and Wiring Blocks — 88-Type
	461-620-100	2	Matrix Block — 1A1 — Identification, Installation, Wiring, and Maintenance
●	Add 463-130-100	1	
	463-130-100	12	Backboards — Identification and Installation
●	463-140-100	9	Equipment Cabinets and Apparatus Mountings — Identification
●	463-210-100	5	Lamp Indicators — Identification and Installation
●	501-120-100	11	Buzzers and Bells — Identification, Installation, Maintenance, Limitations, and Connections
	501-150-102	5	Designation Strips and Cards
●	502-110-100	3	Key Telephone Sets — Standard Features and Options — Basic Wiring Requirements
●	Add 502-110-102	1	
	502-110-102	4	Nonkey Telephone Sets — Conversion for Use With 1A1 or 1A2 Key Telephone Systems
	502-500-120	4	Telephone Sets — 540, 560, 1560, and 2560 Series — Common Installation and Maintenance Information
	502-600-100	3	Telephone Sets — 630, 1630, and 2630 Series
●	512-210-101	4	Separately Mounted Keys — 6017-, 6026-, KS-21254-, and KS-21776-Types — Identification, Installation, and Connections
●	512-210-103	6	Separately Mounted Keys — 6040-, 6041-, 6050-, and 6051-Types — Identification, Installation, and Connections
●	512-220-100	7	549- and 551-Type Pushbutton Keys — Identification, Installation, Maintenance, and Connections
●	512-700-100	5	4A Speakerphone Components — Identification, Installation, Operation, and Maintenance
POWER			
	167-416-201	7	101G (J86731) Power Plants — Identification, Installation, and Connections
	167-440-201	6	Power Units — 19- and 20-Type — Identification, Installation, Connections, and Maintenance
	167-446-101	5	Power Units — 29- and 30-Type — Identification, Installation, and Connections
	167-447-101	1	Power Units — 34B1 and 34C1 — Identification, Installation, and Connections
●	167-449-101	2	Power Unit — 47C — Identification, Installation, and Connections
TELEPHONE SETS			
SERVICE			
●	502-501-100	1	554BMS and 2554BMS Telephone Sets — Identification, Installation, and Maintenance
	502-541-406	2	564HD
●	502-541-407	5	564HK, 564HL, 564HLM, and 564HLMS
	502-541-410	2	565HD
●	502-541-414	6	565GK, 565GKM, and 565GKMS
●	502-541-415	8	565HK, 565HKM, and 565HKMS
●	502-541-416	8	565LK, 565LKM, and 565LKMS
●	502-543-403	6	2565GK and 2565GKM
●	502-543-405	8	2565HK, 2565HKM, and 2565HKMS
●	502-543-406	8	2565LK, 2565LKM, and 2565LKMS
	502-580-405	4	500L/M and 500MM
●	502-582-400	5	2500M and 2500MM
	502-610-406	2	630A, B, C, D and 631A, B, C, D
●	502-610-407	8	630DA, 630DAM, 630DAMS1, 631DA, 631DAM, and 631DAMS1

	Section Number	Issue	Subject
● Add	502-610-409	1	
	502-610-409	2	634A, B, C, D and 635A, C, D
	502-610-410	2	636A, B, C and 637A, B, C, D
	502-610-417	5	634DA, 634DAM, 635DA, and 635DAM
●	502-610-418	6	636CA, 636CAM, 636CAMS, 637DA, 637DAM, and 637DAMS
	502-612-400	3	2630D and 2631D
●	502-612-401	6	2630DA, 2630DAM, 2631DA, and 2631DAM
	502-612-403	2	2634D and 2635D
	502-612-404	1	2636- and 2637-Type
	502-612-409	5	2634DA, 2634DAM, 2635DA, and 2635DAM
	502-612-410	5	2636CA, 2636CAM, 2637DA, and 2637DAM
●	503-601-101	8	851- and 2851-Type
●	503-603-101	4	2872A1M or 2872A2M — (TOUCH-A-MATIC Automatic Dialer)
●	503-603-102	2	872A1M (TOUCH-A-MATIC Set)
●	503-701-101	9	830- and 2830-Type
●	503-702-101	9	831- and 2831-Type

VOLUME II

KEY TELEPHONE SYSTEMS — 1A, 1A1, AND 1A2

COMMON INFORMATION

	518-010-101	2	Centralized Key Telephone Installations
	518-010-105	2	Key Telephone System — Grounding and Special Protection Requirements
	518-010-106	3	Power Unit Selection — Key Telephone Systems and Key Service Units
	518-010-107	1	Key Telephone Systems — Reserve Power — 47C Power Unit
●	518-010-108	4	Common Audible Signaling — Key Telephone Systems
●	518-010-109	2	Voice Station Signaling on Manual Intercoms — Identification, Installation, and Maintenance
	518-010-110	1	2A1 Matrix Block — Identification, Installation, Connection, and Maintenance
● Add	518-010-111	1	
	518-010-111	2	Message Waiting Consoles Used With 1A, 1A1, or 1A2 Key Telephone Systems
●	518-010-115	2	Hands-Free Answering on Intercom — 1A1, 1A2, 6A, and 6B Key Telephone Systems
●	518-010-116	1	Paging Adapter Circuit — 278A Adapter
●	876-300-100	8	Electrical Protection — Stations and Customer Premises Equipment

SERVICE — 1A KTS

	518-112-420	1	50-Type Packaged Units
	518-112-421	2	Tie Line and Control Services
	518-112-422	1	Intercom Services

REFERENCE — 1A1 KTS

●	518-114-105	2	Identification and Arrangements
●	518-114-108	2	Installation and Maintenance
●	518-114-110	4	Key Telephone Units
Add	518-114-115	1	
	518-114-115	1	Packaged Key Telephone Units
	518-114-116	2	TOUCH-TONE Adapters

SERVICE — 1A1 KTS

	518-114-425	3	Key Telephone Units
	518-114-430	1	200F, G, and K Packaged Key Telephone Units
Add	518-114-431	1	
	518-114-431	3	200H Packaged Units
	518-114-432	1	Key Service Units

REFERENCE — 1A2 KTS

●	518-215-100	7	Identification and Arrangements

SERVICE — 1A2 KTS

●	518-215-400	7	Key Telephone Units — Line Services
● Add	518-215-401	1	
	518-215-401	3	Key Telephone Units — Auxiliary Line Services
●	518-215-402	4	Key Telephone Units — Intercom Services
	518-215-403	2	Key Telephone Units — Control Services
● Add	518-215-404	1	
	518-215-404	1	Key Service Units — 501- and 502-Type
● Add	518-215-405	1	
●	518-215-405	7	Key Service Units — 513-, 514-, and 515-Type

	Section Number	Issue	Subject
●	Add 518-215-407	2	
	518-215-407	1	Key Service Units — 550- and 551-Type
●	Add 518-215-410	1	
●	518-215-410	8	Panels — 583- and 584-Type
●	518-215-417	7	Panels — 597- and 598-Type
	518-215-418	2	Panels — 601-, 602- and 603-Type
●	518-215-419	5	Modular Panels — 620A (MDI), 641A, and 642A
●	Add 518-215-420	1	
●	518-215-420	6	Apparatus Mountings — 69B, D, and G
●	Add 518-215-421	2	
●	518-215-421	2	Modular Panel — 626A
●	518-215-422	3	Apparatus Mounting — 110A
●	518-215-424	1	630 Key Service Panel and 113A1 Connecting Unit — Identification, Installation, and Connections
●	518-411-100	2	6B Key Telephone System — DIALOG Intercom System
	518-300-413	4	259-Type Key Telephone Unit — Identification
	518-300-417	1	272A Key Telephone Unit — Identification

COMMON KTUs

	518-310-401	2	227A (MDI) and 227B Key Telephone Units — Audible and Visual Signaling — Identification and Connections
	518-310-405	5	Station Line Concentrators — 235- and 236-Type Key Telephone Units — Identification and Connections
	518-310-407	8	Key Telephone Unit — 237-Type — Identification, Operation, and Connections

VOLUME III

COM KEY® TELEPHONE SETS

●	503-603-120	3	575AM and 2575AM
●	503-701-110	4	832- and 2832-Type
●	503-702-110	4	833- and 2833-Type

COM KEY SYSTEMS

●	Add 518-450-100	1	
●	518-450-100	4	7A Communication System — (COM KEY 718)
●	Add 518-450-102	2	
	518-450-102	3	14A Communication System — (COM KEY 1434)
	518-450-105	2	4A Communication System — (COM KEY 416)
●	518-450-106	3	4A Communication System — (COM KEY 416) Using 981/2981- and 983/2983-Type
●	Add 518-450-110	1	
●	518-450-110	2	21A Communication System — (COM KEY 2152) — Descriptive and Ordering Information

● Indicates sections that have been addended, reissued, or added since last issue of manual.

CENTRALIZED KEY TELEPHONE INSTALLATIONS

1. GENERAL

1.01 This section contains information on centralized key telephone installations using color-coded modular backboards, 88-type wiring blocks and 600-series modular panels in equipment rooms, riser closets, apparatus closets, satellite closets, and satellite locations.

1.02 This section is reissued to:

- Add information on 187B1 and 188A1 backboards
- Add information on 88-type wiring blocks and 600-series modular panels
- Include information formerly contained in Section 461-100-101.

Since this reissue covers a general revision, arrows ordinarily used to indicate changes have been omitted.

1.03 This section covers the majority of basic Key Telephone System (KTS) services currently in use in an effort to create a standard centralized KTS installation. In some cases the scheme will not be clearly applicable and local improvisation will be required. In this case, the guidelines should be followed as closely as possible.

1.04 A well-planned terminal arrangement is essential for installation of all KTSs. Proper planning will ensure standard construction practices so craft personnel working on Key Telephone System installations will see the same layouts at all terminals. This planning should result in lower initial installation costs, maintenance expense, and improved housekeeping. The installation should also be planned with expansion in mind, rather than just to accommodate the customer's current demands.

1.05 When planning new installations, close coordination is required between the Architects and Builders Service, Station Installation, Marketing, and Outside Plant Engineering, to ensure standardization of apparatus and services provided by these groups.

1.06 Certain terms used to describe the standards for cross-connecting, terminating and cabling of KTS installations may be unfamiliar to the user. The following paragraphs define these terms.

(a) ***Terminal Room:*** Location (usually in the basement) inside a building where the entrance cable from the central office (CO) terminates. The CO pairs are cross-connected to the pairs that radiate throughout the building. PBX, key and/or special equipment may also be terminated in this room.

(b) ***Equipment Room:*** Location generally used to house PBX equipment. It may also contain KTS apparatus and terminating facilities.

(c) ***Apparatus Closet or Room:*** A location for terminating the inputs and outputs of CO, PBX, key and special equipment. The equipment is usually located in the apparatus closet. Locating the equipment in the closet provides the following advantages:

- Equipment-operating noise is eliminated from office area.
- Office appearance is improved.
- Work operations cause little disturbance to customer.
- Equipment space is minimized and common equipment can be shared.

(d) ***Riser Closets:*** Location on each floor where riser cables terminate for further distribution on that floor. A riser closet may also serve as an apparatus or satellite closet.

(e) ***Satellite Closet:*** Houses terminating facilities for KTS services, stations, and CO/PBX lines. It does not contain KTS apparatus.

NOTICE
Not for use or disclosure outside the
Bell System except under written agreement

(f) ***Satellite Location:*** Serves same function as a satellite closet. It may be a flush-mounted wall cabinet or box, a surface-mounted terminal box, or a terminal facility mounted in some other area.

(g) ***Key Telephone Stations:*** Multikey telephone sets which are used to receive and initiate calls.

(h) ***Key Telephone Systems:*** Building block units of station apparatus designed to provide multiline pickup, line lamp signals, common audible signaling, intercom, and auxiliary service. These units are installed on customer premises.

(i) ***Service Features:*** Categorized as follows:

- Basic line
- Intercom
- Auxiliary

(j) ***Basic Line Services:*** Include line pickup, line hold, and call status indications in the form of lamp signals for multiple lines appearing at key telephone stations.

(k) ***Intercom Service:*** Provides internal communication among stations without the need for connections through CO or PBX facilities.

(l) ***Auxiliary Services:*** Provide special features, such as:

- Exclusion
- Power failure transfer
- Incoming call transfer
- Auxiliary lamp control
- Common audible signals.

References

1.07 For additional information, refer to the following sections:

- 461-604-100—Connecting Blocks, 66-Type; Tools, Terminating, Adapters and Maintenance
- 461-604-102—Connecting Blocks, 66A, B, C and M1-Type, Identification
- 461-608-100—Connecting Blocks and Wiring Blocks, 88-Type
- 518-215-419—Service, 1A2 KTS Panels, 620-, 641-, and 642-Type.

2. IDENTIFICATION

2.01 The backboard and wiring block color scheme presented in this section is a standard plan to be followed when making terminations and cross-connections on customer premises. This plan calls for all inputs and outputs from KTS equipment located in a specific area to appear on one cross-connection field along with the termination of CO/PBX lines and station lines serving that area. There are four classes of lines that require cross-connections. These lines and the color backboard or wiring block field assigned to them are as follows:

BACKBOARD/WIRING BLOCK COLOR	LINES
green	1. Toward central office
blue	2. Toward station sets
red	3. To and from KTS equipment
yellow	4. To and from auxiliary equipment

Note: Purple has been designated PBX connections but will not be covered in detail since this section deals primarily with key system installations.

2.02 This standardized plan allows easy identification of the terminations of the telephone services involved. See Table A for backboard selection and Table B for wiring block selection.

3. PLANNING

3.01 A telephone closet (apparatus or satellite) contains the apparatus necessary to provide telephone service to the area served by the closet. This apparatus may also be housed in an equipment room. See Fig. 15 for a typical layout showing the relationship between closets.

TABLE A

BACKBOARD SELECTION

CODE	COLOR	SEE FIG.	MATERIAL	E/W 89B BRACKETS	E/W 66B4-25 CONNECTING BLOCKS	E/W DISTRIBUTING RINGS P-43X237	MAXIMUM NUMBER TERMINATIONS (PAIRS) USING CONNECTING BLOCKS		
							66M1-25*	66M1-50*	66B4-25
183A1	BLUE	1	METAL	4			100	200	
183A2	GREEN			4			100	200	
183A5	YELLOW			4			100	200	
183B1	BLUE	2		8			200	400	
183B2	GREEN			8			200	400	
183B3	RED			8			200	400	
183B5	YELLOW			8			200	400	
184A1	RED	3			2	6			50
184B1	RED	4			4	12			100
184B2	RED	5			4				100
185A1	YELLOW	6	PARTICLE BOARD			6			
187B1	WHITE	7	METAL			16			
188A1†	WHITE	8	METAL			4			

* Connecting blocks must be ordered separately.

† Use with 88-type wiring blocks only.

3.02 Each closet should meet the following requirements:

- Walls to be used to mount equipment should be lined with 3/4-inch plywood.
- Walls to be used to mount backboards should be equipped with 3/4-inch furring strips spaced on 10-inch horizontal centers starting even with the top of the top backboard.

Note: 88-type wiring blocks may be mounted directly on the wall using fasteners appropriate for the type of wall surface.

- A minimum of one ceiling light with a wall switch located near the door.
- A 20-ampere circuit with two 110-volt duplex receptacles.

3.03 For optimum working conditions, one closet should be provided for each 10,000 square feet of usable floor space. The cabling should be laid out so that all cable runs between the apparatus closet and the key equipment are as short as possible. Loop resistance should not exceed 50 ohms or approximately 1000 feet of 24-gauge cable.

TABLE B

88-TYPE WIRING BLOCKS

CODE (NOTE 1)	COLOR (NOTE 2)	MAX. NO. OF TERMINATIONS (PAIRS)	SEE FIG.
88AW1-100	White	100	9
88AW1-300		300	10
88BW1-25		25*	11
88BW1-25C ‡		25*	12
88BW1-75		75†	13
88BW1-75C ‡		75†	

Note 1: 3- or 5-pair 88-type connecting blocks (Fig. 14) must be installed to provide for cross-connects.

Note 2: Color-coded designation strips are used to determine application of the wiring blocks as follows:

Green field — 188AG1-100 (includes cable pair count)
Yellow field — 188BY1-100
Red field — 188BR1-100 or 188CR1-25
Blue field — 188AB1-100 (for tie cables — includes cable pair count)
— 188BB1-100 (for key stations)

* Five multiples of one 25-pair cable.

† Five multiples of three 25-pair cables.

‡ Factory-wired with a 5-foot length of connector cable.

3.04 See Tables C and D to estimate closet space required for KTS apparatus.

3.05 See Tables E and F to estimate horizontal wall space needed to mount modular backboards and 88-type wiring blocks in apparatus closets and satellite closets, respectively.

3.06 Fig. 16 shows a typical arrangement of modular apparatus installed in an apparatus closet.

3.07 The 88-type wiring blocks may be used in all indoor applications currently using 66-type connecting blocks and modular backboards. The 88-type wiring blocks provide the following advantages:

- Require less space
- Shorter jumpers and easier jumper tracing
- Easier pair identification for cross-connections.

3.08 Fig. 17 shows a typical arrangement of 88-type wiring blocks installed in an apparatus closet.

3.09 The 600-series modular panels may be intermixed in the RED terminal field with the 184B-type backboards. See Fig. 18.

4. INSTALLATION

Backboards—183- and 184-Type

4.01 The cornerstone of the terminating field is the green backboard on which the CO/PBX lines terminate. The minimum number of green backboards placed will be two, one above the other. The bottom of the lower backboard should be 12 inches off the floor and the left edge placed at a predetermined mark. See Fig. 19 and 20 for the

TABLE C

1A2 KEY TELEPHONE SYSTEM APPARATUS MOUNTING REQUIREMENTS

AREA SERVED IN SQUARE FEET	NUMBER OF APPARATUS MOUNTINGS (7 ft by 3 ft) *	FLOOR AREA IN SQUARE FEET REQUIRED IN CLOSET (SEE TABLE D)	LINEAR FEET OF LATERAL WALL SPACE REQUIRED IN CLOSET
Up to 18,000	1	12	4
18,000 to 36,000	2	16 or 32†	8

*For 1A1 key equipment use, one 7-foot apparatus mounting is required for up to 9000 sq. ft. of served floor area. For more than 9000 sq. ft., double the number of apparatus mountings.

†Required when apparatus mountings are located so that swing-open gate clearance space cannot be used jointly by both apparatus mountings.

TABLE D

CLOSETS FOR 1A2 KEY TELEPHONE SYSTEM APPARATUS MOUNTINGS

CLOSET-TYPE	MINIMUM DEPTH	REQUIREMENTS/REMARKS
Walk-in	3 ft	Provides clearance for swing-open apparatus mounting gate One wall can be used For shallow closet (1-1/2 ft min.), unobstructed access to corridor or office area for swing open gates
Walk-in	4 ft	If two adjacent walls or opposite walls are used for apparatus mounting
Walk-in	5 ft	If two opposite walls and common adjacent walls are used for apparatus mounting
Walk-in	4 ft	If two opposite walls only are used for apparatus mounting
Shallow Apparatus	1-1/2 ft (2-1/2 ft max.)	Minimum door height: 6 ft 8 in. Minimum door width: 3 ft with center post eliminated between doors Minimum ceiling height: 7-1/2 ft, to accept 85-inch apparatus mounting
Walk-in	3 ft	Minimum door height: 6 ft 8 in. Minimum door width: 3 ft Minimum ceiling height: 7-1/2 ft, to accept 85-inch apparatus mounting

basic mounting patterns for apparatus closets and satellite closets, respectively. Table G shows the sequence for mounting 66-type backboards in a standard configuration. Table H provides a similar sequence for 88-type apparatus.

Wiring Blocks—88 Type

4.02 The arrangement of the wiring blocks on a wall depends on the size and type of installation. A large KTS installation will use a horizontal arrangement of wiring blocks as shown in Fig. 21. A small KTS installation may use a vertical arrangement of wiring blocks as shown in Fig. 22.

4.03 In general, the color coding covered in 2.01 and the mounting patterns shown in Fig. 19 and 20 also apply to the 88-type wiring blocks.

600-Series Modular Panel

4.04 The 600-series modular panels may be intermixed with 184B-type connecting blocks anywhere in the RED terminal field as shown in Fig. 23 and 24.

5. WIRING PATTERNS

5.01 When outside plant, apparatus, and station cables have been permanently terminated, future installation and service changes will be accomplished by using jumpers.

5.02 Fig. 23 and Table I show jumper patterns for an apparatus closet which directly serves stations.

5.03 Fig. 24 and Table J show jumper patterns for an apparatus closet which directly serves two satellite closets.

TABLE E

BACKBOARD AND WIRING BLOCK SPACE ESTIMATION FOR APPARATUS CLOSET

BACKBOARD OR DESIG STRIP COLOR	SPACE FACTORS		SQUARE FOOTAGE OF FLOOR AREA BEING SERVED				
			1000	1500	2000	5000	10,000
GREEN	Two 183A2 or one 183B2 backboards or one 88AW1-300 wiring block will accommodate normal outside plant (CO) needs.						
YELLOW	One 185A1 backboard or one 88AW1-100 wiring block is normally adequate for auxiliary services. When special requirements are known, space must be provided in the yellow field.						
BLUE	A	Stations (sq. ft. floor area served by apparatus closet/100 = A)	10	15	20	50	100
	B	CALL DIRECTOR® tel sets (A/20 = B)	0	0	1	3	5
	C	Key tel sets (A − B = C)	10	15	19	47	95
	D	Number of cable conductor pairs per CALL DIRECTOR (75 x B = D)	0	0	75	225	375
	E	Number of cable conductor pairs for key tel sets (25 x C = E)	250	375	475	1175	2375
	F	Total number of pairs for stations (D + E = F)	250	375	550	1400	2750
	G	Stations (50% of total sq. ft. floor area to be served by satellite closet/100 = G)	5	8	10	25	50
	H	Number of cable conductor pairs for key sets (G x R = H)*	20	32	40	100	200
	I	Number of cable conductor pairs for miscellaneous (H x 10/100 = I)	2	3	4	10	20
	J	Total number of pairs in tie cable to satellite (H + I = J)	22	35	44	110	220
	AA	Stations (sq. ft. served by other app. closet/100 = AA)	10	15	20	50	100
	K	Total number of pairs in tie cable between app. closets ([A + AA] x 15/100 x R = K)	12	18	24	60	120
	L	Total pairs for blue backboards (F + J + K = L) †	284	428	618	1570	3090

TABLE E (Cont)

BACKBOARD AND WIRING BLOCK SPACE ESTIMATION FOR APPARATUS CLOSET

BACKBOARD OR DESIG STRIP COLOR	SPACE FACTORS		SQUARE FOOTAGE OF FLOOR AREA BEING SERVED				
			1000	1500	2000	5000	10,000
BLUE (Cont)	Number of 183A1 backboards, L/200 pairs per 183A1		2	3	4	8	16
	Number of 183B1 backboards, L/400 pairs per 183B1		1	2	2	4	8
	Number of 88AW1-100 backboards, L/100 pairs per 88AW1-100		3	5	7	16	31
	Number of 88AW1-300 backboards, L/300 pairs per 88AW1-300		1	2	3	6	11
RED	A	Stations served from apparatus closet	10	15	20	50	100
	M	Lines (A/1 station per line = M)	10	15	20	50	100
	Number of 184A1 backboards, M/10 lines per 184A1		1	2	2	5	10
	Number of 184B1 backboards, M/20 lines per 184B1		1	1	1	3	5
	Number of 88BW1-25 wiring blocks, M/5 lines per 88BW1-25		2	3	4	10	20
	Number of 88BW1-75 wiring blocks, M/15 lines per 88BW1-75		1	1	2	4	7
HORIZONTAL CLOSET SPACE REQUIRED‡	$\frac{184A1 \times 8.5 + 8.5}{12}$		1.4	2.2	2.2	4.25	7.8
	$\frac{184B1 \times 17 + 8.5}{12}$		2.2	2.2	2.2	5.0	7.8
	$\frac{(88BW1\text{-}25)}{6} \times \frac{10.75}{12}$ §		0.9	0.9	0.9	1.8	3.6
	$\frac{(88BW1\text{-}75)}{2} \times \frac{10.75}{12}$ §		0.9	0.9	0.9	1.8	3.6

* R = (4 pair per line/1 = 4 (ratio assumed to be greater than one station per line).

† For only one apparatus closet and no satellite closets, delete J and K; then L = F.

‡ Total required horizontal wall space is determined by the number of red backboards or wiring blocks times the width, plus the width of the yellow backboards or wiring blocks to be used.

§ Raise this result to next highest whole number. The 6 and 2 in the denominator result from a maximum of 6 (100 pairs) and 2 (300 pairs) wiring blocks per column.

TABLE F

BACKBOARD AND WIRING BLOCK SPACE ESTIMATION FOR SATELLITE CLOSET

BACKBOARD OR DESIG STRIP COLOR*	SPACE FACTORS		SQUARE FOOTAGE OF FLOOR AREA BEING SERVED				
			1000	1500	2000	5000	10,000
BLUE	A	Stations (sq. ft. floor area served by satellite closet/100 = A)	10	15	20	50	100
	B	CALL DIRECTOR® tel sets (A/20 = B)	0	0	1	3	5
	C	Key tel sets (A − B = C)	10	15	19	47	95
	D	Number of cable conductor pairs per CALL DIRECTOR (75 x B = D)	0	0	75	225	375
	E	Number of cable conductor pairs per key tel set (25 x C = E)	250	375	475	1175	2375
	F	Total number of pairs for satellite (D + E = F)	250	375	550	1400	2750
	Number of 183A1 backboards, F/200 pairs per 183A1		2	2	3	7	14
	Number of 183B1 backboards, F/400 pairs per 183B1		1	1	2	4	7
	Number of 88AW1-100 wiring blocks, F/100 pairs per 88AW1-100		3	4	6	14	28
	Number of 88AW1-300 wiring blocks, F/300 pairs per 88AW1-300		1	2	2	5	10
RED	AA	Stations served from satellite closet	10	15	20	50	100
	G	Lines (AA/1 station per line = G)	10	15	20	50	100
	H	Number of conductor pairs in tie cable (G x R = H)†	40	60	80	200	400
	Number of 184A1 backboards, H/50 pairs per 184A1		1	2	2	4	8
	Number of 184B1 backboards, H/100 pairs per 184B1		1	1	1	2	4
	Number of 88BW1-25 wiring blocks, H/25 pairs per 88BW1-25		2	3	4	8	16
	Number of 88BW1-75 wiring blocks, H/75 pairs per 88BW1-75		1	1	2	3	6
HORIZONTAL CLOSET SPACE REQUIRED‡	$\frac{184A1 \times 8.5 + 8.5}{12}$		1.4	2.2	2.2	3.6	6.4
	$\frac{184A1 \times 17 + 8.5}{12}$		2.2	2.2	2.2	3.6	6.4
	$\frac{88BW1\text{-}25}{6} \times \frac{10.75}{12}$ §		0.9	0.9	0.9	1.8	2.7
	$\frac{88BW1\text{-}75}{2} \times \frac{10.75}{12}$ §		0.9	0.9	0.9	1.8	2.7

* Green and yellow backboards are usually not required in a satellite closet.

† R = (4 pairs/line) = 4 (in tie cable).

‡ Total required horizontal wall space is determined by the number of red backboards or wiring blocks to be used.

§ Raise this result to the next highest whole number. The 6 and 2 in the denominator result from a maximum of 6 (100 pairs) and 2 (300 pairs) wiring blocks per column.

TABLE G

INSTALLATION SEQUENCE – 180 SERIES BACKBOARDS

COLOR AND CODE	PROCEDURE
Green 183A2 or 183B2	First backboard Installed by construction forces in lower left corner 1 foot above floor. Horizontal location selected jointly by outside plant engineer and service foreman. Second backboard Above first backboard, bottom butted to first backboard.
Yellow 185A1‡	Above second GREEN backboard, bottom butted to GREEN backboard.
Blue 183A1 or 183B1	2 high — lower BLUE 1 foot from floor. Left side of the first two backboards (2-high) butted to GREEN backboards.
White 187B1*	Butt left side of first backboard to YELLOW; extend required number of backboards horizontally using only one row.
Red 184B1 or 184B2†‡	Top row: Butt left side of first backboard to YELLOW; extend required number of backboards horizontally using only one row. If inadequate horizontal space, place second row of RED above first row of RED. If inadequate height, place RED backboards in middle row, at end, inverted. Never place RED backboard in bottom row.

* Use with 184B2 backboard. See Fig. 9.

† Use with 187B1 backboard. See Fig. 9.

‡ Installations involving 600-series modular panels eliminate the need for some or all the backboards in the YELLOW and RED fields (see Fig. 18).

TABLE H

INSTALLATION PROCEDURE – 88-TYPE WIRING BLOCKS

CODE (NOTE)	PROCEDURE
88AW1-100 or 88AW1-300 (Green Field)	*First Wiring Block:* Installed by construction forces on the left side of the installation with the top of the block 55 inches above the floor. Horizontal location selected jointly by outside plant engineer and service foreman. *Second Wiring Block (if required):* Below the first wiring block; top butted to first block.
188A1 Backboard (White)	Directly above the first GREEN wiring block. Extend, as required, horizontally to the right using only one row.
88AW1-100 (Purple Field)	Purple field *if required* is butted directly above the WHITE backboard. YELLOW would then go above PURPLE.
88AW1-100 (Yellow Field)	Directly above the 188A1 WHITE backboard that is located above the GREEN wiring blocks. PURPLE, when required, is butted to the WHITE backboard.
88BW1-25 or 88BW1-75 (Red Field)	88BW1-25 may be 6 high and 88BW1-75 may be 2 high. Located above the 188A1 backboard and to the right of the YELLOW and/or PURPLE wiring blocks. Left side butted to YELLOW and/or PURPLE wiring blocks.
88AW1-100 or 88AW1-300 (Blue Field)	88AW1-100 may be 12 high and 88AW1-300 may be 4 high. Located below the 188A1 backboards and to the right of the GREEN wiring blocks. Left side butted to GREEN wiring blocks. The area below the GREEN wiring blocks may be used, particularly for tie cables.

Note: All wiring blocks are manufactured in white plastic. The color of the field is determined by the use of appropriately colored designation strips. See Table B.

TABLE I
JUMPERS USED IN A TYPICAL APPARATUS CLOSET WHICH DIRECTLY SERVES STATIONS

LINE PURPOSE	ARROW NO. (FIG. 23)	JUMPERS
CO/PBX	1	***2-conductor:*** from GREEN field (line pickup) to RED field (key equipment termination)
Key telephone button with basic line service	2	***6-conductor:*** from RED field (line service termination) to BLUE field (key telephone set termination)
	3	***2-conductor (for ringing):*** from YELLOW field (auxiliary apparatus) to RED field (key equipment termination)
Auxiliary and dial intercommunication service	4	***2-conductor:*** from YELLOW field (auxiliary apparatus) to BLUE field (key telephone set terminations)

Note: Use F cross-connect wire for jumpers.

TABLE J
JUMPERS USED IN AN APPARATUS CLOSET WHICH DIRECTLY SERVES TWO SATELLITE CLOSETS

LINE PURPOSE	ARROW NO. (FIG. 24)	JUMPERS
CO/PBX	1	***2-conductor:*** from GREEN field (line pickup) to RED field (key equipment termination)
Key telephone button with basic line service (to satellite closet)	2	***6-conductor:*** from RED field (line service termination) to BLUE field (tie cable termination) ***2-conductor (for ringing):*** from RED field (line service termination) to BLUE field (tie cable termination) or from RED field (line service termination to YELLOW field (auxiliary services) to BLUE field (tie cable termination)
Key telephone button with basic line service (in satellite closet)	3	***6-conductor:*** from RED field (line service termination) to BLUE field (station set termination) ***2-conductor:*** from RED field (line service termination) to BLUE field (station set termination)

Note: Use F cross-connect wire for jumpers.

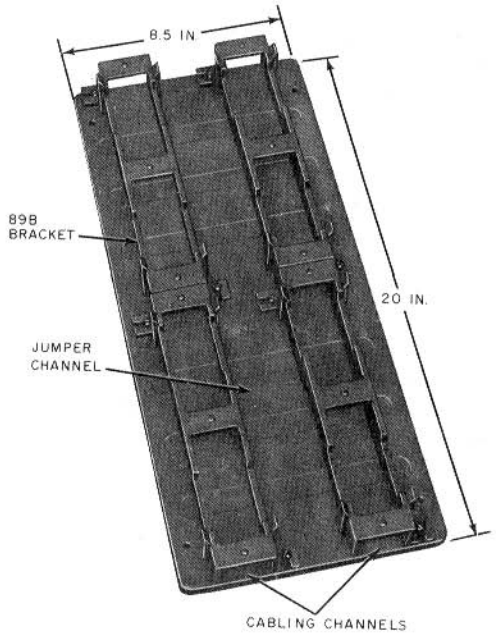

Fig. 1—183A-Type Backboard

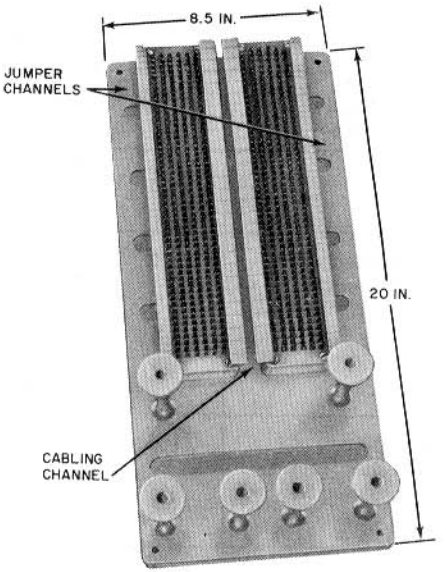

Fig. 3—184A1 Backboard

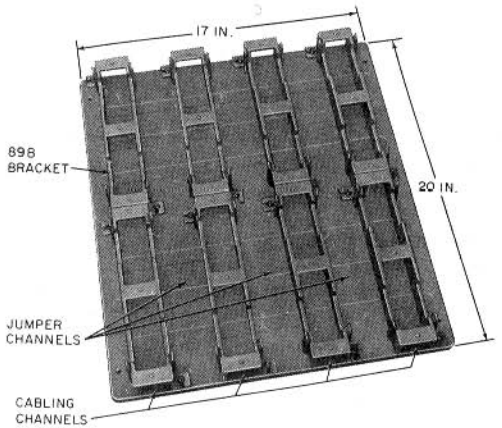

Fig. 2—183B-Type Backboard

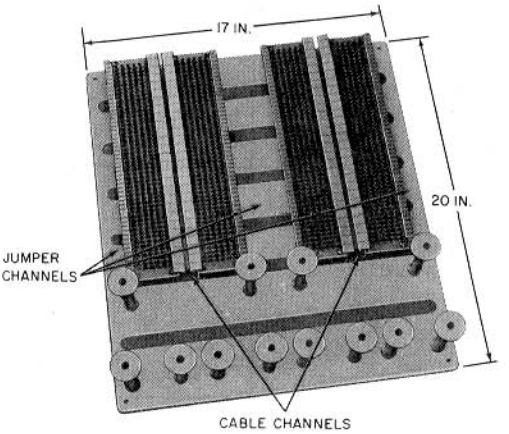

Fig. 4—184B1 Backboard

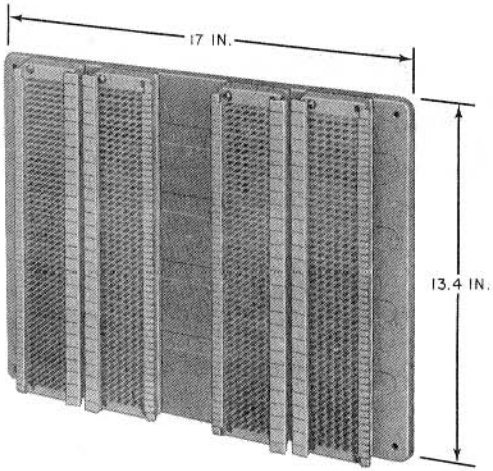

Fig. 5—184B2 Backboard

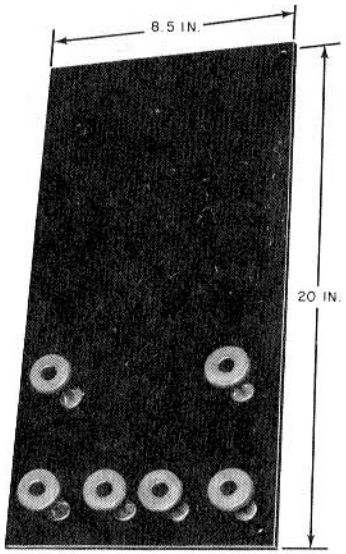

Fig. 6—185A1 Backboard

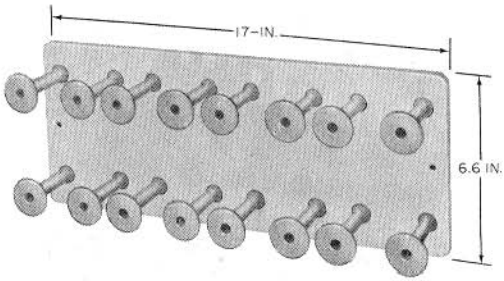

Fig. 7—187B1 Backboard

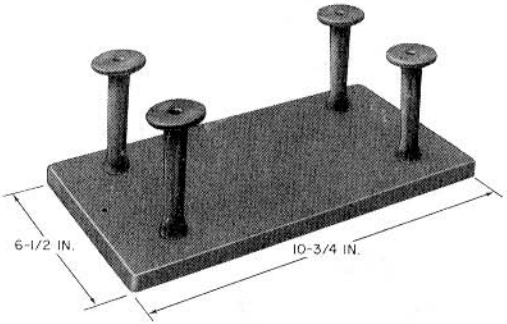

Fig. 8—188A1 Backboard

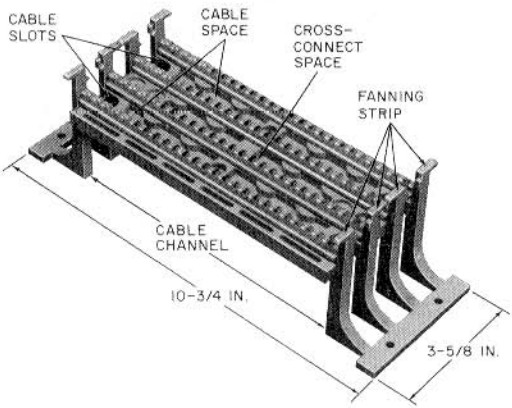

Fig. 9—88AW1-100 Wiring Block

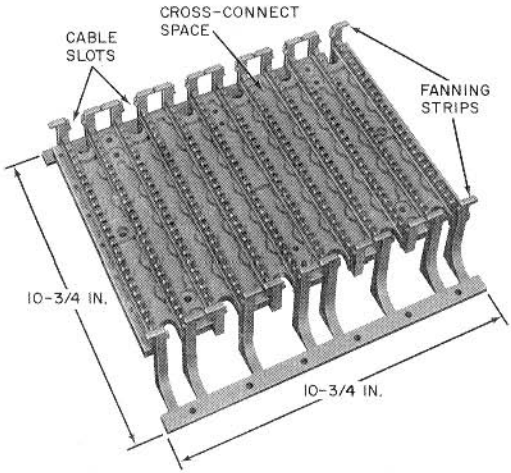

Fig. 10—88AW1-300 Wiring Block

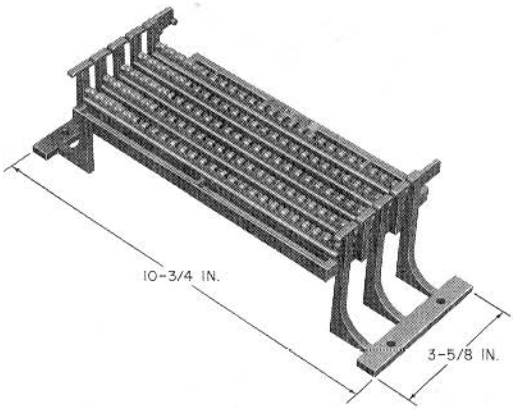

Fig. 11—88BW1-25 Wiring Block

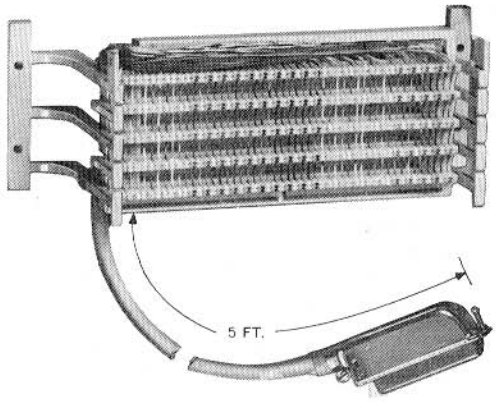

Fig. 12—88BW1-25C Wiring Block

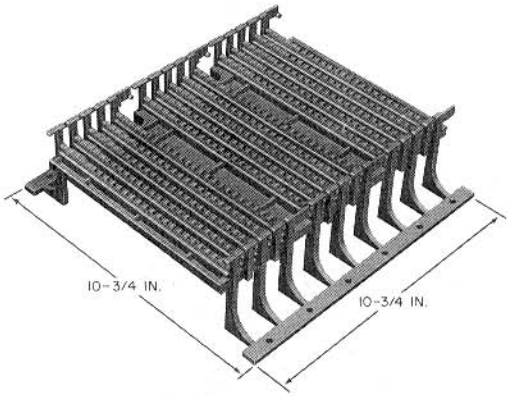

Fig. 13—88BW1-75 Wiring Block

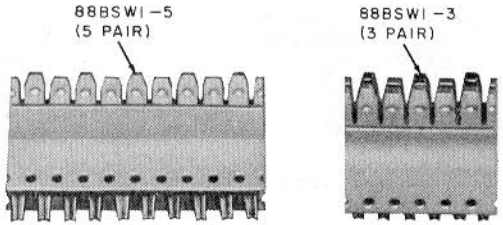

Fig. 14—88BSW1-5 and 88BSW1-3 Connecting Blocks

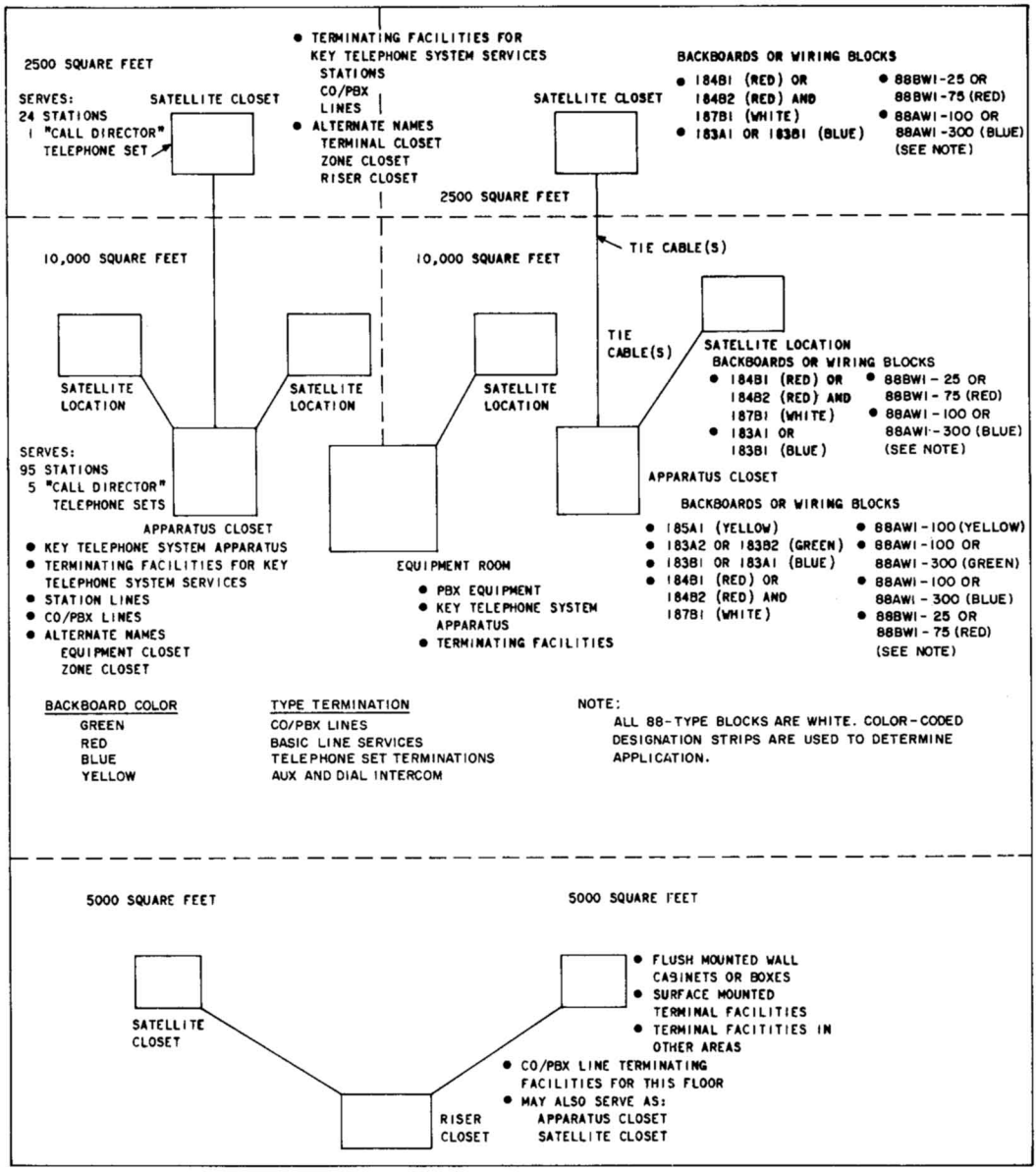

Fig. 15—Typical Floor Plan Showing Specific Telephone Closet Function and Relation

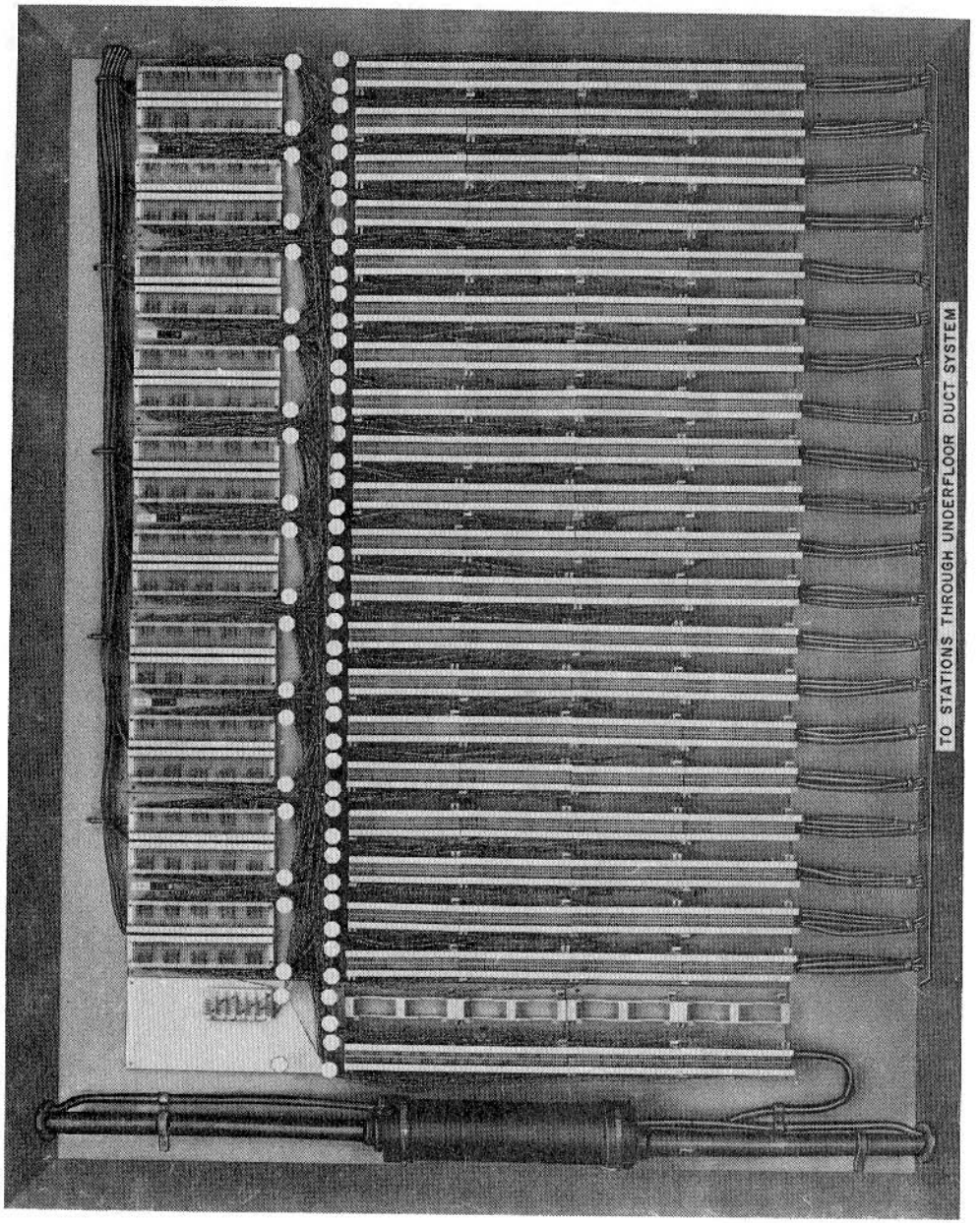

Fig. 16—Typical Apparatus Closet Arrangement Using Modular Apparatus

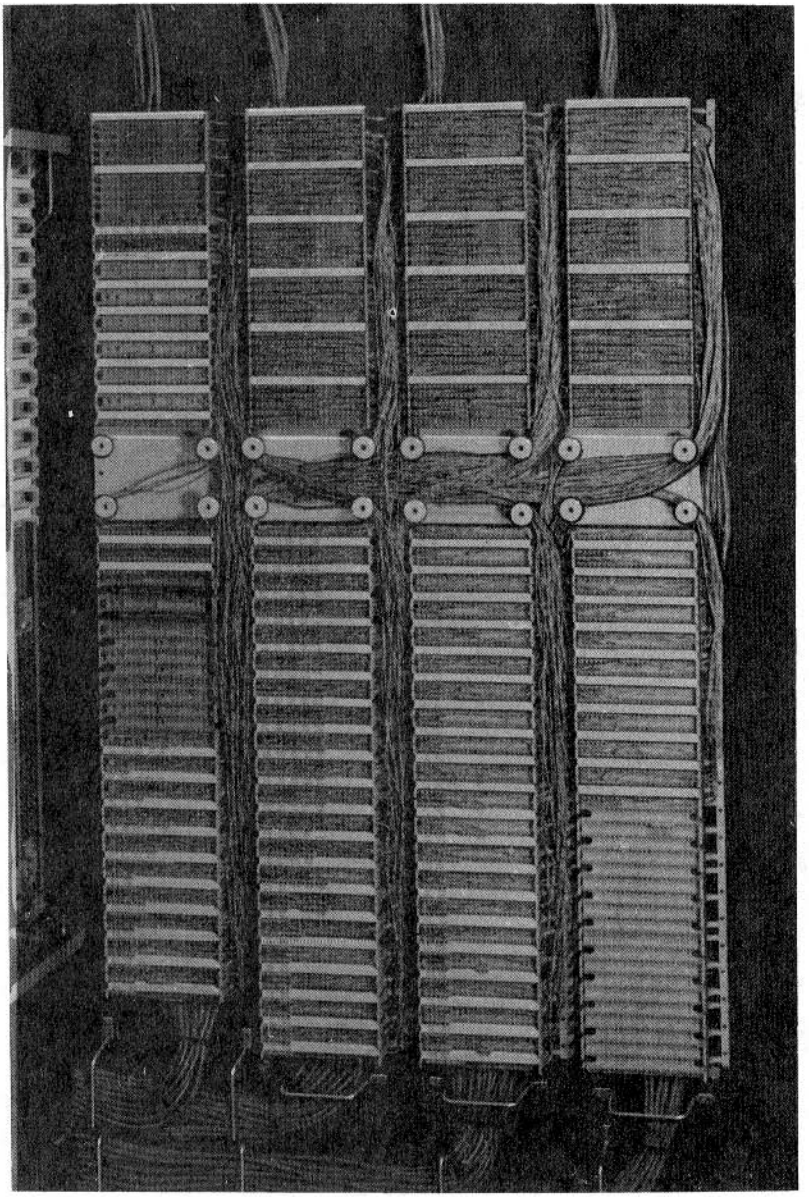

Fig. 17—Typical Apparatus Closet Arrangement Using 88-Type Wiring Blocks

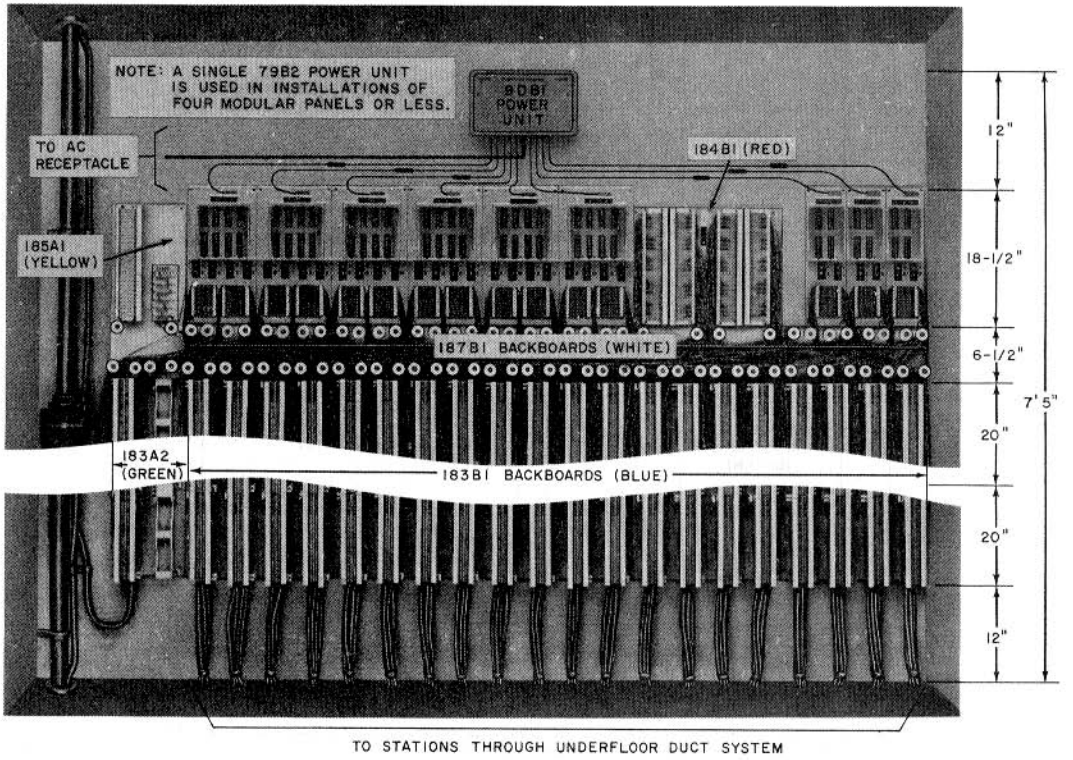

Fig. 18—Typical Centralized Terminal Field Arrangement Using 180-Type Backboards, 66-Type Connecting Blocks, and 600-Series Modular Panels

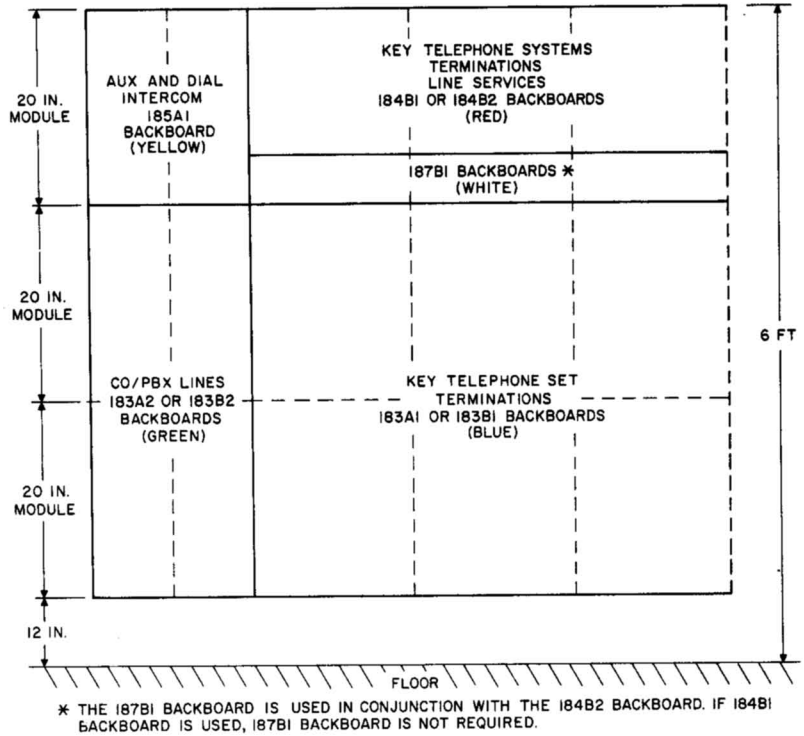

Fig. 19—Apparatus Closet, Basic Pattern, Using 180-Type Backboards

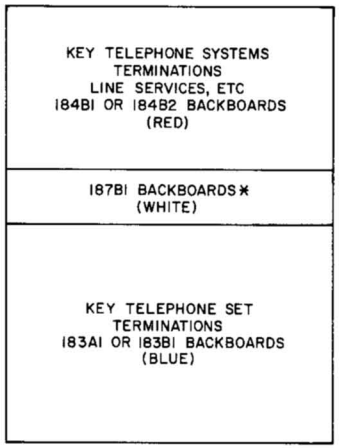

* THE 187BI BACKBOARD IS USED IN CONJUNCTION WITH THE 184B2 BACKBOARD. IF 184BI BACKBOARD IS USED, 187BI BACKBOARD IS NOT REQUIRED.

Fig. 20—Satellite Closet, Basic Pattern, Using 180-Type Backboards

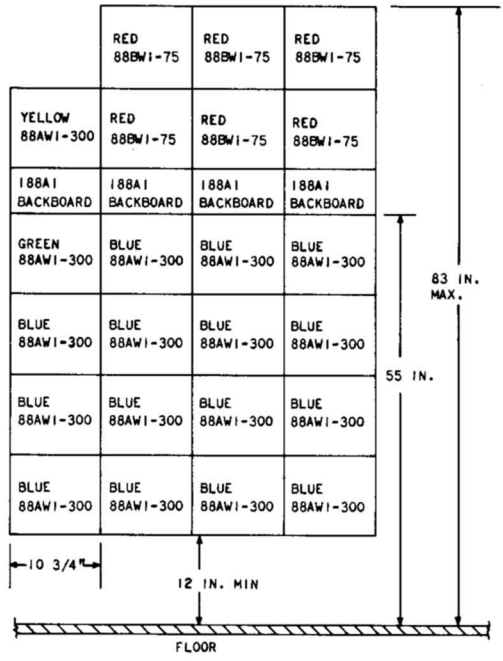

NOTE:
FOR SATELLITE CLOSET, DELETE GREEN AND YELLOW WIRING BLOCKS. THIS ARRANGEMENT WILL SERVE 180 KEY STATIONS.

Fig. 21—Apparatus Closet, Basic Pattern, Using 88-Type Wiring Blocks—Horizontal Arrangement

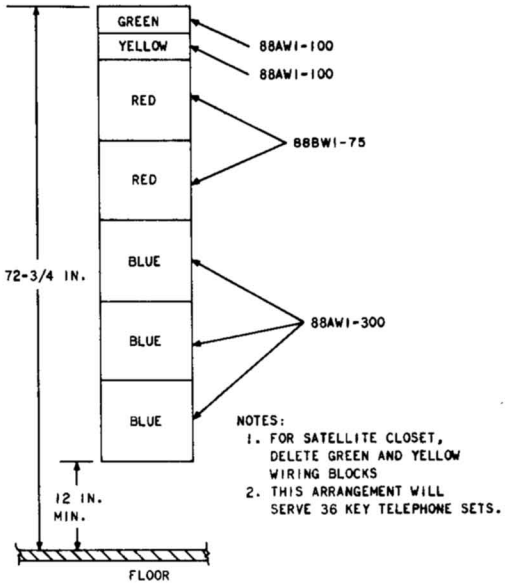

Fig. 22—Apparatus Closet, Basic Pattern, Using 88-Type Wiring Blocks—Vertical Arrangement

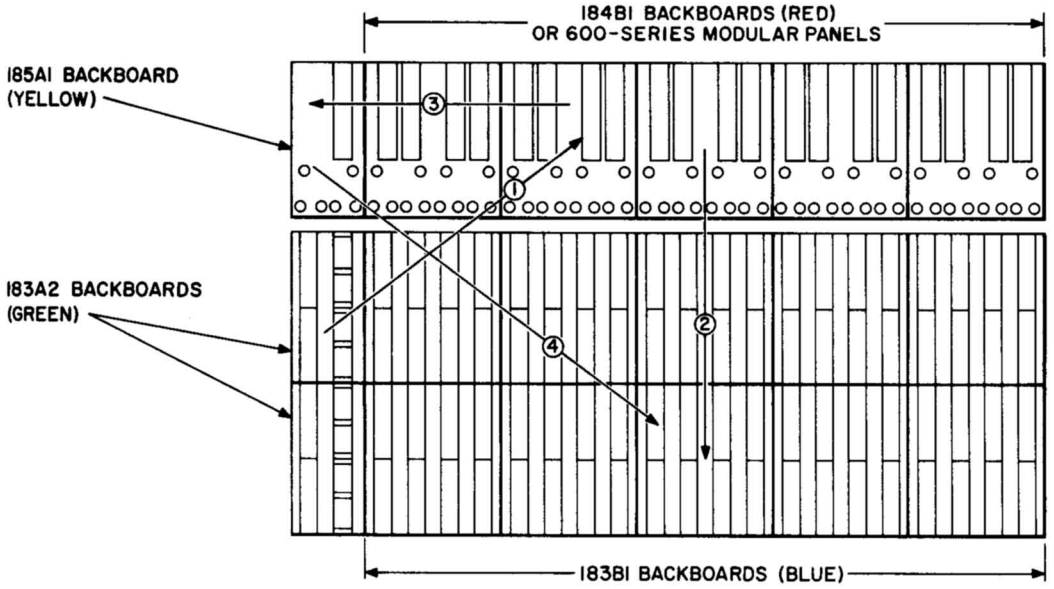

NOTE:
THESE JUMPER PATTERNS ALSO APPLY
TO 88-TYPE WIRING BLOCKS.

Fig. 23—Jumper Patterns for an Apparatus Closet Which Directly Serves Stations

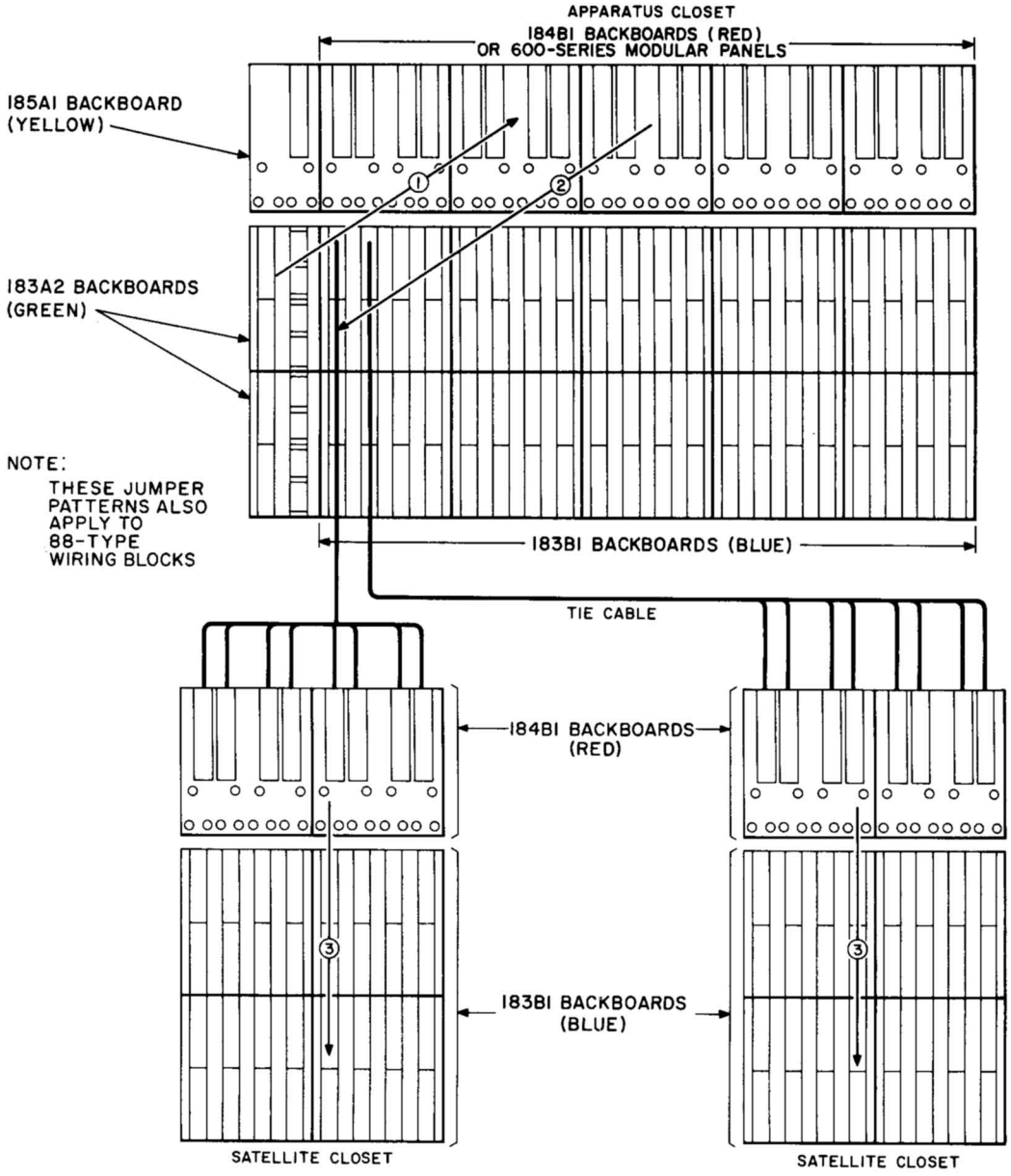

Fig. 24—Jumper Patterns for an Apparatus Closet Which Directly Serves Two Satellite Closets

KEY TELEPHONE SYSTEM

GROUNDING AND SPECIAL PROTECTION REQUIREMENTS

1. GENERAL

1.01 This section contains information on grounding and protection applicable to Key Telephone System (KTS) installations. It is intended to provide general background knowledge needed by the installer. More detailed coverage of related equipment and procedures can be found in Section 460-100-400, Protection and Grounds.

1.02 This section is a complete revision of Issue 1 and provides information that is more usable and easier to understand.

1.03 The terms listed below are defined here with respect to their specific usage in this section:

(a) ***Ground***—The arbitrary zero reference point for an electrical potential. A large conducting body, such as the earth, used as a common return for an electrical circuit. Ideally, earth ground provides a zero-voltage level.

(b) ***Building Ground***—An acceptable ground connection provided by building construction steel in contact with earth ground or a bare copper wire encased in concrete building footing.

(c) ***Cold Water Pipe Ground***—An acceptable ground connection provided by a continuous buried metal pipe with at least 10 feet of length in moist earth and carrying cold water into the building where the KTS is installed.

(d) ***Multigrounded Neutral (MGN) System***—A grounded commercial power distribution system in which the neutral wire is grounded at frequent intervals along the distribution system. MGN service is now in common use and usually provides a good ground point for a KTS.

(e) ***Transient Voltage***—A high-level voltage pulse of short duration and irregular waveshape such as might be induced into a telephone or power line by lightning activity or in power lines by load switching.

(f) ***Surge Current***—Sudden high current caused by a transient voltage.

(g) ***Potential***—Voltage difference between two circuit points.

(h) ***Circuit Ground***—In KTS power supplies, the positive side of the dc output; the reference point for the negative output voltages and the return path for grounded signaling. Physically, it is the terminal labeled "LOC GRD", "GRD", or "G".

(i) ***Frame Ground***—The path through which the frame, case, or chassis of the KTS power supply is connected to the commercial power service ground; "green wire" ground conductor in the power cord. Holds frame at near zero potential if ac power is accidentally shorted to power supply frame. ***Not*** the same as circuit ground.

(j) ***Entrance Conduit***—The conduit which carries the power service cable from the point of building attachment to the service entrance box where it is fused and distributed.

(k) ***Branch Conduit***—The conduit which carries branch power circuit wiring from the service entrance box to outlet points or secondary service boxes within the building.

(l) ***Potential Equalization***—A means for maintaining two or more circuit points at approximately same potential; usually achieved by bonding points or by providing a single connection point for all circuits involved.

(m) ***High-Rise Building***—A multistory building utilizing structural steel and/or reinforced concrete construction. Separate KTS installations may be located on any or all floors.

2. BASIC PROTECTION REQUIREMENTS

2.01 Station protection is always required where telephone or power lines are exposed to

NOTICE
Not for use or disclosure outside the
Bell System except under written agreement

lightning-induced transients. Protection is also required when outside plant telephone facilities (cable, open wire, drops, etc) are exposed to possible contact with 300-volt (or higher) power line circuits. ***Therefore, all KTS installations shall be grounded and protected in accordance with this practice unless otherwise specified by local instructions.***

2.02 Unprotected telephone equipment can also be damaged in lightning areas even though both the telephone and power lines are entirely buried. In this case, damage can occur when a lightning stroke causes the earth ground associated with an installation to rise with respect to the central office (CO) ground.

2.03 ***KTS installations usually require station protection in lightning areas regardless of power exposure of the telephone plant.*** This condition is discussed in more detail in Part 4 of this practice. Briefly, however, the key station must be protected from the voltages that can be developed between any two ground points. These ground points include the KTS power supply ground, the commercial power ground, the station protection ground, and the CO or PBX ground. ***It is strongly recommended that protection of KTS lines always be considered in areas where thunderstorm activity can occur.*** The lack of such protection can result in damage to and failure of circuit pack and power supply components. Fig. 1 illustrates a typical installation protected and grounded according to the requirements presented here.

2.04 For detailed information on protector selection, ground rod installation methods, hardware, etc, refer to Section 460-100-400.

2.05 This practice outlines grounding and protection arrangements that will satisfy the requirements for most installation situations. Illustrations of both good and poor grounding methods are shown, but involved theoretical explanations have been avoided. Situations not adequately covered by this information should be referred to the responsible local supervisor or designated company representative.

2.06 ***High-Rise Buildings:*** The material in this practice applies equally as well to KTS installations in high-rise buildings as it does to smaller structures. It is recognized, however, that special problems may be encountered in the location of satisfactory grounding points in high-rise buildings. Ideally, a specific telephone ground is provided on each floor during construction; this ground should be located and used. Otherwise, proper grounding must be accomplished through the methods presented in this practice.

2.07 In exposed areas do not install KTS equipment where the necessary station protection grounding cannot be provided (ie, if access to the water system or power ground is not possible and a ground rod cannot be driven). Advise the local supervisor or designated company representative of the situation as soon as possible.

3. BASIC PROTECTION THEORY

Carbon Block Operation

3.01 An electrical current will arc across a gap (an air space) in a circuit when a specific level of voltage is impressed across the circuit points that form the gap. Station-type carbon block protectors utilize this arcing action to limit foreign potentials on telephone lines.



Station protectors must be equipped with 3-mil carbon blocks (white blocks). Do not use blue or yellow blocks.

The 3-mil blocks will arc over at a peak voltage of about 600 volts.

3.02 The effect of a protector with 3-mil carbon blocks on a typically high-voltage waveform is illustrated in Fig. 2. The blocks operate on either positive or negative voltage peaks that exceed the firing point of the gap (approximately 600 volts in this example).

3.03 The waveform in Fig. 2 can represent any high-voltage condition that can develop on telephone lines, for example, lightning surges, switching transients, power crosses, etc. In any case, the carbon blocks arc over as the voltage level reaches point A. The current flow associated with the foreign voltage will be shunted to ground via the arc path; the voltage on the station telephone line, with respect to the protector ground terminals, will be equal to the voltage drop across the carbon blocks (usually less than 50 volts). These conditions will be maintained, as illustrated by dark shading, until the voltage is reduced to the level indicated by point B. In other words, the arc is sustained

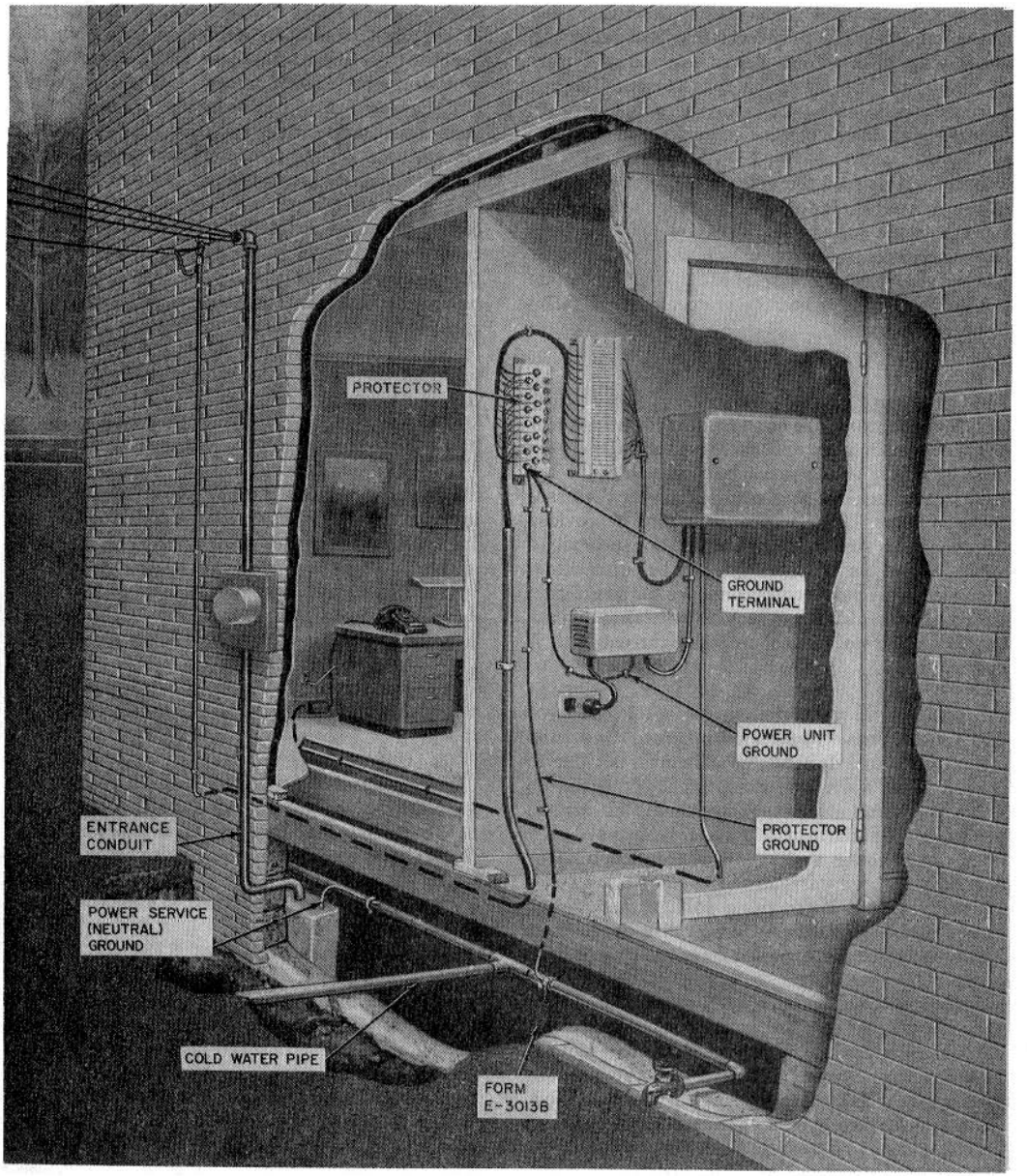

Fig. 1—Properly Grounded 1A2 Key Telephone System

and the line is held near ground potential until the voltage declines to a level that will cause the arc to extinguish. Point B was selected as typical of most low energy transients for illustration purposes only; this point can vary considerably depending on the amount of current involved.

3.04 That part of the waveform between points A and B, indicated by the dashed line, represents the voltage levels that would have been impressed across station apparatus (line circuits, power supply, telephone sets) had station protection not been provided or had the protector blocks failed to operate properly.

3.05 ***Power Crossed with Telephone Line:*** Protectors are also required to protect telephone equipment and customer premises from primary power voltages that can become connected to the telephone line as a result of physical crosses between lines. This electrical protection is provided in a manner similar to the operation described above, except the telephone line will be permanently grounded if the power cross continues for a sufficient period of time. Thus, protectors will safely bypass large currents to ground until the current path is opened.

3.06 ***Gas Tube Type Protectors:*** Gas tube protectors function in a manner similar to carbon block operation, except that the tubes do not always fail in the shorted mode as carbon blocks do. (Failure of a protector means that it does not recover to its normal condition after carrying a surge current to ground.) Gas tubes generally have a lower firing voltage than carbon blocks and a considerably longer life expectancy. However, they are expensive and do not provide a greater degree of line protection. Therefore, gas tubes are to be used only when locally authorized; they are usually installed in areas where excessive carbon maintenance is required due to frequent thunderstorm activity. However, the present generation of gas tubes may fail in the open mode (ie, not be able to bypass another surge to ground) and should not be used in place of carbon blocks, but rather, in addition to them, strictly to reduce maintenance visits. This arrangement will insure that the line will continue to be protected in the event of a tube failure. (The 123B1A protector provides carbon blocks and gas tubes in a parallel arrangement.)

3.07 ***Fuseless and Fused Protectors:*** Telephone plant is usually arranged in a way that permits the use of fuseless protectors. These protectors provide only carbon block-type protection, but they are capable of handling large currents. It is necessary, however, that fusible links be located between the protectors and possible power contact points to justify use of fuseless protectors. This is usually accomplished by providing a length of fine gauge (finer than the cable or drop facilities) cable pairs or jumper wires between CO lines and the station drop. For example, a fusible link can be provided by connecting a terminal to a 22-gauge cable with a length of 24- or 26-gauge cable. The length of finer cable acts as a fuse and will burn open before power levels exceed the rated capacity of the protectors.

3.08 Fused protectors are necessary under certain conditions, usually where a fusible link is not installed and the station protection is located inside a building. The following conditions require the application of fused protectors.

(1) The station is served by open or rural wire, the power system is not MGN, and the power neutral is not grounded to a water pipe.

(2) The station is served by open or rural wire and no bridle wire fusible link is provided.

(3) Underground service wire is connected by encapsulated splices to 19- or 22-gauge buried cable that is jointly buried with power lines. Where this condition exists, a fused protector should be specified on the service order.

4. DESCRIPTION OF REQUIRED KTS PROTECTION

4.01 Improper protection of KTSs can result in station equipment damage that may require frequent visits to station locations for the purpose of replacing defective line equipment, power supplies, lamps, and fuses. Damage of this type is usually caused by lightning or power-induced voltage transients. A good protection system can substantially reduce these problems.

4.02 A telephone station protection system consists of protection equipment and wiring that permits only relatively small voltage differences to develop between telephone equipment and other electrical equipment or grounded building fixtures when either lightning or power surge current is

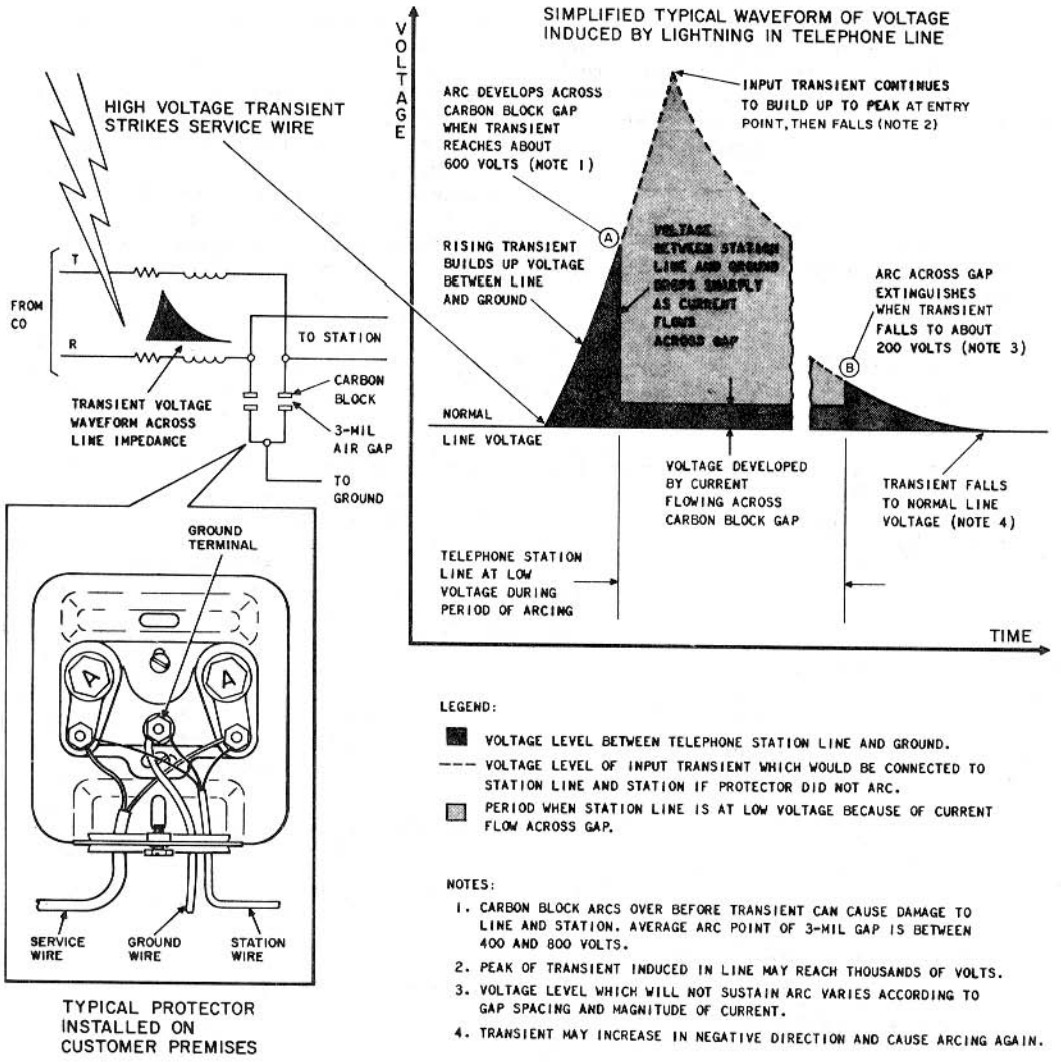

Fig. 2—Carbon Block Action on Telephone Line Hit by High-Voltage Transient

flowing. The primary danger of allowing high-voltage levels to develop between ground points is that current can arc across from one circuit to another if the potential difference becomes sufficiently high. This flow of current can damage equipment.

4.03 KTS protection usually consists of basic telephone line protection (standard fused or fuseless protectors) connected to an acceptable ground point. Fig. 3 illustrates a typical KTS grounding arrangement that meets protection requirements if installed properly. Note that all grounded points are connected to the cold water pipe either directly or by way of a bond wire. Utilization of the same ground point limits the level of potential differences that can develop

between system ground points. The water system was chosen as the system ground in the example of Fig. 3, but the common system ground could be building steel, footing ground, power service ground rod or telephone company ground rod, depending upon the local job situation.

4.04 In the following paragraphs, the various components and connections of the arrangement in Fig. 3 will be discussed in detail. The basic principles involved can be applied to most KTS installations.

4.05 ***Telephone Line Protector:*** The protector should be located as near as possible to the cable or drop entry point within a building. The protector ground wire should be routed to the nearest acceptable ground available (see 4.06). The size of the protector ground wire depends upon the type and number of protectors involved in the KTS installation (refer to table in Fig. 3).

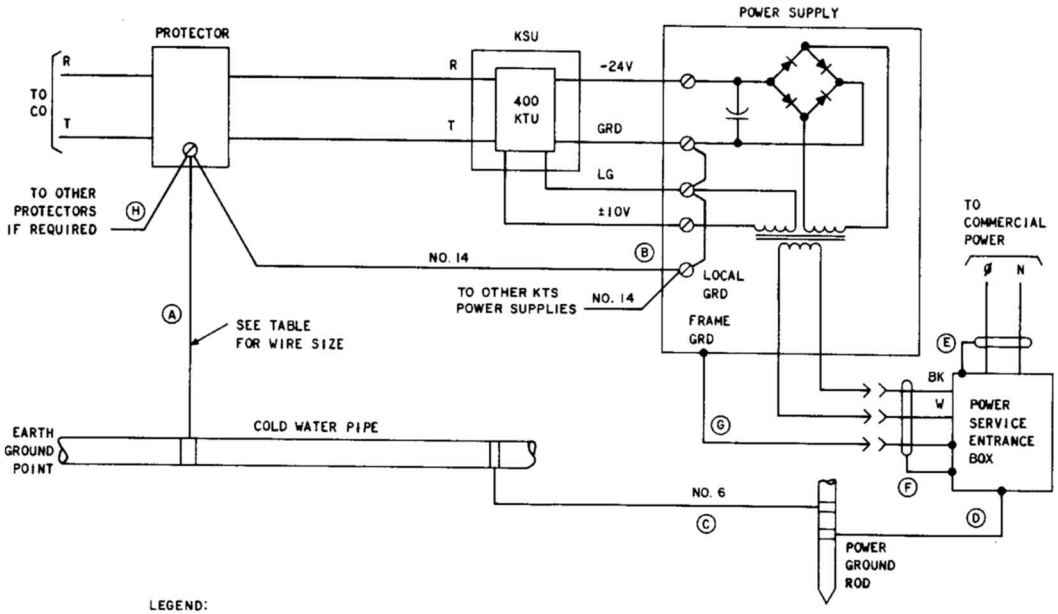

LEGEND:

Ⓐ PROTECTOR GROUND (PRIMARY KTS GROUND).

Ⓑ POWER SUPPLY LOCAL GROUND (CIRCUIT GROUND) - PROVIDES FOR POTENTIAL EQUALIZATION BETWEEN TELEPHONE LINE AND POWER SUPPLY.

Ⓒ GROUND WIRE BOND REQUIRED TO EQUALIZE KTS AND POWER SERVICE GROUNDS. THIS BOND MUST BE INSTALLED BY TELEPHONE COMPANY IF NOT ALREADY PROVIDED. BOND CAN BE CONNECTED, ON POWER SIDE, TO A DIFFERENT SERVICE GROUND POINT THAN SHOWN (FOR EXAMPLE, ANYWHERE ALONG GROUND WIRE Ⓓ OR TO SERVICE ENTRANCE CONDUIT Ⓔ).

Ⓓ POWER SERVICE GROUND WIRE.

Ⓔ POWER SERVICE ENTRANCE CONDUIT.

Ⓕ POWER SERVICE BRANCH CONDUIT - NOT ACCEPTABLE GROUND POINT FOR TELEPHONE EQUIPMENT.

Ⓖ GREEN WIRE GROUND - CONNECTS FRAME GROUND OF POWER SUPPLY TO POWER SERVICE GROUND BY WAY OF GROUND PRONG IN THREE-PRONG PLUG. NEVER CUT OFF GROUND PRONG TO FIT TWO-PRONG OUTLET; USE ADAPTER DESCRIBED IN PARAGRAPH 4.08.

Ⓗ BOND BETWEEN PROTECTORS. GROUND WIRE BETWEEN PROTECTORS SHOULD BE SAME SIZE AS GROUND WIRE Ⓐ.

GROUND WIRE CAPACITY

SIZE	NO. OF PROTECTED CKTS	
	FUSELESS	FUSED
NO. 14	1	3
NO. 12	2	6
NO. 10	6	7
NO. 6	7 OR MORE	8 OR MORE

NOTE:
WIRE BETWEEN PROTECTORS SHALL BE SAME SIZE AS WIRE BETWEEN PROTECTOR AND GROUND.

Fig. 3—Typical KTS Grounding Arrangement

Ground Selection

4.06 Selection of an acceptable point for connecting the protector ground wire is of the utmost importance in achieving a well-protected installation. The protector ground serves as the primary KTS ground reference point. The flow chart in Fig. 4 is designed to help the installer identify the best choices of ground available in most job situations. The decision blocks contain questions regarding the installation conditions, the responses to which will lead to selection of an acceptable ground. The flow chart should be followed until the last block in the path is reached. The referenced notes and figures provide additional information and illustrations of actual installation procedures.

4.07 It may sometimes be difficult to decide whether a ground point is acceptable or not, and the installer will have to rely on his experience and judgment. In general, a ground point is ***unacceptable*** if it does not make good contact with earth ground. The definitions in 1.03 are a practical guide to selecting the right ground, in conjunction with the use of the flow chart. The following points must also be considered:

- No one type of grounding system—power service, cold water pipe, or building—should be regarded as basically superior to another. However, an ***MGN power system*** can usually be counted on for good grounding while the others may be difficult to verify.

- A metallic cold water pipe is acceptable ***only*** if it is known to meet the requirements of 1.03(c).

- Plastic pipe is ***always unacceptable.*** Furthermore, even if the interior cold water pipe is metallic, it is possible that the buried service pipe is plastic.

- Insulating joints or sections are often installed in private water systems to reduce noise and vibration from pumps. They make metallic pipe ***useless*** for grounding unless they are bonded across to buried metallic pipe, or unless the pipe is bonded to another acceptable ground.

- In cases where more than one acceptable ground is available, route the protector ground wire as directly as possible to the nearest one.

- Always verify that when the ground sources used for the commercial power service ground and the telephone protector ground are different, they are bonded together.

KTS Power Supply Local Ground (Circuit Ground)

4.08 After the protector ground wire (A in Fig. 3) has been connected to the best available ground (a cold water pipe in the typical situation shown in Fig. 3), the power supply output circuit (or local) ground must always be connected to the protector ground terminal. This connection (B) provides a necessary ground for the power supply and also insures that the power supply and protector ground reference points will be at the same potential under all surge conditions. The connection should be made with wire no smaller than 14-gauge. Route ground wire (B) as physically close as possible to the telephone lines between the protector and the key service unit (KSU). This will increase electrical coupling between the telephone lines and the ground wire which, in turn, reduces the potential difference between them and helps prevent arcing. In the case where several power supplies are used, strap the ground terminal of each supply (with a 14-gauge wire) to the ground terminal of the one that is connected to the protector ground.



Never use branch electrical conduit (F) as the ground point for the power supply local ground (B). Branch conduit is totally unacceptable as a KTS ground because good electrical continuity usually cannot be guaranteed, the actual connection between the conduit and earth ground can be difficult to identify, and branch conduit runs usually involve unknown distances to ground.

4.09 ***KTS Power Supply Frame Ground:*** The case or framework of the power supply is normally grounded through the ac green wire circuit (G in Fig. 3). The green wire connects to the power service ground by way of the power supply cord, the ground prong of the power cord plug, and the mating connector of a 3-conductor power outlet. If only a 2-conductor power outlet is available and the outlet box is known to be grounded, a Hubbell BL12433 adapter (or equivalent) may be

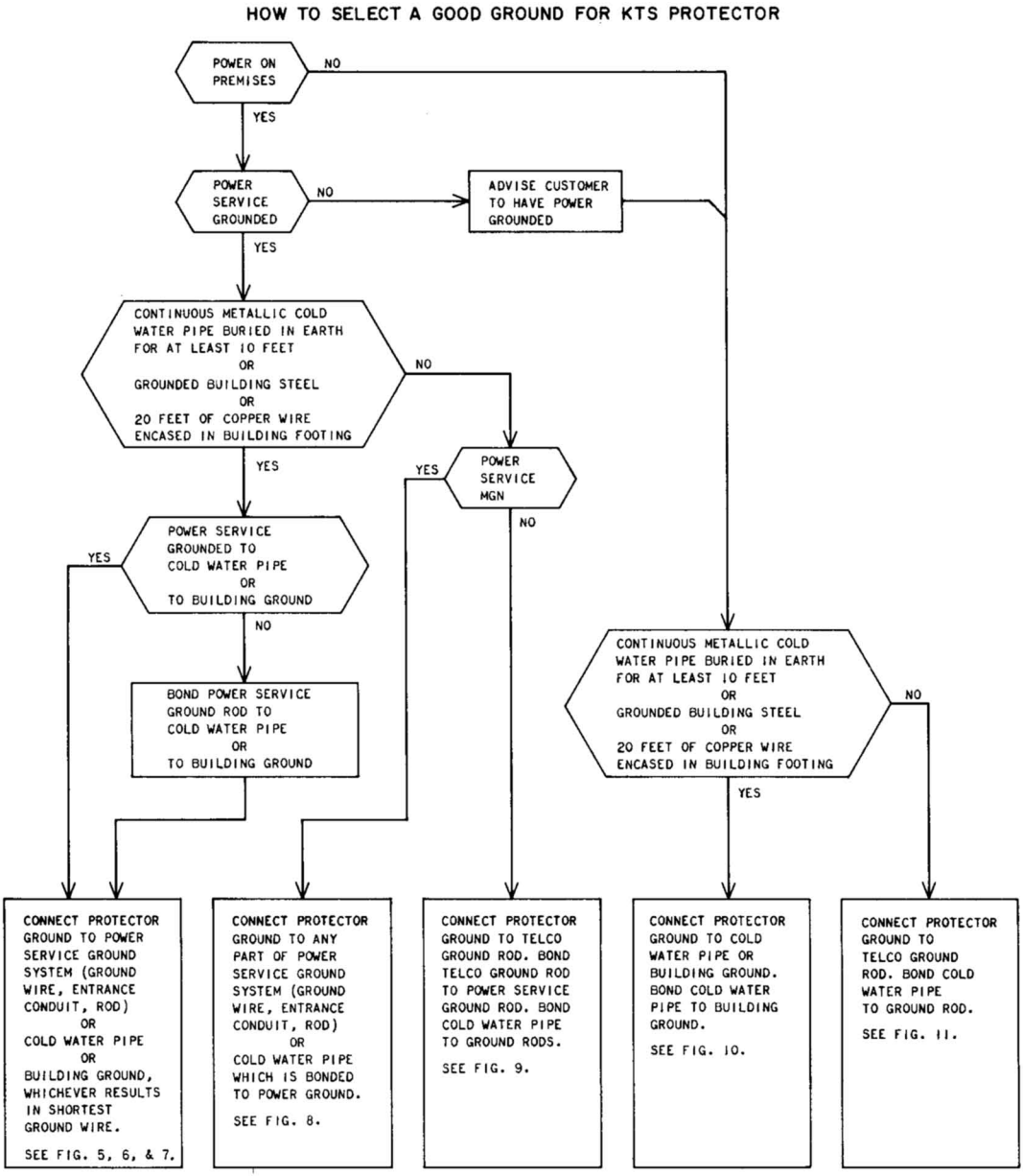

Fig. 4—Protector Ground Selection

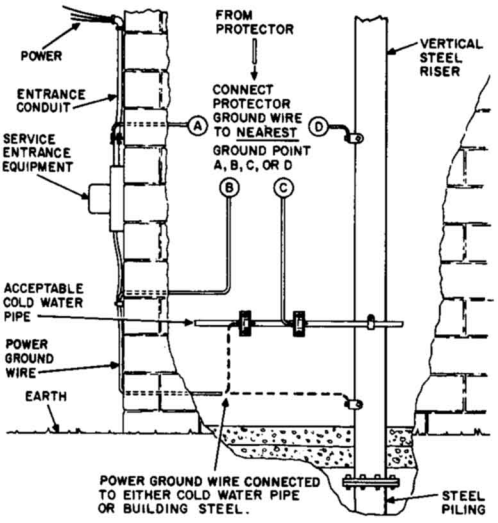

Fig. 5—Acceptable Water System or Building Ground—Power Service Grounded to Cold Water Pipe or Building Steel

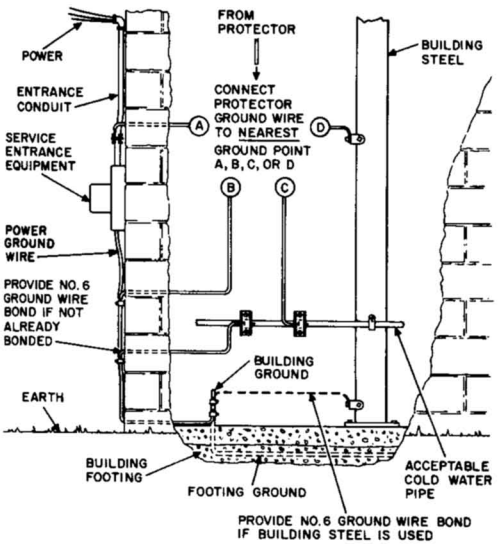

Fig. 6—Acceptable Water System or Building Ground—Power Service Grounded to Building Ground

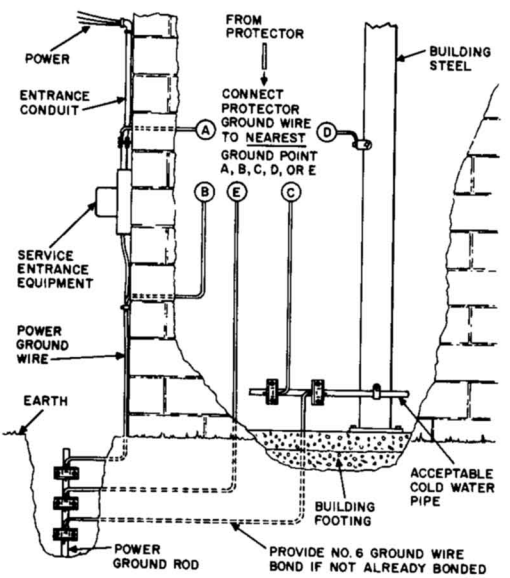

Fig. 7—Acceptable Water System—MGN Power Service Grounded to Ground Rod

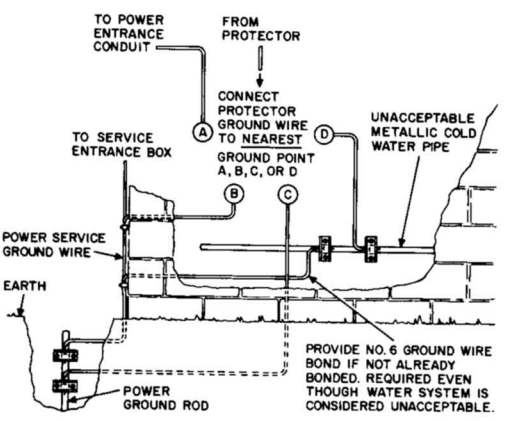

Fig. 8—Acceptable Water System or Building Ground Not Available—MGN Power Service Grounded to Ground Rod

used to match the 3-prong plug to the outlet. When the available power outlet box is not grounded, the framework ground of the power supply must

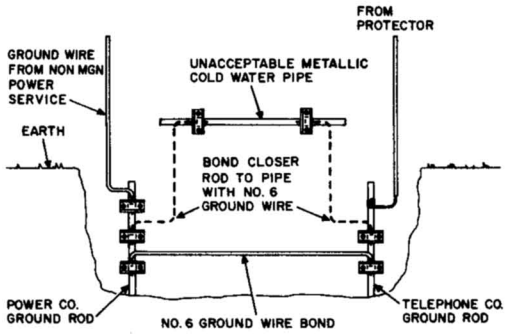

Fig. 9—Acceptable Water System or Building Ground Not Available—Non-MGN Power Service Grounded to Ground Rod

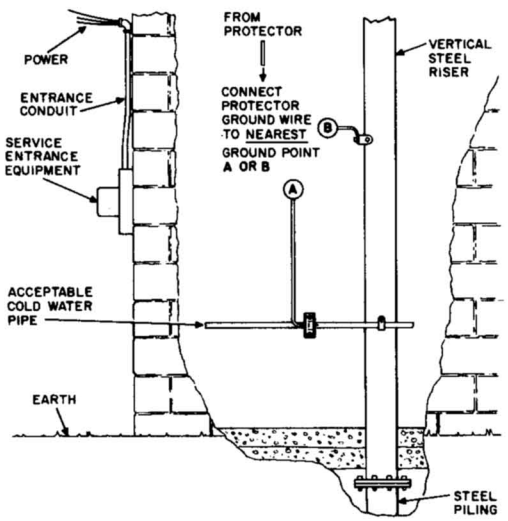

Fig. 10—Acceptable Water System or Building Ground—Power Service Not Grounded

be directly connected to the nearest acceptable system ground point through a 14-gauge, or larger, wire.

Caution: Never modify the power supply plug by cutting off the ground prong to adapt it for use with a 2-conductor outlet.

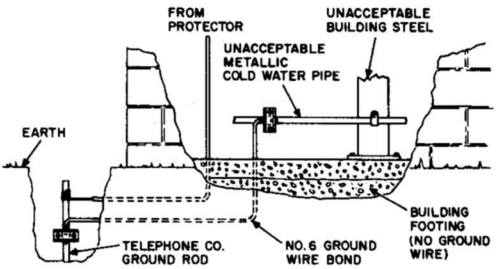

Fig. 11—Acceptable Water System or Building Ground Not Available—Power Service Not Grounded

4.10 ***Power Service Ground:*** The power service ground wire (D in Fig. 3) is connected directly to a power system ground rod. The power service and the KTS should always share a common ground source; this can be accomplished by bonding the two grounds together with No. 6 wire (C). If the power company has not already bonded their power ground rod to the ground selected for the KTS, the telephone company must do so as part of the KTS installation.

5. OPERATION OF A GOOD PROTECTION SYSTEM (Fig. 12)

5.01 The operation of a properly protected KTS can be described by considering what happens when a high-voltage transient enters a telephone line as a result of a lightning stroke.

5.02 Fig. 12 shows a typical lightning surge entry into a telephone line associated with a properly protected KTS. The red arrows show the directions in which current can flow from the entry point to earth ground. The path toward the CO is usually high impedance due to the cable length involved, and only a relatively small current flows in that direction. High-current levels do flow, however, toward the telephone station since the impedance is significantly lower. The current flows through the drop wire and across the carbon block air gaps (as described in 3.02) to the water pipe. The current flow continues through the pipe system until the energy is finally dissipated into the earth.

5.03 Meter M1 (a symbolic way of showing the magnitude of the voltage difference between

points) indicates that the voltage difference between the KTS protector ground and the power service ground is minimal; they are connected to the same water pipe. Therefore, since the KTS power supply ground is connected to the protector ground, the voltage between the power supply and the commercial power service is small, and the possibility of internal arcing between circuits is eliminated.

5.04 Meters M2 and M3 indicate that a small voltage difference, equal to the firing voltage of the carbon blocks, does develop between the telephone line and both the KTS power supply and the commercial power service. However, its maximum peak is not high enough to cause arcing from one circuit to another.

6. KTS INSTALLATIONS EXPOSED TO SURGE DAMAGE DUE TO IMPROPER GROUND CONNECTIONS

Protector Grounded to Ground Rod (Fig. 13)

6.01 Fig. 13 illustrates an installation similar to the one shown in Fig. 12, except a ground rod rather than a water pipe was provided as the protector ground. The difference between these two installations might seem trivial at a glance, but a more detailed evaluation of the possible effects will demonstrate that a vast difference in protection capability can actually exist.

6.02 As was the case in Fig. 12, the protector blocks will operate and surge currents will flow toward earth ground by way of the protector ground. However, because the current must flow through the ground wire and ground rod, a high-voltage difference (possibly several kilovolts) can develop between the protector ground terminal and the water pipe system (meter M1). Since the line side of the protector is at approximately the same potential as the ground side while the carbon blocks are conducting, the telephone line potential (M2) above the power supply local ground (which is connected to the water pipe ground) will be almost the same as that indicated by M1. Meter M3 shows that the same potential difference also exists between the telephone line and the commercial power leads.

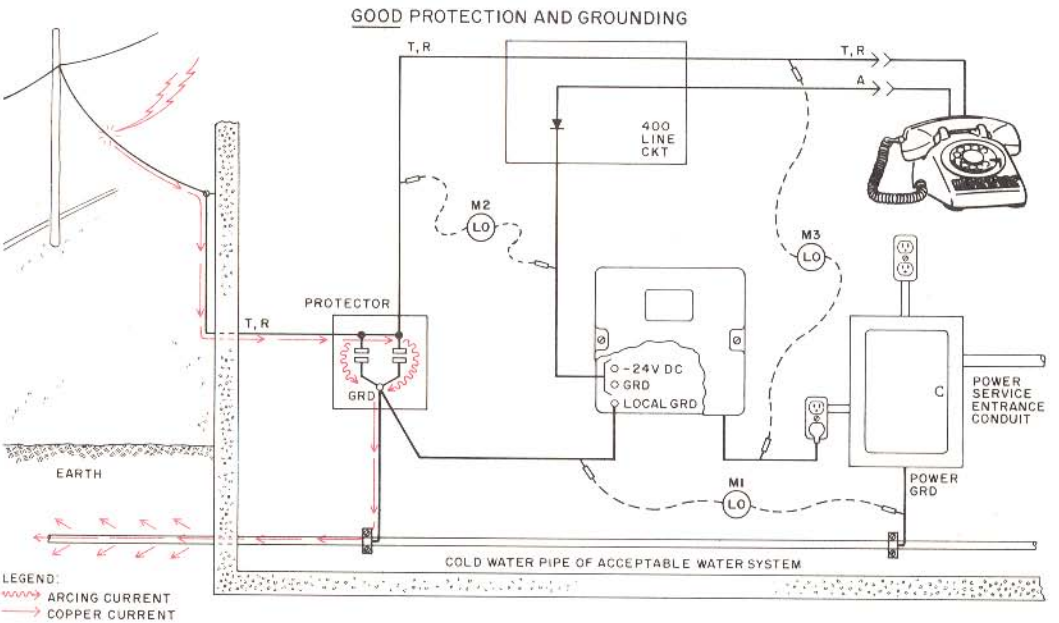

Fig. 12—All Grounds Bonded to Cold Water Pipe

6.03 The red arrows show how current can flow toward the water pipe ground if sufficient potential is present to arc from the telephone line to another circuit path. For example, an arc can develop between the telephone leads and the power supply leads on a 400D KTU printed wiring board at about 2 kilovolts. Therefore, in the case illustrated by Fig. 13, KTU component damage is most likely to occur as a result of surge current flow from the telephone line to the power supply ground (cold water pipe) through KTU components.

6.04 A surge current that enters a poorly grounded circuit will seek a better ground path associated with adjacent circuitry if circuit paths are close enough together to permit an arc to develop. Therefore, it is extremely important that all system grounds be provided from the same ground source to minimize interaction between system grounds and reduce damaging potential differences.

6.05 Fig. 13 also illustrates that an arc path can develop between the telephone set and nearby electrical outlets or other grounded systems, resulting in damage to the set. Another vulnerable area in this arrangement is the telephone mounting cord connector, where arcing can occur from the T and R leads across to the A lead and back to the water pipe ground through the KTU and the power supply, resulting in KTU damage.

6.06 ***Protector and Power Supply Grounded to Ground Rod (Fig. 14):*** The grounding arrangement shown in Fig. 14 eliminates any possibility of arcing between the telephone line and the KTS because both the protector and the power supply are grounded to the same point. Meter M1 indicates that a peak voltage equal only to the carbon firing point exists between the telephone line and the KTS equipment. However, a large potential can exist between the KTS and the commercial power system because the latter is connected to a different ground (M2 and M3).

Other Combinations of KTS Grounds (Fig. 15 and 16)

6.07 Possible circuit arc paths can develop when more than a single type of ground is provided for the KTS. For example, Fig. 15 illustrates another grounding arrangement that exposes the KTS equipment to possible damage from line surges. The water pipe ground that is shown connected to the power supply is a better ground (lower resistance) than the ground rod; therefore, some of the surge current in the telephone line will attempt to arc across local circuitry in order to discharge energy into the better ground.

6.08 A ground rod is used to ground all system points in the installation shown in Fig. 16. This diagram illustrates how a ground, which is not the best available, can offer system protection as long as all grounds are connected to this point. Note, however, that high-voltage levels can develop between this system and the local water system (meter M1) or with respect to local building steel. Arcing could occur from some part of this installation to a nearby water pipe.

6.09 ***Commercial Power Line Surges:*** Commercial power line surges can also cause KTU, lamp, and power supply damage. Some system damage can result when these high-level transient voltages are coupled through the KTS power supply by transformer action. However, equipment damage occurs more frequently as a result of the neutral wire being connected to a different ground than the KTS. The arc paths that develop are usually between the power wiring and the telephone line or between the primary and secondary windings of the power transformer.

7. SUMMARY OF REQUIREMENTS FOR ADEQUATE KTS PROTECTION AND GROUNDING

7.01 The following procedures summarize the basic minimum requirements for achieving adequate KTS protection and grounding:

- Connect incoming telephone lines to protectors if they are exposed to damage from high-voltage transients.
- Select best available system ground for protector ground connection (use flow chart in Fig. 4).
- Connect KTS power supply circuit ground to protector ground terminal.
- Route ground wire over shortest possible path.
- Bond power service ground to KTS ground source if they are not the same.

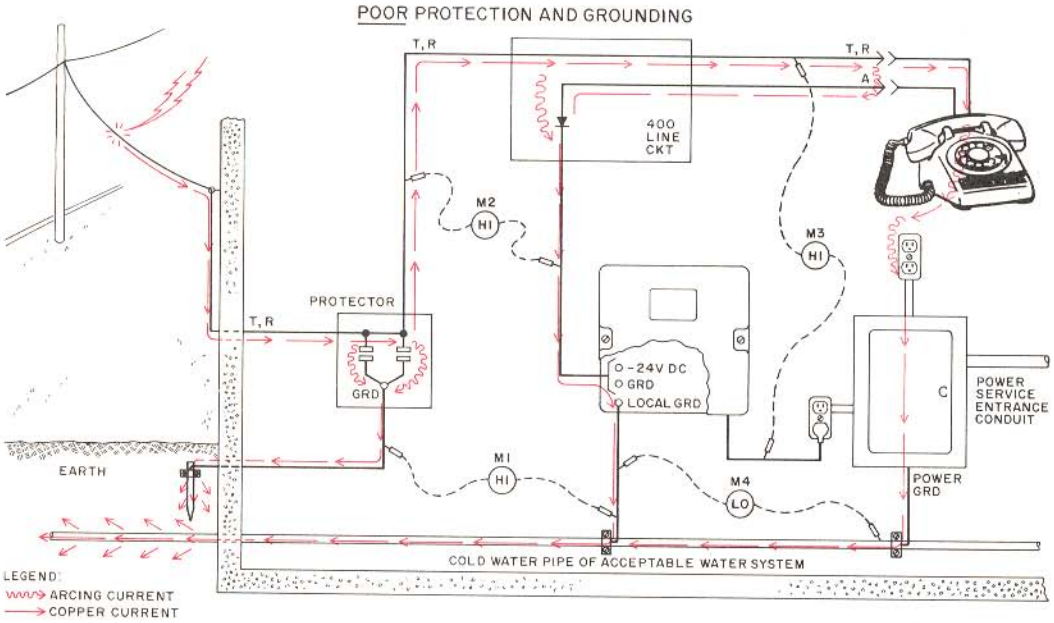

Fig. 13—Protector Ground Bonded to Ground Rod and KTS Power Supply and AC Power Grounds Bonded to Cold Water Pipe

- Be sure that KTS power supply frame ground is connected to commercial power service ground.

7.02 Certain procedures must be avoided when protecting a KTS installation:

- Do not use branch circuit conduit for ground.
- Do not use sprinkler system, gas, or hot water pipes for ground.
- Do not splice ground wire more than once.
- Do not connect power supply circuit ground and frame ground together.
- Do not cut off the ground prong on the power supply plug.

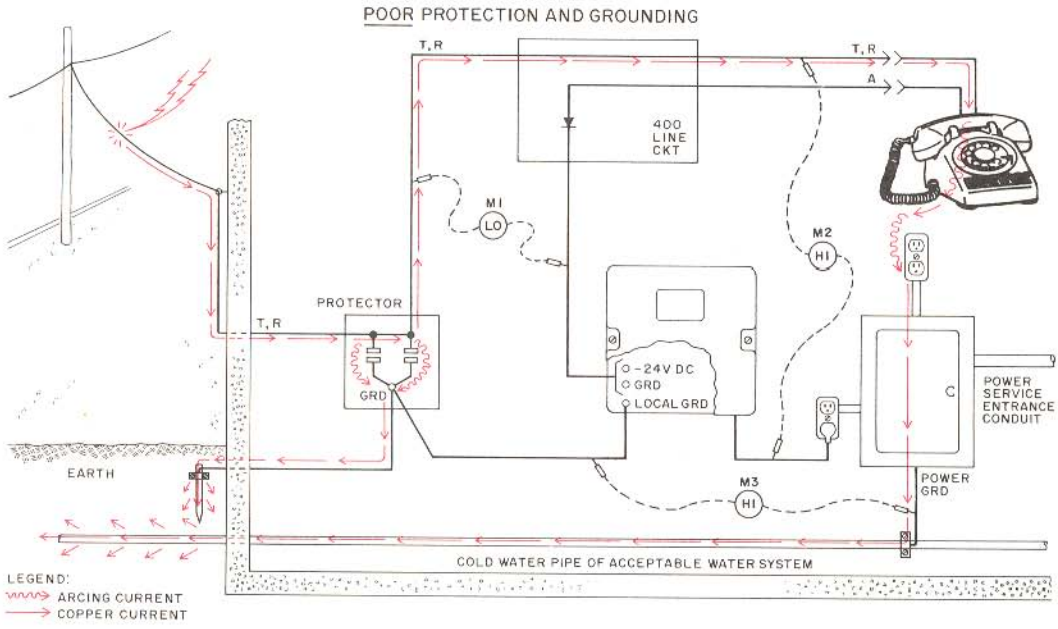

Fig. 14—Protector and KTS Power Supply Grounds Bonded to Ground Rod and AC Power Ground Bonded to Cold Water Pipe

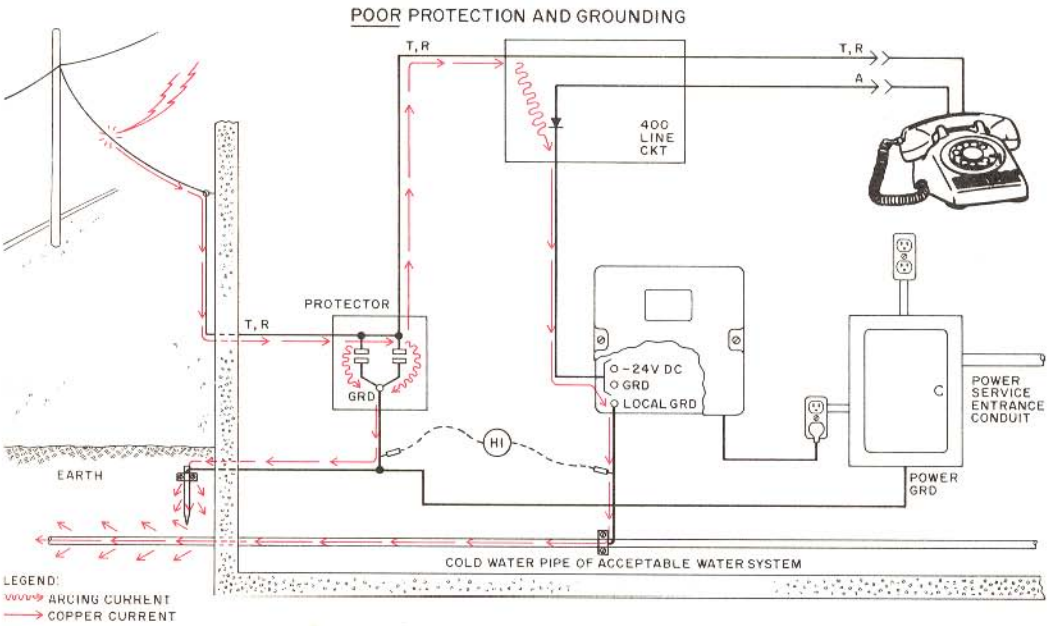

Fig. 15—Protector and AC Power Grounds Bonded to Ground Rod and KTS Power Supply Ground Bonded to Cold Water Pipe

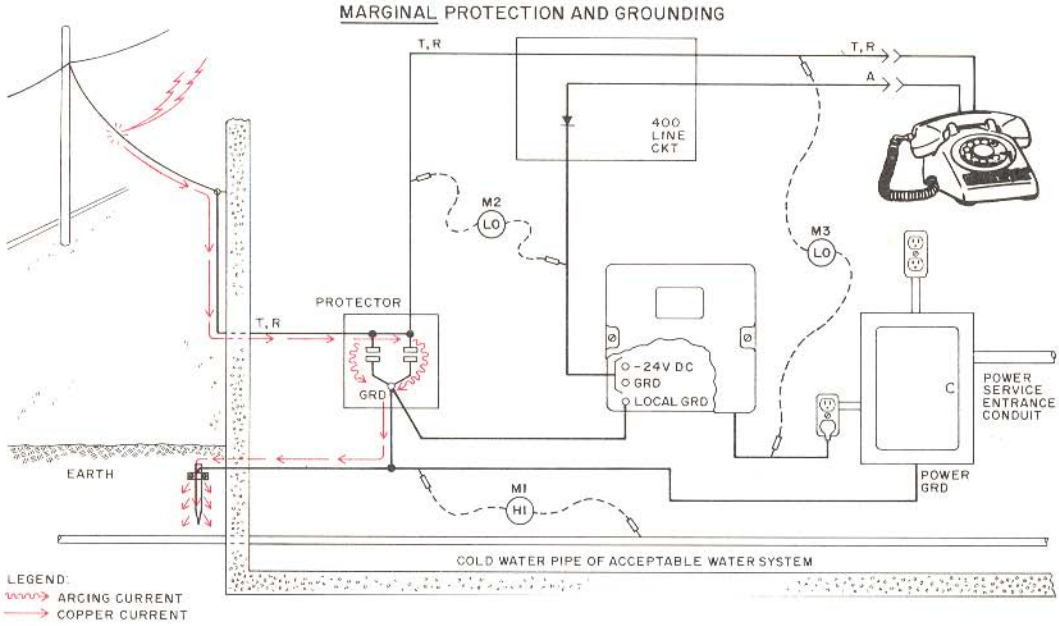

Fig. 16—All Grounds Bonded to Ground Rod

POWER UNIT SELECTION
KEY TELEPHONE SYSTEMS
AND
KEY SERVICE UNITS

1. GENERAL

1.01 This section provides the methods of selecting power units having an adequate output suitable to the type and size of a centralized key telephone system.

1.02 This section is reissued to:

- Add 20C3, 79B2, and 90B1 power units (Table C)
- Add 400G, 400H, 407C, 424B, 424C, 454A, 456B, 460B, 468A, 469A, 471B, 473A, 474A, 476A, 478B, 479B, 481A, 494A, and 498A KTUs (Table A)
- Delete Table A (Quick Selection Guide for Power Units)
- Delete Table B (Equivalent Units for 1A and 1A1 KTUs)
- Delete Table C (Equivalent Units for 1A2 KTUs)
- Revise Part 2 and delete Part 3
- Change Table F to Table A
- Change Table E to Table B
- Change Table D to Table C.

Since this reissue is a general revision, no revision arrows have been used to denote changes.

1.03 Centralized key telephone systems generally consist of mounting facilities, KTUs, power supplies, cabling, distribution terminals, adapters, fasteners, and supplemental apparatus cabinets or relay racks.

1.04 Although the output capacity of the recommended power supply may be less than that of the calculated connected load, the guide lines provided herein will ensure adequate power with very few exceptions. For those installations where all features provided would be in use at the same instant, consult your supervisor for power recommendations.

2. POWER UNITS FOR COMBINATIONS OF 1A, 1A1, 1A2, AND 6A KEY TELEPHONE SYSTEMS

2.01 A power unit for a large installation of random-mounted key telephone system equipment is selected by the following method:

(1) Determine the number and type of KTUs required.

(2) Find the current drain for each KTU from Table A (1A2 KTUs) or Table B (1A and 1A1 KTUs).

(3) Add the current drain for all KTUs used. (The total will be in milliamperes.)

(4) Convert milliamperes to amperes (1000 milliamperes equal 1 ampere).

(5) Refer to Table C to determine the type of power supply required for the installation.

Note: When choosing a power supply, consideration should be given to the lamp load. Exceeding the lamp power limitation of the power unit may result in reduced current available for other voltages.

NOTICE
Not for use or disclosure outside the
Bell System except under written agreement

TABLE A

1A2 KTU CURRENT DRAINS AT 20 VOLTS

KTU	DC DRAIN IN MA	KTU	DC DRAIN IN MA	KTU	DC DRAIN IN MA
400D	53	423A	120	456A/B	0
400G	58	424A/B/C	325	457A	600
400H	60	425B	160	460A/B	190
401A	107	426A	160	461A	122
402A	0	427B	160	467A	31
404A	0	427C	160	468A	85
407B/C	235	428A	40	469A	0
412A	54	429B	12	471B	40
413A	0	430A	44	473A	90
414A	122	440A	320	474A	7
415A	132	444A	97	476A	90
416A	141	448A	90	478B	110
417A	74	449A	90	479B	70
418A	113	451A/B	0	481A	130
419A	135	452A	93	494A	150
420A	120	453B	0	498A	105
421A	34	454A	150		
422B	155	455A	0		

TABLE B

1A AND 1A1 KTU CURRENT DRAINS AT 20 VOLTS

KTU	DC DRAIN IN MA	KTU	DC DRAIN IN MA	KTU	DC DRAIN IN MA
1A	0	26B	71	222A	1447
1C	0	29B	40	223A	720
2A	117	30A	44	224B	69
3A	21	31A	110	225A	151
5A	0	33A	200	226B	44
6B	0	34A	0	227B	88
6C	0	56A	300	228A	0
7A	49	201C	0	229B	44
10A	32	202B	44	230B	470
11A	0	202C	124.5	232B	300
12B	0	202D	124.5	232C	300
13C	112	202E	1222	234A	960
14A	0	203A	160	235B	200
15D	0	204A	300	236B	135
16A	0	205A	164	237B	81
17C	32	207C	715	238A	1170
18D	94	208A	60	239A	1287
18E	94	210A	132	240B	140
19E	188	211A	100	247B	140
20A	0	213B	68	251A	0
22-Type	0	214B	227	252A	0
23A	0	215B	157	253B	175
24A	0	216A	44	259B	0
25B	94	217B	24		

TABLE C

POWER UNITS FOR CENTRALIZED KEY TELEPHONE SYSTEMS
OUTPUT AND MOUNTING INFORMATION

UNIT	AMPERES					RING FREQ. (Hz)	MOUNTING
	20V DC TALK	20V DC SIG	MAX. TOTAL DC	10V AC LAMP	18V AC SIG		
101G J86731A, L1 (MD)	0.9	0.6	1.5	2.8	1.4	—	Wall
101G J86731A, L2 (MD)	0.9	0.6	1.5	2.8	1.4	20	Wall, Floor
101G J86731A, L4 (MD)	0.9	0.6	1.5	2.8	1.4	20	Wall, Floor
101G J86731A, L5	—	—	—	—	—	20	Wall
101G J86731A, L6 (MD)	0.9	0.6	1.5	2.8	1.4	—	Wall
101G J86731A (Modified with J86248, L3)	0.6	1.5	1.5	1.4	1.4	20	Wall, Floor
101G J86731B-2, L1 (MD)	—	—	—	17	—	—	Wall
101G J86731C-2, L1	—	—	—	—	—	20	Rack, Cabinet
101G J86731C-2, L2	—	—	—	—	—	20	Wall
101G J86731D-3, L1	0.9	0.6	1.5	2.8	1.4	—	Rack, Cabinet
101J J86471B, L1 (MD)	4.0	4.0	4.0	5.0	1.6	—	Wall or Rack
19A-2	0.6	1.9	1.9	5.5	—	—	Rack
19B-2	0.6	1.5	1.5	4.5	1.4	—	Wall
19C-2	0.6	1.5	1.5	4.5	1.4	—	Rack
19C-3*	0.6	1.9	1.9	5.5	—	—	Cabinet
20A-2	0.6	1.5	1.5	4.5	1.4	30	Wall
20B-2	0.6	1.5	1.5	4.5	1.4	30	Wall
20C-2	0.6	1.5	1.5	4.5	1.4	30	Rack
20C-3	0.6	1.9	1.9	4.5	1.4	30	Rack
29B-1‡	1.0	4.0	4.0	12.0	1.6	—	Wall
29C-1	1.0	4.0	4.0	12.0	1.6	—	Rack
30B-1	1.0	4.0	4.0	12.0	1.6	30	Wall
30C-1	1.0	4.0	4.0	12.0	1.6	30	Rack
34B-1	—	—	—	25†	—	—	Wall
34C-1	—	—	—	25†	—	—	Rack
67B-1§	—	—	—	12	—	—	Wall
67C-1§	—	—	—	12	—	—	Rack
79B-2	0.6	1.9	1.9	4.5	—	30	Wall
90B-1	1.0	4.0	4.0	12.0	—	30	Wall

* 19C-3 is a 19A-2 assembled in a P-15G705 cabinet.
† 35 amperes if load is intermittent, ie, approximately 5% of any 6-hour period.
‡ Kit of parts D-180277 converts 29B1 to 30B1.
§ The 67B-1 and 67C-1 also provide 10V AC at 0.3 amperes for interrupter motor power.

KEY TELEPHONE SYSTEMS
RESERVE POWER
47C POWER UNIT

1. GENERAL

1.01 The 47C power unit (Fig. 1) provides emergency power to maintain talk and signal voltages, lamp voltages, and ringing voltage in key telephone systems during commercial power failures.

1.02 This issue of the section is based on the following drawings:

CD-81964-01, Issue 2A

SD-81964-01, Issue 5A

If this section is to be used with equipment or apparatus reflecting later issues of the drawings, reference should be made to the CD and SD to determine the extent of the changes and the manner in which the section may be affected.

1.03 The power supply will provide from 4 to 8 hours of reserve power for up to 13 1A2 line circuits or equivalent 1A, 1A1, and 1A2 power loads. The exact reserve time is dependent on line usage and lamp multipling for each installation.

2. IDENTIFICATION

2.01 The 47C power unit provides emergency power from a KS-20390, List 1 nickel cadmium battery which is automatically activated during commercial power failures and disconnected when commercial power has been restored. The power unit is normally in a standby state with the battery on trickle charge. The power unit also provides mounting space for an optional 116A frequency generator capable of operating up to six high impedance ringers.

2.02 The 47C power unit interconnects between the standard ac power unit and the key telephone equipment it serves. It provides the following outputs:

- −24V dc for signaling (B Bat.)
- −24V dc for talking (A Bat.)
- −10V dc for lamps

When a ringing supply is required for emergency service, the optional 116A frequency generator is mounted in the power unit to provide 25 Hz ringing voltage.

2.03 The power unit is approximately 10-1/2 inches wide by 6-7/8 inches high (including mounting bracket) by 7-3/16 inches deep. It is designed to be rack mounted using frame mounting bars. It can also be mounted in the 502, 513, or 515 key service units in the regular power supply location when an external power supply is provided.

2.04 The front panel (Fig. 2) of the power unit, mounting the input and output screw terminals and fuses, is removable.

2.05 The power unit consists of three main parts:

- Control circuit (GL-1 circuit pack)
- Battery (KS-20390, L1)
- Optional ringing generator (116A frequency generator).

2.06 ***Control Circuit (GL-1 Circuit Pack):*** A plug-in type circuit pack used to:

- Automatically connect emergency ac and dc supply to key telephone equipment when commercial power fails, and to disconnect the emergency power supply when commercial power is restored.
- Disconnect discharged battery from key equipment to protect both battery and key equipment from damage.

Caution: Do not attempt to adjust potentiometer R6.

© American Telephone and Telegraph Company, 1972
Printed in U.S.A.

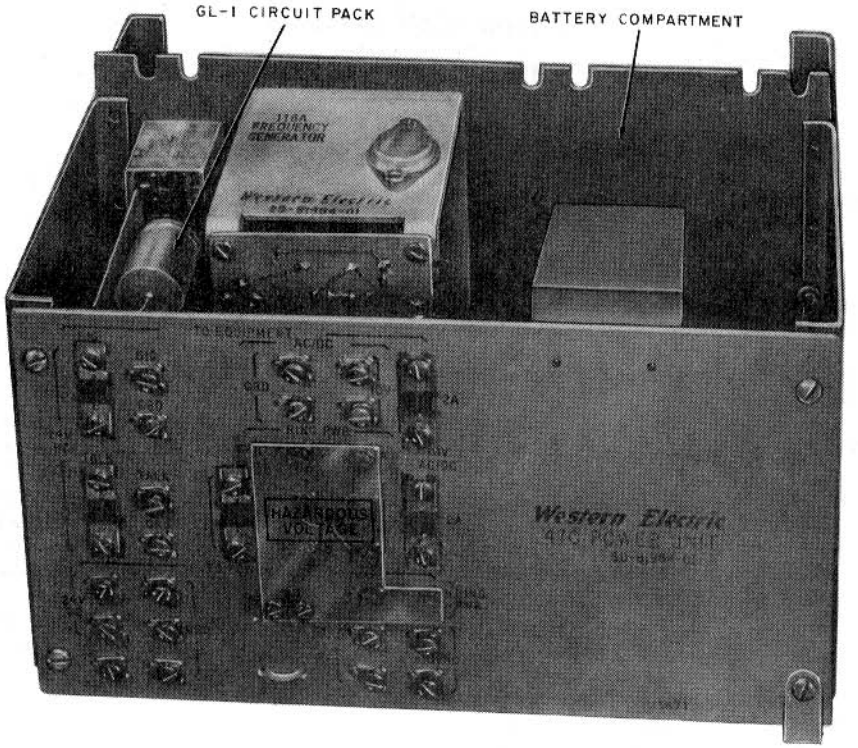

Fig. 1—47C Power Unit

- Connect the battery for trickle charge (from the normal use power unit) when the unit is on standby.

Note: The batteries will normally be fully recharged in approximately 24 hours.

2.07 ***Battery (KS-20390, List 1):*** Consists of a 24-volt (dc reserve) and a 10-volt dc (lamp reserve) battery in a single case. The battery is mounted in the battery compartment and connected to the power unit with a connector ended cable (Fig. 2). The battery will provide approximately three years of service at ambient temperatures ranging from 32° to 140°F. A label is provided on the battery for recording the installation date.

2.08 ***Ringing Generator (116A Frequency Generator):*** Furnished on an optional basis since a local ringing supply is required only with common audible ringing to standard ringers. The frequency generator has the capability to operate six high impedance ringers simultaneously.

ORDERING GUIDE

- Unit, Power, 47C
- Battery, KS-20390, L1
- Interrupter, KS-19384 or KS-19385 (See 3.02)

Replaceable Component

- Assembly, Pack, Circuit, GL-1

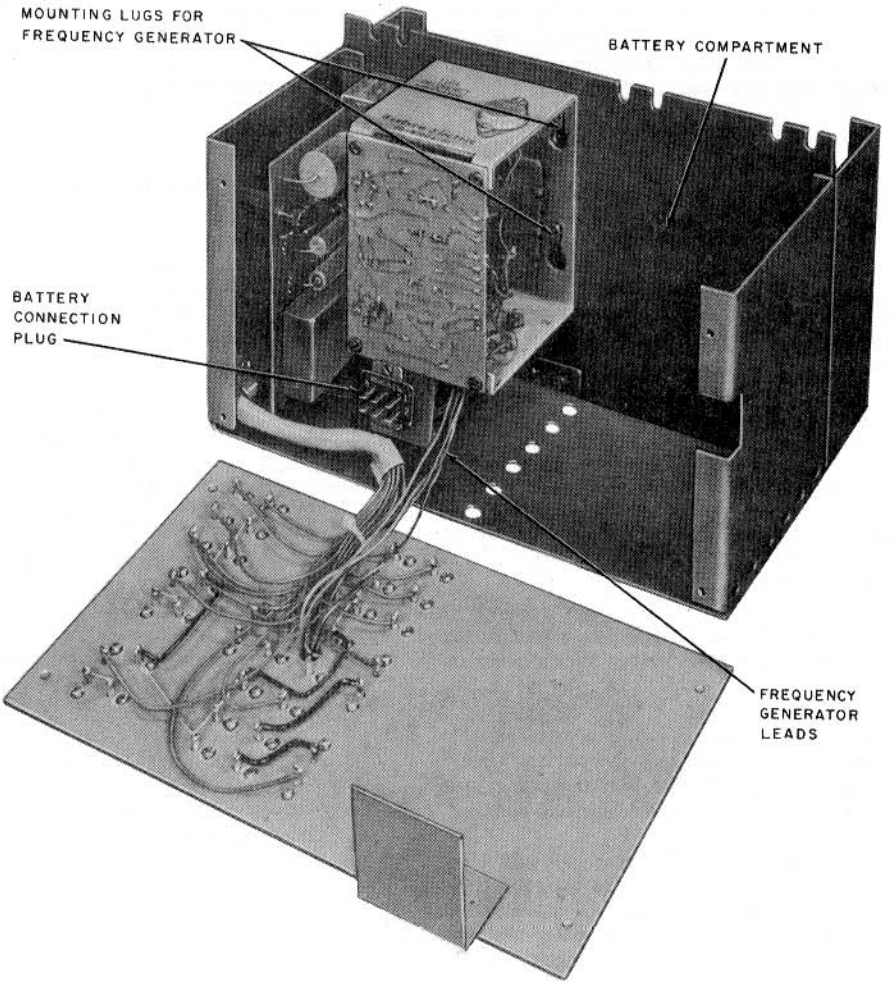

Fig. 2—47C Power Unit (Front Cover Removed)

Optional Components

- Buzzer, KS-8109, L2 (See 3.01)
- Generator, Frequency, 116A.

3. INSTALLATION

Planning

3.01 KS-8109, L2 buzzers (24V dc) may be used for common audible signaling. This would

eliminate the need for the 116A frequency generator. ***However, in view of the buzzers high current drain, their use should be considered only where the number of buzzers is small and ringing is a small portion of overall calling.***

3.02 The interrupter normally used in key telephone system installations operates on 10V ac. ***It is necessary to replace the ac interrupter with a 24V dc interrupter (KS-19384 or KS-19385).***

3.03 The KS-20390, L1 battery is shipped in a discharged stage. ***It must be charged for 16 hours to attain a fully charged state before being placed in service.*** To charge battery, proceed as follows:

(1) Remove front cover from 47C power unit (Fig. 2).

(2) Place battery in power unit battery compartment and connect battery connector to mating battery connection plug.

(3) Replace front cover.

(4) Connect a 19- or 20-type power unit to the power unit as shown in Fig. 3 for a minimum of 16 hours.

Note: Since reserve power is not available until battery is charged, the battery should be charged at the installation work center prior to installation at the customer's premises.

3.04 The output of a 47C power unit and 116A frequency generator are not designed to be paralleled. In large key telephone installations it will be necessary to dedicate the power unit and frequency generator to specific equipment.

Installing



Refer to Section 167-400-200 for general requirements necessary for the proper installation of the power unit.

3.05 For ease of installation, the battery and optional frequency generator should be installed in the power unit before it is mounted.

3.06 To install battery and frequency generator, proceed as follows:

(1) Remove front cover from power unit (Fig. 2).

(2) Record installation date on label provided on battery.

Note: Installation date must be recorded so follow-up replacement can be made. The battery should be changed after three years service.

(3) Place ***fully charged*** battery (see 3.03) in battery compartment and connect battery connector to mating battery connection plug.

(4) Slide frequency generator (if used) in place on mounting lugs.

(5) Insert frequency generator leads through hole in front panel.

(6) Replace front cover on power unit

(7) Connect frequency generator leads to terminals (Fig. 3) on front panel as follows:

TERM	LEAD
1	Red
2	Red-White
3	Blue
4	Blue-White

3.07 Mount the power unit at the desired location. Mounting hardware must be furnished locally.

3.08 Ensure that power unit is properly fused. See Table A and Fig. 1 for fusing.

TABLE A

24V DC SIGNAL	2-ampere, No. 24C fuse
24V DC TALK	2-ampere, No. 24C fuse
10V AC LAMP	2-ampere, No. 24C fuse
10V AC LAMP	2-ampere, No. 24C fuse
FREQ GEN	3/4-ampere, No. 24D fuse

3.09 In the associated key telephone equipment, replace the 10-volt ac interrupter with a 24-volt dc KS-19384 or KS-19385 interrupter.

4. CONNECTIONS

4.01 Connect power unit as shown in Fig. 3.

4.02 After connecting the power unit, it should be operated in the system for a minimum of 10 minutes on commercial ac power before it is tested.

4.03 Check the installation by removing the ac power to the KTS power supply. Make a test call to a station in the KTS. The KTS should operate in a normal manner on receiving the call. If it does not, the battery is defective, or not charged, or the power unit is defective. Use a KS-14510 volt-ohm-milliammeter or equivalent to check the battery as follows:

MEASURE BETWEEN	READINGS
SIG (−) and GRD (+)	> 20.0 Volts
10V and GRD (+)	> 9.0 Volts

If either of the preceding readings is not obtained, the battery should be recharged and if defective replaced.

5. MAINTENANCE

5.01 Keep the 47-type power unit clean and free of all foreign matter to ensure proper operation of the unit.

5.02 Periodicaly check the operation of the power unit in accordance with 4.03.

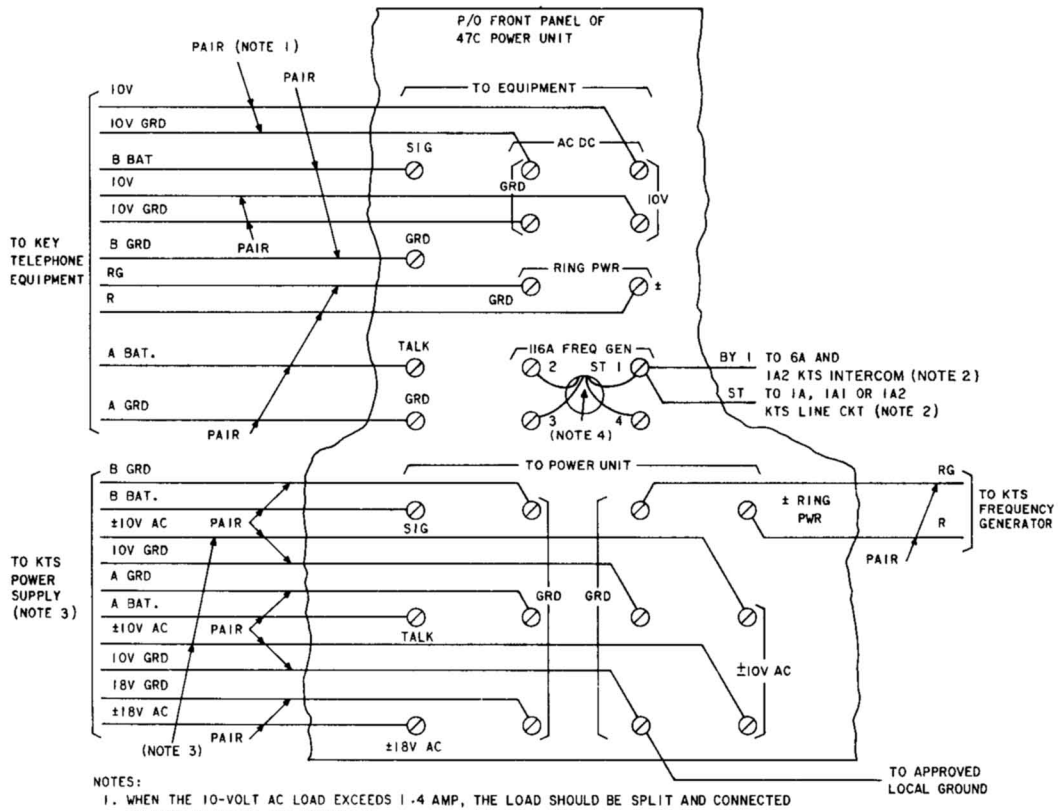

NOTES:

1. WHEN THE 10-VOLT AC LOAD EXCEEDS 1.4 AMP, THE LOAD SHOULD BE SPLIT AND CONNECTED TO BOTH PAIRS OF 10V TERMINALS.
2. THE ST TERMINAL SHOULD BE CONNECTED TO THE BY1 LEAD OF THE 6A AND 1A2 KEY TELEPHONE SYSTEMS, AND THE ST LEAD OF EITHER 1A, 1A1, OR 1A2 KEY TELEPHONE SYSTEM LINE CIRCUIT.
3. AN ADDITIONAL 2-AMPERE FUSE SHOULD BE PLACED IN PARALLEL WITH THE EXISTING 2-AMPERE SIGNAL FUSE IN THE KTS POWER SUPPLY. THESE FUSES SHOULD BE ARRANGED SO THE INSULATED SIDES FACE EACH OTHER.
4. LEADS FROM INTERNAL 116A FREQUENCY GENERATOR.

Fig. 3—Connections for 47C Power Unit

COMMON AUDIBLE SIGNALING
KEY TELEPHONE SYSTEMS

1. GENERAL

1.01 This section provides a general description of common audible signaling arrangements, especially those using diode matrix or signal control relays. It also describes the need and use of the 141A protector and 840A diode assembly.

1.02 This section is reissued to provide information about the 840A diode assembly and to add a note limiting the use of the 141A protector.

1.03 Common audible signaling provides for:

- Signaling one station from more than one CO, Centrex, PBX, or intercom line
- Signaling more than one station from one CO, Centrex, PBX, or intercom line
- Signaling combinations of the previous arrangements (with these combinations, a diode matrix or signal control relay is required).

1.04 Common audible signaling arrangements, which utilize a local frequency generator (110 volts, 30 Hz) for operating ringers, can be subjected to voltage spikes of sufficient amplitude to damage key telephone units (KTUs) and/or blow fuses. Depending on the phase of the current through the ringer when the current is interrupted, voltage spikes of either polarity can appear on the RC lead.

1.05 To protect against these ringer transients, a 141A protector is connected between the B1 and R1 terminals in the station cable to each ringer.

Note: ◆The 141A protector is not required if a 400G or 400H KTU is used in the line circuit.◆

2. COMMON AUDIBLE SIGNALING CIRCUITS-OPERATION

2.01 A simplified schematic of one audible signal operated from two lines is shown in Fig. 1. A call on line 1 operates relay R in line circuit 1 causing contact R to make. The ac signal is applied through diode CR1. Diode CR1 allows the positive components of the ac signal to operate the common audible signal. Diode CR2 isolates line circuit 2 from this signal. A call on line 2 will result in relay R in line circuit 2 operating and applying the ac signal via CR2.

2.02 If the station audible signal (Fig. 1) will be rung only from lines 1 and 2, and if these lines will not ring any other station, the diodes and diode matrix are not required.

2.03 ***Common Ringing Lead:*** A simplified schematic of one line operating two-station audible signals is shown in Fig. 2. A call on line 1 operates relay R, causing contact R to make. The ac signal is applied through diodes CR1 and CR2. The positive components of the ac signal operates both station audible signals.

2.04 If no other line will ring station A or B (Fig. 2), the diodes and matrix are not required. Ringers in the stations can be rung directly from tip and ring of the line.

2.05 A simplified schematic of a two line, three-station common audible signaling arrangement is shown in Fig. 3. A call on line 1 results in a signal at stations A and B, but not C since diode CR3 blocks the path. A call on line 2 results in a signal at stations B and C, but not A due to diode CR2. Station B is common to lines 1 and 2. Stations A and B are common to line 1. Stations B and C are common to line 2.

NOTICE
Not for use or disclosure outside the
Bell System except under written agreement

3. COMMON AUDIBLE SIGNALING APPLICATIONS

3.01 An example of a diode matrix installation is shown in Fig. 4. To the left is a schematic representation of the 1A1 matrix block at the right. Diodes (446 type or equivalent) are connected so their arrows point towards the station audible signals, permitting five signaling leads to control six audible signals. The block could also be wired to permit six signaling leads to control five audible signals by connecting the signaling leads at the left side (A-F) and the audible signals at the top (1-5). For this configuration all diodes must be connected so their arrows point toward the audible signals.



All line circuits connected to a diode matrix must be supplied from the same ringing supply and interrupter contact.

3.02 A strap is used to connect a signaling lead to an audible signal if neither is common to any other signaling lead or audible signal. An example of this is the strap between signaling lead 5(CA) and audible signal F (Fig. 4).

3.03 Diode control limits the type of audible signal to either all ringers or all ac buzzers (do not mix). ***To avoid diode failure, never use dc buzzers.*** When ringers are used, the ringing capacitor of each station should be disconnected and bypassed and the red ringer lead should be connected to the diode matrix.



A positive component results after an ac signal has passed through a diode in the direction of the "arrow." This positive component cannot pass through a diode against the arrow. On this principle a diode matrix separates audible signals and signaling leads. ALL DIODES AND RINGERS (IF USED) MUST BE POLARIZED IN THE SAME DIRECTION.

3.04 The matrix in Fig. 4 is arranged so that:

CALL ON LINE	STATION(S) SIGNALED
1*	B
2	A, B, and C
3	A, C, and D
4	A, C, and E
5*	F

* Signaling leads 1 and 5, corresponding to lines 1 and 5, are not common signaling leads since they each control only one audible signal.

3.05 For a detailed description of the 1A1 matrix blocks, see Section 461-620-100.

3.06 Section 518-215-403 provides functional schematics of the 402A and 404A (diode matrix) KTUs.

3.07 Common audible signaling can also be accomplished with the use of signal control relays in place of a diode matrix. The same principles apply. Instead of diodes, relay contacts connect the ringing leads to the proper ringers. Section 518-310-401 provides various connections using the 227B KTU as a common audible signaling control.

3.08 ▶To provide common audible signaling on large key systems, a matrix arrangement can be provided by using 66B- or 66M-type connecting blocks and 840A diodes. The 840A diode is an assembly consisting of a 533F diode connected to two spring contacts encapsulated in a clear plastic housing. The 840A diode is inserted on adjacent terminals of the 66-type connecting blocks.◀

3.09 ▶A typical common audible signaling arrangement using a 66B-type connecting block, and 840A diode for signaling one common audible signal from three CO/PBX lines, is shown in Fig. 6. Refer to Fig. 7 for the polarity designation of the 840A diode.◀

4. 141A PROTECTOR

4.01 The 141A protector (Fig. 5) consists of a 68,000 ohm, 1/2-watt resistor in a blue molded assembly. The dimensions of the protector are 6/10-inch by 1/2-inch by 3/10-inch, and it is designed to be installed on 66-type connecting blocks having quick-connect terminals.

4.02 The 141A protector is inserted between the B1 and R1 terminals in the station cut-down field (Blue Field) without affecting the cut-down multiple. See Fig. 1, 2, and 3.

4.03 For new key telephone system (KTS) installations, every station served by a local frequency generator should be protected by 141A protectors. At existing installations, protectors should be installed for each station (served by a local frequency generator) during routine servicing of the installation.

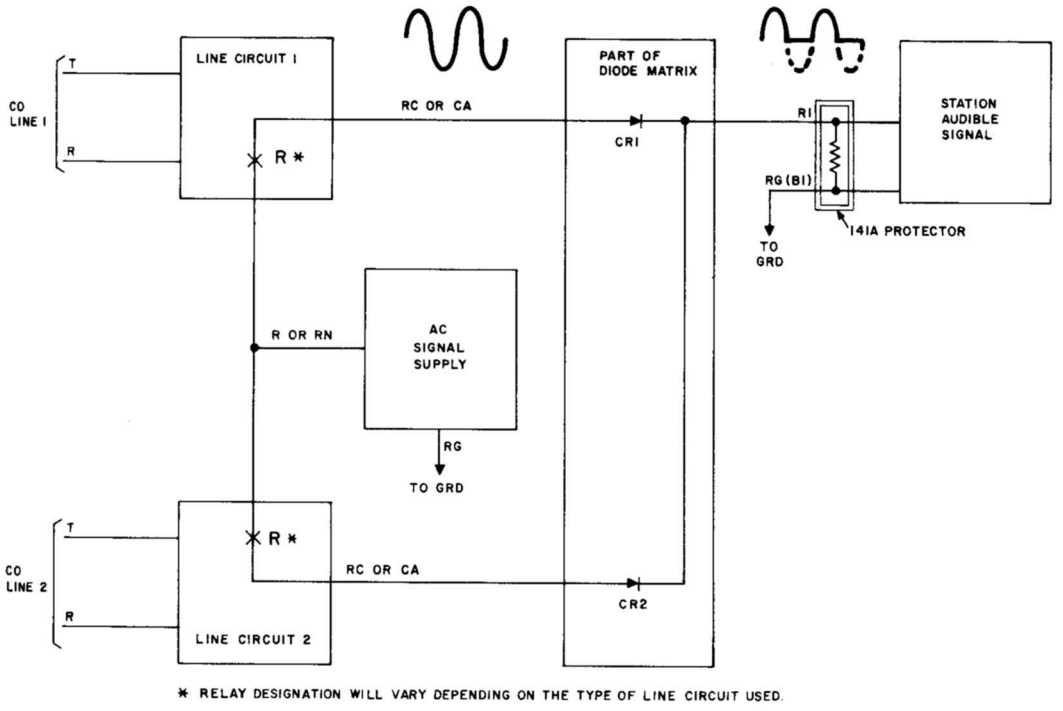

Fig. 1—Simplified Schematic of Two Lines and One Audible Signal

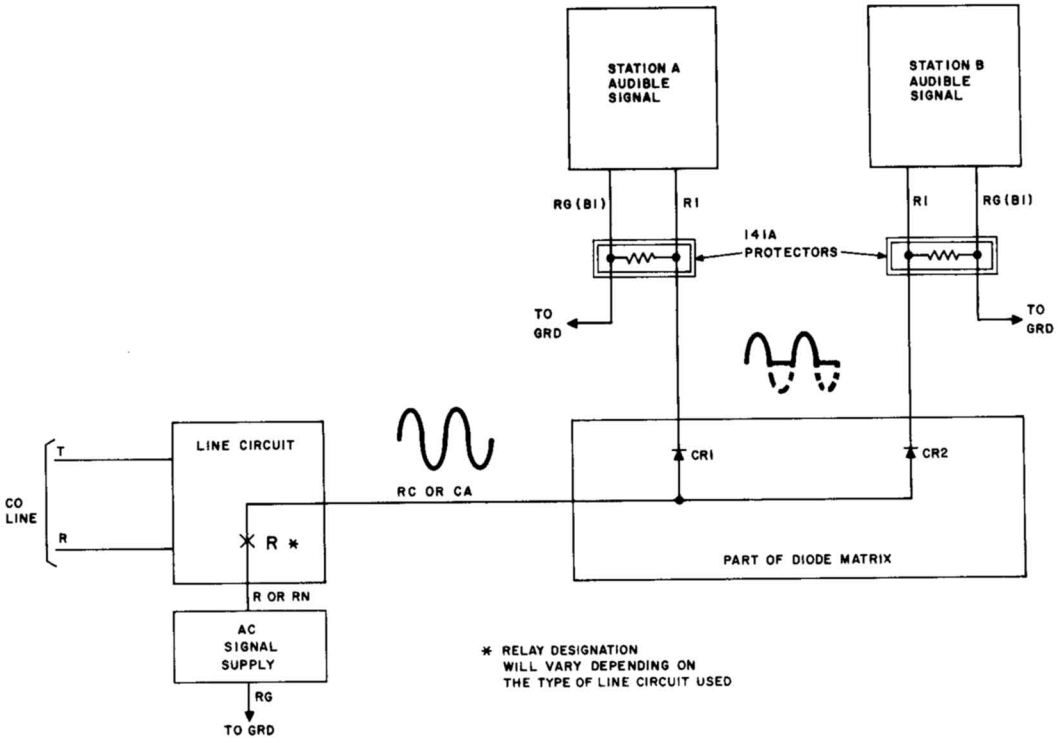

Fig. 2—Simplified Schematic of One Line and Two Audible Signals

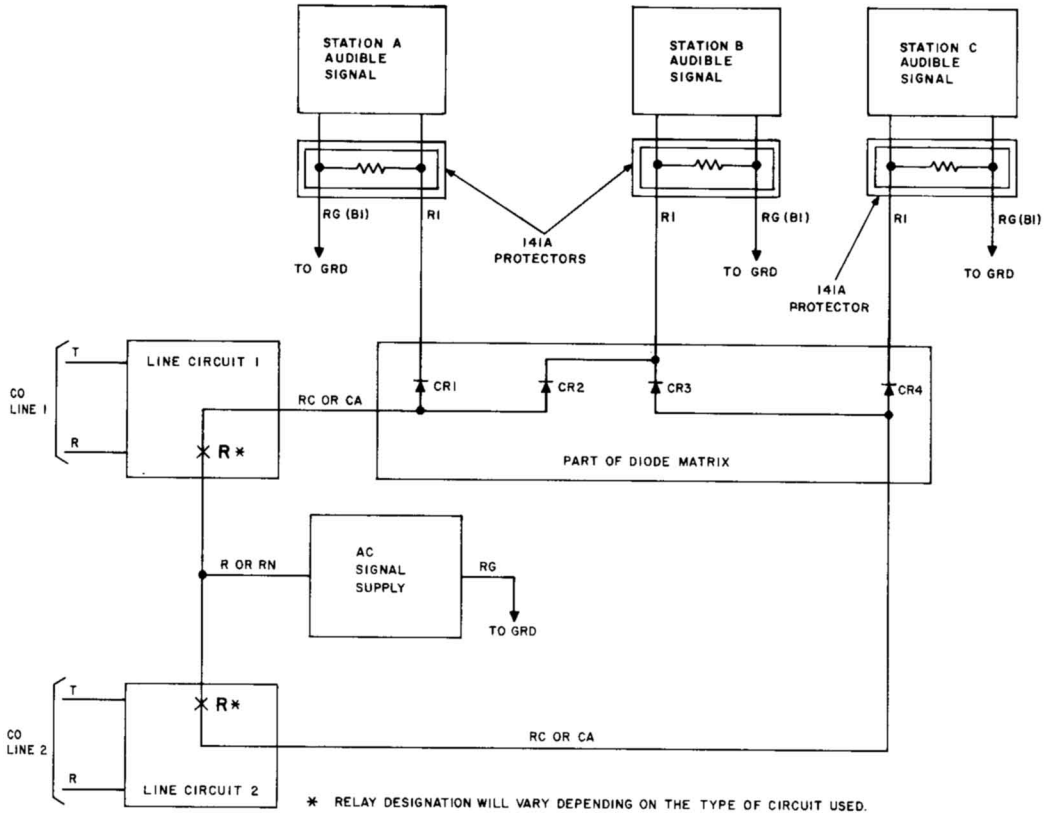

Fig. 3—Simplified Schematic of Two Lines and Three Audible Signals

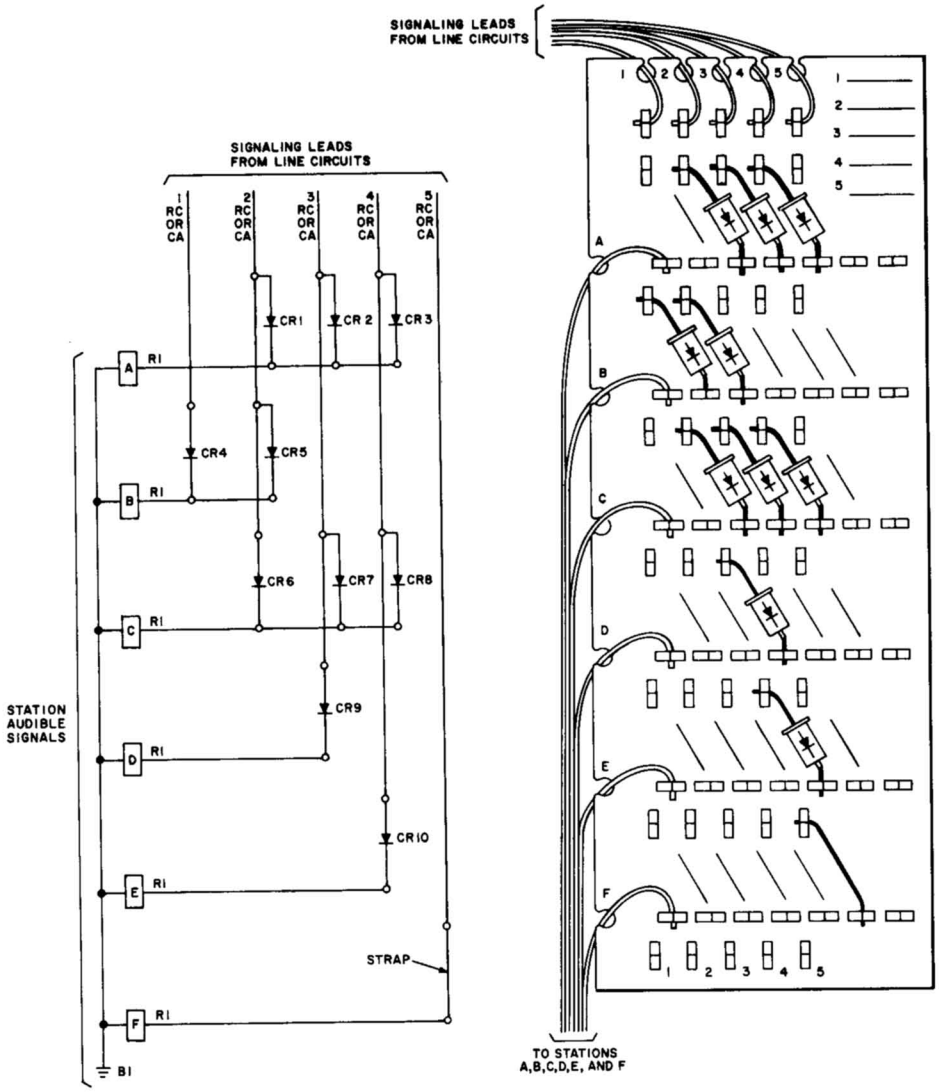

Fig. 4—1A1 Matrix Block Application

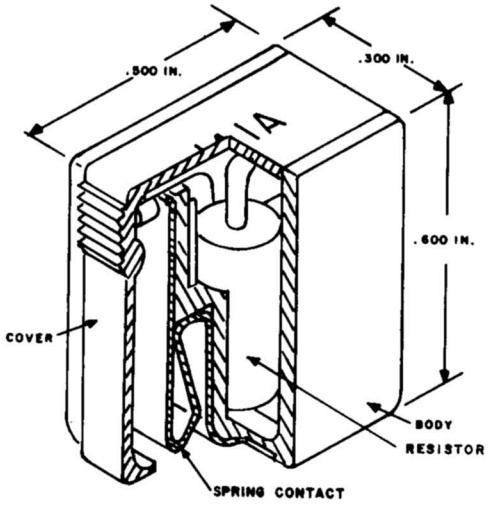

Fig. 5—141A Protector

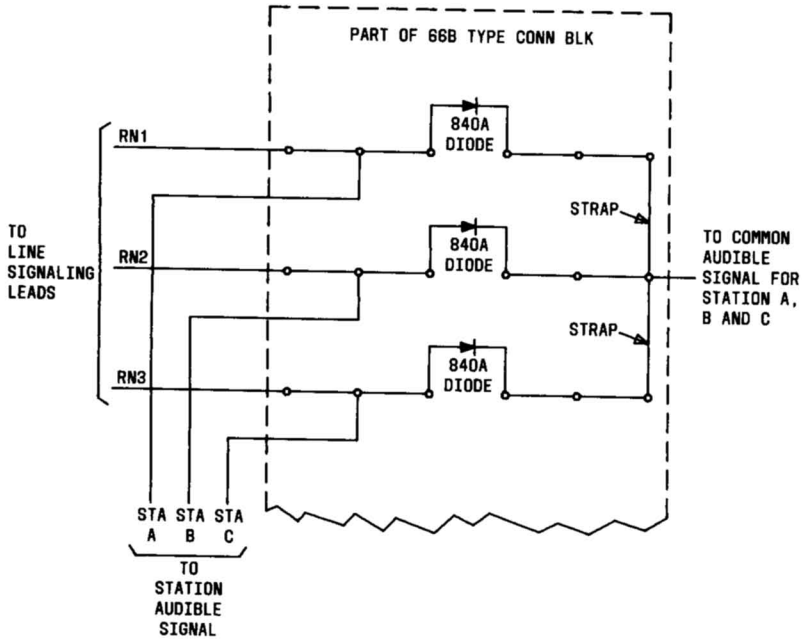

Fig. 6—Typical Common Audible Signaling Arrangement on 66-Type Connecting Block With 840A Diode

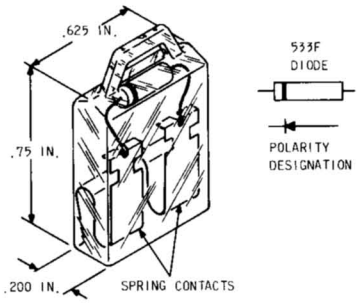

Fig. 7—840A Diode

VOICE STATION SIGNALING
ON MANUAL INTERCOMS
IDENTIFICATION, INSTALLATION, AND MAINTENANCE

1. GENERAL

1.01 This section covers voice signaling on manual intercom circuits using a 107B SPOKESMAN® loudspeaker set, a 6-, 10-, or 20-button telephone set, and CALL DIRECTOR® telephone sets.

1.02 This section is reissued to:

- Add information on the use of 10- and 20-button telephone sets and CALL DIRECTOR telephone sets
- Add information on the use of a called loudspeaker station without an associated telephone set
- Revise Fig. 1
- Add new Fig. 2
- Add new Fig. 3
- Revise Tables A and B
- Revise connection and operation information
- Include loudspeaker housing as a replaceable component
- Include 24-volt key system battery as power source for loudspeaker.

Since this reissue is a general revision, arrows ordinarily used to indicate changes have been omitted.

2. IDENTIFICATION

2.01 ***Purpose***—To provide voice signaling on manual intercoms.

2.02 ***Application***—For use with all telephone sets shown in Table A.

2.03 ***Ordering Guide***

- Set, Loudspeaker, 107B-*

(a) ***Replaceable Components:***

- Cord, Mounting, D6AF-87 (available in 7-, 14-, or 25-foot lengths; specify length desired)
- Housing (see Table B).

(b) ***Associated Apparatus (order separately if required):***

- Bracket, 77A
- Transformer, 2012B
- Key, 551A
- Buzzer, KS-20419L1
- Clamp, 2A
- Connecting Block, 66E8-25
- Adapter, 149B.

3. INSTALLATION

A. Planning

3.01 An external 18- to 24-volt ac or dc power source is required. This power may be provided by:

- A 2012B transformer

*Refer to Table B for color selection.

NOTICE
Not for use or disclosure outside the
Bell System except under written agreement

- The 18-volt ac terminals of available power plant
- A 24-volt key system battery
- For temporary power supply, a 22.5- to 30-volt battery.

3.02 When a 2012B transformer is used for power, the customer must provide a separately fused ac receptacle ***not*** under control of a switch.

3.03 The maximum length of IW cable used between the power supply and loudspeaker should not exceed 200 feet.

3.04 The maximum length of IW cable used between the loudspeaker and the associated telephone set should not exceed 100 feet.

B. Installing

3.05 When a spare button on telephone set is used to operate voice signaling on manual intercoms, the button must be converted from locking to nonlocking by removing the locking pin. For the method of removing the locking pin, refer to the section listed in Table A for the telephone set being used.

3.06 When an external 551A key is used to operate voice signaling on manual intercom, mount key on 77A bracket.

3.07 ***The 6-Button Telephone Sets***—Bring the loudspeaker mounting cord directly into the telephone set and insulate and store R and G leads. The power supply may be brought into the telephone set over spare cord conductors and connected to the loudspeaker set cord using spare terminals as shown in Table A and Fig. 1.

3.08 ***The 10- and 20-Button Telephone Sets***—These sets do not have suitable spare leads or terminals for voice-signaling connections and require the use of a 66E8-25 connecting block at the called station for access to the required leads (Fig. 2).

> ***Note:*** The 149B adapter can be used instead of the 66E8-25 in some applications; it does not provide access to all leads passing through it.

One of the line buttons of the calling station may be used for initiating the voice-signaling function as shown in Fig. 2. Power connections to the loudspeaker at the called station are via terminals on the 66-type block.

3.09 ***Call Director Telephone Sets***—Screw terminals are not available in CALL DIRECTOR telephone sets; therefore, a 66E8-25 connecting block should be used at the called station for access to the required leads (Fig. 2).

3.10 ***Standalone Arrangement***—The called station can consist of a loudspeaker alone without any associated telephone set. A generalized example of this arrangement is provided in Fig. 3.

4. CONNECTIONS

4.01 An example of connections for voice signaling with manual intercom using typical 6-button telephone sets is shown in Fig. 1. Connections for typical 20-button sets using a 66-block at the called station are shown in Fig. 2. While there may be many ways to set up an arrangement for voice signaling with manual intercom, the following requirements must always be met:

- A manual intercom path consisting of a T, R pair must exist between the calling and called station
- The input of the loudspeaker at the called station must be bridged across the intercom T, R pair
- The power and ground, which turn on the loudspeaker for voice signaling, must be under the control of a button at the calling station.

A. 6-Button Telephone Sets (Fig. 1)

4.02 Connect loudspeaker set mounting cord to telephone set at called station as follows:

- Connect (W) lead to tip of manual intercom line.
- Connect (BL) lead to ring of manual intercom line.
- Connect (Y) lead to BZ1 lead of telephone set using spare terminal as shown in Table

A. If BZ1 is not available, use spare conductor in telephone set mounting cord.

- Connect (BK) lead to SG terminal of telephone set.

4.03 At calling station connect external 551A key or converted telephone set button—for 551A key, use spare conductors in telephone set mounting cord; for converted telephone set button, use appropriate cord conductors. See section pertaining to telephone set being used for conductor colors.

Note: Connections for a buzzer circuit in addition to intercom signaling are shown in Fig. 1. If buzzer is not required, these connections can be omitted.

B. 10-, 20-Button, and CALL DIRECTOR Telephone Sets (Fig. 2)

4.04 At the called station, connect the cable for the key telephone system (KTS) equipment into the plug of the 66E8-25 block installed near the telephone. Connect the telephone mounting cord to the receptacle of the 66-type block.

4.05 Connect the loudspeaker mounting cord to the 66E8-25 block as follows:

- Connect the (W) lead to the tip of the manual intercom line
- Connect the (BL) lead to the ring of the manual intercom line
- Connect the (Y) lead to the terminal of the 66-type block where 24-volt battery will be available
- Connect the (BK) lead to the terminal of the 66-type block where ground will be available.

4.06 At the calling telephone set, modify the button selected for voice-signaling control so that it provides a path for battery to the distant loudspeaker. At the corresponding button on the called station, disconnect the lamp so that it does not light when the loudspeaker is turned on.

4.07 Connect B ground through the connector cable to the terminal on the 66-type block where the loudspeaker ground lead is connected.

4.08 ***Standalone Arrangement***—Use inside wire to apply manual intercom tip and ring and battery and ground to the loudspeaker set.

5. OPERATION

5.01 The telephone set used to operate the voice signaling on manual intercom is used in the normal manner. The handset must be off-hook and the manual intercom line button depressed.

5.02 Before using the voice-signaling arrangement, turn the ON/OFF switch of the 107B loudspeaker clockwise. This closes the power input path to the loudspeaker, allowing the operator of the calling telephone to control the on/off status of the loudspeaker with the voice-signaling button.

5.03 Use the voice-signaling feature as follows:

(1) At calling station, lift receiver off-hook, depress manual intercom line button

(2) Depress voice-signaling button on operating telephone set and hold depressed during voice signaling



The possibility of acoustic feedback (singing) exists whenever the called party receiver is off-hook on the intercom line and the calling party has the voice-signal key depressed. To avoid this problem, place the loudspeaker and telephone set as far apart as possible and set volume control of loudspeaker as low as possible.

(3) At called station, adjust volume control of 107B loudspeaker to a satisfactory level.

5.04 Do not turn loudspeaker ON/OFF switch to the OFF position. This will disable the voice signaling.

6. MAINTENANCE

6.01 For maintenance of the associated telephone sets, refer to the section covering the type of set involved.

6.02 Maintenance of the 107B loudspeaker is limited to replacing the mounting cord and the housing.

6.03 When it is reported that voice signaling does not operate, check the following:

- Volume control on 107B loudspeaker turned too low
- ON/OFF switch on 107B loudspeaker turned to OFF position
- Power source disconnected
- Wiring of loudspeaker and nonlocking key.

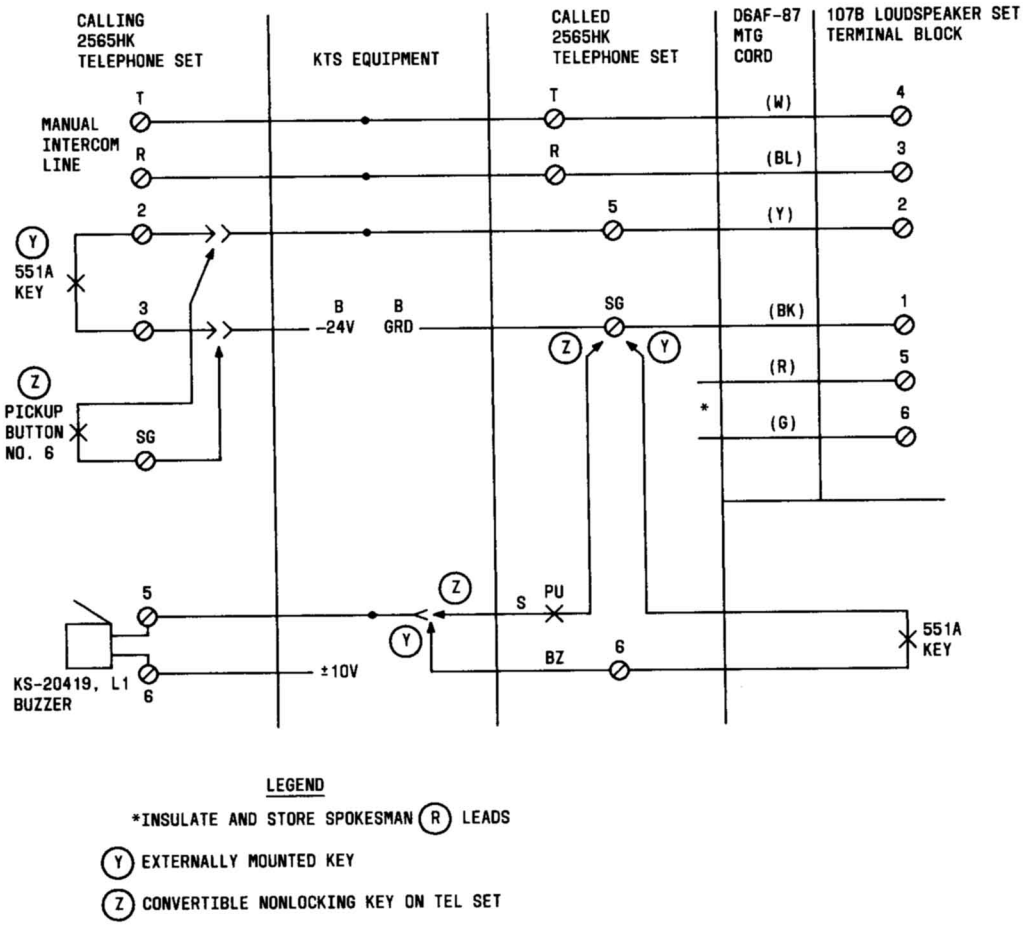

Fig. 1—Example of Connections for Voice- and Conventional-Signaling Arrangements With Manual Intercom Using 2565HK Telephone Sets

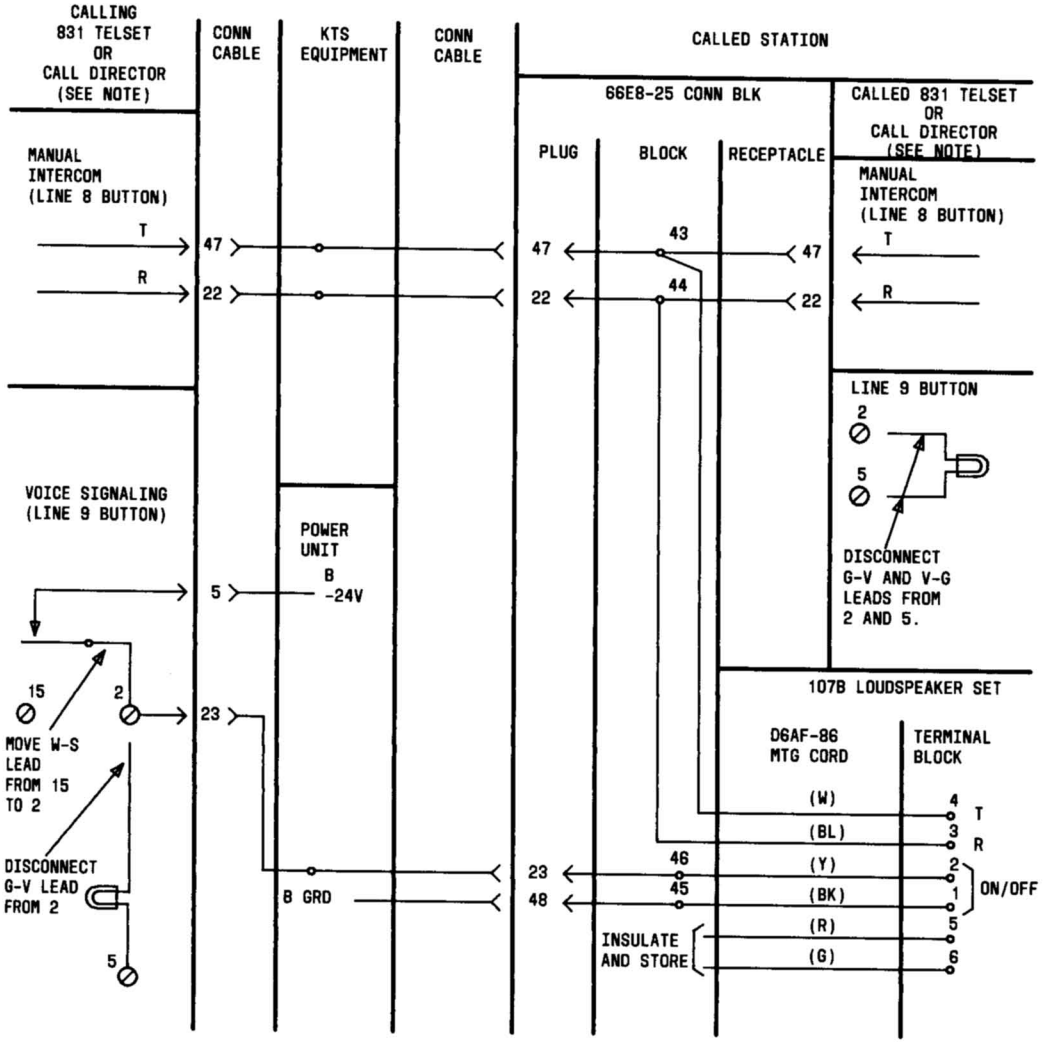

NOTE: TELSET TERMINAL DESIGNATIONS SHOWN FOR 831 SET ONLY;
SIMILAR DESIGNATION APPLY TO CALL DIRECTORS.

Fig. 2—Example of Connections for Voice-Signaling Arrangement With Manual Intercom Using 831-Type Telephone Sets

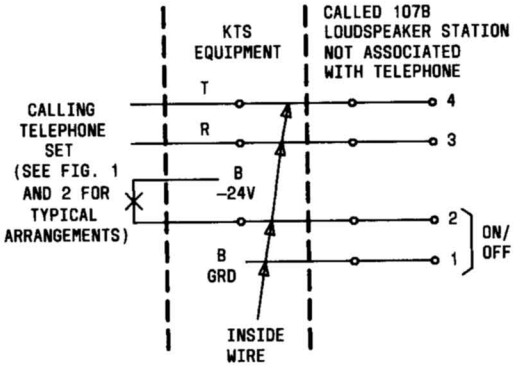

Fig. 3—Example of Standalone Voice-Signaling Arrangement

TABLE A

CONNECTIONS FOR SPOKESMAN POWER

TELEPHONE SETS	TERMINAL FOR BZ/BZ1 LEADS	SPARE TERMINAL	NUMBER OF SPARE LEADS	SEE SECTION
564HD (MD)		*	4	502-541-406
564HD (MD)	4,3	5,6	2	502-541-407
564HL	4,3	5,6	2	502-541-407
565HDR (MD)		1,2,3,4	4	502-541-410
565GK		1,2,5,6,9	5	502-541-414
565HK	5,6	1,2,3,4	4	502-541-415
565LK	5,6	1,2,3,4	4	502-541-416
630DAM	22,27	None†	None†	502-610-407
631DAM	22,27	None†	None†	502-610-407
636CAM	22,27	None†	None†	502-610-418
637DAM	22,27	None†	None†	502-610-418
830	12,14	None†	None†	502-701-101
831	12,14	None†	None†	502-702-101
852	20,21	None†	None†	503-701-102
2565GK		2,5,6,9	4	502-543-403
2565HK	5,6	2,3,4	3	502-543-405
2565LK	5,6	2,3,4	3	502-543-406
2630DAM	22,27	None†	None†	502-612-401
2631DAM	22,27	None†	None†	502-612-401
2636DAM	22,27	None†	None†	502-612-410
2637DAM	22,27	None†	None†	502-612-410
2830	12,14	None†	None†	502-701-101
2831	12,14	None†	None†	502-702-101
2832	20,21	None†	None†	502-701-102

* Auxiliary terminal 812559623 (P-25E962).

† Use 66E8 connecting block or 149B adapter for access to required leads.

TABLE B

COLOR ORDERING GUIDE

APPARATUS	COLOR	SUFFIX	COMCODE
Housing, 107B Loudspeaker Set	Black	—03	828150037
	Ivory	—50	828150508
	Green	—51	828150516
	Red	—53	828150532
	Light Beige	—60	828150607
	Yellow	—56	828150565
	White	—58	828150581
	Aqua Blue	—62	828150623

2A1 MATRIX BLOCK

IDENTIFICATION, INSTALLATION, CONNECTION, AND MAINTENANCE

1. GENERAL

1.01 This section contains information on the 2A1 matrix block (Fig. 1) which provides polarity guard circuits for use with key telephones arranged for multiline conferencing.

1.02 When this section is reissued, the reason for reissue will be listed in this paragraph.

2. IDENTIFICATION

2.01 The 2A1 matrix block consists of a molded plastic block equipped with 3-clip terminals, KS-21765 L2 diodes, and insulated straps connected to provide eight polarity guard circuits. One circuit is required for each conferenceable line at the associated key telephone sets.

2.02 The block is similar to the 66B3-50 type connecting block except that the 3-clip terminals are inserted only where required for holding the diodes and straps. It is 13.40 inches long, 2.80 inches wide, and 1.20 inches deep. Lead designations (T, R) are stamped on the fanning strips on both sides of the block.

2.03 The purpose of the polarity guard circuit is to isolate the associated station from battery reversals on the T and R line leads (Fig. 2). Normally, ground is on the input T lead and battery on the input R lead, and current flows through diode D1, the station circuit, and D3 in the direction of the diode arrows. A battery reversal would place ground on the input R lead and battery on the input T lead. However, the arrangement of diodes D2 and D4 forces the line current to continue flowing through the station circuit in the same direction when this occurs.

3. INSTALLATION AND CONNECTIONS

3.01 Mount the 2A1 matrix block on a flat, vertical surface in a location where leads from the associated line circuits and the station cut-down field can be conveniently connected to it. Use D inside wiring cable to connect the station (right) side of the block to the cut-down field. Terminate the leads from the line circuit on the left side of the block.



If a station requires line ringing on a particular line, connect the ringing leads from the key telephone set to the appropriate terminals on the line side of the matrix block, not to the station side.

3.02 Use a 714B tool to make terminations on the clip terminals of the matrix block. Refer to Section 461-604-100 for detailed instructions on the use of the 714B tool and other information on the 66-type connecting blocks.

4. MAINTENANCE

4.01 Maintenance of 2A1 matrix block is limited to replacement of defective diodes and adjustment and alignment of clip terminals.

NOTICE
Not for use or disclosure outside the
Bell System except under written agreement

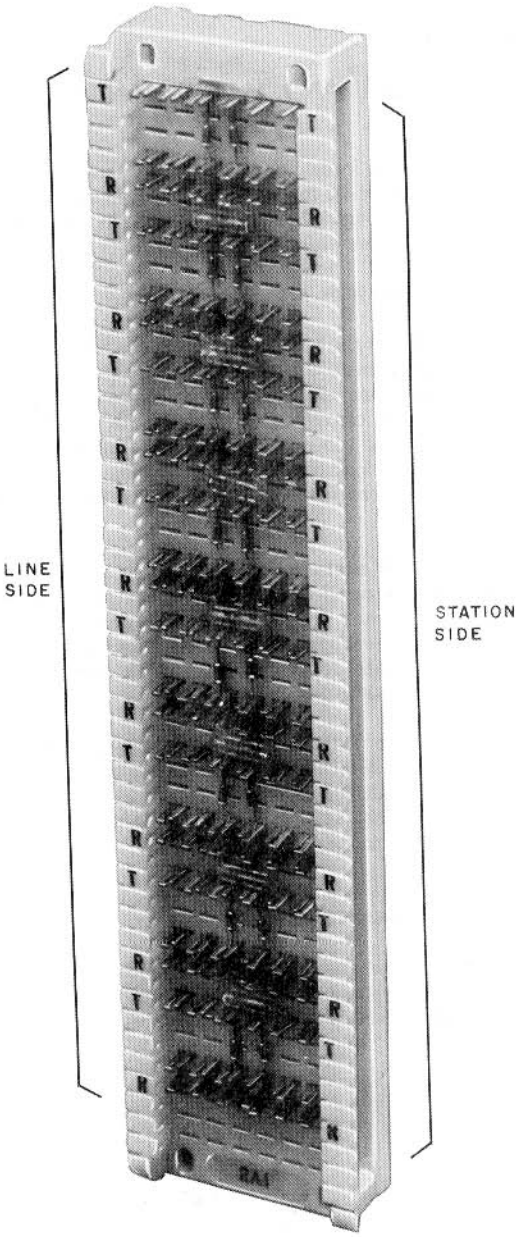

Fig. 1—2A1 Matrix Block

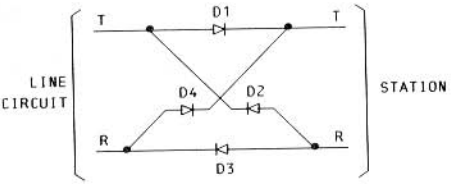

Fig. 2—Schematic of Polarity Guard Circuit

MESSAGE WAITING CONSOLES USED WITH 1A, 1A1, OR 1A2 KEY TELEPHONE SYSTEMS

1. GENERAL

1.001 This addendum supplements Section 518-010-111, Issue 2. Place this pink sheet ahead of Page 1 of the section.

1.002 This addendum is issued to add information on providing station-busy lamp feature to headset equipped CALL DIRECTOR® telephone sets.

2. CHANGES TO SECTION

2.001 Add headset equipped CALL DIRECTOR telephone set to Table A.

2.002 Delete Table B, Page 9.

2.003 Add Fig. 1.1.

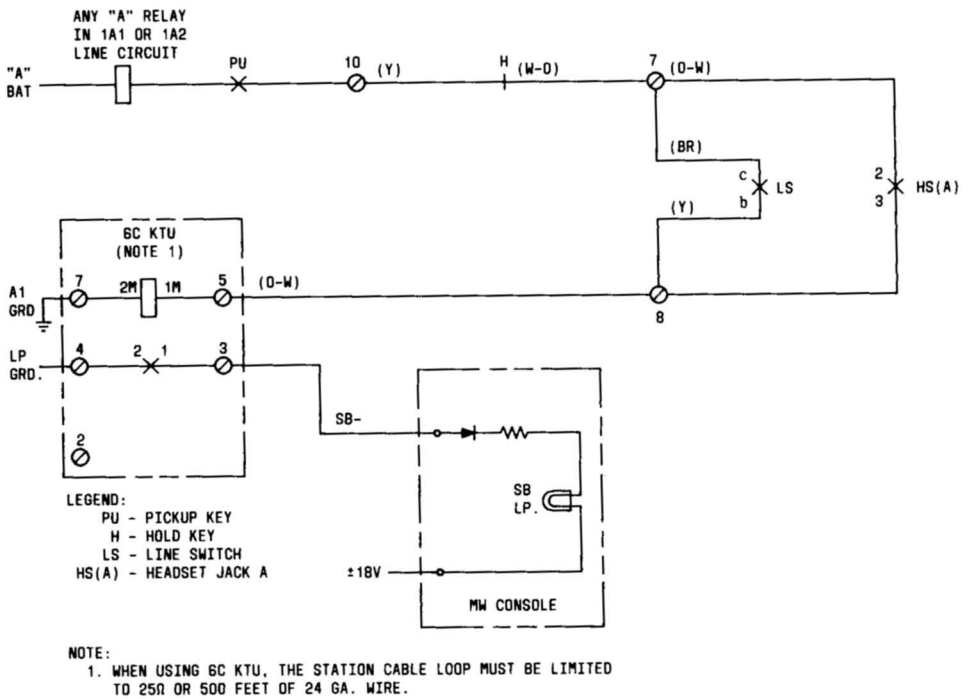

Fig. 1.1—Busy Lamp Control Circuit for Headset Equipped CALL DIRECTOR Telephone Sets

NOTICE
Not for use or disclosure outside the
Bell System except under written agreement

TABLE A

TELEPHONE SET TERMINATIONS FOR PROVIDING MESSAGE WAITING AND/OR STATION BUSY IN 1A, 1A1, OR 1A2 KTS (NOTE 1)

TELEPHONE SET	MOUNTING CORD LEADS							
	BL LEAD		L LEAD			LG LEAD		
	COLOR	SET TERMINAL	COLOR	MOVE FROM	MOVE TO	COLOR	MOVE FROM	MOVE TO
564HK/HL	Y-BR	1	O-Y	5	LH	Y-O	6	LG
565HD		L2	G-Y		HL	Y-G		HG
565GK (Note 2)		L2	S-W		1	G-R		2
2565GK (Note 2)		1	S-W		5	G-R		2
565HK		L2	O-Y	3	LH	Y-O	4	LG
2565HK		1	O-Y	3	LH	Y-O	4	LG
565LK		L2	G-BK	1	LH	BK-G	2	LG
2565LK		1	G-BK	2	LH	BK-G	2	LG
630/631A, B, C, D		6 or 12	Note 3			Note 3		
2630, 2631D		6						
630/631DA 2630/2631DA		L2	Note 4			Note 4		
634/635D 2634/2635D	Connect to Terminal 39 of 235- or 236-Type KTU (Note 7)		R-G		LG	G-R		5
634/635DA 2634DA/DAM 2635DA/DAM			Note 8			Y-G		22
636, 637A, B, C, D 2636C, 2637D	Fig. 1.1		Note 3			Note 3		
636, 2636CA 637, 2637DA			Note 9			Note 9		
830/2830C 831/2831C	Y-O	22	O-Y	12	20	Note 5		
851/2851B	Y-BR	L2	G-Y		21 (Note 6)	Y-G		12 (Note 6)

Note 1: Telephone set must be wired for station busy feature. Refer to service section in 502 Division for telephone set involved.

Note 2: These sets do not have a hold key. Either connect any unused line key lamp or use spare leads shown and connect to external lamp indicator using spare terminals or D-161488 connectors.

Note 3: Connect hold lamp leads (S-V, V-S) to spare mounting cord leads (G-Y, Y-G) in 1st module using spare terminals or D-161488 connectors.

Note 4: Connect hold lamp leads (G-Y, Y-G) to spare mounting cord leads (G-Y, Y-G) in 1st module.

Note 5: Move Y-G hold lamp lead from 21 to 4.

Note 6: Disconnect, insulate, and store BL leads.

Note 7: The 235- and 236-type KTU station line concentrators must be optioned for the station busy feature per Table B, Section 518-310-405.

Note 8: Connect G-Y from lamp 6 to R-G of mounting cord using a spare terminal or D-161488 connector.

Note 9: Connect hold lamp leads (G-Y, Y-G) to spare mounting cord leads (G-Y, Y-G) in 1st module using spare terminals or D-161488 connectors.

MESSAGE WAITING CONSOLES USED WITH 1A, 1A1, OR 1A2 KEY TELEPHONE SYSTEMS

1. GENERAL

1.01 This section provides information for providing station busy (SB) and message waiting (MW) features in 1A, 1A1, or 1A2 Key Telephone Systems (KTSs). The arrangement utilizes the MW consoles (6B1 and 7B1) used with COM KEY* systems (Fig. 1).

*Trademark

1.02 This section is reissued to add information on telephone sets used with station line concentrators.

1.03 This issue of the section is based on the following:

SD-69656-01, Issue 1—6A1 and 6B1 Selector Console Circuit

SD-69657-01, Issue 1—7A1 and 7B1 Selector Console Circuit

518-450-100, Issue 2—7A Communication System

518-450-102, Issue 2—14A Communication System.

2. DESCRIPTION

2.01 The SB feature provides an attendant at a KTS installation a visual indication of when a station is off-hook. The MW feature permits the attendant to illuminate a lamp, usually the HOLD key lamp, at a station as a signal for the station to contact the attendant.

2.02 The features are supplied using a 6B1 (19-station) or 7B1 (39-station) console. For message waiting the attendant depresses the push-to-operate, push-to-release button associated with the desired station. This supplies 10V AC to light a lamp at the station (usually the lamp under the HOLD key). If the station is off-hook, the SB lamp located under the MW button of the console will light under control of the station line switch.

▶*Note:* When more than one MW console is installed, the MW signal can only be retired at the console originating the signal since the key must be physically released.◀

2.03 At the stations in the system, the set normally must be equipped with a lamp in the HOLD key. In addition, if the SB feature is supplied, the telephone set must be wired for the station busy lamp feature. Any set having sufficient spare leads and an idle lamp can be wired for MW, but the SB feature cannot be used with those sets ▶equipped for headset operation due to an incompatibility in the method of wiring the busy lamp.◀

2.04 The 6B1 and 7B1 consoles require 10V AC (for MW) and 18V AC (for SB). Each 6B1 console requires 1 ampere and each 7B1 requires 2 amperes of 18V ac power. A maximum of three consoles of either type can be installed but special treatment of the 18V ac leads is required. More than one 18V ac lead may be required, depending on the size and number of consoles installed (Fig. 2 through 7).

2.05 Voltages for the consoles can be supplied from the associated key system power supply if sufficient capacity is available. Otherwise, use a 19-type power unit if one console is to be installed; or, if two or three consoles are required, use a 19-type for the 10V AC and a 215B1 or 215C1 for the 18V AC. Where space permits, the 215C1 power unit can be installed in the same mounting as the key equipment. The 215C1 can also be

NOTICE
Not for use or disclosure outside the
Bell System except under written agreement

mounted in a 16-type apparatus mounting, 23-inch relay rack, etc, using 99-type adapters. The 215B1 power unit is electrically equivalent to the 215C1 but is designed for wall mounting externally where other space is not available. The 215B1 is supplied with a cover.

3. INSTALLATION

3.01 Install the SB and/or MW features as follows:

(1) Install console(s) at attendant position(s).

(2) Run a connector cable (use A25B for 6B1 console or A50B for 7B1) from each console to a position convenient to the station cutdown field and the power supply.

(3) Mount the required 66-type connecting blocks and terminate cables as shown in Fig. 2 through 7. If a single 6B1 console is installed, only half the block is used. Multiple 7B1 consoles require two blocks, one for each binder group.

(4) Make sure 18V ac leads are terminated and strapped in multiple installations as shown. Connect 10V and 18V ac leads from power supply associated with key system or from a separately provided supply. The 18V ac leads should be fused at 2 amperes per lead as shown and should be at least 18-gauge wire.

(5) Cross-connect the BL, L, and if necessary, the LG leads, as required, from the station cutdown blocks to the 66-type connecting block. Refer to Tables A and B, depending on the set involved, for spare leads that can be used.

(6) Modify set to connect HOLD key lamp as MW indicator and, if necessary, install lamp in key. If SB is provided, modify set for station busy lamp according to the service section for the set involved in the 502 Division.

Note: The station busy consoles are not compatible with the station busy circuit used in headset-type CALL DIRECTOR® sets.



A. 6BI CONSOLE



B. 7BI CONSOLE

Fig. 1—6B1 and 7B1 Selector Consoles

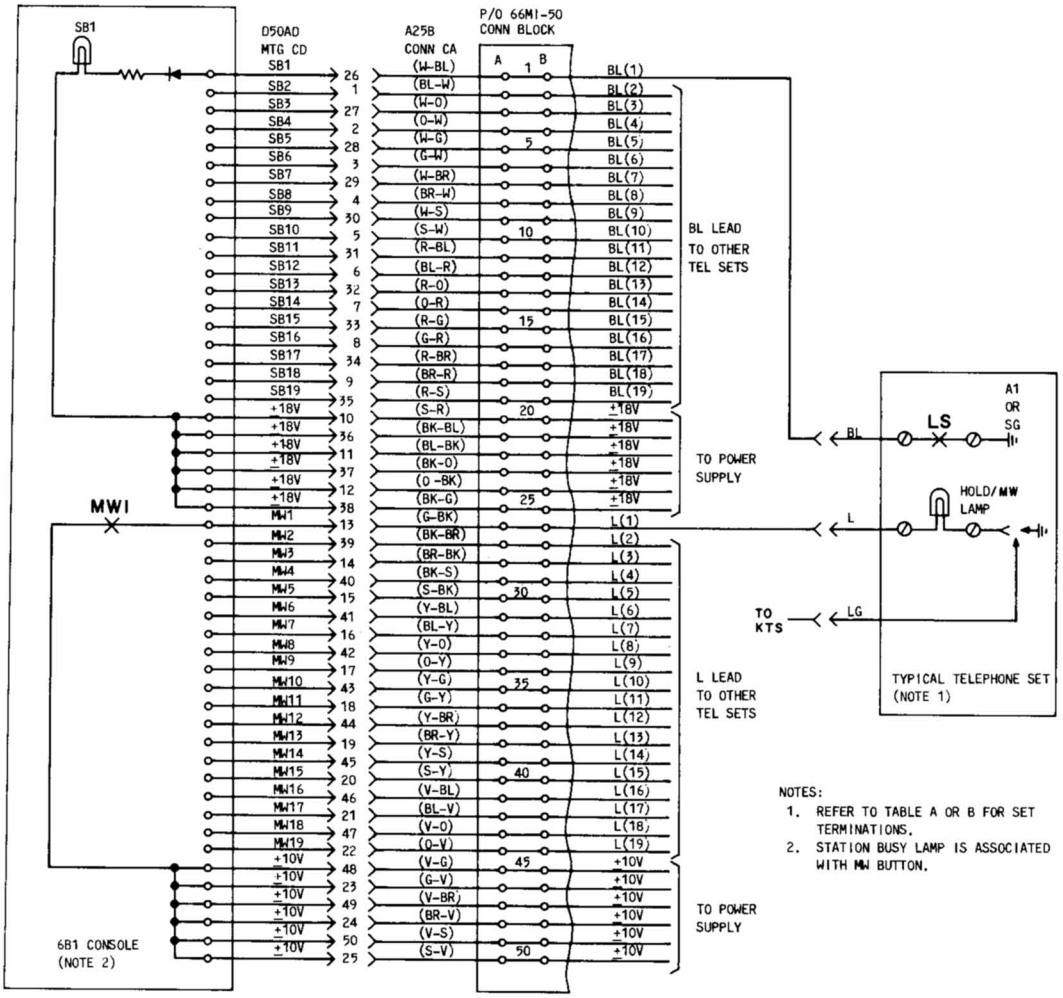

Fig. 2—6B1 Console Connections

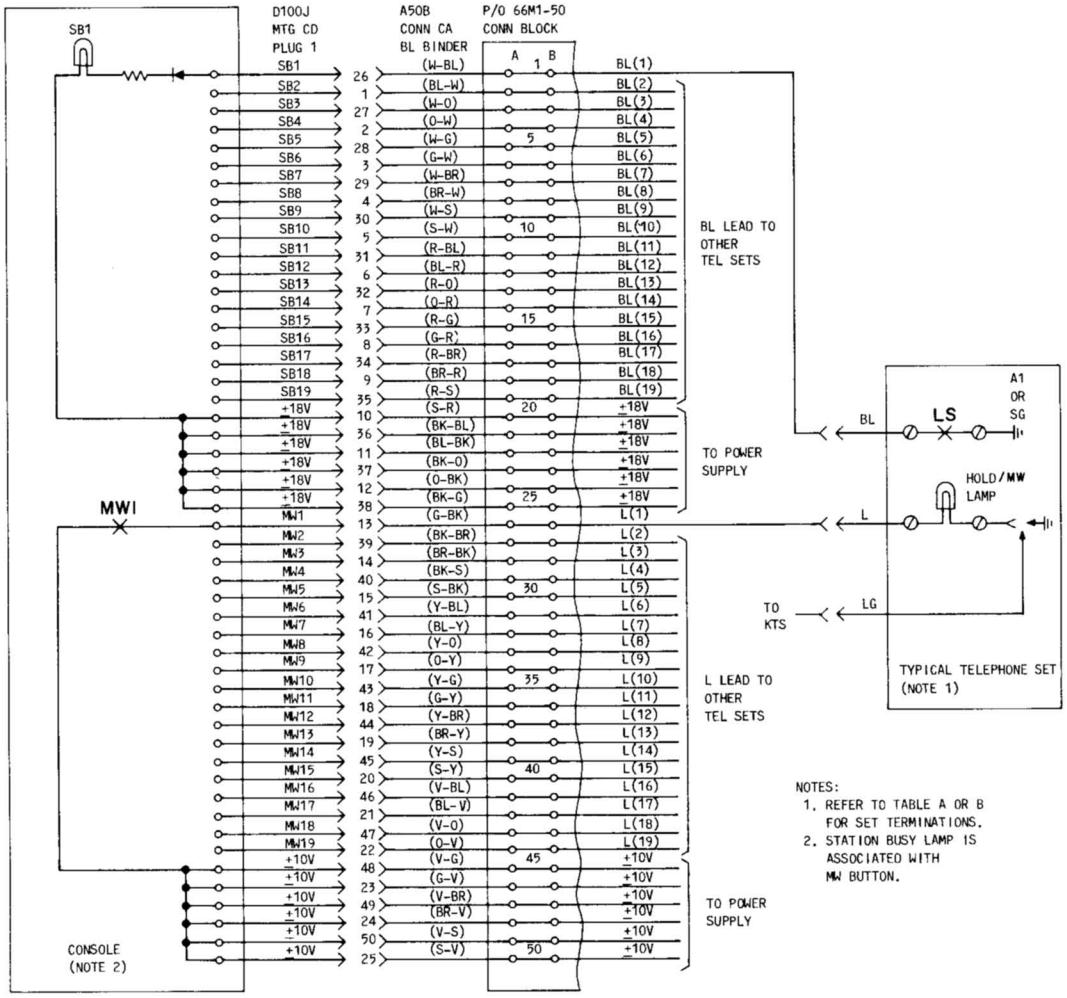

Fig. 3—7B1 Console Connections (Sheet 1 of 2)

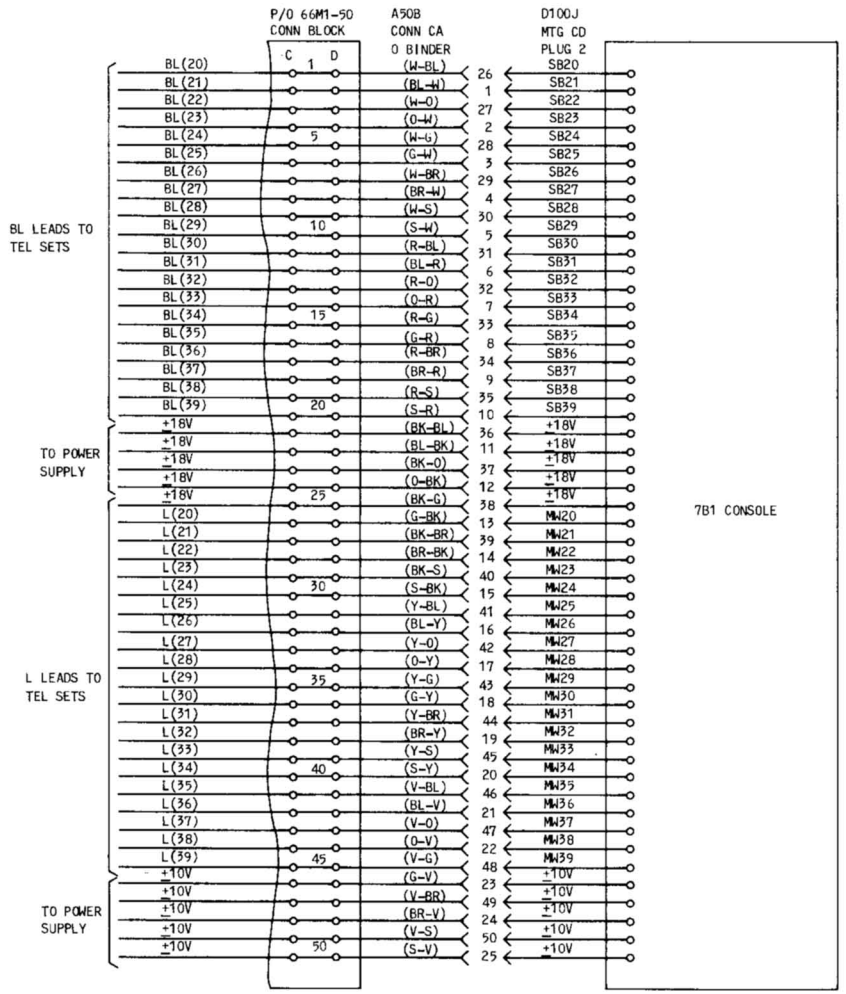

Fig. 3—7B1 Console Connections (Sheet 2 of 2)

TABLE A

TELEPHONE SET TERMINATIONS FOR PROVIDING MESSAGE WAITING AND/OR STATION BUSY IN 1A, 1A1, OR 1A2 KTS (NOTE 1)

TELEPHONE SET	MOUNTING CORD LEADS							
	BL LEAD		L LEAD			LG LEAD		
	COLOR	SET TERMINAL	COLOR	MOVE		COLOR	MOVE	
				FROM	TO		FROM	TO
564HK/HL	Y-BR	1	O-Y	5	LH	Y-O	6	LG
565HD		L2	G-Y		HL	Y-G		HG
565GK (Note 2)		L2	S-W		1	G-R		2
2565GK (Note 2)		1	S-W		5	G-R		2
565HK		L2	O-Y	3	LH	Y-O	4	LG
2565HK		1	O-Y	3	LH	Y-O	4	LG
565LK		L2	G-BK	1	LH	BK-G	2	LG
2565LK		1	G-BK	2	LH	BK-G	2	LG
630/631A,B,C,D		6 or 12	Note 3			Note 3		
2630, 2631D		6						
630/631DA 2630/2631DA		L2	Note 4			Note 4		
634/635D 2634/2635D	Connection Terminal 39 of 235- or 236-Type KTU (Note 7)		R-G		LG	G-R		5
634/635DA 2634DA/DAM 2635DA/DAM			Note 8			Y-G		22
830/2830C 831/2831C	Y-O	22	O-Y	12	20	Note 5		
851/2851B	Y-BR	L2	G-Y		21 (Note 6)	Y-G		12 (Note 6)

Note 1: Telephone set must be wired for station busy feature. Refer to service section in 502 Division for telephone set involved.

Note 2: These sets do not have a hold key. Either connect any unused line key lamp or use spare leads shown and connect to external lamp indicator using spare terminals or D-161488 connectors.

Note 3: Connect hold lamp leads (S-V, V-S) to spare mounting cord leads (G-Y, Y-G) in 1st module using spare terminals or D-161488 connectors.

Note 4: Connect hold lamp leads (G-Y, Y-G) to spare mounting cord leads (G-Y, Y-G) in 1st module.

Note 5: Move Y-G hold lamp lead from 21 to 4.

Note 6: Disconnect, insulate, and store BL leads.

Note 7: The 235- and 236-type KTU station line concentrators must be optioned for the station busy feature per Table B, Section 518-310-405.

Note 8: Connect G-Y from lamp 6 to R-G of mounting cord using a spare terminal or D-161488 connector.

TABLE B

TELEPHONE SET TERMINATIONS FOR PROVIDING MESSAGE WAITING WITH HEADSET-EQUIPPED CONCENTRATOR CALL DIRECTORS (NOTE 1)

TELEPHONE SET	HOLD LAMP		MOUNTING CORD	
	LEAD	COLOR	LEAD	COLOR
636, 637A,B,C,D 2636C, 2637D	L	S-V	L	G-Y
	LG	V-S	LG	Y-G
636, 2636CA 637, 2637DA (Note 2)	L	G-Y	L	G-Y
	LG	Y-G	LG	Y-G

Note 1: Busy lamp feature cannot be provided with these sets.

Note 2: Connect leads using spare terminals or D-161488 connectors.

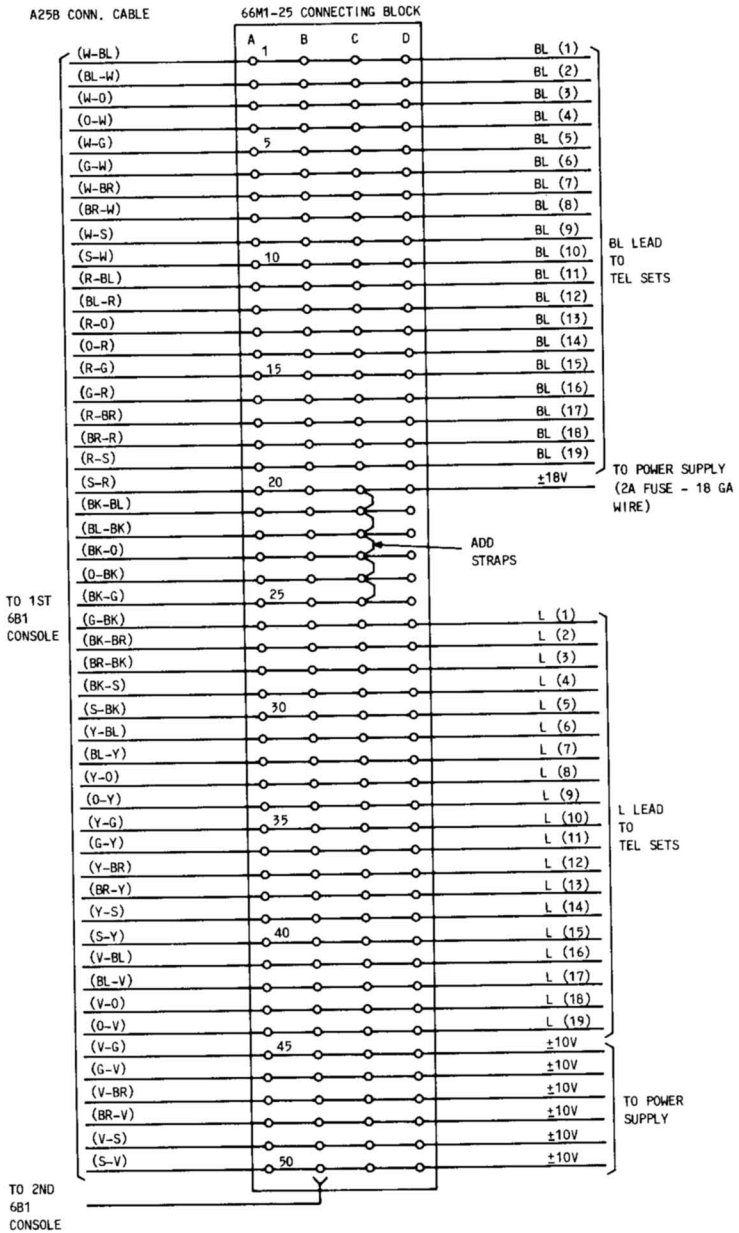

Fig. 4—Connections for Two 6B1 Consoles

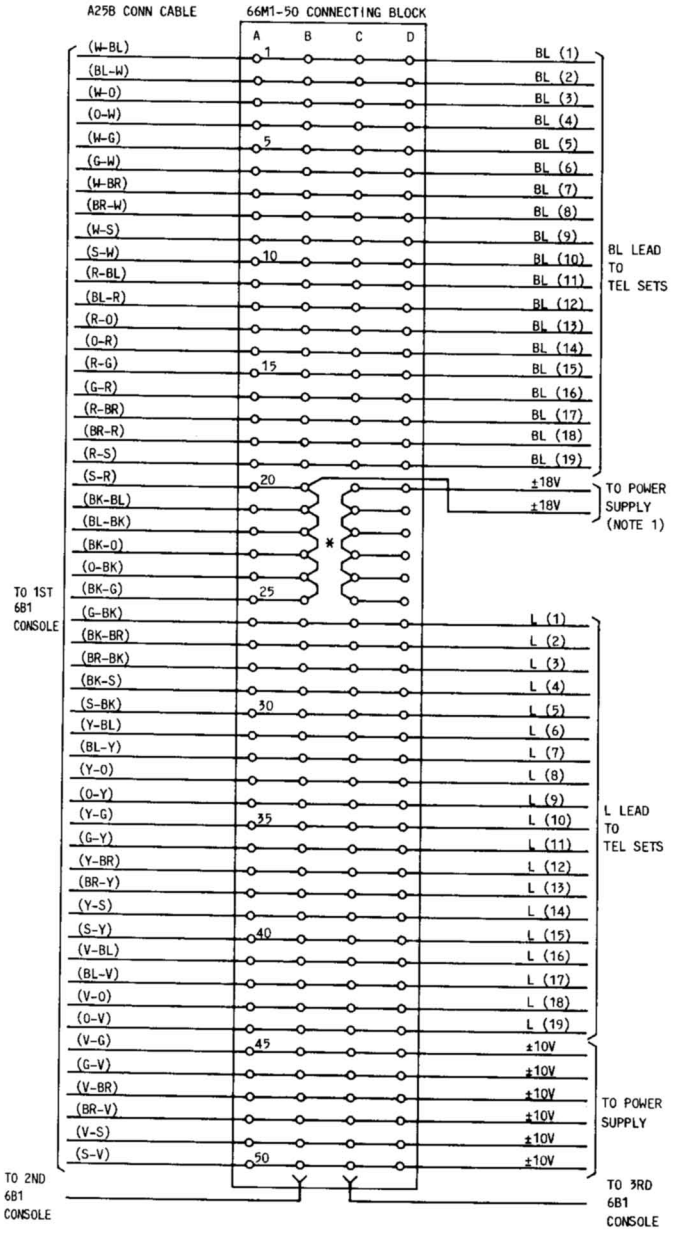

NOTES:

1. SEPARATELY FUSE EACH ±18V LEAD AT 2A. USE 18 GAUGE WIRE.
2. INSTALL B BRIDGING CLIPS BETWEEN COLUMNS B AND C IN ROWS 1-19 AND 26-50.

* ADD STRAPS - WHERE MORE THAN ONE LEAD IS REQUIRED ON A TERMINAL, USE 183B2 ADAPTER OR CONTINUOUS STRAPPING.

Fig. 5—Connections for Three 6B1 Consoles

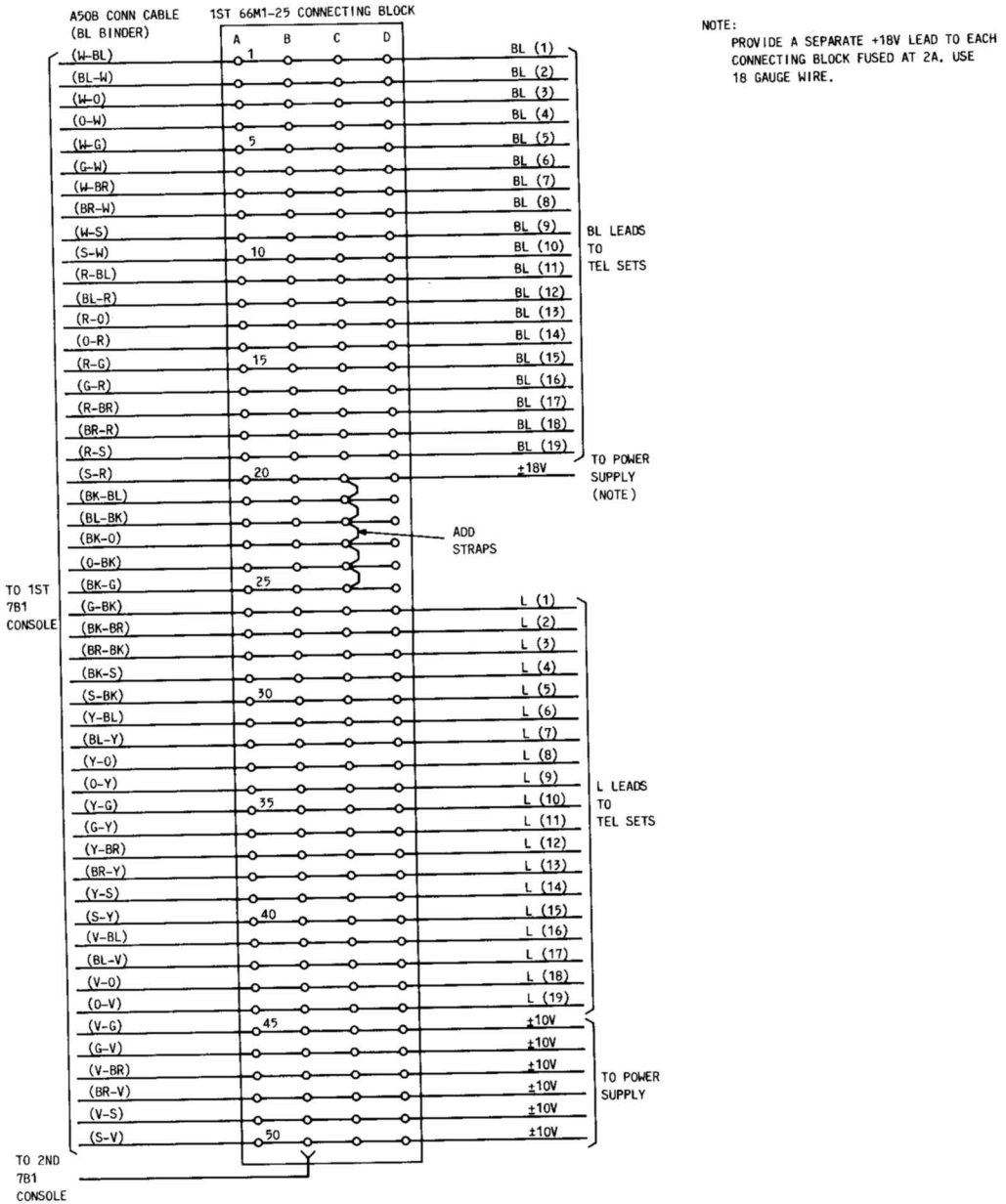

Fig. 6—Connections for Two 7B1 Consoles (Sheet 1 of 2)

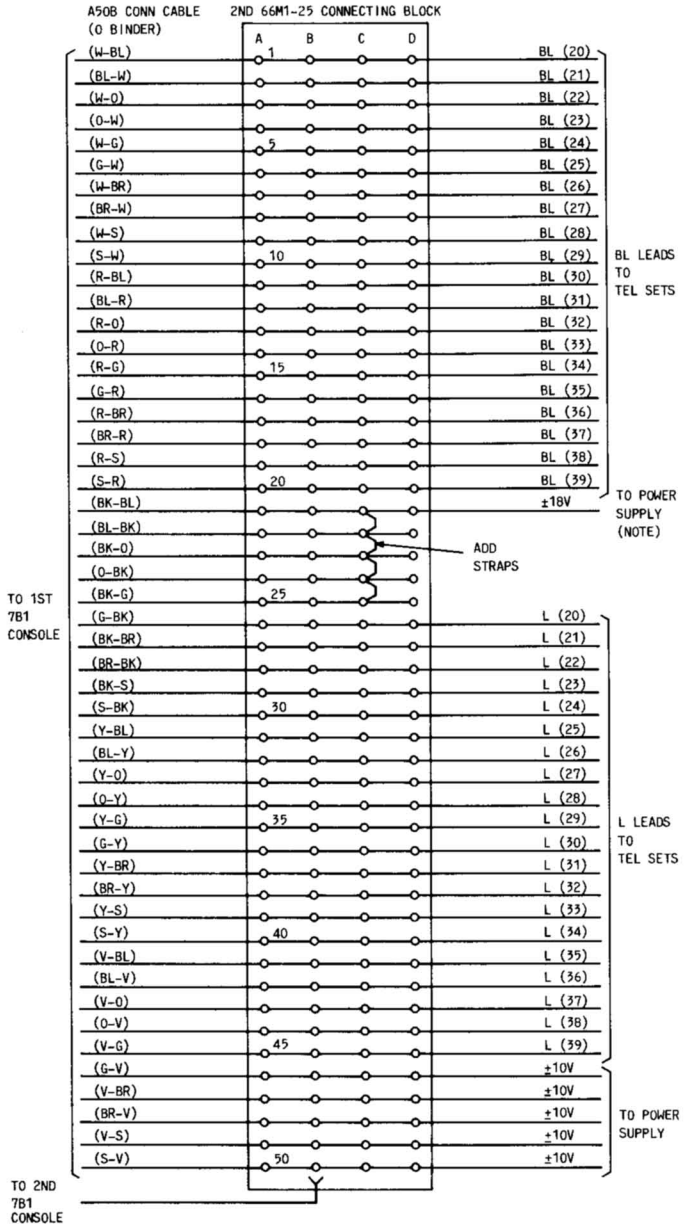

Fig. 6—Connections for Two 7B1 Consoles (Sheet 2 of 2)

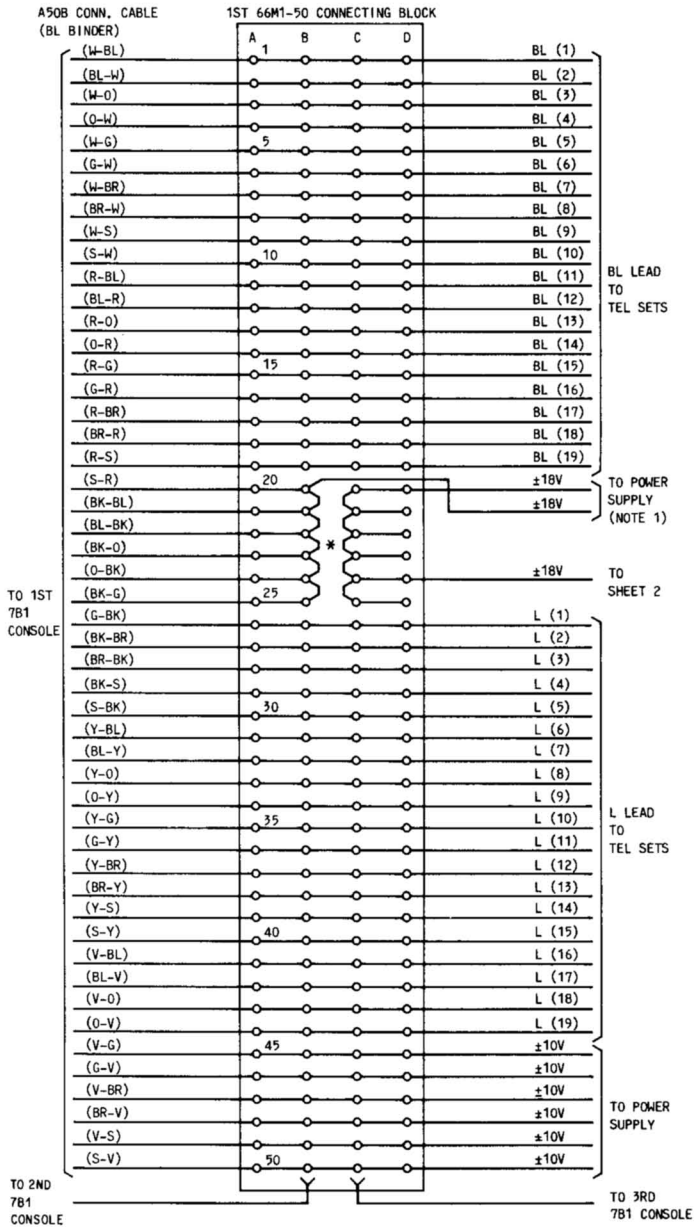

Fig. 7—Connections for Three 7B1 Consoles (Sheet 1 of 2)

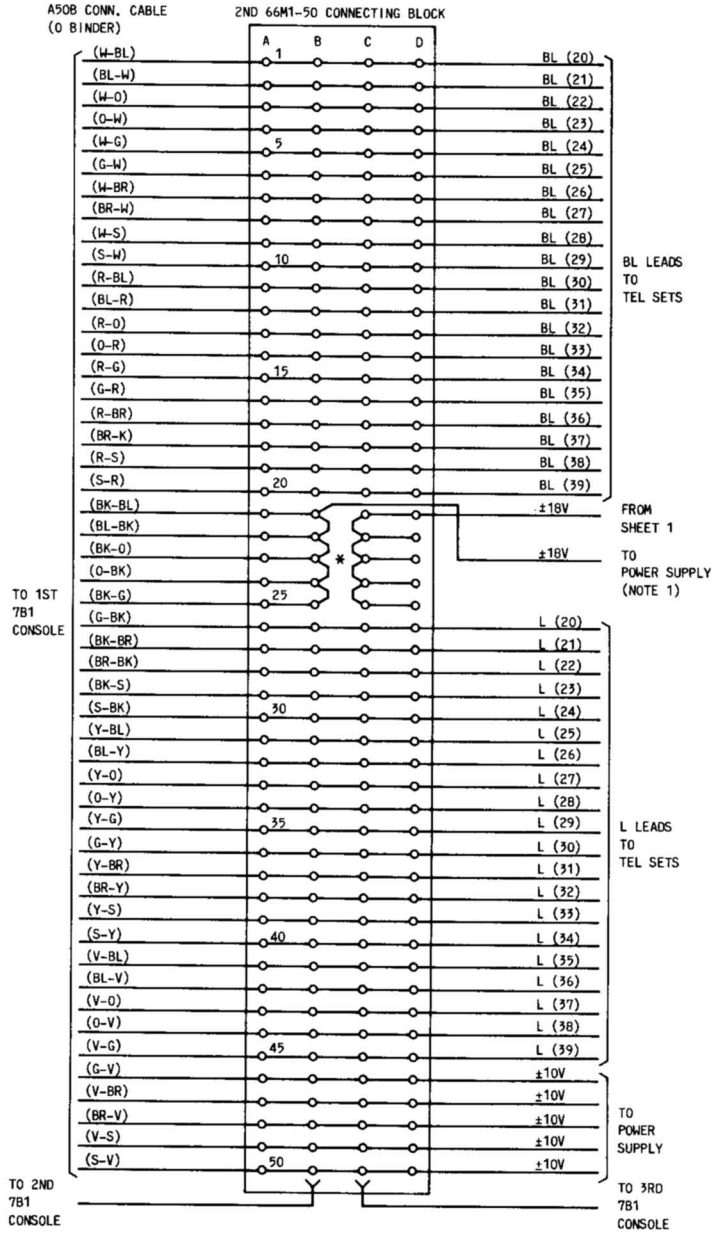

Fig. 7—Connections for Three 7B1 Consoles (Sheet 2 of 2)

HANDS-FREE ANSWERING ON INTERCOM
1A1, 1A2, 6A AND 6B KEY TELEPHONE SYSTEMS

1. GENERAL

1.01 This section provides information on the station adjuncts (Fig. 1) used in 1A1, 1A2, 6A and 6B KTSs to provide Hands-Free Answering on Intercom (HFAI).

1.02 This section is reissued to:

- Add information on the 6B KTS
- Add additional information on the station adjuncts (paragraphs 2.04 and 3.03)
- Add Note to Table A
- Revise Table B
- Revise Fig. 3, 4, and 5
- Add Fig. 6.

1.03 The HFAI feature is an intercom feature and is not to be connected to CO/PBX lines. The adjuncts are activated by incoming calls only and cannot be used to originate outgoing calls.

2. DESCRIPTION

2.01 Addition of the HFAI feature requires the installation of an adjunct at the station location as follows:

- HFAI on manual intercom or one intercom path—2A transmitter-receiver
- HFAI on ♦button-per-path♦ intercom—2B transmitter-receiver.

If HFAI is installed at a 1- or 2-link 6A KTS station, a 276A adapter must be wired between the KTS equipment and the adjunct on a one-per-adjunct basis.

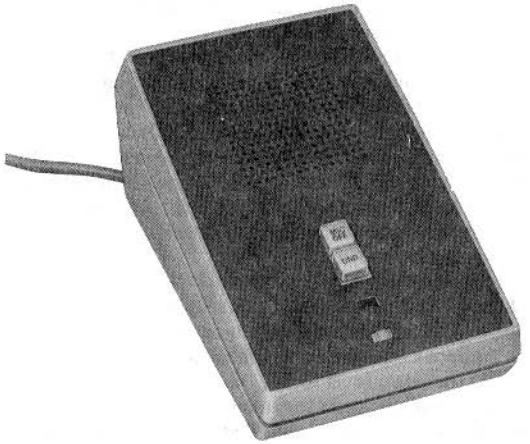

A. 2A TRANSMITTER-RECEIVER (SINGLE-PATH)

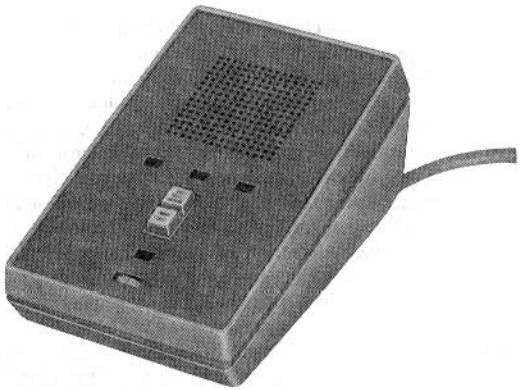

B. 2B TRANSMITTER-RECEIVER (THREE-PATH)

Fig. 1—2-Type Transmitter-Receiver

NOTICE
Not for use or disclosure outside the
Bell System except under written agreement

Printed in U.S.A.

2.02 The 2A transmitter-receiver permits a calling station to tone-signal another intercom station through the loudspeaker in the adjunct. If the called station does not want to receive incoming calls, depressing the do-not-disturb (DND) button will block turn-on of the adjunct and will furnish a DND tone to both parties. If the DND button is not depressed, the called party can answer without going off-hook. Conversation from the called station can also be blocked by depressing the MIKE-OFF button without affecting the incoming speech. A light emitting diode (LED) is provided to indicate when the microphone is turned on. If desired, the called station may depress the button on the key telephone set associated with the intercom and go off-hook; conversation is then through the handsets.

2.03 The 3-path adjunct (2B transmitter-receiver) operates in a similar manner but, in addition, is equipped with LEDs which indicate the intercom path the station is being called on. The called station can depress the associated pickup button on the key telephone set and go off-hook to use the handset. The path indicating LEDs will stay lit as long as the calling party is off-hook.

2.04 ▶The speech circuit of the transmitter-receiver adjunct contains a transmit channel (consisting of a microphone, an amplifier, and a voice-operated switch), a receive channel (consisting of a voice-operated switch, an amplifier, and a loudspeaker), and a control circuit which activates the transmit and receive voice-operated switches. The control circuit continuously compares the speech energy present in both the transmit and receive channels to determine which direction of transmission should be enabled in much the same manner as an ordinary speakerphone. That is, when the speech energy in the receive channel is greater than in the transmit channel, the control circuit activates the voice-operated switches to reduce the gain of the transmit channel and to increase the gain of the receive channel. When the speech energy in both channels is below the switching threshold, the voice-operated switches are automatically conditioned in the transmit mode (transmit channel at maximum gain and receive channel at maximum gain). For a more detailed description of the speech circuit, refer to drawings SD-69947-01 (2A transmitter-receiver) and SD-69948-01 (2B transmitter-receiver).◀

2.05 No modification of the intercom system is required in the 1A1, 1A2, or selector-only 6A KTSs for the addition of the adjuncts. The potential on the R lead (VS lead) from the intercom selector can be ±10V, -24V, or ±105V.

2.06 If the adjuncts are added to a 1- or 2-link 6A KTS, a 276A adapter must be added for each adjunct (Fig. 5). ▶When the 2A trasmitter-receiver is used with the DIALOG* intercom system (6B KTS), wire as shown in Section 518-411-100.◀

*Trademark of AT&T

2.07 The adjuncts are equipped with a volume control for adjusting the loudspeaker level.

2.08 ▶The 2A transmitter-receiver is compatible with the following intercoms:

401A KTU—Manual Intercom (Section 518-215-402)

407, 424 KTUs—Selector Only (Section 518-215-402)

6B Dialog—Multilink Intercom (Section 518-411-100)

6A Key Telephone System† (Section 518-114-431).

† Requires a 276A adapter per adjunct.

2.09 The 2B transmitter-receiver is compatible with the button-per-path intercom (Section 518-114-431) and multiple selectors when flashing lamps are provided.◀

ORDERING GUIDE

- Transmitter-Receiver, 2A‡—single-path HFAI
- Transmitter-Receiver, 2B‡—button-per-path HFAI
- Block, Connecting, 66E8-25 ▶or F76BA0089A◀ —order one for each location where adjunct cord cannot be brought into telephone set (see ***Note***)

Note: If station is already wired using 66E3-25, a 66E8-25 may not be required. ▶The 66E8-25 gives access to all 50 wires in a 25-pair cable while allowing further extension of the cable. See Section 461-604-103.◀

• Adapter, 276A—order one for each adjunct installed in a 1- or 2-link 6A KTS.

‡Refer to Table A for color information.

3. INSTALLATION

3.01 An adjunct must be installed at each station to be furnished with the HFAI feature. The adjunct can be wired by any of the methods outlined in paragraphs 3.04, 3.05, or 3.06.

3.02 The microphone in the 2A and 2B transmitter-receiver is located on the bottom of the base. To assure maximum pickup, the adjunct should not be placed on a surface that would obstruct the mike.

3.03 As previously stated in paragraph 2.04, the 2A and 2B transmitter-receivers contain voice-operated switches that are activated by a control circuit which compares the speech energy present in the transmit and receive channels, permitting only one-way speech transmission by selecting the channel with the highest speech energy. It is important, for this reason, to install the 2-type receivers in a location that is absent from noise interference sources such as typwriters, air conditioners, radios, etc. Sound energy from such sources will be picked up by the microphone and will increase the level of incoming speech that is required to activate the voice-operated switches and enable the receive channel. Symptoms of excessive noise will vary from occasional clipping of words and syllables for lower levels of interference to complete loss of inward transmission for noisy locations. Locations with interfering noise sources at sound pressure levels comparable to average conversational speech levels (or higher) will seriously degrade the performance of the transmitter-receivers and should be avoided.

3.04 In installations where all the leads are available on screw terminals such as in a 6-button key telephone set, the mounting cord from the adjunct can be terminated directly in the set (Fig. 3). The leads from the 2012B transformer, if used, can also be brought into the set using spare terminals or D-161488 connectors.

3.05 Where it is not desired to terminate the cords in the set, or where the required leads are not accessible such as in 10- and 20-button sets or CALL DIRECTOR® sets, a 66E8-25 connecting block must be used. In 20-button and CALL DIRECTOR sets, all intercom circuits should appear on the same key so that all leads can be found in one plug of the mounting cord and connector cable. Figure 4 shows connections for the single-path adjuncts using a 66E8 connecting block; Table B, Fig. 5 and 6 show the 3-path adjunct connections. Install the 66E8-25 connecting block as follows:

(a) Mount block in a location which provides access to the connection between the mounting cord and connector cable.

TABLE A

COLOR SELECTION

TRANSMITTER-RECEIVER			FACEPLATE		
CODE	COLOR	SUFFIX	CODE	COLOR	SUFFIX
2A	Black	—03	73A	Charcoal	—70
	Moss Green	—51		Light Green	—71
	White	—58		Light Gray	—73
	Light Beige	—60		Muted Beige	—75
2B	Black	—03	73B	Charcoal	—70
	Moss Green	—51		Light Green	—71
	White	—58		Light Gray	—73
	Light Beige	—60		Muted Beige	—75

Note: The 2-type transmitter-receiver will be shipped with color-coordinated faceplates. Cords will be satin-silver (-87) only.

(b) Break the mounting cord-connector cable connection and plug the cord and cable into the proper legs on connecting block (Fig. 2B).

(c) Terminate adjunct mounting cord leads on connecting block using 161A adapters. Power leads are terminated on screw terminals AC1 and AC2.

(d) Terminate inside wire from transformer on AC1 and AC2.

3.06 If the station is fed by inside wiring cable terminated in a 66E3-25 connecting block, the proper leads can be accessed on the connecting block using 161A adapters.

3.07 Figure 3 and 4 assume the intercom circuit is on the last button of a 6-button set. If intercom appears on another button, the T, R, A, L and LG leads must be connected to the leads associated with the proper button. In a like manner, Table B assumes the intercom circuits are on the last three buttons of the set. If they appear elsewhere, the adjunct cord will have to be wired to the proper leads.

3.08 The HFAI adjuncts are signaled over the R lead of the selector ◗or the buzzer lead of the manual intercom to the VS lead of the adjunct.◖ Signaling for the adjuncts must be separate from any other audible arrangements at the station. Buzzers or ringers cannot be connected on intercom at stations having an adjunct. This will require a separate lead to be used for intercom signaling if the station is also wired for common audible. The potential on the signaling lead from the selector can be ±10V, -24V, or ±105V.

3.09 At 1- and 2-link 6A KTS installations, a 276A adapter is required for each adjunct installed. Install the adapter at a location permitting access to the required station and KTS leads, and wire as shown in Fig. 5.

3.10 Power for the adjuncts can be derived either from a 2012B transformer or from the -24B supply in the KTS. If a 2012B transformer is used, the wiring is brought into the set or connecting block. Power from the KTS requires a spare cable conductor which is connected to either the AC1 or AC2 lead.

3.11 Do not power more than one adjunct from a 2012B transformer. If power is derived from the KTS, the drain should be figured on the basis of 90 milliamperes for each adjunct.

4. OPERATION

A. 2A *Transmitter-Receiver*

4.01 Operation of the single-path adjunct is as follows:

(a) The calling party dials the proper intercom code for the adjunct-equipped station.

(b) When dialing is complete, the microphone in the adjunct is turned on, as indicated by the MIKE-ON LED, and a single 1/2-second tone burst is heard by both parties.

Note: If the called party does not want to receive incoming calls on the intercom, the DND button must be depressed. With the DND depressed, both parties will hear a double tone burst when the station is called. To allow incoming calls, the DND button must be depressed again, releasing it.

(c) After hearing the single-tone burst, the calling station can voice-signal the called station. The called station may answer via the microphone in the adjunct.

(d) If the called party does not want local conversation or noise to be heard, the MIKE-OFF button must be depressed, at which time the LED will turn off. The called party may return to HFAI by releasing the MIKE-OFF button.

(e) If desired, the called station may also depress the pickup button associated with the intercom and go off-hook for 2-way conversation using the handset. Once the called station goes off-hook, the HFAI feature is canceled for that call.

4.02 ◗For operation of the 2A transmitter-receiver with the 6B KTS, refer to Section 518-411-100.◖

B. 2B Transmitter-Receiver

4.03 Operation of the 3-path adjunct is as follows:

(a) Calling and DND are the same as for single path.

(b) Upon completion of dialing, the MIKE-ON LED and the LED associated with the incoming intercom path are turned on and the single tone burst is heard at both stations.

(c) The balance of operation is the same as for single-path HFAI, except if called station wishes to converse over telephone, the intercom pickup button associated with lit LED must be depressed and the station go off-hook.

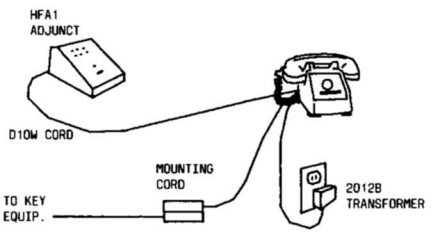

A. INSTALLATION WITH CORDS TERMINATED IN TELEPHONE SET

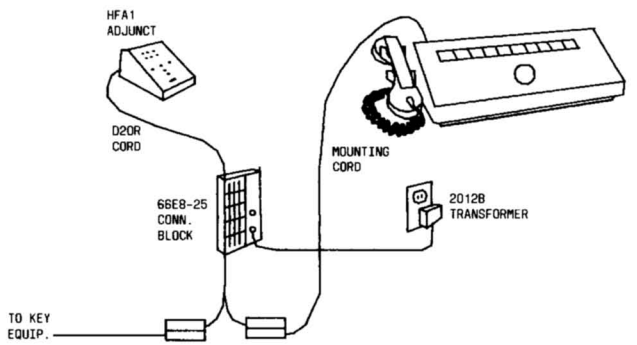

B. INSTALLATION USING 66E8-25 CONNECTING BLOCK

Fig. 2—Typical Installations—HFAI Adjuncts

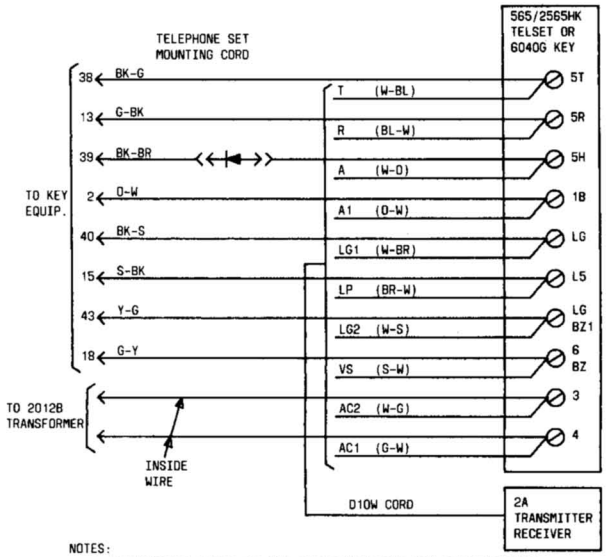

NOTES:

1. CONNECTIONS SHOWN ARE FOR INTERCOM ON THE 5TH PICKUP BUTTON. IF INTERCOM APPEARS ON ANOTHER BUTTON, THE T, R, A, LG1 AND LP LEADS MUST BE CONNECTED TO PROPER TERMINALS.
2. AUDIBLE SIGNAL IN SET CANNOT BE CONNECTED ON INTERCOM AT STATION HAVING VS-HFA1 ADJUNCT. CONNECTION SHOWN USE BUZZER LEAD AS VS LEAD. DISCONNECT BUZZER LEADS IN SET.
3. 2012B TRANSFORMER IS SHOWN CONNECTED TO SPARE TERMINALS 3 AND 4. IF THESE TERMINALS ARE IN USE, USE ANY SPARE TERMINALS OR D-161488 CONNECTORS.
4. IF POWER IS OBTAINED FROM KEY SYSTEM (-24B) USE ONE SPARE LEAD FROM KTS AND CONNECT TO EITHER AC1 OR AC2.
5. A DIODE IS NEEDED IN SERIES WITH THE A LEAD WHEN THE ADJUNCT IS USED WITH MANUAL INTERCOMS. CONNECTIONS FOR DIODE (456F- OR EQUIVALENT) MAY BE MADE BY INSERTING DIODE IN SERIES WITH THE A LEAD BY USING A SPARE TERMINAL IN TEL SET. (E.G. - CONNECT DIODE FROM 5H TO TERMINAL 2. MOVE BK-BR WIRE FROM 5H TO TERMINAL 2.

Fig. 3—Connections for 2A Transmitter-Receiver in Manual or Single Path Intercoms, With Cord Terminated in Telephone Set

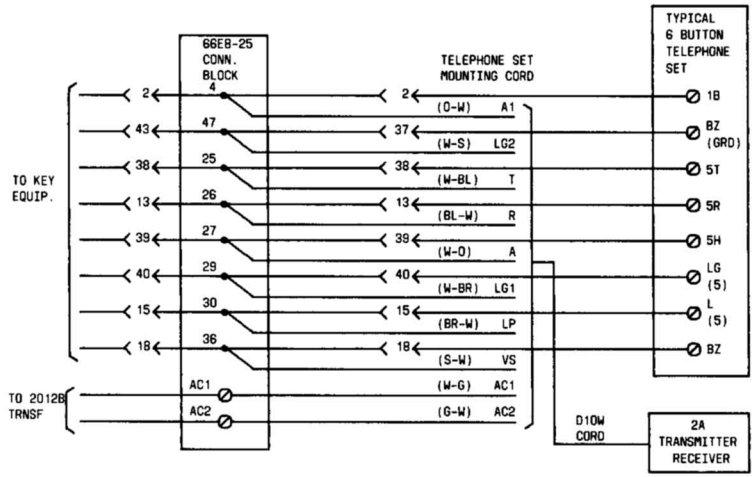

NOTES:
1. CONNECTIONS SHOWN ARE FOR INTERCOM ON 5TH PICKUP BUTTON. IF INTERCOM APPEARS ON ANOTHER BUTTON, T, R, A, LG1 AND LP LEADS MUST BE CONNECTED TO PROPER TERMINALS.
2. USE 161A ADAPTERS TO TERMINATE D10W CORD IN 66E8-25 CONNECTING BLOCK
3. AUDIBLE SIGNAL IN SET CANNOT BE CONNECTED ON INTERCOM AT STATION HAVING VS-HFA1 ADJUNCT. CONNECTIONS SHOWN USE BUZZER LEAD AS VS LEAD. DISCONNECT BUZZER LEADS IN SET.
4. 2012B TRANSFORMER IS SHOWN CONNECTED TO SPARE TERMINALS 3 AND 4. IF THESE TERMINALS ARE IN USE, USE ANY SPARE TERMINALS OR D-161488 CONNECTORS.
5. IF POWER IS OBTAINED FROM KEY SYSTEM (-24B), USE ONE SPARE LEAD FROM KTS AND CONNECT TO EITHER AC1 OR AC2.

Fig. 4—Connections for 2A Transmitter-Receiver in Manual or Single Path Intercoms, Using 66E8-25 Connecting Block

TABLE B

CONNECTIONS FOR 2B TRANSMITTER-RECEIVER

TYPICAL TEL SET DESIGNATIONS	D20R CORD		TERMINAL ON 66E8 CONN BLOCK (NOTE 3)		
	LEAD DESIG	COLOR	830/2830 TEL SET	831/2831 TEL SET	"CALL DIRECTOR®" TEL SET (NOTE 1)
TIP (1st intercom line)	T1	R-O	37	37	19
RING (1st intercom line)	R1	O-R	38	38	20
A LEAD (1st intercom line)	AH1	R-G	22	22	21
LAMP (1st intercom line)	LP1	BR-R	42	42	24
TIP (2nd intercom line)	T2	R-S	43	43	25
RING (2nd intercom line)	R2	S-R	44	44	26
A LEAD (2nd intercom line)	AH2	R-BL	16	16	27
LAMP (2nd intercom line)	LP2	W-O	48	48	30
TIP (3rd intercom line)	T3	W-BL	49	49	31
RING (3rd intercom line)	R3	BL-W	50	50	32
A LEAD (3rd intercom line)	AH3	W-BR	10	10	33
LAMP (3rd intercom line)	LP3	S-W	46	46	36
LAMP GRD (Note 2)	LG	W-S	41	41	17
A1 GRD (Note 4)	A1	O-W	4	5	5
BUZZER (BZ)	VS	G-R	34	34	34
	AC1	G-W	AC1	AC1	AC1
	AC2	W-G	AC2	AC2	AC2
	SPARE	R-BR	*	*	*
	SPARE	BL-R	*	*	*
	SPARE	BR-W	*	*	*

Note 1: Adjuncts cannot be used with concentrator-type CALL DIRECTORS. Connections shown are for intercom on the last three buttons of the key.

Note 2: LAMP GRD can be connected to any LG associated with intercom. Connections shown have LG associated with 1st intercom line.

Note 3: Intercom appearance for the 830/2830 is on the last three buttons. For the 831/2831, the intercom appears on the last three buttons of the first binder (Blue).

Note 4: If A1 GRD is not available in the binder the intercom appears in, the A1 lead of the adjunct may be tied to a second LG lead associated with the intercom.

*Insulate and store.

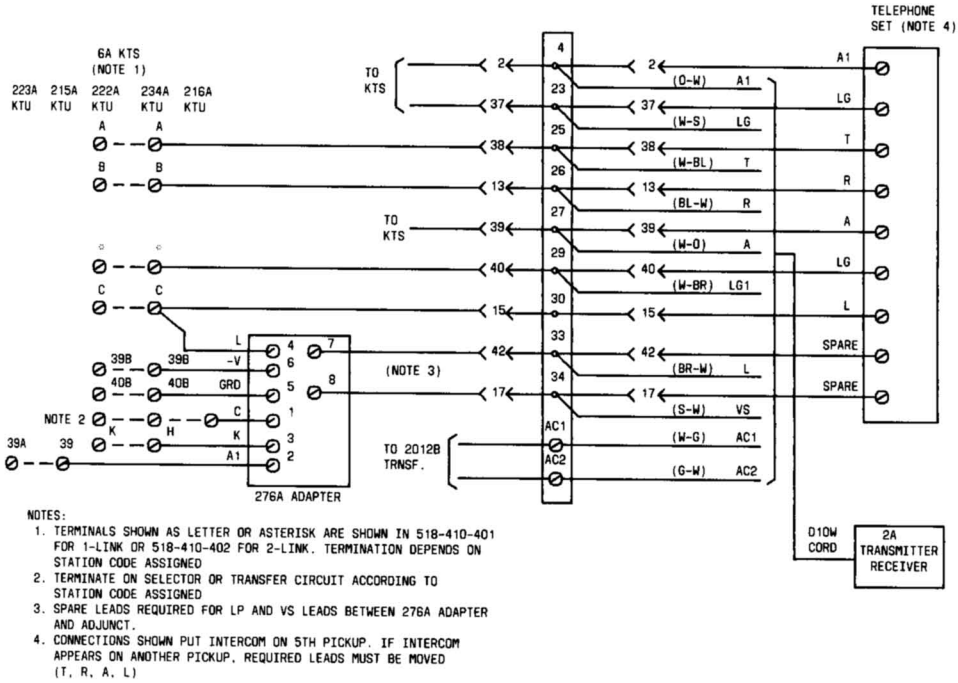

NOTES:

1. TERMINALS SHOWN AS LETTER OR ASTERISK ARE SHOWN IN 518-410-401 FOR 1-LINK OR 518-410-402 FOR 2-LINK. TERMINATION DEPENDS ON STATION CODE ASSIGNED
2. TERMINATE ON SELECTOR OR TRANSFER CIRCUIT ACCORDING TO STATION CODE ASSIGNED
3. SPARE LEADS REQUIRED FOR LP AND VS LEADS BETWEEN 276A ADAPTER AND ADJUNCT.
4. CONNECTIONS SHOWN PUT INTERCOM ON 5TH PICKUP. IF INTERCOM APPEARS ON ANOTHER PICKUP, REQUIRED LEADS MUST BE MOVED (T, R, A, L)

Fig. 5—Adjunct Connections in 6A Key Telephone System

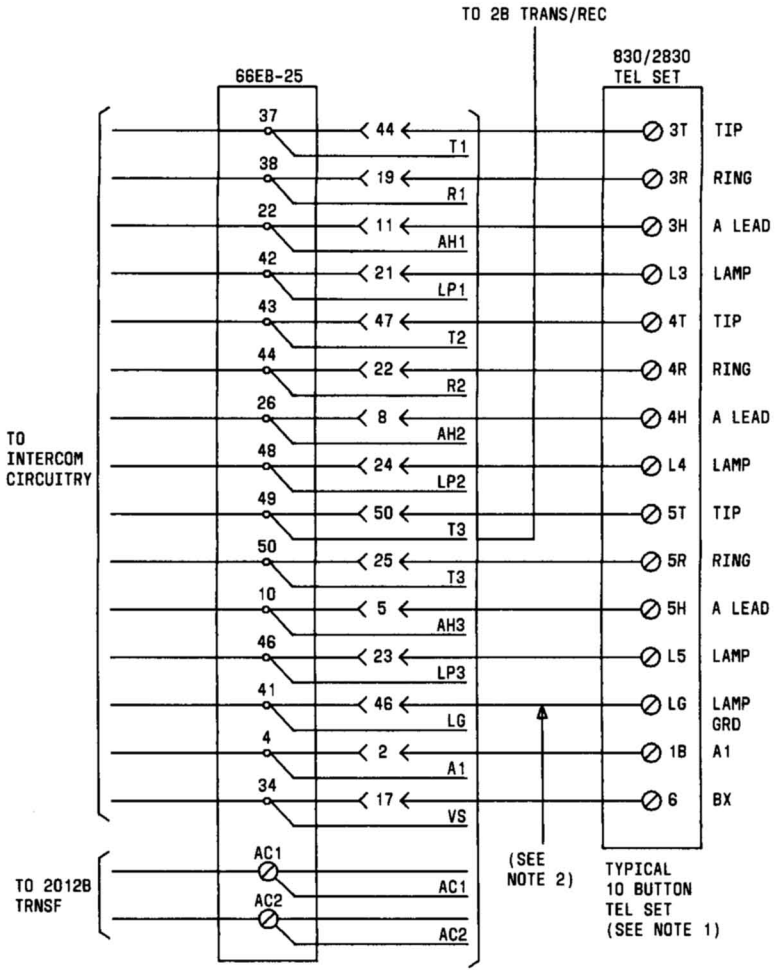

NOTES:
1. CONNECTIONSS SHOWN ARE FOR INTERCOM APPEARANCE ON THE LAST 3 BUTTONS.
2. LG LEAD CAN BE CONNECTED TO ANY LG ASSOCIATED WITH THE INTERCOM. CONNECTIONS SHOWN HAVE THE LG LEAD OF THE ADJUNCT CONNECTED TO THE FIRST INTERCOM PATH LG LEAD.

Fig. 6—Connections for 2B Transmitter-Receiver in Button-per-Path Intercom, With Cord Terminated in 66E8-25 Connecting Block

PAGING ADAPTER CIRCUIT

278A ADAPTER

1. GENERAL

1.01 This section contains identification, installation, connection, operation, and maintenance information for paging 278A adapter.

1.02 Whenever this section is reissued, the reason(s) for reissue will be listed in this paragraph.

1.03 This issue of the section is based on the following drawing:

- CD- and SD-69922-01, Issue 2

2. IDENTIFICATION

PURPOSE

2.01 Provides an intercom paging access circuit in 1A1, 1A2 and 6B intercom systems (DIALOG*) and the 32A communication system (HORIZON*).

ORDERING GUIDE

(a) Basic Unit:

Unit, Adapter, 278A - order one for each paging zone required (maximum 3). No additional unit is required for all zone paging.

(b) Associated Apparatus (order separately):

- Coupler, 33A - required when music-on-hold on CO lines and background music on the paging amplifier(s) is to be supplied.

(c) Replaceable Components:

- Fuse F1 70F .25A
- Fuse F2 70F .25A
- Fuse F3 70F .25A
- Fuse F4 70H .75A
- Fuse F5 70H .75A
- Kit of Parts D-180768 (additional option plugs)

*Trademark of AT&T

DESIGN FEATURES

2.03 The 278A adapter provides paging access circuitry for key system intercoms.

Other features are:

- Approximate dimensions are 5.2 inches wide, 5.0 inches long, and 1.68 inches high (Fig. 1).
- Exposed screw terminals for all customer-provided connections.
- ***Background music*** - a music input is provided via circuitry built into the 278A. Music can be fed to the paging amplifiers any time the paging access is not in use, and is only cut off to the zones that are being accessed. No additional circuitry is needed for this feature. However, if background music is to be provided to the paging amplifiers along with music-on-hold to the CO lines, a 33A coupler will be necessary.
- ***Busy-out*** - a toggle switch, accessible by the customer, on the adapter can be thrown to disable that particular zone. In the 1A1/1A2 configuration the lamp associated with the signal key is lit at this time to warn potential page calls of the busy condition, but does not electrically prevent a page. In the HORIZON and DIALOG systems, an attempt to access a zone in the busy-out

NOTICE
Not for use or disclosure outside the
Bell System except under written agreement

mode will result in busy tone being returned. This feature is expected to be used when customer equipment is being serviced, etc.

- ***Customer-provided tones*** - customer-provided tones for coffee breaks, lunch breaks, etc, are not prohibited nor provided by the access circuit. A tone source connection must be made on the amplifier side of the access circuit allowing superposition of tones with background music or voice pages.

- ***Contact closure*** - a spare contact closure with capacity for 0.25 amperes at 117 volts is provided any time the voice path is completed through to the amplifier. This can be used in locally engineered situations where amplifier control or behind the amplifier zone switching is required.

- ***Click Suppression*** - circuitry is employed in the 278A adapter to minimize audible clicks heard when the adapter is accessed or when the calling party terminates the page. It does not, however, act on transients that may occur during an actual page.

- Fuses are provided to protect the 278 adapter from excessive currents from the customer-provided equipment (CPE).

2.04 Features or service options are connected in the 278A adapter by means of option plugs. Option plugs are available by ordering a D-180768 Kit of Parts.

3. INSTALLATION AND CONNECTIONS

Note: All wiring should be completed before applying power to prevent damage to adapter components.

3.01 The 278A adapter is contained in a wall or shelf mountable housing.

3.02 All telephone company connections are made to the screw terminals under the cover. A separate terminal strip is provided for customer connections.

3.03 Refer to Table A for placement of options on the 278A adapter. Options should be added before connecting power.

3.04 Connections between the 278A adapter and the 1A1 and 1A2 KTS are shown in Fig. 2, 3, and 4.

3.05 Connections between the 278A adapter and the 68 intercom system (DIALOG) is shown in Fig. 5.

3.06 Connections between the 278A adapter and the 32A communication system (HORIZON) is shown in Fig. 6.

4. OPERATION

4.01 When the 278A is used with 1A1/1A2 Manual Intercoms, the circuit has two operational modes. The first utilizes two signaling buttons, one locking and one nonlocking. If the locking button is depressed at any off-hook station, the manual intercom is accessed but does not connect to the paging access circuit. When the second nonlocking button is momentarily depressed ground is placed on lead BZ2 through 1C1 to the lamp lead BZ1. Relay A operates and locks through its own contacts, strap J-K to the lamp lead or ground. The page connection is established and remains established until the calling party abandons the call. Lamping indication is given to both buttons for the duration of the page. The second operation requires one locking signaling button to be depressed by an off-hook station which in turn provides immediate access to the paging amplifier.

4.02 When the 278A is used in HORIZON paging access is accomplished via dialing a code. Up to three page zones and an all zone page are allowed, all under control of the system. A confirmation tone is heard by the person paging if the zone(s) desired is (are) not busy. Otherwise, a busy signal is generated.

4.03 When the 278A is used in DIALOG, paging access is accomplished via dialing a code. Up to three page zones and an all zone page are allowed, all under control of the system. A confirming tone is heard by the person paging if the zone(s) desired is (are) not busy. Otherwise, a busy signal is generated.

Power

4.04 The 278A adapter is designed to operate on -24 Vdc supply obtained from the associated

key system if capacity is available. Current drain is .030 amps at -24 Vdc.

5. MAINTENANCE

5.01 Maintenance is limited to checking for blown fuses, loose or broken connections and verification that the wiring is good.

5.02 When trouble is suspected in the 278A unit have customer remove all wiring from terminals C1, C2, CT, CR, M1, M2 and GND, then replace unit.



Do not attempt any tests or repairs to the CPE.

5.03 When in the judgment of repair personnel the trouble is located in the CPE, the customer should be notified so that proper maintenance can be initiated.

6. COMPATIBILITY

6.01 The 278A adapter is compatible with the following:

- DIALOG and HORIZON
- 211A, 232B, and 401 KTUs - Manual Intercom

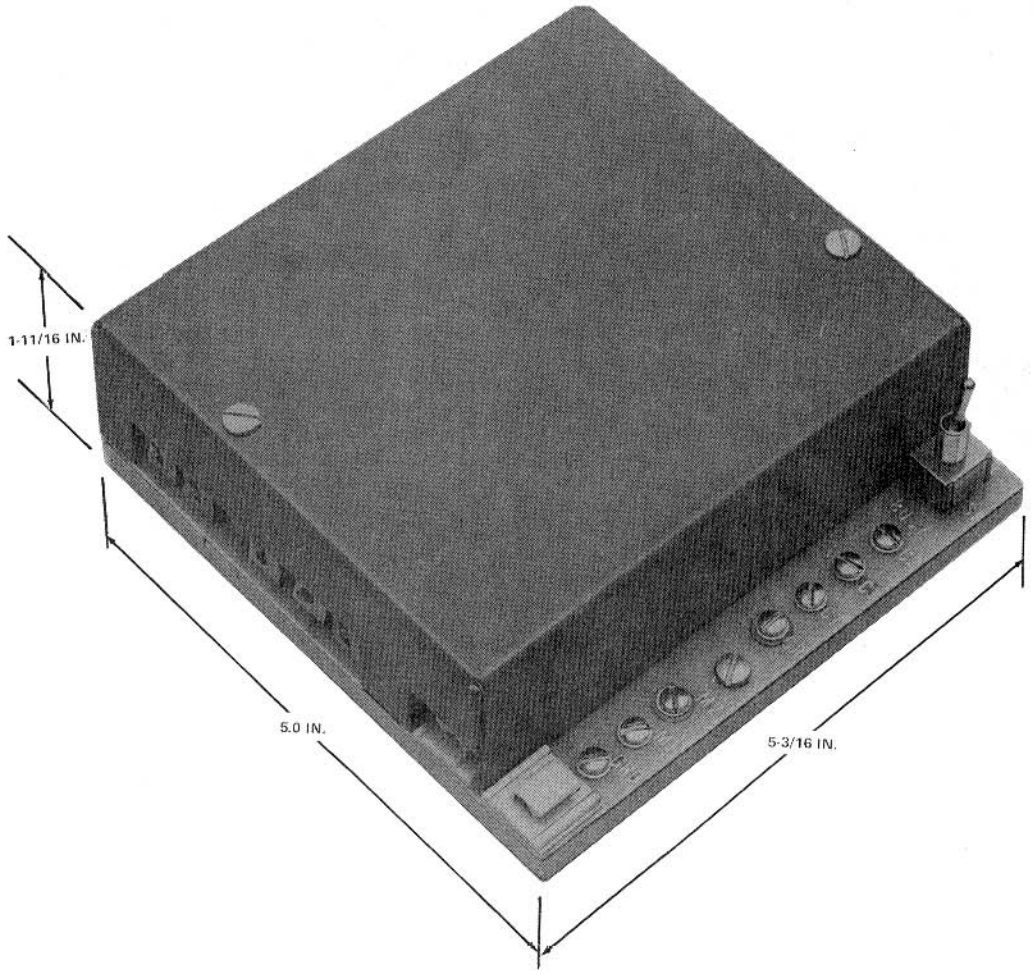

Fig. 1—278A Paging Adapter

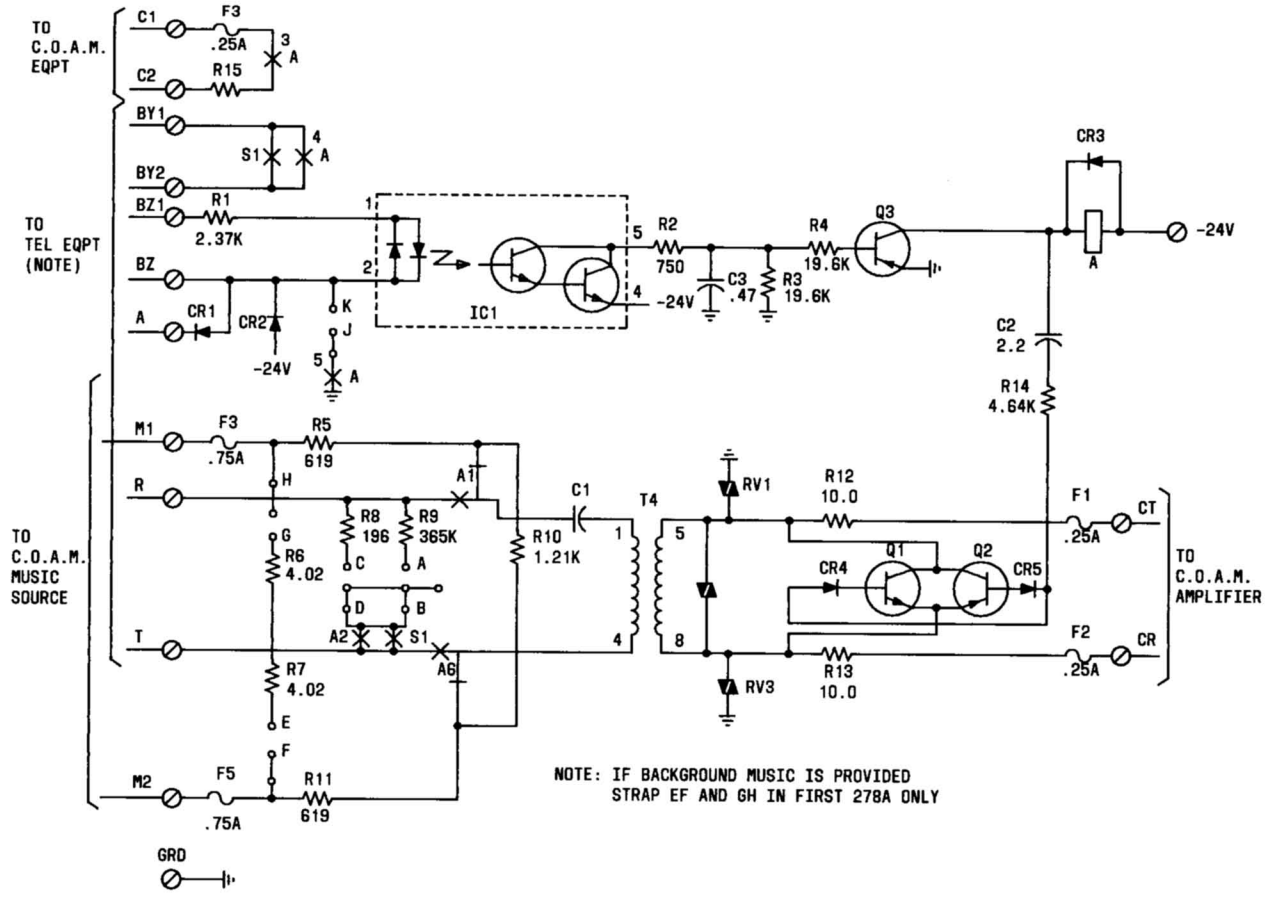

Fig. 2—Schematic Diagram - 278A

TABLE A

OPTION STRAPPING

OPTION	TERMINAL									
	A	B	C	D	E	F	G	H	J	K
DIALOG	o	o								
HORIZON			o	o						
1A1: 211A or 232B, KTU (nonlocking)									o	o
1A2: 401A KTU (nonlocking)									o	o
1A2: 401A KTU (locking)										
Background Music*					o	o	o	o		

* Provide in first 278A only.

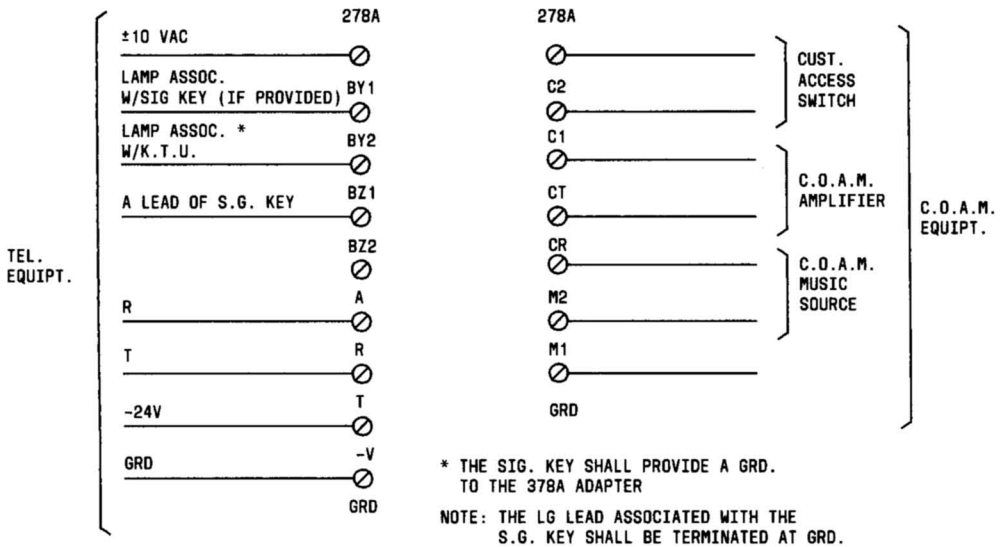

Fig. 3—Connections for 1A/1A2 (Nonlocking Sig. Key)

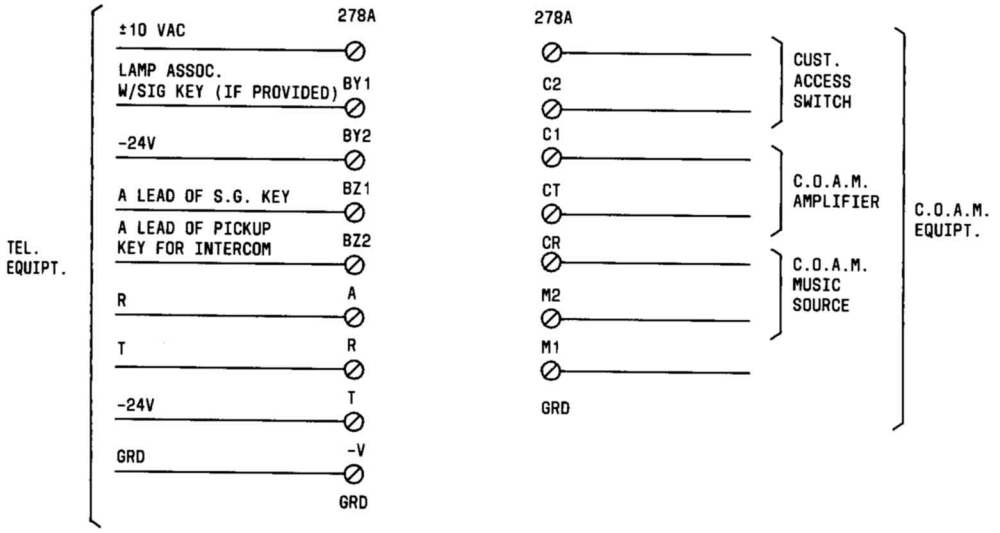

Fig. 4—Connections for 1A2 (Locking Key)

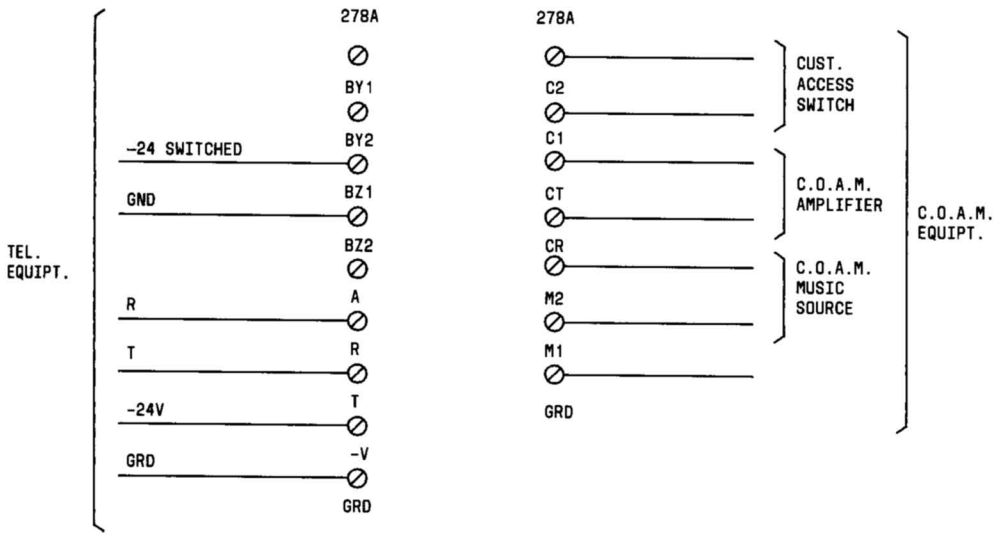

Fig. 5—Connections for 6B Intercom System (DIALOG)

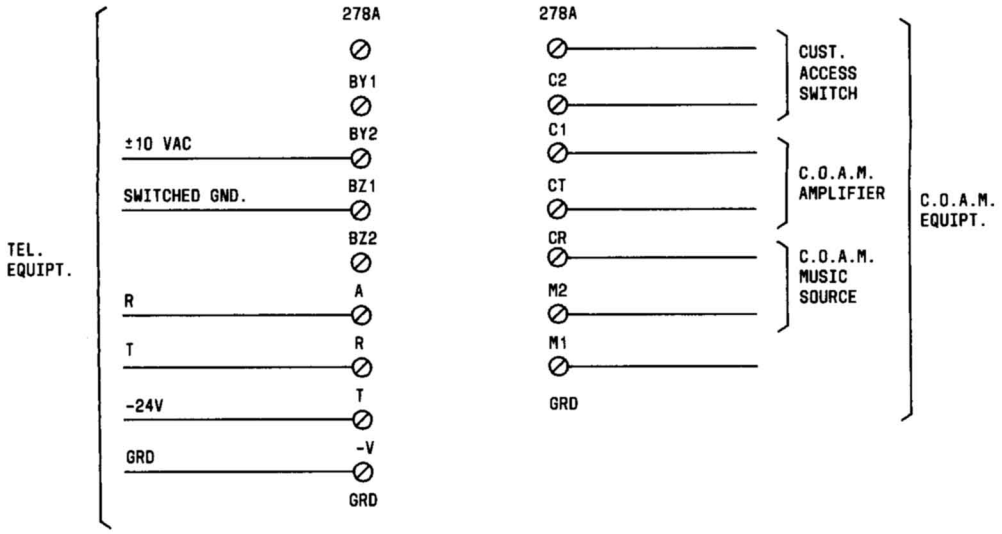

Fig. 6—Connections for 32A Communication System (HORIZON)

SERVICE

1A KEY TELEPHONE SYSTEM

50-TYPE PACKAGED UNITS

1. GENERAL

1.01 This section provides connection information for strip mounted key telephone units of the 1A Key Telephone System.

1.02 Information in this section was formerly contained in Sections 518-112-430 and 518-112-431 which are hereby canceled.

1.03 For additional information, refer to the following SDs:

- SD-69136-01—Key Telephone system No. 1A, Line and Signaling Circuit
- SD-69199-01—Key Telephone System No. 1A, Intercommunicating Line Circuit with Dial Selection
- SD-69105-01—Key Telephone System No. 1A, Private Line Circuit

2. CONNECTIONS

2.01 When central office or building battery is used and the fuses at the supply are not readily accessible, fuse as shown in Table A.

2.02 *Connection Index:*

Fig. 1—50-Type Key Telephone Units, Connections

Fig. 2—51A Key Telephone Unit, Schematic

Table A—Fusing Arrangement for Central Office or Building Battery

Fig. 3—52A Key Telephone Unit, Schematic

Fig. 4—53A Key Telephone Unit, Schematic

Fig. 5—54A Key Telephone Unit, Schematic

Fig. 6—55A Key Telephone Unit, Schematic

Fig. 7—56A Key Telephone Unit, Connections

Fig. 8—56A Key Telephone Unit, Schematic

Fig. 9—57A Key Telephone Unit, Schematic

© American Telephone and Telegraph Company, 1970
Printed in U.S.A.

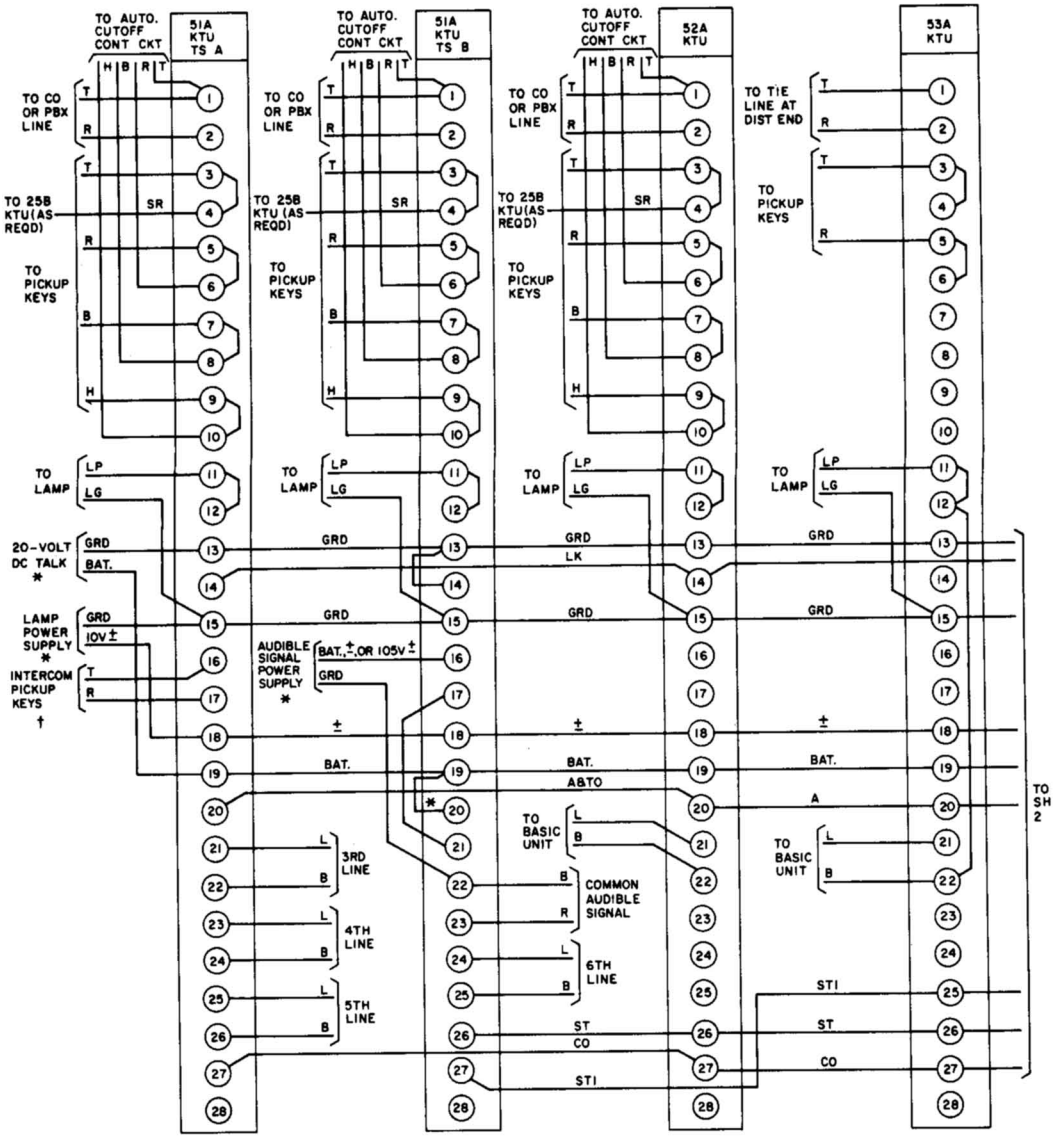

* CONNECTIONS SHOWN ARE FOR J86731D, LIST 1 OR J86731A LIST 4 OR LIST 6 (101G) POWER PLANT. IF CENTRAL OFFICE OR BUILDING BATTERY IS USED AND FUSES AT SUPPLY ARE NOT READILY ACCESSIBLE, FUSE AS SHOWN IN TABLE A. IF FUSES AT SUPPLY ARE READILY ACCESSIBLE AND THE MAXIMUM CURRENT DRAIN TO A SYSTEM DOES NOT EXCEED 1.6 AMPERES, NO CIRCUIT FUSES AT EQUIPMENT ARE REQUIRED. WHEN USING TABLE A, REMOVE STRAP ON TS B OF 51A KTU BETWEEN TERMINALS 19 AND 20.

† FOR LINE BUSY LAMP ON INTERCOMMUNICATING LINE, ADD WIRING ON 51A KTU AS FOLLOWS: 3 TOP OF BF RELAY TO 1 BOTTOM OF SR RELAY 4 TOP OF BF RELAY TO TS A 28 OR H.B. JONES TERMINAL (LP LEAD).

Fig. 1—50-Type Key Telephone Units, Connections (Sheet 1)

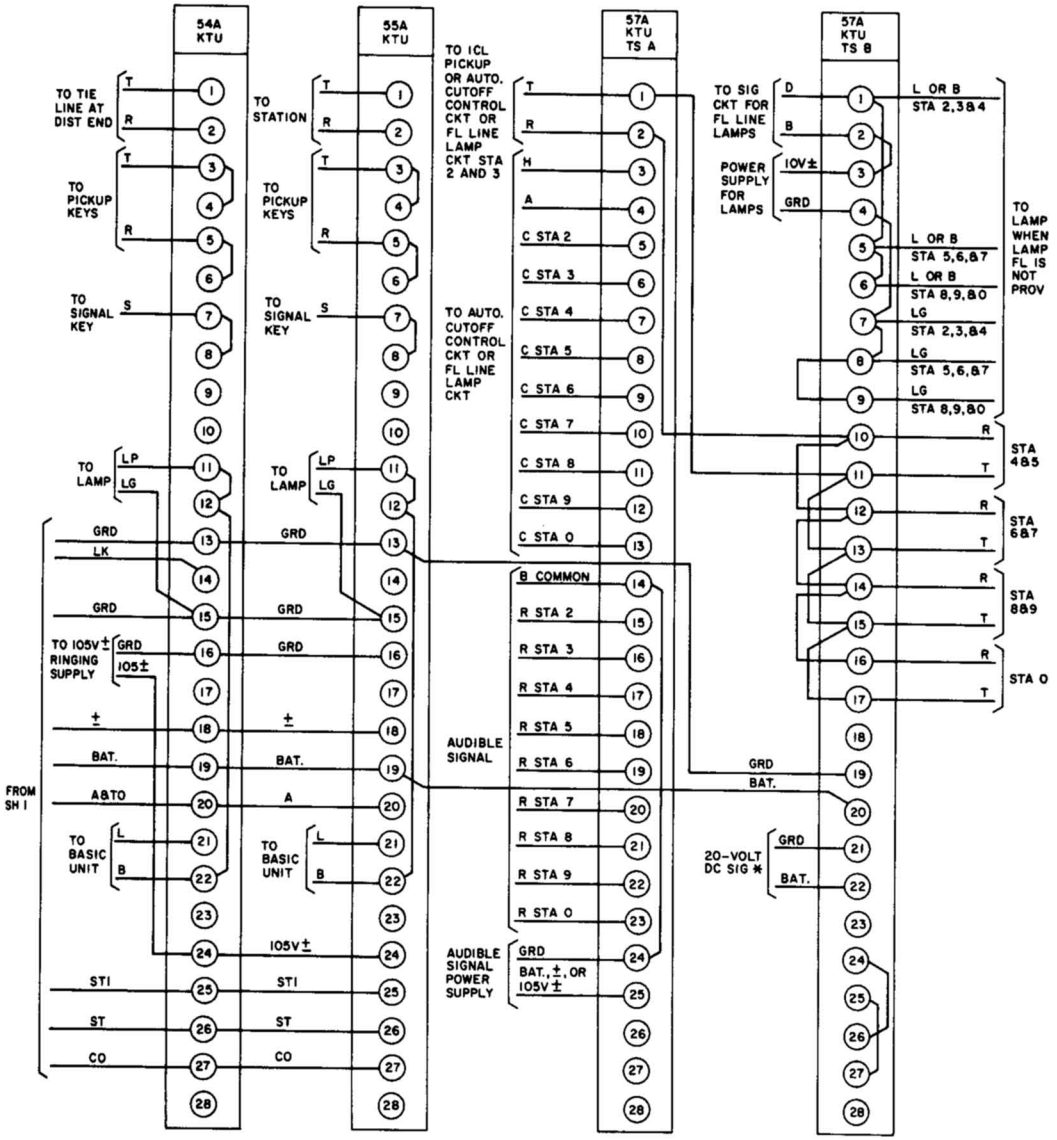

Fig. 1—50-Type Key Telephone Units, Connections (Sheet 2)

TABLE A

FUSING ARRANGEMENT FOR CENTRAL OFFICE OR BUILDING BATTERY

LEAD DESIG	FUSE	51A TS A	57A TS B	52A	53A	54A	55A	57A TS A	57A TS B
GRD	1‡	13	13	13	13	13	13		
BAT.		19							
BAT.	2‡		19						
BAT.	3‡			19					
BAT.	4‡				19				
BAT.	5‡					19			
BAT.	6‡						19		
GRD	Misc†		14-22						
BAT.			16-20*						
Lamp GRD	‡	15	15	15	15	15	15		4
BAT.	‡	18	18	18	18	18	18		3
GRD	‡								19
BAT. A	‡								20
GRD	‡								21
BAT. B	‡								22
GRD	‡								24
BAT. C	‡								25

* Do not strap 19 to 20 on 51A KTU TS B.

† One 2-amp fuse per 36 51A lamps; or when lamp battery is 48 volts dc from central office, fuse with 1-1/3 amp fuse.

‡ One 2-amp fuse per circuit.

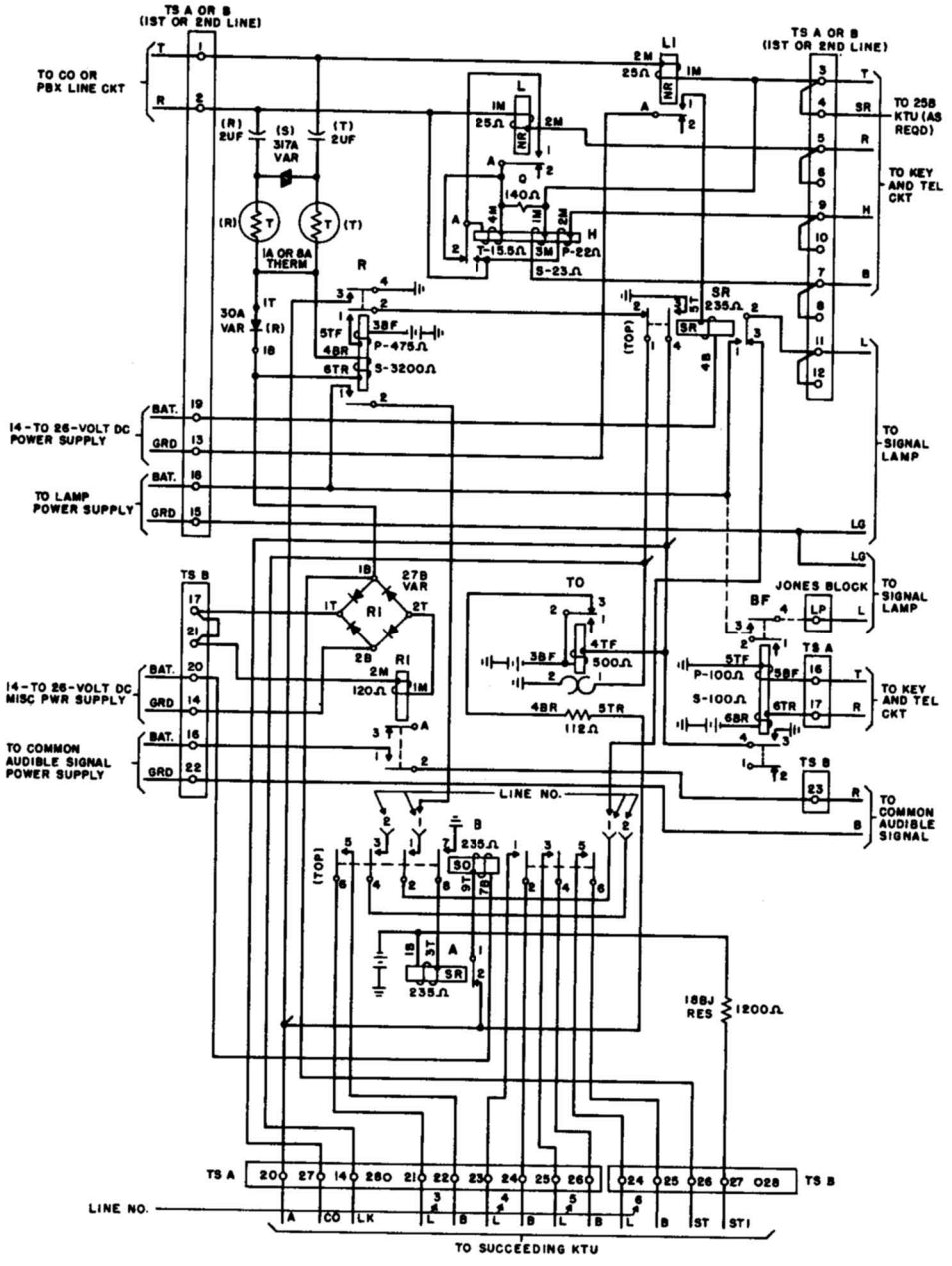

Fig. 2—51A Key Telephone Unit, Schematic

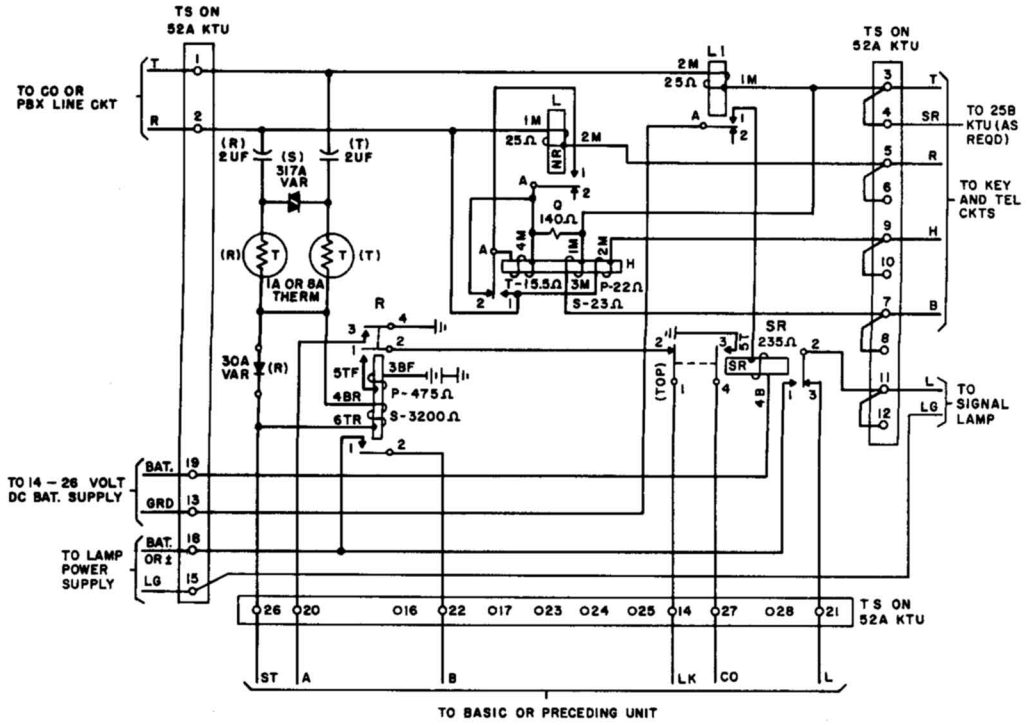

Fig. 3—52A Key Telephone Unit, Schematic

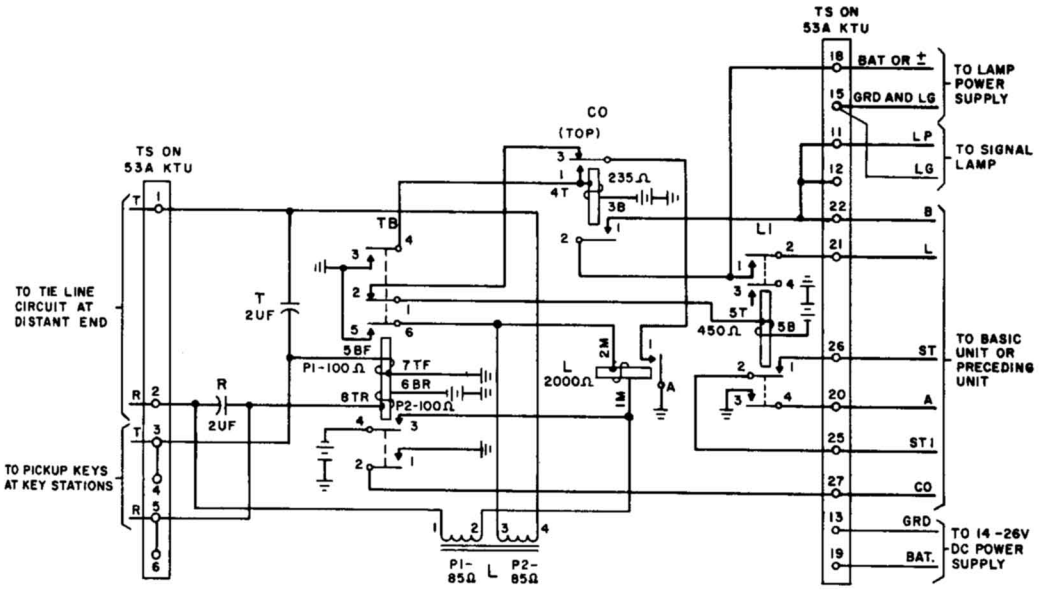

Fig. 4—53A Key Telephone Unit, Schematic

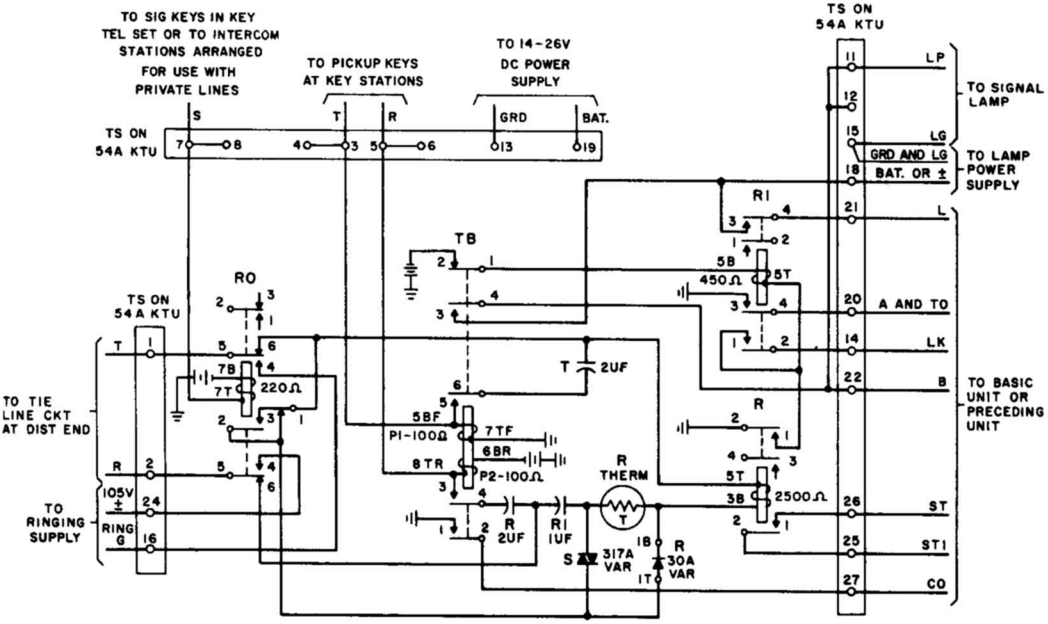

Fig. 5—54A Key Telephone Unit, Schematic

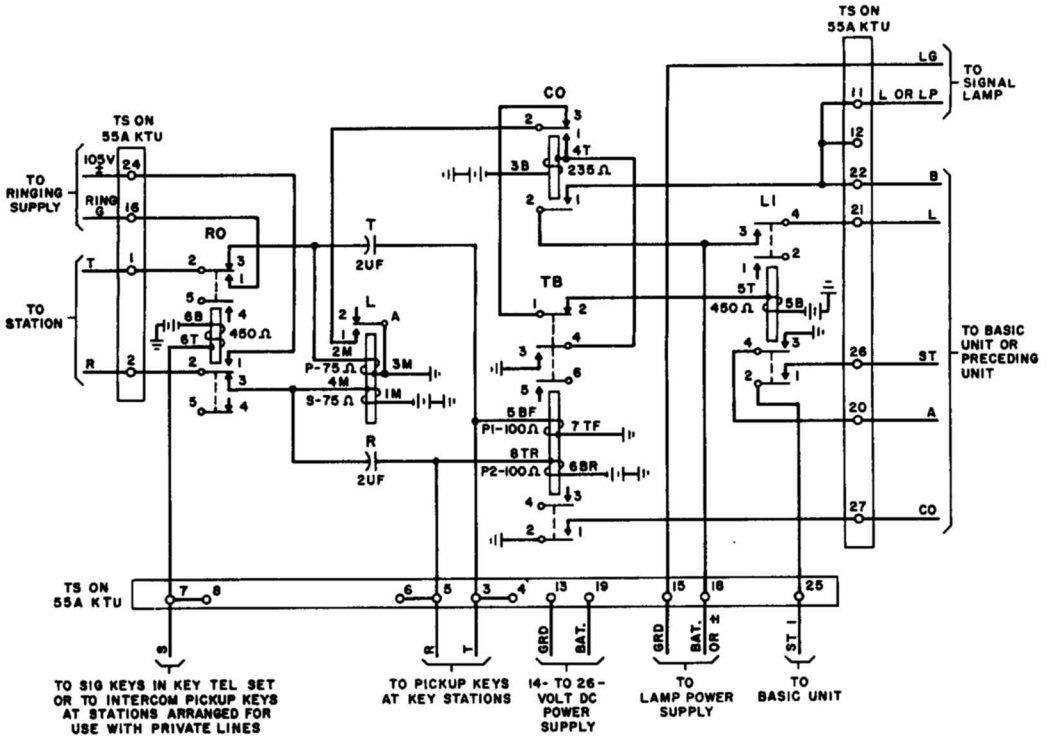

Fig. 6—55A Key Telephone Unit, Schematic

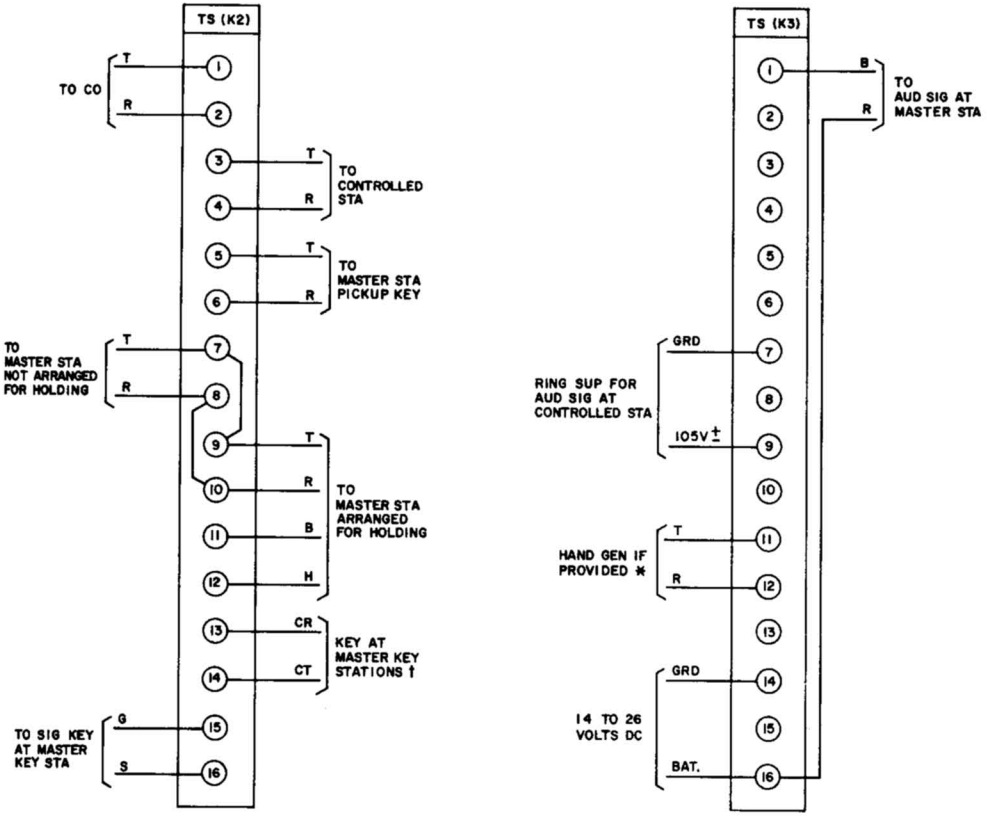

* IF HAND GENERATOR PROVIDED, OMIT RINGING SUPPLY ON (7) AND (9) OF K3 AND THE "S" AND "G" LEADS ON (15) AND (16) OF K2

† IN KEY TEL SETS CONNECT GN-W AND R-W CONDUCTORS TO CT TERMINAL. IN EXTERNAL KEYS STRAP CT AND LR TERMINALS, EXCEPT FOR THE 6040C AND 6041C KEY STRAP THE CT AND ONI.

Fig. 7—56A Key Telephone Unit, Connections

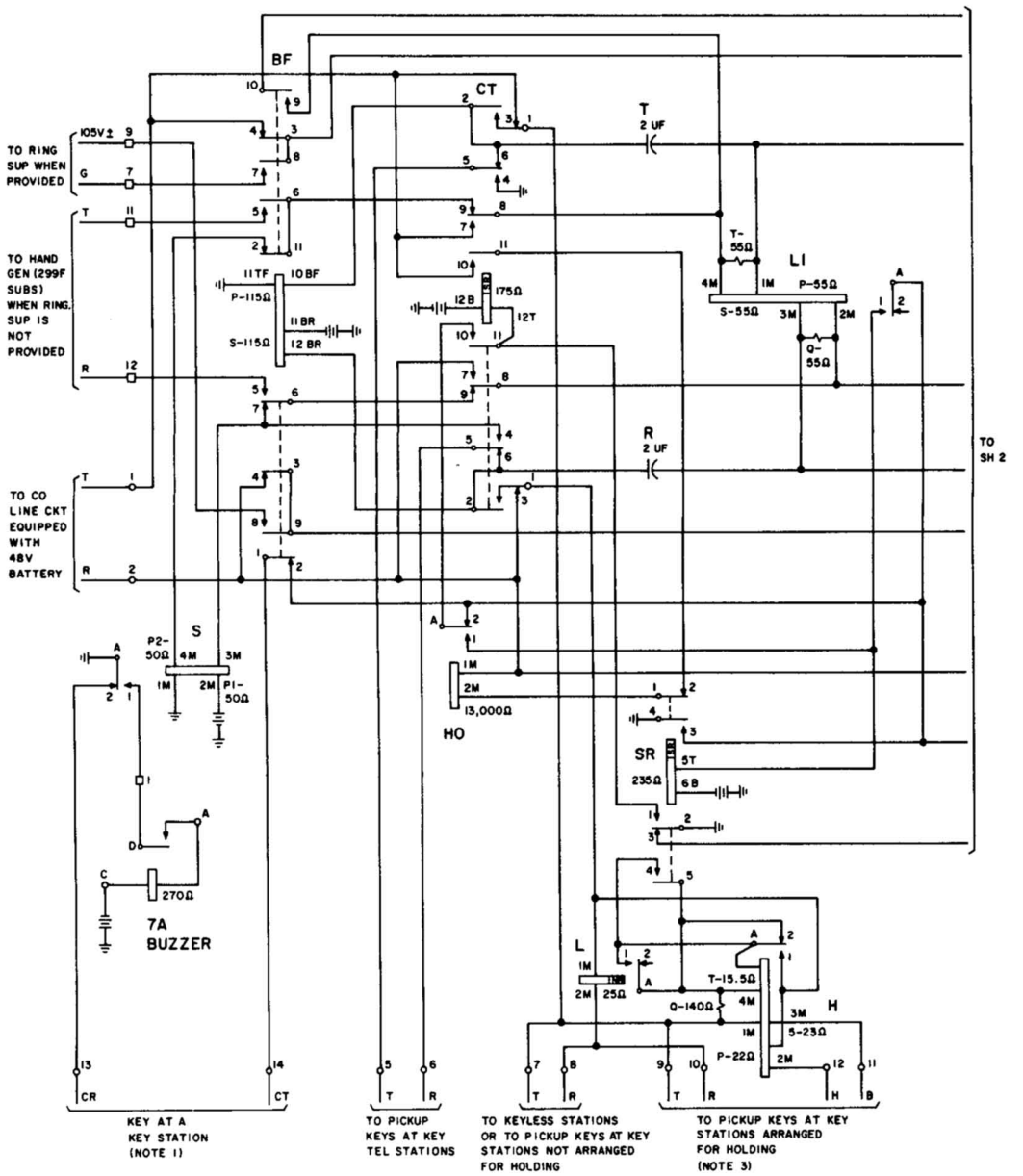

Fig. 8—56A Key Telephone Unit, Schematic (Sheet 1)

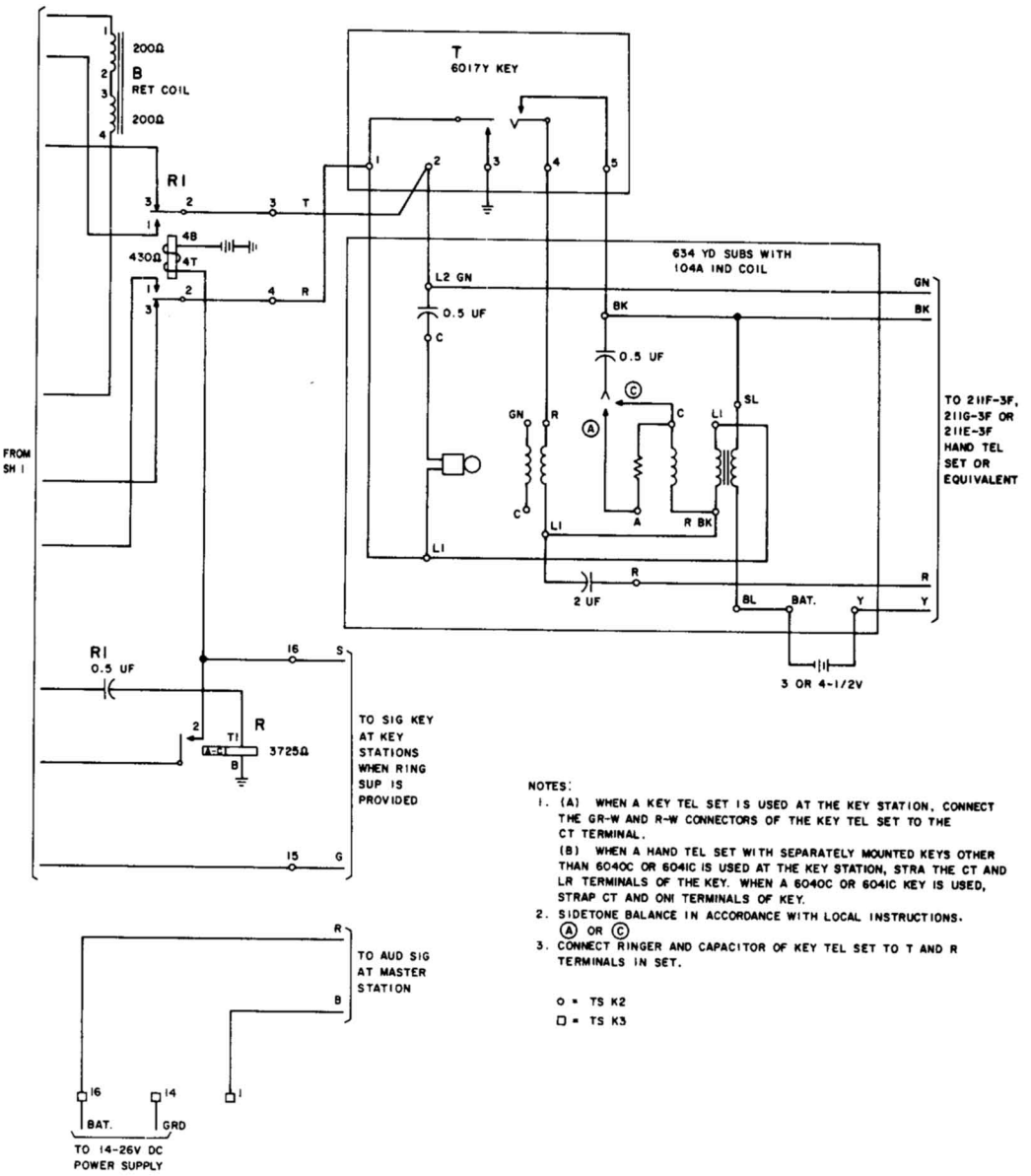

NOTES:

1. (A) WHEN A KEY TEL SET IS USED AT THE KEY STATION, CONNECT THE GR-W AND R-W CONNECTORS OF THE KEY TEL SET TO THE CT TERMINAL.
   (B) WHEN A HAND TEL SET WITH SEPARATELY MOUNTED KEYS OTHER THAN 6040C OR 6041C IS USED AT THE KEY STATION, STRA THE CT AND LR TERMINALS OF THE KEY. WHEN A 6040C OR 6041C KEY IS USED, STRAP CT AND ONI TERMINALS OF KEY.
2. SIDETONE BALANCE IN ACCORDANCE WITH LOCAL INSTRUCTIONS. Ⓐ OR Ⓒ
3. CONNECT RINGER AND CAPACITOR OF KEY TEL SET TO T AND R TERMINALS IN SET.

○ = TS K2
□ = TS K3

Fig. 8—56A Key Telephone Unit, Schematic (Sheet 2)

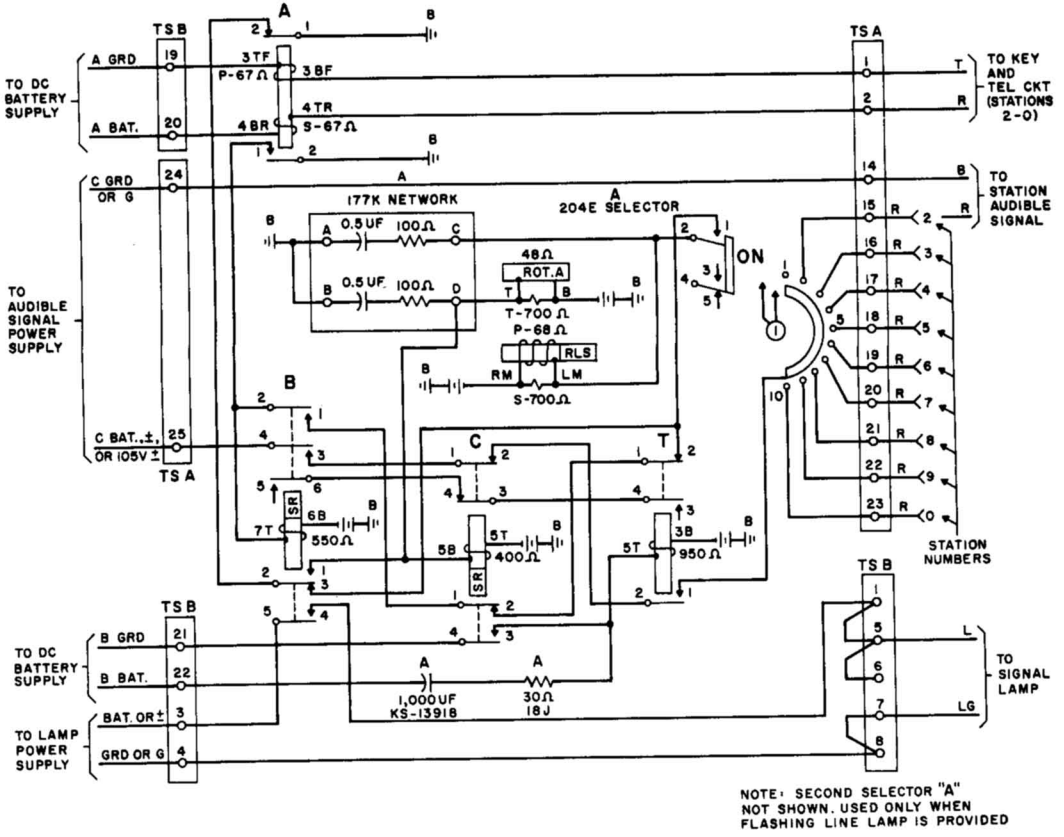

Fig. 9—57A Key Telephone Unit, Schematic

SERVICE

1A KEY TELEPHONE SYSTEM

TIE LINE AND CONTROL SERVICES

1. GENERAL

1.01 This section provides connection information for the various key telephone units that furnish tie line and control services for the 1A Key Telephone System. A schematic and connection figure is shown for each key telephone unit. Because of the many configurations of key telephone units possible, no attempt is made to show the various configurations; however, the key telephone units are grouped according to the services they provide.

1.02 This section is reissued to:

- Reinstate 17B KTU and show 17C KTU MD.
- Add 1C KTU which is MD.
- Revise Fig. 2, 8, 10, and 14.

Note: A small quantity of 1C and 17C KTUs have been manufactured. They may be used as direct replacements for 1B and 17B KTUs except that only two 17C KTUs may be used in a 105-type apparatus box.

1.03 This issue of the section is based on the following drawings:

SD-69091-01—Key Telephone System No. 1A, Line and Signaling Circuit

SD-69419-01—Key Telephone System No. 1A, Incoming CO or PBX Line Make Busy Lamp and Key Circuit

SD-69105-01—Key Telephone System No. 1A, Private Line Circuit

SD-69140-01—Key Telephone System No. 1A, Automatic Exclusion Circuit

If this section is to be used with equipment or apparatus reflecting later issues of the drawings, reference should be made to the SDs and CDs to determine the extent of the changes and the manner in which the section may be affected.

2. CONNECTION INDEX

Tie Line Service

Fig. 1—7A Key Telephone Unit, Private Line Circuit

Fig. 2—1A, 1B and 1C (MD) Key Telephone Units, Hold Circuit

Fig. 3—2A and 12B Key Telephone Units, Battery Feed Circuit

Fig. 4—5A Key Telephone Unit, Auxiliary Hold Circuit

Fig. 5—6B and 6C Key Telephone Units, Supervisory and Busy Lamp Circuit

Fig. 6—10A Key Telephone Unit, Automatic Exclusion Circuit

Fig. 7—14A Key Telephone Unit, Ringup Relay Circuit

Fig. 8—15D Key Telephone Unit, Ringup Relay Circuit (Dual Type)

Fig. 9—16A Key Telephone Unit, Common Audible Control and Lamp Relay Circuit

Fig. 10—17B and 17C (MD) Key Telephone Unit, Switching Relay and Lamp Control Circuit

Fig. 11—18D and 18E Key Telephone Units, Busy and Supervisory Relay Circuits

Fig. 12—19B Key Telephone Unit, Lamp Flashing Circuit

© American Telephone and Telegraph Company, 1973
Printed in U.S.A.

Fig. 13—20A Key Telephone Unit, Common Audible Control Circuit

Fig. 14—23A Key Telephone Unit, Noise Suppression Circuit

Fig. 15—25B (Automatic Cutoff Control Circuit) and 26B (Automatic Cutoff Circuit) Key Telephone Units Arranged for Automatic Cutoff of CO, PBX, or Private Line Circuits

Fig. 16—30A Key Telephone Unit, Time-Out Circuit

Fig. 17—31A Key Telephone Unit, Battery Feed Relay Circuit

Fig. 18—33A Key Telephone Unit, Lamp Wink Circuit

Fig. 19—34A Key Telephone Unit, Make Busy Lamp and Key Circuit

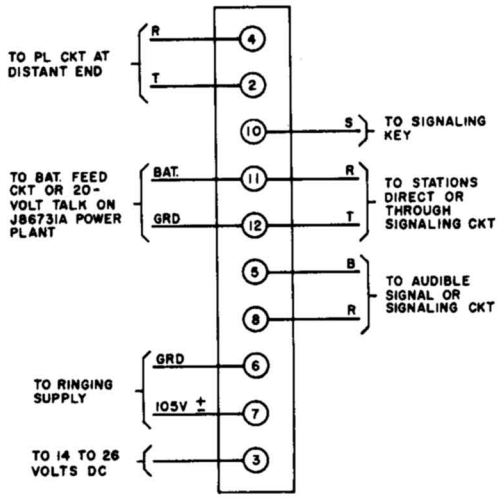

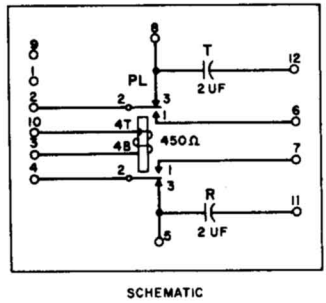

Fig. 1—7A Key Telephone Unit, Private Line Circuit

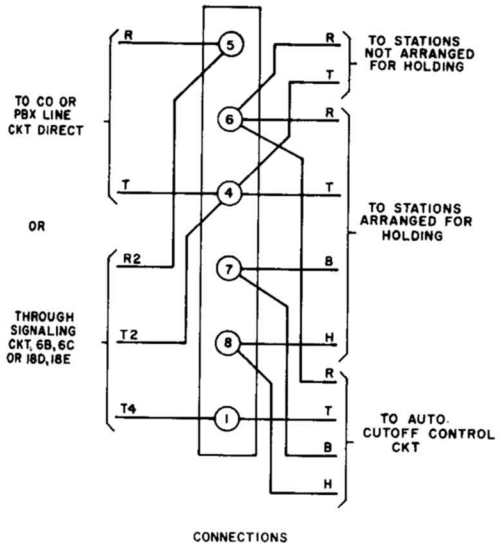

CONNECTIONS

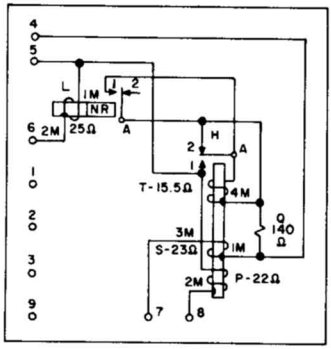

1A KTU-SCHEMATIC

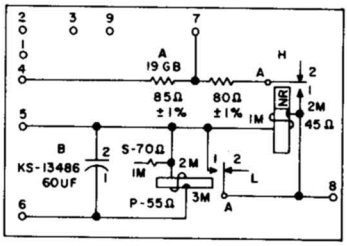

1B KTU-SCHEMATIC

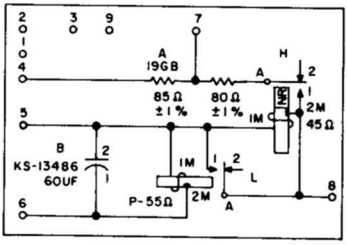

1C (MD) KTU-SCHEMATIC

Fig. 2—1A, 1B, and 1C (MD) Key Telephone Units, Hold Circuit

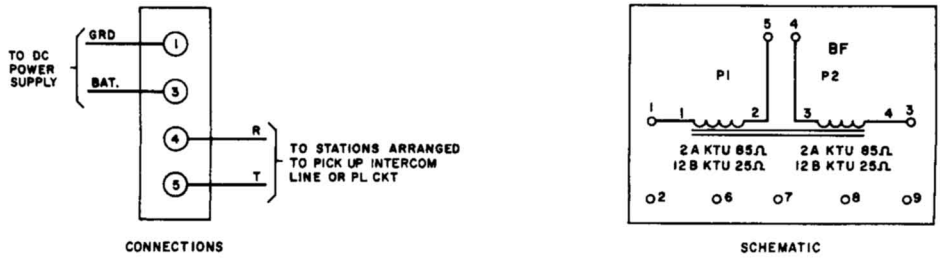

Fig. 3—2A and 12B Key Telephone Units, Battery Feed Circuit

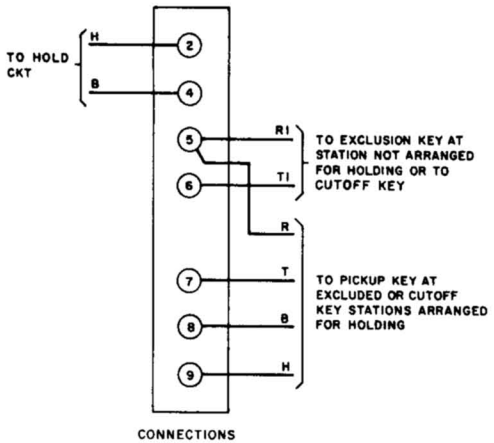

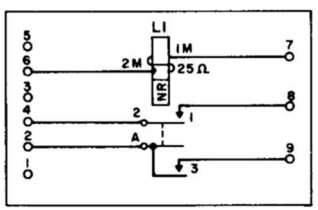

Fig. 4—5A Key Telephone Unit, Auxiliary Hold Circuit

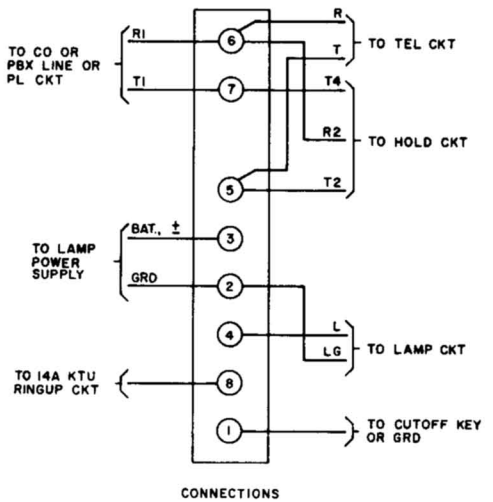

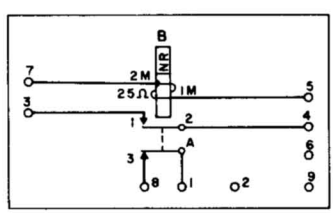

Fig. 5—6B and 6C Key Telephone Units, Supervisory and Busy Lamp Circuit

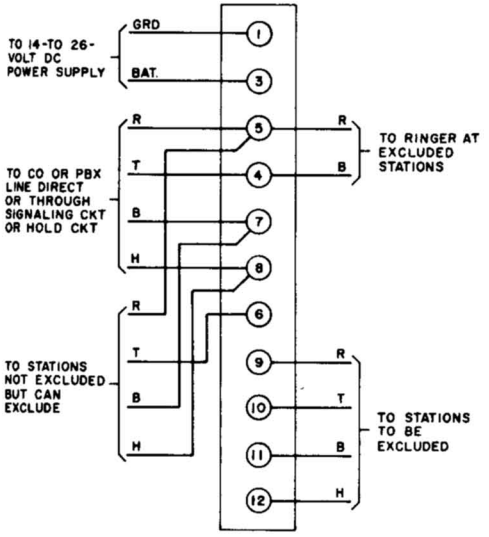

CONNECTIONS

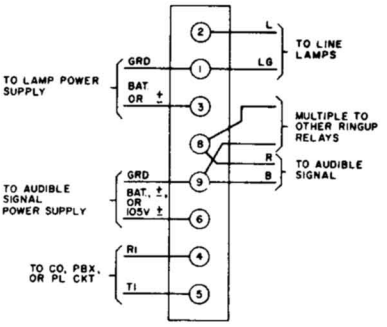

CONNECTIONS
FOR SEPARATE LINE LAMPS AND
COMMON AUDIBLE SIGNAL NONLOCKED-IN

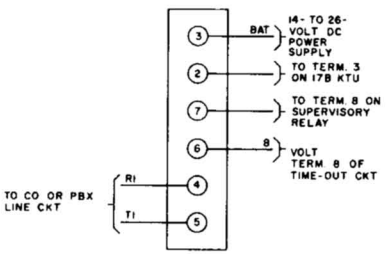

CONNECTIONS
FOR CONTROLLED LINE LAMPS AND
COMMON AUDIBLE SIGNAL LOCKED-IN

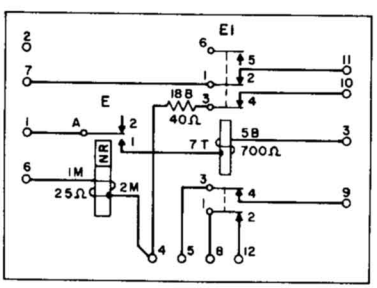

SCHEMATIC

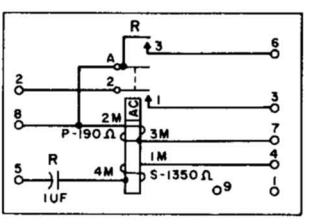

SCHEMATIC

Fig. 6—10A Key Telephone Unit, Automatic Exclusion Circuit

Fig. 7—14A Key Telephone Unit, Ringup Relay Circuit

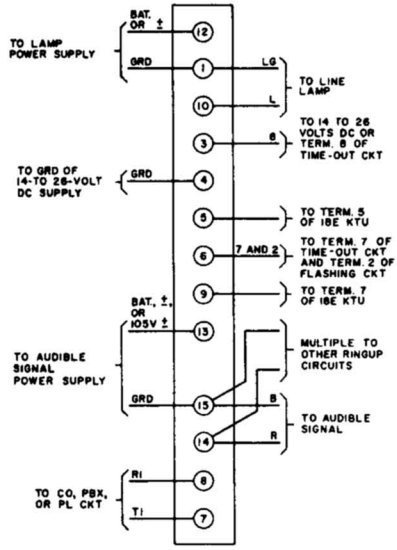

CONNECTIONS
FOR CONTROLLED LINE LAMPS AND
COMMON AUDIBLE SIGNAL LOCKED-IN

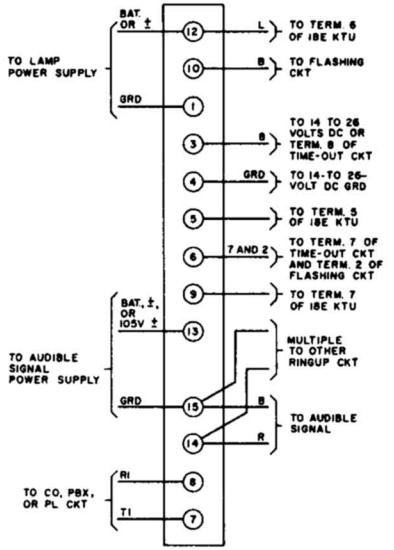

CONNECTIONS
FOR CONTROLLED COMBINED LINE AND
BUSY LAMPS AND COMMON AUDIBLE SIGNAL

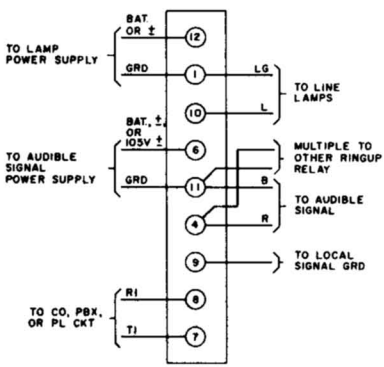

CONNECTIONS
FOR SEPARATE LINE LAMPS AND
COMMON AUDIBLE SIGNAL NONLOCKED-IN

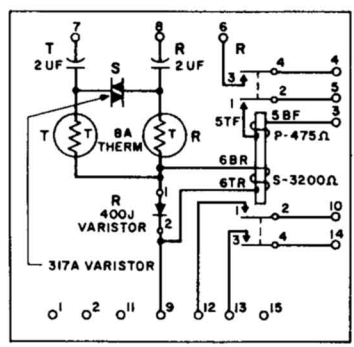

SCHEMATIC

Fig. 8—15D Key Telephone Unit, Ringup Relay Circuit (Dual Type)

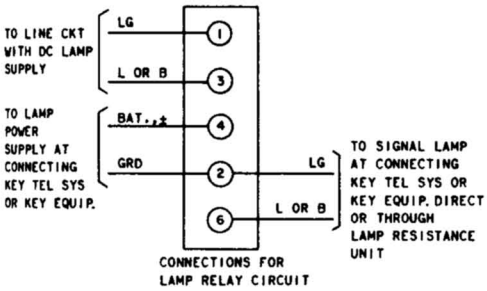

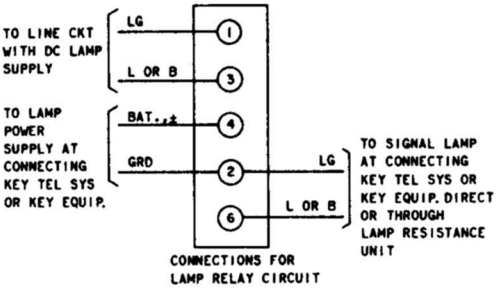

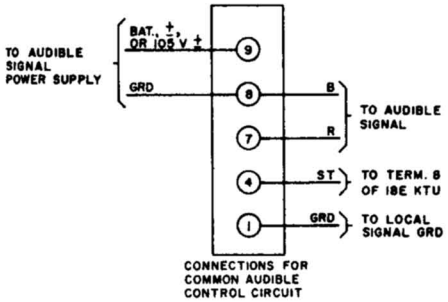

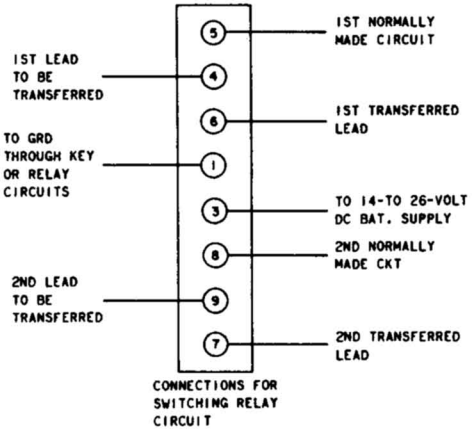

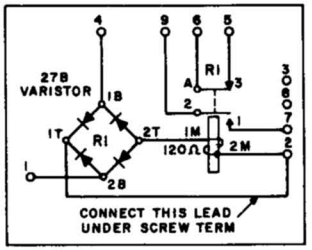

SCHEMATIC

SCHEMATIC

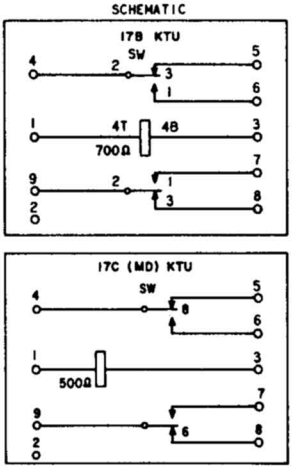

Fig. 9—16A Key Telephone Unit, Common Audible Control and Lamp Relay Circuit

◊Fig. 10—17B and 17C (MD) Key Telephone Units, Switching Relay and Lamp Control Circuit◊

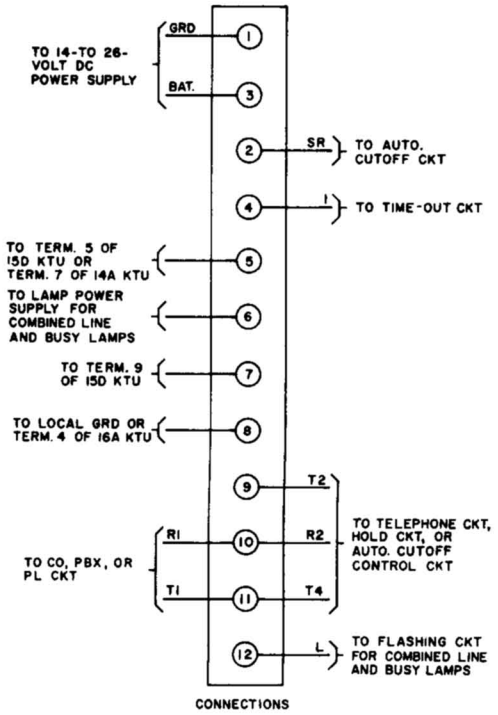

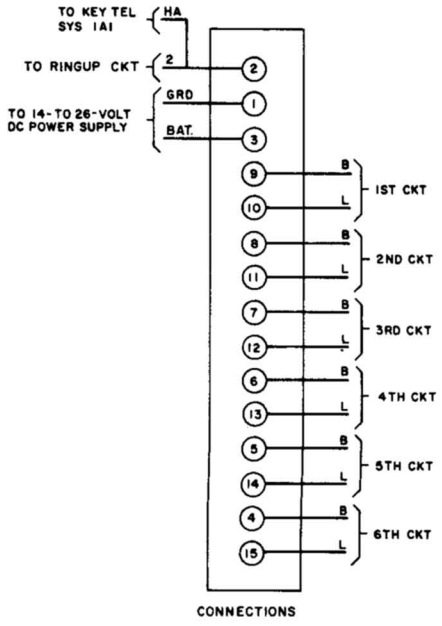

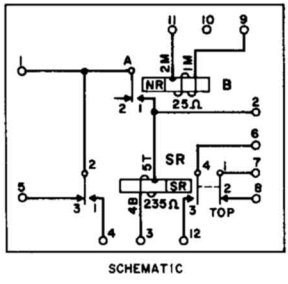

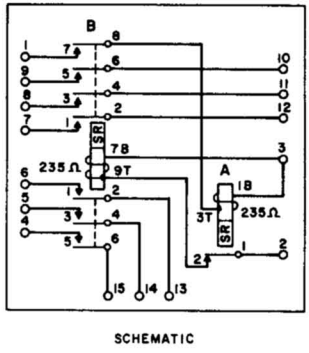

Fig. 11—18D and 18E Key Telephone Units, Busy and Supervisory Relay Circuits

Fig. 12—19B Key Telephone Unit, Lamp Flashing Circuit

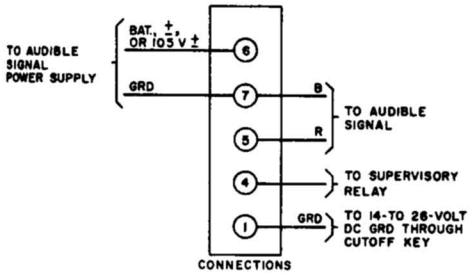

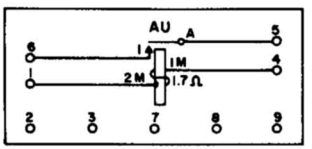

Fig. 13—20A Key Telephone Unit, Common Audible Control Circuit

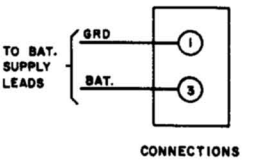

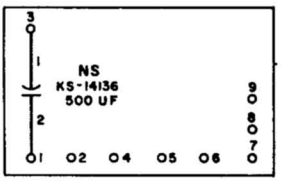

◆ Fig. 14—23A Key Telephone Unit, Noise Suppression Circuit ◆

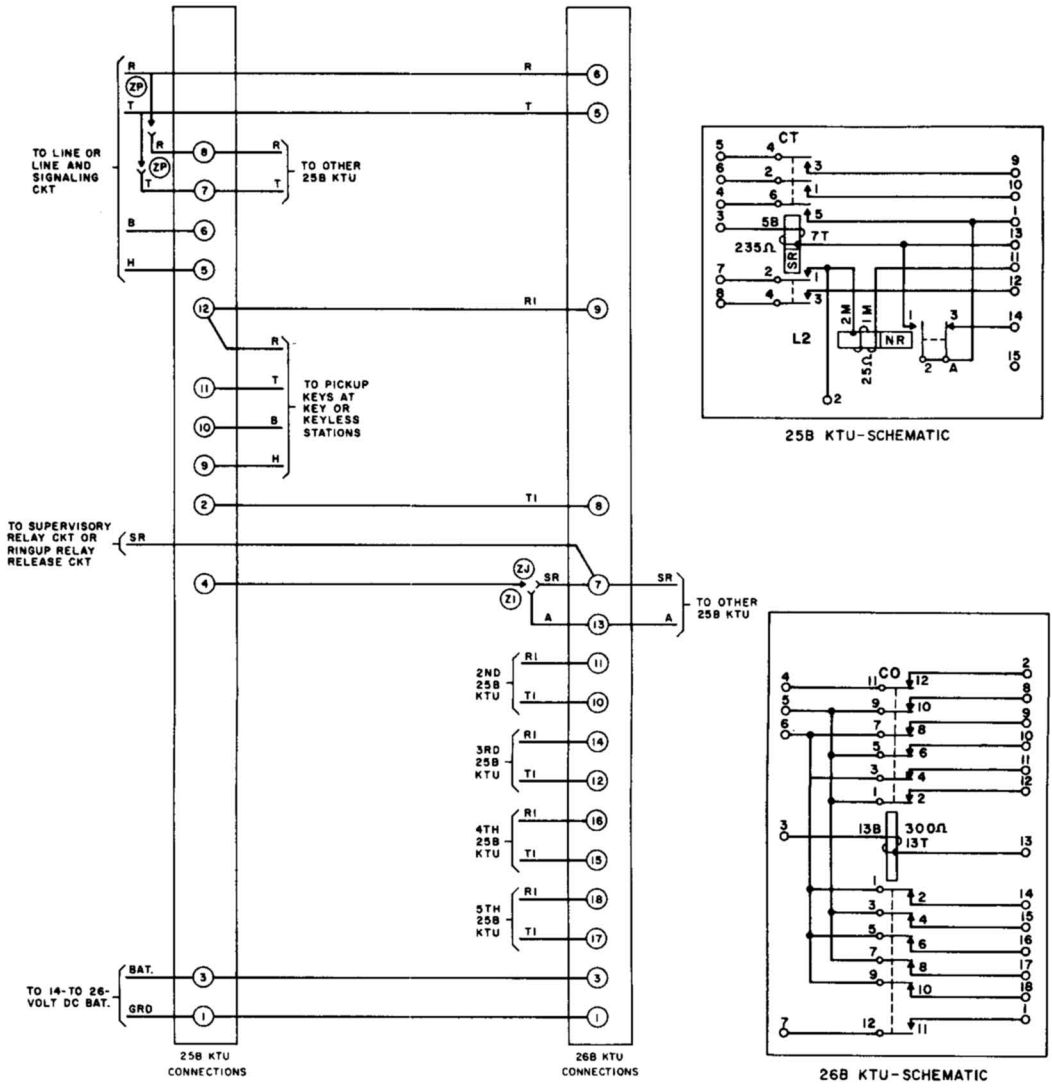

25B KTU-SCHEMATIC

26B KTU-SCHEMATIC

NOTES:

1. ZP AND Z1 WIRING FOR STATIONS WHICH CAN CUT OFF OTHER STATIONS.
2. ZP AND ZJ WIRING FOR STATIONS WHICH CANNOT CUT OFF OTHER STATIONS, BUT CAN BE CUT OFF EXCEPT WHEN ON THE LINE.
3. ZJ WIRING FOR STATIONS WHICH CANNOT CUT OFF OTHER STATIONS, BUT CAN BE CUT OFF AT ANY TIME.

Fig. 15—25B (Automatic Cutoff Control Circuit) and 26B (Automatic Cutoff Circuit) Key Telephone Units Arranged for Automatic Cutoff of CO, PBX or Private Line Circuits

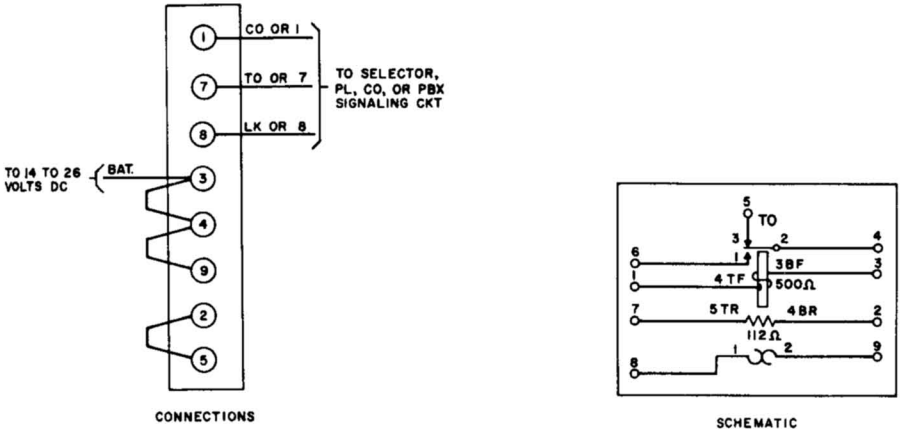

Fig. 16—30A Key Telephone Unit, Time-Out Circuit

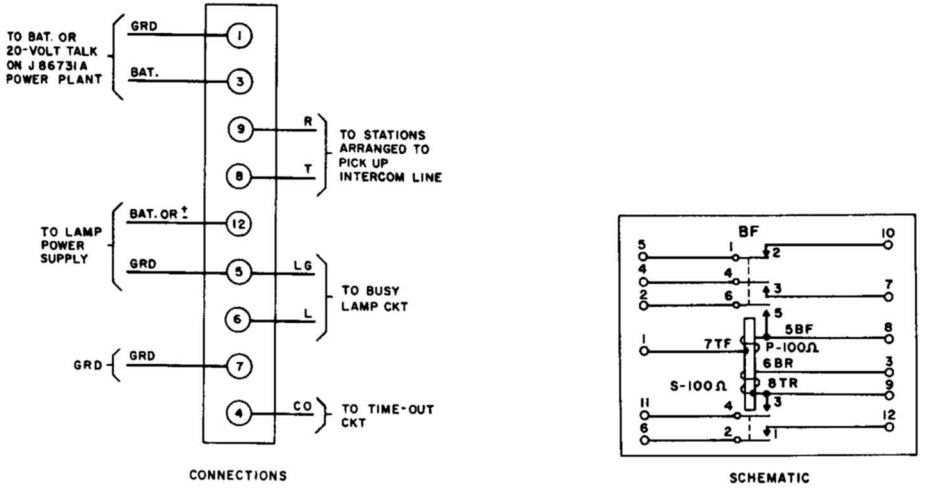

Fig. 17—31A Key Telephone Unit, Battery Feed Relay Circuit

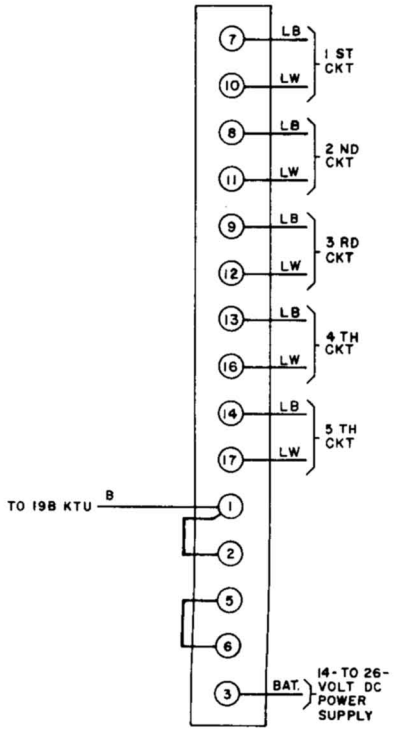

CONNECTIONS

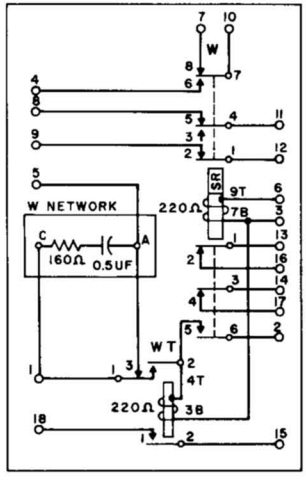

SCHEMATIC

Fig. 18—33A Key Telephone Unit, Lamp Wink Circuit

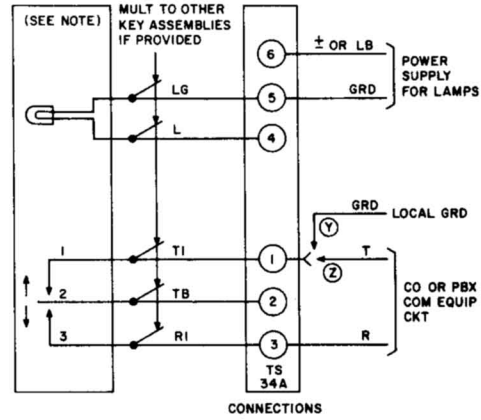

CONNECTIONS

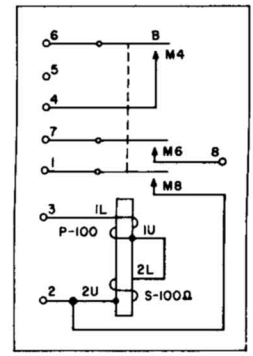

SCHEMATIC

NOTE:
A KEY ASSEMBLY IS REQUIRED AT EACH STATION ORIGINATING THIS CIRCUIT. KEY ASSEMBLIES CONTROLLING THE SAME LINE OR GROUP OF LINES MAY BE MULTIPLED. KEY ASSEMBLIES MUST BE ASSEMBLED IN THE FIELD. ORDERING INFORMATION IS AS FOLLOWS:

- CAP, LAMP, 2S (GREEN)
- KEY, 552M (NONLOCKING)
- MOUNTING, JACK, 255A
- SOCKET, LAMP, 47B

Fig. 19—34A Key Telephone Unit, Make Busy Lamp and Key Circuit

SERVICE

1A KEY TELEPHONE SYSTEM

INTERCOM SERVICES

1. GENERAL

1.01 This section provides connection information for the signaling and cut-through key telephone units used in intercom service arrangements for the 1A Key Telephone System. A schematic and connection figure is shown for each key telephone unit.

1.02 Information in this section was formerly contained in Sections 518-112-404, 518-112-409 and 518-112-416 which are hereby canceled.

1.03 For additional connection information, refer to the following:

- SD-69199-01—Key Telephone System No. 1A, Intercommunicating Line Circuit
- SD-69091—Key Telephone System No. 1A, Line and Signaling Circuit
- 518 Division, Section entitled "Service-1A 50-Type Packaged Units"
- 518 Division, Section entitled "Service-1A Tie Line and Control Services"

2. CONNECTION INDEX

Fig. 1—3A Key Telephone Unit, Intercommunicating Signaling Circuit

Fig. 2—13C Key Telephone Unit, Automatic Signaling Intercommunicating Circuit

Fig. 3—29A Key Telephone Unit (Cut-Through Relay Circuit) with 6C, 25B, and 26B KTUs Arranged for Automatic Cutoff and/or Flashing Line Lamps for Intercom Line with Dial Selection of Stations.

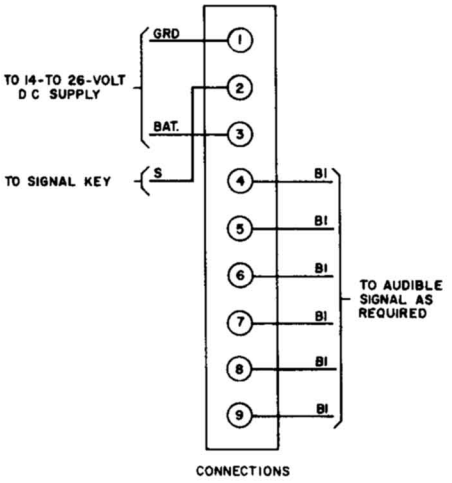

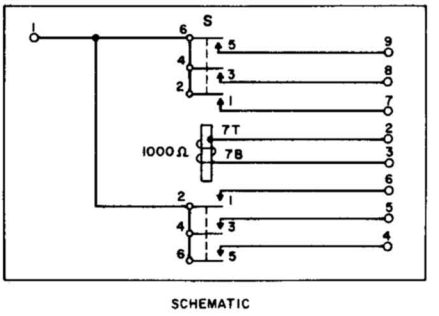

Fig. 1—3A Key Telephone Unit, Intercommunicating Signaling Circuit

© American Telephone and Telegraph Company, 1970
Printed in U.S.A.

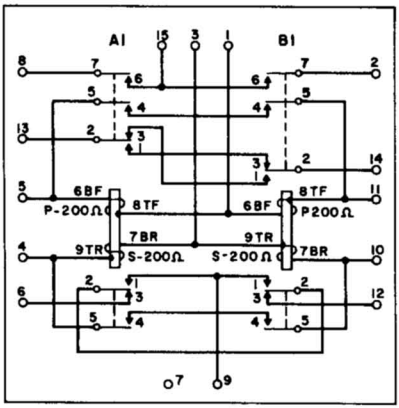

SCHEMATIC

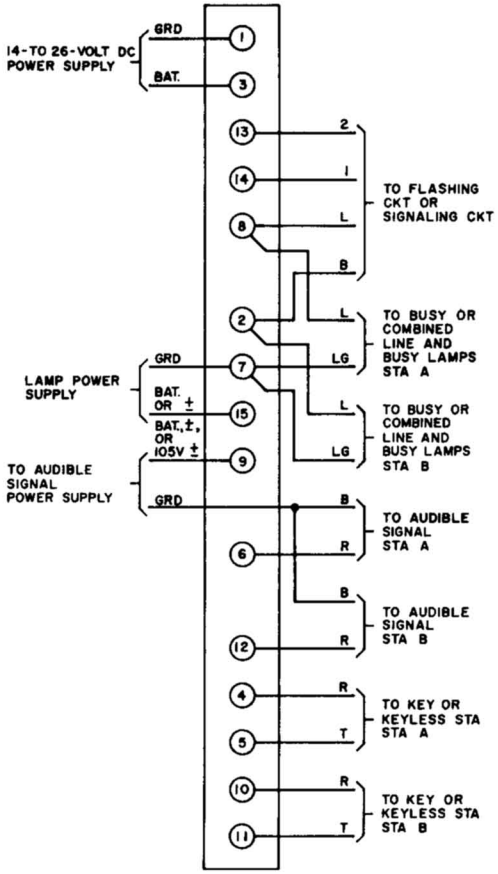

CONNECTIONS

Fig. 2—13C Key Telephone Unit, Automatic Signaling Intercommunicating Circuit

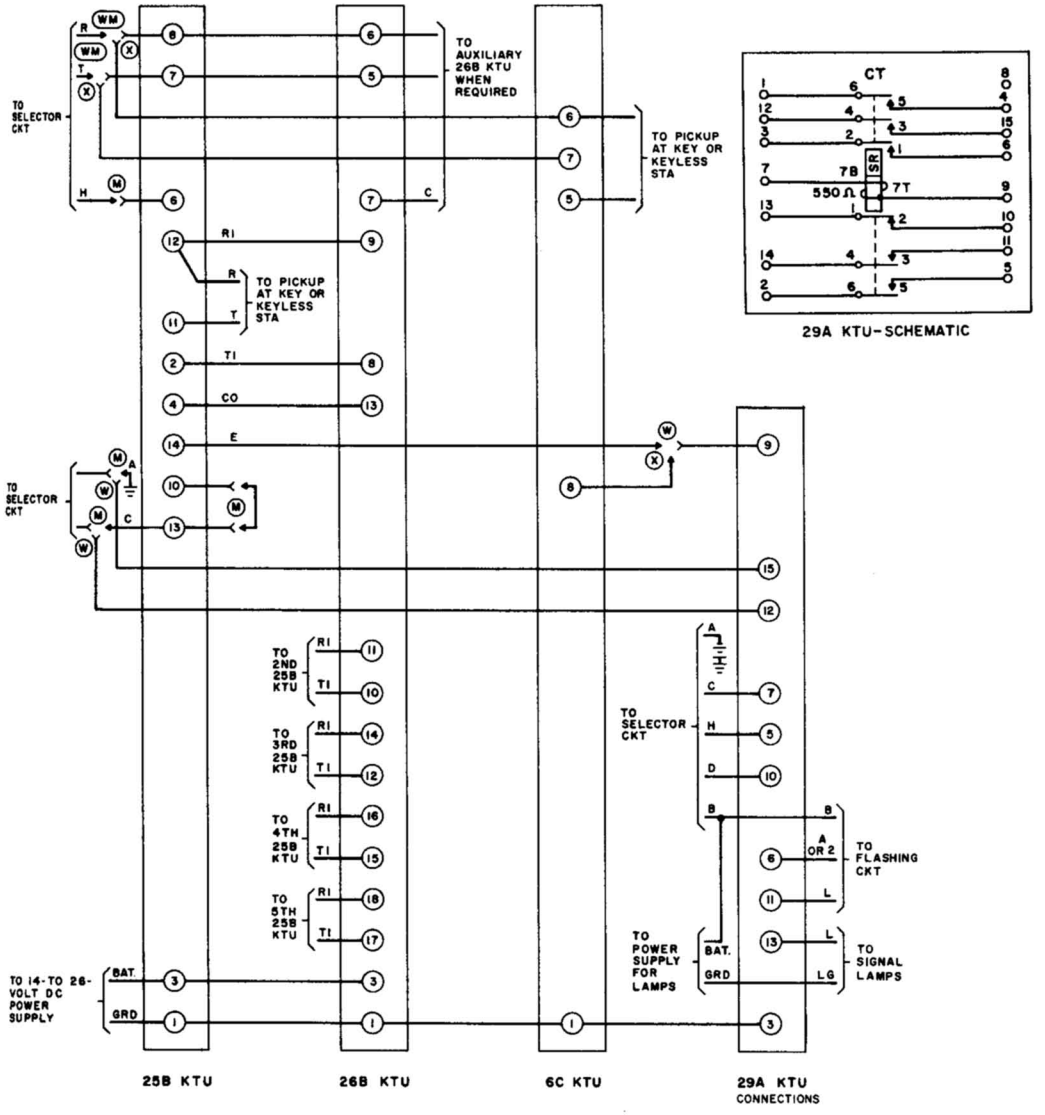

M WIRING AUTOMATIC CUTOFF WITHOUT FLASHING LINE LAMPS PROVIDES ONE 25B KTU PER STATION AND 26B KTU PER FIVE STATIONS.

X WIRING FLASHING LINE LAMPS WITHOUT AUTOMATIC CUTOFF PROVIDE ONE 6C AND ONE 29A KTU PER STATION.

W WIRING AUTOMATIC CUTOFF WITH FLASHING LINE LAMPS PROVIDES ONE 25B KTU PER STATION AND ONE 26B KTU PER LINE PER FIVE STATIONS AND ONE 29A KTU PER STATION.

Fig. 3—29A Key Telephone Unit (Cut Through Relay Circuit) with 6C, 25B and 26B Key Telephone Units Arranged for Automatic Cutoff and/or Flashing Line lamps for Intercom LIne with Dial Selection of Stations

REFERENCE

1A1 KEY TELEPHONE SYSTEM

IDENTIFICATION AND ARRANGEMENTS

1. GENERAL

1.01 This section covers identification of various components of the 1A1 Key Telephone System (KTS) and provides service feature arrangements in the form of block diagrams. Refer to Section 518-114-425 entitled Service, 1A1 Key Telephone Units, for connections for arrangements covered in this section.

1.02 This section is reissued to add information on the 1A2 KTS features and station features adaptable for use with the 1A1 KTS.

2. IDENTIFICATION

2.01 The main components of a 1A1 KTS are key telephone sets and/or nonkey telephone sets (with separately mounted keys) used in conjunction with the appropriate key telephone units. The complete system also includes power supplies, cabling, distribution terminals, adapters, fasteners, and mounting facilities such as apparatus mountings or equipment cabinets.

2.02 The 1A1 KTS provides the following station switching service features:

- Holding on central office or PBX lines
- Visual and audible line signals
- Intercom
- Conferencing on two PBX lines
- Cutoff, exclusion, and selective privacy
- Private lines.

2.03 The 1A1 system line circuit requires an *A* lead between station and line equipment for control. A station ground (A1 lead) must be furnished per station to control the line circuit *A* relay (via *A* lead) through the station switchhook and pickup key contacts. Local power must be furnished since there are no supervisory relays connected in series with the central office or PBX line to control a hold condition.

2.04 Incoming signals are indicated audibly and/or visually. They may be steady or intermittent in operation. When a call is answered, relay operation silences the audible signal and changes the flashing line lamp, if provided, to a steady busy lamp. A common time-out feature is provided which releases locked-in relays and extinguishes incoming signal indication if the call is not answered within approximately 30 seconds and if no other line in the system is busy. The overall time-out interval varies from an extremely short (or no) interval up to 30 seconds, depending on whether the thermal control element has had sufficient time to cool following its last operation.

2.05 Key telephone units are individual circuit packages which provide switching and control functions and are arranged for panel mounting in standard equipment cabinets or apparatus mountings (Fig. 1 and 2).

2.06 Table A lists the 1A1-type KTUs and the features they provide. ▶Table B lists the adaptable 1A2 KTU features and station features for use with the 1A1 KTS.◀

1A1 KTS OPERATING FEATURES

A. Hold

2.07 Permits holding of a central office or PBX line while using another line at the station. Hold circuit characteristics are explained as follows: Depressing the hold key opens the line circuit *A*

NOTICE
Not for use or disclosure outside the
Bell System except under written agreement

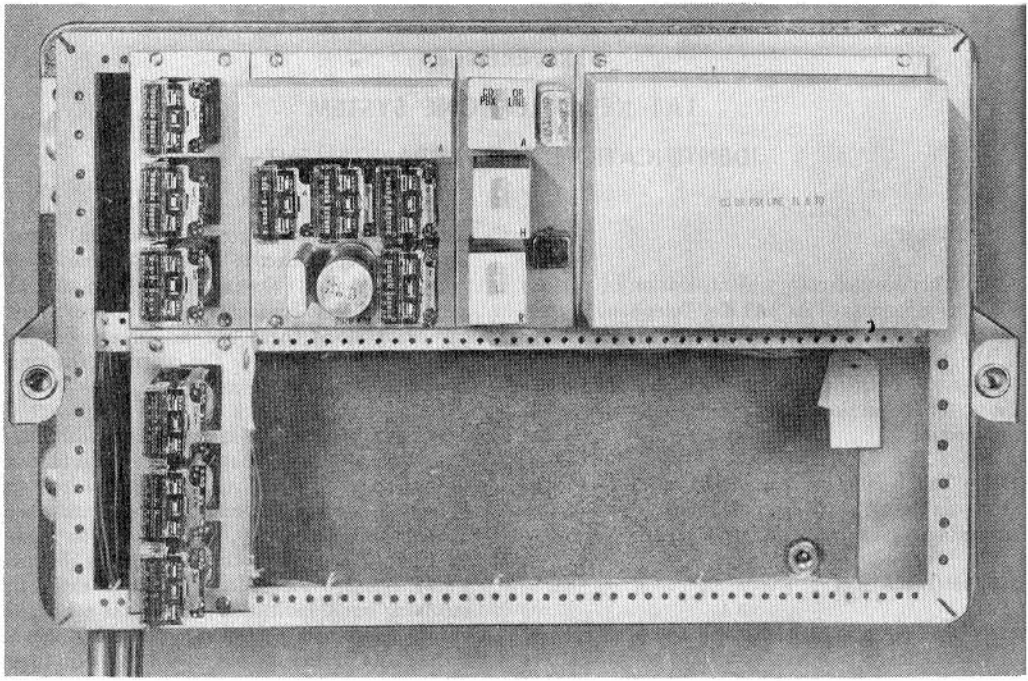

Fig. 1—1A1-Type Key Telephone Unit Mounted in a 16A Apparatus Mounting

lead causing *A* relay to release. H relay operates on the momentary station short, then holds on line current.

B. Audible and Visual Signals

Audible Signals

2.08 The ringer may be connected to an individual line or wired as a common ringer for a group of lines. A bell or buzzer may be used as the audible signal for one or more groups of stations.

2.09 Use of a 1A1 diode matrix block can provide flexibility in associating several key telephone system lines with one or more common audible signals. Matrix units consist of two electrical groupings—lines and ringers. Small clip-type mounting terminals are furnished in multiple combinations on the face of the unit. Pigtailed diodes (446F) are hand-inserted by the installer at appropriate electrical crosspoints to associate any line(s) with any ringer(s) connected through the unit. See Section 461-620-100 entitled Matrix Block—1A1, Identification, Installation, Wiring, and Maintenance.

Visual Signals

2.10 Visual signals are furnished as illuminated buttons in multiline telephone sets and separately mounted keys or in separate lamp indicators as follows:

- Flashing lamp, locked-in or nonlocked-in line lamp, signifying an incoming call
- Steady lamp indicating line busy or, in some cases, hold
- Winking signal-line on hold.

C. Make-Busy and Key Circuit

2.11 This arrangement is not usually considered to be fundamental to key telephone system service. It provides a means for busying out a CO or PBX line (or a group of lines) to incoming

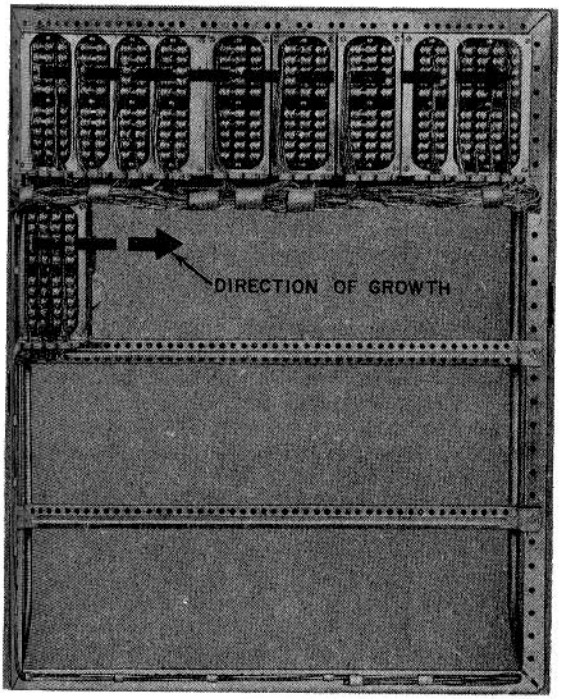

Fig. 2—Rear View of 1A1-Type Key Telephone Unit Mounted in a 26A Apparatus Mounting

off-hour traffic. Outgoing traffic is not affected. It connects to central office or PBX circuits which provide the make-busy feature. A separate control pair is required for each line or group of lines to be made busy.

D. Intercom

Manual Intercom

2.12 This intercom feature enables two or more stations to be connected to a common talking line, usually on the same premises. A person may communicate with other persons at one or more stations connected in the system without the use of a central office or PBX line.

2.13 The intercom line may be provided with a line and busy lamp and associated key telephone units. In addition to controlling these signals, it may also control the time-out feature.

2.14 Pushbutton and buzzer signaling devices are generally associated with the talking line among stations. The signaling buttons may be part of the key telephone set or may be externally mounted 1-, 4-, 8-, or 12-key button assemblies, or combinations of these keys. The buzzer may be mounted either externally or within the set.

Automatic Intercom

2.15 This intercom circuit is arranged to signal automatically from one station to the other by going off-hook and to signal manually in the other direction. This is referred to as a ***1-way automatic intercom line.*** When the same type line is arranged to signal automatically from either end, it is referred to as a ***2-way automatic intercom line.***

E. Conferencing

2.16 Two PBX lines may be bridged for conferencing purposes under control of an exclusion key or nonlocking key at a key station. This can be accomplished without returning the handset on-hook and without the assistance of an operator. When the station is equipped with a speakerphone feature, a nonlocking key arrangement should be used to control the bridging circuit.

F. Cutoff and Exclusion

Manual Cutoff and Exclusion

2.17 The cutoff and exclusion features are similar and differ only in the manner in which they are provided. Both of these features are controlled by the operation of a mechanical device as follows:

(a) ***Cutoff:*** The turnbutton key must be operated manually to disconnect or to reconnect various arrangements such as an extension ringer.

(b) ***Exclusion:*** The exclusion key is part of the switchhook assembly; it is operated manually by pulling the plunger up, and restored automatically when the handset is replaced on-hook. This circuit excludes extensions or other stations having access to the same line.

Automatic Cutoff and Exclusion

2.18 The circuit functions of automatic cutoff and exclusion are based on the station supervisory relay operation.

(a) ***Cutoff:*** Optional arrangements can be provided to cut off stations from the line as follows:

(1) Station can cut off others but cannot be cut off.

(2) Station can cut off others and can be cut off, except during a call.

(3) Station or groups of stations cannot cut off others but can be cut off, except during a call.

(4) Station or groups of stations cannot cut off others but can be cut off at any time.

(b) ***Exclusion:*** A main station may be arranged to exclude automatically one or more secondary stations regardless of whether or not the stations are in use.

G. Private Lines

2.19 A private line is a metallic circuit between two stations which may or may not be on the same premises. It is used when two customers desire direct communication with each other without the need for routing the call through a central office or PBX switch train. The kind of private line service provided is determined by the type of terminating equipment used.

2.20 A private line, arranged so that either end can be manually signaled by the other, is referred to as a ***ringdown private line.***

2.21 A private line, arranged for signaling automatically from either end when the handset is lifted, is referred to as an ***automatic tie line.***

2.22 A private line, arranged for signaling in one direction automatically and in the other manually, is referred to as a ***station line circuit.*** This circuit differs from the ringdown private line in that the station end requires no line circuit or other additional equipment.

▶1A2 KTS FEATURES AND STATION FEATURES

A. Music-On-Hold

2.23 This feature transmits music from a customer-provided music source to calling parties on CO or PBX lines that are placed on hold.

B. Audible Signal Suppression

2.24 This feature provides a circuit arrangement to suppress audible alerting signals on a line or lines associated with a multibutton telephone set when that station is in an off-hook condition.

C. Power Failure Transfer

2.25 When local commercial power supplying the KTS fails, local ringing on CO lines cannot continue. The power failure transfer feature automatically transfers the CO ringing current to selected station ringers. This allows calls to be answered on a limited basis during commercial power failures.

D. Battery Reversal Toll Restriction

2.26 This feature disallows toll calls from restricted stations but allows toll calls from unrestricted stations. This feature can only be used with CO circuits that provide a polarity reversal on the tip and ring of the line on toll calls.

E. Rotary Dial Toll Restriction

2.27 This feature provides toll restriction on rotary dial lines where CO toll diversion is not available. This rotary dial restriction circuit may be optionally provided with piggyback circuit modules to provide digit absorption or to allow restricted stations to call foreign number plan areas. It may be used for either loop-start or ground-start operation, with ground-start providing the most security against nonallowed calls being placed.

F. Message Waiting (MW) and/or Station Busy (SB) Consoles

2.28 The 6B1 selector console is an 18-station MW console with SB lamps incorporated in the MW buttons.

2.29 The 7B1 selector console is a 34-station MW console with SB lamps incorporated in the MW buttons.

G. Hands-Free Answering on Intercom (HFAI)

2.30 Each station to be equipped with HFAI must have a 2A transmitter-receiver installed as an adjunct to its regular intercom service. This allows the station to be signaled by a 1/2-second tone burst through the speaker in its adjunct, turns on a mike-on LED (light emitting diode), and allows called party to answer without depressing any buttons. Called party has the option of using the DO NOT DISTURB (DND) button or MIKE-OFF button and the overriding adjunct operation by pushing INTERCOM button on key set and going off-hook; this cancels HFAI feature.

H. Voice Signaling on Manual Intercom

2.31 This feature replaces buzzer with 107B loudspeaker where voice signaling on manual intercom is preferred.◀

3. ARRANGEMENTS

3.01 A 1A1 KTS can provide all or some of the operating features listed in Part 2.

3.02 The type and size of a key telephone system arrangement is dependent upon the following:

- Immediate needs of the customer
- Future requirements of the customer
- Number and type of key telephone units required to provide the desired features
- Adequate mounting facility for the key telephone units
- Available space for mounting the associated apparatus (cabinets, relay racks, power plants, etc).

Note: All of these factors must be taken into consideration in order to provide for the orderly growth of any arrangement.

3.03 Where feasible, consideration should be given to centralizing the arrangements. A system should be arranged to permit maximum flexibility.

3.04 Various system arrangements are shown as block diagrams in Fig. 3 through 13. These block diagrams depict the key telephone units required to provide the services listed for that particular arrangement. Refer to Table A for the quantity of key telephone units required.

3.05 Refer to Section 518-114-425 for connection information for the arrangements shown in Fig. 3 through 13.

TABLE A

PANEL MOUNTED KTUS — PRINCIPALLY USED FOR 1A1 KEY TELEPHONE SYSTEMS

ORDERING GUIDE KTU	FEATURE OR OPTION		QUANTITY	PANEL WIDTH	
				INCHES	7/16-INCH CENTERS
201C	Fuse-mounting unit and bridging terminal		1 per 7 fuses	2-5/32	5
202A* 202B*	Central office or PBX line circuit (grounded ringing)		1 per line	3-1/32	7
202C* 202D	Central office or PBX line circuit (Metallic or grounded ringing)		1 per line	2-19/32	6
203A	Tie line circuit	Automatic	2 per line (1 at originating end, 1 at terminating end)	3-15/32	8
204A		Ringdown		3-29/32	9
205A	Station line circuit		1 per line	3-29/32	9
207A*	Dial-selective intercom circuit		1 per 6A selector only system	5-21/32	13
207B*				5-7/32	12
207C					
208A†	Flashing signal, intercom, and automatic cutoff control circuit		1 per 3 dial-selective intercom station	3-15/32	8
209A*	Flashing intercom signal, time-out	Without wink	1 per 6 lines	4-25/32	11
		With wink	1 per 5 lines		
210A†	Wink circuit		1 per 5 lines	2-19/32	6
211A†	Manual intercom, ringing lamp, noise suppression, interrupter audible signal circuit		1 per group of common aud sig	3-1/32	7
212A*	Three central office or PBX lines and common equipment for up to 6 lines (grounded ringing)		As required	9-5/32	21
213B	Joint-use line circuit with holding		1 per line	4-25/32	9
227B	Visual and audible signal control circuit		As required	3-1/32	7
228A	Blank 40-terminal apparatus unit for bridging or miscellaneous purposes		As required	3-15/32	8
229B	Auxiliary relay circuit		As required	3-1/32	7
230A* 230B	Four central office or PBX line circuits (metallic or grounded ringing)		1 per 4 lines	8-9/32	19
232A* 232B* 232C	Time-out and manual intercom circuit. When equipped with a KS-15900, L1 electromechanical interrupter, the unit provides flashing, wink, ringing, and busy-tone signal interruptions.		1 per system	3-15/32	8

TABLE A (Contd)

ORDERING GUIDE KTU	FEATURES OR OPTIONS	PANEL WIDTH	QUANTITY	
			INCHES	CENTERS 7/16-INCH
233A*	Ten central office or PBX line circuits (metallic or grounded ringing). Circuits terminate on the back of the units in five KS-16671, L1 plugs. A-25B connector cables must be used for cabling to distributing frame or equivalent. Lamp fusing is provided on the unit.	1 per 10 lines	23	49
237B	Bridging circuit for conferencing on 2 PBX lines.	1 per 2 PBX lines	2-3/5	6
238A	Nine central office or PBX line circuits and common equipment. KS-15900, L1 interrupter is furnished and provides the signal interrupter features as listed for the 232B KTU. The manual intercom (BF) relay is not supplied. Time-out control circuits are furnished in three inter-strapped groups of 4-4 and 1 line(s). Straps are removable for connecting individual line groups to supplemental time-out and interrupter apparatus. Relay battery and lamp signal supplies are wired in four double plus one single circuit groupings.	1 per 9 central office or PBX lines	23	49
239A	Eleven central office or PBX line circuits furnished in three inter-strapped groups of 4-4-3 lines. Each group can be associated with its own time-out and auxiliary interrupter equipment. Relay battery and lamp signal supplies are in five double plus one single circuit groupings.	1 per 11 central office or PBX lines	23	49

* Manufacture discontinued (MD).

† Additions and maintenance only (A&M).

◗ TABLE B ◖

ADAPTABLE 1A2 KTU AND STATION FEATURES FOR USE WITH 1A1 KTS

ORDERING GUIDE	FEATURE OR OPTION	QUANTITY	SIZE (IN.)	CONTACTS	BSP REFERENCE
451B KTU	Music-On-Hold	1 per 7 CO or PBX lines	4	40 (Note 1)	518-215-401
421A KTU	Audible Sig Suppression	1 per station	4	40 (Note 1)	518-215-403
	Power Failure Transfer	1 per 3 CO or PBX lines			
471B KTU	Battery Reversal Toll Restriction	1 per CO line	4	18 (Note 1)	518-215-401
479B KTU*	Rotary Dial Toll Restriction	1 per CO line	8	40 (Note 2)	518-215-401
6B1 Selector Console	Message Waiting and/or Station Busy Indicator	1 per 19 stations			518-010-111
7B1 Selector Console		1 per 39 stations			
2A Transmitter-Receiver	Hands-Free Answering on Intercom (HFAI)	1 per station			518-010-115
107B Loudspeaker	Voice Signaling on Manual Intercom	1 per station			518-010-109

Note 1: The 259-type KTU may be used to mount 18- or 20-contact KTUs (4-inch). The 242A KTU may be used to mount 40-contact KTUs (4-inch).

Note 2: Requires a mounting facility with two 40-pin connectors in a vertical plane [642A panel (Section 518-215-419), 69D (Section 518-215-420) or 110A (Section 518-215-422) apparatus mounting.]

* For use where CO battery reversal is not available.

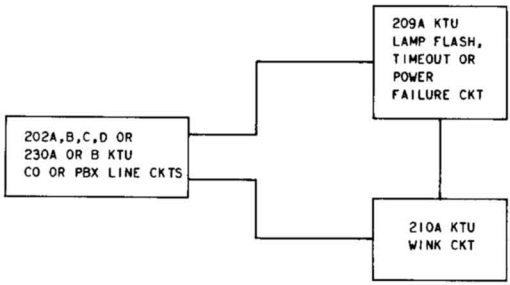

Fig. 3—Block Diagram of CO or PBX Line Circuits (202A, B, C, or D or 230A or B KTUs) With 209A and 210A KTUs for Line Pickup and Hold, Line and Busy Lamps, Metallic or Grounded Ringing, Time-Out, Power Failure, and Lamp Wink

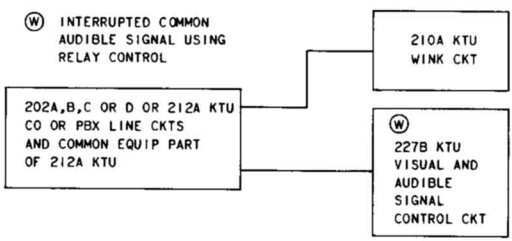

Fig. 4—Block Diagram of CO or PBX Line Circuits (202A, B, C, or D and 212A KTU) With 210A and 227B KTUs for Line Pickup and Hold, Line and Busy Lamps, Common Audible Signals, Time-Out, Lamp Wink, and Power Failure

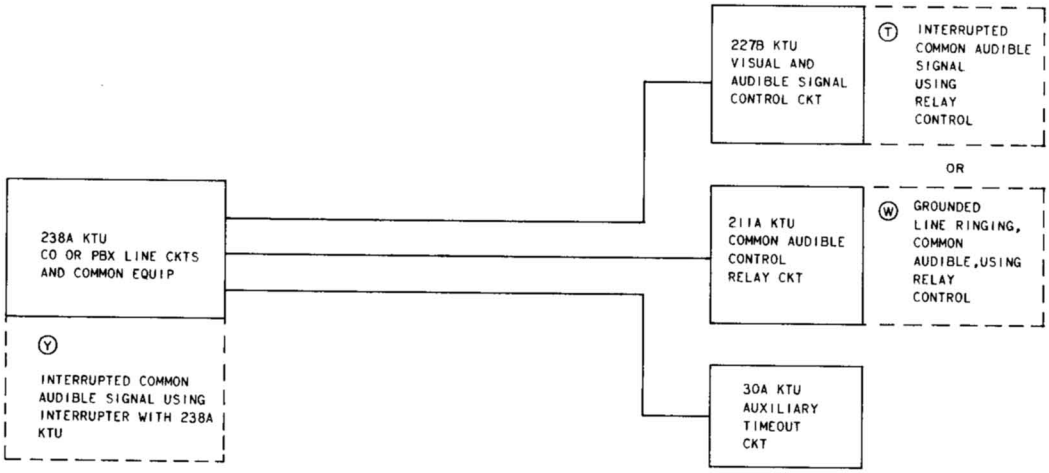

Fig. 5—Block Diagram of CO or PBX Line Circuits (238A KTU) With 30A, 211A and 227B KTUs for Line Pickup and Hold, Line and Busy Lamps, Interrupted Audible Signals, Common Audible Signals, Auxiliary Time-Out and Lamp Wink

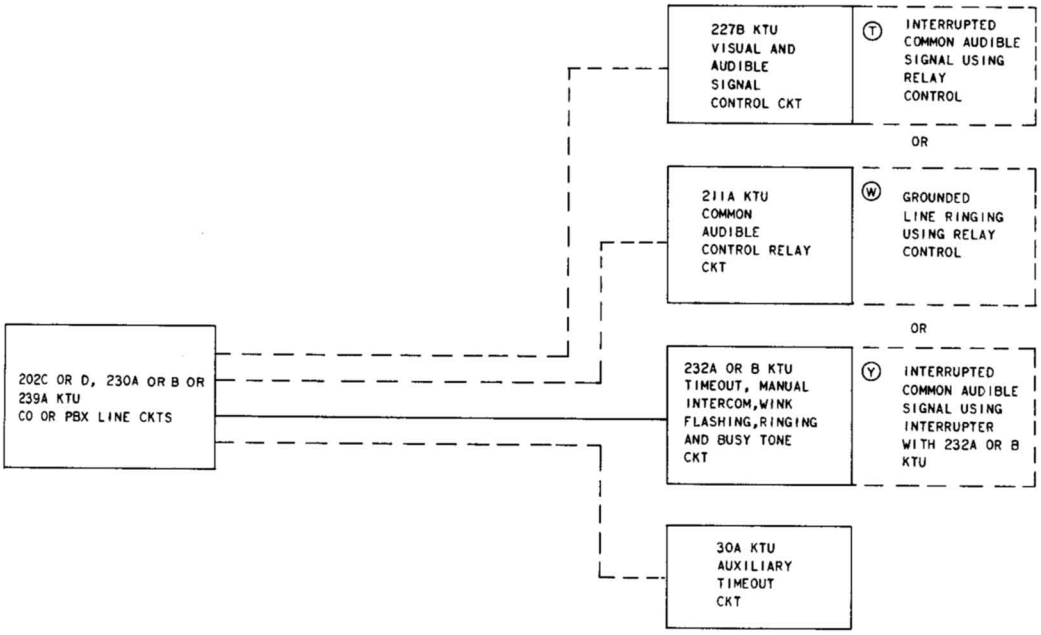

Fig. 6—Block Diagram of CO or PBX Line Circuits (202C or D, 230A or B, or 239A KTUs) With 30A, 211A, 227B and 232-Type KTUs for Line Pickup and Hold, Line and Busy Lamps, Interrupted Audible Signals, Common Audible Signals, Auxiliary Time-Out, Lamp Wink, and Manual Intercom

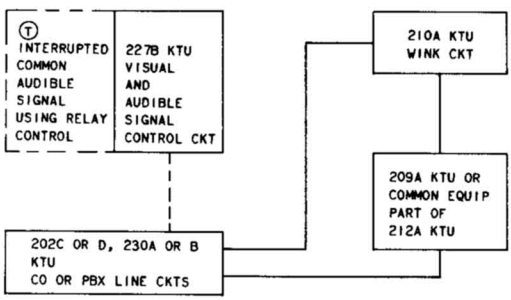

Fig. 7—Block Diagram of CO or PBX Line Circuits (202C or D, or 230A or B KTUs) With 210A, 227B, 209A or Common Equipment Part of 212A KTU for Line Pickup and Hold, Line and Busy Lamps, Common Audible Signals Lamp Wink, and Time-Out

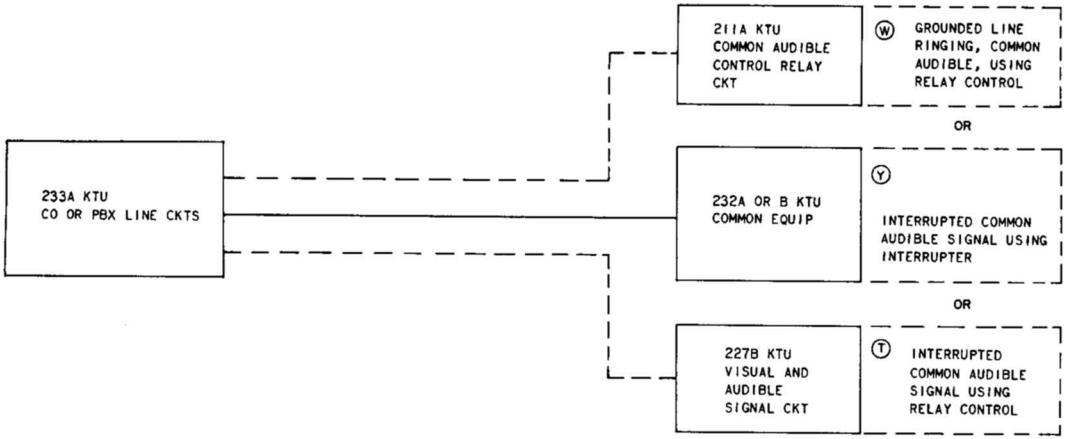

Fig. 8—Block Diagram of CO or PBX Line Circuits (233A KTU) with 211A, 227B and 232-Type KTUs for Line Pickup and Hold, Line and Busy Lamps, Interrupted Common Audible Signals, Lamp Wink, Time-Out, and Manual Intercom

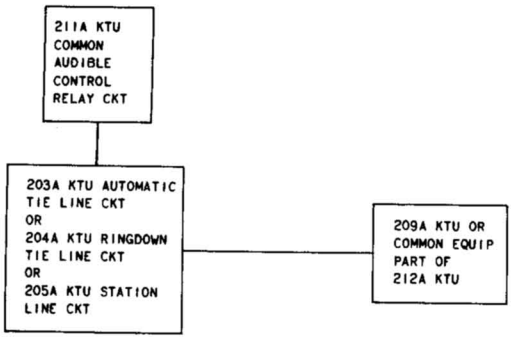

Fig. 9—Block Diagram of Automatic Tie Line Circuit (203A KTU) or Ringdown Tie Line Circuit (204A KTU) or Station Tie Line Circuit (205A KTU) With 211A and 209A or Common Equipment Part of 212A KTU for Steady Common Audible Signals, Line and Busy Lamps, and Time-Out

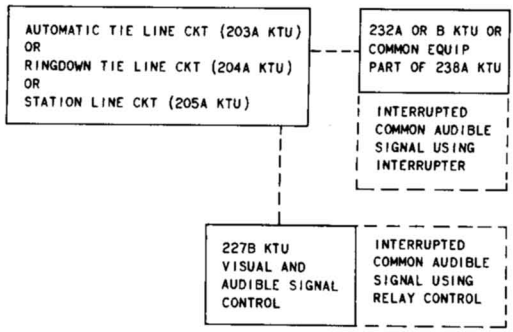

Fig. 10—Block Diagram of Automatic Tie Line Circuit (203A KTU) or Ringdown Tie Line Circuit (204A KTU) or Station Line Circuit (205A KTU) With 232-Type or Common Equipment Part of 238A KTU and 227B KTU for Interrupted Audible or Common Audible Signals, Line and Busy Lamps, Wink, and Time-Out

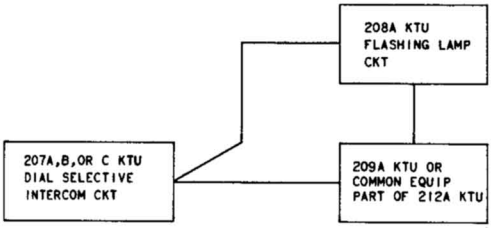

Fig. 11—Block Diagram of Dial Selective Intercom Circuit (207A, B or C KTU) With 208A, 209A or Common Equipment Part of 212A KTU for Flashing Line Lamps, Busy Lamps, Audible Signals, and Time-Out

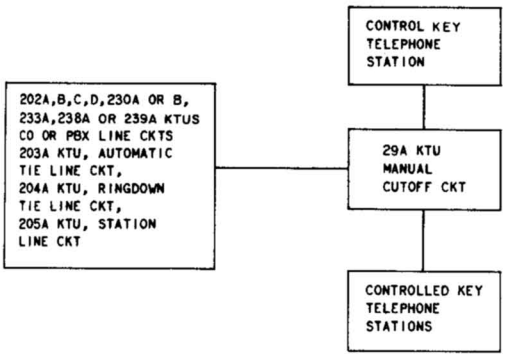

Fig. 12—Block Diagram of Manual Cut-off Circuit (29A KTU) With 202A, B, C or D, 230A or B, 233A, 238A, 239A, 203A, 204A, or 205A KTUs

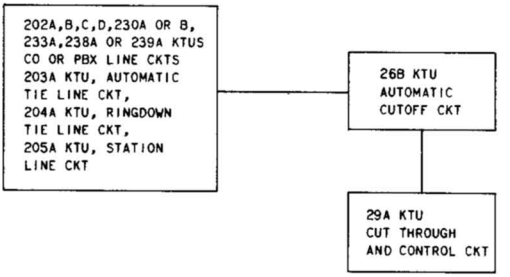

Fig. 13—Block Diagram of Cut-Through and Control Circuit for Automatic Cutoff (26B and 29A KTUs) with 202A, B, C, or D, 230A or B, 233A, 238A, 239A, 203A, 204A, or 205A KTUs

REFERENCE

1A1 KEY TELEPHONE SYSTEM

1. GENERAL

1.01 This section provides installation and maintenance information for the 1A1 Key Telephone System (KTS).

1.02 This section is reissued to add information on 1A2 KTS features and station features adaptable for use with the 1A1 KTS.

2. INSTALLATION

PLANNING

2.01 Figure 1 shows a typical 1A1 KTS installation.

2.02 For information required to select and install 1A1 KTS components and ▶adaptable 1A2 KTS and station features,◀ refer to the following sections:

SECTION	TITLE
463-140-100	Equipment Cabinets and Apparatus Mountings, Identification
518-010-105	Grounding and Special Protection Requirements, Key Telephone Systems
518-010-106	Power Unit Selection, Key Telephone Systems and Key Service Units
518-114-105	Reference, 1A1, Identification and Arrangements
518-114-110	Reference, 1A1 Key Telephone System, Key Telephone Units
518-114-120	Reference, 1A1 Key Service Units
518-114-432	Service, 1A1 Key Service Units
▶518-215-100	Reference, 1A2 Key Telephone System—Identification and Arrangements
518-215-401	Service, 1A2 Key Telephone System—Key Telephone Units, Auxiliary Line Services
518-215-403	Service, 1A2 Key Telephone System—Key Telephone Units, Control Services
518-215-419	Service, 1A2 Key Telephone System—620A, 641A, and 642A Modular Panels
518-215-420	Service, 1A2 Key Telephone System—69B, D, and G Apparatus Mountings
518-215-422	Service, 1A2 Key Telephone System, 110A Apparatus Mounting
518-300-413	Key Telephone Units Common to Several Systems—259-Type, Identification
518-300-417	Key Telephone Units Common to Several Systems—272A Key Telephone Unit, Identification.◀

A. Limitations

2.03 Key telephone system line circuit units are designed for use on central office, Centrex, or PBX lines.

2.04 Because of the hold feature, line circuits should not be installed on party lines.

2.05 See Section 500-114-100, entitled Station Ringing Apparatus, Selection and Limitations,

NOTICE
Not for use or disclosure outside the
Bell System except under written agreement

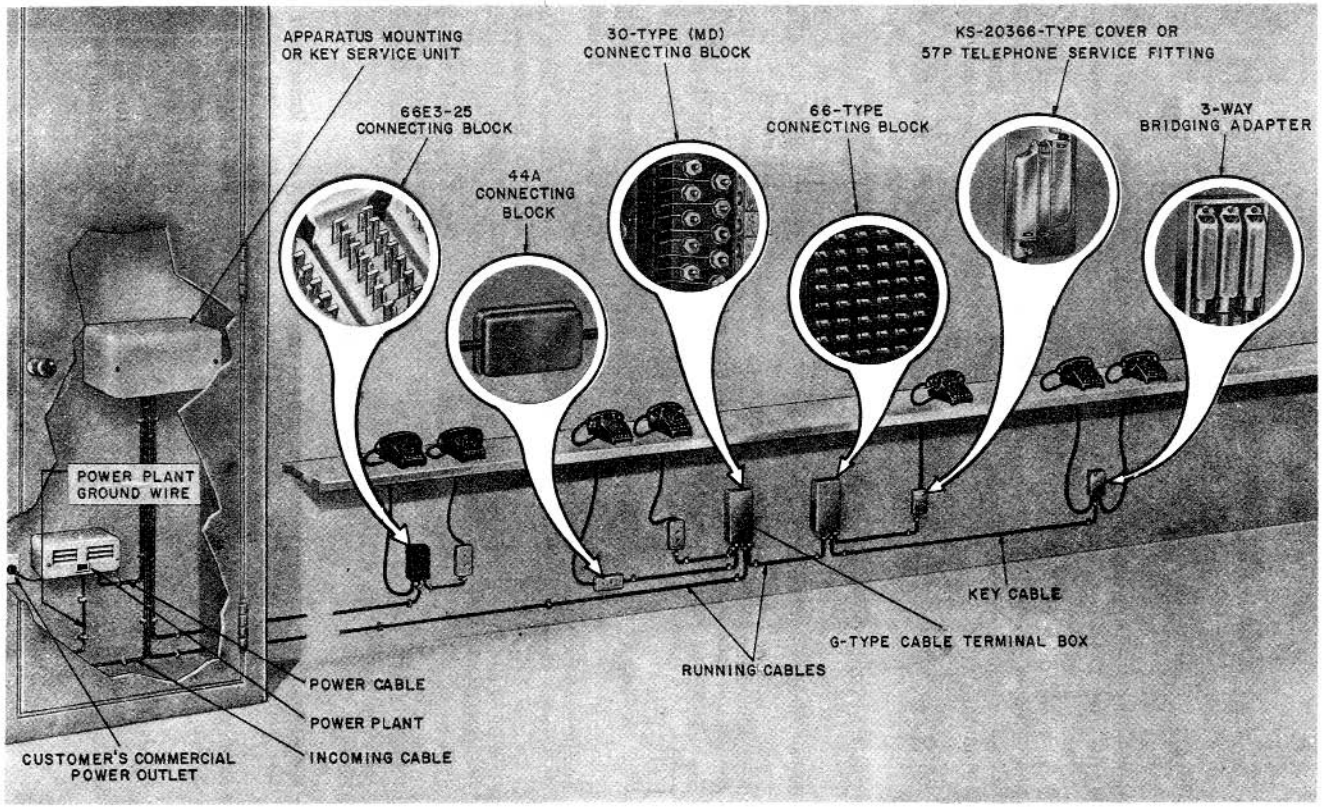

Fig. 1—Typical 1A1 Key Telephone System Installation

for the ***maximum*** number of ringing bridges permitted per line.

2.06 Table A lists approximate maximum distances between the 9- to 11-volt ac supply and the key telephone units.

2.07 Table B gives the approximate maximum cable length between key telephone units and signal lamps.

2.08 Table C shows the types of lamps most often required.

2.09 When more than thirty-six 51A lamps or more than thirty G2 lamps are fed from a J86731A or D power plant or 393B transformer, two circuits must be provided. Each circuit must be equipped with a 2-amp fuse.

INSTALLING

A. Mounting

2.10 The smaller sized KTUs can be mounted in various cabinets or on relay racks by using mounting bars. Large capacity (multiline) 23-inch wide units, designed for equipment cabinet and/or rack-mounted installations and not requiring mounting bars, can also be used. The cabinets and apparatus used can be wall- or floor-mounted. Figures 2 through 6 show various key telephone units and their mountings. ▶Figures 7 through 10 show the mountings available for mounting 400-type KTUs

TABLE A

MAXIMUM POWER CABLE LENGTH AC SUPPLY

AC POWER SUPPLY 9-11 VOLTS	NO. OF 51A LAMPS	NO. OF G2 LAMPS	LENGTH OF RUN FOR ONE PAIR OF 20-GAUGE* COPPER WIRES
			FEET
J86731A, L4 J86731A, L6 J86731B, L1 J86731D, L1 or J86471D, L1 Power Plant 393B Transformer	5	4	315
	10	8	155
	15	12	104
	20	16	78
	25	20	62
	30	24	52
	35	28	44
	40	32	39
	45	36	35
	50	40	24
	55	44	22
	60	48	20
	65	52	18
	70	56	17

* Cable [switchboard, 1450CL (MD), or 450M 6-conductor or 1451CL (MD), or 451M 12-conductor] is a 20-gauge cable suitable for use between power plants and key equipment.

TABLE B

MAXIMUM CABLE LENGTH AC SUPPLY

NO. OF LAMPS PER PAIR	LENGTH OF RUN FOR ONE PAIR OF 24-GAUGE CABLE
	FEET
1	470
2	235
3	155
4	115
5	90
6	75
7	65
8	55
9	50
10	45
11	40
12	35
13	35
14	30
15	30
16	25
17	25
18	25
19	25
20	20

Note: Not more than 20 lamps may be connected to any one line or intercommunicating circuit.

when adaptable 1A2 KTS features are added to 1A1 KTS installations.◀

2.11 Mount cabinets, apparatus mountings, relay racks, or apparatus boxes as described in Section 463-140-100.

B. Wiring

2.12 See appropriate sections for information on:

(a) Selecting, placing, and fastening of wire and cable

(b) Selecting A and/or B-type connector cables and/or adapters

(c) Connections for installation of the particular key telephone system

(d) Wiring of connecting blocks and terminals.

2.13 The use of connector cables and plug-ended key telephone sets is recommended wherever practicable.

2.14 The use of the proper 3-way bridging adapter makes it possible to have two key stations on one adapter or to extend cabling from one station to another.

2.15 For speakerphone connections using connector cables and 148- and 149-type adapters, see Section 461-200-102, entitled Adapters—For Use With Connector Cables.

2.16 Where possible, connecting blocks and connector cables should preferably be placed on walls adjacent to desks.

TABLE C

TYPE OF LAMPS MOST OFTEN REQUIRED

SIGNAL LAMP SUPPLY	LAMP IN TELEPHONE SET	LAMP TYPE INDICATOR AND/OR 101-TYPE KEY UNIT
10 volts ac	51A	G2
14 to 26 volts dc	52A	A3

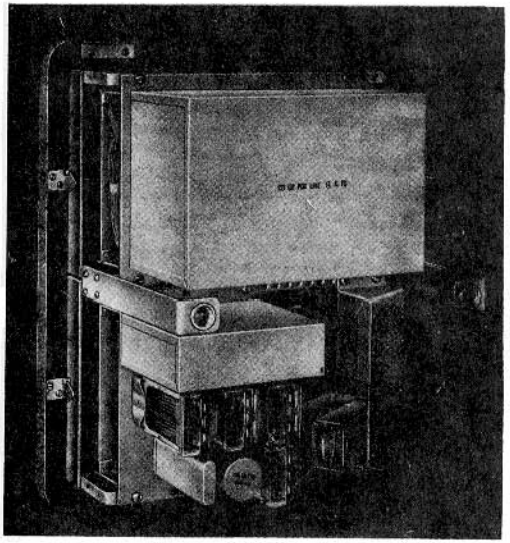

Fig. 2—Two 15A Apparatus Mountings on 173A Backboard

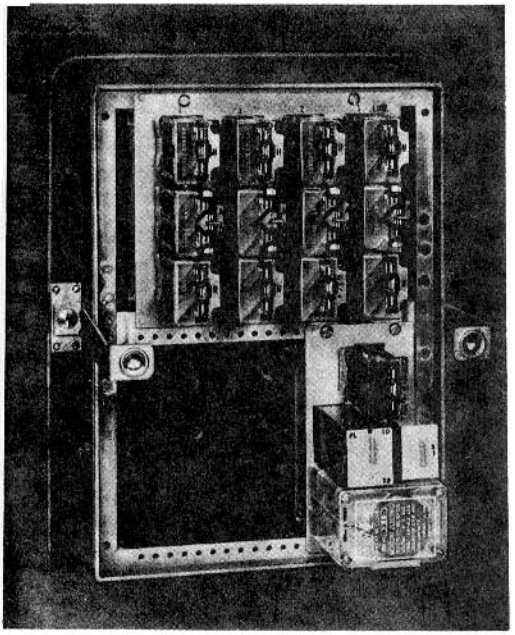

Fig. 3—31A(MD) Apparatus Mounting on 173B Backboard

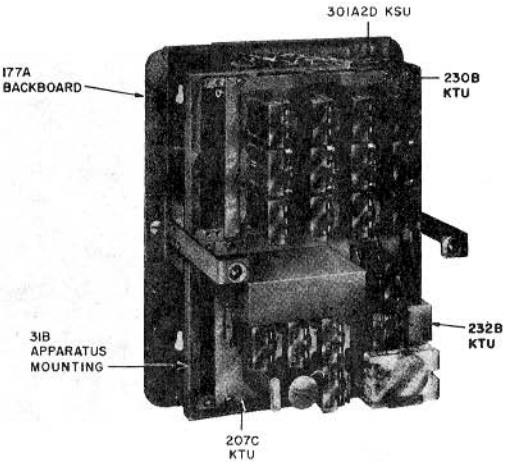

Fig. 4—31B Apparatus Mounting on 177A Backboard

2.17 Key cables may terminate beneath screw terminals of individual 200-type key telephone units, or on 66-type connecting blocks furnished in packaged units. They may also terminate at separate distribution terminals.

2.18 Screw terminals on most 200-type KTUs are arranged to terminate up to six key cables (Fig. 11). In many installations, however, there are considerable advantages in providing a running cable and a supplementary distributing terminal to avoid congestion within the equipment cabinet (Fig. 12).

2.19 Place the distribution terminal in a convenient and accessible location. If possible, centralization of the terminal with respect to station cables served from it is desirable. For information on centralization, refer to Section 518-010-101 entitled Centralized Key Telephone Installations.

2.20 Figures 11, 12, and 13 show the method of cabling to apparatus mountings. Cables may enter from top to bottom.

2.21 Tag or otherwise identify all cables at distribution terminals or on key telephone units.

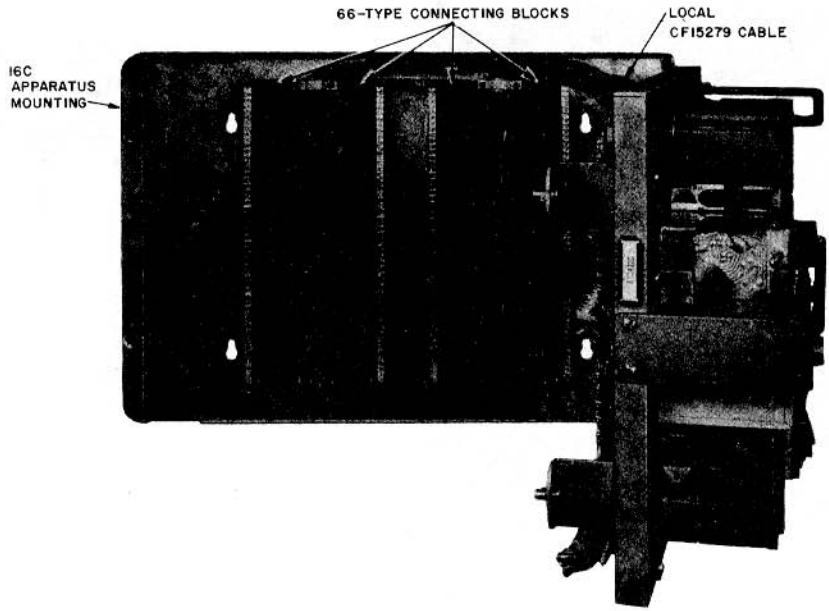

Fig. 5—66-Type Connecting Blocks Mounted Within 16C Apparatus Mounting

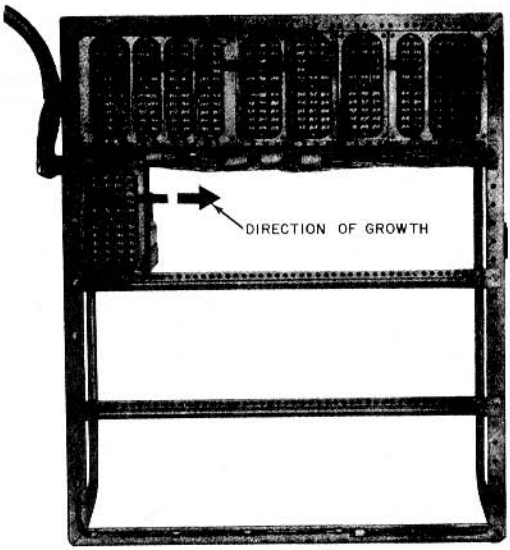

Fig. 6—26A Apparatus Mounting (Showing Direction of Growth)

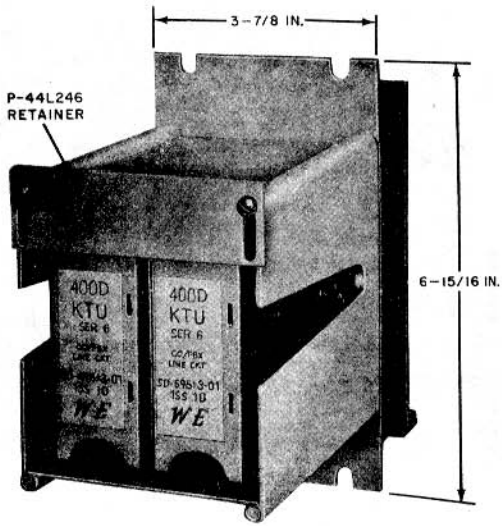

Fig. 7—◆259-Type KTU For Mounting 18 or 20 Contact KTUs◆

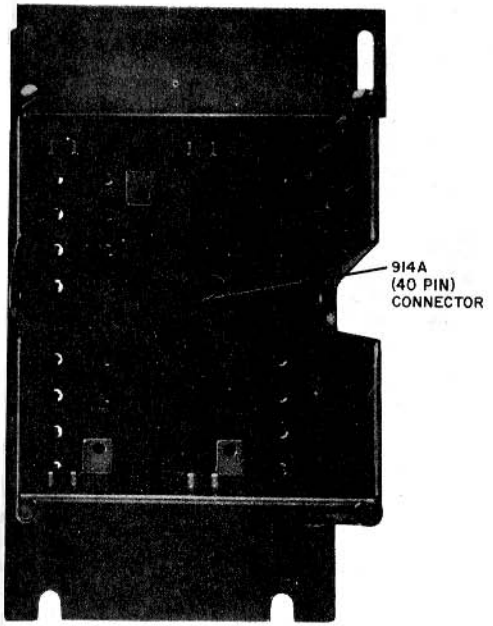

Fig. 8—▶272A KTU For Mounting 40-Pin KTUs◀

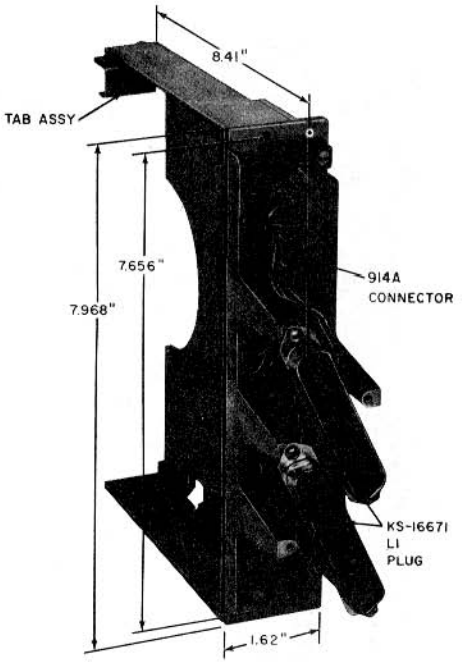

Fig. 9—▶69D Apparatus Mounting For 8-Inch KTUs◀

2.22 Use distinctive colors of 24-gauge BG or BW wire for strapping and cross-connecting key telephone units:

- Red for battery leads
- Black for ground leads
- Green for all other leads.

C. Power

2.23 The basic power requirements for a key telephone system are:

- Relay—14 to 26 volts dc
- Lamp—9 to 11 volts ac or 14 to 26 volts dc
- Ringer—105 volts, 20 Hz
- Buzzer or bells—14 to 28 volts dc or 15 to 25 volts ac.

2.24 More than one key telephone system can be fed by the same power plant provided that:

(a) The power plant has adequate current capacity.

(b) Each key telephone system is fused separately.

2.25 Determine the power supply arrangement to be used by referring to Section 518-010-106.

2.26 Use a 20-gauge wire, or equivalent, between lamp power supply and key telephone units. Figure 14 shows a J86731A, List 4 power plant with power cable and ground wire terminated. Refer to Section 518-010-105 for grounding of the power supply.

2.27 A generator resistance lamp unit should be used when the 105-volt 20-Hz supply is from the central office or PBX. A 211A key telephone unit (ringing lamp unit) can be used when the

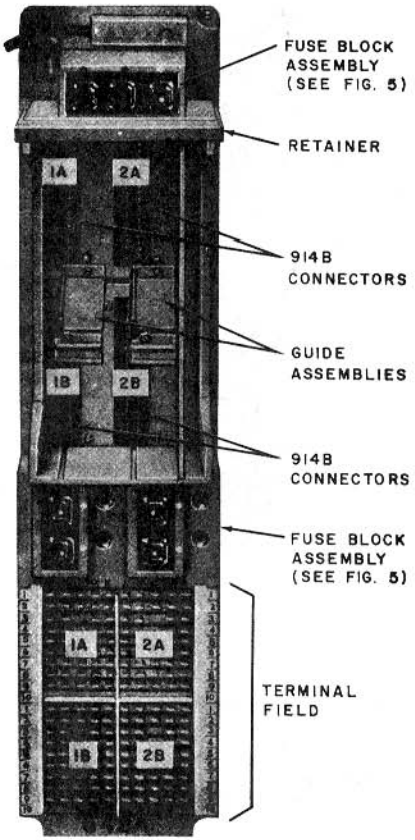

Fig. 10—◊642A Modular Panel For Mounting 8-Inch KTUs◊

105-volt 20-Hz is supplied from a J86731A, List 4 or 5 (107B frequency generator), or a J86731C, List 1 or 2 power plant [107C(MD) frequency generator].

D. Final Tests

2.28 Upon completion of a system installation, check that all features of the system operate properly at each station.

2.29 Check that all stations are equipped with the correct designation cards and strips.

2.30 On systems using commercial power, disconnect the power cord and check that outgoing calls can be made on all lines.

2.31 Before leaving the job, be sure that the customer fully understands the method of operation of the system and its limitations during power interruptions.



In any key system where common audible signals are provided by means of locally furnished power, interruption of this power supply will render ALL visual and audible signals inoperative during the period of power failure. Standby power provisions and/or the use of appropriate power failure switching equipment and/or connection of line ringers, where necessary, will minimize customer inconvenience during interruption of the normal source of power to the installation. This, of course, does not limit the customer from making outgoing calls at any time.

3. MAINTENANCE

A. Relays

3.01 Key telephone system apparatus is designed and manufactured to tolerances and specifications which insure reliable operation and good service with extended useful life. Improper or careless handling of this equipment can result in costly damage. This is particularly true of wire spring relay apparatus. Inspect carefully for:

- Transposed (crossed) contact springs
- Broken actuating cards
- Slipped coverplates
- Jammed cards
- Cracked plastic parts
- Improper position of contact spring.

3.02 When necessary, relays shall be tested and adjusted in accordance with information contained in related subsections of Division 040 of

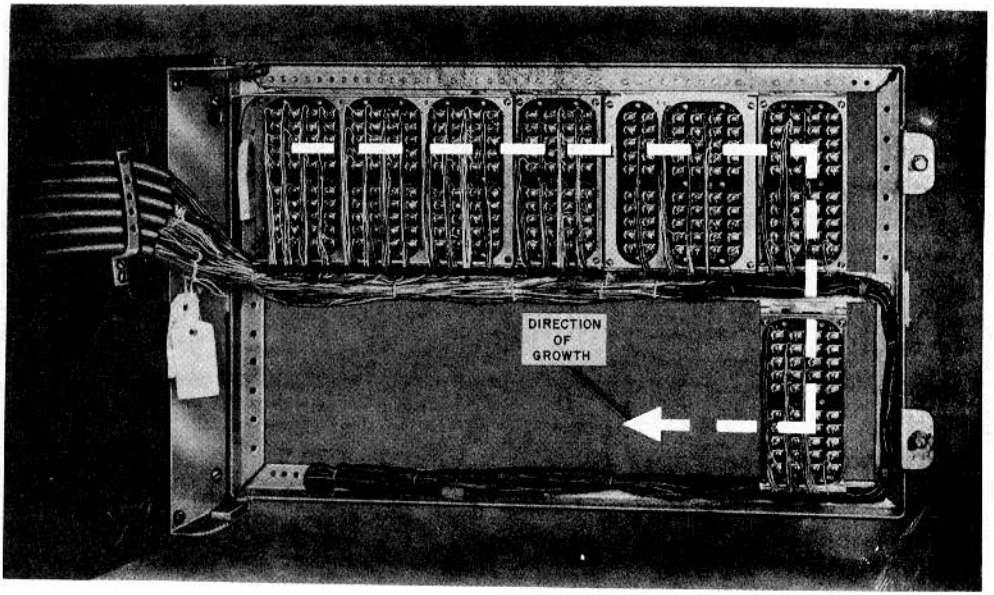

Fig. 11—Key Cables Run Directly to Apparatus Mounting

the Plant Series. Relay operating requirements for specific relays used in various system circuits are listed in the circuit requirement tables. These tables are associated with the various SD drawings concerned.

3.03 The 4A(MD) and 4B cover clips shown in Fig. 15 and 16, respectively, are used to minimize displacement of core plates and contact springs of wire spring relays during shipping and handling. Clips of early manufacture are shown in Fig. 15 (A) and Fig. 17 (A); those of later manufacture in Fig. 15 (B) and Fig. 17 (B). They are interchangeable.

3.04 To place clips:

(1) Slide the clip over the lower end of the cover enough to engage the tang

(2) Press the upper end of the clip over the cover until the tang engages with a snap.

3.05 To remove clips:

(1) Hold clip with left hand. Disengage the top tang and slide clip up and off. [See Fig. 17 (A) and (B).]

3.06 Check position of the plastic cover after placing or removing the 4A(MD) or 4B clip.

3.07 To minimize damage or misplacement of cards due to mishandling in transit, 4A(MD) or 4B clips may also be applied to relays returned to the storeroom.

B. Nonpolarized Electrolytic Capacitor

3.08 A polarized electrolytic KS-14136 capacitor had been used in the early manufacture of some 211A key telephone units. This capacitor has been replaced by a nonpolarized KS-16485 capacitor.

3.09 For a time, the Western Electric Company modified KS-14136 polarized capacitors. Modified capacitors are marked with a red "P"

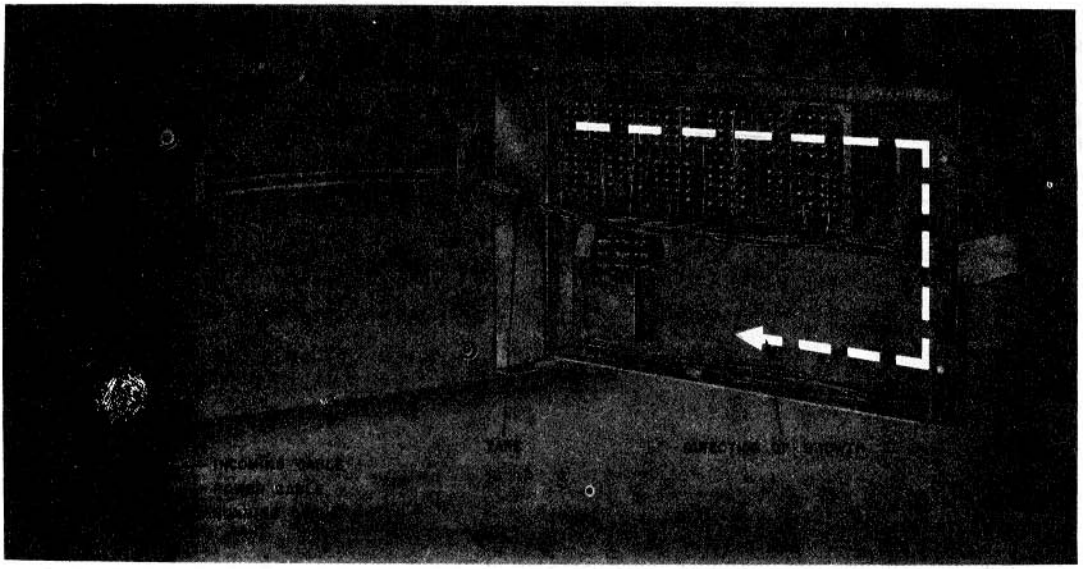

Fig. 12—Installation of Cables on 16-Type Apparatus Mounting

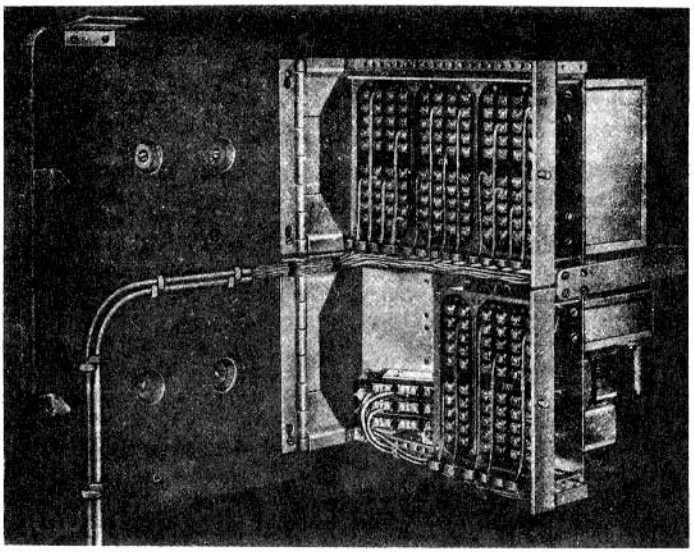

Fig. 13—Method of Cabling on 15A Apparatus Mounting, Right Hinge

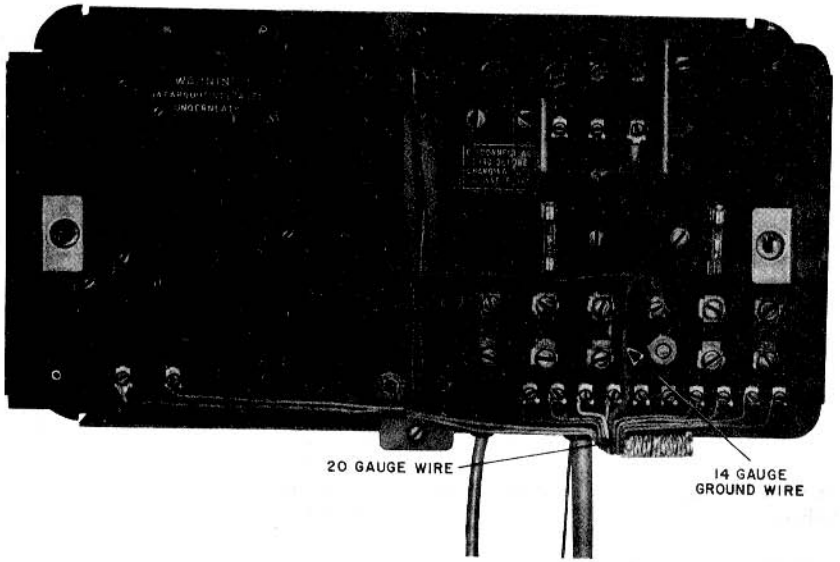

Fig. 14—101G Power Plant With Power Cable Terminated

TABLE D

NOISE ISOLATORS USED WITH KTU'S

KTU	NOISE ISOLATOR ASSEMBLY
207A (MD)	813717063 (P-37A706)
207B (MD), 207C	813821030 (P-38B103)
209A (MD)	813810199 (P-38A019)
210A	813810207 (P-38A020)
212A (MD)	813722345 (P-37B234)

stenciled under the KS number at end of the capacitor.



Do not modify the KS-14136 capacitor in the field.

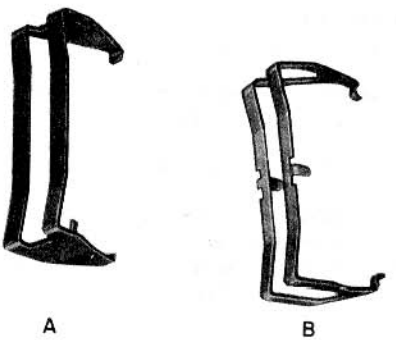

Fig. 15—4A(MD) Cover Clips

3.10 The KS-16485 capacitor, while 1/2-inch longer, is the same diameter as the KS-14136 capacitor and mounts interchangeably with it.

3.11 Replace KS-14136 polarized electrolytic capacitors in all unmodified 211A key telephone

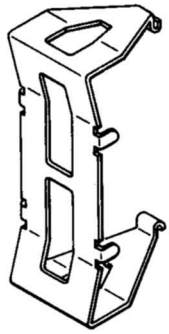

Fig. 16—4B Cover Clip

units. This should be done at the most opportune time, as follows:

(1) Disconnect battery from the working circuit.

(2) Discharge KS-14136 capacitor by momentarily shorting terminals with an insulated-handle screwdriver or equivalent tool.

(3) Disconnect leads from capacitor and remove from mounting.

(4) Mount replacement KS-16485 capacitor in its place and reterminate leads.

(5) Solder all connections.



Since the KS-16485 capacitor is nonpolarized, it is not necessary to determine polarity before reterminating disconnected wires.

(6) Reconnect battery to circuit.

C. Radio Signal Interference

3.12 Radio signal interference may be experienced during talking or when a distant station places a hold on the line. When interference is experienced, refer to Section 500-150-100, entitled Radio Signal Suppression for Telephone Sets.

D. Line Noise

3.13 Some system installations wired for metallic ringing may produce objectionable line noises attributable to the use of unfiltered battery supply on the LK lead. This lead furnishes battery to the locking winding of the R relay. Noise is induced onto the ring side of line (grounded ring option) or on both tip and ring sides of line (metallic ringing option) as the result of transformer action between primary and secondary windings of R relay. This induced noise is heard by the calling party during the silent interval of the ringing cycle until the R relay is released when the called party answers.

3.14 Where this sort of noise is encountered, check to see if unfiltered B battery or filtered A battery is supplied on the LK lead to the R relay. Interference can normally be minimized by connecting filtered battery to the LK lead. Where noise caused by unfiltered battery is present in installations using a 232A(MD) KTU, connect filtered battery on terminal 39 of the 232A(MD) KTU.

3.15 Noise isolators may be used to reduce objectionable noise of operating relays and selectors. Figure 18 shows a typical installation. Table D lists the types of noise isolators used with specified key telephone units.

E. False Hold

3.16 Circuit variables such as line voltage, relay adjustment, contact adjustment, capacitance, etc, may cause the line circuit of 202C(MD), 230A(MD), and 233A(MD) key telephone units to be susceptible to false hold. This condition occurs when the H relay operates falsely, generally caused by:

(a) The amount of ringing bridge capacitance on the station side of the line circuit, or

(b) Switchhook bounce or handset fumble at connection station.

3.17 The false hold condition may be corrected by replacing a 202C(MD) or 230A(MD) KTU with a 202D or 230B KTU or minimized by placing a P-16A279 buffer spring on the H relay of 202C(MD), 230A(MD), or 233A(MD) KTUs (Fig. 19). Although it does not eliminate false holds under all circuit conditions; it is desirable from an economic standpoint to try the buffer spring on in-place units.

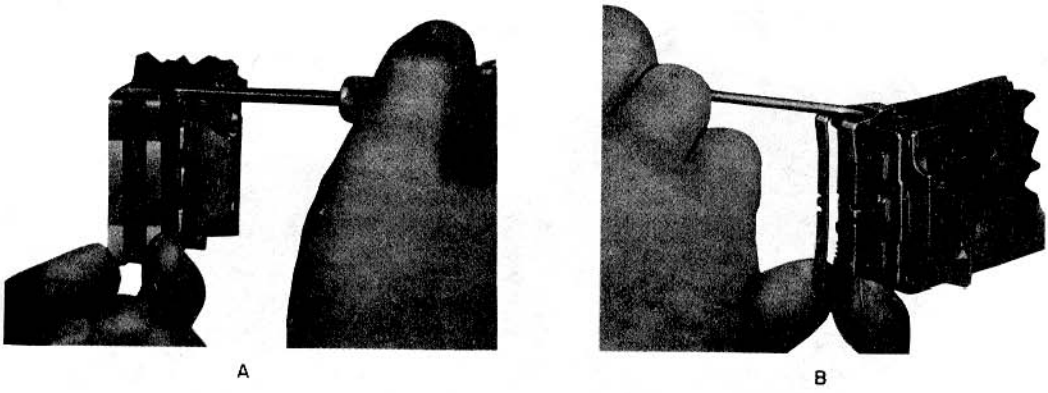

Fig. 17—Removing 4A(MD) Cover Clip

3.18 To test for false hold condition caused by ringing bridge capacitance on 1A1 line circuit:

(1) Set up a condition of maximum current flow in the circuit by using the line to be tested to establish a call over central office trunks to another station line on the same premises.

(2) Hang up on call by rapidly switching to another line button with handset off-hook. If line circuit being tested is subject to false hold from capacitance, it will be indicated by:

(a) (Set illuminated.) A hold lamp indication.

(b) (Set not illuminated.) Absence of dial tone when line key is reoperated, unless equipment is served by a manual PBX or CO.

(c) Operation of H relay (if possible to observe relay equipment while above test is being performed.)

3.19 To test for false hold condition caused by switchhook bounce or handset fumble:

(1) Lift handset from its cradle or mounting and replace it in a rough or abnormal manner—sufficient to cause momentary reoperation of switchhook contacts before handset comes to rest on-hook. If line circuit being tested is subject to false hold, it will be indicated as listed in paragraph 3.18(2).

3.20 If it appears that false hold is due to ringer capacitance, it is recommended that the associated line ringer be wired via a separate cable pair from line side of the affected key telephone unit.

3.21 Where rewiring line ringers is not practical or has no bearing on condition, change the unit to a 202D or 230B KTU or add a P-16A279 buffer spring to the H relay.

3.22 Adding or removing buffer springs is a simple operation. See Fig. 19 for proper position of buffer spring. Adjust the buffer spring tension only a small amount at a time while testing the hold feature as outlined in paragraph 3.18. Apply only enough tension to overcome the false hold condition.

3.23 Where line circuit is capable of being switched to lines of differing loop resistance, the relay must be tested for the variable voltage that may be impressed on the relay winding (ie, for both minimum and maximum current condition). For example, after placing buffer springs on relays for PBX station lines, test for proper holding on station-to-station lines as well as calls to connecting central offices. This avoids the possibility of leaving the H relay in a marginal state to the extent that it will fail to hold properly.

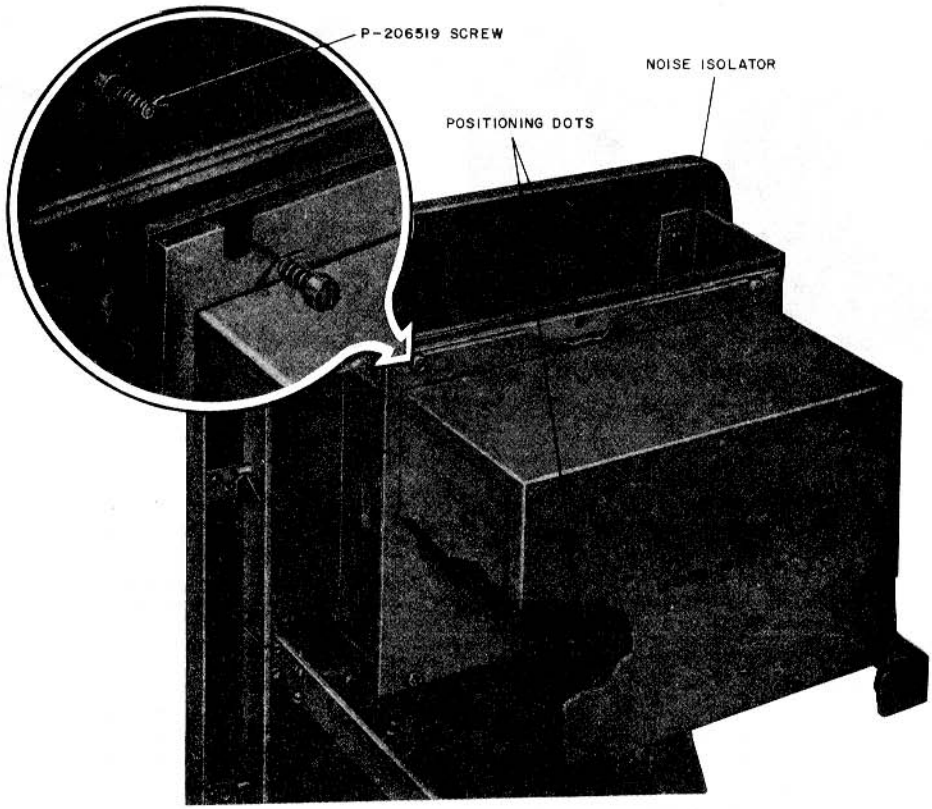

Fig. 18—Noise Isolator Assembly

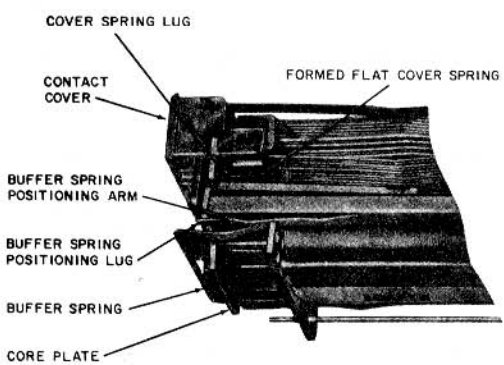

Fig. 19—Positioning of Buffer Spring



In all instances, when a KTU has been modified, tag the unit in a conspicuous location. Enter on the tag sufficient information to easily identify the modification performed. Example: H relay modified with P-16A279 buffer spring because of false hold.

REFERENCE

1A1 KEY TELEPHONE SYSTEM

KEY TELEPHONE UNITS

CONTENTS PAGE

1. GENERAL 2

2. IDENTIFICATION 2

A. 201C KTU (Fuse Unit) 2

B. 202A (MD), 202B, (MD), 202C (MD), and 202D KTUs (CO or PBX Line Circuit) 3

C. 203A KTU (Automatic Tie Line Circuit) 3

D. 204A KTU (Ringdown Tie Line Circuit) 3

E. 205A KTU (Station Line Circuit) . 3

F. 207B (MD) and 207C KTU (Selector Circuit) 3

G. 208A KTU (Signaling Unit for Flashing Line Lamps) 3

H. 209A KTU (MD) (Lamp Flashing and Time-Out Circuit) 3

I. 210A KTU (Wink Circuit) 4

J. 211A KTU (Intercom Line Circuit, Ringing Lamp Circuit, Noise Suppression Circuit, and Audible Signal Control Circuit) 4

K. 212A KTU (MD) (CO or PBX Line Circuit With Lamp Flashing and Incoming Signals Time-Out Circuits) 4

L. 227B KTU (Common Audible Control Circuit) 4

CONTENTS PAGE

M. 228A KTU (Blank Unit) 4

N. 230A (MD) and 230B KTU (CO or PBX Line Circuit) 4

O. 232A (MD), 232B (MD), and 232C KTU (Electro-Mechanical Flash, Wink, Ring, and Time-Out Circuit) . . . 4

P. 233A KTU (MD) (CO or PBX Line Circuit) 4

Q. 237B KTU (Bridging Circuit) . . . 4

R. 238A KTU (CO or PBX Line Circuit) . 5

S. 239A KTU (CO or PBX Line Circuit) . 5

T. 26B KTU (Automatic Cutoff Circuit) . 5

U. 29A KTU (Cut Through Relay Circuit) 5

V. 30A KTU (Time-Out Circuit) . . . 5

Functional Schematics

Fig. 1—201C KTU (Fuse Unit) . . 5

Fig. 2—202A (MD) and 202B KTU (MD) (CO or PBX Line Circuit) . . 6

Fig. 3—202C (MD) and 230A KTU (MD) (CO or PBX Line Circuit) . . 7

Fig. 4—202D, 230B, 238A (Line Circuit Portion), and 239A KTUs (CO or PBX Line Circuit) 8

NOTICE

Not for use or disclosure outside the
Bell System except under written agreement

Printed in U.S.A.

CONTENTS PAGE

Fig. 5—203A KTU (Automatic Tie Line Circuit) 9

Fig. 6—204A KTU (Ringdown Tie Line Circuit) 10

Fig. 7—205A KTU (Station Line Circuit) 11

Fig. 8—207B (MD) and 207C KTU (Selector Circuit) 12

Fig. 9—208A KTU (MD) (Signaling Unit for Flashing Line Lamps) . . 13

Fig. 10—209A KTU (MD) (Lamp Flashing and Time-Out Circuit) 14

Fig. 11—210A KTU (Wink Circuit) . 15

Fig. 12—211A KTU (Intercom Line Circuit, Ringing Lamp Circuit, Noise Suppression Circuit, and Audible Signal Control Circuit) 16

Fig. 13—212A KTU (MD) (CO or PBX Line Circuit With Lamp Flashing and Incoming Signal Time-Out Circuits) . 17

Fig. 14—232-Type KTU (Electro-Mechanical Flash, Wink, Ring, and Time-Out Circuit) 19

Fig. 15—233A KTU (MD) (CO or PBX Line Circuit) 20

Fig. 16—238A KTU (CO or PBX Line Circuit) 22

Fig. 17—26B KTU (Automatic Cutoff Circuit) and 29A KTU (Cut Through Relay Circuit) 23

Fig. 18—30A KTU (Time-Out Circuit) 24

1. GENERAL

1.01 This section identifies the key telephone units (KTUs) used in the 1A1 Key Telephone System. Functional schematics (Fig. 1 through 18) cover the basic circuitry of the KTUs and their relationship with associated apparatus. For additional information on the 1A1 Key Telephone System, refer to Section 518-114-105 for identification and arrangements and Section 518-114-425 for connections.

1.02 This section is reissued to:

- Revise KTU schematics
- Add option table to Fig. 17.

1.03 This issue of the section is based on the following drawings:

SD-69203-01, Issue 7B

SD-69288-01, Issue 18D.

If this section is to be used with equipment or apparatus reflecting later issues of the drawings, reference should be made to the SDs and CDs to determine the extent of the changes and the manner in which the section may be affected.

2. IDENTIFICATION

2.01 The KTUs are individual circuit packages which provide switching and control functions and are arranged for panel mounting in standard equipment cabinets or apparatus mountings.

2.02 The 1A1 Key Telephone System KTUs provide the following station service features:

- Holding on CO, Centrex, or PBX line
- Visual and audible line signals
- Manual and dial intercom
- Cutoff, exclusion, and selective privacy
- Time-out
- Private lines.

A. 201C KTU (Fuse Unit)

2.03 The 201C KTU (Fig. 1) is a fuse mounting unit arranged to mount seven No. 24-type fuses.

B. 202A (MD), 202B (MD), 202C (MD), and 202D KTUs (CO or PBX Line Circuit)

2.04 These KTUs provide:

- Line pickup
- Hold feature
- The control of other KTUs for visual signaling
- Ringing options which include steady ringing, interrupted ringing, and relay control of a common audible signal.

2.05 The 202A and 202B KTUs (Fig. 2) are arranged for grounded ringing only.

2.06 The 202C (Fig. 3) and 202D KTUs (Fig. 4) are arranged for metallic or grounded ringing.

2.07 Ringing options are steady ringing, interrupted ringing, and relay control of a common audible signal.

C. 203A KTU (Automatic Tie Line Circuit)

2.08 The 203A KTU (Fig. 5) is used on private (tie) lines to provide:

- Automatic signaling to the called station
- The control of the KTUs for visual signaling
- Ringing options as shown in paragraph 2.07.

One 203A KTU is required at each end of the private line.

D. 204A KTU (Ringdown Tie Line Circuit)

2.09 The 204A KTU (Fig. 6) is used on private (tie) lines to provide:

- Manual signaling to the called station
- The control of the KTUs for visual signaling
- Ringing options as shown in paragraph 2.07.

One 204A KTU is required at each end of the private line.

E. 205A KTU (Station Line Circuit)

2.10 The 205A KTU (Fig. 7) is used on private (tie) lines to provide:

- Manual signaling toward the distant station
- The control of other KTUs for visual signals
- Ringing options as shown in 2.07.

One 205A KTU is required to serve both the originating and terminating stations.

F. 207B (MD) and 207C KTU (Selector Circuit)

2.11 The 207B and 207C KTUs (Fig. 8) are the basic selector only intercom unit. The KTUs provide:

- Station Selection
- Busy Lamp
- Audible Signaling.

Each 207B or 207C KTU can serve nine stations.

G. 208A KTU (Signaling Unit for Flashing Line Lamps)

2.12 The 208A KTU (Fig. 9) is used on intercom lines to control:

- Flashing and busy lamp signals at the called station
- Time-out at the called station.

The 208A KTU serves three stations and is used in conjunction with the 207B or 207C KTU.

H. 209A KTU (MD) (Lamp Flashing and Time-Out Circuit)

2.13 The 29A KTU (Fig. 10) is used on CO or PBX lines to provide:

- Interruption interval for flashing lamps
- Time-out of locked-in signals approximately 30 seconds after a call is abandoned.

The 209A KTU can serve five lines when wink option is provided and six lines when wink option is not provided.

I. 210A KTU (Wink Circuit)

2.14 The 210A KTU (Fig. 11) is used on CO or PBX lines to provide the interruption interval for the wink option.

J. 211A KTU (Intercom Line Circuit, Ringing Lamp Circuit, Noise Suppression Circuit, and Audible Signal Control Circuit)

2.15 The 211A KTU (Fig. 12) is used on intercom lines to provide:

- Busy lamp (other signals must be provided separately)
- Protection against an overload of the ringing supply
- Noise suppression circuit
- Independent common audible control of two lines to the same station.

K. 212A KTU (MD) (CO or PBX Line Circuit With Lamp Flashing and Incoming Signals Time-Out Circuits)

2.16 The 212A KTU (Fig. 13) provides line pickup on three CO or PBX lines and common equipment for up to six lines.

L. 227B KTU (Common Audible Control Circuit)

2.17 The 227B KTU contains three relays which provide control for:

- Auxiliary lamp relay circuits
- Multisignals, ie, buzzers, bells, or ringers
- Common audible signals (CO, Centrex, or PBX line circuits).

2.18 Refer to Section 518-310-401 for additional information on the 227B KTU.

M. 228A KTU (Blank Unit)

2.19 The 228A KTU is a blank unit with 40 screw type terminals. It is used for miscellaneous purposes.

N. 230A (MD) and 230B KTU (CO or PBX Line Circuit)

2.20 The 230A KTU (Fig. 3) is the equivalent of five 202C line circuits, and the 230B KTU (Fig. 4) is the equivalent of four 202D line circuits.

O. 232A (MD), 232B (MD), and 232C KTU (Electro-Mechanical Flash, Wink, Ring, and Time-Out Circuit)

2.21 The 232A or 232B KTU (Fig. 14) plus the associated interrupter provides the following timing features:

- Audible signals
- Lamp flash
- Lamp wink
- Busy tone
- Audible ringback
- Time-out on abandoned call
- Busy lamp control for manual intercom line.

P. 233A KTU (MD) (CO or PBX Line Circuit)

2.22 The 233A KTU (Fig. 15) is the equivalent of ten 202C KTUs. Circuits terminate on back of units in five KS-16671L1 plugs. A25B connector cables must be used for cabling to distributing frame or equivalent. Lamp fusing is provided on the unit.

Q. 237B KTU (Bridging Circuit)

2.23 The 237B KTU provides an arrangement for bridging two PBX lines for conferencing purposes under control of an exclusion or nonlocking key at a key telephone station.

2.24 Refer to Section 518-310-407 for additional information on the 237B KTU.

R. 238A KTU (CO or PBX Line Circuit)

2.25 The 238A KTU (Fig. 16) is the equivalent of nine 202D (Fig. 4) KTUs. It also contains circuitry to provide all the functions of the 232A or 232B KTUs (see paragraph 2.21).

S. 239A KTU (CO or PBX Line Circuit)

2.26 The 239A KTU is the equivalent of eleven 202D (Fig. 4) KTUs. The 239A KTU is arranged in line groups of 4-4-3 and each line group can be associated with its own time-out and auxiliary interrupter equipment.

T. 26B KTU (Automatic Cutoff Circuit)

2.27 The 26B KTU (Fig. 17) disconnects cutoff stations from CO or PBX lines under control of the ◗29B◖ KTU. One 268 KTU will serve five cutoff stations.

U. 29A KTU (Cut Through Relay Circuit)

2.28 The 29A KTU (Fig. 17) is used to provide manual cutoff on CO or PBX lines.

V. 30A KTU (Time-Out Circuit)

2.29 The 30A KTU (Fig. 18) provides system time-out on abandoned calls. The KTU will time-out approximately 20 seconds after the call is abandoned.

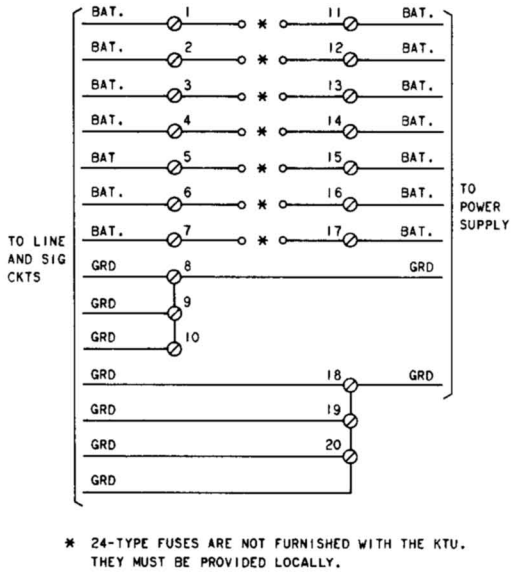

Fig. 1—Functional Schematic of 201C KTU (Fuse Unit)

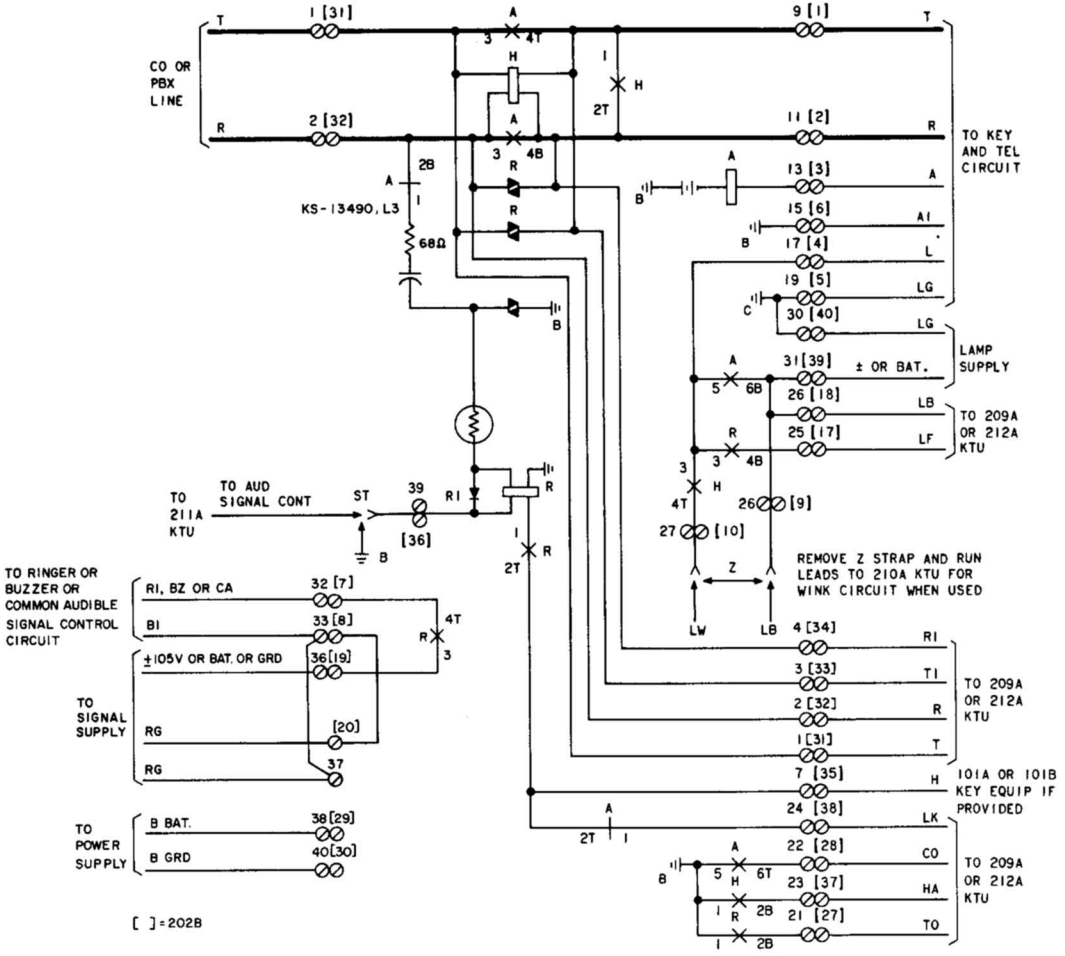

Fig. 2—Functional Schematic of 202A (MD) and 202B KTU (MD) (CO or PBX Line Circuit)

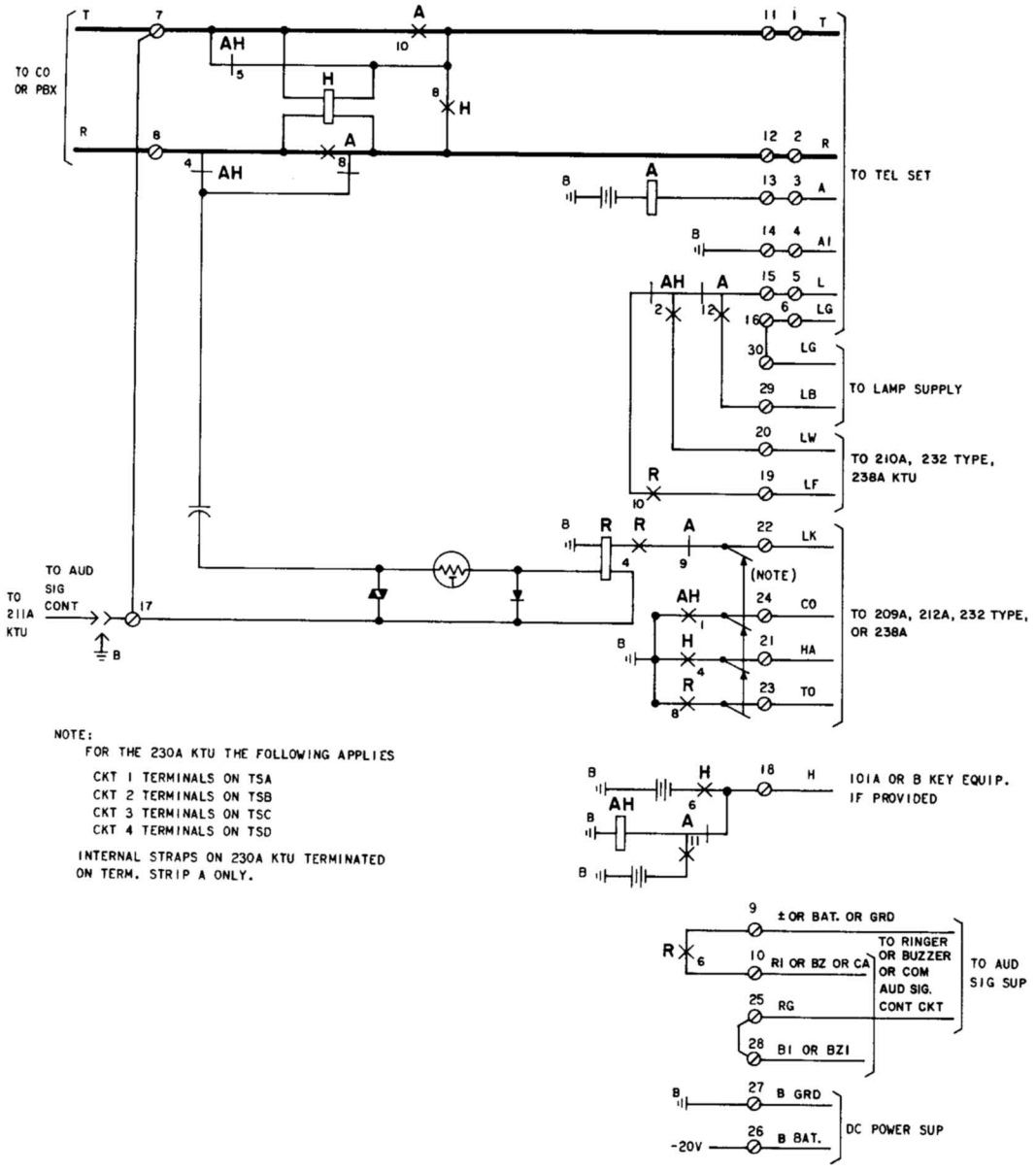

NOTE:
FOR THE 230A KTU THE FOLLOWING APPLIES

CKT 1 TERMINALS ON TSA
CKT 2 TERMINALS ON TSB
CKT 3 TERMINALS ON TSC
CKT 4 TERMINALS ON TSD

INTERNAL STRAPS ON 230A KTU TERMINATED ON TERM. STRIP A ONLY.

Fig. 3—Functional Schematic of 202C (MD) and 230A KTU (MD) (CO or PBX Line Circuit)

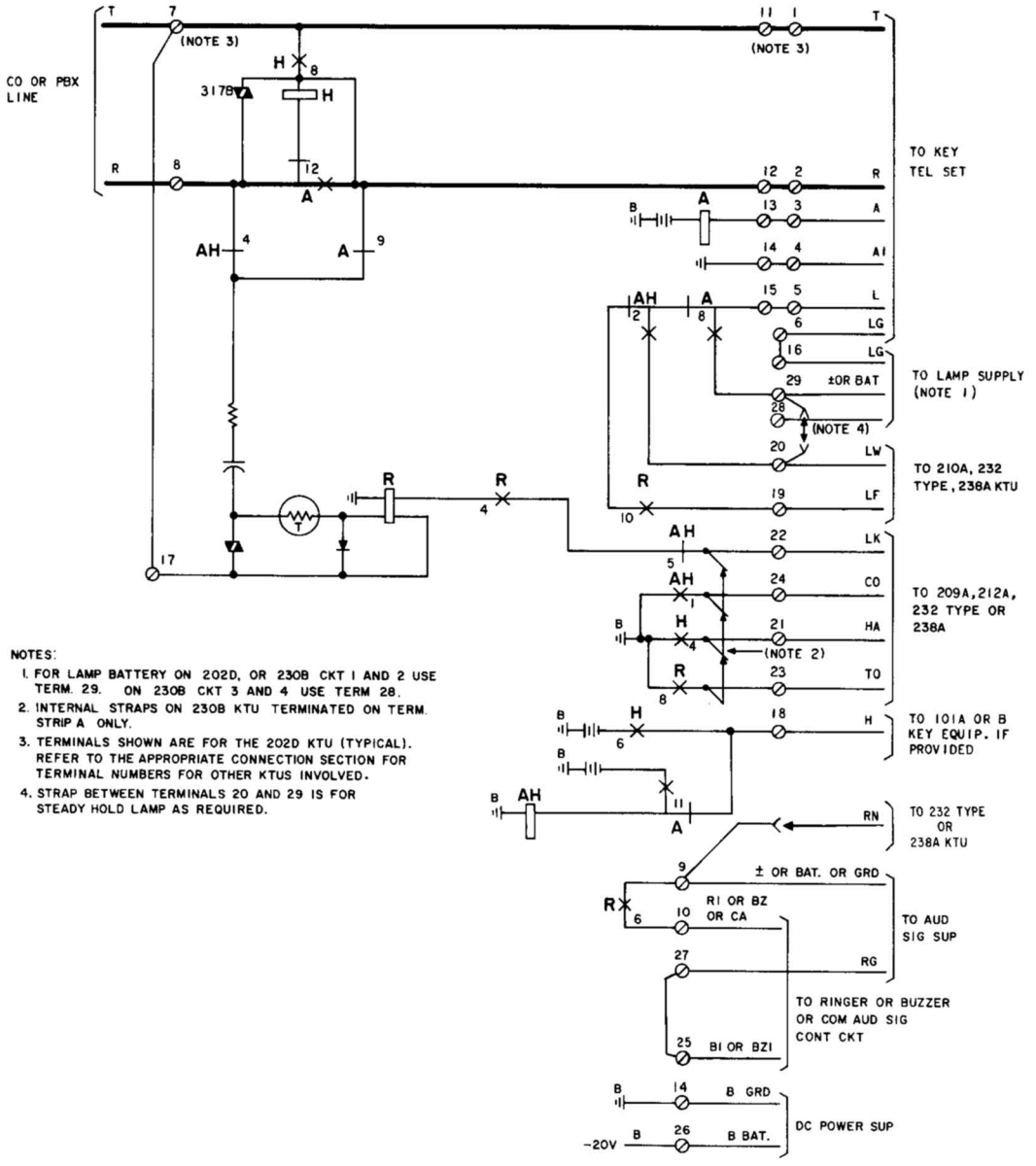

NOTES:

1. FOR LAMP BATTERY ON 202D, OR 230B CKT 1 AND 2 USE TERM. 29. ON 230B CKT 3 AND 4 USE TERM 28.
2. INTERNAL STRAPS ON 230B KTU TERMINATED ON TERM. STRIP A ONLY.
3. TERMINALS SHOWN ARE FOR THE 202D KTU (TYPICAL). REFER TO THE APPROPRIATE CONNECTION SECTION FOR TERMINAL NUMBERS FOR OTHER KTUS INVOLVED.
4. STRAP BETWEEN TERMINALS 20 AND 29 IS FOR STEADY HOLD LAMP AS REQUIRED.

Fig. 4—Functional Schematic of 202D, 230B, 238A (Line Circuit Portion) and 239A KTUs (CO or PBX Line Circuit)

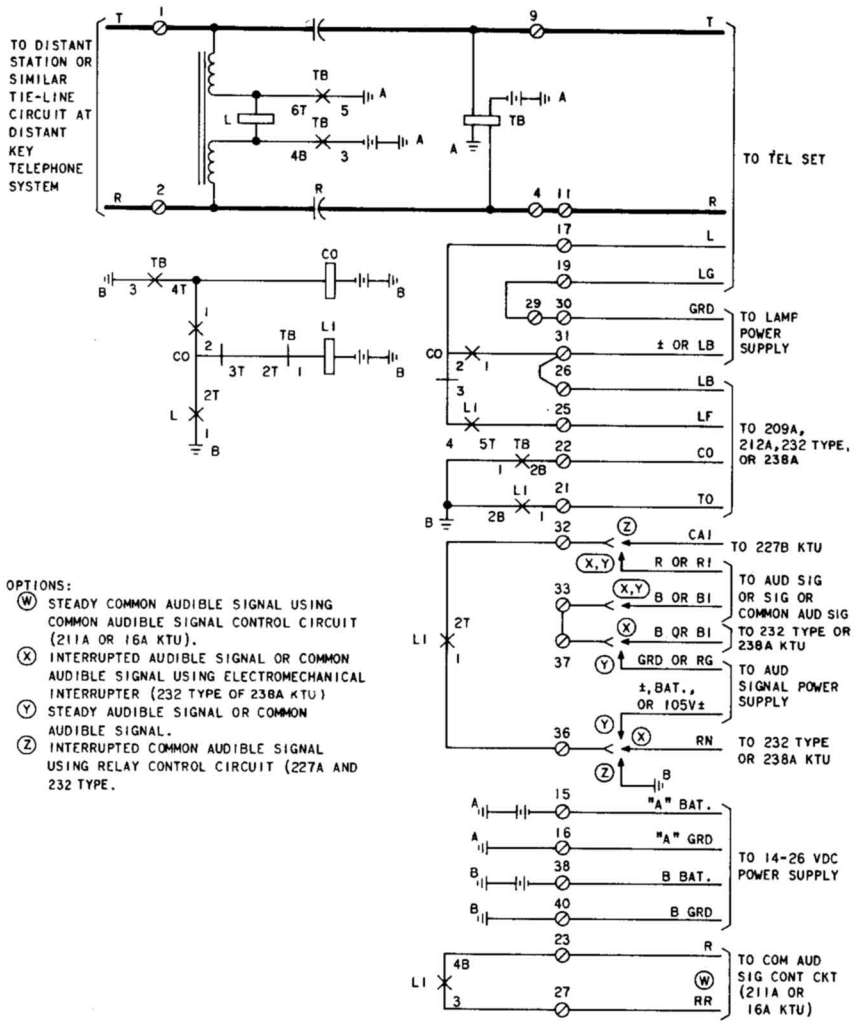

Fig. 5—Functional Schematic of 203A KTU (Automatic Tie Line Circuit)

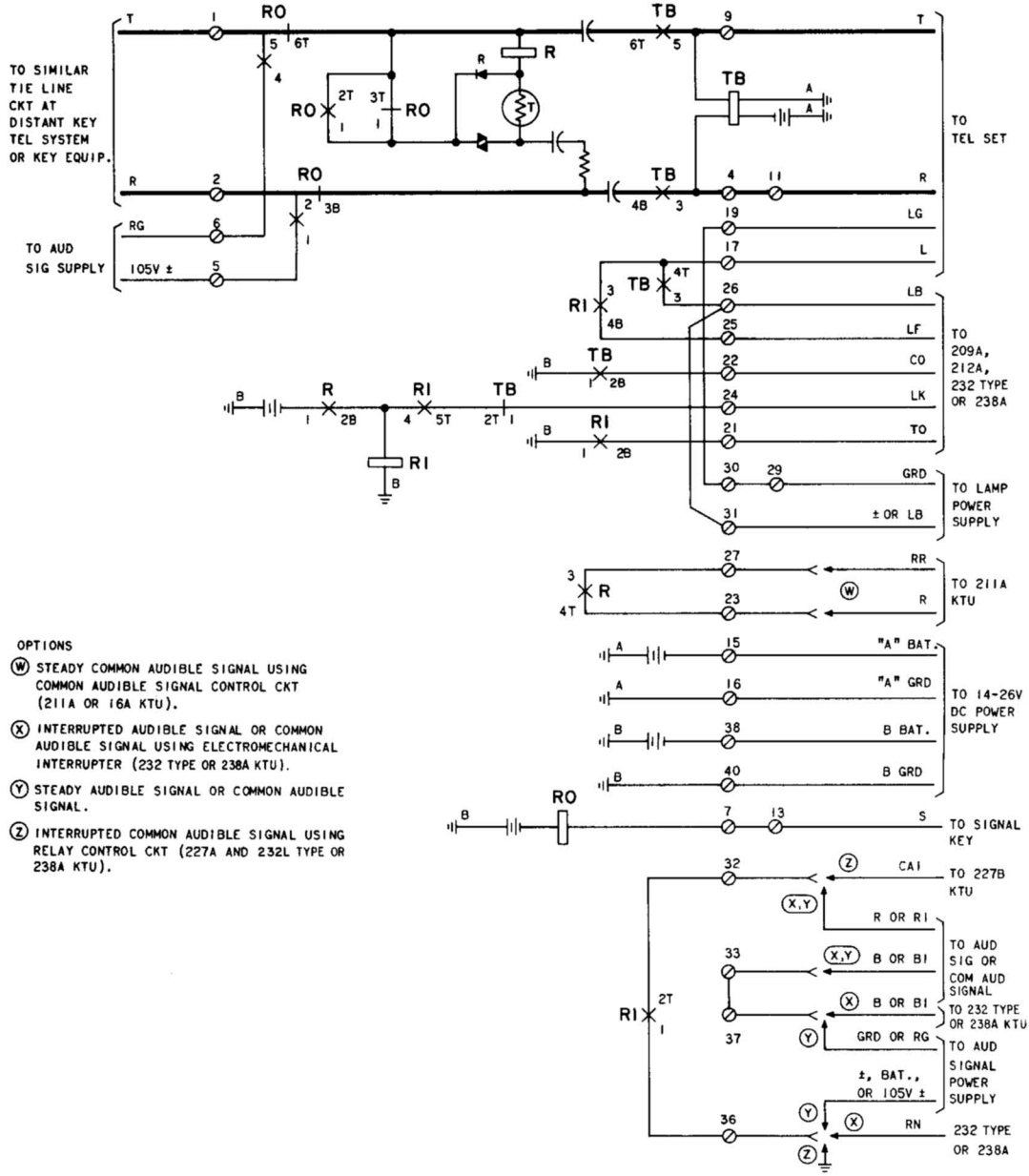

Fig. 6—Functional Schematic of 204A KTU (Ringdown Tie Line Circuit)

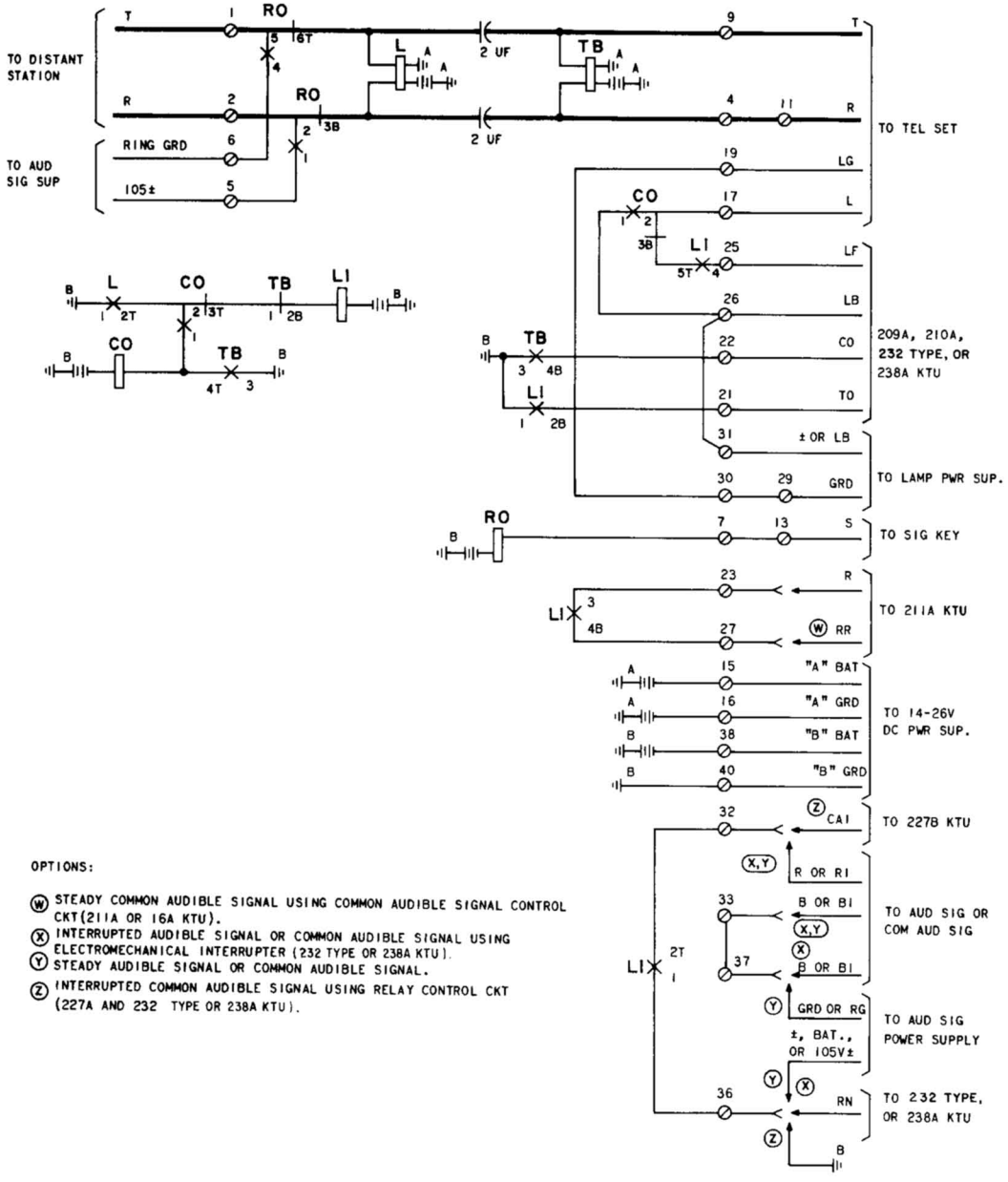

OPTIONS:

(W) STEADY COMMON AUDIBLE SIGNAL USING COMMON AUDIBLE SIGNAL CONTROL CKT(211A OR 16A KTU).
(X) INTERRUPTED AUDIBLE SIGNAL OR COMMON AUDIBLE SIGNAL USING ELECTROMECHANICAL INTERRUPTER (232 TYPE OR 238A KTU).
(Y) STEADY AUDIBLE SIGNAL OR COMMON AUDIBLE SIGNAL.
(Z) INTERRUPTED COMMON AUDIBLE SIGNAL USING RELAY CONTROL CKT (227A AND 232 TYPE OR 238A KTU).

Fig. 7—Functional Schematic of 205A KTU (Station Line Circuit)

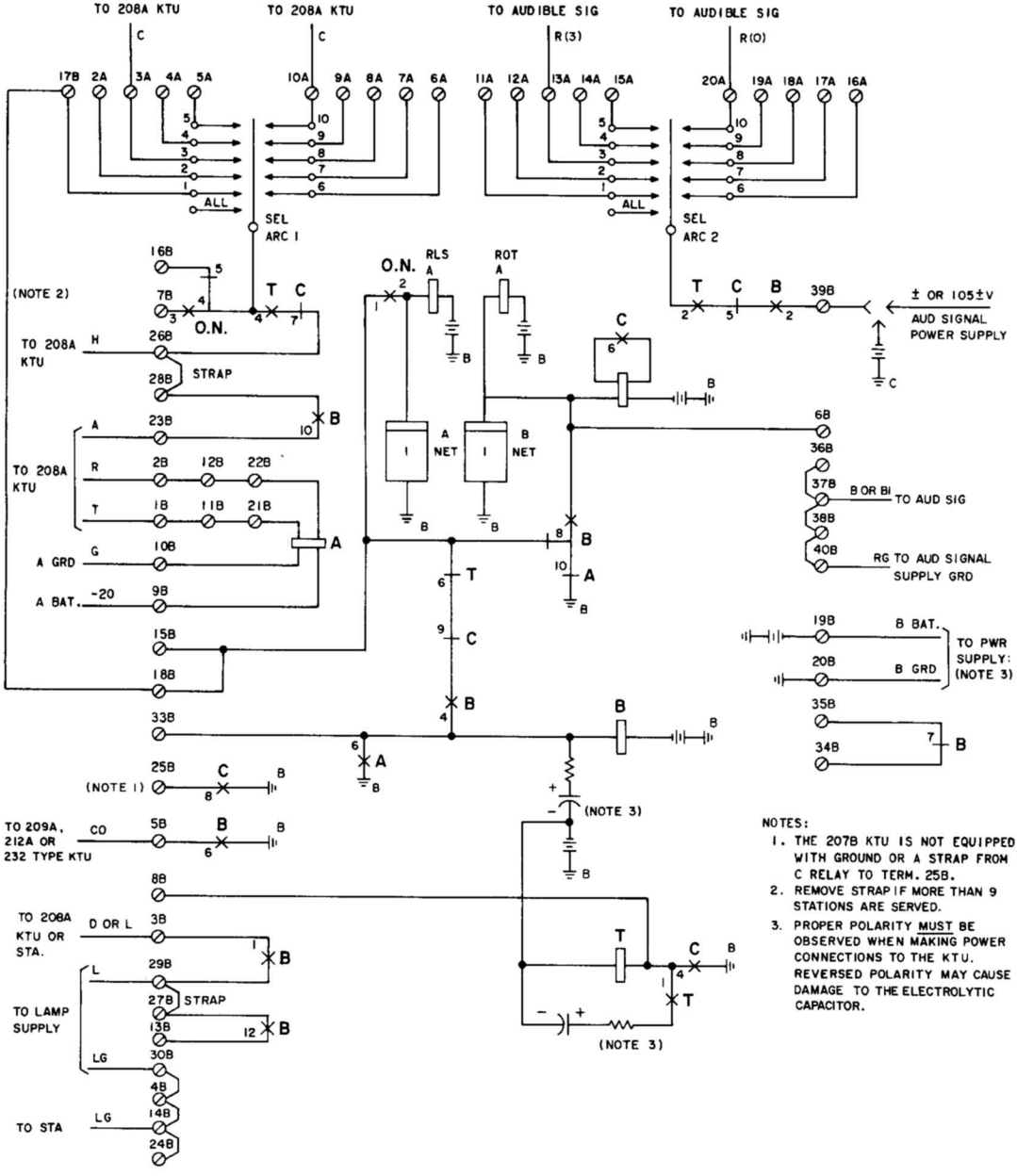

Fig. 8—Functional Schematic of 207B (MD) and 207C KTU (Selector Circuit)

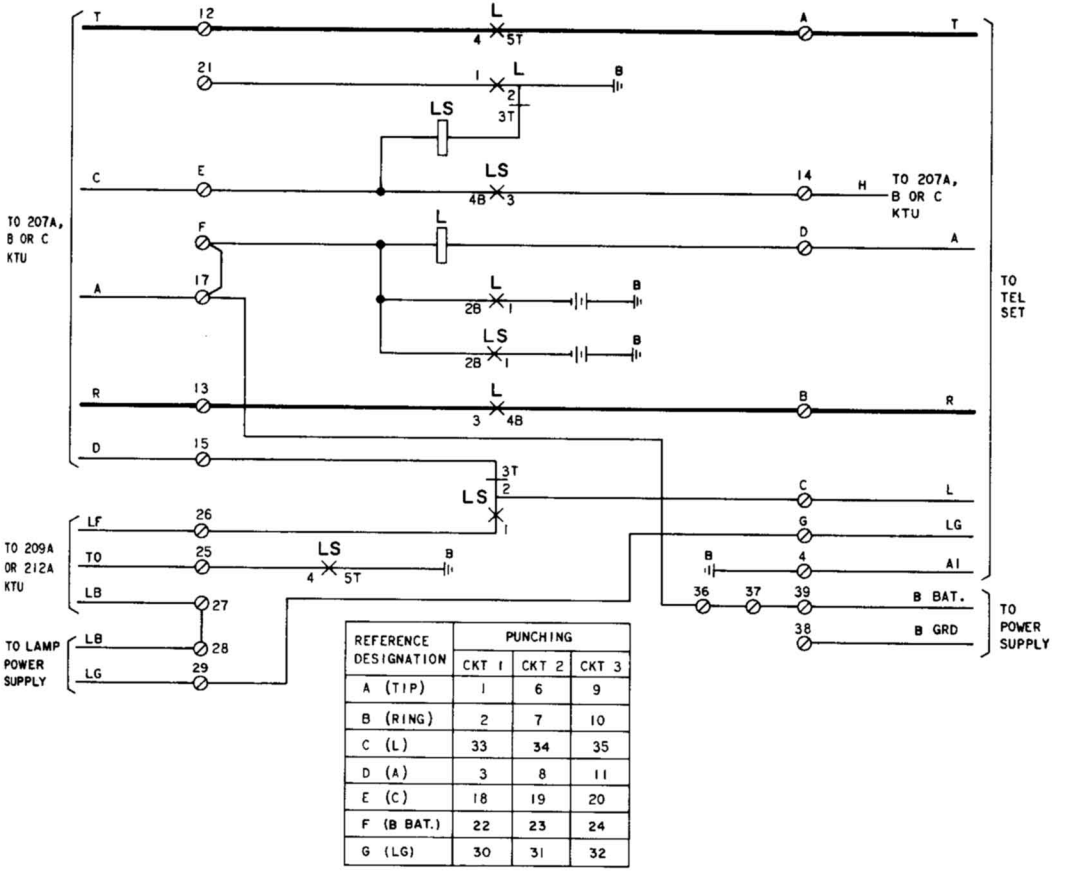

REFERENCE DESIGNATION	PUNCHING		
	CKT 1	CKT 2	CKT 3
A (TIP)	1	6	9
B (RING)	2	7	10
C (L)	33	34	35
D (A)	3	8	11
E (C)	18	19	20
F (B BAT.)	22	23	24
G (LG)	30	31	32

Fig. 9—Functional Schematic of 208A KTU (MD) (Signaling Unit for Flashing Line Lamps)

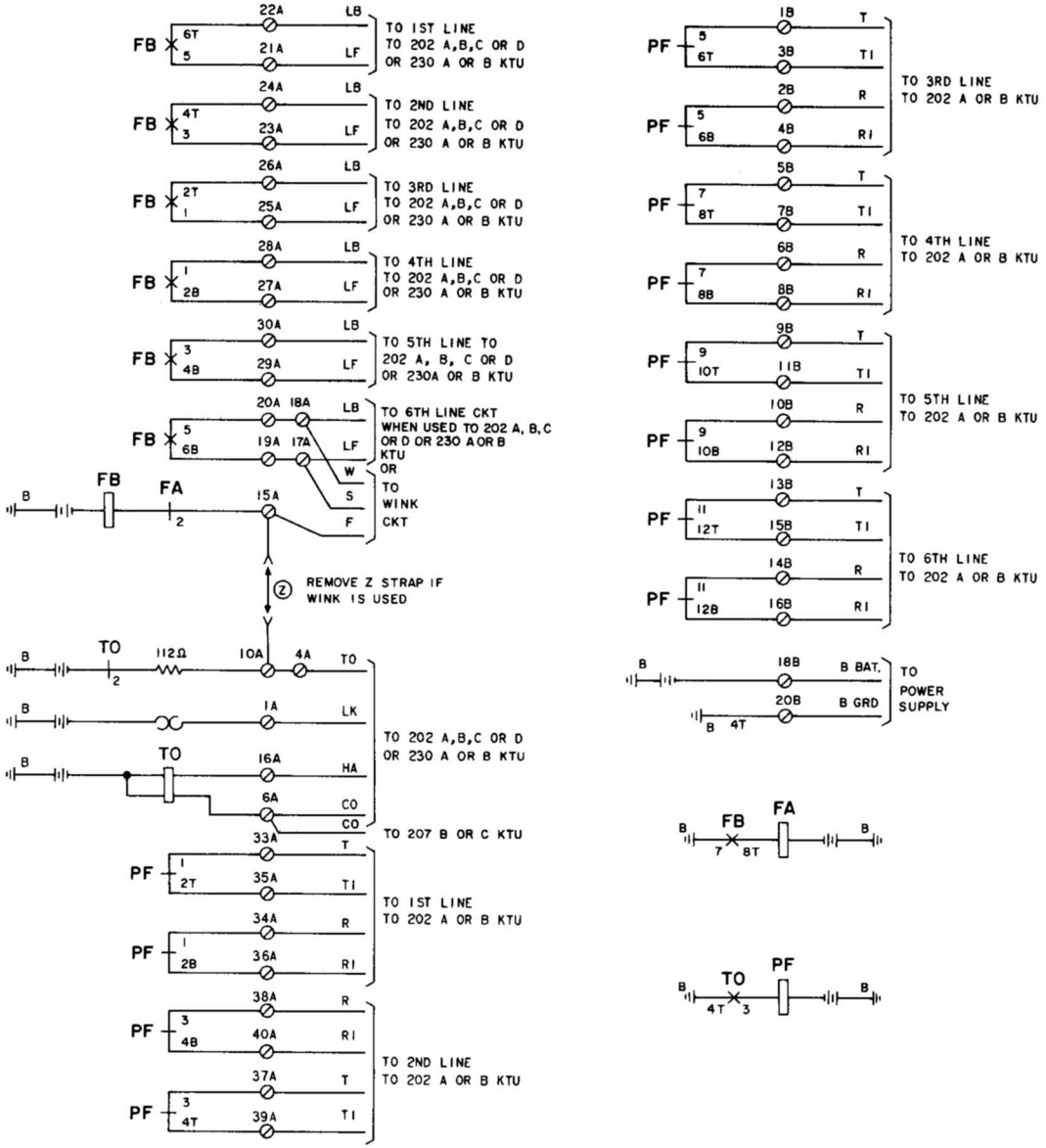

Fig. 10—Functional Schematic of 209A KTU (MD) (Lamp Flashing and Time-Out Circuit)

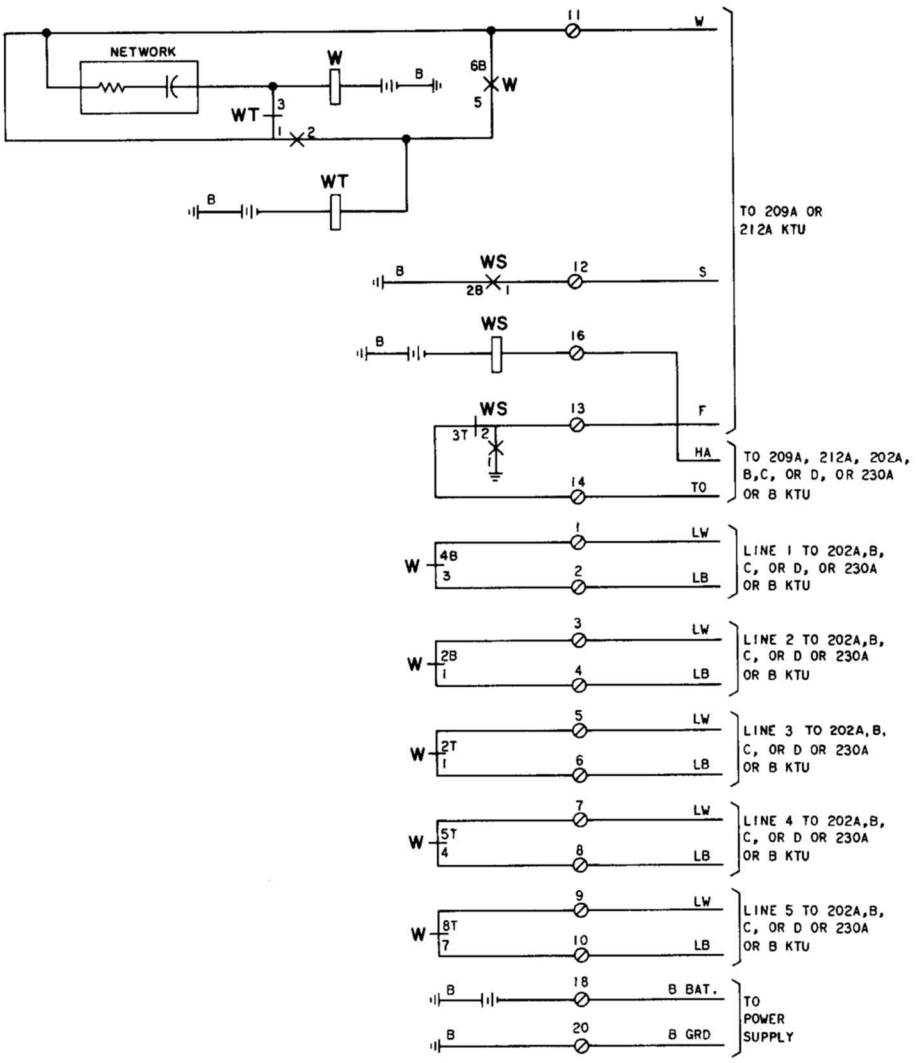

Fig. 11—Functional Schematic of 210A KTU (Wink Circuit)

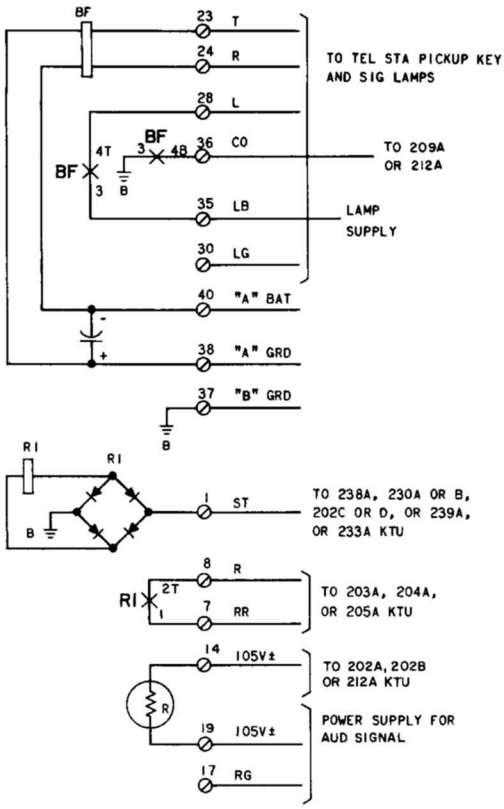

Fig. 12—Functional Schematic of 211A KTU (Intercom Line Circuit, Ringing Lamp Circuit, Noise Suppression Circuit, and Audible Signal Control Circuit)

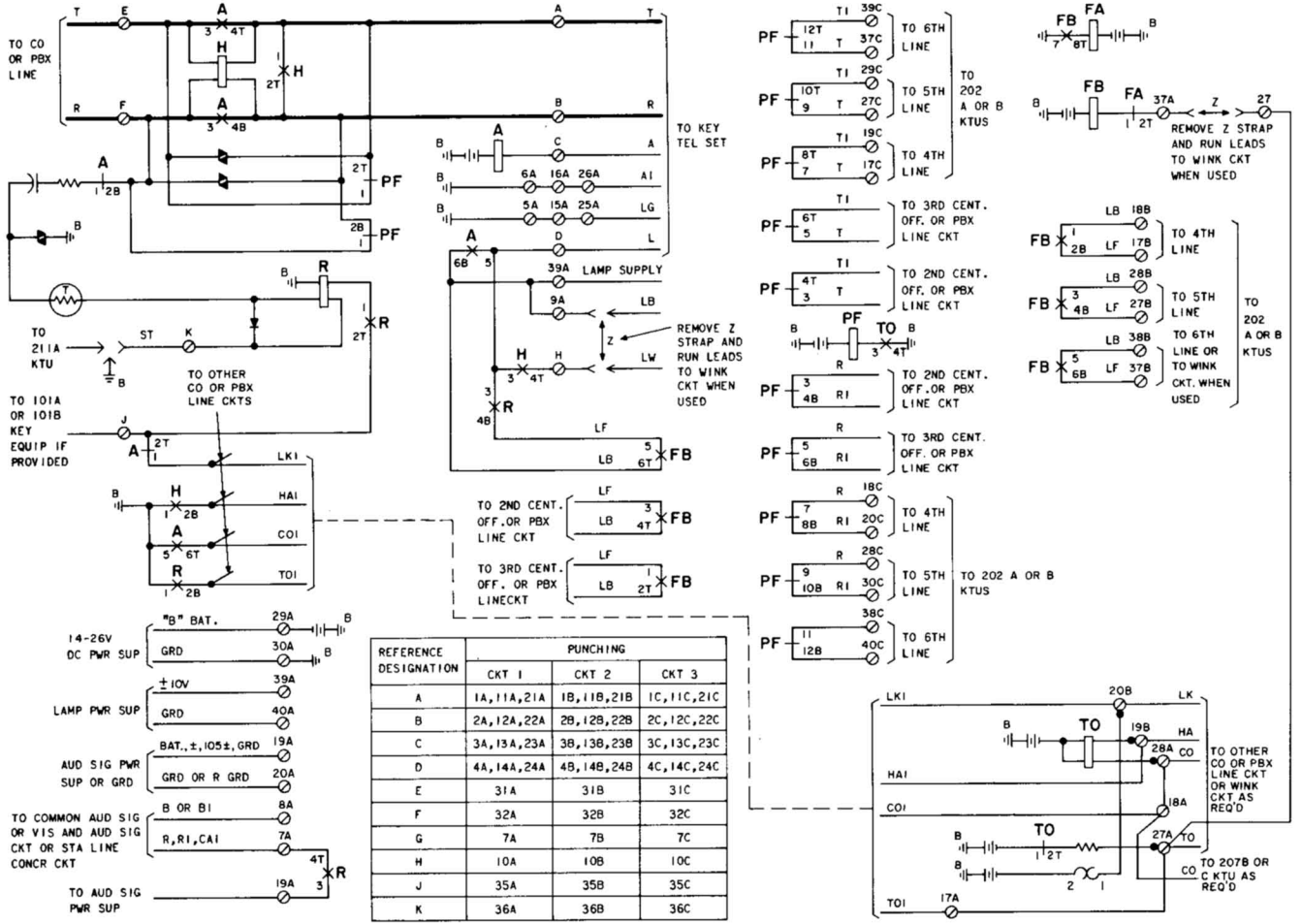

REFERENCE DESIGNATION	PUNCHING		
	CKT 1	CKT 2	CKT 3
A	1A,11A,21A	1B,11B,21B	1C,11C,21C
B	2A,12A,22A	2B,12B,22B	2C,12C,22C
C	3A,13A,23A	3B,13B,23B	3C,13C,23C
D	4A,14A,24A	4B,14B,24B	4C,14C,24C
E	31A	31B	31C
F	32A	32B	32C
G	7A	7B	7C
H	10A	10B	10C
J	35A	35B	35C
K	36A	36B	36C

Fig. 13—Functional Schematic of 212A KTU (MD) (CO or PBX Line Circuit With Lamp Flashing and Incoming Signal Time-Out Circuits)

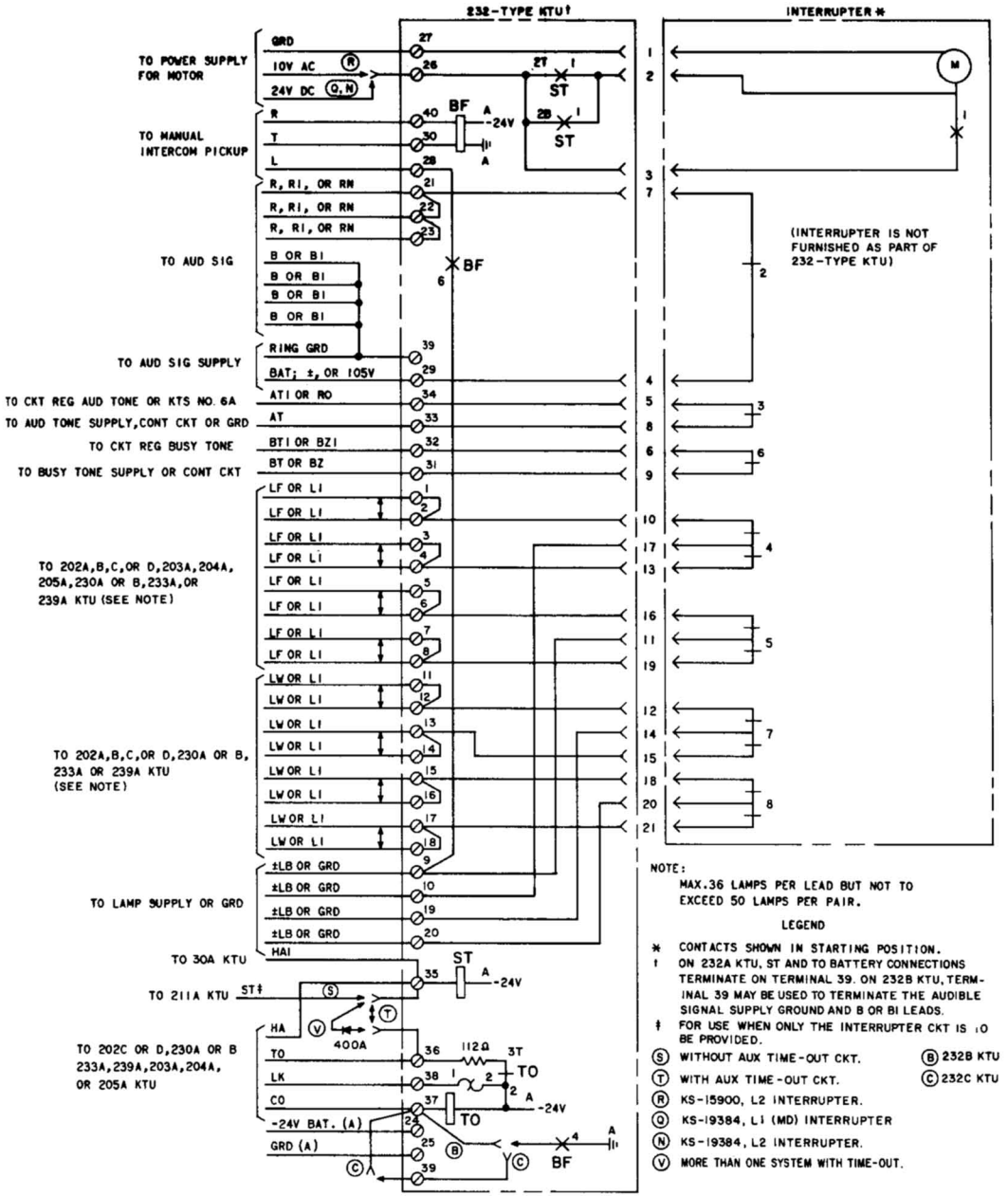

Fig. 14—Functional Sshematic of 232-TYPE KTU (Electro-Mechanical Flash, Wink, Ring, and Time-Out Circuit)

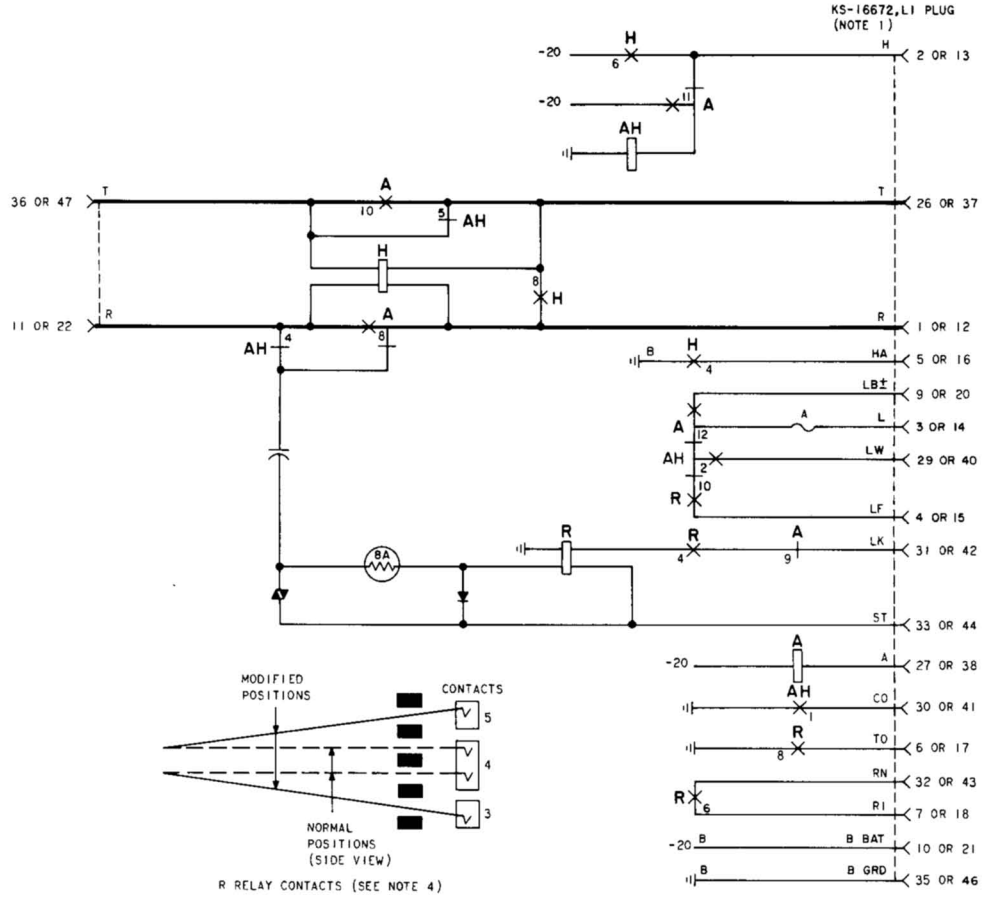

NOTES:

1. TERMINALS 1 TO 11 AND 26 TO 36 ARE FOR ODD NUMBERED CIRCUITS. TERMINALS 12 TO 22 AND 37 TO 41 ARE FOR EVEN NUMBERED CIRCUITS.
2. THE POWER SUPPLY LEADS AND THE LEADS TO THE CENTRAL OFFICE OR PBX LINE ARE CONNECTED TO THE TERMINALS OF THE PLUG AS SHOWN BELOW:

	LEAD	CIRCUITS	
		1-3-5-7-9	2-4-6-8-10
CO OR PBX	T	36	47
	R	11	22
LAMP SUPPLY	GRD		
	± OR BAT.	9	20
BAT. SUPPLY	GRD	35	46
	-20	10	21

3. EACH PLUG PROVIDES LEADS FOR TWO LINE CIRCUITS WHICH ARE ARRANGED ACCORDING TO THE FOLLOWING TABLE:

	PLUG				
	A	B	C	D	E
ODD CIRCUITS	1	3	5	7	9
EVEN CIRCUITS	2	4	6	8	10

4. FOR NONLOCKING OPERATION OF R RELAY, MOVE THE UPPER WIRE SPRING CONTACT FROM ITS GUIDE IN CONTACT POSITION 4 TO THE LOWER GUIDE OF CONTACT POSITION 5. MOVE THE LOWER WIRE SPRING CONTACT FROM ITS GUIDE IN CONTACT POSITION 4 TO THE UPPER GUIDE OF CONTACT 3. CONTACT POSITIONS 3 AND 5 ARE UNEQUIPPED AND THE STATIONARY CONTACTS UNWIRED.

Fig. 15—Functional Schematic of 233A KTU (MD) (CO or PBX Line Circuit) (Sheet 1 of 2)

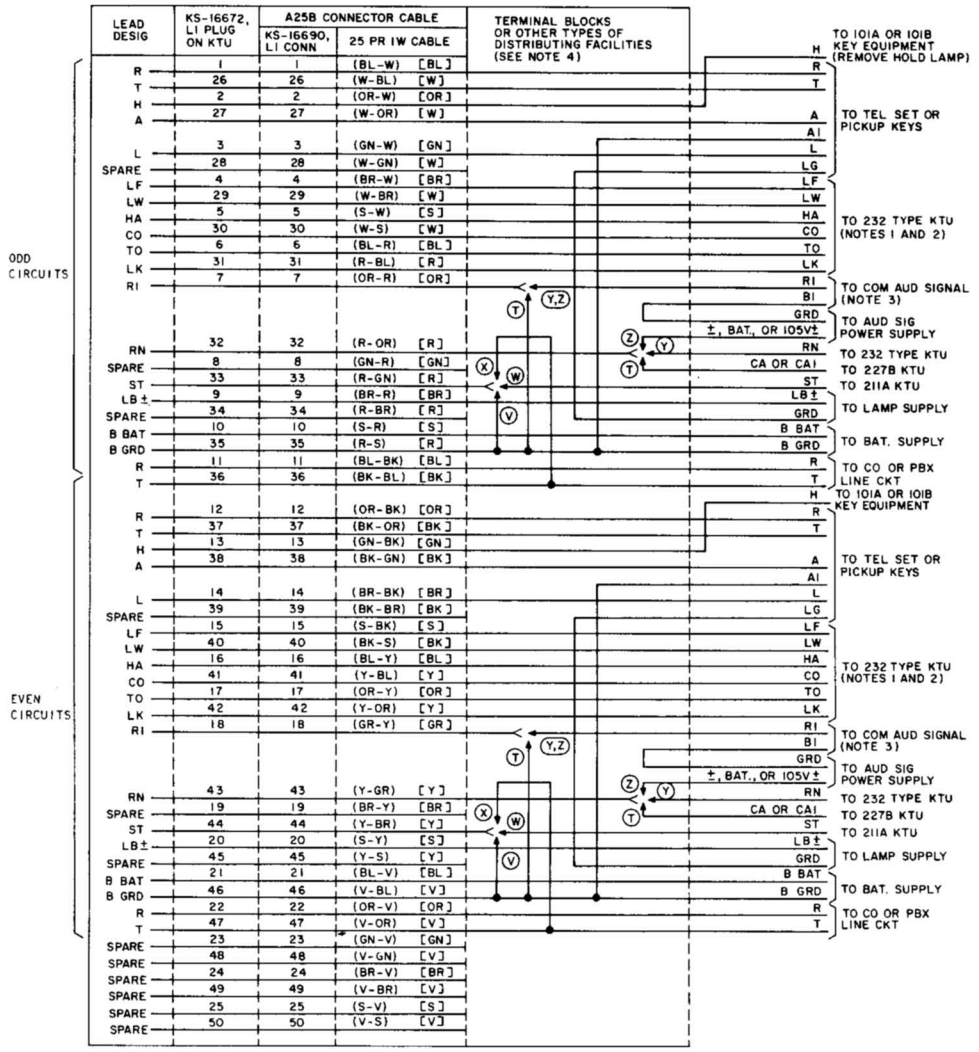

NOTES:
1. LF LEADS MAY BE STRAPPED NOT TO EXCEED 50 LAMPS PER GROUP.
2. LW LEADS MAY BE STRAPPED NOT TO EXCEED 50 LAMPS PER GROUP.
3. FOR COMMON AUDIBLE SIGNAL WITH Z OR Y OPTION, STRAP ALL RI LEADS.
4. THE TYPE OF TERMINATING EQUIPMENT TO BE USED, SUCH AS 30- OR 66-TYPE CONNECTING BLOCKS, BUNCH BLOCKS, DISTRIBUTION FRAME, ETC, WILL BE GOVERNED BY THE SIZE AND NEEDS OF A PARTICULAR INSTALLATION.

( ) CURRENT COLOR CODE
[ ] MD COLOR CODE

CIRCUIT NOTES

FEATURE OR OPTION			APP OR WIR
LINE RINGING CIRCUIT	METALLIC		X
	GROUNDED		V
		COM AUD CONTROL RELAY PROVIDED	W
COMMON AUDIBLE	INTERRUPTED RINGING	INTERRUPTER	Y
		COM AUD CONTROL RELAY PROVIDED	T
	STEADY RINGING		Z

Fig. 15—Functional Schematic of 233A KTU (MD) (CO or PBX Line Circuit) (Sheet 2 of 2)

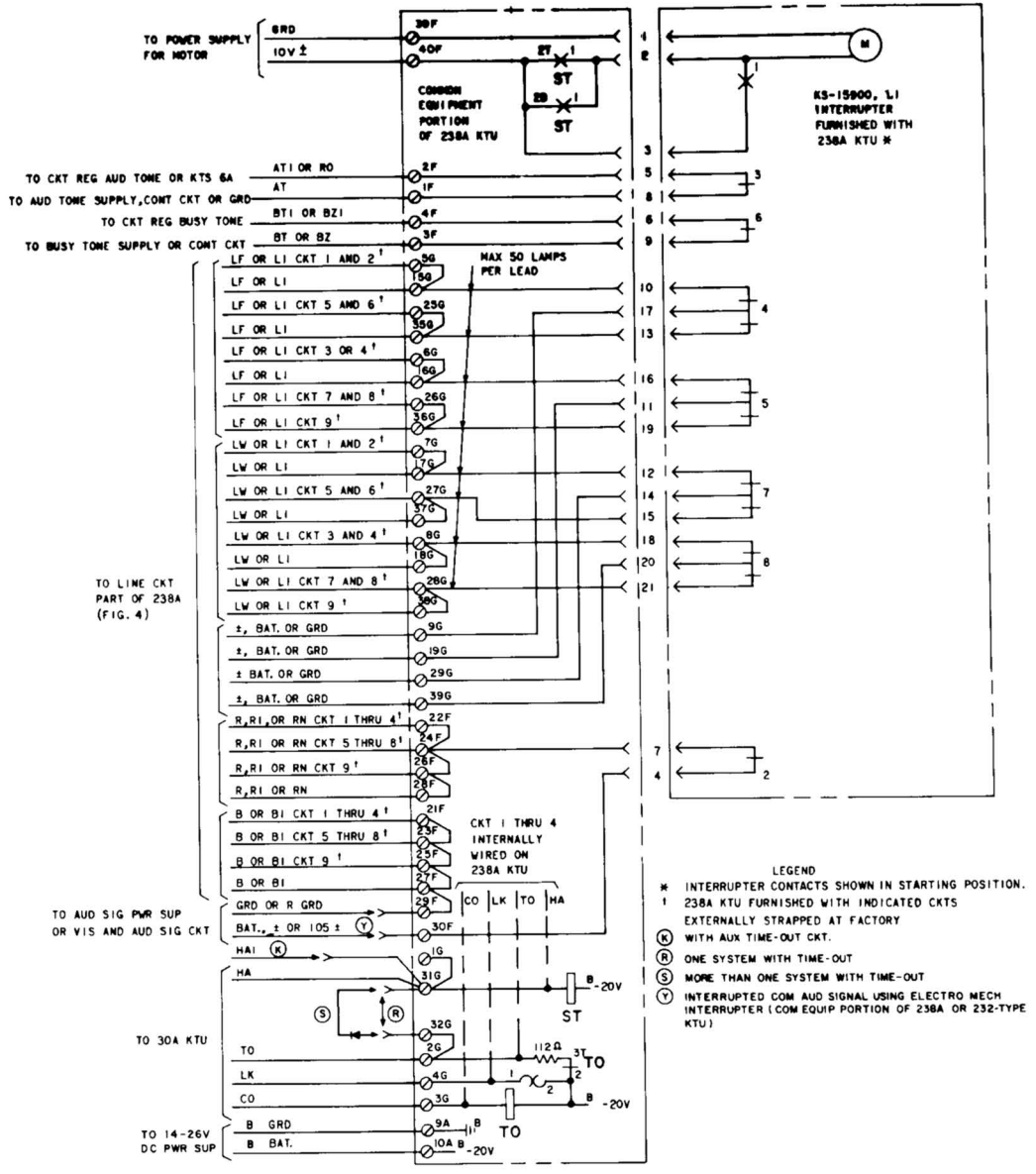

Fig. 16—Functional Schematic of 238A KTU (CO or PBX Line Circuit)

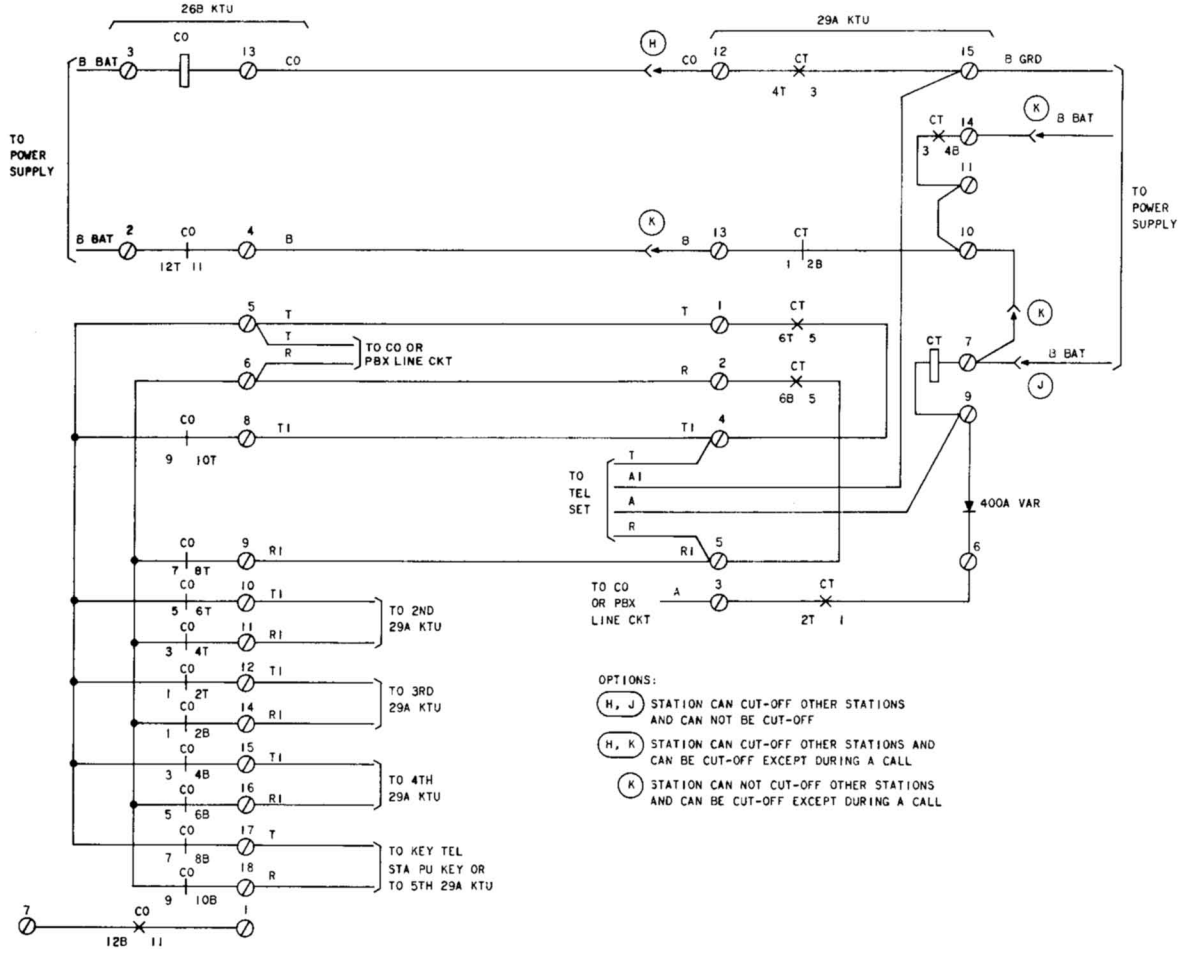

Fig. 17—Functional Schematic of 26B KTU (Automatic Cutoff Circuit) and 29A KTU (Cut Through Relay Circuit)

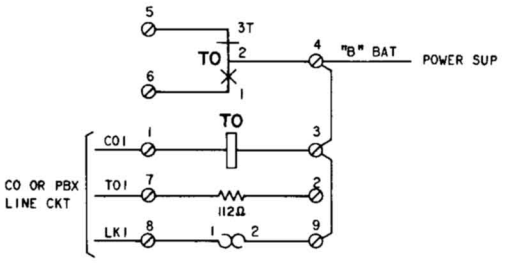

Fig. 18—Functional Schematic of 30A KTU (Time-Out Circuit)

REPLACING PAGE ADDENDUM
Filing Instructions:

1. REMOVE FROM THE SECTION THE PAGES NUMBERED THE SAME AS THOSE ATTACHED TO THIS PINK SHEET.
2. INSERT THE ATTACHED PAGES INTO THE SECTION IN THEIR PLACE.
3. PLACE THIS PINK SHEET AHEAD OF PAGE 1 OF THE SECTION.

ADDENDUM 518-114-115
Issue 1, May 1971

REFERENCE

1A1 KEY TELEPHONE SYSTEM

PACKAGED KEY TELEPHONE UNITS

1. GENERAL

1.001 This addendum supplements Section 518-114-115, Issue 1. The attached pages must be inserted in the section in accordance with filing instructions above.

1.002 This addendum is issued to correct connection points of the 225A KTU in the block diagram on Fig. 7.

Attached:

Page 7 dated May 1971, reissued
Page 8 dated May 1971, revised

2. IDENTIFICATION

The following change applies to Part 2 of the section:

(a) Fig. 7—revised

American Telephone and Telegraph Company, 1971
Printed in U.S.A.

SEE ADDENDUM

REFERENCE

1A1 KEY TELEPHONE SYSTEM

PACKAGED KEY TELEPHONE UNITS

1. GENERAL

1.01 This section combines identification information for the 200F (MD), 200G (MD), 200H, and 200K (MD) packaged KTUs formerly contained in Sections 518-210-100, 518-210-400, 518-210-401, 518-210-402, and 518-210-403, which are hereby canceled.

2. IDENTIFICATION

2.01 The 200F, G, and K packages provide the basic requirements for 1A1 and 6A (selector only) Key Telephone System installations. The 200H packaged units provide for the 2-talking link 6A Key Telephone System.

2.02 The basic differences in these packages are the capacities of the apparatus mountings. The 200F, G, and K packages are equipped with a 232B KTU with a KS-15900 List 1 interrupter, which provides for flashing and winking lamps, interrupted audible signal, time-out, and manual intercom.

2.03 A 232A (MD) or 232B KTU is furnished with each 200H-type KTU, but the KS-15900, List 1 or KS-19384, List 2 interrupter is not furnished, and if required must be ordered separately. All leads associated with the 232-type KTU are accessible at the terminal panel when a 64B1-100 cable terminal is provided.

2.04 The dc and ac power supply may be provided by a J86471B, List 1 power unit. Direct current, 20 to 26 volts, may be supplied from local or building battery. Power supply for lamps may be supplied by a 393A (MD) or 393B transformer; ringing supply may be over a pair of leads from CO, PBX, or J86731C, List 1 power plant [107C (MD) or 107D frequency generator].

2.05 When the 200F, G, H, and K-type KTUs are used in conjunction with other key systems, the J86731B, List 1 power plant may be required for the lamp supply. This is provided with the 200K-type KTU only, and must be ordered separately for the 200F, G, and H type KTU's. The 10-volt capacity of the power plant is four hundred twenty-five 51A lamps.

2.06 The 29C1 or 30C1 power units may also be used to furnish power for the 200H KTU. For information covering their use refer to 167 Division.

2.07 Fuse requirements for the 200H KTU are as follows:

DESIG	AMP	POTENTIAL FUSED VOLTS	QUANTITY
A Bat.	2	-20 to -26 tlk bat.	One per system
B Bat.	2	-20 to -26 sig bat.	

2.08 When one or more telephone stations associated with these packaged KTUs are equipped with a TOUCH-TONE® dial, a 247A (MD) or 247B KTU must be ordered separately and mounted externally to the apparatus mounting if space is not available.

Ordering Guide

2.09 A description of the KTU ordering codes, service and features, apparatus mountings, and cable terminals is shown in Table A.

2.10 When the 64A1-50 cable terminal is equipped with a 15-foot tail, designation strips preprinted with the feature layout for 200F- and 200K-type KTUs are furnished. Two additional blank strips are furnished for field changes.

© American Telephone and Telegraph Company, 1970
Printed in U.S.A.

TABLE A

1A1 PACKAGED KEY TELEPHONE UNITS

KEY UNIT CODES (SEE NOTE)	KEY TELEPHONE UNITS AND SERVICE FEATURES								APPARATUS MOUNTING	CABLE TERMINAL (PROVIDED WHEN LETTER C IS ADDED TO CODE) (SEE NOTE)
	230A OR B KTU PICKUP AND HOLD 4 CO OR PBX LINE	202C OR D KTU PICKUP AND HOLD 1 CO OR PBX LINE	232A OR B WITH KS-15900, LIST 1 INTERRUPTER, FLASH, WINK, TIME-OUT, AND MAN. INTERCOM	207C 9-STA DIAL SELECTIVE INTERCOM	222A KTU	223A KTU	224A (MD) OR B KTU	216A KTU		
200F4	1		1						31A apparatus mounting 116A cover 173B back-board	64A1-50 cable terminal (1-GC52 terminal box 2-31D connecting blocks, 50-pr cable, with 8-ft tail)
200F4D	1		1	1						
200F5 (Fig. 1)	1	1	1							
200F6	1	2	1							
200G4	1		1						26A apparatus mounting	64B1-75 cable terminal (1-terminal plate assembly per ED-69366-50, group 3, 75-pr cable with 8-ft tail)
200G4D	1		1	1						
200G5	1	1	1							
200G5D	1	1	1	1						
200G6	1	2	1							
200G6D	1	2	1	1						
200G7	1	3	1							
200G7D	1	4	1	1						
200G8 (Fig. 2)	2		1							
	1	4								
200G9	2	1	1							
	1	5								
200K4 (Fig. 4)	1		1						16A apparatus mounting 117A cover	64A1-50 cable terminal (1-GC52 terminal box, 2-31D connecting blocks, 50-pr cable with 8-ft tail)
200K4D	1		1	1						
200K5	1	1	1							
200K5D	1	1	1	1						
200K6	1	2	1							
200K6D	1	2	1	1						
200K7	1	3	1							
200K7D	1	3	1	1						
200H15D (Fig. 3)			1*	1	1	2	1	1	26A apparatus mounting	64B1-100 cable terminal (1-terminal plate assembly per ED-69366-50, group 3, 100-pr cable with 15-ft tail)
200H18D			1*	1	1	3	1	1		

* The KS-15900, List 1 interrupter must be ordered separately.

200K-type KTUs are furnished with the J86731, List 1 power plant.

Note: The 200F, 200G, and 200K KTUs and the 64A1-50 terminal box are rated (MD).

2.11 These pressure-sensitive tapes are designated as:

- Forms E-4842 and E-4843 which consist of two dual strips preprinted to conform to the layout of the 200F- and 200K-type KTUs, respectively
- Form E-4848 which consist of four blank strips to be marked as necessary to fit the need.

DESIGN FEATURES

2.12 ***200F-Type KTU*** (Fig. 1) provides:

- Pickup and hold on four to six CO or PBX lines, or
- Pickup and hold on four CO or PBX Lines with a 9-station dial selective intercom circuit.

Fig. 5 shows the arrangement, coding (without cable terminal), and KTUs used in the 200F-type KTU.

2.13 ***200G-Type KTU*** (Fig. 2) provides:

- Pickup and hold on four to nine CO or PBX Lines, or
- Pickup and hold on four to eight CO or PBX Lines with 9-station dial selective intercom circuit.

Fig. 6 shows the arrangement, coding (without cable terminal), and KTUs used in the 200G-type KTU.

2.14 ***200H-Type KTU*** (Fig. 3) provides:

- Intercommunication facilities for a maximum of 18 codes
- A primary and secondary talking link which enables a system to carry two simultaneous and independent conversations.
- Camp-on. The 224B KTU permits the camp-on station to cut through when the primary or secondary link becomes available.
- A busy tone to the station originating camp-on and to any other stations which may try to originate a call after the system has been camped on.
- Automatic cutoff.

Fig. 7 shows the arrangement, coding (without cable terminals), and KTUs used in the 200H-type KTU.

2.15 ***200K-Type KTU*** (Fig. 4) provides:

- Pickup and hold on four to seven CO or PBX Lines with or without a 9-station dial selective intercom circuit
- J86731D, List 1 Power Plant

Fig. 8 shows the arrangement, coding (without cable terminal), and KTUs used in the 200K-type KTU.

2.16 Refer to Division 518, sections entitled "Service, 1A1, 200F, G, and K Packaged Units" and "Service, 1A1, 200H Packaged Units" for connections.

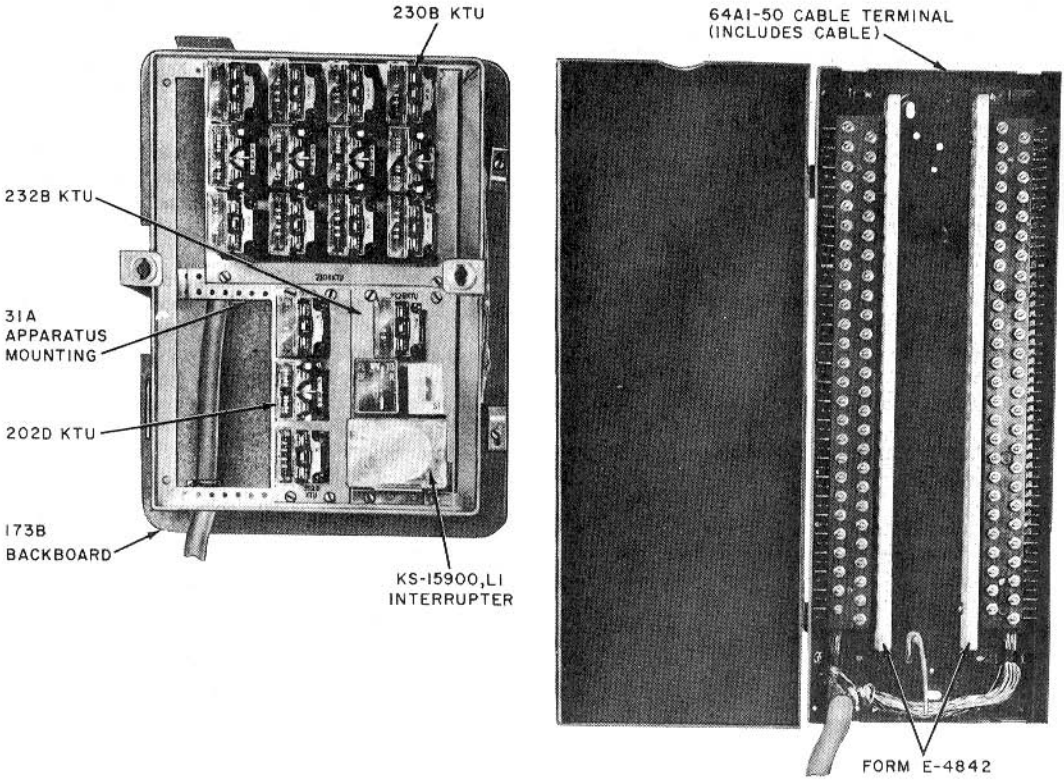

Fig. 1—200F5C KTU (Without Cover)

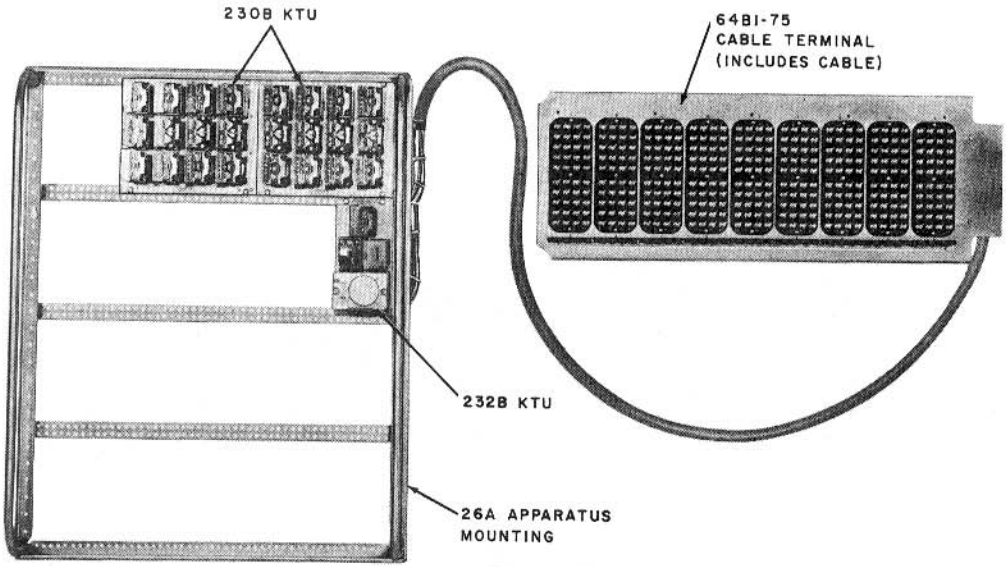

Fig. 2—200G8C KTU

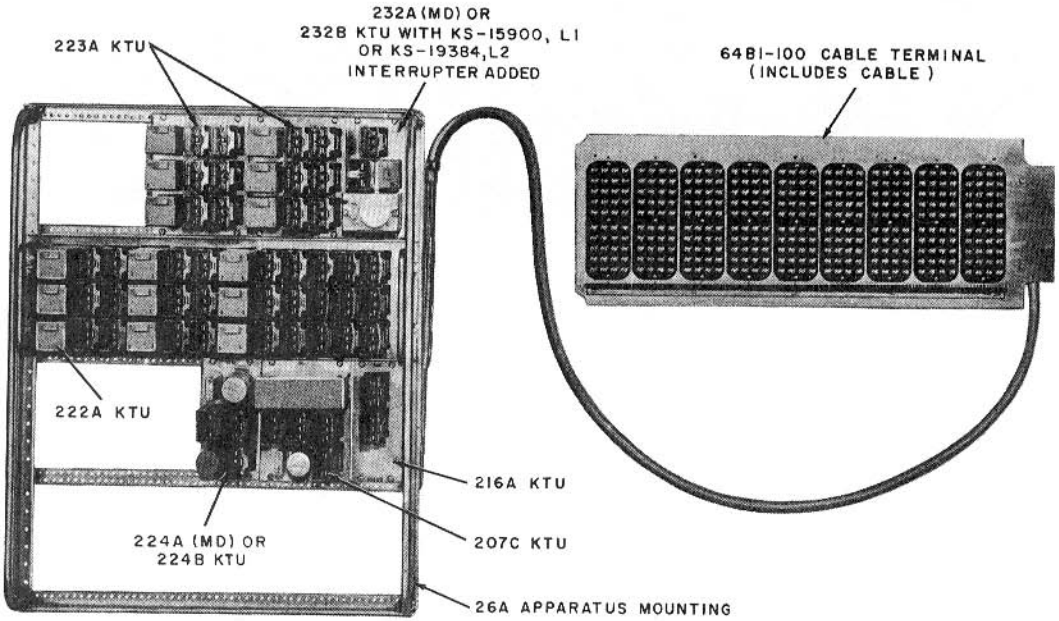

Fig. 3—200H15DC KTU

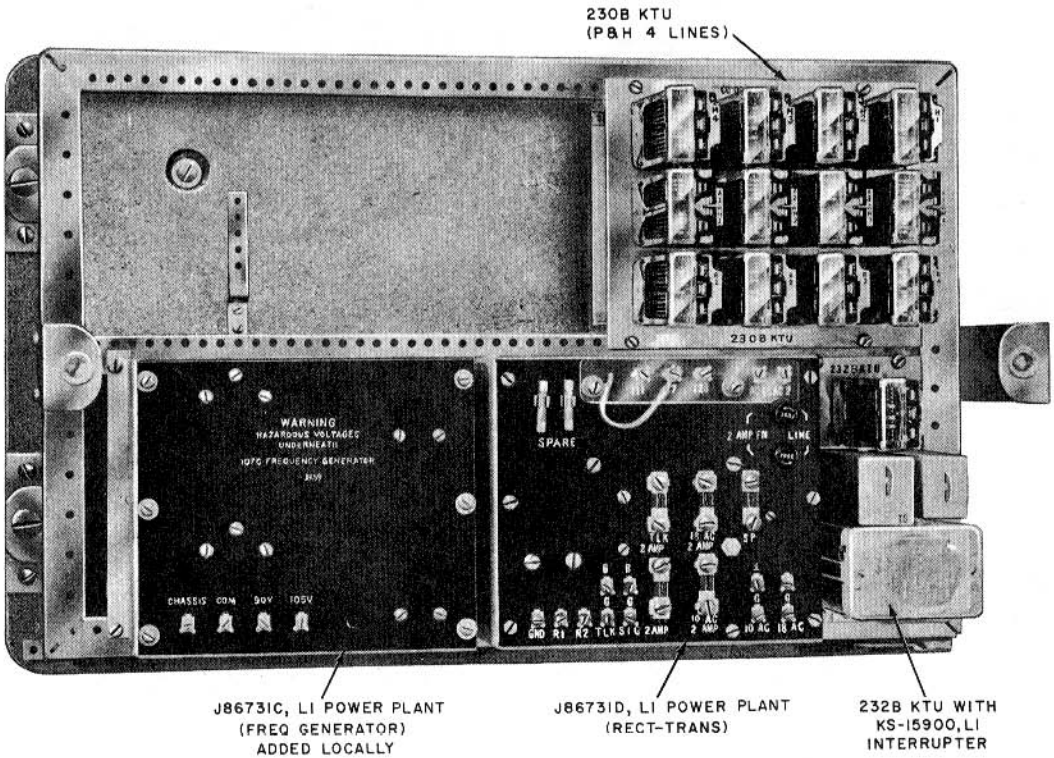

Fig. 4—200K4 KTU (Without Cover)

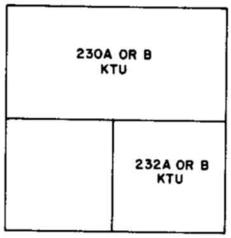

200F4

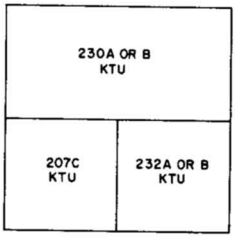

200F4D

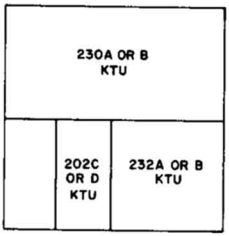

200F5

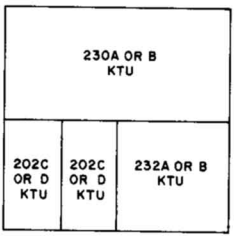

200F6

Fig. 5—200F-Type KTU, Arrangements

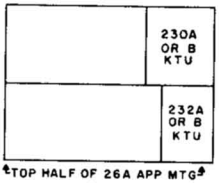

200G4

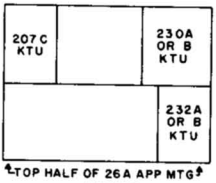

200G4D

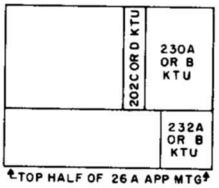

200G5

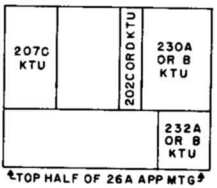

200G5D

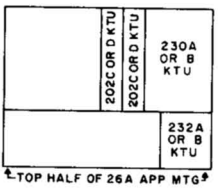

200G6

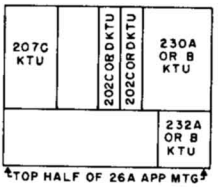

200G6D

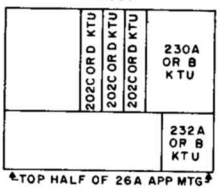

200G7

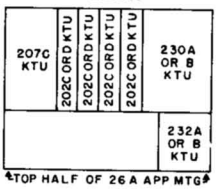

200G7D

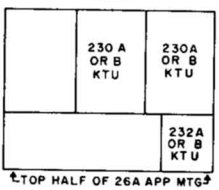

200G8

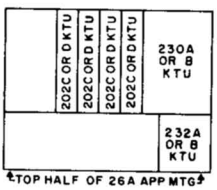

200G8

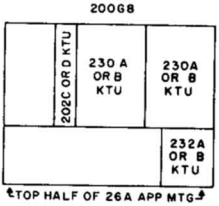

200G9

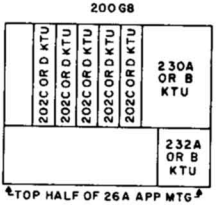

200G9

Fig. 6—200G-Type KTU, Arrangements

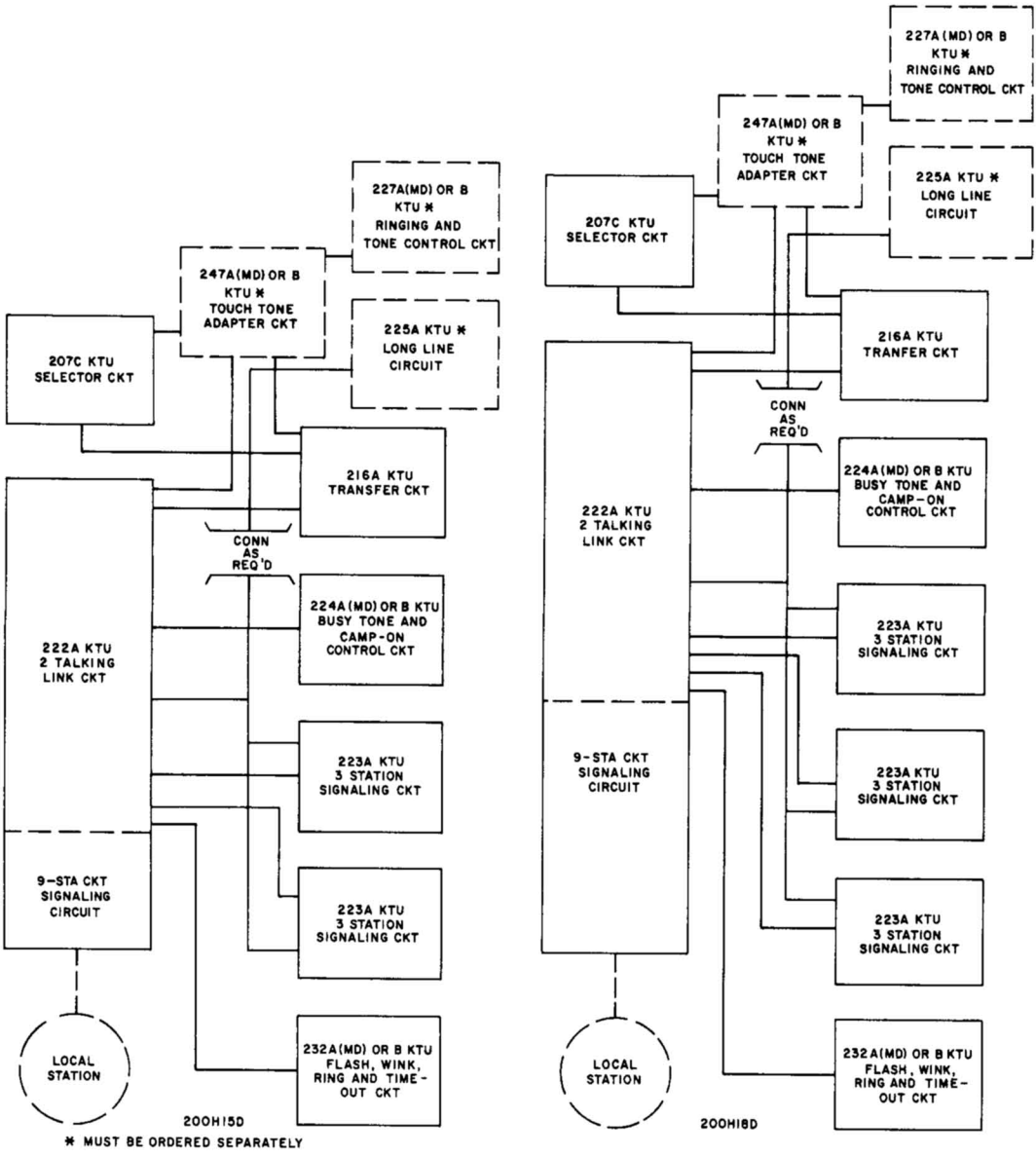

Fig. 7—200H-Type KTU, Arrangements

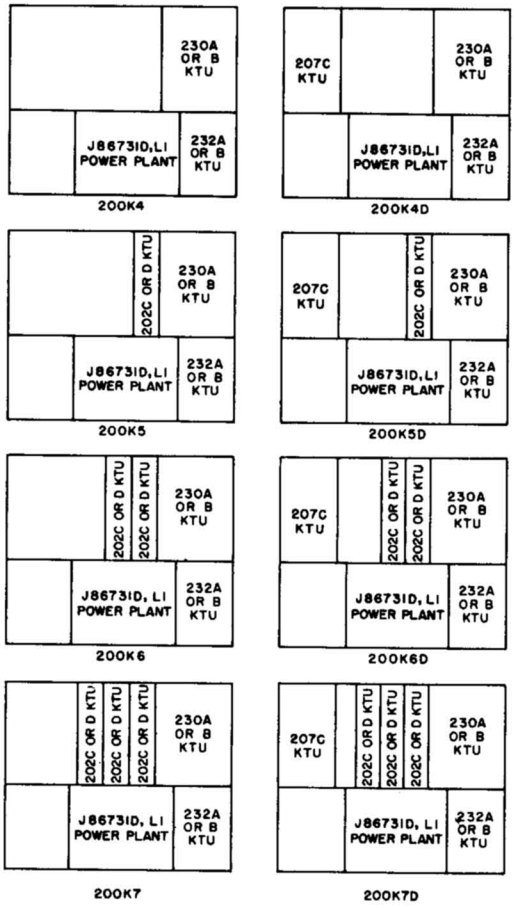

Fig. 8—200K-Type KTU, Arrangements

REFERENCE

1A1 KEY TELEPHONE SYSTEM

"TOUCH-TONE®" ADAPTERS

1. GENERAL

1.01 This section is reissued to change relay designation H3 to L3 for digit 8 in Table A.

1.02 This issue of the section is based on the following drawings:

- SD-69529-01 Issue 6 (247B KTU)
- SD-69447-01 Issue 4 (247A KTU (MD))

If this section is to be used with equipment or apparatus reflecting later issues of the drawings, reference should be made to the SDs and CDs to determine the extent of the changes and the manner in which the section may be affected.

2. IDENTIFICATION

(a) ***Purpose***

To convert TOUCH-TONE® signals to relay closures compatible with dial pulse communication systems.

(b) ***Application***

- 2A Communication System
- 6A Key Telephone System

(c) ***Ordering Guide***

- Unit, Telephone, Key 247B (Fig. 1, 2, and 3)
- Unit, Telephone, Key 247A (MD) (Fig. 4 and 5)

Replaceable Components for the 247B

- Pack, Circuit Y1 thru Y5 (ordered individually)

Replaceable Components for the 247A

- P48F439 Printed Wiring Board Assembly (PC1)
- P48F442 Printed Wiring Board Assembly (PC2)
- P48F445 Printed Wiring Board Assembly (PC3)

(d) ***Design Features***

247B

- No installation adjustments required
- Replaceable circuit packs
- Responds only to valid TOUCH-TONE signals

247A

- Initial installation adjustments required
- Replaceable printed wiring boards
- Time-out circuit (with warning tone) to prevent false operation.

3. INSTALLATION

3.01 Where possible, install adjacent to 207-type KTU in standard apparatus cabinets, relay racks, or panels used for 200-type KTUs.

© American Telephone and Telegraph Company, 1971
Printed in U.S.A.



Before placing 247A KTU in service adjust H and L relays. (See 3.04).

3.02 Power, 20-26 volts dc, must be provided from the associated system.

3.03 Handling of 247A KTUs may result in damage to wire spring relays. After mounting, visually inspect all wire spring relays for:

- Improper position of contact springs
- Broken cards
- Improper position of cards.

3.04 General information for adjusting H and L bias potentiometers is as follows:

(a) Rotating H or L bias potentiometer in the counterclockwise direction will decrease sensitivity of the circuit to a point where the relays will operate slowly or not at all. Rotating the potentiometers in the clockwise direction will increase sensitivity of the circuit to a point where more than one relay in the H or L group will operate from the same frequency.

(b) Depressing two adjacent horizontal dial buttons at the same time will only produce the low frequency tone for that horizontal row. Rows from top to bottom operate L1, L2, L3, and L4 relays, respectively.

(c) Depressing two adjacent vertical dial buttons at the same time will only produce the high frequency tone for that row. Rows from left to right operate H1, H2, and H3 relays, respectively.

3.05 Procedure for adjusting H and L relay operation is as follows:

(a) Connect a telephone set equipped with a 12-button TOUCH-TONE dial to any convenient T and R terminals associated with TOUCH-TONE dial stations, so that the 247A KTU can be observed while operating dial buttons.

Note: On 2-talking link arrangements of the 6A Key Telephone System, the second link must be made busy.

(b) Block TOA relay operated to prevent time-out.

(c) Adjust L relay as follows:

(1) Remove handset

(2) Depress any two adjacent horizontal dial buttons in the top row.

(3) Adjust L bias potentiometer counterclockwise until L1 relay fails to operate.

(4) Readjust potentiometer clockwise until only L1 relay operates properly.

(5) Now successively depress two adjacent horizontal dial buttons in the other rows to observe the operation of L2, L3, and L4 relays. Readjust L bias potentiometer if necessary according to (3) and (4).

Note: If readjustment is necessary, repeat tests for all L relays.

(d) Adjust H relay as follows.

(1) Follow same procedure as for L relay except that two adjacent vertical dial buttons are depressed and H bias potentiometer is adjusted.

(e) Operate each dial key individually, observing that the proper H and L relay combination is operating according to Table A. If necessary readjust the bias potentiometers.

(f) Remove blocking tool from TOA relay.

(g) Initiate several test calls to make sure that signaling occurs at the selected station.

(h) Remove telephone set used for tests from the line.

3.06 To check the time-out feature, remove the handset of a TOUCH-TONE dial station and observe the time it takes to receive the interrupted warning tone. This should occur in 5 to 10 seconds.

TABLE A

DIGIT SEQUENCE

DIGIT	FREQUENCIES TRANSMITTED	RELAYS OPERATED
1	1209 & 697	H1, L1
2	1336 & 697	H2, L1
3	1477 & 697	H3, L1
4	1209 & 770	H1, L2
5	1336 & 770	H2, L2
6	1477 & 770	H3, L2
7	1209 & 852	H1, L3
8	1336 & 852	H2, L3
9	1477 & 852	H3, L3
0	1336 & 941	H2, L4

Note: All high frequencies ±2 cps; all low frequencies ±1 cps.

4. CONNECTIONS

4.01 For connections refer to Section 512-534-400 for 2A Communication System (Business Interphone) and to Sections 518-410-400, 518-410-401, or 518-410-402 for Selector-Only Arrangement, Single-Talking Link Arrangement and Two-Talking Link Arrangements, respectively.

5. MAINTENANCE

247B KTU

5.01 Maintenance is limited to replacement of circuit packs.

5.02 To replace circuit packs (Fig. 3):

(1) Loosen and swing open retaining strap.

(2) Grasp D-ring and pull straight out of unit.

(3) Align replacement with top and bottom slides and push forward until seated in connector.

(4) Refasten retaining strap making sure all circuit packs are fully seated.

247A KTU

5.03 Maintenance should be limited to the following:

(a) Checking relay portion of unit

Note: When checking relay portion of unit, all three printed board assemblies must be removed from unit to prevent possible damage to transistors.

(b) Replacing of defective printed board assemblies.

(c) Adjusting H and L bias potentiometers for Proper operation of H and L relays.

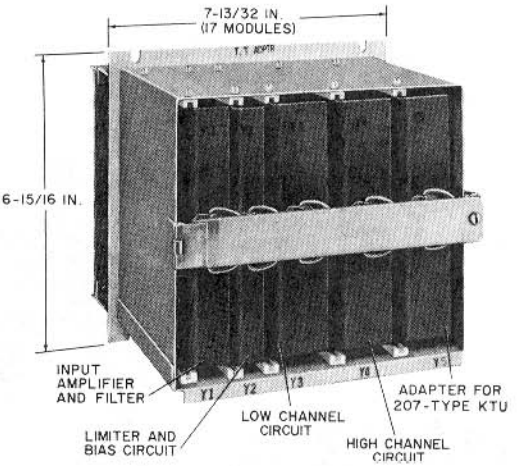

Fig. 1—247B KTU, Front View

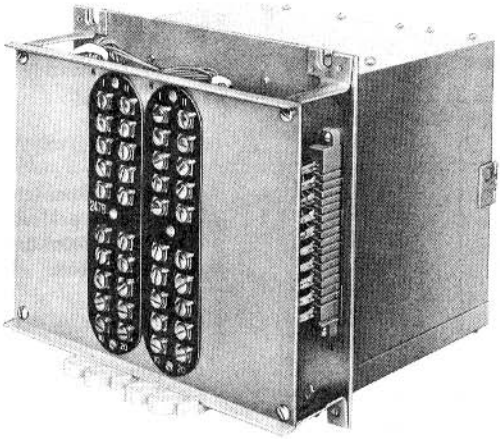

Fig. 2—247B KTU, Rear View

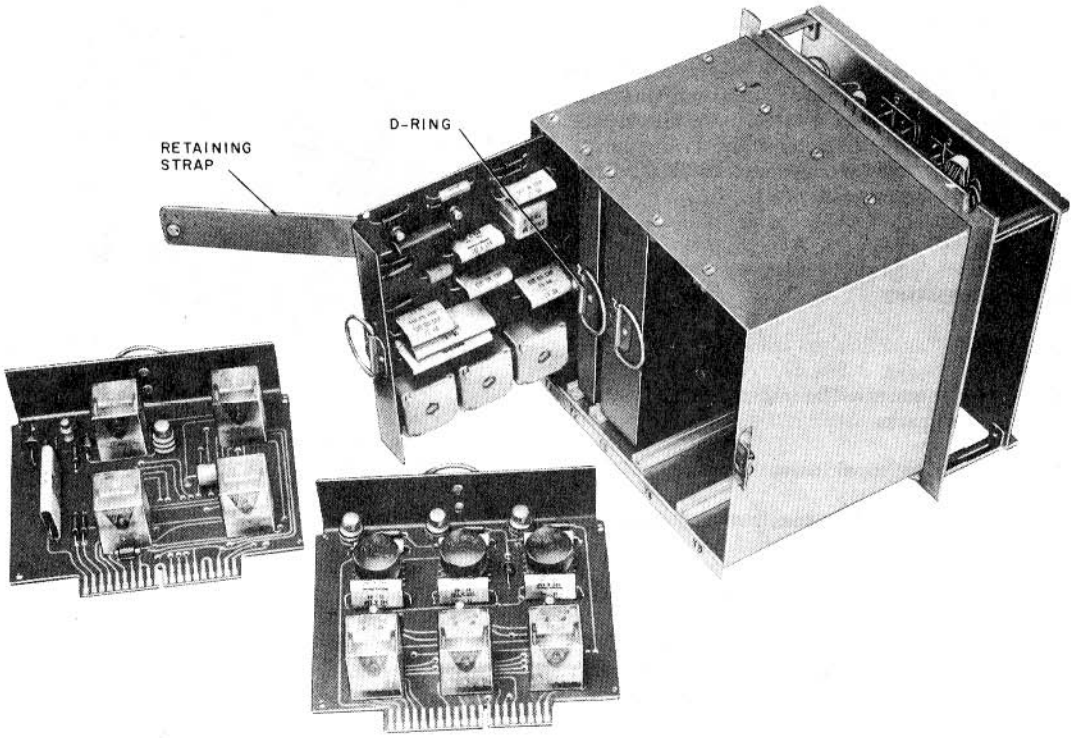

Fig. 3—247B KTU, Circuit Pack Removal

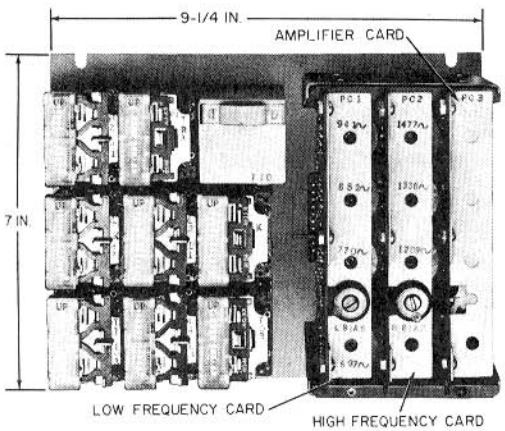

Fig. 4—247A KTU TOUCH-TONE Adapter, Front View

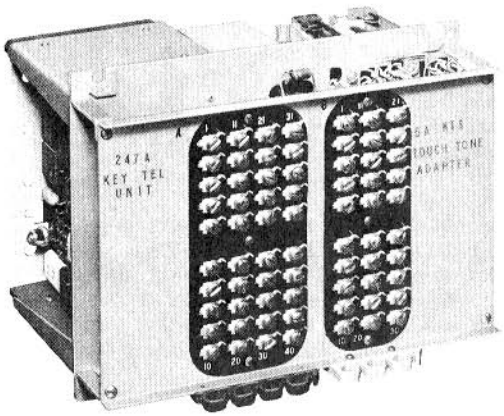

Fig. 5—247A KTU TOUCH-TONE Adapter, Rear View

SERVICE

1A1 KEY TELEPHONE SYSTEM

KEY TELEPHONE UNITS

1. GENERAL

1.01 This section provides connection information for 1A1 Key Telephone System arrangements.

1.02 This section is reissued to revise Fig. 5, 6, 9, 12, 14, 16, and 17.

1.03 This issue of the section is based on the following drawings:

SD-69203-01, Issue 7

SD-69270-01, Issue 4

SD-69286-01, Issue 8

SD-69288-01, Issue 17

SD-69294-01, Issue 6

If this section is to be used with equipment or apparatus reflecting later issues of the drawings, reference should be made to the SD's to determine the extent of the changes and the manner in which the section may be affected.

1.04 Refer to Section 518-114-110 for functional schematics of KTUs covered in this section.

2. CONNECTION INDEX

Connections for CO or PBX Line Circuit

Fig. 1—202A, B, C, D KTUs with 209A and 210A KTUs for Line Pickup and Hold, Line and Busy Lamps, Metallic or Grounded Ringing, Timeout, Lamp Wink, and Power Failure

Fig. 2—230A or B KTUs with 209A and 210A KTUs for Line Pickup and Hold, Line and Busy Lamps, Metallic or Grounded Ringing, Timeout, and Lamp Wink

Fig. 3—203A B, C or D and 212A KTUs with 210A and 227B KTUs for Line Pickup and Hold, Line and Busy Lamps, Common Audible Signal, Timeout, Lamp Wink, and Power Failure

Fig. 4—238A KTU with 30A and 227B KTUs for Line Pickup and Hold, Line and Busy Lamps, Interrupted Audible Signals, Common Audible Signals, Auxiliary Timeout, and Lamp Wink

Fig. 5—202C or D, or 230A or B KTUs with 232-Type, 30A and 227B KTUs for Line Pickup and Hold, Line and Busy Lamps, Interrupted Audible Signals, Common Audible Signals, Auxiliary Timeout, Lamp Wink, and Manual Intercom

Fig. 6—239A KTU with 232-Type, 30A, and 227B KTUs for Line Pickup and Hold, Line and Busy Lamps, Interrupted Audible Signals, Common Audible Signals, Auxiliary Timeout, Lamp Wink, and Manual Intercom

Fig. 7—202C or D, or 230A or B KTUs with 209A and 210A KTUs for Line Pickup and Hold, Line and Busy Lamps, Common Audible Signals, Lamp Wink, and Timeout

Fig. 8—202C or D with 210A KTU and only the Common Equipment Part of 212A KTU for Line Pickup and Hold, Line and Busy Lamps, Common Audible Signals, Lamp Wink, and Timeout

Fig. 9—233A KTU with 227B and 232-Type KTUs for Line Pickup and Hold, Line and Busy Lamps, Interrupted Audible Signals, Lamp Wink, Manual Intercom, and Timeout

© American Telephone and Telegraph Company, 1974
Printed in U.S.A.

Miscellaneous Connections

Fig. 10—Automatic Tie Line (203A KTU) or Ringdown Tie Line Circuit (204A KTU) or Station Line Circuit (205A KTU) with 209A and 211A KTUs for Steady Common Audible Signals, Line and Busy Lamps, and Timeout

Fig. 11—Automatic Tie Line (203A KTU) or Ringdown Tie Line Circuit (204A KTU) or Station Line Circuit (205A KTU) with 211A KTU and only the Common Equipment Part of 212A KTU for Steady Audible or Common Audible Signals, Line and Busy Lamps, and Timeout

Fig. 12—Automatic Tie Line Circuit (203A KTU) or Ringdown Tie Line Circuit (204A KTU) or Station Line Circuit (205A KTU) with 227B and 232-Type KTUs for Interrupted Audible or Common Audible Signals, Line and Busy Lamps, Lamp Wink, and Timeout

Fig. 13—Automatic Tie Line Circuit (203A KTU) or Ringdown Tie Line Circuit (204A KTU) or Station Line Circuit (205A KTU) with only the Common Equipment Part of 238A KTU and 227B KTU for Interrupted Audible or Common Audible Signals, Line and Busy Lamps, Lamp Wink, and Timeout

Fig. 14—Dial Selective Intercom Circuit (207A, B, or C KTU) with 208A and 209A KTUs and only the Common Equipment Part of 212A KTU for Flashing Line Lamps, Busy Lamps, Audible Signals, and Timeout

Fig. 15—Manual Cutoff Circuit (29A KTU) with 202A, B, C, or D, 212A, 230A or B, 233A, 238A, 239A, 203A, 204A, and 205A KTUs

Fig. 16—Cut-Through and Control Circuit for Automatic Cutoff (26B and 29A KTUs) with 202A, B, C, or D, 212A, 230A or B, 233A, 238A, 239A, 203A, 204A, and 205A KTUs.

Fig. 17—Dial Selective Intercom Circuit (207A, B, or C KTU) with Busy Lamps and Audible Signals.

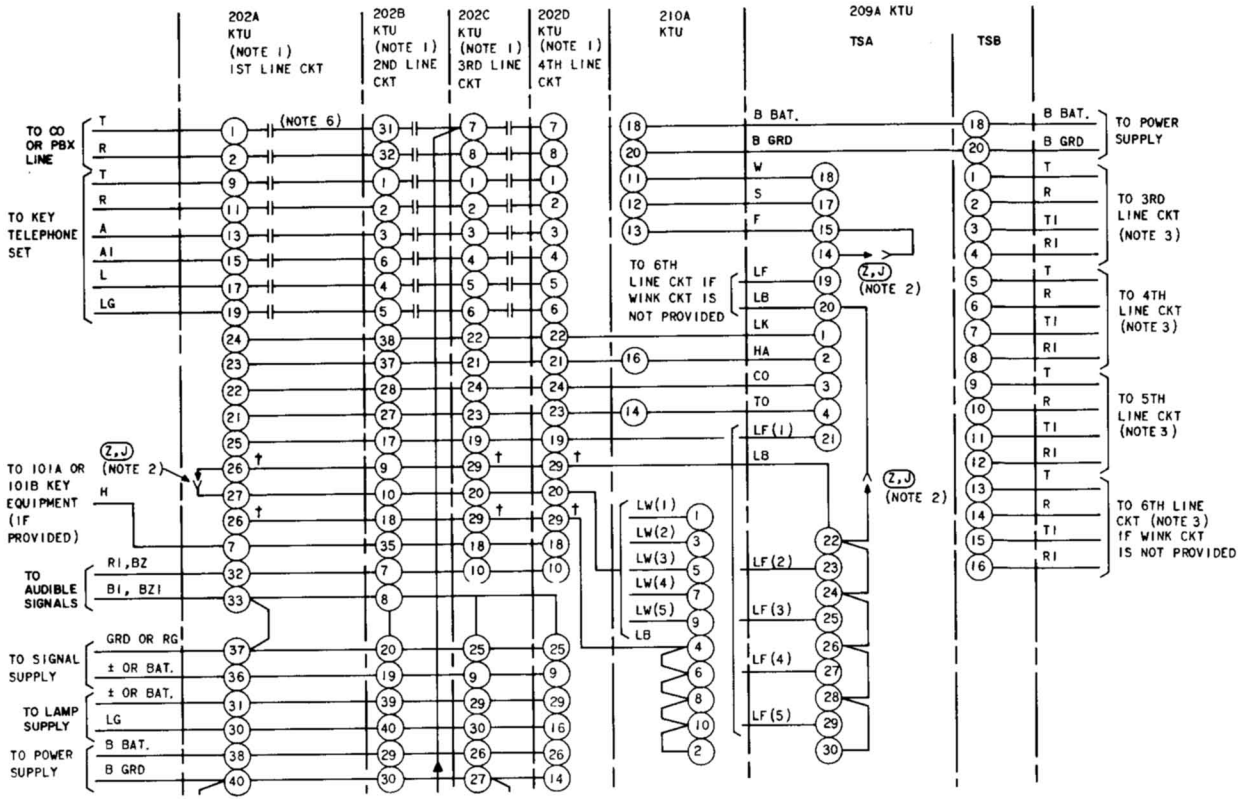

Fig. 1—Connections for CO or PBX Line Circuits (202A, B, C, D KTUs) with 209A and 210A KTUs for Line Pickup and Hold, Line and Busy Lamps, Metallic or Grounded Ringing, Timeout, Lamp Wink, and Power Failure (Sheet 1)

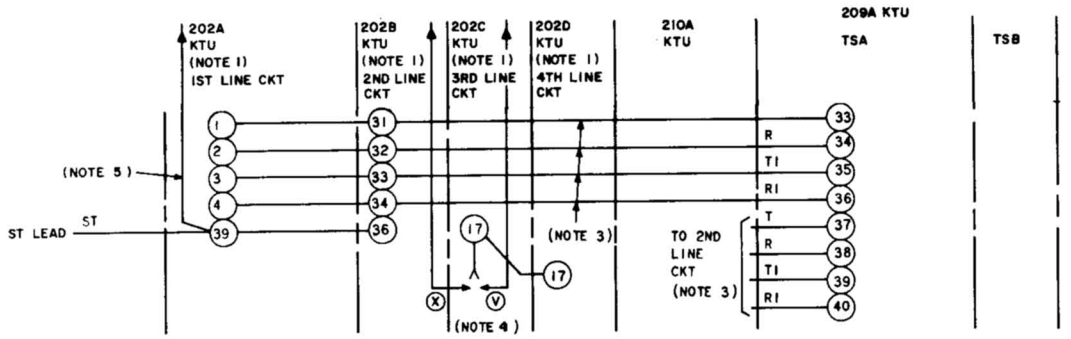

NOTES:

1. CONNECTIONS ARE SHOWN FOR EACH TYPE OF 202 KTU. FOR MORE THAN ONE LINE CIRCUIT, MULTIPLE CONNECTIONS TO THE SUCCEEDING LINE CIRCUITS. THE 209A KTU WILL SERVE FIVE LINE CIRCUITS WITH WINK HOLD AND SIX LINE CIRCUITS WITHOUT WINK HOLD.
2. ADD (Z,J) WIRING WHEN WINK HOLD IS NOT PROVIDED.
3. PROVIDES POWER FAILURE FOR 202A AND 202B KTUS.
4. THE 202C AND 202D KTUS ARE FURNISHED WIRED FOR METALLIC LINE RINGING, (X) OPTION. IF GROUNDED LINE RINGING IS DESIRED, CONNECT (V) OPTION.
5. REMOVE STRAP WHEN ST LEAD IS USED FOR INTERRUPTED AUDIBLE SIGNAL.
6. SYMBOL (-|-) MEANS DO NOT STRAP ADJACENT TERMINALS INDICATED BY STRAPS.

† TERMINAL APPEARS IN OTHER LOCATIONS ON THIS FIGURE.

OPTIONS

FEATURE	WIRING
STEADY HOLD SIGNAL	*J,Z
GROUNDED LINE RINGING	V
METALLIC LINE RINGING (NOTE 4)	X

* Z IS FOR 202A AND B KTU
J IS FOR 202C AND D KTU.

Fig. 1—Connections for CO or PBX Line Circuits (202A, B, C, D KTUs) with 209A and 210A KTUs for Line Pickup and Hold, Line and Busy Lamps, Metallic or Grounded Ringing, Timeout, Lamp Wink, and Power Failure (Sheet 2)

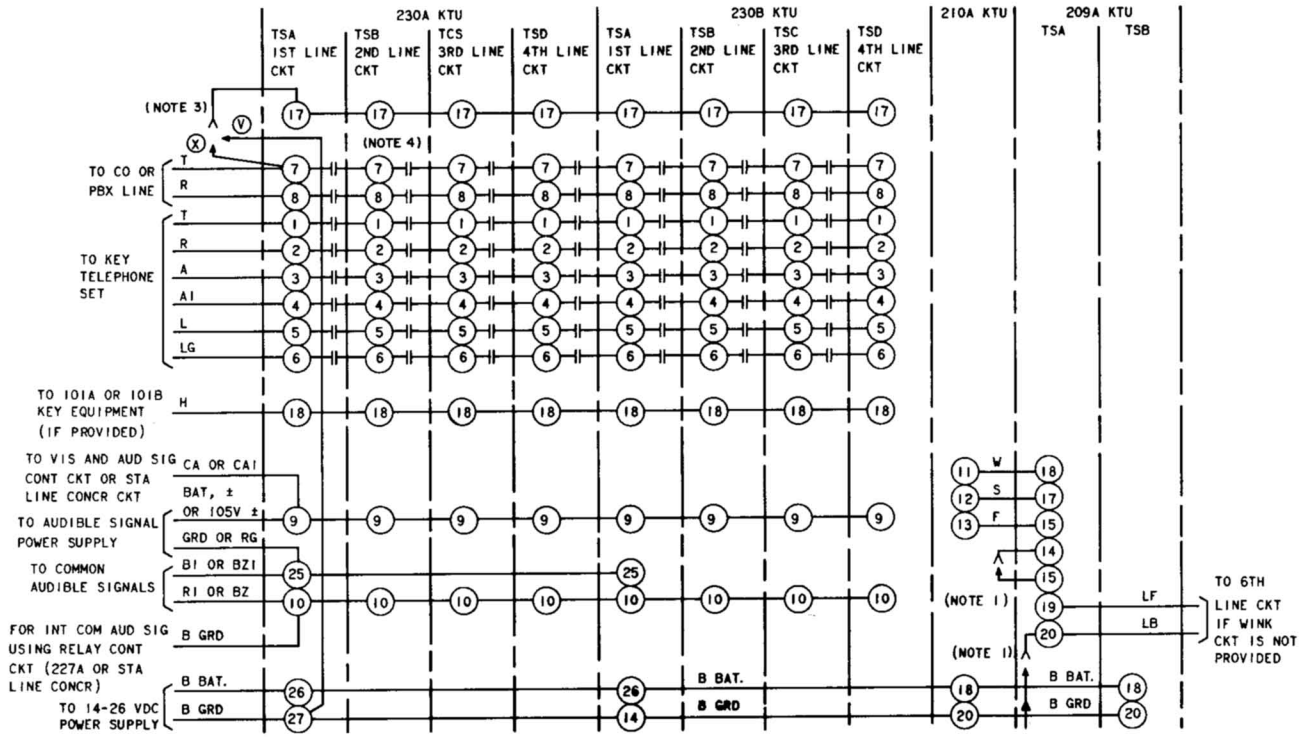

Fig. 2—Connections for CO or PBX Line Circuits (230A or B KTUs) with 209A and 210A KTUs for Line Pickup and Hold, Line and Busy Lamps, Metallic or Grounded Ringing, Timeout, and Lamp Wink (Sheet 1)

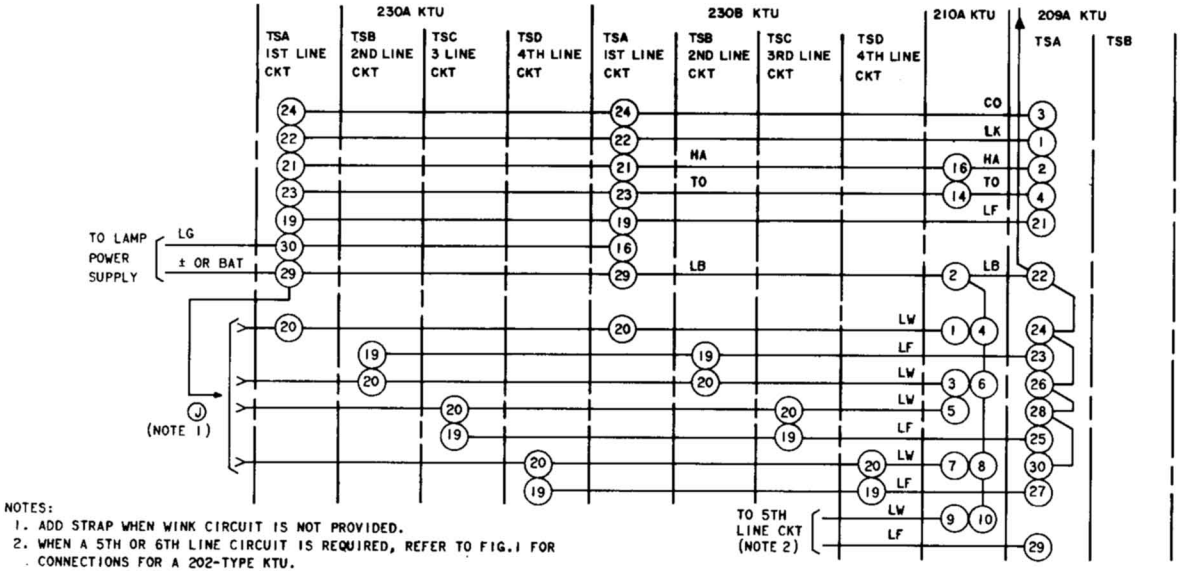

NOTES:

1. ADD STRAP WHEN WINK CIRCUIT IS NOT PROVIDED.
2. WHEN A 5TH OR 6TH LINE CIRCUIT IS REQUIRED, REFER TO FIG.1 FOR CONNECTIONS FOR A 202-TYPE KTU.
3. THE 230A AND 230B KTUS ARE FURNISHED WIRED FOR METALLIC LINE RINGING, (X) OPTION. IF GROUNDED LINE RINGING IS DESIRED, CONNECT (V) OPTION.
4. SYMBOL (—|—) MEANS DO NOT STRAP ADJACENT TERMINALS. RUN LEADS TO LOCATION INDICATED BY LEGEND.

OPTIONS

FEATURE	WIRING
STEADY HOLD SIGNAL	J
GROUNDED LINE RINGING	V
METALLIC LINE RINGING (NOTE 3)	X

Fig. 2—Connections for CO or PBX Line Circuits (230A or B KTUs) with 209A and 210A KTUs for Line Pickup and Hold, Line and Busy Lamps, Metallic or Grounded Ringing, Timeout, and Lamp Wink (Sheet 2)

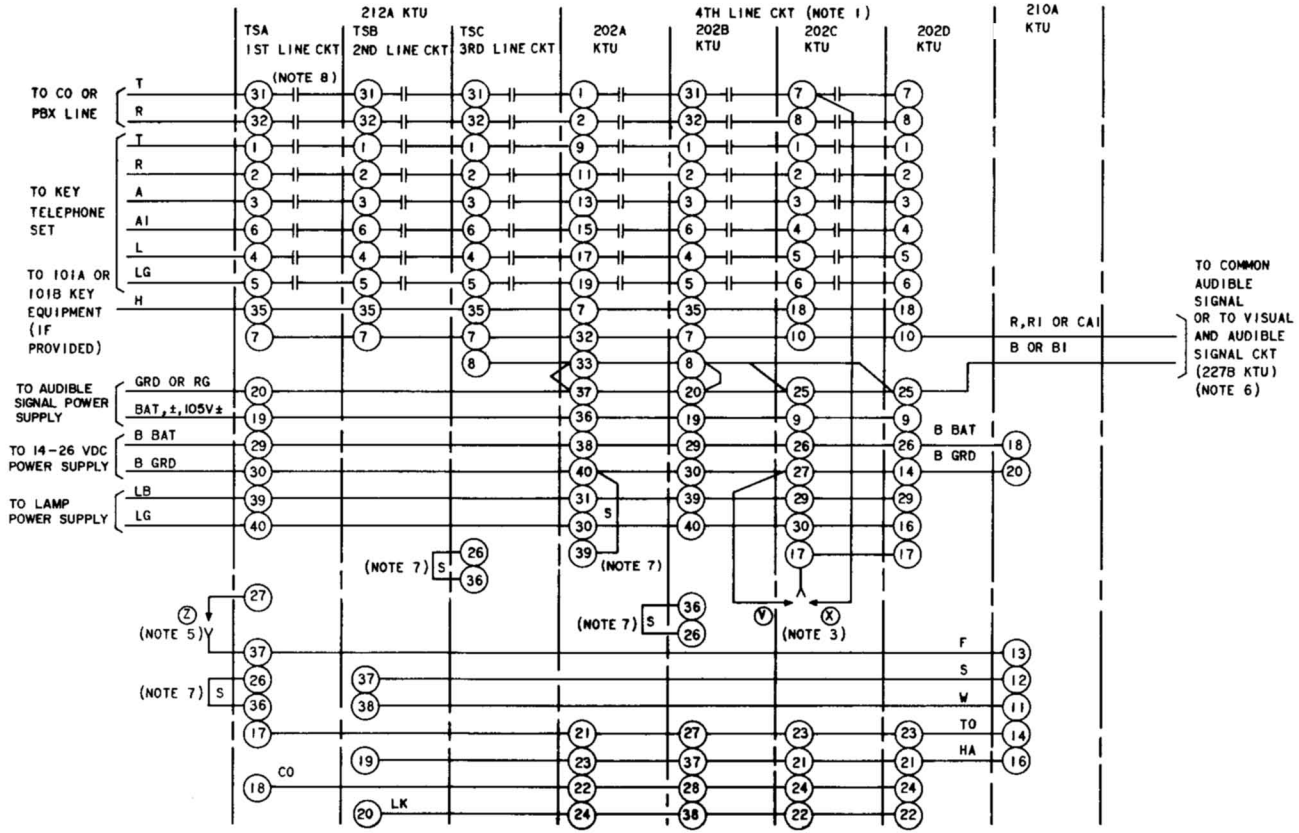

Fig. 3—Connections for CO or PBX Line Circuits (202A, B, C or D and 212A KTUs) with 210A and 227B KTUs for Line Pickup and Hold, Line and Busy Lamps, Common Audible Signal, Timeout, Lamp Wink, and Power Failure (Sheet 1)

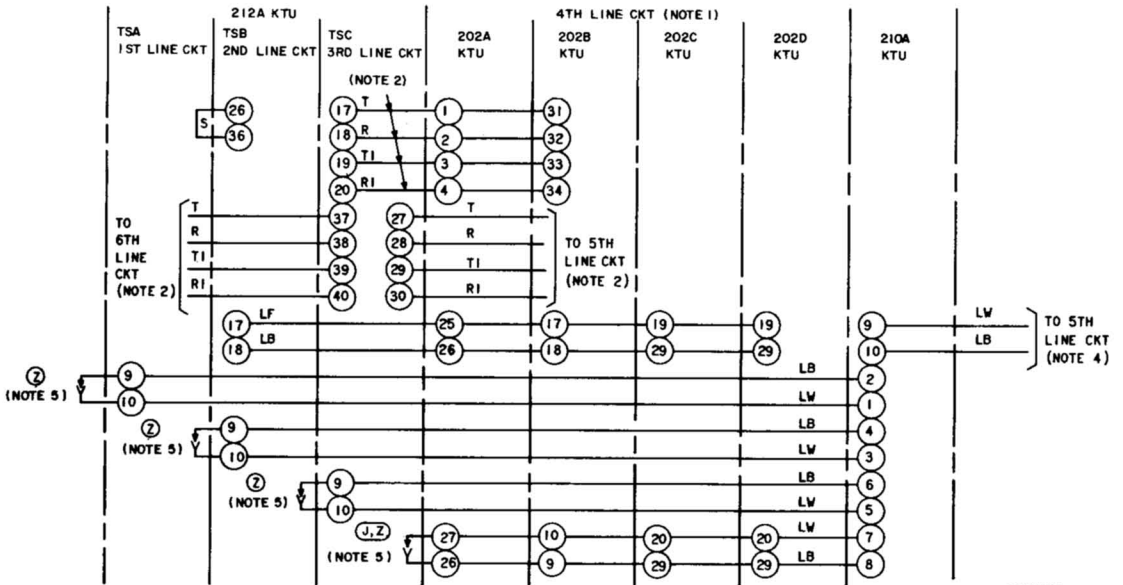

NOTES:

1. THE 212A KTU PROVIDES THREE CO OR PBX LINE CIRCUITS WITH COMMON EQUIPMENT FOR SIX LINE CIRCUITS. ONE OF EACH TYPE OF 202 KTU IS SHOWN AS A FOURTH LINE CIRCUIT. WHEN A FIFTH OR SIXTH LINE CIRCUIT IS REQUIRED, MULTIPLE LEADS TO THE SUCCEEDING LINE CIRCUITS.
2. PROVIDES POWER FAILURE CIRCUIT FOR 202A AND 202B KTU.
3. THE 202C AND 202D KTUS ARE FURNISHED WIRED FOR METALLIC LINE RINGING (X) OPTION IF GROUNDED LINE RINGING IS DESIRED, CONNECT (V) OPTION.
4. IF WINK CIRCUIT IS REQUIRED FOR THE SIXTH LINE CIRCUIT, A SECOND 210A KTU MUST BE FURNISHED.
5. ADD STRAP WHEN WINK CIRCUIT IS NOT PROVIDED.
6. FOR CONNECTIONS TO VISUAL AND AUDIBLE SIGNAL CIRCUIT (227B KTU) REFER TO SECTION 518-310-401.
7. REMOVE S WIRING FROM ALL ASSOCIATED TERMINAL STRIPS WHEN START LEAD IS USED FOR INTERRUPTED SIGNAL.
8. SYMBOL (HI) MEANS DO NOT STRAP ADJACENT TERMINALS. RUN LEADS TO LOCATION INDICATED BY LEGEND.

OPTIONS

FEATURES	WIRING
STEADY HOLD SIG.	J,Z*
GROUNDED LINE RINGING	V
METALLIC LINE RINGING (NOTE 3)	X

* Z IS FOR 212A AND 202A AND 202B KTUS. J IS FOR 202C AND 202D KTUS.

Fig. 3—Connections for CO or PBX Line Circuits (202A, B, C or D and 212A KTUs) with 210A and 227B KTUs for Line Pickup and Hold, Line and Busy Lamps, Common Audible Signal, Timeout, Lamp Wink, and Power Failure (Sheet 2)

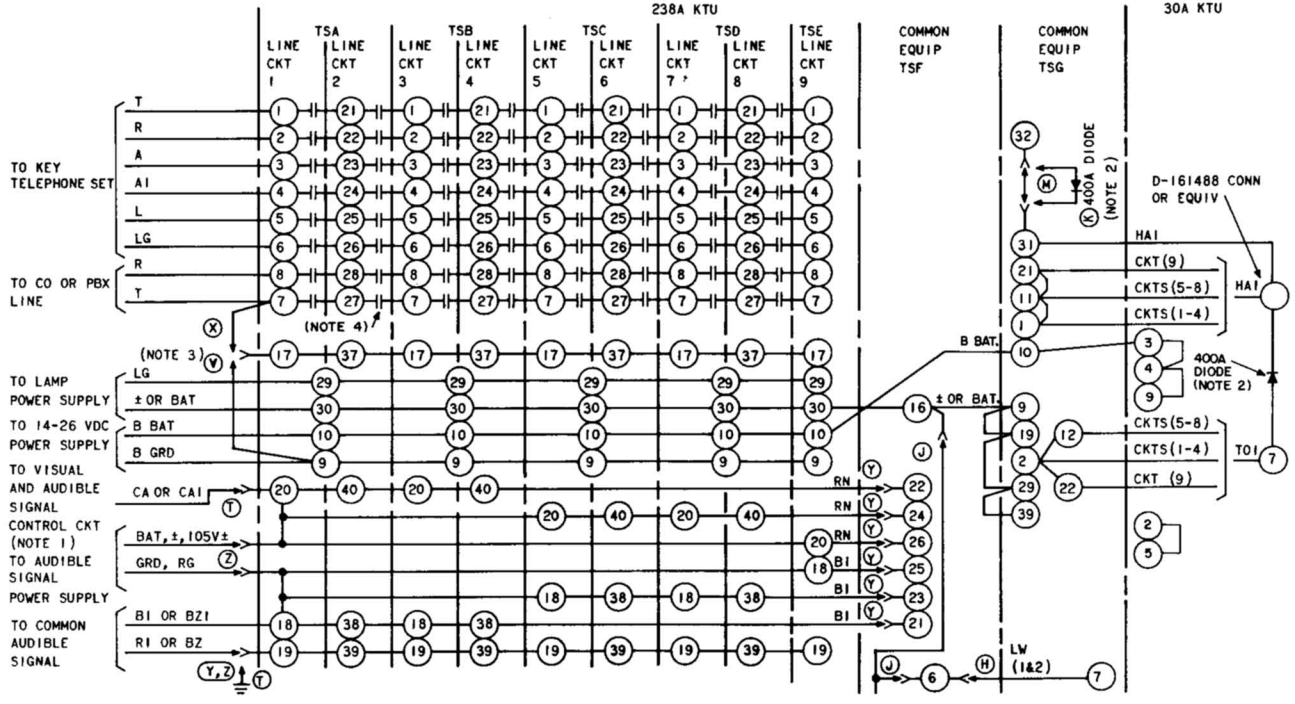

Fig. 4—Connections for CO or PBX Line Circuits (238A KTU) with 30A and 227B KTUs for Line Pickup and Hold, Line and Busy Lamps, Interrupted Audible Signals, Common Audible Signals, Auxiliary Timeout, and Lamp Wink (Sheet 1)

NOTES:

1. FOR CONNECTIONS TO VISUAL AND AUDIBLE SIGNAL CIRCUIT (227B KTU), REFER TO SECTION 518-310-401.
2. PROCURE AND INSTALL LOCALLY.
3. METALLIC LINE RINGING, (X) OPTION, IS FURNISHED ON ALL LINE CIRCUITS. IF GROUNDED LINE RINGING IS DESIRED, CONNECT (V) OPTION.
4. SYMBOL (-|-) MEANS DO NOT STRAP ADJACENT TERMINALS. RUN LEADS TO LOCATION INDICATED BY LEGEND.

OPTIONS

FEATURE	WIRING
WINKING HOLD SIGNAL	H
STEADY HOLD SIGNAL	J
WITH AUXILIARY TIMEOUT	K
WITHOUT AUXILIARY TIMEOUT	M
INTERRUPTED COMMON AUDIBLE SIGNAL USING RELAY CONTROL CIRCUIT (227B KTU)	T
GROUNDED LINE RINGING	V
METALLIC LINE RINGING (FURNISHED ON ALL LINE CIRCUITS)	X
INTERRUPTED COMMON AUDIBLE SIGNAL USING INTERRUPTER	Y
STEADY COMMON AUDIBLE SIGNAL	Z

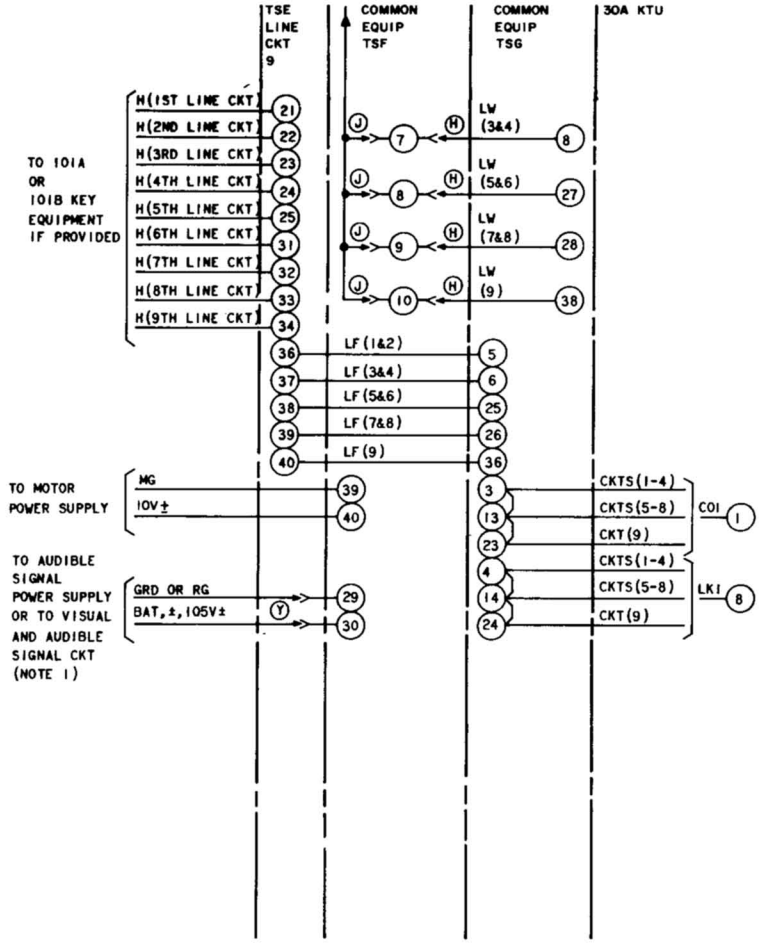

Fig. 4—Connections for CO or PBX Line Circuits (238A KTU) with 30A and 227B KTUs for Line Pickup and Hold, Line and Busy Lamps, Interrupted Audible Signals, Common Audible Signals, Auxiliary Timeout, and Lamp Wink (Sheet 2)

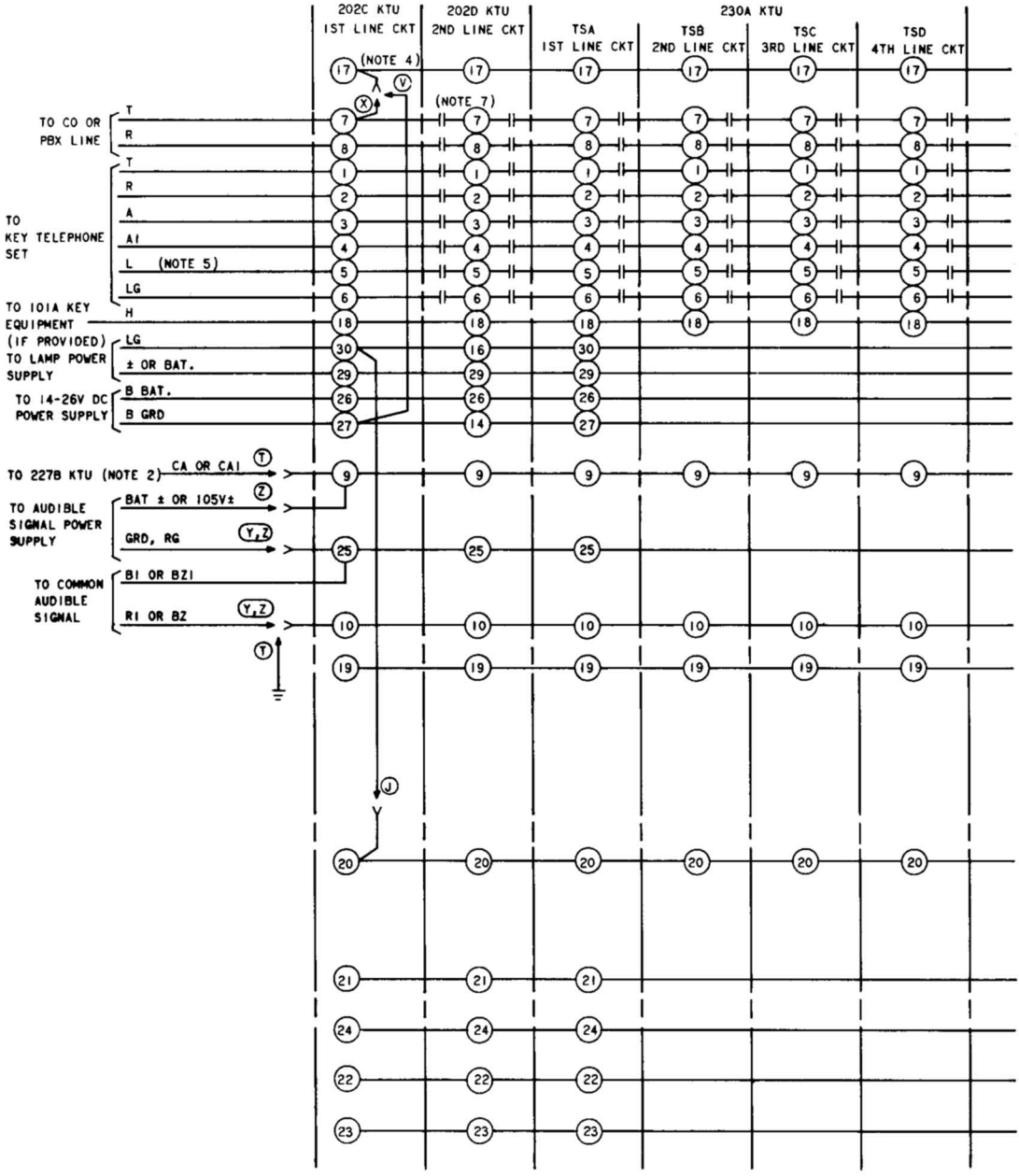

Fig. 5—Connections for CO or PBX Line Circuits (202C or D, or 230A or B KTUs) with 232-Type, 30A, and 227B KTUs for Line Pickup and Hold, Line and Busy Lamps, Interrupted Audible Signals, Common Audible Signals, Auxiliary Timeout, Lamp Wink, and Manual Intercom (Sheet 1)

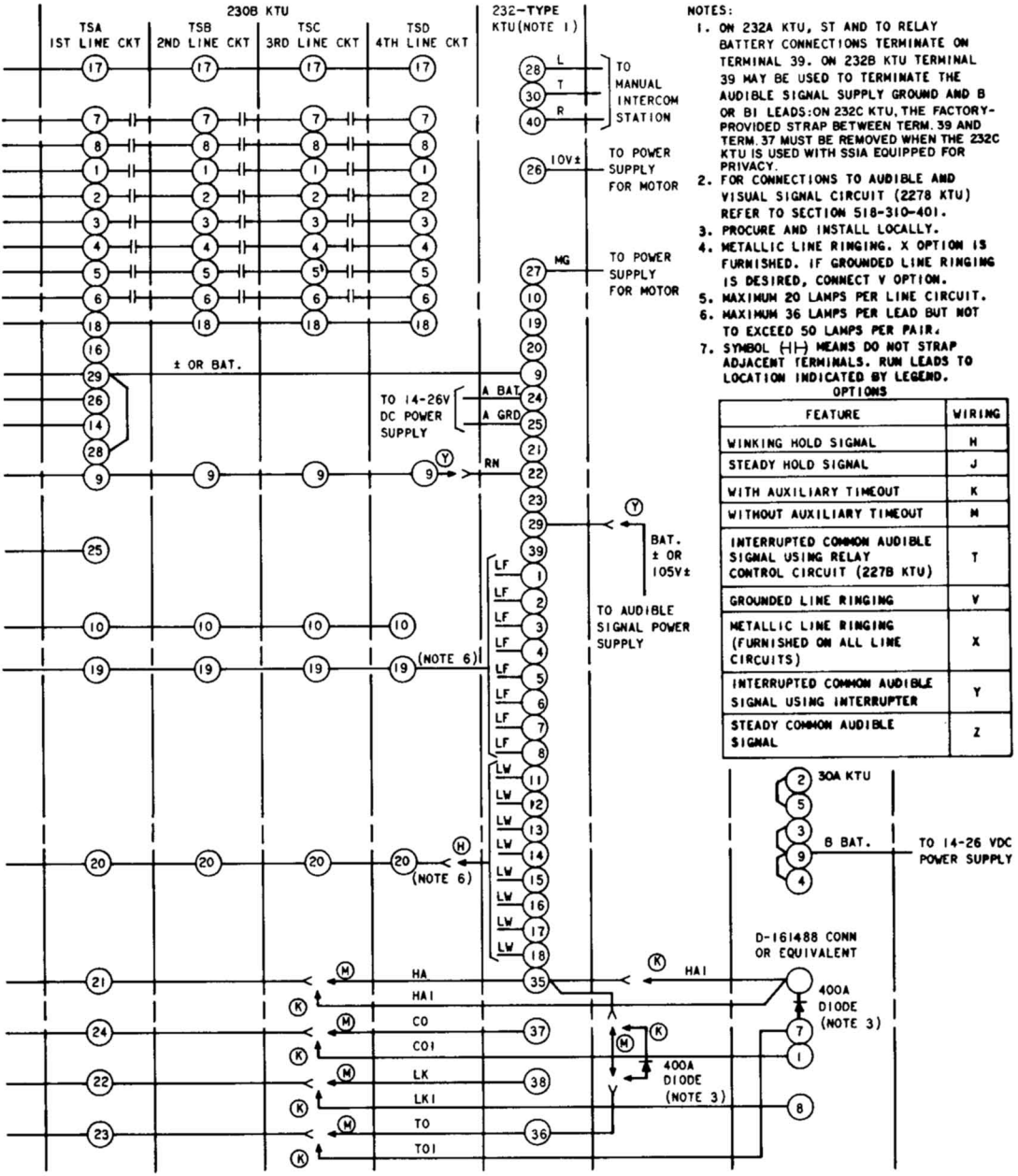

NOTES:

1. ON 232A KTU, ST AND TO RELAY BATTERY CONNECTIONS TERMINATE ON TERMINAL 39. ON 232B KTU TERMINAL 39 MAY BE USED TO TERMINATE THE AUDIBLE SIGNAL SUPPLY GROUND AND B OR B1 LEADS: ON 232C KTU, THE FACTORY-PROVIDED STRAP BETWEEN TERM. 39 AND TERM. 37 MUST BE REMOVED WHEN THE 232C KTU IS USED WITH SSIA EQUIPPED FOR PRIVACY.
2. FOR CONNECTIONS TO AUDIBLE AND VISUAL SIGNAL CIRCUIT (2278 KTU) REFER TO SECTION 518-310-401.
3. PROCURE AND INSTALL LOCALLY.
4. METALLIC LINE RINGING. X OPTION IS FURNISHED. IF GROUNDED LINE RINGING IS DESIRED, CONNECT V OPTION.
5. MAXIMUM 20 LAMPS PER LINE CIRCUIT.
6. MAXIMUM 36 LAMPS PER LEAD BUT NOT TO EXCEED 50 LAMPS PER PAIR.
7. SYMBOL ⊣|⊢ MEANS DO NOT STRAP ADJACENT TERMINALS. RUN LEADS TO LOCATION INDICATED BY LEGEND.

OPTIONS

FEATURE	WIRING
WINKING HOLD SIGNAL	H
STEADY HOLD SIGNAL	J
WITH AUXILIARY TIMEOUT	K
WITHOUT AUXILIARY TIMEOUT	M
INTERRUPTED COMMON AUDIBLE SIGNAL USING RELAY CONTROL CIRCUIT (227B KTU)	T
GROUNDED LINE RINGING	V
METALLIC LINE RINGING (FURNISHED ON ALL LINE CIRCUITS)	X
INTERRUPTED COMMON AUDIBLE SIGNAL USING INTERRUPTER	Y
STEADY COMMON AUDIBLE SIGNAL	Z

Fig. 5—Connections for CO or PBX Line Circuits (202C or D, or 230A or B KTUs) with 232-Type, 30A, and 227B KTUs for Line Pickup and Hold, Line and Busy Lamps, Interrupted Audible Signals, Common Audible Signals, Auxiliary Timeout, Lamp Wink, and Manual Intercom (Sheet 2)

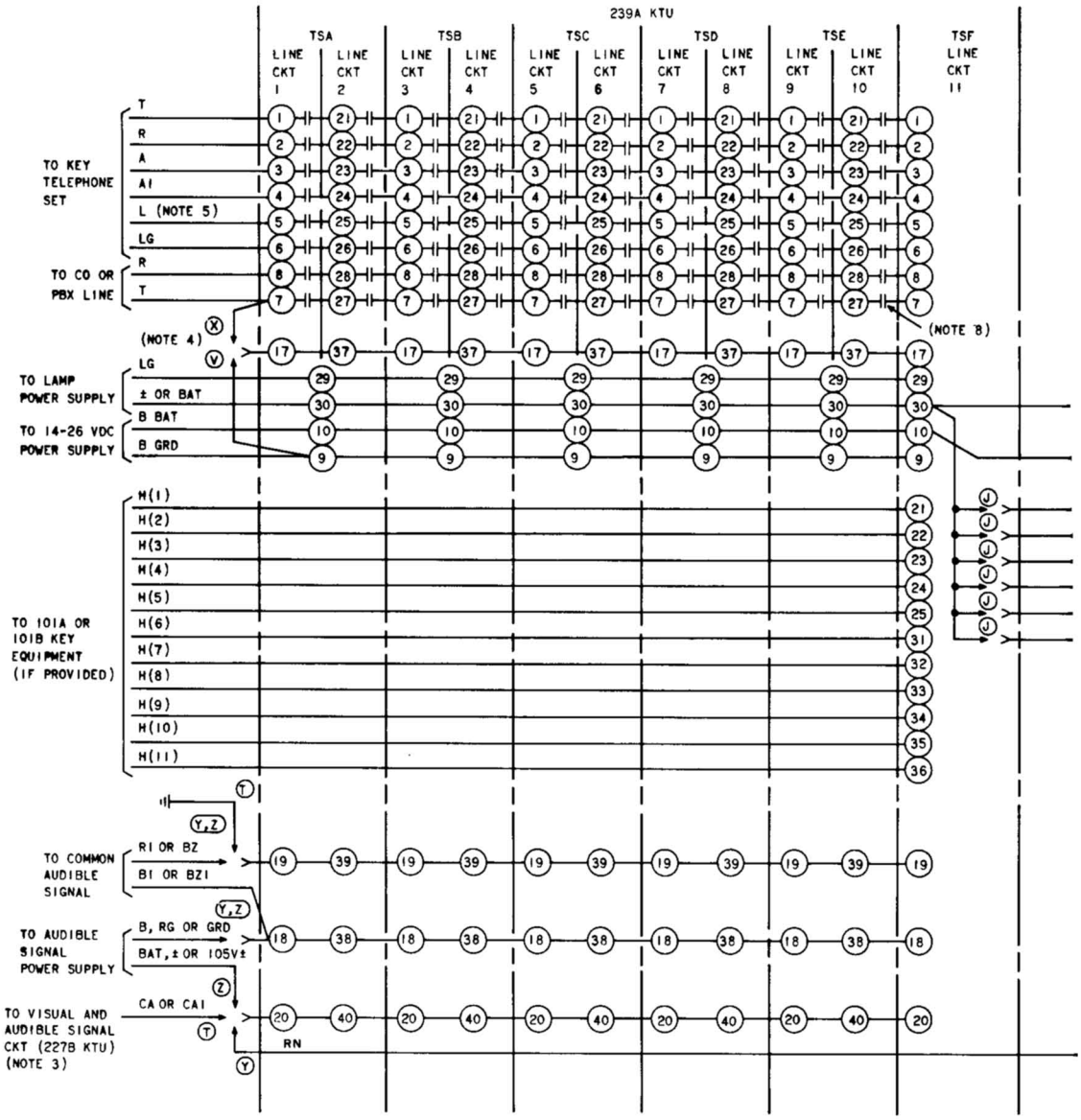

Fig. 6—Connections for CO or PBX Line Circuits (239A KTU) with 232-Type, 30A, and 227B KTUs for Line Pickup and Hold, Line and Busy Lamps, Interrupted Audible Signals, Common Audible Signals, Auxiliary Timeout, Lamp Wink, and Manual Intercom (Sheet 1)

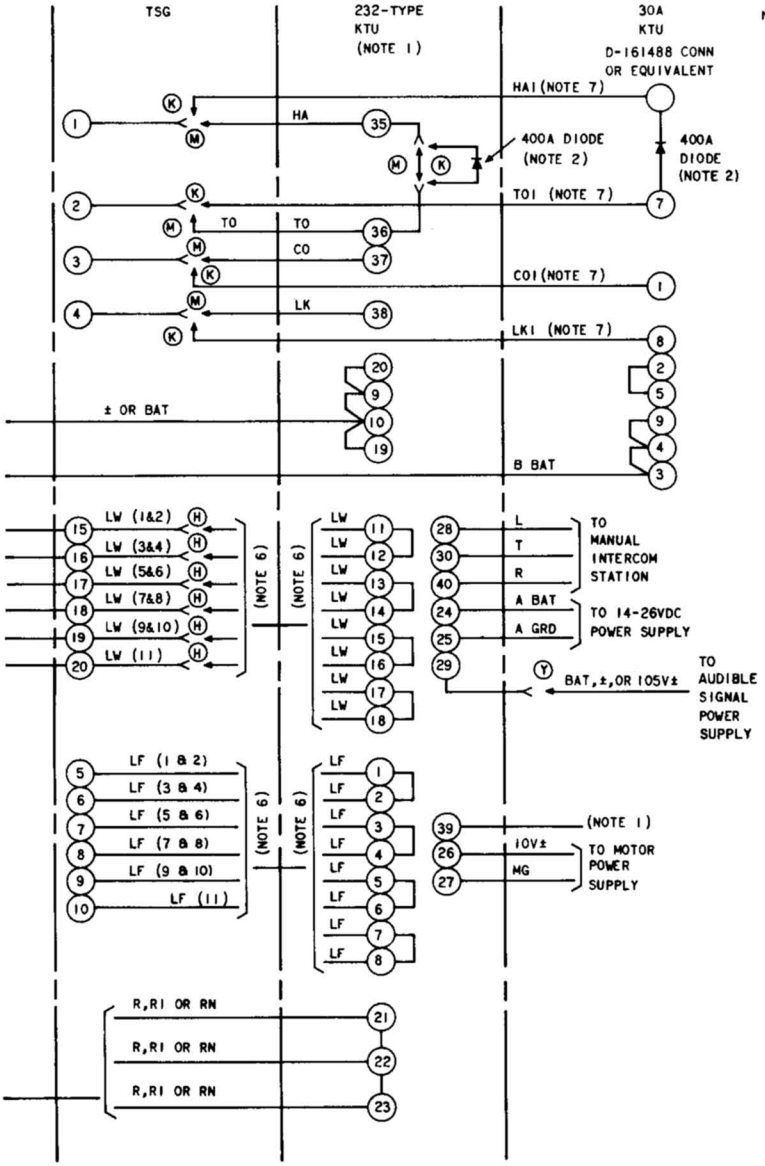

NOTES:

1. ON 232A KTU, ST AND TO BATTERY CONNECTIONS TERMINATE ON TERMINAL 39. ON 232B KTU, TERMINAL 39 MAY BE USED TO TERMINATE THE AUDIBLE SIGNAL SUPPLY GROUND. ON 232C KTU, THE FACTORY-PROVIDED STRAP BETWEEN TERM. 39 AND TERM. 37 MUST BE REMOVED WHEN THE 232C KTU IS USED WITH SSIA EQUIPPED FOR PRIVACY.
2. PROCURE AND INSTALL LOCALLY.
3. FOR CONNECTIONS TO VISUAL AND AUDIBLE SIGNAL CIRCUIT (227B KTU) REFER TO SECTION 518-310-401.
4. ALL LINE CIRCUITS ARE FURNISHED WITH METALLIC LINE RINGING, (X) OPTION. IF GROUNDED LINE RINGING IS DESIRED, CONNECT (Y) OPTION.
5. MAX 20 LAMPS PER LINE CKT.
6. MAX 36 LAMPS PER LEAD BUT NOT TO EXCEED 50 LAMPS PER PAIR.
7. CONNECTIONS SHOWN (K OPTION) ARE FOR CKTS (1-4). FOR CKTS (5-8) CONNECT TO 11G, 12G, 13G AND 14G, RESPECTIVELY. FOR CKTS (9-11) CONNECT TO 21G, 22G, 23G AND 24G, RESPECTIVELY.
8. SYMBOL (⊣⊢) MEANS DO NOT STRAP ADJACENT TERMINALS. RUN LEADS TO LOCATION INDICATED BY LEGEND.

OPTIONS

FEATURE	WIRING
WINKING HOLD SIGNAL	H
STEADY HOLD SIGNAL	J
WITH AUXILIARY TIMEOUT	K
WITHOUT AUXILIARY TIMEOUT	M
INTERRUPTED COMMON AUDIBLE SIGNAL USING RELAY CONTROL CIRCUIT	T
GROUNDED LINE RINGING	V
METALLIC LINE RINGING (FURNISHED ON ALL LINE CIRCUITS)	X
INTERRUPTED COMMON AUDIBLE SIGNAL USING INTERRUPTER	Y
STEADY COMMON AUDIBLE SIGNAL	Z

Fig. 6—Connections for CO or PBX Line Circuits (239A KTU) with 232-Type, 30A, and 227B KTUs for Line Pickup and Hold, Line and Busy Lamps, Interrupted Audible Signals, Common Audible Signals, Auxiliary Timeout, Lamp Wink, and Manual Intercom (Sheet 2)

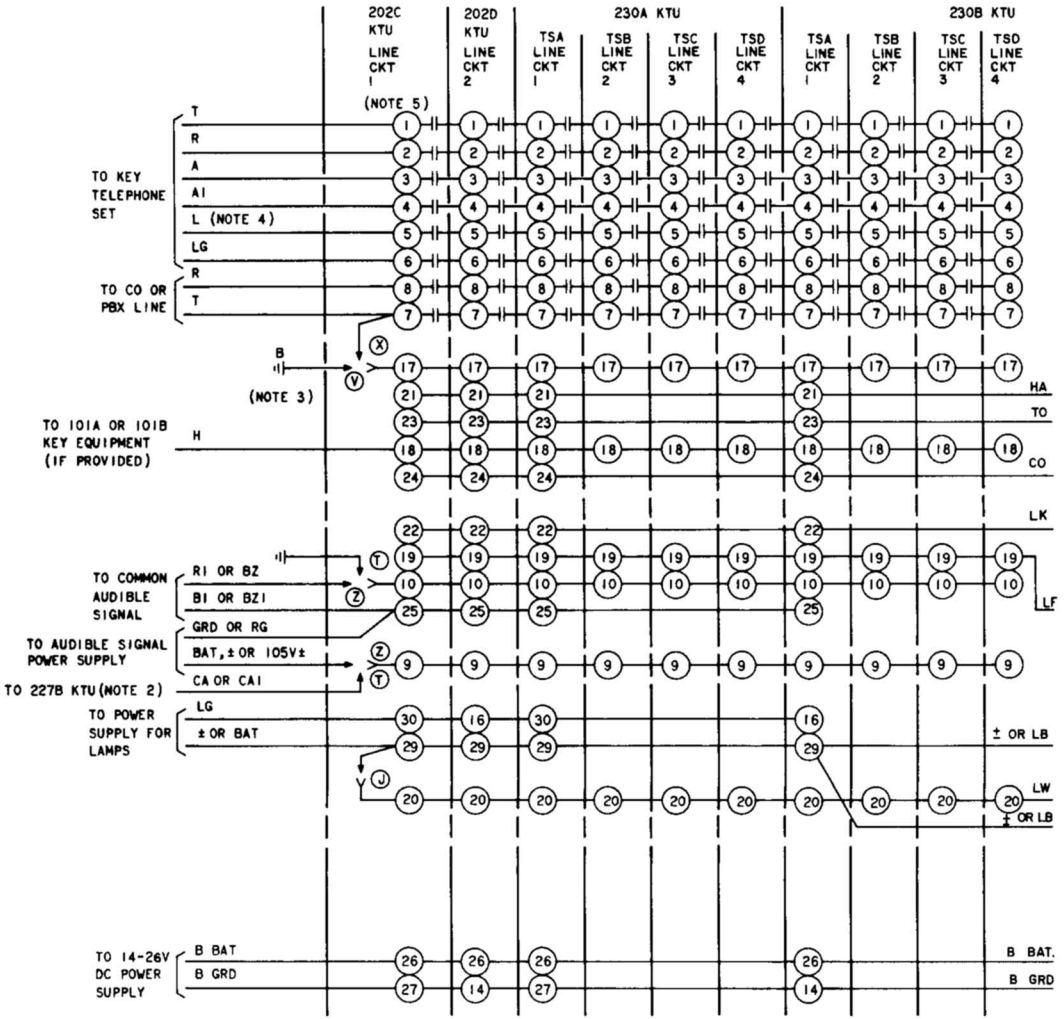

Fig. 7—Connections for CO or PBX Line Circuits (202C or D, or 230A or B KTUs) with 209A and 210A KTUs for Line Pickup and Hold, Line and Busy Lamps, Common Audible Signals, Lamp Wink, and Timeout (Sheet 1)

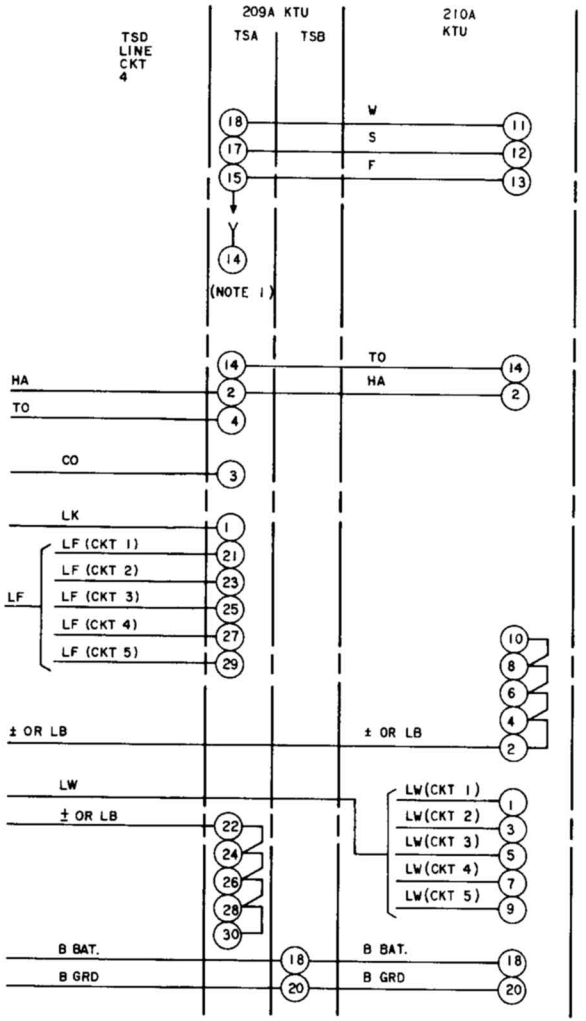

NOTES:

1. ADD STRAP WHEN WINK HOLD IS NOT PROVIDED.
2. FOR CONNECTIONS TO VISUAL AND AUDIBLE SIGNAL CIRCUIT, REFER TO SECTION 518-310-401.
3. ALL LINE CIRCUITS SHOWN ARE FURNISHED WITH METALLIC LINE RINGING, (X) OPTION. IF GROUNDED LINE RINGING IS DESIRED, CONNECT (V) OPTION.
4. MAX 20 LAMPS PER LINE CKT.
5. SYMBOL (⊣⊢) MEANS DO NOT STRAP ADJACENT TERMINALS. RUN LEADS TO LOCATION INDICATED BY LEGEND.

OPTIONS

FEATURE	WIRING
STEADY HOLD SIGNAL	J
INTERRUPTED COMMON AUDIBLE SIGNAL USING RELAY CONTROL CIRCUIT (2278 KTU)	T
GROUNDED LINE RINGING	V
METALLIC LINE RINGING (FURNISHED ON ALL LINE CIRCUITS)	X
STEADY COMMON AUDIBLE SIGNAL	Z

Fig. 7—Connections for CO or PBX Line Circuits (202C or D, or 230A or B KTUs) with 209A and 210A KTUs for Line Pickup and Hold, Line and Busy Lamps, Common Audible Signals, Lamp Wink, and Timeout (Sheet 2)

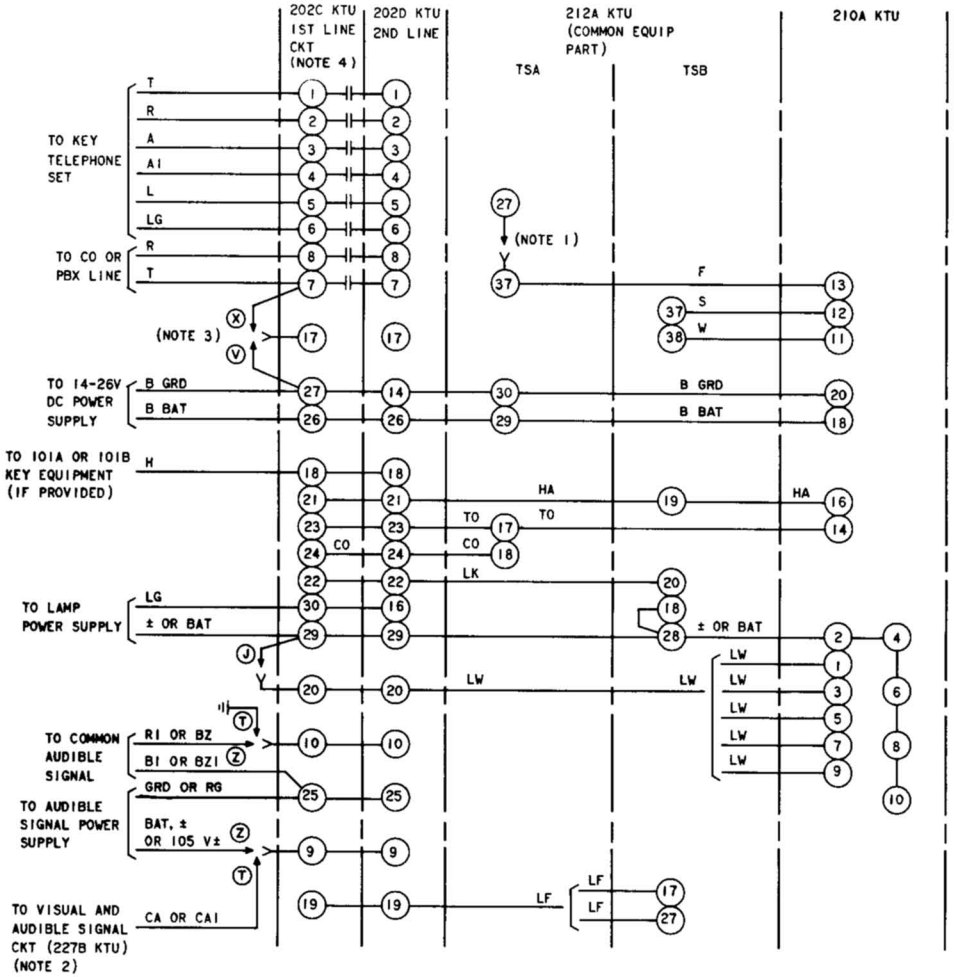

NOTES:

1. ADD STRAP WHEN WINK CIRCUIT IS NOT PROVIDED.
2. FOR CONNECTIONS TO VISUAL AND AUDIBLE SIGNAL CIRCUIT (227B KTU), REFER TO SECTION 518-310-401.
3. 202C OR 202D LINE CIRCUITS ARE FURNISHED WITH METALLIC LINE RINGING (X) OPTION. IF GROUNDED LINE RINGING IS DESIRED, CONNECT (V) OPTION.
4. SYMBOL (⊣⊢) MEANS DO NOT STRAP ADJACENT TERMINALS. RUN LEADS TO LOCATION INDICATED BY LEGEND.

OPTIONS

FEATURES	WIRING
STEADY HOLD SIGNAL	J
INTERRUPTED COMMON AUDIBLE SIGNAL USING RELAY CONTROL CKT (227B KTU)	T
GROUNDED LINE RINGING	V
METALLIC LINE RINGING (FURNISHED ON ALL LINE CKTS)	X
STEADY COMMON AUDIBLE SIGNAL	Z

Fig. 8—Connections for CO or PBX Line Circuits (202C or D) with 210A KTU and only the Common Equipment Part of 212A KTU for Line Pickup and Hold, Line and Busy Lamps, Common Audible Signals, Lamp Wink, and Timeout

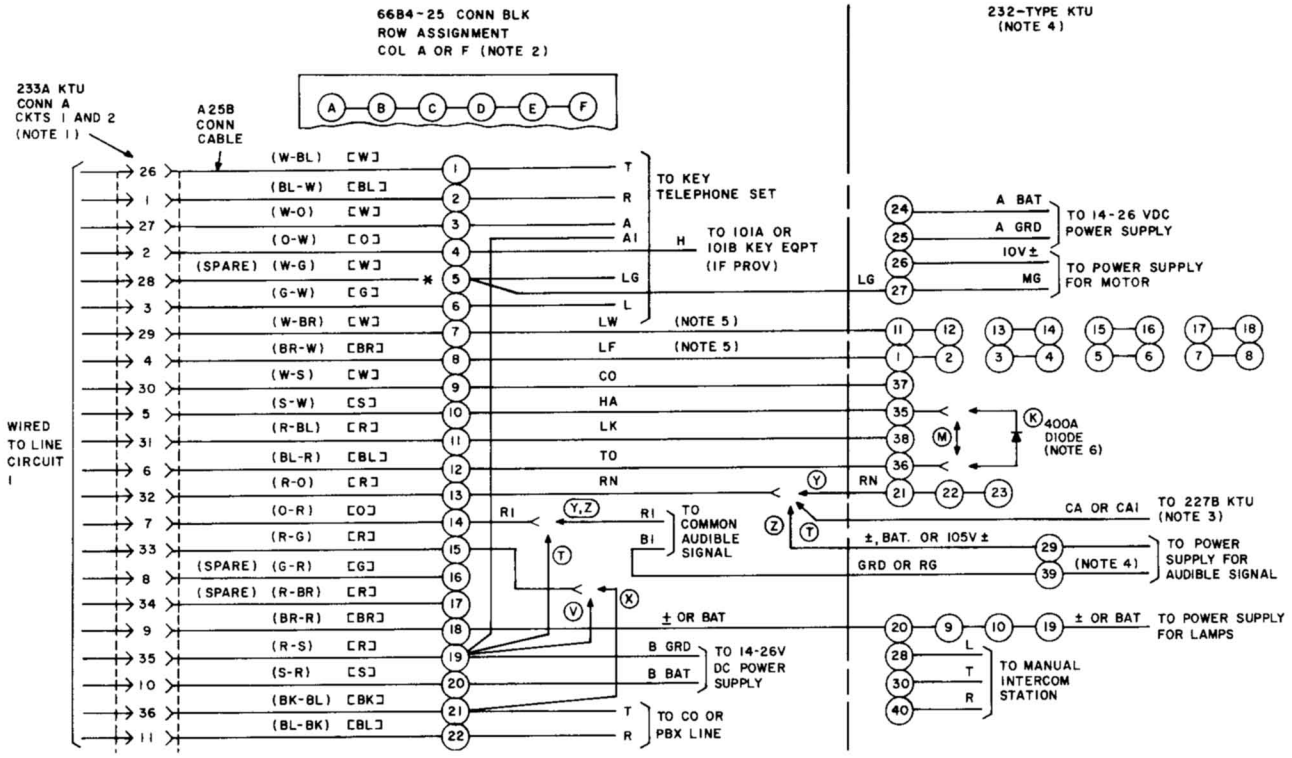

Fig. 9—Connections for CO or PBX Line Circuits (233A KTU) with 227B and 232-Type KTUs for Line Pickup and Hold, Line and Busy Lamps, Interrupted Audible Signals, Lamp Wink, Manual Intercom, and Timeout (Sheet 1)

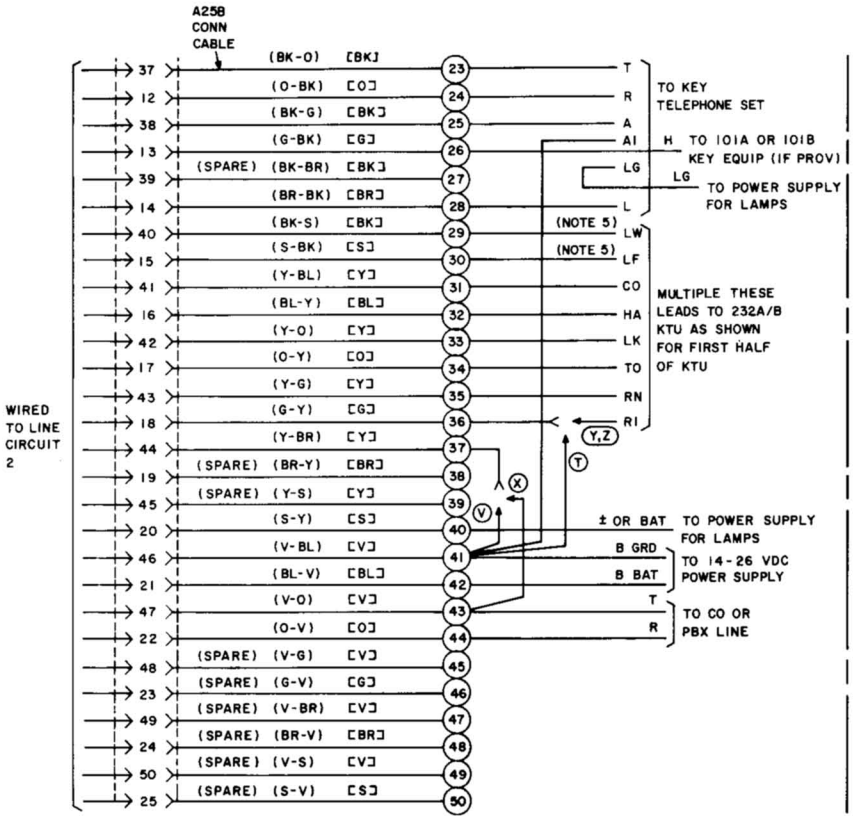

NOTES:

1. TWO LINE CIRCUITS TERMINATE IN EACH CONNECTOR ON THE 233A KTU. THE CONNECTORS AND LINE CIRCUITS ARE ARRANGED AS FOLLOWS:

CONN	A	B	C	D	E
LINE CKTS	1 2	3 4	5 6	7 8	9 10

THE CONNECTIONS SHOWN ARE FOR CONN A LINE CKTS 1 AND 2. THE LEADS FROM CONNECTORS B THROUGH E ARE TERMINATED IN THE SAME MANNER.

2. TERMINATE CONN CABLE TO COL F IF LEFT HAND BLOCK OR TO COL A IF RIGHT HAND BLOCK.
3. FOR CONNECTIONS TO VISUAL AND AUDIBLE SIGNAL CIRCUIT (227B KTU) REFER TO SECTION 518-310-401.
4. ON 232A KTU, ST AND TO RELAY BATTERY CONNECTIONS TERMINATE ON TERMINAL 39. ON 232B KTU, TERMINAL 39 MAY BE USED TO TERMINATE THE AUDIBLE SIGNAL SUPPLY GROUND AND B OR BI LEADS. ON 232C KTU, THE FACTORY-PROVIDED STRAP BETWEEN TERM. 39 AND TERM. 37 MUST BE REMOVED WHEN THE 232C KTU IS USED WITH SS1A EQUIPPED FOR PRIVACY.
5. LF AND LW LEADS SHOULD NOT EXCEED 50 LAMPS PER GROUP.
6. PROCURE AND INSTALL LOCALLY.

OPTIONS

FEATURES		WIRING
WITH AUX TIME-OUT CKT		K
WITHOUT AUX TIME-OUT CKT		M
LINE RINGING CKT	METALLIC	X
	GROUNDED WITH COM AUD CONT RELAY NOT PROV	V
COMMON AUDIBLE	INTERRUPTED RINGING WITH VISUAL AND AUDIBLE SIGNAL CKT PROVIDED	T OR Y
	STEADY RINGING	

* INSULATE AND STORE
( ) CURRENT COLOR CODE
[ ] MD COLOR CODE

Fig. 9—Connections for CO or PBX Line Circuits (233A KTU) with 227B and 232-Type KTUs for Line Pickup and Hold, Line and Busy Lamps, Interrupted Audible Signals, Lamp Wink, Manual Intercom, and Timeout (Sheet 2)

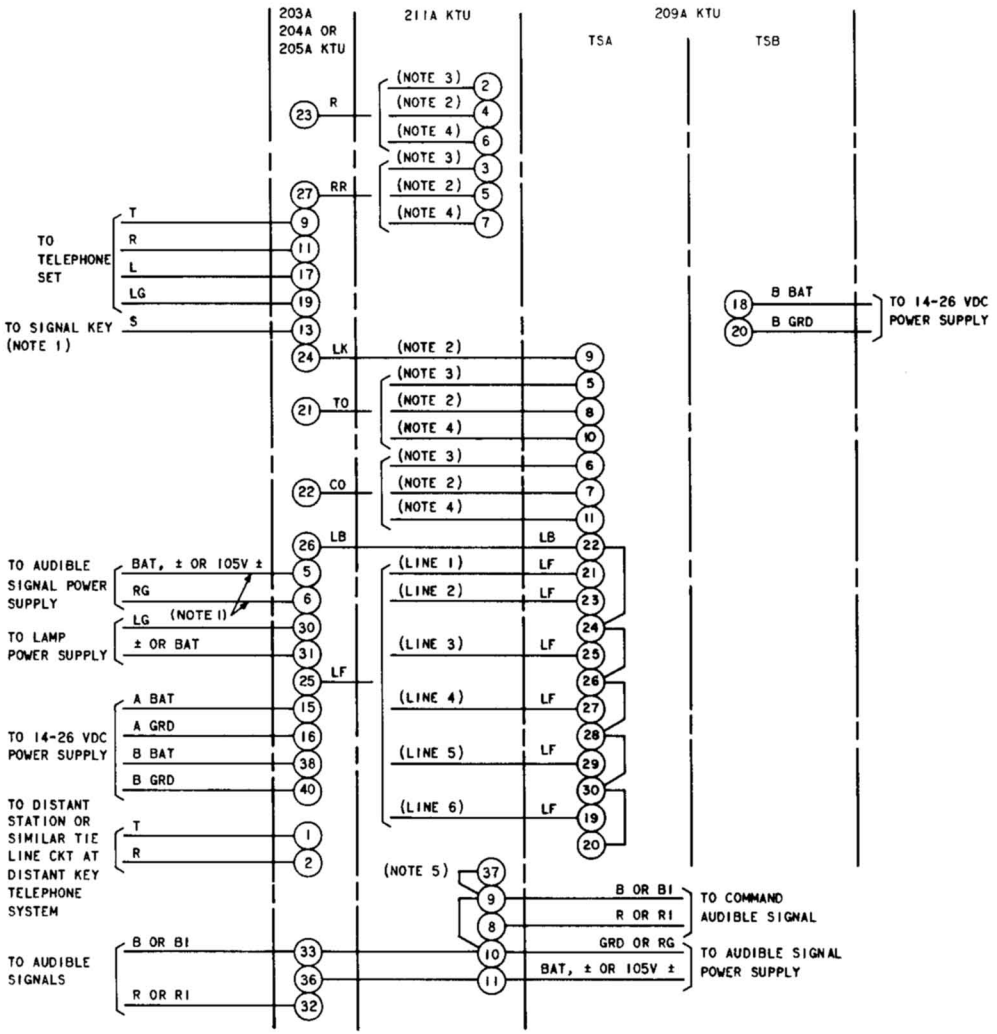

NOTES:
1. FOR 204A AND 205A KTU ONLY.
2. FOR 204A KTU ONLY.
3. FOR 203A KTU ONLY.
4. FOR 205A KTU ONLY.
5. CONNECT AS SHOWN WHEN BAT OR 18V ± IS USED. WHEN 105V ± IS USED CONNECT TO LOCAL GROUND IF CENTRAL OFFICE GENERATOR IS USED, OTHERWISE IT MAY BE STRAPPED TO THE POWER SUPPLY GROUND.

Fig. 10—Connections for Automatic Tie Line Circuit (203A KTU) or Ringdown Tie Line Circuit (204A KTU) or Station Line Circuit (205A KTU) with 209A and 211A KTUs for Steady Common Audible Signals, Line and Busy Lamps, and Timeout

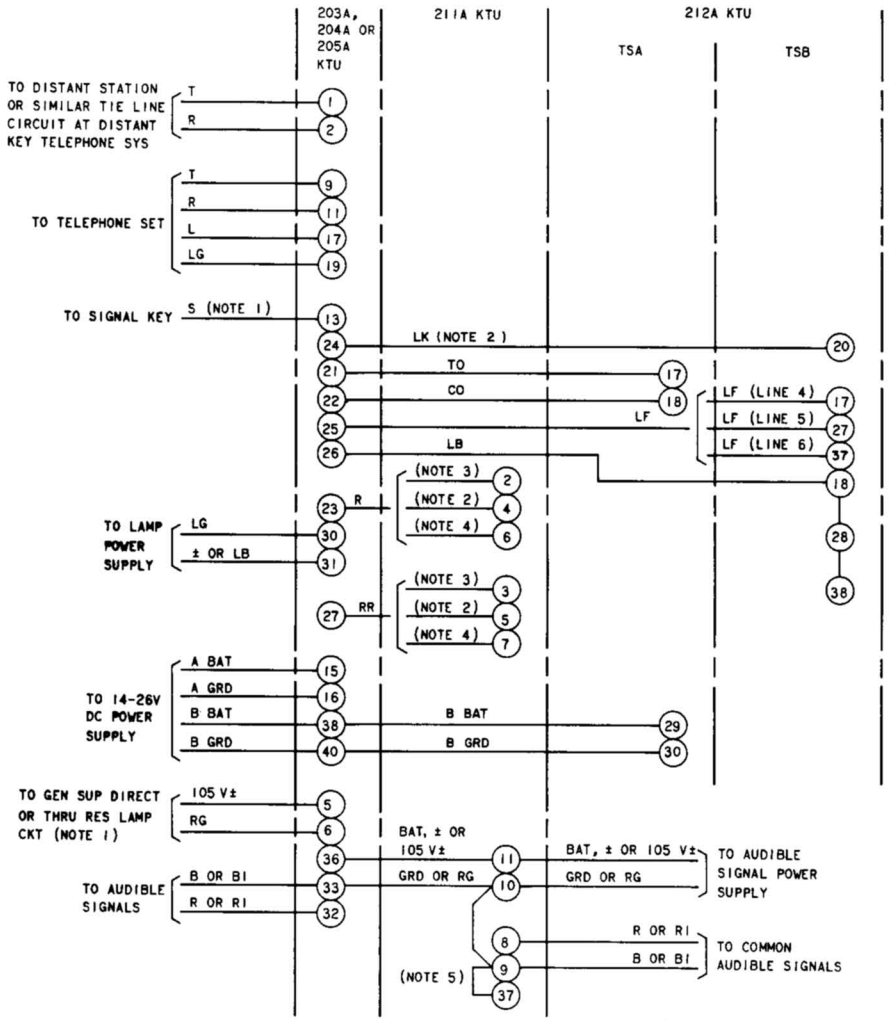

NOTES:
1. FOR 204A AND 205A KTU ONLY.
2. FOR 204A KTU ONLY.
3. FOR 203A KTU ONLY.
4. FOR 205A KTU ONLY.
5. CONNECT AS SHOWN WHEN BAT OR 18 V± IS USED. WHEN 105 V± IS USED, CONNECT TO LOCAL GROUND IF CENTRAL OFFICE GENERATOR IS USED, OTHERWISE IT MAY BE STRAPPED TO THE POWER SUPPLY GROUND.

Fig. 11—Connections for Automatic Tie Line Circuit (203A KTU) or Ringdown Tie Line Circuit (204A KTU) or Station Line Circuit (205A KTU) with 211A KTU and only the Common Equipment Part of 212A KTU for Steady Audible or Common Audible Signals, Line and Busy Lamps, and Timeout

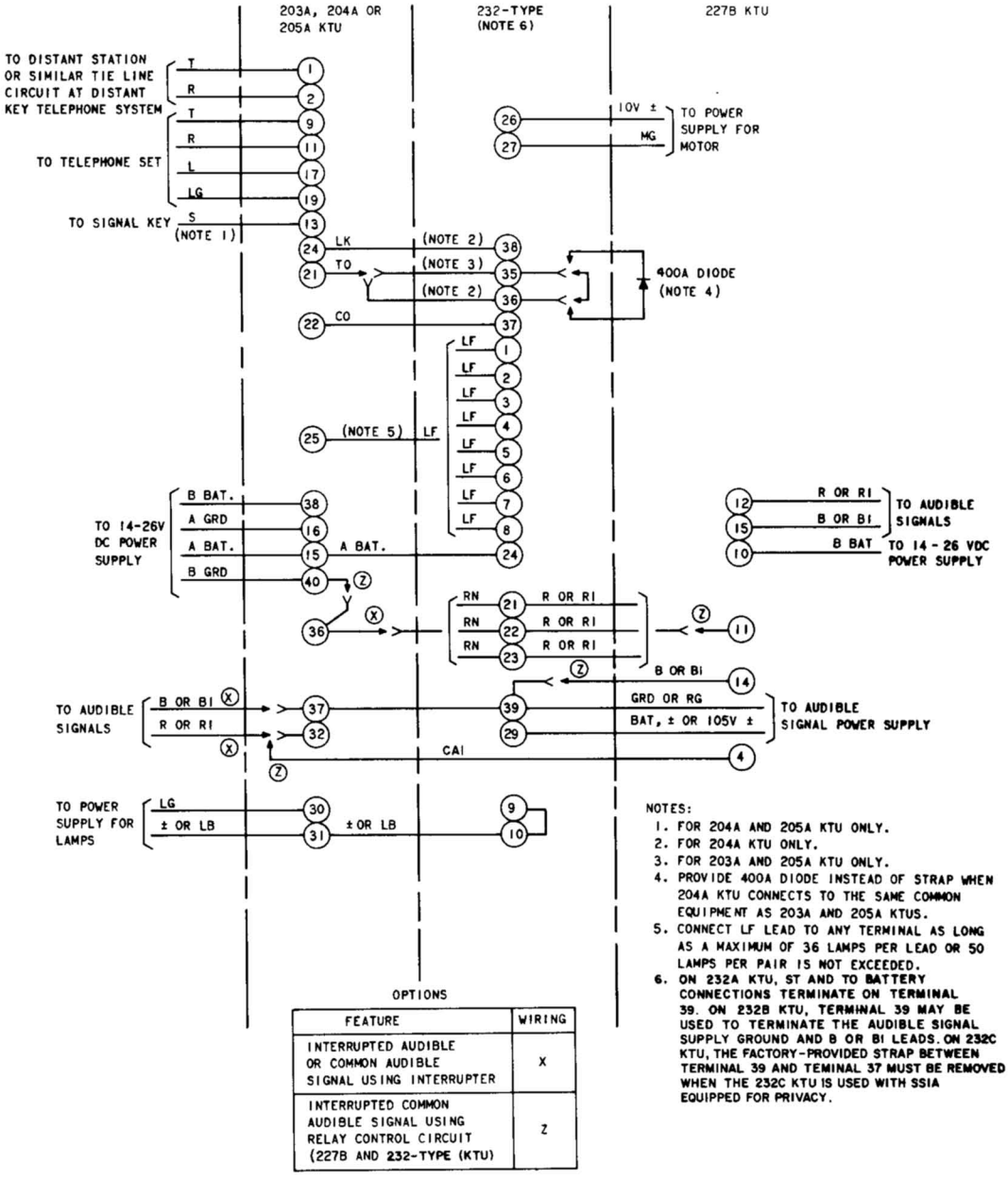

NOTES:
1. FOR 204A AND 205A KTU ONLY.
2. FOR 204A KTU ONLY.
3. FOR 203A AND 205A KTU ONLY.
4. PROVIDE 400A DIODE INSTEAD OF STRAP WHEN 204A KTU CONNECTS TO THE SAME COMMON EQUIPMENT AS 203A AND 205A KTUS.
5. CONNECT LF LEAD TO ANY TERMINAL AS LONG AS A MAXIMUM OF 36 LAMPS PER LEAD OR 50 LAMPS PER PAIR IS NOT EXCEEDED.
6. ON 232A KTU, ST AND TO BATTERY CONNECTIONS TERMINATE ON TERMINAL 39. ON 232B KTU, TERMINAL 39 MAY BE USED TO TERMINATE THE AUDIBLE SIGNAL SUPPLY GROUND AND B OR BI LEADS. ON 232C KTU, THE FACTORY-PROVIDED STRAP BETWEEN TERMINAL 39 AND TEMINAL 37 MUST BE REMOVED WHEN THE 232C KTU IS USED WITH SSIA EQUIPPED FOR PRIVACY.

OPTIONS

FEATURE	WIRING
INTERRUPTED AUDIBLE OR COMMON AUDIBLE SIGNAL USING INTERRUPTER	X
INTERRUPTED COMMON AUDIBLE SIGNAL USING RELAY CONTROL CIRCUIT (227B AND 232-TYPE (KTU)	Z

Fig. 12—Connections for Automatic Tie Line Circuit (203A KTU) or Ringdown Tie Line Circuit (204A KTU) or Station Line Circuit (205A KTU) with 227B and 232-Type KTUs for Interrupted Audible or Common Audible Signals, Line and Busy Lamps, Lamp Wink, and Timeout

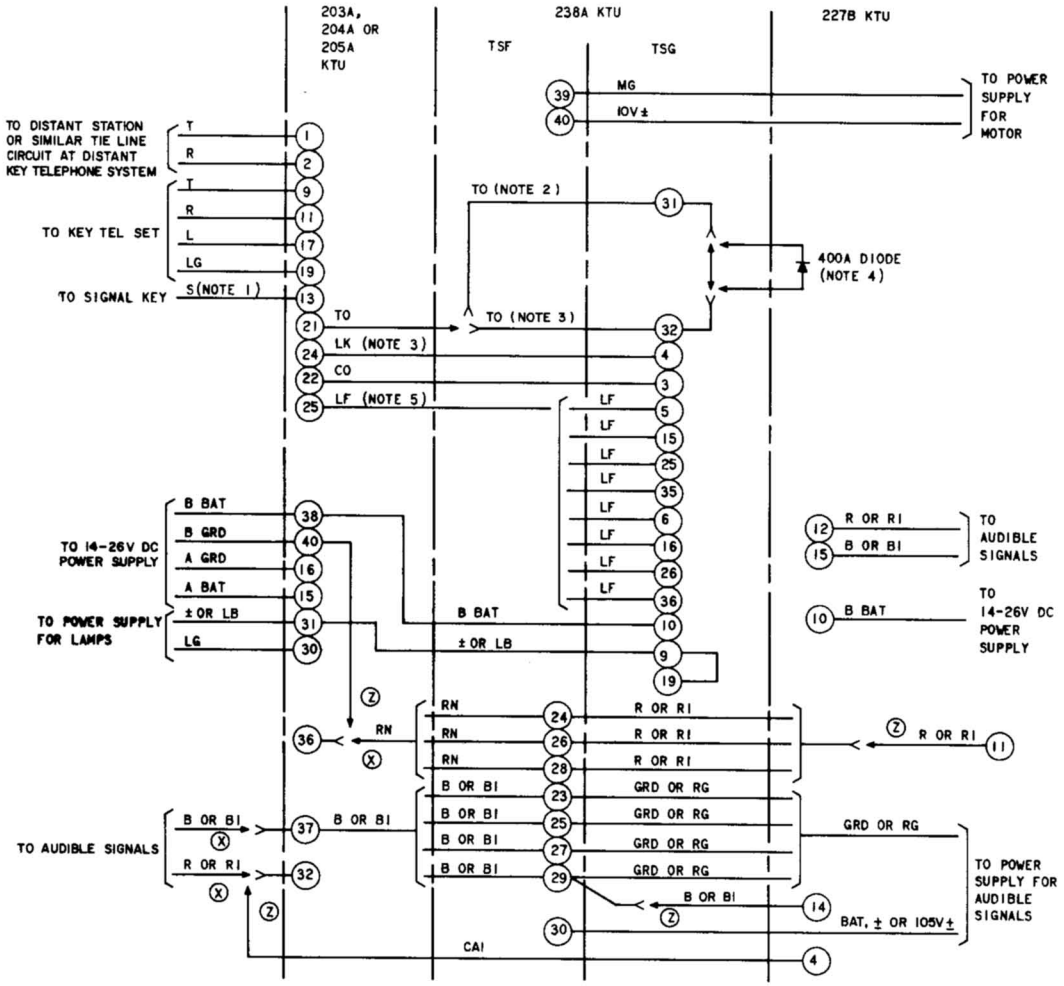

NOTES:

1. FOR 204A AND 205A KTU ONLY.
2. FOR 203A AND 205A KTU ONLY.
3. FOR 204A KTU ONLY.
4. PROVIDE 400A DIODE INSTEAD OF STRAP WHEN 204A KTU CONNECTS TO THE SAME COMMON EQUIPMENT AS 203A AND 205A KTUS.
5. CONNECT LF LEAD TO ANY TERMINAL AS LONG AS A MAXIMUM OF 36 LAMPS PER LEAD OR 50 LAMPS PER PAIR IS NOT EXCEEDED.

OPTIONS

FEATURE	WIRING
INTERRUPTED AUDIBLE OR COMMON AUDIBLE SIGNAL USING INTERRUPTER	X
INTERRUPTED COMMON AUDIBLE SIGNAL USING RELAY CONTROL CIRCUIT (227B KTU)	Z

Fig. 13—Connections for Automatic Tie Line Circuit (203A KTU) or Ringdown Tie Line Circuit (204A KTU) or Station Line Circuit (205A KTU) with only the Common Equipment Part of 238A KTU and 227B KTU for Interrupted Audible or Common Audible Signals, Line and Busy Lamps, Lamp Wink, and Timeout

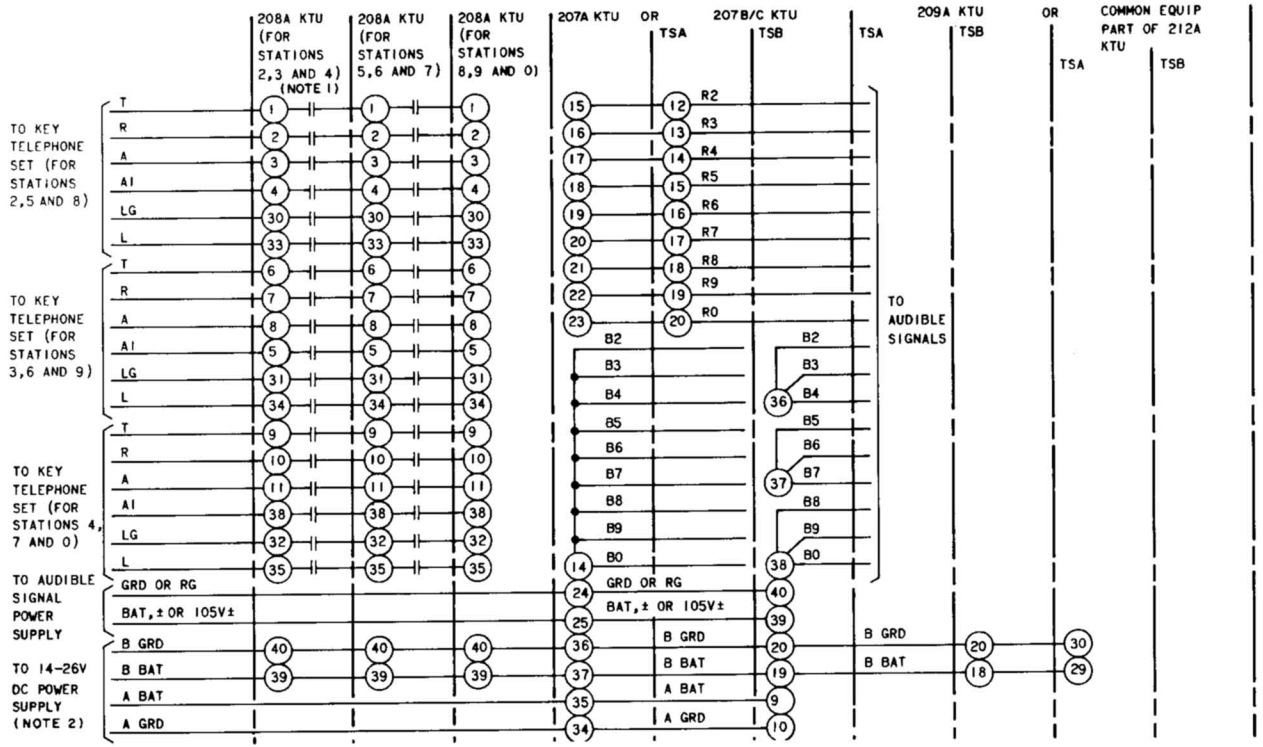

Fig. 14—Connections for Dial Selective Intercom Circuit (207A, B, or C KTU) with 208A and 209A KTUs and only the Common Equipment Part of 212A KTU for Flashing Line Lamps, Busy Lamps, Audible Signals, and Timeout (Sheet 1)

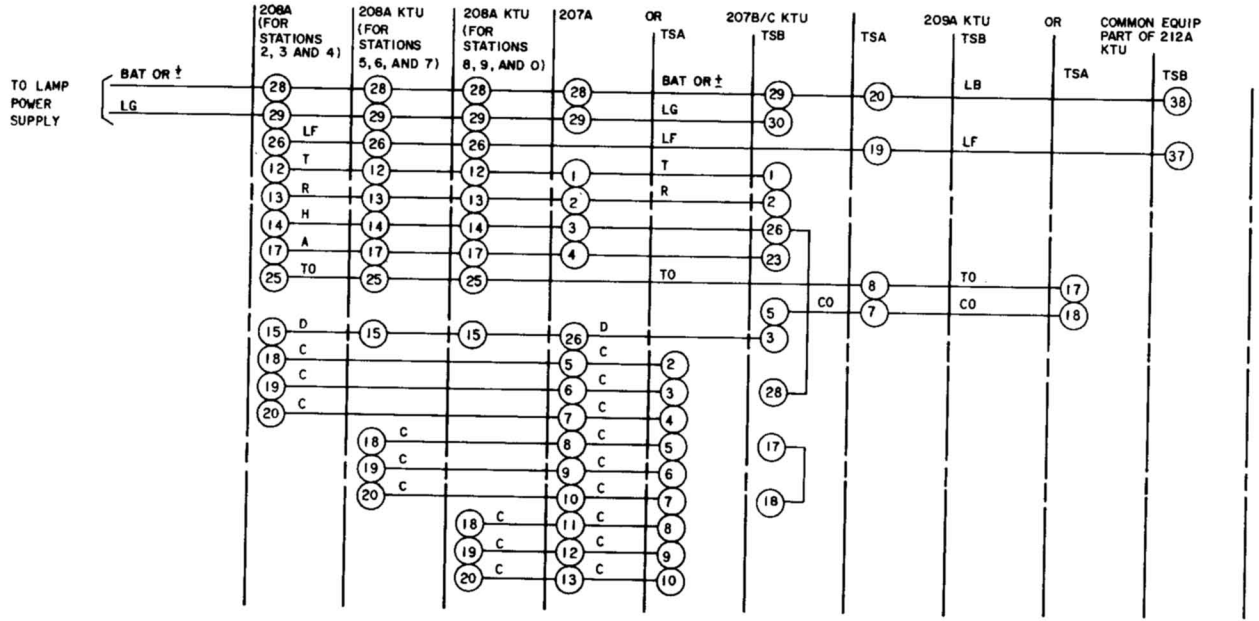

NOTES:

1. SYMBOL (⊣⊢) MEANS DO NOT STRAP ADJACENT TERMINALS. RUN LEADS TO LOCATION INDICATED BY LEGEND.
2. PROPER POLARITY MUST BE OBSERVED WHEN MAKING POWER CONNECTIONS (B BATTERY AND GROUND) TO THE 207-TYPE KTU. REVERSED POLARITY MAY CAUSE THE ELECTROLYTIC CAPACITOR TO EXPLODE.

Fig. 14—Connections for Dial Selective Intercom Circuit (207A, B, or C KTU) with 208A and 209A KTUs and only the Common Equipment Part of 212A KTU for Flashing Line Lamps, Busy Lamps, Audible Signals, and Timeout (Sheet 2)

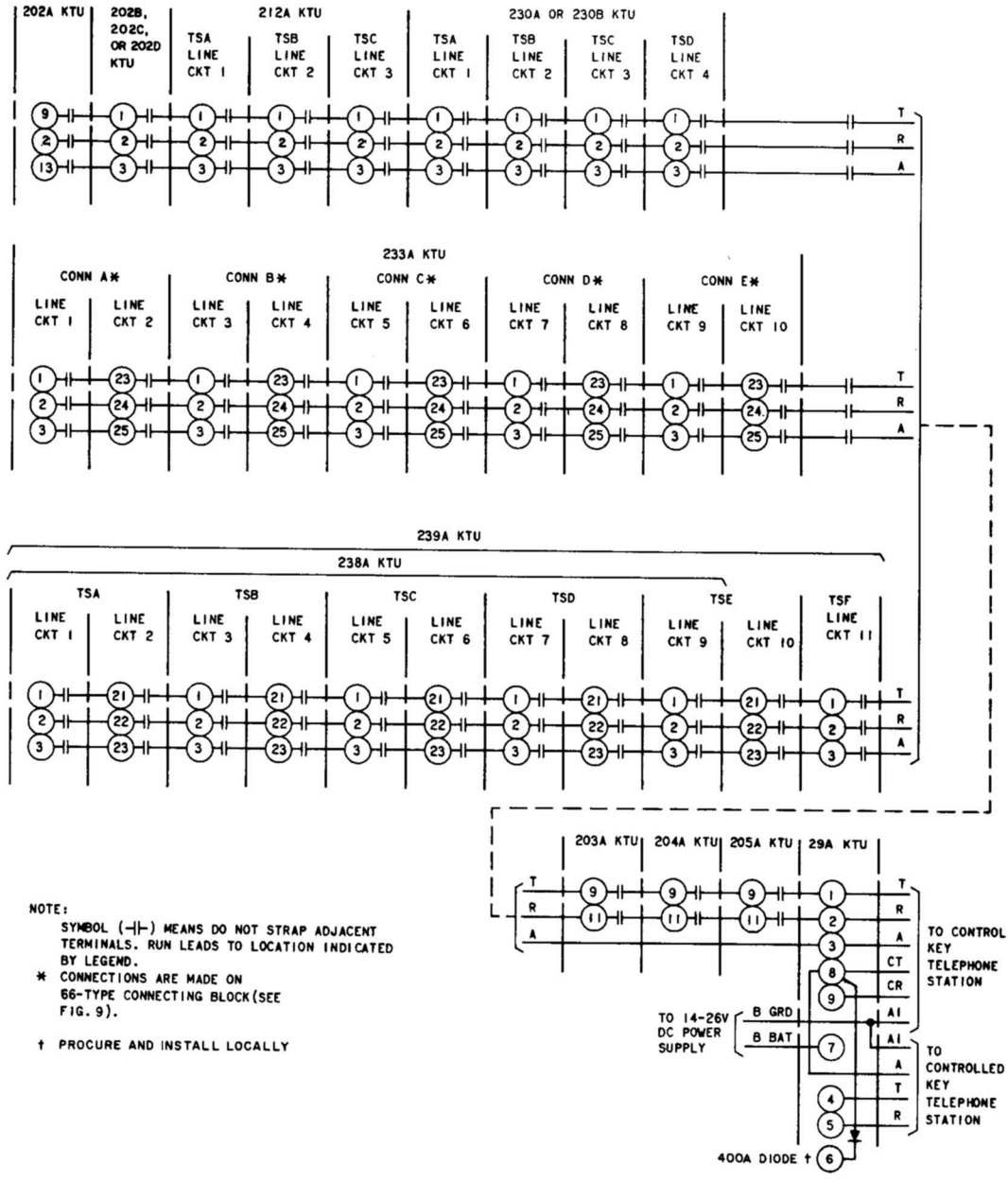

NOTE:

SYMBOL (⊣⊢) MEANS DO NOT STRAP ADJACENT TERMINALS. RUN LEADS TO LOCATION INDICATED BY LEGEND.

* CONNECTIONS ARE MADE ON 66-TYPE CONNECTING BLOCK (SEE FIG. 9).

† PROCURE AND INSTALL LOCALLY

Fig. 15—Connections for Manual Cutoff Circuit (29A KTU) with 202A, B, C, or D, 212A, 230A or B, 233A, 238A, 239A, 203A, 204A, and 205A KTUs

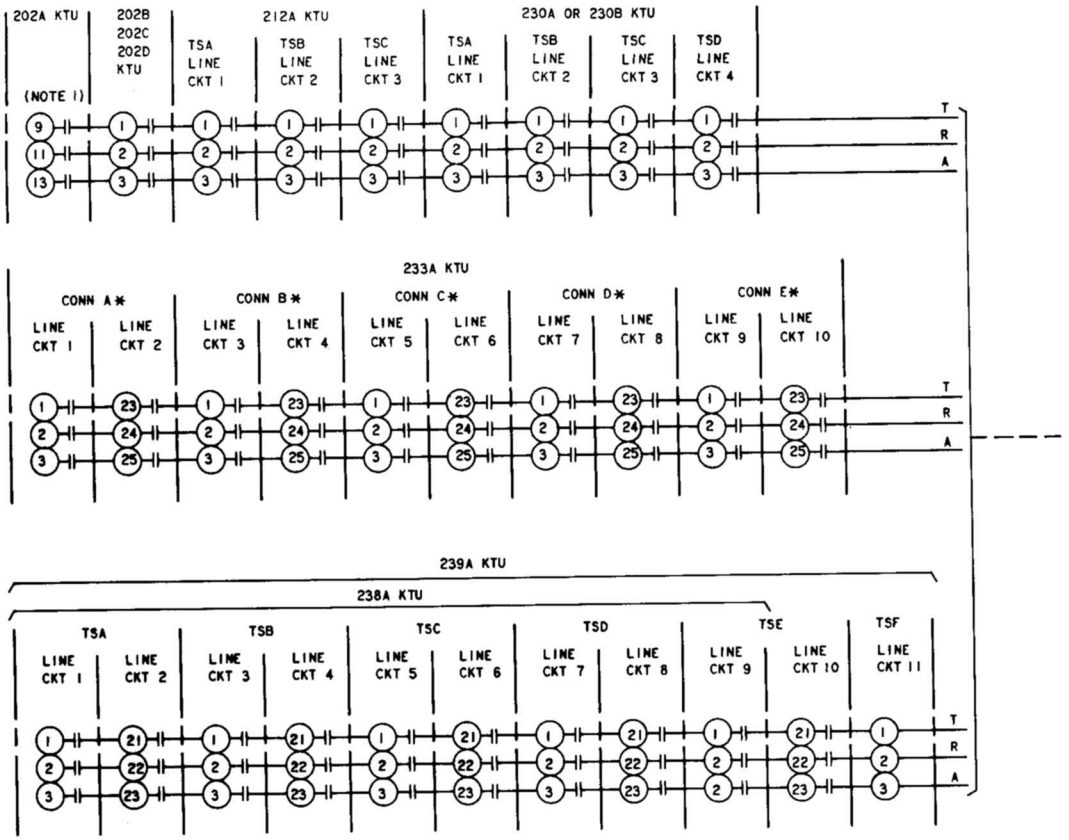

Fig. 16—Connections for Cut-Through and Control Circuit for Automatic Cutoff (26B and 29A KTUs) with 202A, B, C, or D, 212A, 230A or B, 233A, 238A, 239A, 203A, 204A, and 205A KTUs (Sheet 1)

NOTES:

1. SYMBOL (⊣⊢) MEANS DO NOT STRAP ADJACENT TERMINALS. RUN LEADS TO LOCATION INDICATED BY LEGEND.
2. ONE 26B KTU WILL SERVE UP TO FIVE 29A KTUS. CONNECTIONS ARE SHOWN FOR TWO 29A KTUS. SEE INSET FOR CONNECTIONS TO 3RD, 4TH AND 5TH 29A KTU.

* CONNECTIONS ARE MADE ON 66-TYPE CONNECTING BLOCK (SEE FIG. 9).

† APPEARS MORE THAN ONE TIME ON THIS FIGURE.

‡ 400A DIODE, PROCURE AND INSTALL LOCALLY.

OPTIONS

FEATURE		WIRING
CUT THROUGH AND CONTROL CIRCUIT FOR AUTOMATIC CUTOFF CIRCUIT	STATION CAN CUT OFF OTHER STATIONS BUT CANNOT BE CUT OFF	H,J
	STATION CAN CUT OFF OTHER STATIONS AND CAN BE CUT OFF, EXCEPT DURING A CALL.	H,K
	STATION CANNOT CUT OFF OTHER STATIONS AND CAN BE CUT OFF, EXCEPT DURING A CALL	K

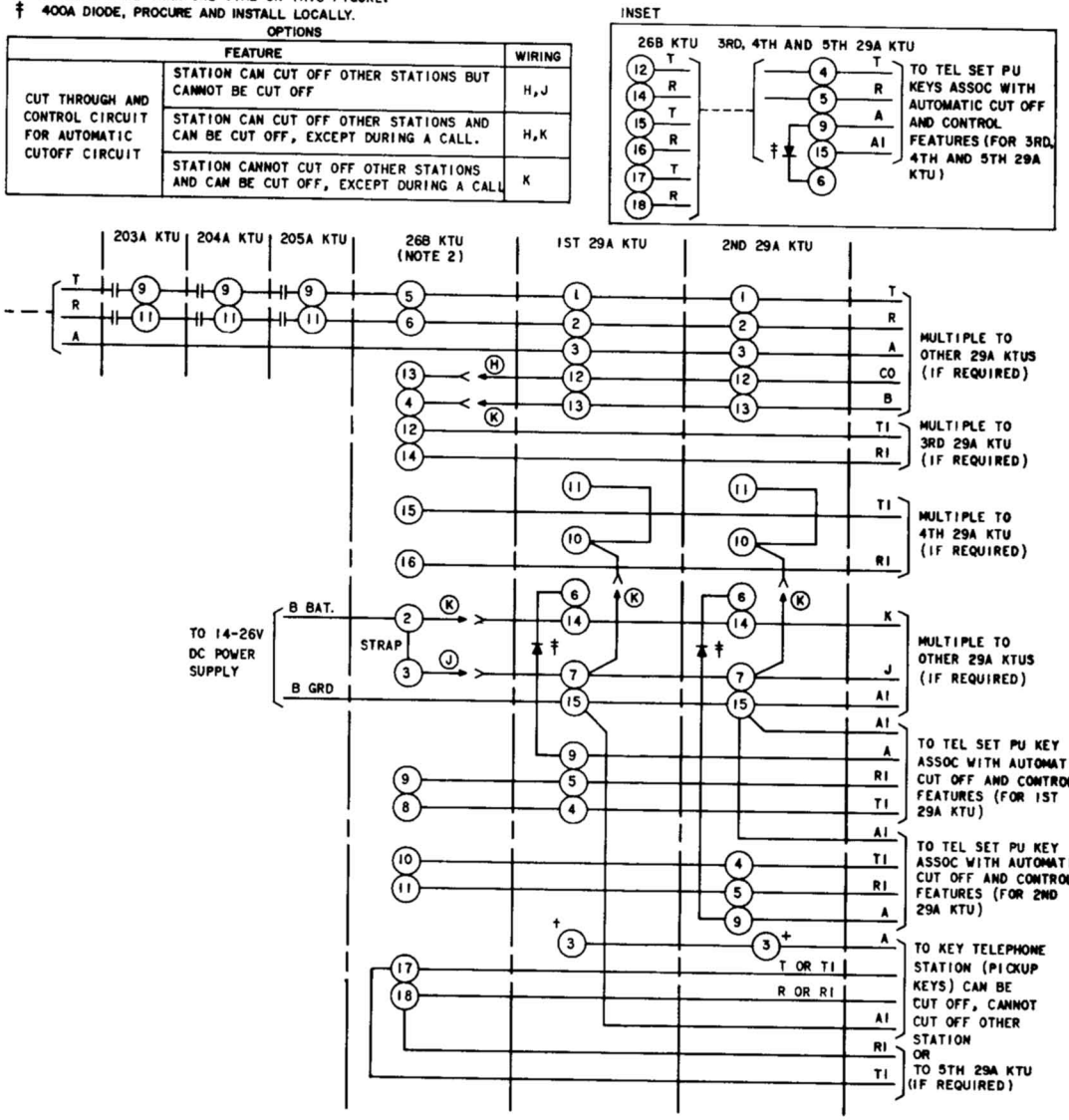

Fig. 16—Connections for Cut-Through and Control Circuit for Automatic Cutoff (26B and 29A KTUs) with 202A, B, C, or D, 212A, 230A or B, 233A, 238A, 239A, 203A, 204A, and 205A KTUs (Sheet 2)

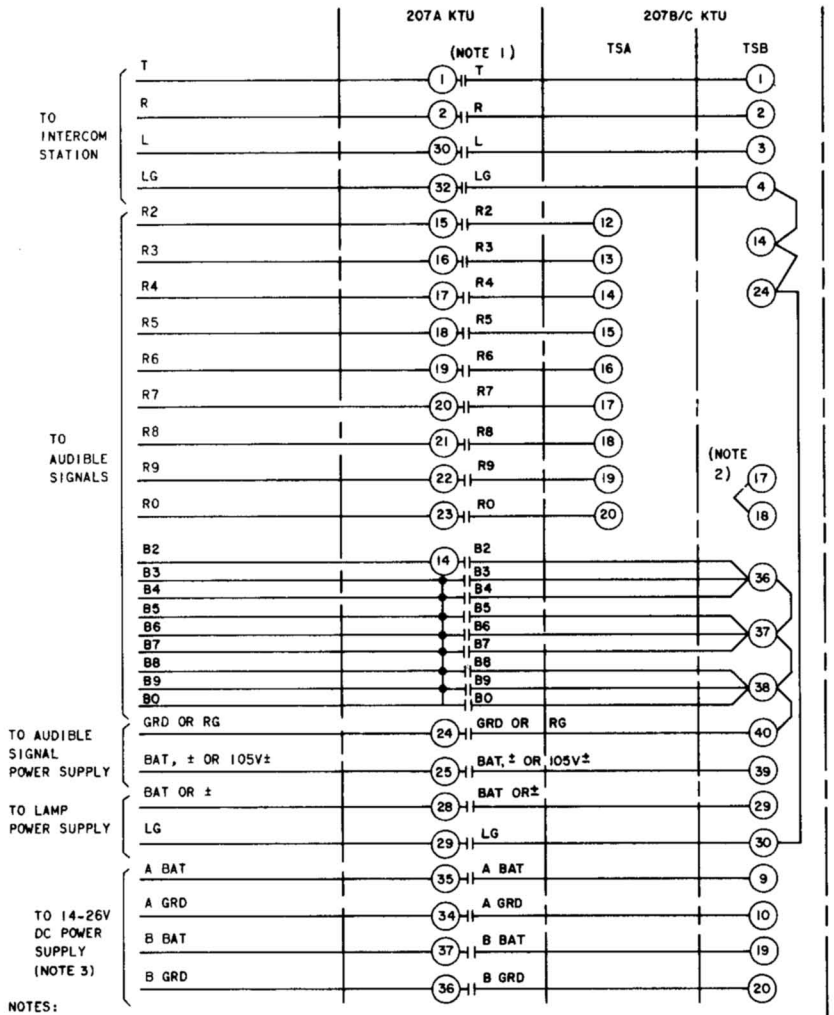

NOTES:

1. SYMBOL ⊣⊢ MEANS DO NOT STRAP ADJACENT TERMINALS. RUN LEADS TO LOCATION INDICATED BY LEGEND.
2. REMOVE STRAP IF MORE THAN 9 STATIONS ARE SERVED.
3. PROPER POLARITY MUST BE OBSERVED WHEN MAKING POWER CONNECTIONS TO THE 207-TYPE KTU. REVERSED POLARITY MAY CAUSE THE ELECTROLYTIC CAPACITOR TO EXPLODE.

Fig. 17—Connections for Dial Selective Intercom Circuit (207A, B or C KTU) with Busy Lamps and Audible Signals

SERVICE

1A1 KEY TELEPHONE SYSTEM

200F, G, AND K PACKAGED KEY TELEPHONE UNITS

1. GENERAL

1.01 This section provides connections for the 200F (MD), 200G (MD) and 200K (MD) type Key Telephone Units.

1.02 Information in this section was formerly contained in Sections 518-210-400, 518-210-401, and 518-210-403, respectively, which are hereby canceled.

1.03 Refer to Division 518, sections entitled: Reference, 1A1, Packaged Key Telephone Units, Identification, and Reference, 1A1, Key Telephone Units, for identification information and functional schematics of the various KTUs.

2. CONNECTIONS

2.01 When 10 volts ac is used for station lamps, the KS-15900, List 1 interrupter may also be operated from the same source. The interrupter motor load is approximately 300 milliamperes. This is equivalent to about eight 51A lamps.

2.02 A J86731D, List 1 power plant is provided in the 200K-type key telephone unit to furnish 10-volt ac power.

2.03 An externally mounted power unit must be provided for the 200F- and G-type KTUs.

2.04 Tables A, B, and C show the running cable connections for the 200F-, G-, and K-type KTUs, respectively.

2.05 Fig. 1 and 2, 3 and 4, and 5 and 6 provide strapping between KTUs and power connections for the 200F-, G-, and K-type KTUs, respectively.

2.06 Table D provides audible and visual signaling options for the 200-type KTUs.

2.07 For further information, refer to CD- and SD-69352-01 for the 200F-, CD- and SD-69353-01 for the 200G- and CD- and SD-69361-01 for the 200K-type KTUs.

© American Telephone and Telegraph Company
Printed in U.S.A.

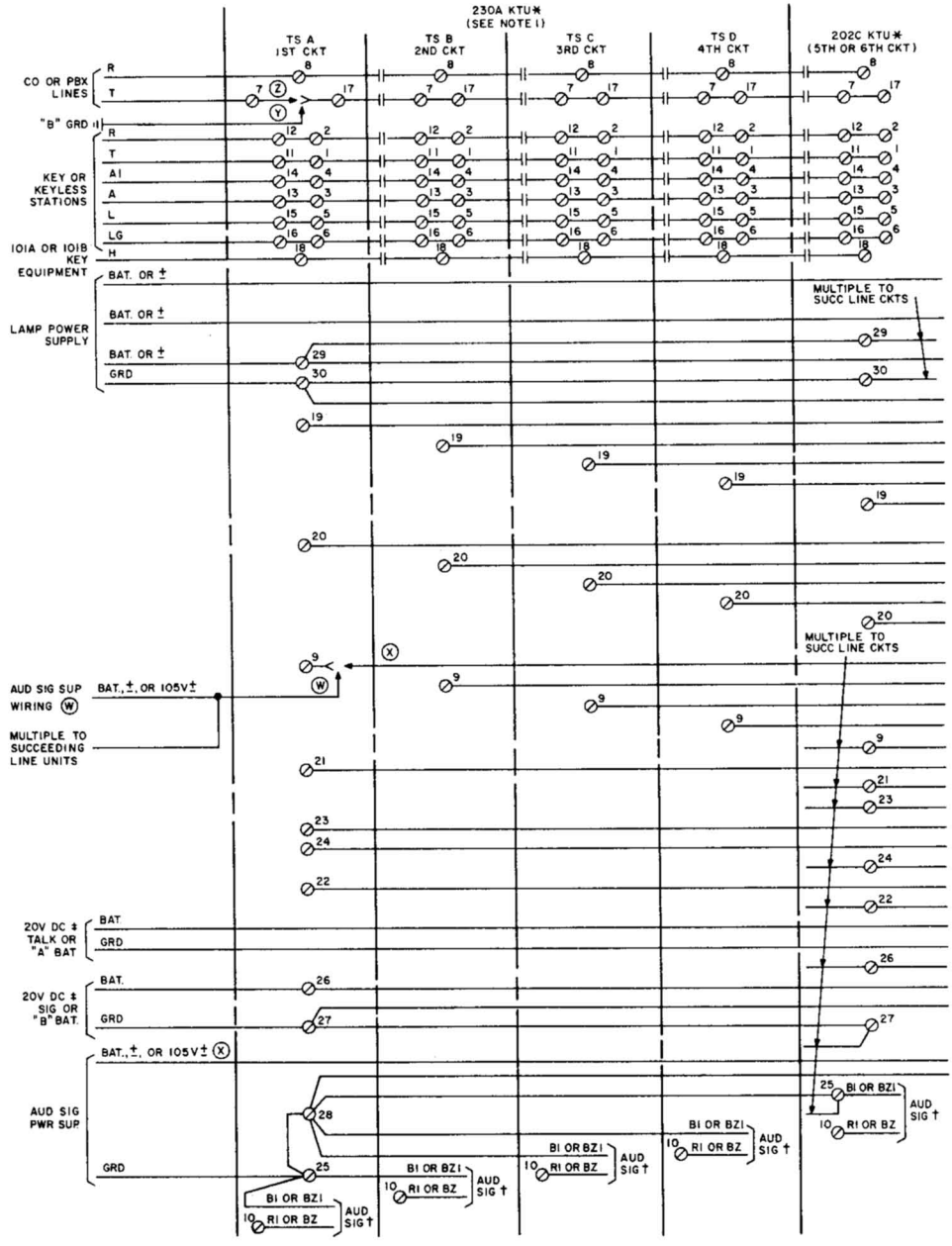

Fig. 1—200F-Type KTU (202C, 230A, 232A, and 207C) Connections and Strappings (Sheet 1)

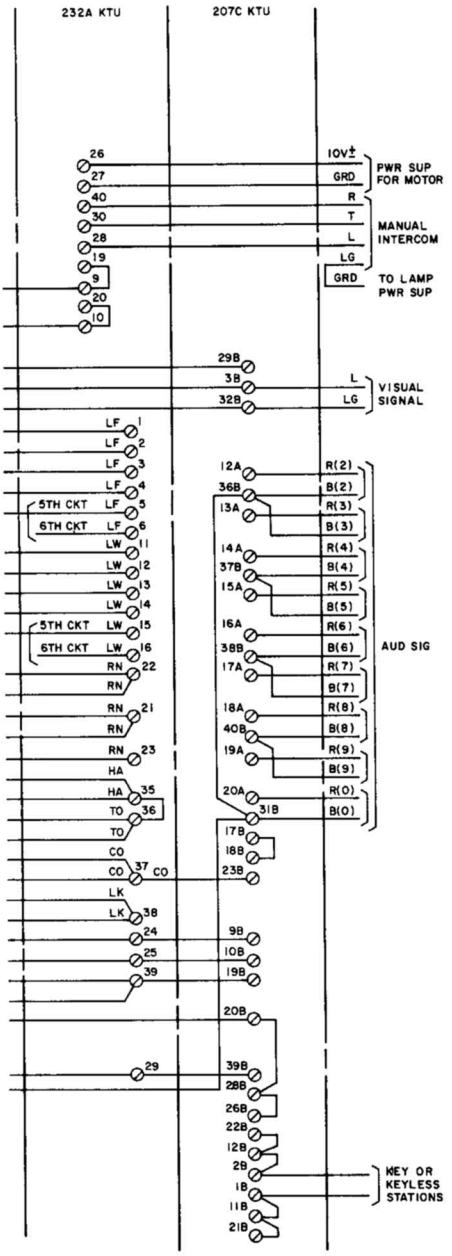

NOTES:

1. SYMBOL (||) MEANS DO NOT STRAP ADJACENT TERMINALS. RUN LEADS TO LOCATION INDICATED BY LEGEND.
2. FOR THE 230A BATTERY AND GROUND ARE TERMINATED ON TERMINAL STRIP A AND STRAPPED INTERNALLY.
3. MAXIMUM 20 LAMPS PER L LEAD
4. WHEN STEADY HOLD LAMP IS REQUIRED INSTEAD OF LAMP WINK PROVIDE STRAPS AS FOLLOWS:
   202C KTU - TERM. 20 AND 29
   230A KTU - TERM. 20 A,B,C,D AND 29A
   CAUTION: IF PACKAGE INTERRUPTER IS USED TO FURNISH LAMP WINK FOR OTHER SYSTEMS, DISCONNECT AND TAPE LW LEADS AT TERM. 20 OF EACH LINE CIRCUIT NOT USING THE WINK FEATURE.

*FURNISHED WIRED FOR METALLIC RINGING AND INTERRUPTED AUDIBLE. CAN BE WIRED FOR GROUNDED RINGING, AND STEADY AUDIBLE SEE SECTION ENTITLED "REFERENCE-IAI KEY TELEPHONE UNITS".

†FOR COMMON AUDIBLE, STRAP ALL NO. 10 TERMINALS.

‡A AND B GROUNDS MUST BE CONNECTED TOGETHER AT POWER SUPPLY.

Fig. 1—200F-Type KTU (202C, 230A, 2232A, and 207C) Connecting and Strappings (Sheet 2)

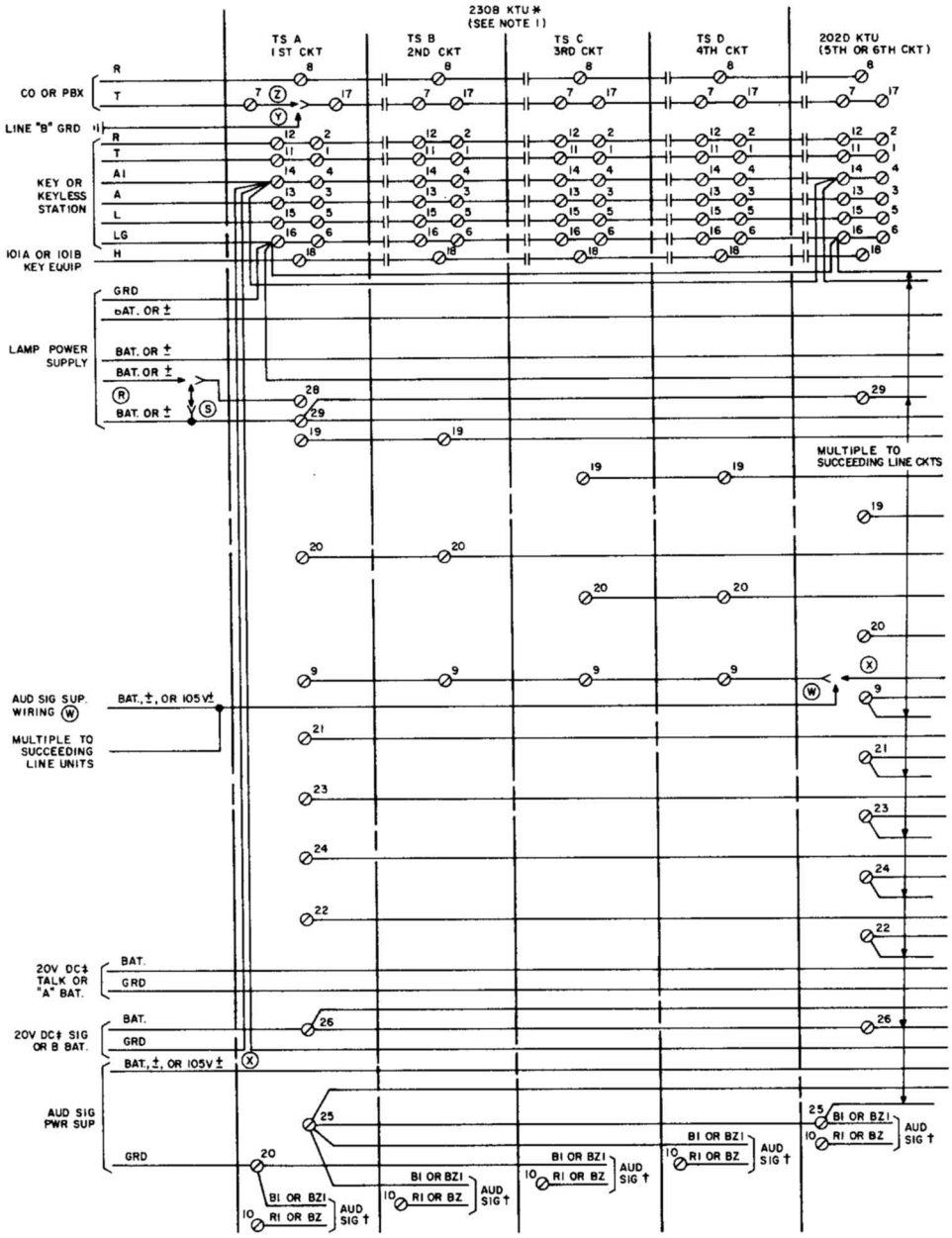

Fig. 2—200F-Type KTU (202D, 230B, 232B, and 207C) Connections and Strappings (Sheet 1)

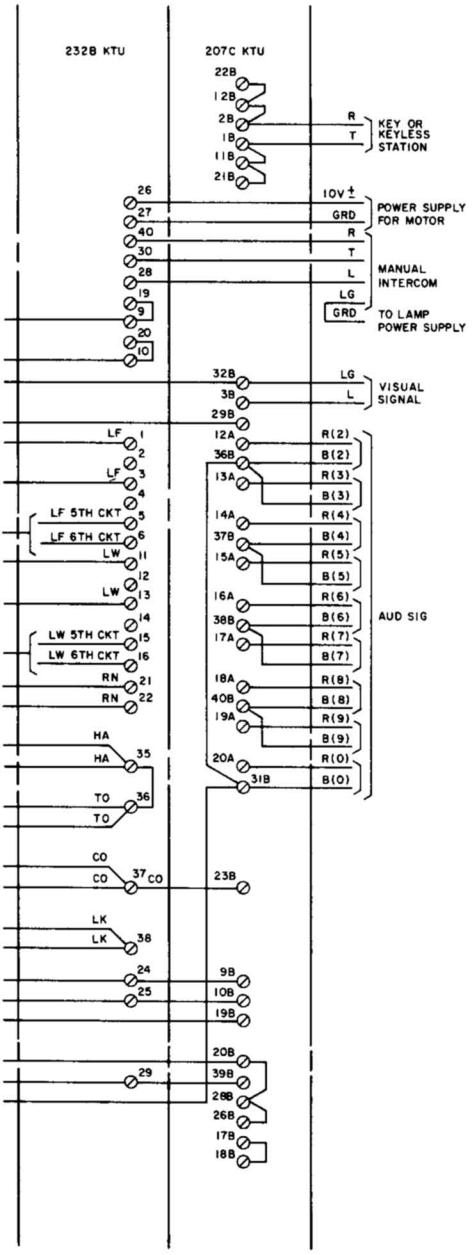

NOTES:

1. SYMBOL (||) MEANS DO NOT STRAP ADJACENT TERMINALS. RUN LEADS TO LOCATION INDICATED BY LEGEND.
2. FOR THE 230BKTU BATTERY AND GROUND TERMINATED ON TERMINAL STRIP A AND STRAPPED INTERNALLY.
3. MAXIMUM 20 LAMPS PER L LEAD.
4. WHEN STEADY HOLD LAMP IS REQUIRED INSTEAD OF LAMP WINK, PROVIDE STRAPS AS FOLLOWS:
   - 202D KTU - TERM. 20 AND 29
   - 230B KTU - TERM. 20 A,B, AND 29A
     TERM. 20 C,D AND 28A
   - CAUTION: IF PACKAGE INTERRUPTER IS USED TO FURNISH LAMP WINK FOR OTHER SYSTEMS, DISCONNECT AND TAPE LW LEADS AT TERMINAL 20 OF EACH LINE CIRCUIT NOT USING THE WINK FEATURE.

* FURNISHED WIRED FOR METALLIC AND INTERRUPTED AUDIBLE. CAN BE WIRED FOR GROUNDED RINGING AND STEADY AUDIBLE. SEE SECTION ENTITLED "REFERENCE-IAI KEY TELEPHONE UNITS"

† FOR COMMON AUDIBLE, STRAP ALL NO. 10 TERMINALS

‡ A AND B GROUNDS MUST BE CONNECTED TOGETHER AT POWER SUPPLY.

Fig. 2—200F-Type KTU (202D, 230B, 232B, and 207C) Connections and Strappings (Sheet 2)

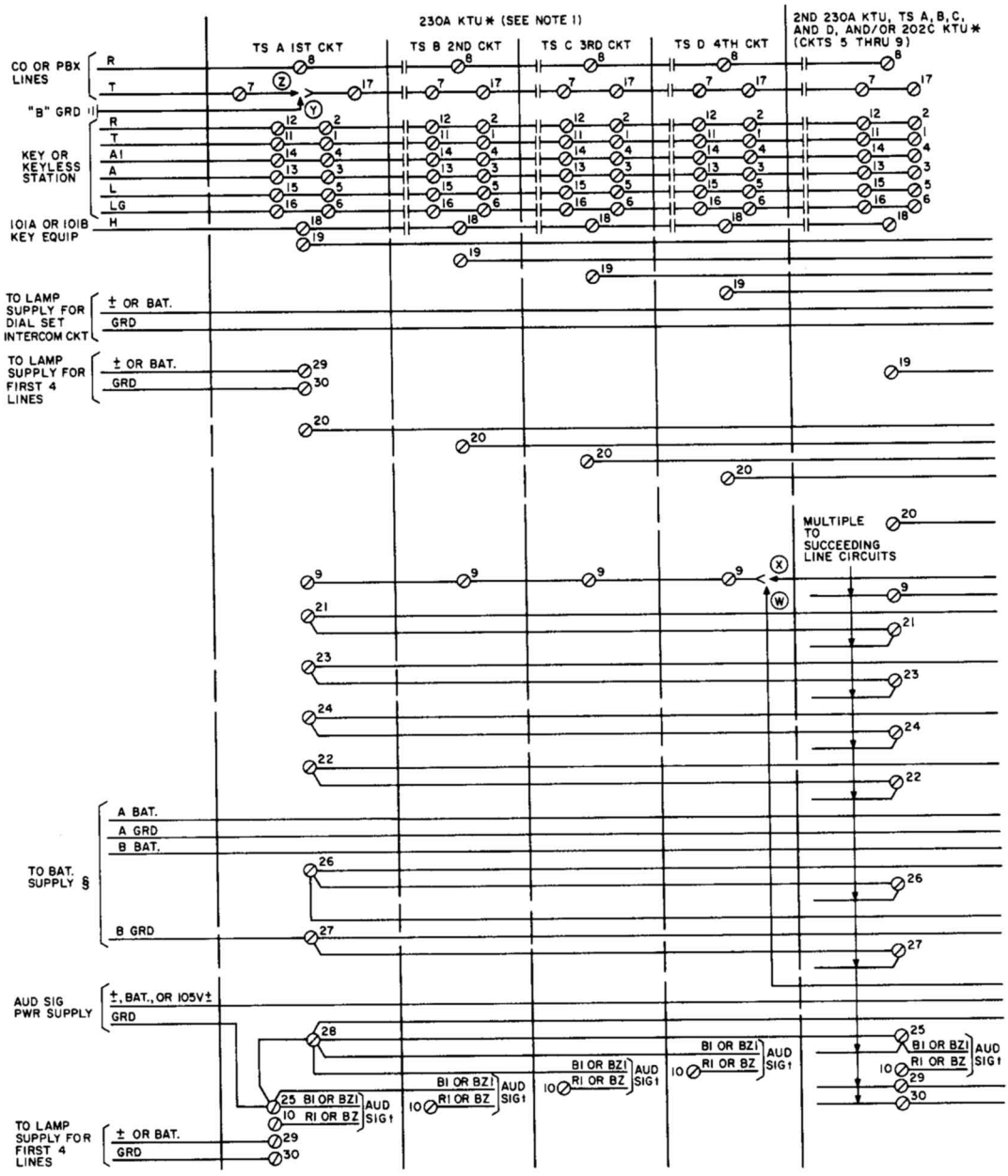

Fig. 3—200G-Type KTU (202C, 230A, 232A, and 207C) Connections and Strappings (Sheet 1)

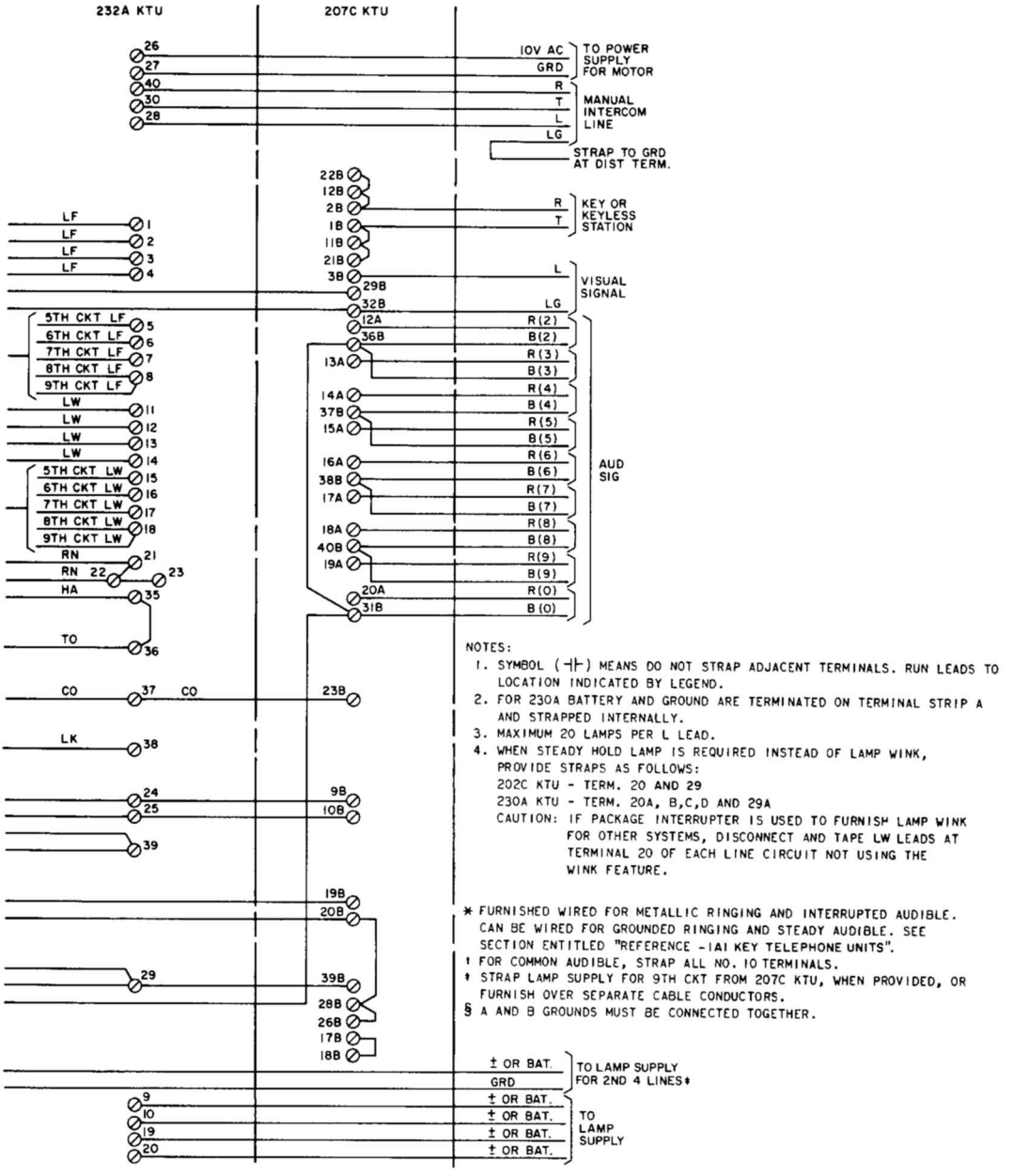

Fig. 3—200G-Type KTU (202C, 230A, 232A, and 207C) Connections and Strappings (Sheet 2)

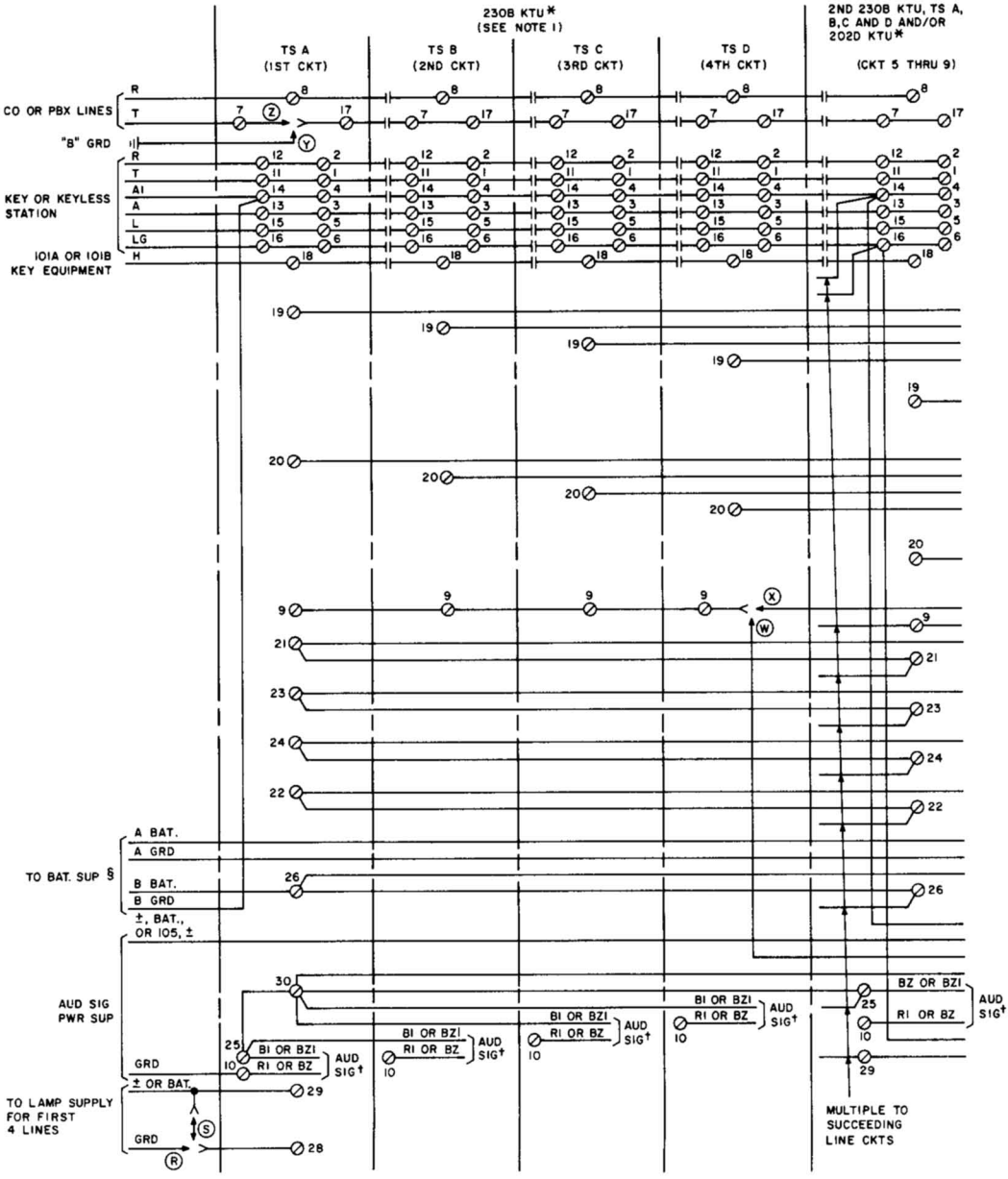

Fig. 4—200G-Type KTU (202D, 230B, 232B, and 207C) Connections and Strappings (Sheet 1)

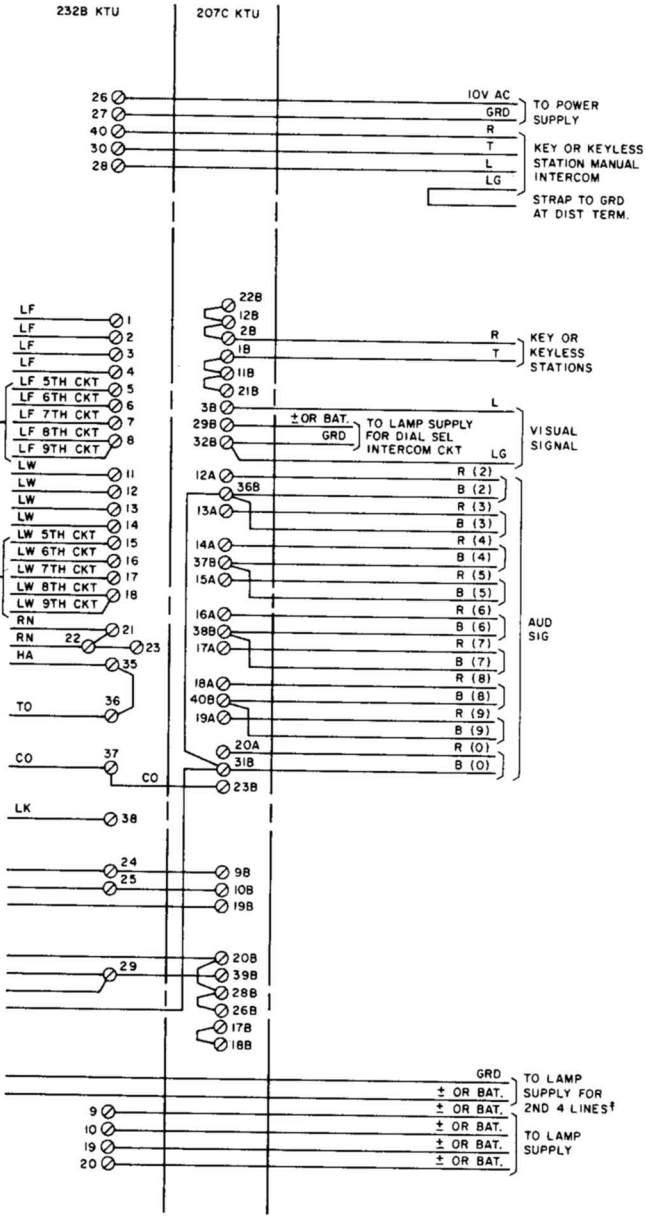

NOTES:

1. SYMBOL (11) MEANS DO NOT STRAP ADJACENT TERMINALS. RUN LEADS TO LOCATION INDICATED BY LEGEND.
2. ON 230B BATTERY AND GROUND ARE TERMINATED ON TERMINAL STRIP A AND STRAPPED INTERNALLY.
3. MAXIMUM 20 LAMPS PER L LEAD.
4. WHEN STEADY HOLD LAMP IS REQUIRED INSTEAD OF LAMP WINK, PROVIDE STRAPS AS FOLLOWS:
   202D KTU - TERM. 20 AND 29
   230B KTU - TERM. 20A, B AND 29A
   TERM. 20C,D AND 28A
   CAUTION: IF PACKAGE INTERRUPTER IS USED TO FURNISH LAMP WINK FOR OTHER SYSTEMS, DISCONNECT AND TAPE LW LEADS AT TERMINAL 20 OF EACH LINE CIRCUIT NOT USING THE WINK FEATURE.

* FURNISHED WIRED FOR METALLIC RINGING AND INTERRUPTED AUDIBLE. CAN BE WIRED FOR GROUNDED RINGING, AND STEADY AUDIBLE SEE SECTION ENTITLED "REFERENCE-IAI KEY TELEPHONE UNITS".

† FOR COMMON AUDIBLE, STRAP ALL NO. 10 TERMINALS.

‡ STRAP LAMP SUPPLY FOR 9TH CKT FROM 207C KTU, WHEN PROVIDED, OR FURNISH OVER SEPARATE CABLE CONDUCTORS.

§ A AND B GROUNDS MUST BE CONNECTED TOGETHER.

Fig. 4—200G-Type KTU (202D, 230B, 232B, and 207C) Connections and Strappings (Sheet 2)

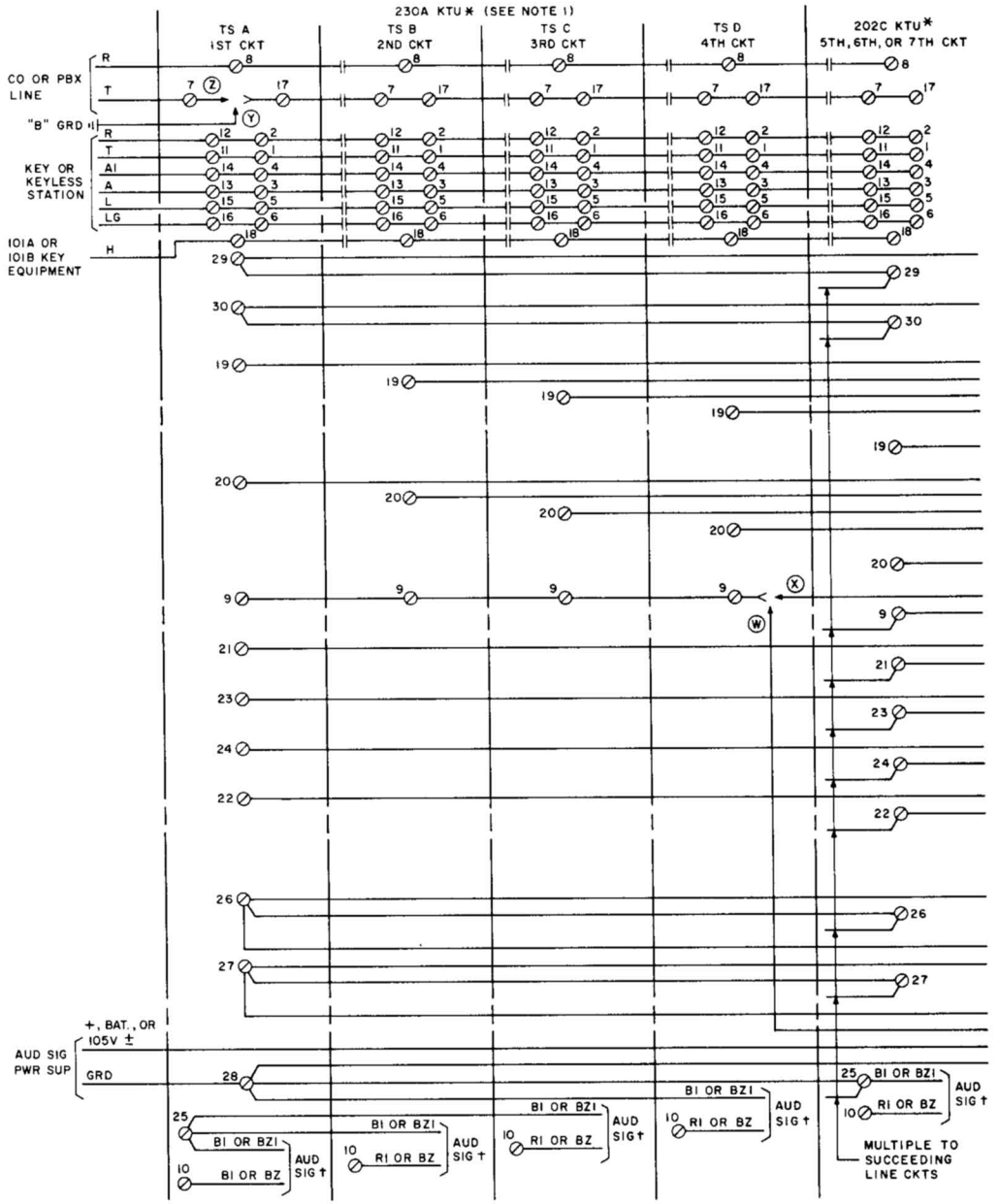

Fig. 5—200K-Type KTU (202C, 230A, 232A, and 207C) Connections and Strappings (Sheet 1)

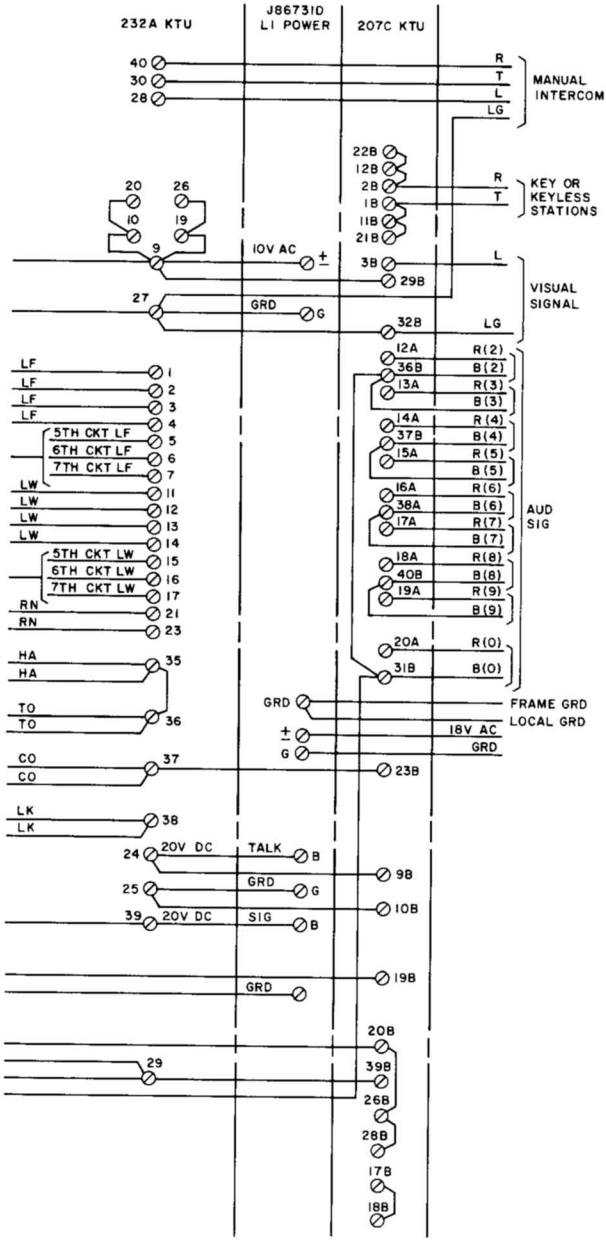

NOTES:

1. SYMBOL (||) MEANS DO NOT STRAP ADJACENT TERMINALS. RUN LEADS TO LOCATION INDICATED BY LEGEND
2. FOR 230A BATTERY AND GROUND ARE TERMINATED ON TERMINAL STRIP A AND STRAPPED INTERNALLY.
3. MAXIMUM 20 LAMPS PER L LEAD
4. WHEN STEADY HOLD LAMP IS REQUIRED INSTEAD OF LAMP WINK. PROVIDE STRAPS AS FOLLOWS:
   202C KTU TERM. 20 AND 29.
   230A KTU TERM. 20A, B, C, D AND 29A
   CAUTION: IF PACKAGE INTERRUPTER IS USE TO FURNISH LAMP WINK FOR OTHER SYSTEMS, DISCONNECT AND TAPE LW LEADS AT TERMINAL 20 OF EACH LINE CIRCUIT NOT USING THE WINK FEATURE

* FURNISHED WIRED FOR METALLIC RINGING AND INTERRUPTED AUDIBLE. CAN BE WIRED FOR GROUNDED RINGING AND STEADY AUDIBLE. SEE SECTION ENTITLED "REFERENCE-IAI KEY TELEPHONE UNITS".

† FOR COMMON AUDIBLE, STRAP ALL NO. 10 TERMINALS.

Fig. 5—200K-Type KTU (202C, 230A, 232A, and 207C) Connections and Strappings (Sheet 2)

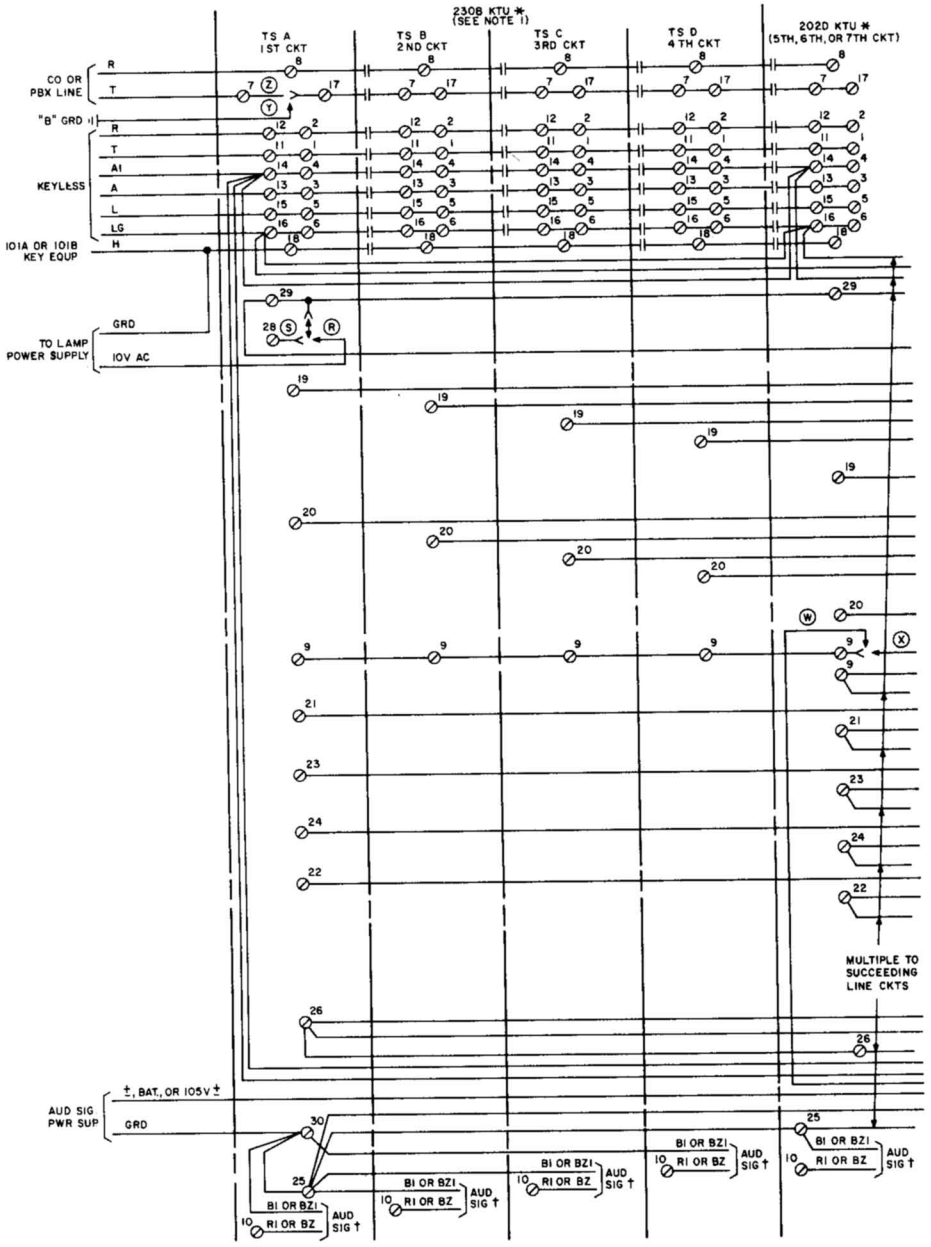

Fig. 6—200K-Type KTU (202D, 230B, 232B, and 207C) Connections and Strappings (Sheet 1)

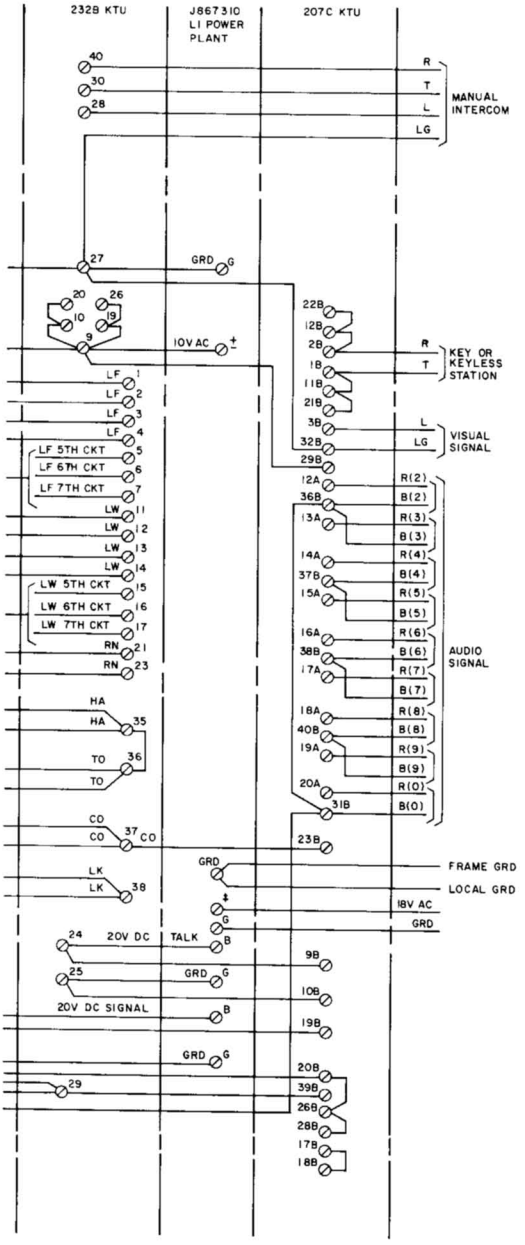

NOTES:

1. SYMBOL (||) MEANS DO NOT STRAP ADJACENT TERMINALS. RUN LEADS TO LOCATION INDICATED BY LEGEND.
2. FOR 230B BATTERY AND GROUND ARE TERMINATED ON TERMINAL STRIP A AND STRAPPED INTERNALLY
3. MAXIMUM 20 LAMPS PER L LEAD
4. WHEN STEADY HOLD LAMP IS REQUIRED INSTEAD OF LAMP WINK, PROVIDE STRAPS AS FOLLOWS:
   202D KTU - TERM. 20 AND 29
   230B KTU - TERM. 20 A,B, AND 29A
   TERM. 20 C,D, AND 28A

   CAUTION: IF PACKAGE INTERRUPTER IS USED TO FURNISH LAMP WINK FOR OTHER SYSTEMS, DISCONNECT AND TAPE LW LEADS AT TERMINAL 20 OFEACH LINE CIRCUIT NOT USING THE WINK FEATURE.

* FURNISHED WIRED FOR METALLIC RINGING AND INTERRUPTED AUDIBLE. CAN BE WIRED FOR GROUNDED RINGING AND STEADY AUDIBLE. SEE SECTION ENTITLED "REFERENCE-IAI KEY TELEPHONE UNITS"

† FOR COMMON AUDIBLE, STRAP ALL NO. 10 TERMINALS

Fig. 6—200K-Type KTU (202D, 230B, 232B, and 207C) Connections and Strappings (Sheet 2)

TABLE A
200F-TYPE KTU — CONNECTIONS

FEATURE		LEAD DESIGNATION	64A1-50 CABLE TERMINAL: 30-TYPE CONN BLOCK TERMINAL	64A1-50 CABLE TERMINAL: INSIDE WIRING CABLE BLUE BINDER	TERMINAL ON 232A OR B KTU*	TERMINAL ON KTU: 230A	TERMINAL ON KTU: 230B†	TERMINAL ON 202C OR D KTU		TERMINAL ON 207C KTU
Key or Keyless Stations	Line 1	T	1T	(W-BL) [W]		1A-11A				
		R	1R	(BL-W) [BL]		2A-12A				
		A	2T	(W-O) [W]		3A-13A				
		A1	2R	(O-W) [O]		4A-14A				
		LG	3T	(W-G) [W]		6A-16A				
		L	3R	(G-W) [G]		5A-15A				
	Line 2	T	4T	(W-BR) [W]		1B-11B				
		R	4R	(BR-W) [BR]		2B-12B				
		A	5T	(W-S) [W]		3B-13B				
		A1	5R	(S-W) [S]		4B-14B				
		LG	6T	(R-BL) [R]		6B-16B				
		L	6R	(BL-R) [BL]		5B-15B				
	Line 3	T	7T	(R-O) [R]		1C-11C				
		R	7R	(O-R) [O]		2C-12C				
		A	8T	(R-G) [R]		3C-13C				
		A1	8R	(G-R) [G]		4C-14C				
		LG	9T	(R-BR) [R]		6C-16C				
		L	9R	(BR-R) [BR]		5C-15C				
	Line 4	T	10T	(R-S) [R]		1D-11D				
		R	10R	(S-R) [S]		2D-12D				
		A	11T	(BK-BL) [BK]		3D-13D				
		A1	11R	(BL-BK) [BL]		4D-14D				
		LG	12T	(BK-O) [BK]		6D-16D				
		L	12R	(O-BK) [O]		5D-15D				
	Line 5	T	13T	(BK-G) [BK]				1-11	1st	
		R	13R	(G-BK) [G]				2-12		
		A	14T	(BK-BR) [BK]				3-13		
		A1	14R	(BR-BK) [BR]				4-14		
		LG	15T	(BK-S) [BK]				6-16		
		L	15R	(S-BK) [S]				5-15		
	Line 6	T	16T	(Y-BL) [Y]				1-11	2nd	
		R	16R	(BL-Y) [BL]				2-12		
		A	17T	(Y-O) [Y]				3-13		
		A1	17R	(O-Y) [O]				4-14		
		LG	18T	(Y-G) [Y]				6-16		
		L	18R	(G-Y) [G]				5-15		
Motor Supply		GRD	19T	(Y-BR) [Y]	27					
		10V ±	19R	(BR-Y) [BR]	26					
Spare			20T	(Y-S) [Y]						
			20R	(S-Y) [S]						
Lamp Supply		± or BAT.	21T‡	(V-BL) [V]	9					
		± or BAT.	21R‡	(BL-V) [BL]	10					
		GRD	22T	(V-O) [V]		30A	6A			
		± or BAT.	22R‡	(O-V) [O]		29A	29A			
Audible Signal Supply		GRD	23T	(V-G) [V]		25A	30A			
		BAT.,±, or 105V ±	23R	(G-V) [G]	29					
20V DC Talk or A Battery		GRD	24T	(V-BR) [V]	25					
		BAT.	24R	(BR-V) [BR]	24					
20V DC Signal or B Battery		GRD	25T	(V-S) [V]		27A	4A			
		BAT.	25R	(S-V) [S]		26A	26A			

* The 232B KTU is arranged internally to disable time-out feature when BF relay is operated.
† The 230B KTU is arranged for individual fusing of circuits 1 and 2 and circuits 3 and 4 lamp input power.
‡ With 1 to 72 lamps, strap 21R, 21T, and 22R; with 73 to 144 lamps, strap 21R and 22R and run separate power lead to 21T.
( ) Current Color Code.
[ ] MD Color Code.

TABLE A (Cont)
200F-TYPE KTU — CONNECTIONS

FEATURE		LEAD DESIGNATION	64A1-50 CABLE TERMINAL		TERMINAL ON 232A OR B KTU*	TERMINAL ON KTU		TERMINAL ON 202C OR D KTU		TERMINAL ON 207C KTU
			30-TYPE CONN BLOCK TERMINAL	INSIDE WIRING CABLE ORANGE BINDER		230A	230B†			
	Manual Intercom Line	T	26T	(W-BL) [W]	30					
		R	26R	(BL-W) [BL]	40					
		LG	27T*	(W-O) [W]	†					
		L	27R	(O-W) [O]	28					
Audible Signal	Line 1	B1 or BZ1	28T	(W-G) [W]		25A	30A			
		R1 or BZ	28R	(G-W) [G]		10A	10A			
	Line 2	B1 or BZ1	29T	(W-BR) [W]		25A				
		R1 or BZ	29R	(BR-W) [BR]		10B				
		B1 or BZ1	30T	(W-S) [W]		28A	30A			
		R1 or BZ	30R	(S-W) [S]		10C	10C			
	Line 4	B1 or BZ1	31T	(R-BL) [R]		28A	25A			
		R1 or BZ	31R	(BL-R) [BL]		10D	10D			
	Line 5	B1 or BZ1	32T	(R-O) [R]				25	1st	
		R1 or BZ	32R	(O-R) [O]				10		
	Line 6	B1 or BZ1	33T	(R-G) [R]				25	2nd	
		R1 or BZ	33R	(G-R) [G]				10		
	Dial Selective Intercom Line	T	34T	(R-BR) [R]						1B-11B-21B
		R	34R	(BR-R) [BR]						2B-12B-22B
		LG	35T	(R-S) [R]						32B
		L	35R	(S-R) [S]						3B
		B(2)	36T	(BK-BL) [BK]						36B
		R(2)	36R	(BL-BK) [BL]						12A
		B(3)	37T	(BK-O) [BK]						36B
		R(3)	37R	(O-BK) [O]						13A
		B(4)	38T	(BK-G) [BK]						37B
		R(4)	38R	(G-BK) [G]						14A
		B(5)	39T	(BK-BR) [BK]						37B
		R(5)	39R	(BR-BK) [BR]						15A
		B(6)	40T	(BK-BL) [BK]						38B
		R(6)	40R	(BL-BK) [BL]						16A
		B(7)	41T	(Y-BL) [Y]						38B
		R(7)	41R	(BL-Y) [BL]						17A
		B(8)	42T	(Y-O) [Y]						40B
		R(8)	42R	(O-Y) [O]						18A
		B(9)	43T	(Y-G) [Y]						40B
		R(9)	43R	(G-Y) [G]						19A
		B(0)	44T	(Y-BR) [Y]						31B
		R(0)	44R	(BR-Y) [BR]						20A
CO or PBX	Line 1	T	45T	(Y-S) [Y]		7A				
		R	45R	(S-Y) [S]		8A				
	Line 2	T	46T	(V-BL) [V]		7B				
		R	46R	(BL-V) [BL]		8B				
	Line 3	T	47T	(V-O) [V]		7C				
		R	47R	(O-V) [O]		8C				
	Line 4	T	48T	(V-G) [V]		7D				
		R	48R	(G-V) [G]		8D				
	Line 5	T	49T	(V-BR) [V]				7	1st	
		R	49R	(BR-V) [BR]				8		
	Line 6	T	50T	(V-S) [V]				7	2nd	
		R	50R	(S-V) [S]				8		

* Strap to 22T or terminate LG lead to lamp ground if cable terminal is not provided.
† Not terminated.
( ) Current Color Code.
[ ] MD Color Code.

TABLE B

200G-TYPE KTU — CONNECTIONS

FEATURE	LEAD DESIGNATION	64B1-75 CABLE TERMINAL		TERMINAL* ON KTU		TERMINAL† ON KTU			TERMINAL‡ ON KTU			TERMINAL ON 207C KTU
		TERMINAL STRIP A	INSIDE WIRING CABLE BLUE BINDER	232A	232B	230A	230B		202C	202D		
Line 1	T	1	(W-BL) [W]			1A-11A		1st				
	R	2	(BL-W) [BL]			2A-12A						
	A	3	(W-O) [W]			3A-13A						
	A1	4	(O-W) [O]			4A-14A						
	LG	5	(W-G) [W]			6A-16A						
	L	6	(G-W) [G]			5A-15A						
Line 2	T	7	(W-BR) [W]			1B-11B						
	R	8	(BR-W) [BR]			2B-12B						
	A	9	(W-S) [W]			3B-13B						
	A1	10	(S-W) [S]			4B-14B						
	LG	11	(R-BL) [R]			6B-16B						
	L	12	(BL-R) [BL]			5B-15B						
Line 3	T	13	(R-O) [R]			1C-11C						
	R	14	(O-R) [O]			2C-12C						
	A	15	(R-G) [R]			3C-13C						
	A1	16	(G-R) [G]			4C-14C						
	LG	17	(R-BR) [R]			6C-16C						
	L	18	(BR-R) [BR]			5C-15C						
Line 4	T	19	(R-S) [R]			1D-11D						
	R	20	(S-R) [S]			2D-12D						
	A	21	(BK-BL) [BK]			3D-13D						
	A1	22	(BL-BK) [BL]			4D-14D						
	LG	23	(BK-O) [BK]			6D-16D						
	L	24	(O-BK) [O]			5D-15D						
Line 5	T	25	(BK-G) [BK]			1A-11A		2nd‡	1-11		1st	
	R	26	(G-BK) [G]			2A-12A			2-12			
	A	27	(BK-BR) [BK]			3A-13A			3-13			
	A1	28	(BR-BK) [BR]			4A-14A			4-14			
	LG	29	(BK-S) [BK]			6A-16A			6-16			
	L	30	(S-BK) [S]			5A-15A			5-15			
Line 6	T	31	(Y-BL) [Y]			1B-11B			1-11		2nd	
	R	32	(BL-Y) [BL]			2B-12B			2-12			
	A	33	(Y-O) [Y]			3B-13B			3-13			
	A1	34	(O-Y) [O]			4B-14B			4-14			
	LG	35	(Y-G) [Y]			6B-16B			6-16			
	L	36	(G-Y) [G]			5B-15B			5-15			
Manual Intercom Line	T	37	(Y-BR) [Y]	30								
	R	38	(BR-Y) [BR]	40								
	LG	39§	(Y-S) [Y]									
	L	40	(S-Y) [S]	28								

* 232B KTU is arranged internally to disable time-out feature when BF relay is operated.
† 230B KTU is arranged for individual fusing of circuits 1 and 2 and circuits 3 and 4 lamp input power.
‡ If second 230A or B KTU is not used for lines 5 through 8, terminate leads on 202C or D key telephone units as shown.
§ Strap to terminal strip A, punching 5.
( ) Current Color Code.
[ ] MD Color Code.

TABLE B (Cont)

200G-TYPE KTU — CONNECTIONS

FEATURE	LEAD DESIGNATION	64B1-75 CABLE TERMINAL			TERMINAL ON KTU		TERMINAL ON KTU		TERMINAL‡ ON KTU			TERMINAL ON 207C KTU
		TERMINAL STRIP A	INSIDE WIRING CABLE		232A	232B	230A	230B	202C	202D		
Line 7	T R	1 2	(V-BL) [V] (BL-V) [BL]	BLUE BINDER			1C-11C 2C-12C	2nd‡	1-11 2-12	3rd		
	A A1	3 4	(V-O) [V] (O-V) [O]				3C-13C 4C-14C		3-13 4-14			
	LG L	5 6	(V-G) [V] (G-V) [G]				6C-16C 5C-15C		6-16 5-15			
Line 8	T R	7 8	(V-BR) [V] (BR-V) [BR]				1D-11D 2D-12D		1-11 2-12	4th		
	A A1	9 10	(V-S) [V] (S-V) [S]				3D-13D 4D-14D		3-13 4-14			
	LG L	11 12	(W-BL) [W] (BL-W) [BL]				6D-16D 5D-15D		6-16 5-15			
Line 9	T R	13 14	(W-O) [W] (O-W) [O]						1-11 2-12	5th		
	A A1	15 16	(W-G) [W] (G-W) [G]						3-13 4-14			
	LG L	17 18	(W-BR) [W] (BR-W) [BR]						6-16 5-15			
Dial Selective Intercom Line	T R	19 20	(W-S) [W] (S-W) [S]	ORANGE BINDER								1B-11B-21B 2B-12B-22B
	LG L	21 22	(R-BL) [R] (BL-R) [BL]									32B 3B
	B(2) R(2)	23 24	(R-O) [R] (O-R) [O]									36B 12A
	B(3) R(3)	25 26	(R-G) [R] (G-R) [G]									36B 13A
	B(4) R(4)	27 28	(R-BR) [R] (BR-R) [BR]									37B 14A
	B(5) R(5)	29 30	(R-S) [R] (S-R) [S]									37B 15A
	B(6) R(6)	31 32	(BK-BL) [BK] (BL-BK) [BL]									38B 16A
	B(7) R(7)	33 34	(BK-O) [BK] (O-BK) [O]									38B 17A
	B(8) R(8)	35 36	(BK-G) [BK] (G-BK) [G]									40B 18A
	B(9) R(9)	37 38	(BK-BR) [BK] (BR-BK) [BR]									40B 19A
	B(0) R(0)	39 40	(BK-S) [BK] (S-BK) [S]									31B 20A

‡ If second 230A or B KTU is not used for lines 5 through 8, terminate leads on 202C or D key telephone units as shown.
( ) Current Color Code.
[ ] MD Color Code.

TABLE B (Cont)

200G-TYPE KTU — CONNECTIONS

FEATURE		LEAD DESIGNATION	64B1-75 CABLE TERMINAL			TERMINAL ON KTU		TERMINAL ON KTU			TERMINAL‡ ON KTU			TERMINAL ON 207C KTU
			TERMINAL STRIP A	INSIDE WIRING CABLE		232A	232B	230A	230B		202C	202D		
Aud Sig	Line 1	B1 or BZ1 R1 or BZ	1 2	(Y-BL) [Y] (BL-Y) [BL]	ORANGE BINDER			25A 10A		1st				
	Line 2	B1 or BZ1 R1 or BZ	3 4	(Y-O) [Y] (O-Y) [O]				25A 10B						
	Line 3	B1 or BZ1 R1 or BZ	5 6	(Y-G) [Y] (G-Y) [G]				28A 10C	30A 10C					
	Line 4	B1 or BZ1 R1 or BZ	7 8	(Y-BR) [Y] (BR-Y) [BR]				28A 10D	30A 10D					
	Line 5	B1 or BZ1 R1 or BZ	9 10	(Y-S) [Y] (S-Y) [S]				25A 10A		2nd‡	25 10		1st	
	Line 6	B1 or BZ1 R1 or BZ	11 12	(V-BL) [V] (BL-V) [BL]				25A 10B	30A 10B		25 10	30 10	2nd	
	Line 7	B1 or BZ1 R1 or BZ	13 14	(V-O) [V] (O-V) [O]				28A 10C	25A 10C		25 10		3rd	
	Line 8	B1 or BZ1 R1 or BZ	15 16	(V-G) [V] (G-V) [G]				28A 10D	30A 10D		25 10	30 10	4th	
	Line 9	B1 or BZ1 R1 or BZ	17 18	(V-BR) [V] (BR-V) [BR]							25 10		5th	
CO or PBX	Line 1	T R	19 20	(V-S) [V] (S-V) [S]	GREEN BINDER			7A 8A		1st				
	Line 2	T R	21 22	(W-BL) [W] (BL-W) [BL]				7B 8B						
	Line 3	T R	23 24	(W-O) [W] (O-W) [O]				7C 8C						
	Line 4	T R	25 26	(W-G) [W] (G-W) [G]				7D 8D						
	Line 5	T R	27 28	(W-BR) [W] (BR-W) [BR]				7A 8A		2nd‡	7 8		1st	
	Line 6	T R	29 30	(W-S) [W] (S-W) [S]				7B 8B			7 8		2nd	
	Line 7	T R	31 32	(R-BL) [R] (BL-R) [BL]				7C 8C			7 8		3rd	
	Line 8	T R	33 34	(R-O) [R] (O-R) [O]				7D 8D			7 8		4th	
	Line 9	T R	35 36	(R-G) [R] (G-R) [G]							7 8		5th	
Spare			37 38	(R-BR) [R] (BR-R) [BR]										
			39 40	(R-S) [R] (S-R) [S]										

‡ If second 230A or B KTU is not used for lines 5 through 8, terminate leads on 202C or D key telephone units as shown.
[ ] MD Color Code.
( ) Current Color Code.

TABLE B (Cont)

200G-TYPE KTU — CONNECTIONS

FEATURE	LEAD DESIGNATION	64B1-75 CABLE TERMINAL		TERMINAL ON KTU		TERMINAL ON KTU			TERMINAL‡ ON KTU			TERMINAL ON 207C KTU
		TERMINAL STRIP E	INSIDE WIRING CABLE GREEN BINDER	232A	232B	230A	230B		202C	202D		
20V DC Talk (A Bat.)	GRD BAT.	1 2	(BK-BL) [BK] (BL-BK) [BL]	25 24								
20V DC Sig (B Bat.)	GRD BAT.	3 4	(BK-O) [BK] (O-BK) [O]	39		27A	14A 26A	1st				
Motor Supply	GRD 10V ±	5 6	(BK-G) [BK] (G-BK) [G]	27 26								
Aud Sig Supply	GRD BAT., ±, or 105V ±	7 8	(BK-BR) [BK] (BR-BK) [BR]	29		25A						
Lamp Supply 1st 4 Lines	GRD ± or BAT.	9 10	(BK-S) [BK] (S-BK) [S]			30A 29A	16A 29A					
Lamp Supply 2nd 4 Lines	GRD ± or BAT.	11 12	(Y-BL) [Y] (BL-Y) [BL]			30A 29A	16A 29A	2nd‡	30 29	6 29	1st	
Lamp Supply 9th Line and Dial Selective Intercom	GRD ± or BAT.	13 14	(Y-O) [Y] (O-Y) [O]						30 29	6 29	5th	32B 29B
Lamp Supply	± or BAT. ± or BAT.	15 16	(Y-G) [Y] (G-Y) [G]	9 10								
	± or BAT. ± or BAT.	17 18	(Y-BR) [Y] (BR-Y) [BR]	19 20								
Spare		19 20	(Y-S) [Y] (S-Y) [S]									
		21 22	(V-BL) [V] (BL-V) [BL]									
		23 24	(V-O) [V] (O-V) [O]									
		25 26	(V-G) [V] (G-V) [G]									
		27 28	(V-BR) [V] (BR-V) [BR]									
		29 30	(V-S) [V] (S-V) [S]									
Vacant		31 32										
		33 34										
		35 36										
		37 38										
		39 40										

‡ If second 230A or B KTU is not used for lines 5 through 8, terminate leads on 202C or D key telephone units as shown.
( ) Current Color Code.
[ ] MD Color Code.

TABLE C

200K-TYPE KTU — CONNECTIONS

FEATURE	LEAD DESIGNATION	64A1-50 CABLE TERMINAL		TERMINAL ON 232A OR B KTU*	TERMINAL ON 230A OR B KTU†	TERMINAL ON 202C OR D KTU		TERMINAL ON 207C KTU
		30-TYPE CONN BLOCK TERMINAL	INSIDE WIRING CABLE BLUE BINDER					
Line 1	T R	1T 1R	(W-BL) [W] (BL-W) [BL]		1A-11A 2A-12A			
	A A1	2T 2R	(W-O) [W] (O-W) [O]		3A-13A 4A-14A			
	LG L	3T 3R	(W-G) [W] (G-W) [G]		6A-16A 5A-15A			
Line 2	T R	4T 4R	(W-BR) [W] (BR-W) [BR]		1B-11B 2B-12B			
	A A1	5T 5R	(W-S) [W] (S-W) [S]		3B-13B 4B-14B			
	LG L	6T 6R	(R-BL) [R] (BL-R) [BL]		6B-16B 5B-15B			
Line 3	T R	7T 7R	(R-O) [R] (O-R) [O]		1C-11C 2C-12C			
	A A1	8T 8R	(R-G) [R] (G-R) [G]		3C-13C 4C-14C			
	LG L	9T 9R	(R-BR) [R] (BR-R) [BR]		6C-16C 5C-15C			
Line 4	T R	10T 10R	(R-S) [R] (S-R) [S]		1D-11D 2D-12D			
	A A1	11T 11R	(BK-BL) [BK] (BL-BK) [BL]		3D-13D 4D-14D			
	LG L	12T 12R	(BK-O) [BK] (O-BK) [O]		6D-16D 5D-15D			
Line 5	T R	13T 13R	(BK-G) [BK] (G-BK) [G]			1-11 2-12	1st	
	A A1	14T 14R	(BK-BR) [BK] (BR-BK) [BR]			3-13 4-14		
	LG L	15T 15R	(BL-S) [BK] (S-BL) [S]			6-16 5-15		
Line 6	T R	16T 16R	(Y-BL) [Y] (BL-Y) [BL]			1-11 2-12	2nd	
	A A1	17T 17R	(Y-O) [Y] (O-Y) [O]			3-13 4-14		
	LG L	18T 18R	(Y-G) [Y] (G-Y) [G]			6-16 5-15		
Line 7	T R	19T 19R	(Y-BR) [Y] (BR-Y) [BR]			1-11 2-12	3rd	
	A A1	20T 20R	(Y-S) [Y] (S-Y) [S]			3-13 4-14		
	LG L	21T 21R	(V-BL) [V] (BL-V) [BL]			6-16 5-15		
Manual Intercom Line	T R	22T 22R	(V-O) [V] (O-V) [O]	30 40				
	LG L	23T 23R	(V-G) [V] (G-V) [G]	27 28				
Dial Selective Intercom Line	T R	24T 24R	(V-BR) [V] (BR-V) [BR]					1B-11B-21B 2B-12B-22B
	LG L	25T 25R	(V-S) [V] (S-V) [S]					32B 3B

* 232B KTU is arranged internally to disable time-out feature when BF relay is operated.
† 230B KTU is arranged for individual fusing of Circuits 1 and 2 and Circuits 3 and 4 lamp input power.
( ) Current Color Code.
[ ] MD Color Code.

TABLE C (Cont)

200K-TYPE KTU — CONNECTIONS

FEATURE	LEAD DESIGNATION	64A1-50 CABLE TERMINAL		TERMINAL ON 232A OR B KTU*	TERMINAL ON 230A OR B KTU†		TERMINAL ON 202C OR D KTU		TERMINAL ON 207C KTU
		30-TYPE CONN BLOCK TERMINAL	INSIDE WIRING CABLE ORANGE BINDER						
Dial Selective Intercom Line	B(2) R(2)	26T 26R	(W-BL) [W] (BL-W) [BL]						36B 12A
	B(3) R(3)	27T 27R	(W-O) [W] (O-W) [O]						36B 13A
	B(4) R(4)	28T 28R	(W-G) [W] (G-W) [G]						37B 14A
	B(5) R(5)	29T 29R	(W-BR) [W] (BR-W) [BR]						37B 15A
	B(6) R(6)	30T 30R	(W-S) [W] (S-W) [S]						38B 16A
	B(7) R(7)	31T 31R	(R-BL) [R] (BL-R) [BL]						38B 17A
	B(8) R(8)	32T 32R	(R-O) [R] (O-R) [O]						40B 18A
	B(9) R(9)	33T 33R	(R-G) [R] (G-R) [G]						40B 19A
	B(0) R(0)	34T 34R	(R-BR) [R] (BR-R) [BR]						31B 20A
Line 1	B1 or BZ1 R1 or BZ	35T 35R	(R-S) [R] (S-R) [S]		25A 10A	30A 10A			
Line 2	B1 or BZ1 R1 or BZ	36T 36R	(BK-BL) [BK] (BL-BK) [BL]		25A 10B				
Line 3	B1 or BZ1 R1 or BZ	37T 37R	(BK-O) [BK] (O-BK) [O]		25A 10C				
Line 4	B1 or BZ1 R1 or BZ	38T 38R	(BK-G) [BK] (G-BK) [G]		28A 10D	30A 10D			
Line 5	B1 or BZ1 B1 or BZ1	39T 39R	(BK-BR) [BK] (BR-BK) [BR]				25 10	1st	
Line 6	R1 or BZ R1 or BZ	40T 40R	(BK-S) [BK] (S-BK) [S]				25 10	2nd	
Line 7	B1 or BZ1 R1 or BZ	41T 41R	(Y-BL) [Y] (BL-Y) [BL]				25 10	3rd	
CO or PBX Line 1	T R	42T 42R	(Y-O) [Y] (O-Y) [O]		7A 8A				
CO or PBX Line 2	T R	43T 43R	(Y-G) [Y] (G-Y) [G]		7B 8B				
CO or PBX Line 3	T R	44T 44R	(Y-BR) [Y] (BR-Y) [BR]		7C 8C				
CO or PBX Line 4	T R	45T 45R	(Y-S) [Y] (S-Y) [S]		7D 8D				
CO or PBX Line 5	T R	46T 46R	(V-BL) [V] (BL-V) [BL]				7 8	1st	
CO or PBX Line 6	T R	47T 47R	(V-O) [V] (O-V) [O]				7 8	2nd	
CO or PBX Line 7	T R	48T 48R	(V-G) [V] (G-V) [G]				7 8	3rd	
Ringing Supply	GRD 105V±	49T 49R*	(V-BR) [V] (BR-V) [BR]	29	28A	30A			
Local Ground	GRD GRD	50T 50R	(V-S) [V] (S-V) [S]						

* If J86731C, List 1 (frequency-generator) power plant is installed locally, disconnect and tape (V-BR) [V] and (BR-V) [BR] cable pair.
( ) Current Color Code.
[ ] MD Color Code.

TABLE D

200-TYPE KTU OPTIONS

WIRING FOR CO OR PBX LINES		OPTION
Metalic Ringing (Furnished)		Z
Grounded Ringing		Y
Interrupted Audible Sig (Furnished)		X
Steady Audible Signal		W
Lamp Max	Max 40 Lamps (Furnished)	S
	Max 80 Lamps	R

REPLACING PAGE ADDENDUM
Filing Instructions:

1. REMOVE FROM THE SECTION THE PAGES NUMBERED THE SAME AS THOSE ATTACHED TO THIS PINK SHEET.
2. INSERT THE ATTACHED PAGES INTO THE SECTION IN THEIR PLACE.
3. PLACE THIS PINK SHEET AHEAD OF PAGE 1 OF THE SECTION.

SERVICE

1A1 KEY TELEPHONE SYSTEM

200H PACKAGED UNITS

1. GENERAL

1.001 This addendum supplements Section 518-114-431, Issue 3. The attached pages must be inserted in the section in accordance with the filing instructions above.

1.002 This addendum is issued to:

(a) Add the 232C KTU

(b) Add caution concerning 207C KTU.

2. CONNECTIONS

The following changes apply to Part 2 of the section:

(a) Table B—revised

(b) Fig. 1—revised

(c) Table F—revised.

Attached:

Page 3 dated August 1974, revised
Page 4 dated August 1974, revised
Page 5 dated August 1974, revised
Page 6 dated August 1974, revised
Page 15 dated August 1974, revised
Page 16 dated August 1974, revised

© American Telephone and Telegraph Company 1972, 1974
Printed in U.S.A.

SERVICE

1A1 KEY TELEPHONE SYSTEM

200H PACKAGED UNITS

1. GENERAL

1.01 This section is reissued to:

- Revise tables and figures
- Provide additional option information.

1.02 This issue of the section is based on the following drawings:

- SD-69286-01 Issue 8D
- SD-69354-01 Issue 6D
- ▶SD-69447-01 Issue 6D
- SD-69529-01 Issue 6B◀

If this section is to be used with equipment or apparatus reflecting later issue(s) of the drawing(s), reference should be made to the SDs and CDs to determine the extent of the changes and the manner in which the section may be affected.

1.03 Additional information regarding the 200H packaged KTU may be found in a reference section of the 518 Division BSPs.

2. CONNECTIONS

2.01 See Fig. 1 for strapping arrangements between KTUs, power connections, and key cable connections.

2.02 Fig. 2 and 3 provide connections for the 247A(MD) and 247B KTUs, respectively, when TOUCH-TONE® calling is required. ▶Fig. 4 provides Y2 card options in 247B KTU.◀

2.03 ▶Tables A, B, C, and D provide option information. Table E provides current drain information and Table F shows features, and connections for key cables at both the KTUs and terminal strips E, F, G, H, and J on the 64B1-100 Cable Terminal.◀

2.04 This package is factory-wired for the digit 2 to be used as the initial digit of 2-digit codes. When required, any other digit except 1 may be used as the initial digit. The digit so assigned cannot be used as a single-digit station code. Connecting the SW2 lead to selected terminal 2A through 9A on 207C KTU determines the first digit. Example: SW lead connected to 2A terminal the first digit is 2, and if connected to 3A the first digit is 3, etc.

2.05 Station selection may be accomplished through the operation of a locally furnished signal key. Signaling keys 551A or 549-type may be provided by 1A, 1A1, or 1A2 Key Telephone Systems, or equivalent keys may be used. See Table A for signal key lead connections.

2.06 For all system arrangements where direct current is used to operate bells, buzzers, or lamps, assume a current drain of 0.056 amp for each 7A-type bell or buzzer and a current drain of 0.035 amp for each A3 lamp. The current drain for the 2-talking link is shown in Table E.

2.07 ***Connection Index:***

Table A—SD-69354-01 Options in 200H-Type KTU

Table B—SD-69286-01 (6A Key Telephone System) Options Used With 200H-Type KTU

Table C—SD-69447-01 (247A KTU) Options Used With 200H-Type KTU

Table D—SD-69529-01 (247B KTU) Options Used With 200H-Type KTU

Table E—Current Drain Requirements for 2-Talking Link Arrangements

© American Telephone and Telegraph Company, 1972
Printed in U.S.A.

Table F—Features and Connections at KTUs and Terminal Strips E, F, G, H, and J on the 64B1-100 Cable Terminal

Fig. 1—Strapping and Connection of the 200H-Type KTU

Fig. 2—Addition of TOUCH-TONE® Adapter Circuit, 247A KTU(MD) with 222A and 223A KTUs

Fig. 3—Addition of TOUCH-TONE® Adapter Circuit, 247B KTU with 222A and 223A KTUs

Fig. 4—Y2 Card Options in 247B KTU

→TABLE A←

SD-69354-01 OPTIONS IN 200H-TYPE KTU

FEATURES SEE TABLE F AND FIG. 1		OPTIONS
Station audible signal	Over T and R leads	Y
	Over separate signaling pair	Z
Flash, wink, ring, and time-out circuit	Provided in package	X
	Provided externally	W
Electro-mechanical flash, wink, ring and time-out circuit	KS-15900, List 1 interrupter, 10v ac	T
	KS-19384, List 2 interrupter, 24v dc	V

→TABLE B←

SD-69286-01 (6A KEY TELEPHONE SYSTEM) OPTIONS USED WITH 200H-TYPE KTU

TYPE OPTION	FEATURES	OPTIONS
SYSTEM	Used with single- or 2-link arrangement	A
	Used with selector only arrangement	B
	With camp-on	G
	Without auxiliary relay busy lamp circuit	H
	Without preset conference	J
	Without auxiliary relay lamp flash circuit	S
	Two-talking link arrangement with camp-on	T
	Over nine codes	W
	Without add-on transfer circuit or auxiliary relay station circuit	AG
	Dial, busy, and audible tone*	AJ
	Interrupted ringing	AK
	Single spurt ringing	AL
	Busy signal and camp-on control circuit when used with 207B KTU	AQ
STATION	Is automatically cut off	E
	Is not automatically cut off	F
	Audible signal over T and R leads	Y
	Audible signal over separate signal pair	Z
	Signal key selection of local or off-premise station when interrupted ringing is provided	AE

*Only busy tone is furnished.

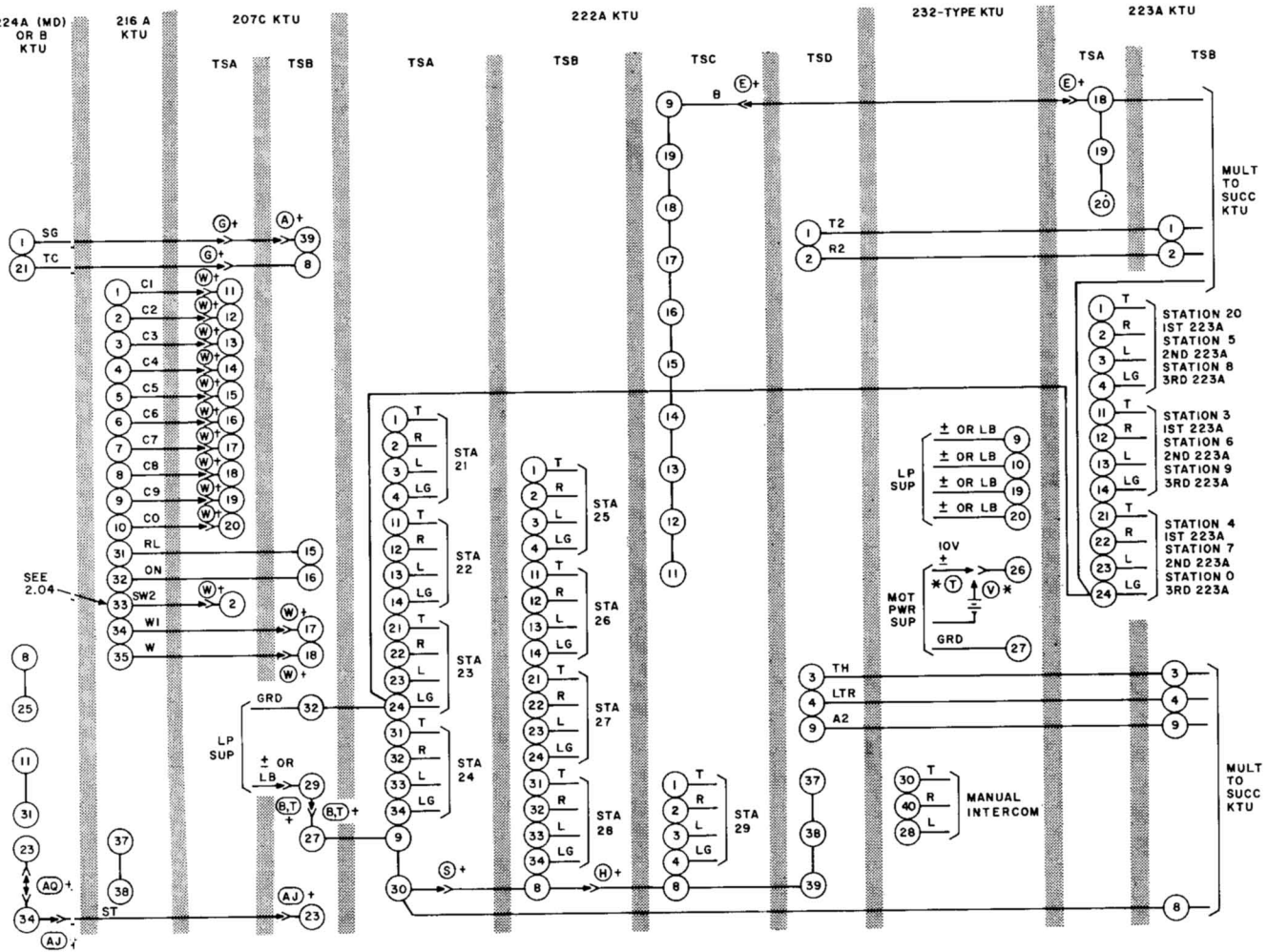

Fig. 1—Strapping and Connections of KTU (Sheet 1)

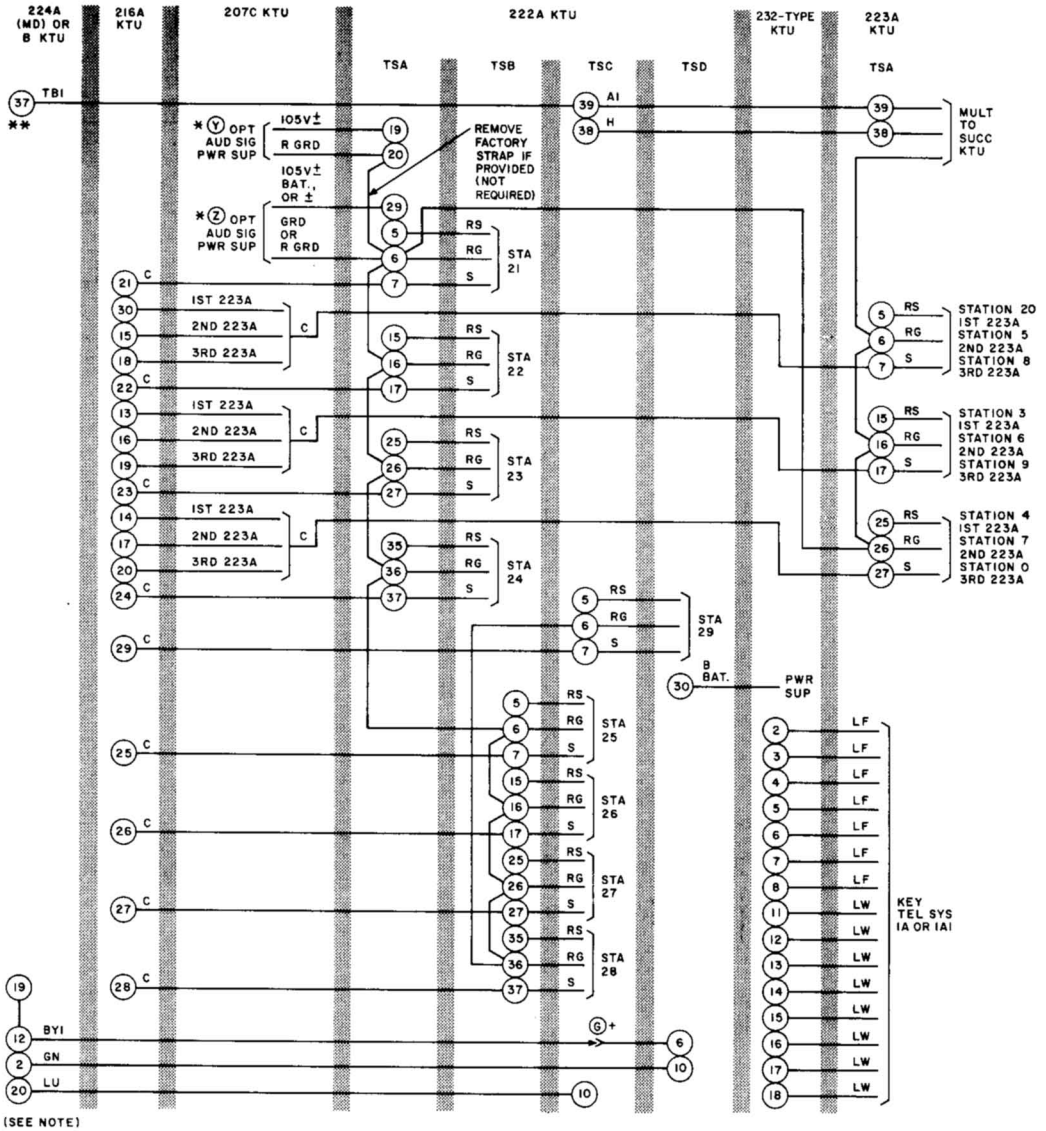

NOTE:

IF CAMP-ON CIRCUIT FAILS TO CUT THROUGH DURING LINK TRANSFER, DUE TO RELAY (LTR), IN THE 224A (MD) OR B KTU, OPERATING AND RELEASING BEFORE RELAY (BY) IN THE 224A (MD) OR B KTU RELEASES, DISCONNECT THE "LU" LEAD FROM TERMINAL 20 AND CONNECT A 3900 OHM KS-13490, L1 RESISTOR ACROSS SCREW TERMINALS 20 AND 30 OF THE 224A (MD) OR B KTU. CONNECT THE "LU" LEAD TO TERMINAL 30.

** 224B KTU ONLY.

Fig. 1—Strapping and Connections of KTU (Sheet 2)

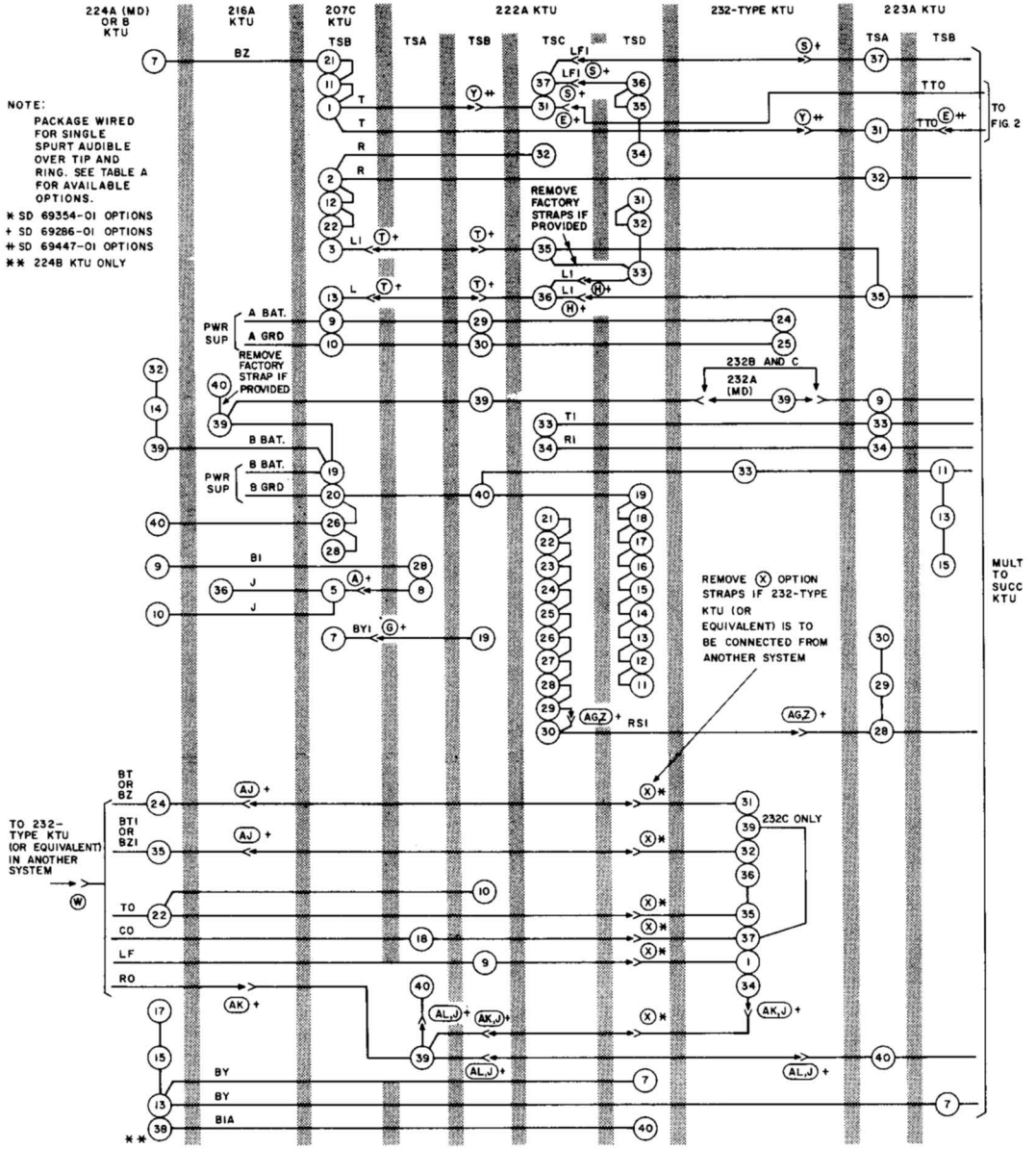

Fig. 1—Strapping and Connections of KTU (Sheet 3)

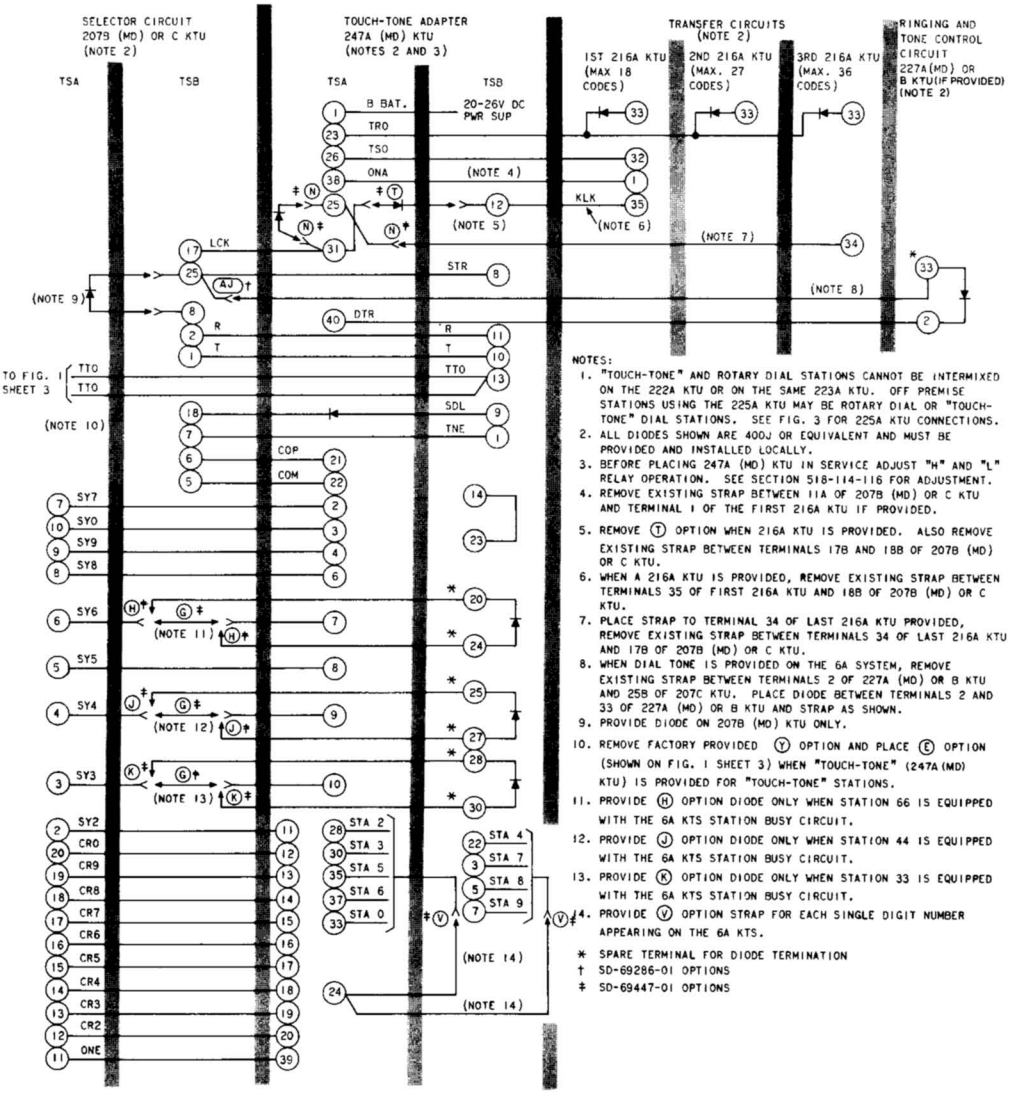

NOTES:

1. "TOUCH-TONE" AND ROTARY DIAL STATIONS CANNOT BE INTERMIXED ON THE 222A KTU OR ON THE SAME 223A KTU. OFF PREMISE STATIONS USING THE 225A KTU MAY BE ROTARY DIAL OR "TOUCH-TONE" DIAL STATIONS. SEE FIG. 3 FOR 225A KTU CONNECTIONS.
2. ALL DIODES SHOWN ARE 400J OR EQUIVALENT AND MUST BE PROVIDED AND INSTALLED LOCALLY.
3. BEFORE PLACING 247A (MD) KTU IN SERVICE ADJUST "H" AND "L" RELAY OPERATION. SEE SECTION 518-114-116 FOR ADJUSTMENT.
4. REMOVE EXISTING STRAP BETWEEN 11A OF 207B (MD) OR C KTU AND TERMINAL 1 OF THE FIRST 216A KTU IF PROVIDED.
5. REMOVE (T) OPTION WHEN 216A KTU IS PROVIDED. ALSO REMOVE EXISTING STRAP BETWEEN TERMINALS 17B AND 18B OF 207B (MD) OR C KTU.
6. WHEN A 216A KTU IS PROVIDED, REMOVE EXISTING STRAP BETWEEN TERMINALS 35 OF FIRST 216A KTU AND 18B OF 207B (MD) OR C KTU.
7. PLACE STRAP TO TERMINAL 34 OF LAST 216A KTU PROVIDED, REMOVE EXISTING STRAP BETWEEN TERMINALS 34 OF LAST 216A KTU AND 17B OF 207B (MD) OR C KTU.
8. WHEN DIAL TONE IS PROVIDED ON THE 6A SYSTEM, REMOVE EXISTING STRAP BETWEEN TERMINALS 2 OF 227A (MD) OR B KTU AND 25B OF 207C KTU. PLACE DIODE BETWEEN TERMINALS 2 AND 33 OF 227A (MD) OR B KTU AND STRAP AS SHOWN.
9. PROVIDE DIODE ON 207B (MD) KTU ONLY.
10. REMOVE FACTORY PROVIDED (Y) OPTION AND PLACE (E) OPTION (SHOWN ON FIG. 1 SHEET 3) WHEN "TOUCH-TONE" (247A (MD) KTU) IS PROVIDED FOR "TOUCH-TONE" STATIONS.
11. PROVIDE (H) OPTION DIODE ONLY WHEN STATION 66 IS EQUIPPED WITH THE 6A KTS STATION BUSY CIRCUIT.
12. PROVIDE (J) OPTION DIODE ONLY WHEN STATION 44 IS EQUIPPED WITH THE 6A KTS STATION BUSY CIRCUIT.
13. PROVIDE (K) OPTION DIODE ONLY WHEN STATION 33 IS EQUIPPED WITH THE 6A KTS STATION BUSY CIRCUIT.
14. PROVIDE (V) OPTION STRAP FOR EACH SINGLE DIGIT NUMBER APPEARING ON THE 6A KTS.

* SPARE TERMINAL FOR DIODE TERMINATION
† SD-69286-01 OPTIONS
‡ SD-69447-01 OPTIONS

Fig. 2—Addition of TOUCH-TONE® Adapter Circuit, 247A KTU (MD) With 222A and 223A KTUs

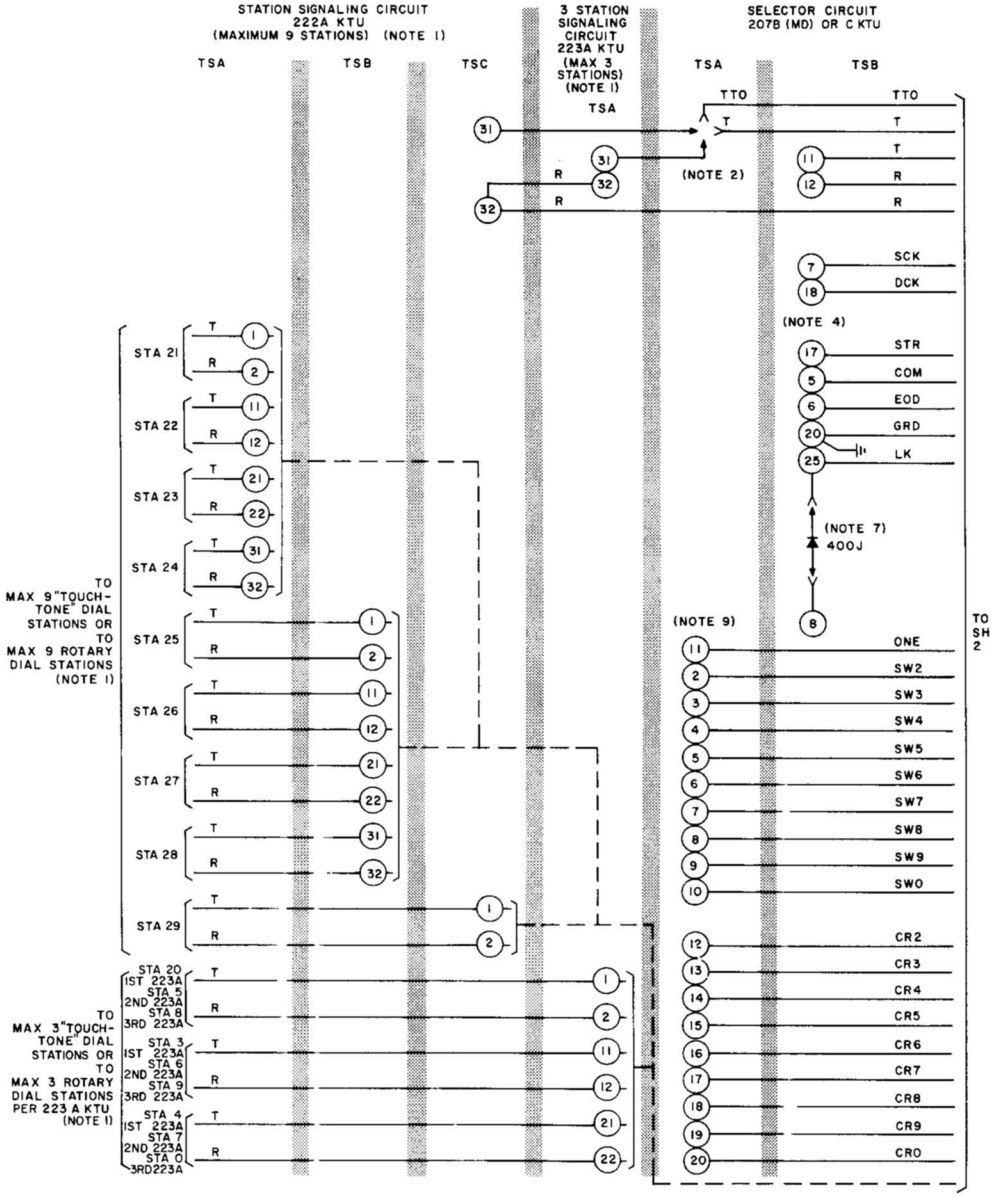

Fig. 3—Addition of TOUCH-TONE® Adapter Circuit, 247B KTU With 222A and 223A KTUs (Sheet 1)

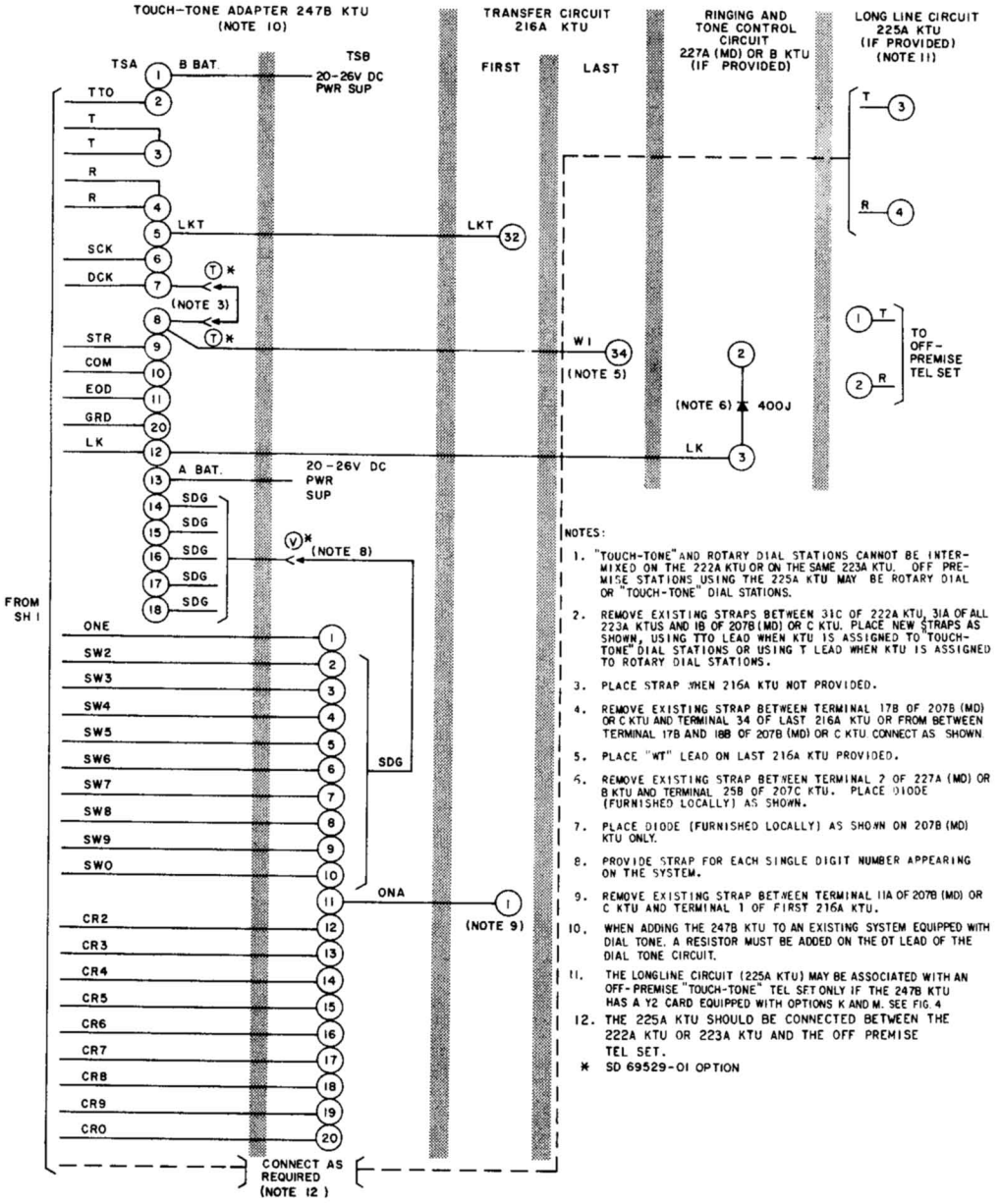

NOTES:

1. "TOUCH-TONE" AND ROTARY DIAL STATIONS CANNOT BE INTERMIXED ON THE 222A KTU OR ON THE SAME 223A KTU. OFF PREMISE STATIONS USING THE 225A KTU MAY BE ROTARY DIAL OR "TOUCH-TONE" DIAL STATIONS.
2. REMOVE EXISTING STRAPS BETWEEN 31C OF 222A KTU, 31A OF ALL 223A KTUS AND 18 OF 207B (MD) OR C KTU. PLACE NEW STRAPS AS SHOWN, USING TTO LEAD WHEN KTU IS ASSIGNED TO "TOUCH-TONE" DIAL STATIONS OR USING T LEAD WHEN KTU IS ASSIGNED TO ROTARY DIAL STATIONS.
3. PLACE STRAP WHEN 216A KTU NOT PROVIDED.
4. REMOVE EXISTING STRAP BETWEEN TERMINAL 17B OF 207B (MD) OR C KTU AND TERMINAL 34 OF LAST 216A KTU OR FROM BETWEEN TERMINAL 17B AND 18B OF 207B (MD) OR C KTU CONNECT AS SHOWN.
5. PLACE "WT" LEAD ON LAST 216A KTU PROVIDED.
6. REMOVE EXISTING STRAP BETWEEN TERMINAL 2 OF 227A (MD) OR B KTU AND TERMINAL 25B OF 207C KTU. PLACE DIODE (FURNISHED LOCALLY) AS SHOWN.
7. PLACE DIODE (FURNISHED LOCALLY) AS SHOWN ON 207B (MD) KTU ONLY.
8. PROVIDE STRAP FOR EACH SINGLE DIGIT NUMBER APPEARING ON THE SYSTEM.
9. REMOVE EXISTING STRAP BETWEEN TERMINAL 11A OF 207B (MD) OR C KTU AND TERMINAL 1 OF FIRST 216A KTU.
10. WHEN ADDING THE 247B KTU TO AN EXISTING SYSTEM EQUIPPED WITH DIAL TONE. A RESISTOR MUST BE ADDED ON THE DT LEAD OF THE DIAL TONE CIRCUIT.
11. THE LONGLINE CIRCUIT (225A KTU) MAY BE ASSOCIATED WITH AN OFF-PREMISE "TOUCH-TONE" TEL SET ONLY IF THE 247B KTU HAS A Y2 CARD EQUIPPED WITH OPTIONS K AND M. SEE FIG. 4.
12. THE 225A KTU SHOULD BE CONNECTED BETWEEN THE 222A KTU OR 223A KTU AND THE OFF PREMISE TEL SET.

* SD 69529-01 OPTION

Fig. 3—Addition of TOUCH-TONE® Adapter Circuit, 247B KTU With 222A and 223A KTUs (Sheet 2)

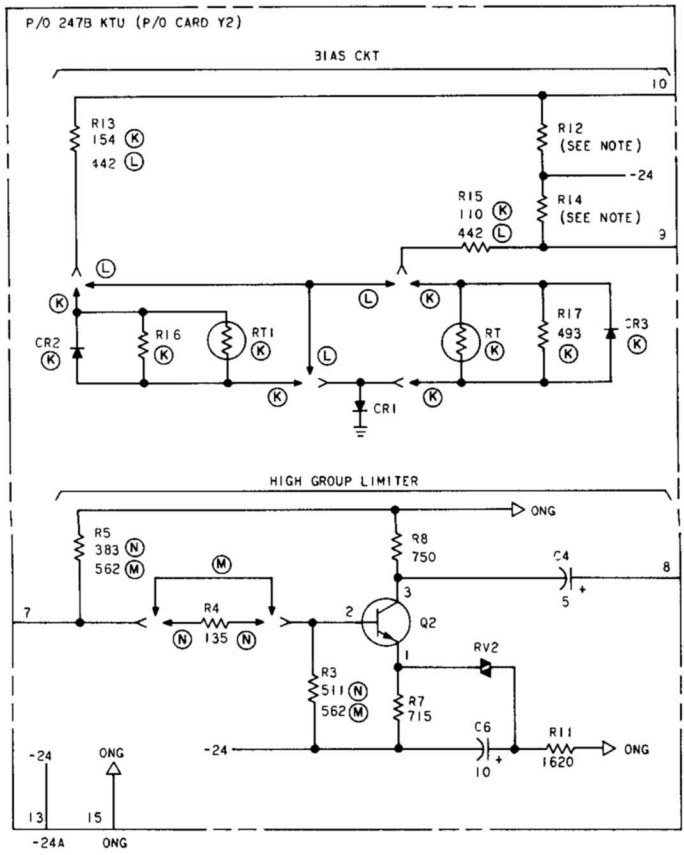

NOTE:
THE VALUES OF RESISTORS R12 AND R14 SHOULD BE SELECTED FROM THE FOLLOWING LIST TO PROVIDE REQUIRED BIAS.

VOLTAGE ACROSS CR1	RESISTANCE VALUE R12		R14	
	(K)	(L)	(K)	(L)
5.8V TO 6.0V	3120	3320	4020	4270
6.1V TO 6.3V	3650	3920	4810	5230
6.4V TO 6.6V	4480	4750	6420	6810

OPTIONS:
(K) AND (M) ARE FACTORY FURNISHED.

Fig. 4—Y2 Card Options in 247B KTU

→TABLE C←

SD-69447-01 (247A KTU) OPTIONS USED WITH 200H-TYPE KTU

FEATURES			OPTIONS
KTS No. 6A one-link and 2-link arrangements	When station busy circuits are not provided		G
	When station busy circuit is provided with	STA 33	K
		STA 44	J
		STA 66	H
When one or more 216A KTU are provided			N
When 216A KTU is not provided			T
Single-digit station code			V
2-link arrangements 222A KTU with	Rotary dial station		Y
	"TOUCH-TONE"® dial station		E

→TABLE D←

SD-69529-01 (247B KTU) OPTIONS USED WITH 200H-TYPE KTU

FEATURES	OPTIONS
When 216A KTU (with KTS No. 6A) is not provided	T
Strapping for single-digit code, single- or 2-link	V

→TABLE E←

CURRENT DRAIN REQUIREMENTS FOR 2-TALKING LINK ARRANGEMENTS

2-TALKING LINK ARRANGEMENT	BATTERY SUPPLY AMPERES			
	MAX CURRENT DRAIN AT MIN VOLTAGE (20 VOLTS)		CURRENT DRAIN DURING NORMAL TALKING CONDITION (24 VOLTS)	
	A BAT.	B BAT.	A BAT.	B BAT.
Installation over 9 codes and using transfer circuit	0.374	0.827	0.205	0.200
Installation with camp-on circuit	0.454	1.007	0.215	0.210

TABLE F
200H-TYPE KTU CONNECTIONS TERMINAL STRIP E

FEATURE	STA	LEAD DESIG	64B1-100 CABLE TERMINAL			TERM. ON 207C KTU	TERM. ON 222A KTU	TERM. ON 223A KTU		TERM. ON 232A (MD) OR B KTU	TERM. ON 224A (MD) OR B KTU
			TS E	INSIDE WIRE CABLE							
Dial Intercom	21	T	1	(W-BL)	[W]	BLUE BINDER		1A			
		R	2	(BL-W)	[BL]			2A			
		LG	3	(W-O)	[W]			4A			
		L	4	(O-W)	[O]			3A			
	22	T	5	(W-G)	[W]			11A			
		R	6	(G-W)	[G]			12A			
		LG	7	(W-BR)	[W]			14A			
		L	8	(BR-W)	[BR]			13A			
	23	T	9	(W-S)	[W]			21A			
		R	10	(S-W)	[S]			22A			
		LG	11	(R-BL)	[R]			24A			
		L	12	(BL-R)	[BL]			23A			
	24	T	13	(R-O)	[R]			31A			
		R	14	(O-R)	[O]			32A			
		LG	15	(R-G)	[R]			34A			
		L	16	(G-R)	[G]			33A			
	25	T	17	(R-BR)	[R]			1B			
		R	18	(BR-R)	[BR]			2B			
		LG	19	(R-S)	[R]			4B			
		L	20	(S-R)	[S]			3B			
	26	T	21	(BK-BL)	[BK]			11B			
		R	22	(BL-BK)	[BL]			12B			
		LG	23	(BK-O)	[BK]			14B			
		L	24	(O-BK)	[O]			13B			
	27	T	25	(BK-G)	[BK]			21B			
		R	26	(G-BK)	[G]			22B			
		LG	27	(BK-BR)	[BK]			24B			
		L	28	(BR-BK)	[BR]			23B			
	28	T	29	(BK-S)	[BK]			31B			
		R	30	(S-BK)	[S]			32B			
		LG	31	(Y-BL)	[Y]			34B			
		L	32	(BL-Y)	[BL]			33B			
	29	T	33	(Y-O)	[Y]			1C			
		R	34	(O-Y)	[O]			2C			
		LG	35	(Y-G)	[Y]			4C			
		L	36	(G-Y)	[G]			3C			
	20	T	37	(Y-BR)	[Y]				1A		
		R	38	(BR-Y)	[BR]				2A	1st	
		LG	39	(Y-S)	[Y]				4A		
		L	40	(S-Y)	[S]				3A		

( ) Current color code.
[ ] MD color code.

TABLE F (Cont)
200H-TYPE KTU CONNECTIONS TERMINAL STRIP F

FEATURE	STA	LEAD DESIG	64B1-100 CABLE TERMINAL				TERM. ON 207C KTU	TERM. ON 222A KTU	TERM. ON 223A KTU		TERM. ON 232A (MD) OR B KTU	TERM. ON 224A (MD) OR B KTU
			TS F	INSIDE WIRE CABLE								
Dial Intercom	3	T	1	(V-BL)	[V]	BLUE BINDER			11A	1st		
		R	2	(BL-V)	[BL]				12A			
		LG	3	(V-O)	[V]				14A			
		L	4	(O-V)	[O]				13A			
	4	T	5	(V-G)	[V]				21A			
		R	6	(G-V)	[G]				22A			
		LG	7	(V-BR)	[V]				24A			
		L	8	(BR-V)	[BR]				23A			
	5	T	9	(V-S)	[V]				1A	2nd		
		R	10	(S-V)	[S]				2A			
		LG	11	(W-BL)	[W]	ORANGE BINDER			4A			
		L	12	(BL-W)	[BL]				3A			
	6	T	13	(W-O)	[W]				11A			
		R	14	(O-W)	[O]				12A			
		LG	15	(W-G)	[W]				14A			
		L	16	(G-W)	[G]				13A			
	7	T	17	(W-BR)	[W]				21A			
		R	18	(BR-W)	[BR]				22A			
		LG	19	(W-S)	[W]				24A			
		L	20	(S-W)	[S]				23A			
	8	T	21	(R-BL)	[R]				1A	3rd		
		R	22	(BL-R)	[BL]				2A			
		LG	23	(R-O)	[R]				4A			
		L	24	(O-R)	[O]				3A			
	9	T	25	(R-G)	[R]				11A			
		R	26	(G-R)	[G]				12A			
		LG	27	(R-BR)	[R]				14A			
		L	28	(BR-R)	[BR]				13A			
	0	T	29	(R-S)	[R]				21A			
		R	30	(S-R)	[S]				22A			
		LG	31	(BK-BL)	[BK]				24A			
		L	32	(BL-BK)	[BL]				23A			
Signal Key Leads	21	S	33	(BK-O)	[BK]			7A				
	22	S	34	(O-BK)	[O]			17A				
	23	S	35	(BK-G)	[BK]			27A				
	24	S	36	(G-BK)	[G]			37A				
	25	S	37	(BK-BR)	[BK]			7B				
	26	S	38	(BR-BK)	[BR]			17B				
	27	S	39	(BK-S)	[BK]			27B				
	28	S	40	(S-BK)	[S]			37B				

( ) Current color code.
[ ] MD color code.

TABLE F (Cont)
200H-TYPE KTU CONNECTIONS TERMINAL STRIP G

FEATURE	STA	LEAD DESIG	64B1-100 CABLE TERMINAL				TERM. ON 207C KTU	TERM. ON 222A KTU	TERM. ON 223A KTU		TERM. ON 232A (MD) OR B KTU	TERM. ON 224A (MD) OR B KTU
			TS G	INSIDE WIRE CABLE								
Signal Key Leads	29	S	1	(Y-BL)	[Y]	ORANGE BINDER		7C				
	20	S	2	(BL-Y)	[BL]				7A			
	3	S	3	(Y-O)	[Y]				17A	1st		
	4	S	4	(O-Y)	[O]				27A			
	5	S	5	(Y-G)	[Y]				7A			
	6	S	6	(G-Y)	[G]				17A	2nd		
	7	S	7	(Y-BR)	[Y]				27A			
	8	S	8	(BR-Y)	[BR]				7A			
	9	S	9	(Y-S)	[Y]				17A	3rd		
	0	S	10	(S-Y)	[S]				27A			
Station Audible Signal — *Z* Option		RS	11	(V-BL)	[V]			5A				
	21	RG	12	(BL-V)	[BL]			6A				
		RS	13	(V-O)	[V]			15A				
	22	RG	14	(O-V)	[O]			16A				
		RS	15	(V-G)	[V]			25A				
	23	RG	16	(G-V)	[G]			26A				
		RS	17	(V-BR)	[V]			35A				
	24	RG	18	(BR-V)	[BR]			36A				
		RS	19	(V-S)	[V]			5B				
	25	RG	20	(S-V)	[S]			6B				
		RS	21	(W-BL)	[W]	GREEN BINDER		15B				
	26	RG	22	(BL-W)	[BL]			16B				
		RS	23	(W-O)	[W]			25B				
	27	RG	24	(O-W)	[O]			26B				
		RS	25	(W-G)	[W]			35B				
	28	RG	26	(G-W)	[G]			36B				
		RS	27	(W-BR)	[W]			5C				
	29	RG	28	(BR-W)	[BR]			6C				
		RS	29	(W-S)	[W]				5A			
	20	RG	30	(S-W)	[S]				6A			
		RS	31	(R-BL)	[R]				15A	1st		
	3	RG	32	(BL-R)	[BL]				16A			
		RS	33	(R-O)	[R]				25A			
	4	RG	34	(O-R)	[O]				26A			
		RS	35	(R-G)	[R]				5A			
	5	RG	36	(G-R)	[G]				6A			
		RS	37	(R-BR)	[R]				15A	2nd		
	6	RG	38	(BR-R)	[BR]				16A			
		RS	39	(R-S)	[R]				25A			
	7	RG	40	(S-R)	[S]				26A			

( ) Current color code.
[ ] MD color code.

TABLE F (Cont)
200H-TYPE KTU CONNECTIONS TERMINAL STRIP H

FEATURE	STA	LEAD DESIG	64B1-100 CABLE TERMINAL			TERM. ON 207C KTU **	TERM. ON 222A KTU	TERM. ON 223A KTU		TERM. ON 232A (MD) B or C KTU ¶	TERM. ON 224A (MD) OR B KTU
			TS H	INSIDE WIRE CABLE							
Sta Aud Sig — *Z* Option	8	RS	1	(BK-BL)	[BK]			5A			
		RG	2	(BL-BK)	[BL]			6A			
	9	RS	3	(BK-O)	[BK]			15A	3rd		
		RG	4	(O-BK)	[O]			16A			
	0	RS	5	(BK-G)	[BK]			25A			
		RG	6	(G-BK)	[G]			26A			
To Power Supply		"B" GRD	7	(BK-BR)	[BK]	20B					
		"B" BAT. (SIG)	8	(BR-BK)	[BR]	19B					
To Lamp Supply		GRD	9	(BK-S)	[BK]	32B					
		± or LB	10	(S-BK)	[S]	29B					
To Power Supply		"A" GRD	11	(Y-BL)	[Y]	10B					
		"A" BAT. (TALK)	12	(BL-Y)	[BL]	9B					
Aud Sig Pwr Sup Options	*Y*	G GRD	13	(Y-O)	[Y]		20A				
	Z	GRD or R GRD	*	*	*		6A				
	Y	105V±	14	(O-Y)	[O]		19A				
	Z	BAT., ±, or 105V±	*	*	*		29A				
X Option† to Interrupter in Package		CO§	15	(Y-G)	[Y]					37	
		TO	16	(G-Y)	[G]					36	
		BT1 or BZ1	17	(Y-BR)	[Y]					32	
		BT or BZ	18	(BR-Y)	[BR]					31	
		RO	19	(Y-S)	[Y]					34	
		LF	20	(S-Y)	[S]					1	
10-Volt ac Supply		GRD	21	(V-BL)	[V]					27	
		10V AC	22	(BL-V)	[BL]					26	
Lamp Supply		± or LB	23	(V-O)	[V]					9	
		± or LB	24	(O-V)	[O]					10	
W Option‡ to External Interrupter		CO§	25	(V-G)	[V]		18A				
		TO	26	(G-V)	[G]						22
		BT1 or BZ1	27	(V-BR)	[V]						35
		BT or BZ	28	(BR-V)	[BR]						24
		RO	29	(V-S)	[V]		40A				
		LF	30	(S-V)	[S]		9B				
Manual Intercom		T	31	(W-BL)	[W]					30	
		R	32	(BL-W)	[BL]					40	
		L	33	(W-O)	[W]					28	
Lamp Supply		± or LB	34	(O-W)	[O]					19	
		± or LB	35	(W-G)	[W]					20	
Spare			36	(G-W)	[G]						
			37	(W-BR)	[W]						
			38	(BR-W)	[BR]						
			39	(W-S)	[W]						
			40	(S-W)	[S]						

GREEN BINDER

BROWN BINDER

*Select spare pair locally.

†When KTU is equipped with a 64B1-100 cable terminal, strap (X option) as follows: on terminal strip H strap terminal 15 to 25, 16 to 26, 17 to 27, 18 to 28, 20 to 30. Also make sure the following straps are not provided:

from terminal		to terminal	
37 (232A [MD] or B)	31 (232A [MD] or B)	18 (222A)	24 (224A [MD] or B)
36 (232A [MD] or B)	1 (232A [MD] or B)	22 (224A [MD] or B)	9B (222A)
32 (232A [MD] or B)		35 (224A [MD] or B	

‡ For W option remove all straps mentioned above and connect terminals 25 through 30 on TSH to appropriate terminals on an external interrupter.

§ The CO lead connection is required when an associated No. 1A, 1A1, or 1A2 system flashing circuit is used as part of the No. 6A installation.

( ) Current color code.

[ ] MD color code.

¶ 232C KTU has factory-placed strap from 37 to 39.

** Improper connection of battery and ground may result in damage to electrolytic capacitor.

SERVICE

1A1 KEY TELEPHONE SYSTEM

KEY SERVICE UNITS

1. GENERAL

1.01 This section contains connection information for the 300-, 301-(MD), 302-(MD), 310-, 311-, 2301-, and 2311-type KSUs.

1.02 Information in this section was formerly contained in Sections 518-240-400, 518-240-401, 518-245-101, and 518-245-102, which are hereby canceled.

1.03 For additional information, refer to CD- and SD-69433-01 (300-, 301-, and 302-type); CD- and SD-69434-01 (310-type); and CD and SD-68480-01 (311-type).

2. CONNECTIONS

2.01 Key and power cable connections and strapping between 202D, 230B, 232B, and 207C KTUs for the 300-, 301-, 302-type KSUs, and for the 310-, 311-type KSUs are shown in Fig. 4 and 5, respectively. Key and power cable connections and strappings between the 230B, 238A, 207C, and 216A for the 310- and 311-type KSUs are shown in Fig. 6.

300-Type Key Service Unit

2.02 KTUs are interwired. Connect key or running cables directly to the screw terminals on back of the KTUs. See Table A for features, lead designations, and connections. When power is not provided, connect an external power source as shown in Table B.

301-Type Key Service Unit

2.03 Connect key or running cables in Columns A through E of 66-type connecting block (Fig. 2). See Table A for features, lead designations, and terminal numbers on connecting blocks A and B.

2.04 When power is not provided, connect an external power source to Column A of connecting block A as shown in Table B.

302-Type Key Service Unit

2.05 An A75A connector cable is connected to 66-Type Connecting block as follows:

- Blue binder (connector 1) to Column A.
- Orange binder (connector 2) to Column B
- Green binder (connector 3) to Column C.

2.06 Each connector provides for:

- All Line features
- Dial intercommunicating line
- Common audible signal for all line circuits.

2.07 See Table C for features, lead designations, and connections to blocks A and B.

2.08 Some pairs in each binder group of the A75A connector cable are not terminated. These pairs may be used for dial intercom codes and miscellaneous circuits by terminating on the proper or vacant terminals on the 66-type connecting block.



These vacant terminals may have wires terminated on Column F that are lying dead at the apparatus end. Make sure that these terminals are cleared before using for miscellaneous circuits.

2.09 A telephone set may be connected to each connector of the A75A connector cable or extended with a B25A connector cable to a bridging adapter or equivalent.

© American Telephone and Telegraph Company, 1970
Printed in U.S.A.

2.10 Fig. 3 shows possible arrangements for intercom signal leads and for extending stations using a 3-way bridging adapter.

2.11 Connect additional key or running cables to Columns D and E of 66-type connecting blocks (see Fig. 2). See Table A for features, lead designations, and connections to terminal numbers on connecting blocks A and B.

2.12 When power is not provided, connect an external power source to Column A of connecting block A (see Table B).

2.13 When key telephone sets are multipled through bridging adapters with sets furnishing features on a per station basis such as speakerphone, line exclusion control, cutoff key, push button and buzzers, station busy lamps, etc, certain control leads must be disconnected, insulated, and stored at the bridged station. This is necessary to avoid interference with working circuits. Refer to appropriate section for the telephone set used.

310-Type Key Service Unit

2.14 KTUs are interwired. Connect key or running cables directly to the screw terminals on the back of the KTUs. See the following tables for features, lead designations, and connections.

- Table D, 4 to 7 lines
- Table F, 9 to 13 lines

2.15 When power is not provided, connect an external power source. See the following tables:

- Table E, 4 to 7 lines
- Table G, 9 to 13 lines

311-Type Key Service Unit

2.16 Connect key or running cables, starting on Column A of the 66-type connecting blocks (Fig. 2). See the following tables for features, lead designations, and terminal numbers on connecting blocks.

- Table D, 4 to 7 lines
- Table F, 9 to 13 lines

2.17 When power is not provided, connect an external power source to Column A of connecting block D. See the following tables:

- Table E, 4 to 7 lines
- Table G, 9 to 13 lines

2301- and 2311-Type Key Service Units

2.18 Connections for terminating running and/or key cables and external power wiring to the 66-type connecting blocks are shown in Tables J and K for the 2301- and 2311-type KSUs, respectively. Interwiring of connections between individual KTUs and the connecting blocks is also shown.

2.19 For further information see CDs and SDs 69352-01 and 69361-01 for the 2301- and 2311-type KSUs, respectively.

Signaling Circuit For Manual Intercom

2.20 Fig. 7 shows an arrangement for manual signaling when dial intercom is not provided. This arrangement uses terminals normally used for dial intercom. (See ***Read*** after 2.08).

Wink-Hold Circuit

2.21 All packages are wired for the wink-hold feature.

Steady Hold

2.22 For steady hold feature see the connection and strapping diagram for the particular KSU.

2.23 *Connection Index*

Fig. 1—Method of Counting 66B1-25 Connecting Blocks

Fig. 2—Key or Running Cable Terminations on 66-Type Connecting Block For 301-, 302-, and 311-Type KSUs

Fig. 3—Suggested Intercom Signal Connections Using 564HDR or 565HDR Telephone Sets and 302-Type KSU

Fig. 4—300-, 301- and 302-Type KSUs, Connections and Strapping (202D, 230B, 232B, and 207C KTUs)

Fig. 5—310-or 311-Type KSU (4 to 7 Lines) Connections and Strapping (202D, 230B, 232B, and 207C KTUs)

Fig. 6—310- or 311-Type KSU (9 to 13 Lines) Connections and Strapping (230B, 238A, 207C, and 216A KTUs)

Fig. 7—Typical Connections for Manual Signaling When Dial Intercom Circuit is Not Used

Table A—301- and 302-Type KSUs, Connections Between Apparatus and 66-Type Connecting Blocks

Table B—301- and 302-Type KSUs, Connections between Block A of 66-Type Connecting Block, Apparatus, and Power Plant

Table C—302-Type KSU, Connections Between A75A Connector Cable and 66-Type Connecting Blocks

Table D—311-Type KSU (4 - 7 Lines) Connections Between Apparatus and 66-Type Connecting Blocks

Table E—311-Type KSU (4-7 Lines) Connections Between Apparatus, 66-Type Connecting Block, and Power Plant

Table F—311-Type KSU (9-13 Lines) Connections Between Apparatus and 66-Type Connecting Blocks

Table G—311-Type KSU (9-13 Lines) Connections Between Apparatus, 66-Type Connecting Block, and Power Plant

Table H—310-or 311-Type KSU (9 to 13 Lines) Line Circuit Portion of 238A KTU

Table I—310- or 311-Type KSU (9 to 13 Lines) 230B KTU

Table J—2301-Type KSU Connections Between Apparatus and 66-Type Connecting Block

Table K—2311-Type KSU Connections

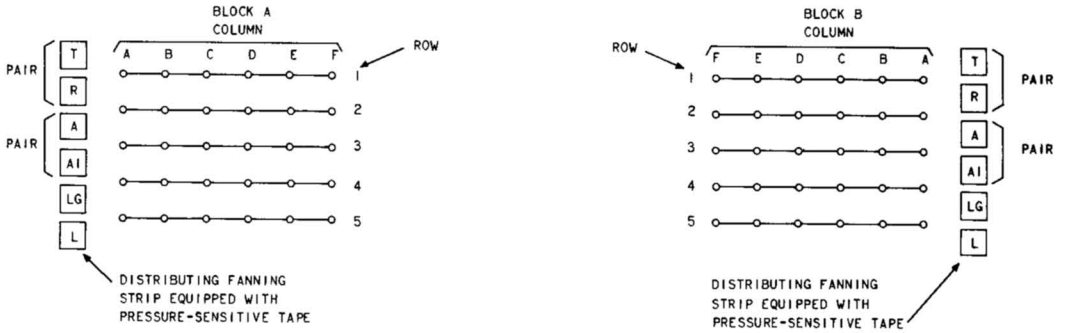

Fig. 1—Method of Counting 66B1-25 Connecting Blocks

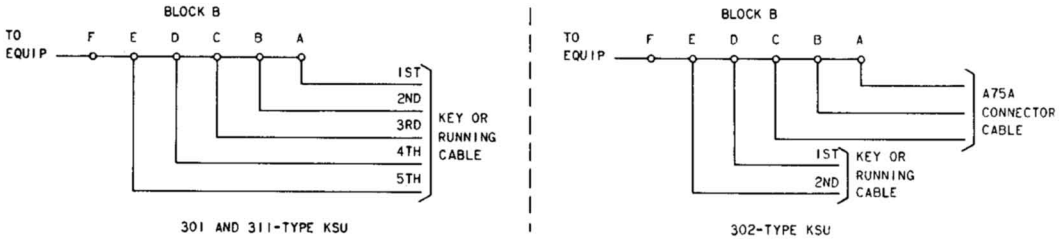

Fig. 2—Key or Running Cable Terminations on 66-Type Connecting Block For 301-, 302-, and 311-Type KSUs

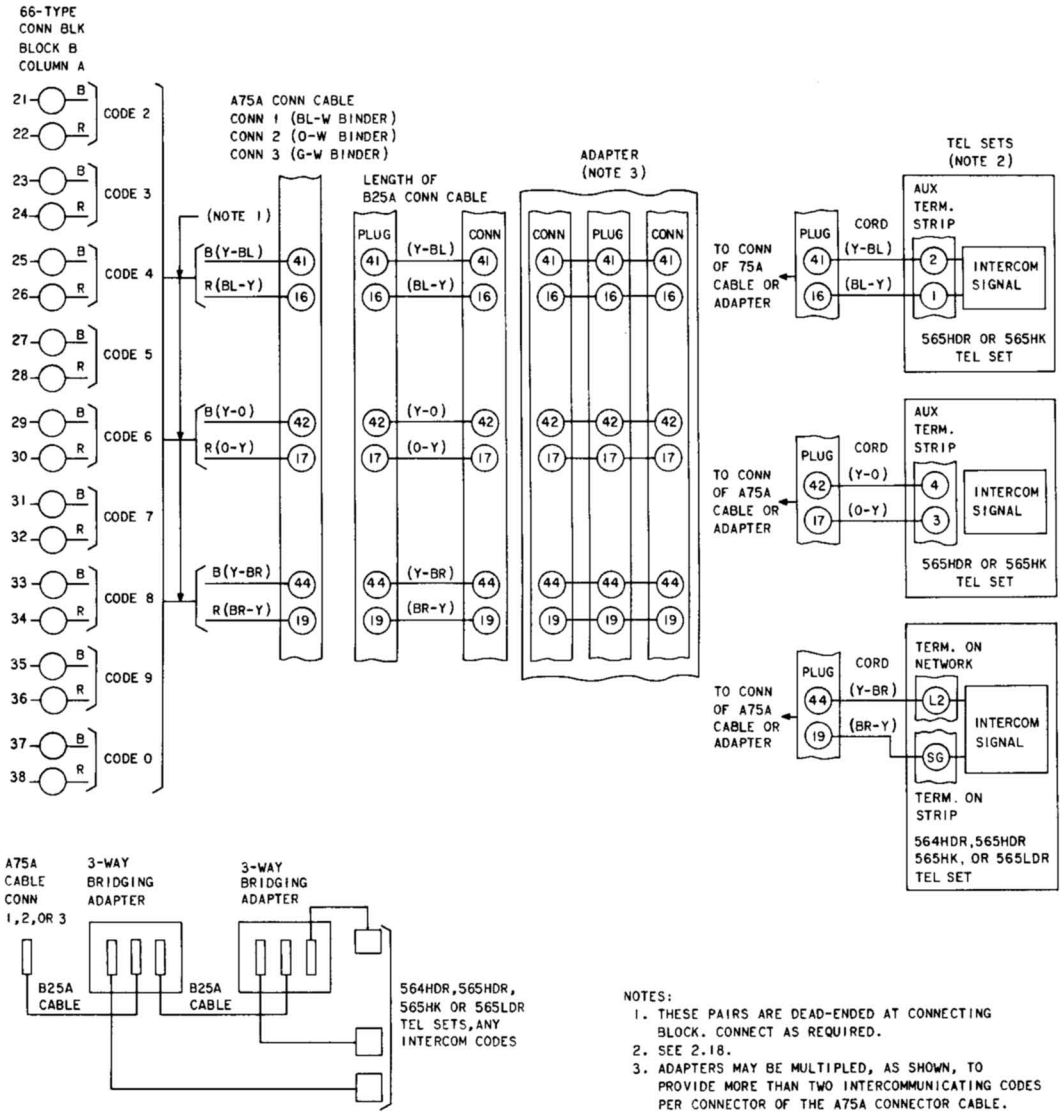

NOTES:
1. THESE PAIRS ARE DEAD-ENDED AT CONNECTING BLOCK. CONNECT AS REQUIRED.
2. SEE 2.18.
3. ADAPTERS MAY BE MULTIPLED, AS SHOWN, TO PROVIDE MORE THAN TWO INTERCOMMUNICATING CODES PER CONNECTOR OF THE A75A CONNECTOR CABLE.

Fig. 3—Suggested Intercom Signal Connections Using 564HDR or 565HDR Telephone Sets, and 302-Type KSU

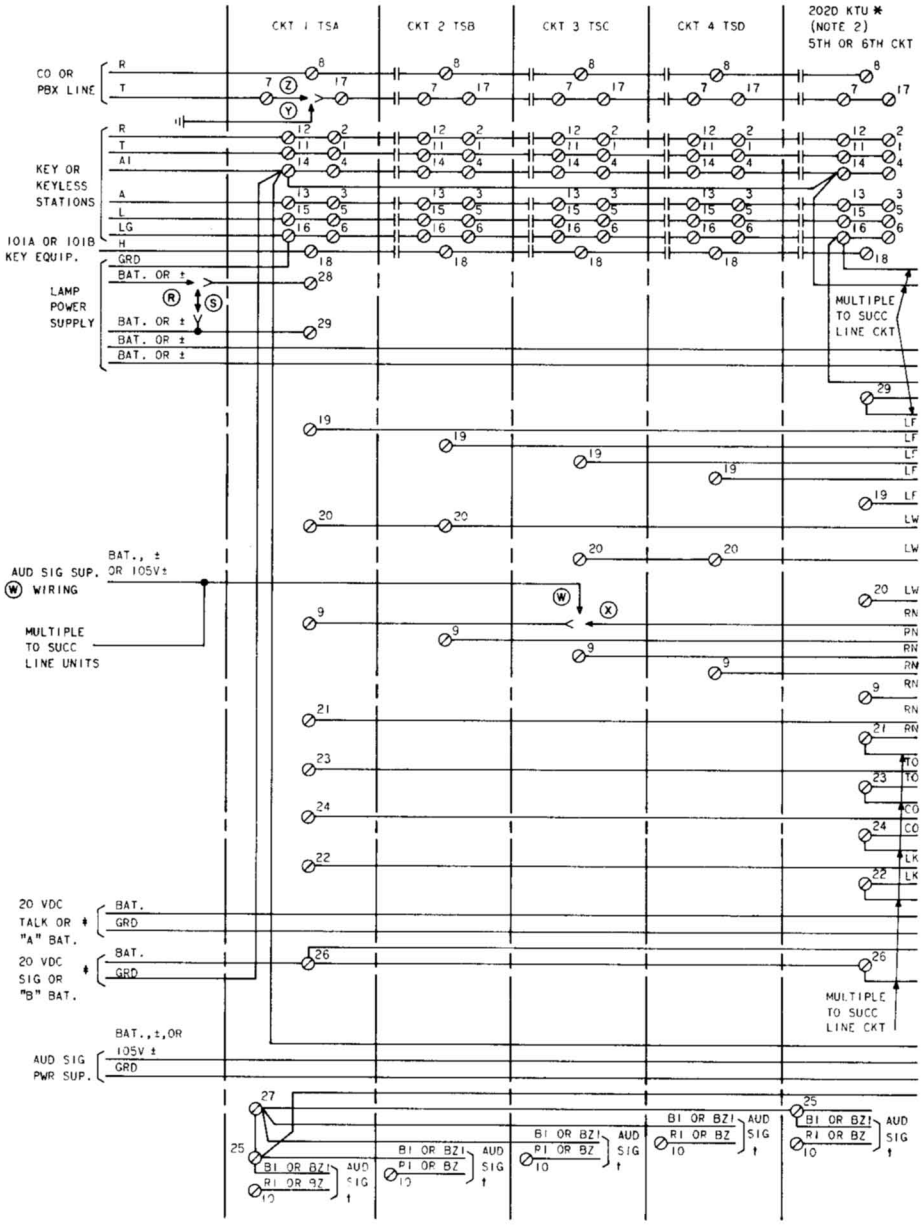

Fig. 4—300-, 301- and 302-Type KSUs, Connections and Strapping (202D, 230D, 232B, and 207C KTUs) (Sheet 1)

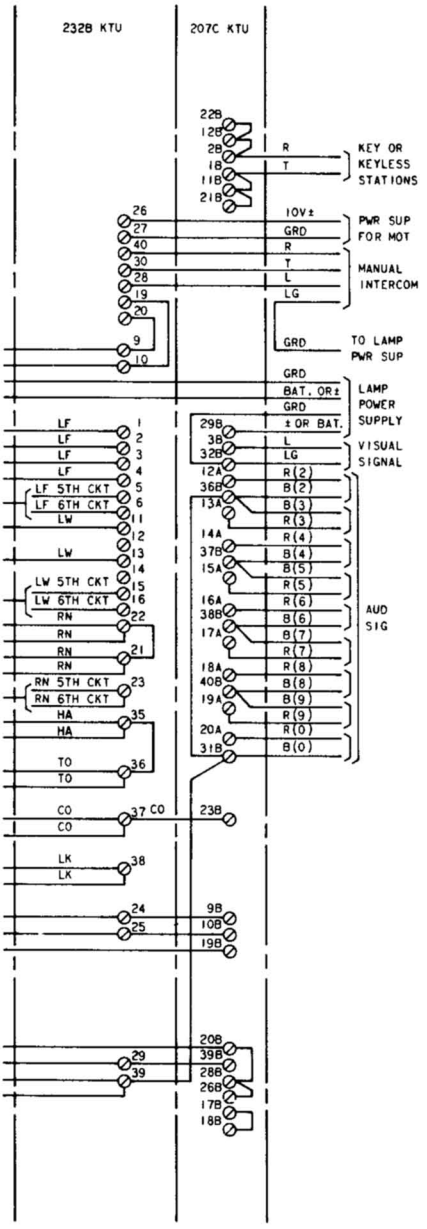

NOTES:

1. WHEN STEADY HOLD LAMP IS REQUIRED INSTEAD OF LAMP WINK, PROVIDE STRAPS AS FOLLOWS:
   202D KTU-TERMS. 20 AND 29
   230B KTU-CKTS 1 AND 2 TERMS. 20A,B AND 29A
   CKTS 3 AND 4 TERMS. 20C,D AND 28A
   CAUTION: IF PACKAGE INTERRUPTER IS USED TO FURNISH LAMP WINK FOR OTHER SYSTEMS, DISCONNECT AND TAPE LW LEADS AT TERMINAL 20 OF EACH LINE CIRCUIT NOT USING THE WINK FEATURE.
2. SYMBOL (||) MEANS ADJACENT TERMINALS ARE NOT STRAPPED. REFER TO LEGEND FOR TERMINATIONS.

* WIRED FOR METALLIC RINGING AND INTERRUPTED AUDIBLE
† FOR COMMON AUDIBLE, STRAP ALL NO. 10 TERMINALS
♦ A AND B GROUNDS MUST BE CONNECTED TOGETHER AT POWER SUPPLY

WIRING		OPTION
METALLIC RINGING FURNISHED		Z
GROUNDED RINGING		Y
INTERRUPTED AUDIBLE SIG (FURNISHED)		X
STEADY AUDIBLE SIGNAL		W
LAMP SUPPLY	MAX 40 LAMPS (FURNISHED)	S
	MAX 80 LAMPS	R

Fig. 4—300-, 301- and 302-Type KSUs, Connections and Strapping (202D, 230B, 232B, and 207C KTUs) (Sheet 2)

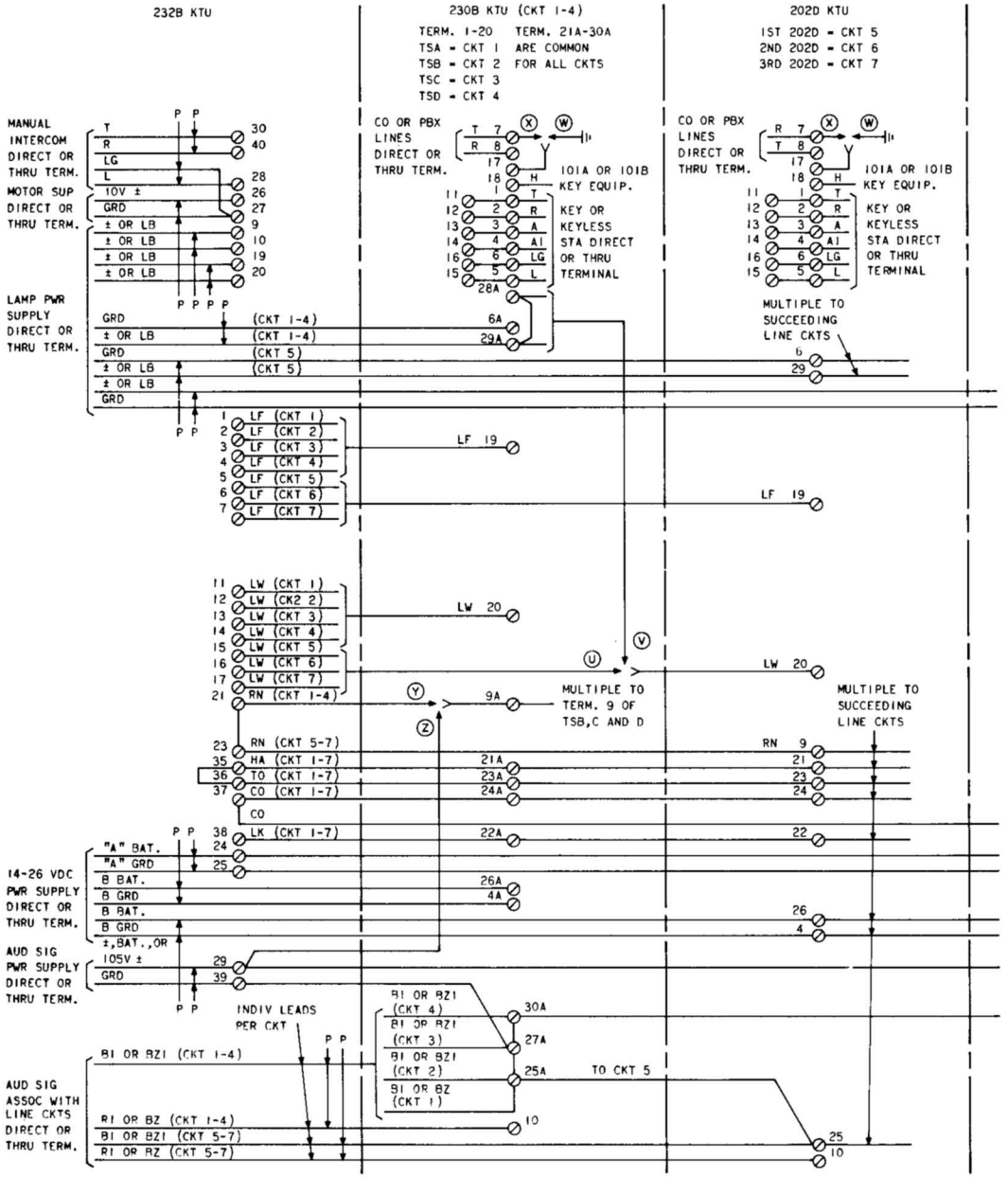

Fig. 5—310- or 311-Type KSU (4 to 7 Lines) Connections and Strapping (202D, 230B, 232B, and 207C KTUs) (Sheet 1)

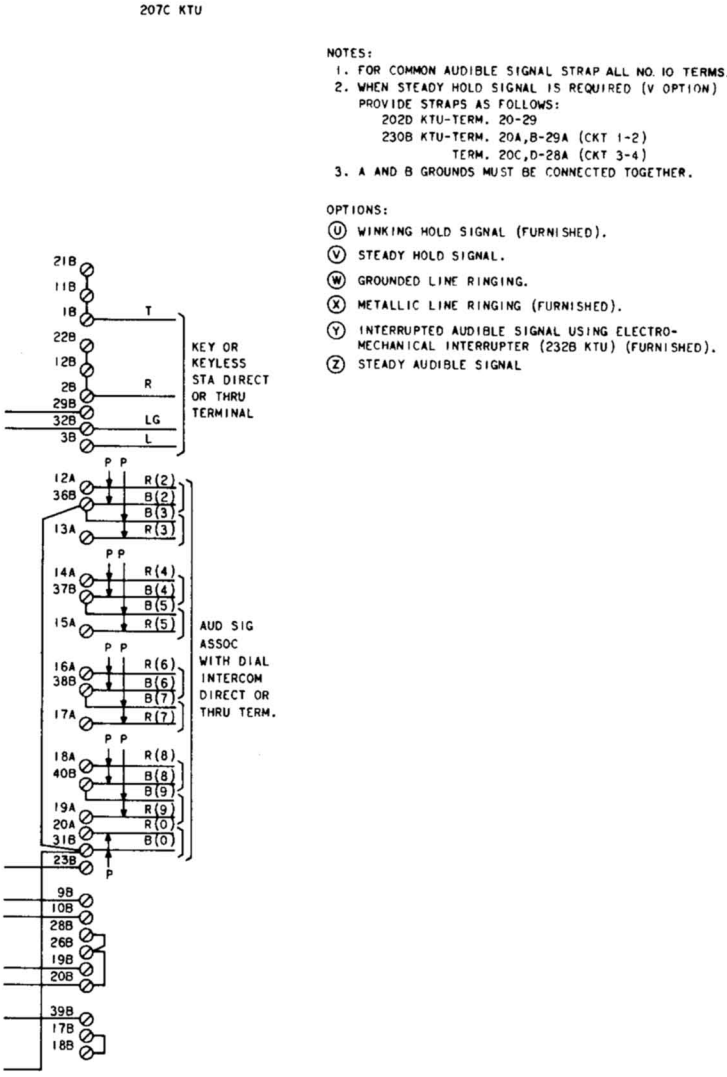

Fig. 5—310- or 311-Type KSU (4 to 7 Lines) Connections and Strapping (202D, 230B, 232B, and 207C KTUs) (Sheet 2)

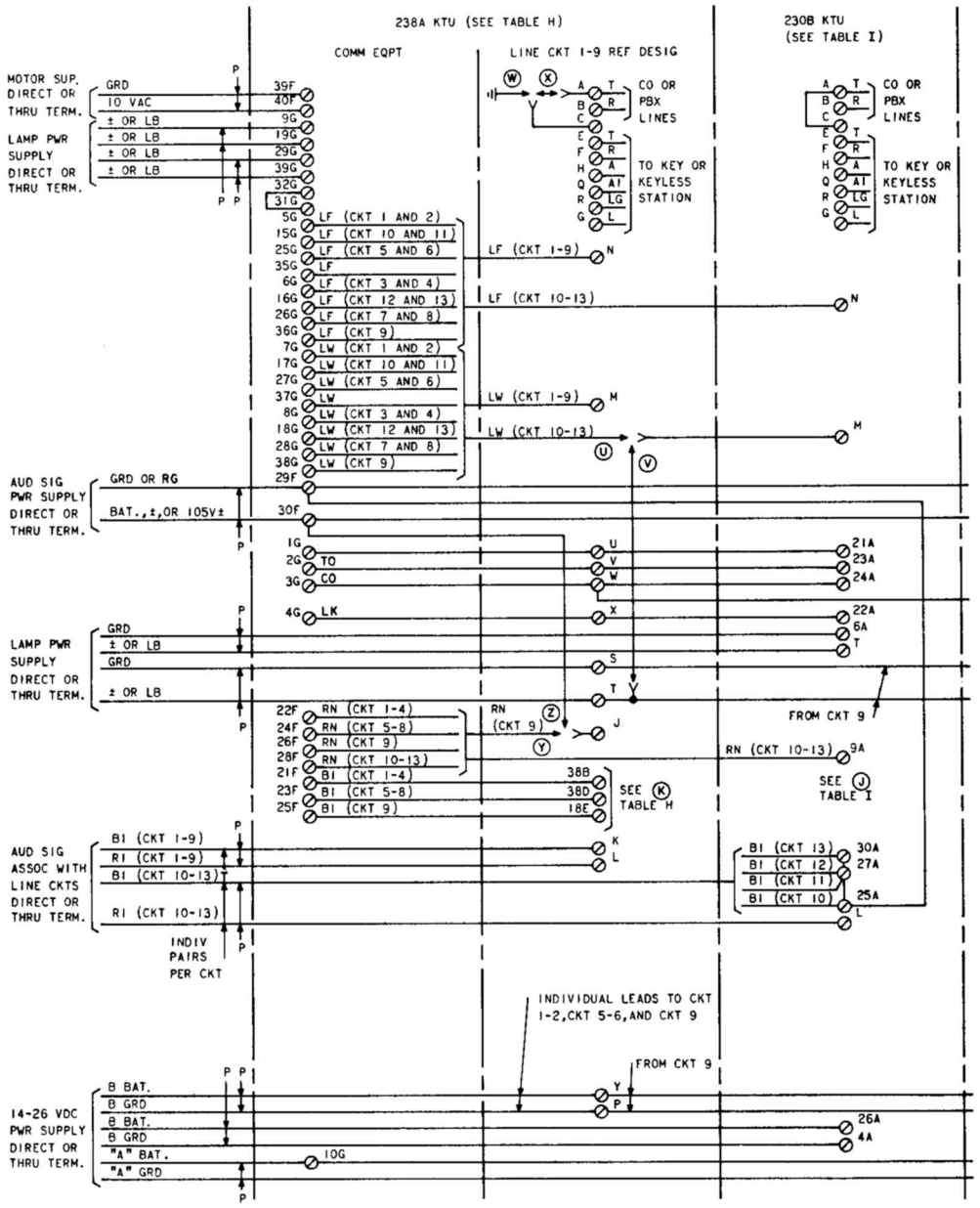

Fig. 6—310- or 311-Type KSU (9 to 13 Lines) Connections and Strapping (230B 238A, 207C, and 216A KTUs) (Sheet 1)

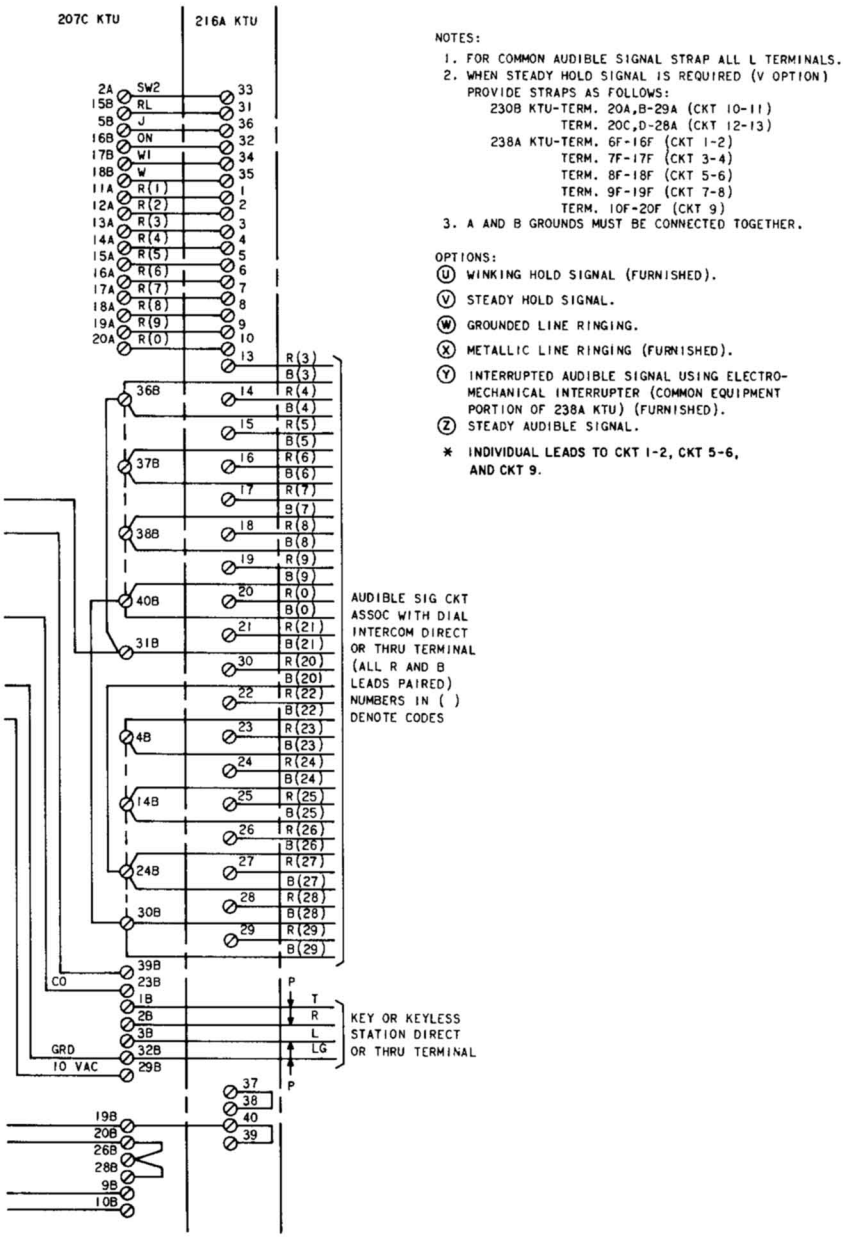

Fig. 6—310- or 311-Type KSU (9 to 13 Lines) Connections and Strapping (230B, 238A, 207C, and 216A KTUs) (Sheet 2)

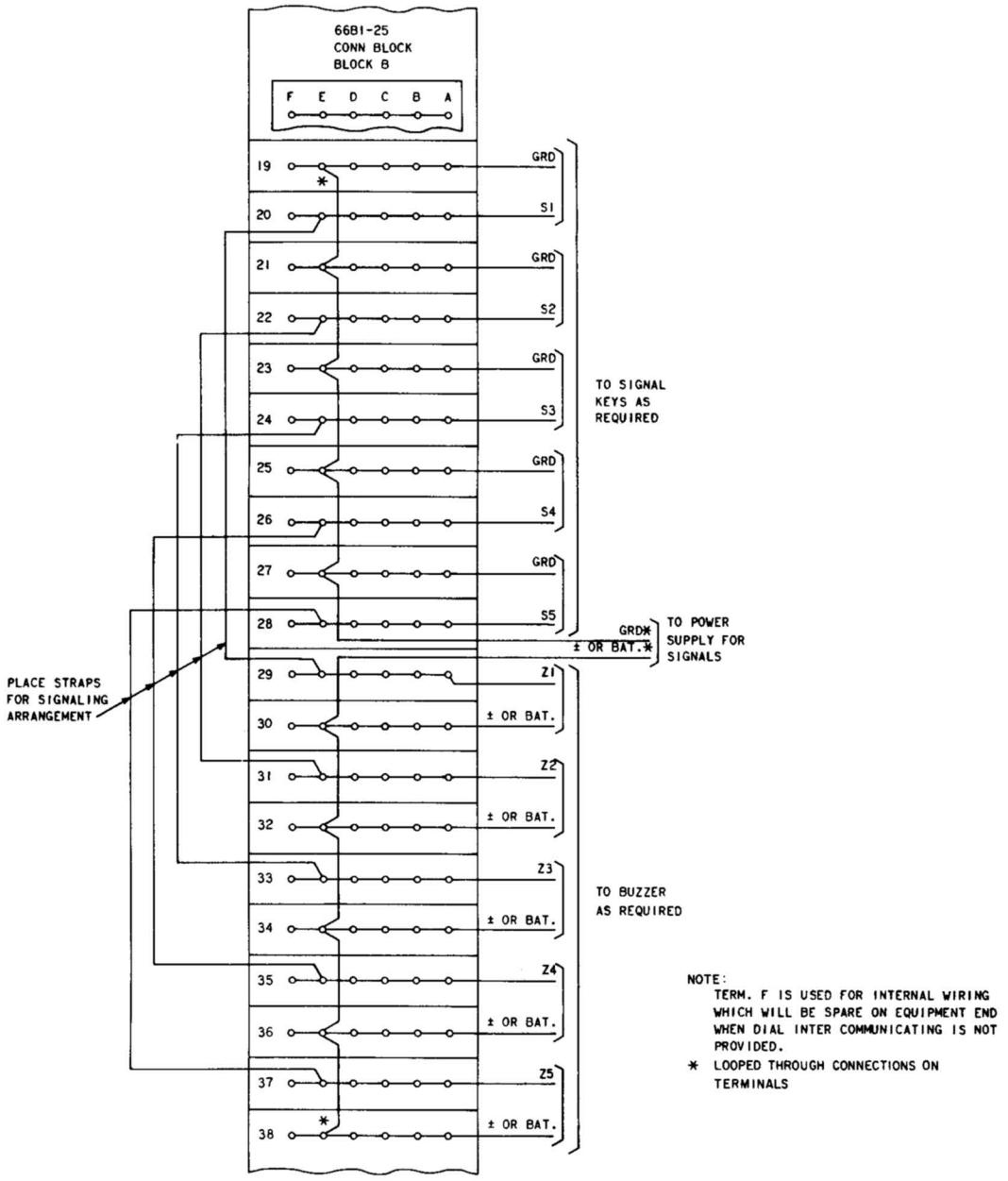

Fig. 7—Typical Connections for Manual Signaling When Dial Intercom Circuit is Not Used

TABLE A

301- AND 302-TYPE KSU'S, CONNECTIONS BETWEEN APPARATUS AND 66-TYPE CONNECTING BLOCKS

FEATURE	LEAD DESIG	BLOCK A 66B1-25 CONN BLK ROW	BLOCK A 66B1-25 CONN BLK COL	BLOCK A 66B1-25 CONN BLK CABLE COLOR O-W BINDER	TERMINAL ON 232B KTU	TERMINAL ON 230B KTU	TERMINAL ON 202D KTU		TERMINAL ON 207C KTU
Line 1	T	1	F	W-BL		1A			
	R	2		BL-W		2A			
	A	3		W-O		3A			
	A1	4		O-W		4A			
	LG	5		W-G		6A			
	L	6		G-W		5A			
Line 2	T	7		W-BR		1B			
	R	8		BR-W		2B			
	A	9		W-S		3B			
	A1	10		S-W		4B			
	LG	11		R-BL		6B			
	L	12		BL-R		5B			
Line 3	T	13		R-O		1C			
	R	14		O-R		2C			
	A	15		R-G		3C			
	A1	16		G-R		4C			
	LG	17		R-BR		6C			
	L	18		BR-R		5C			
Line 4	T	19		R-S		1D			
	R	20		S-R		2D			
	A	21		BK-BL		3D			
	A1	22		BL-BK		4D			
	LG	23		BK-O		6D			
	L	24		O-BK		5D			
Line 5	T	25		BK-G			1		
	R	26		G-BK			2		
	A	27		BK-BR			3	1st	
	A1	28		BR-BK			4		
	LG	29		BK-S			6		
	L	30		S-BK			5		
Line 6	T	31		Y-BL			1		
	R	32		BL-Y			2		
	A	33		Y-O			3	2nd	
	A1	34		O-Y			4		
	LG	35		Y-G			6		
	L	36		G-Y			5		
Motor Supply	GRD 10V±	37 38							
Spare		39 40							
Lamp Supply	± or BAT. ± or BAT. GRD ± or BAT.	41 42 43 44							
Audible Signal Supply	GRD BAT., ±, or 105V ±	45 46							
20v dc Talk or A Bat.	GRD BAT.	47 48							
20v dc Sig or B Bat.	GRD BAT.	49 50							

See Table B for Power Connections

TABLE A (Cont)

301- AND 302-TYPE KSU'S CONNECTIONS BETWEEN APPARATUS AND 66-TYPE CONNECTING BLOCKS

FEATURE		LEAD DESIG	BLOCK B 66B1-25 CONN BLK ROW	BLOCK B 66B1-25 CONN BLK COL	BLOCK B 66B1-25 CONN BLK CABLE COLOR BL-W BINDER	TERMINAL ON 232B KTU	TERMINAL ON 230B KTU	TERMINAL ON 202D KTU		TERMINAL ON 207C KTU
Manual Intercom Line		T R	1 2		W-BL BL-W	30 40				
		LG L	3 4		W-O O-W	27 28				
Audible Signal*	Line 1	B1 or BZ1 R1 or BZ	5 6		W-G G-W		25A 10A			
	Line 2	B1 or BZ1 R1 or BZ	7 8		W-BR BR-W		25A 10B			
	Line 3	B1 or BZ1 R1 or BZ	9 10		W-S S-W		27A 10C			
	Line 4	B1 or BZ1 R1 or BZ	11 12		R-BL BL-R		27A 10D			
	Line 5	B1 or BZ1 R1 or BZ	13 14		R-O O-R			25 10	1st	
	Line 6	B1 or BZ1 R1 or BZ	15 16		R-G G-R			25 10	2nd	
Dial Selective Intercom Line		T R	17 18		R-BR BR-R					1B 2B
		LG L	19 20		R-S S-R					32B 3B
		B(2) R(2)	21 22		BK-BL BL-BK					36B 12A
		B(3) R(3)	23 24		BK-O O-BK					36B 13A
		B(4) R(4)	25 26	F	BK-G G-BK					37B 14A
		B(5) R(5)	27 28		BK-BR BR-BK					37B 15A
		B(6) R(6)	29 30		BK-S S-BK					38B 16A
		B(7) R(7)	31 32		Y-BL BL-Y					38B 17A
		B(8) R(8)	33 34		Y-O O-Y					40B 18A
		B(9) R(9)	35 36		Y-G G-Y					40B 19A
		B(0) R(0)	37 38		Y-BR BR-Y					31B 20A
CO or PBX	Line 1	T R	39 40		Y-S S-Y		7A 8A			
	Line 2	T R	41 42		V-BL BL-V		7B 8B			
	Line 3	T R	43 44		V-O O-V		7C 8C			
	Line 4	T R	45 46		V-G G-V		7D 8D			
	Line 5	T R	47 48		V-BR BR-V			7 8	1st	
	Line 6	T R	49 50		V-S S-V			7 8	2nd	

* On the 302 KSU the R1 leads and the B1 leads are factory-strapped.

TABLE B

301- AND 302-TYPE KSU'S, CONNECTIONS BETWEEN BLOCK A OF 66-TYPE CONNECTING BLOCK, APPARATUS, AND POWER PLANT

FEATURE	LEAD DESIG	CONNECTING BLOCK A															
		ROW ON 66B1-25 CONN BLOCK	COL F			COL E			COL D			COL C			COL A		
			CABLE COLOR CODE	TO		CABLE COLOR CODE	TO		CABLE COLOR CODE	TO		CABLE COLOR CODE	TO		CABLE COLOR CODE	TO	
				KTU	TERM.		KTU	TERM.		KTU	TERM.		KTU	TERM.		J86731D POWER PLANT	
Motor Supply	GRD 10V ±	37 38	Y-BR BR-Y	232B	27 26										BL2Y BL1Y	10V AC	G B
Spare																	
Lamp Supply	± or BAT. ± or BAT.	41 42	BR* S*	232B 232B	9 10	BR-W* S-W*	1st 202D	29							W R-W	10V AC	B‡ B‡
	GRD ± or BAT.	43 44	BL-W† BL†	230B 230B	6A 28A	O-W† O†	230B 230B	16A 29A	G-W† G†	207C 207C	32B 29B	Y-W† Y†	1st 202D	16	R-Y R		G B‡
Audible Signal Supply	GRD ±, BAT., or 105V ±	45 46	V-G G-V	232B	39 29												
20v dc Talk or A Bat.	GRD BAT.	47 48	V-BR BR-V	232B	25 24										G2Y G1Y	20V DC Talk	G B
20v dc Sig or B Bat.	GRD BAT.	49 50	V-S S-V	230B	4A 26A										S2BK S1BK	20V DC Sig	G B

* 18 Gauge — G-W Binder.

† 20 Gauge — G-W Binder.

‡ Use loop through method of termination for terminals 41, 42, and 43.

TABLE C

302-TYPE KSU, CONNECTIONS BETWEEN A75A CONNECTOR CABLE AND 66-TYPE CONNECTING BLOCKS

CONN 1							CONN 2					CONN 3				
FEATURE	LEAD DESIG	CONN 1 BL-W BINDER		TERMINATION ON 66-TYPE CONN BLOCK			CONN 2 O-W BINDER		TERMINATION ON 66-TYPE CONN BLOCK			CONN 3 G-W BINDER		TERMINATION ON 66-TYPE CONN BLOCK		
		PIN NO.	CABLE COLOR	ROW	BLK	COL	PIN NO.	CABLE COLOR	ROW	BLK	COL	PIN NO.	CABLE COLOR	ROW	BLK	COL
Line 1	T	26	W-BL	1	A	A	26	W-BL	1	A	B	26	W-BL	1	A	C
	R	1	BL-W	2			1	BL-W	2			1	BL-W	2		
	A	27	W-O	3			27	W-O	3			27	W-O	3		
	A1	2	O-W	4			2	O-W	4			2	O-W	4		
	LG	28	W-G	5			28	W-G	5			28	W-G	5		
	L	3	G-W	6			3	G-W	6			3	G-W	6		
Line 2	T	29	W-BR	7			29	W-BR	7			29	W-BR	7		
	R	4	BR-W	8			4	BR-W	8			4	BR-W	8		
	A	30	W-S	9			30	W-S	9			30	W-S	9		
	A1	5	S-W	10			5	S-W	10			5	S-W	10		
	LG	31	R-BL	11			31	R-BL	11			31	R-BL	11		
	L	6	BL-R	12			6	BL-R	12			6	BL-R	12		
Line 3	T	32	R-O	13			32	R-O	13			32	R-O	13		
	R	7	O-R	14			7	O-R	14			7	O-R	14		
	A	33	R-G	15			33	R-G	15			33	R-G	15		
	A1	8	G-R	16			8	G-R	16			8	G-R	16		
	LG	34	R-BR	17			34	R-BR	17			34	R-BR	17		
	L	9	BR-R	18			9	BR-R	18			9	BR-R	18		
Line 4	T	35	R-S	19			35	R-S	19			35	R-S	19		
	R	10	S-R	20			10	S-R	20			10	S-R	20		
	A	36	BK-BL	21			36	BK-BL	21			36	BK-BL	21		
	A1	11	BL-BK	22			11	BL-BK	22			11	BL-BK	22		
	LG	37	BK-O	23			37	BK-O	23			37	BK-O	23		
	L	12	O-BK	24			12	O-BK	24			12	O-BK	24		
Dial Intercom	T	38	BK-G	17	B		38	BK-G	17	B		38	BK-G	17	B	
	R	13	G-BK	18			13	G-BK	18			13	G-BK	18		
Spare*		39	BK-BR				39	BK-BR				39	BK-BR			
		14	BR-BK				14	BR-BK				14	BR-BK			
Dial Intercom	LG	40	BK-S	19	B	A	40	BK-S	19	B	B	40	BK-S	19	B	C
	L	15	S-BK	20			15	S-BK	20			15	S-BK	20		
Spare*		41	Y-BL				41	Y-BL				41	Y-BL			
		16	BL-Y				16	BL-Y				16	BL-Y			
		42	Y-O				42	Y-O				42	Y-O			
		17	O-Y				17	O-Y				17	O-Y			
		43	Y-G				43	Y-G				43	Y-G			
		18	G-Y				18	G-Y				18	G-Y			
		44	Y-BR				44	Y-BR				44	Y-BR			
		19	BR-Y				19	BR-Y				19	BR-Y			
Com Aud	B1 or BZ1 R1 or BZ	45	Y-S	5	B	A	45	Y-S	7	B	A	45	Y-S	9	B	A
		20	S-Y	6			20	S-Y	8			20	S-Y	10		
Spare*		46	V-BL				46	V-BL				46	V-BL			
		21	BL-V				21	BL-V				21	BL-V			
		47	V-O				47	V-O				47	V-O			
		22	O-V				22	O-V				22	O-V			
		48	V-G				48	V-G				48	V-G			
		23	G-V				23	G-V				23	G-V			
		49	V-BR				49	V-BR				49	V-BR			
		24	BR-V				24	BR-V				24	BR-V			
		50	V-S				50	V-S				50	V-S			
		25	S-V				25	S-V				25	S-V			

* Dead-ended and stored at connecting blocks. Connect as required.

TABLE D

311-TYPE KSU (4-7 LINES) CONNECTIONS BETWEEN APPARATUS AND 66-TYPE CONNECTING BLOCKS

FEATURE	LEAD DESIGNATION	BLOCK A 66-TYPE CONNECTING BLOCK			TERMINAL ON 232B KTU	TERMINAL ON 230B KTU	TERMINAL ON 202D KTU		TERMINAL ON 207C KTU
		ROW	COL	CABLE COLOR BLUE BINDER					
Line 1	T	1	↑	W-BL		1A			
	R	2		BL-W		2A			
	A	3		W-O		3A			
	A1	4		O-W		4A			
	LG	5		W-G		6A			
	L	6		G-W		5A			
Line 2	T	7		W-BR		1B			
	R	8		BR-W		2B			
	A	9		W-S		3B			
	A1	10		S-W		4B			
	LG	11		R-BL		6B			
	L	12		BL-R		5B			
Line 3	T	13		R-O		1C			
	R	14		O-R		2C			
	A	15		R-G		3C			
	A1	16		G-R		4C			
	LG	17		R-BR		6C			
	L	18		BR-R		5C			
Line 4	T	19		R-S		1D			
	R	20		S-R		2D			
	A	21		BK-BL		3D			
	A1	22		BL-BK		4D			
	LG	23		BK-O		6D			
	L	24		O-BK		5D			
Line 5	T	25	F	BK-G			1	1st	
	R	26		G-BK			2		
	A	27		BK-BR			3		
	A1	28		BR-BK			4		
	LG	29		BK-S			6		
	L	30		S-BK			5		
Line 6	T	31		Y-BL			1	2nd	
	R	32		BL-Y			2		
	A	33		Y-O			3		
	A1	34		O-Y			4		
	LG	35		Y-G			6		
	L	36		G-Y			5		
Line 7	T	37		Y-BR			1	3rd	
	R	38		BR-Y			2		
	A	39		Y-S			3		
	A1	40		S-Y			4		
	LG	41		V-BL			6		
	L	42		BL-V			5		
Manual Intercom	T	43		V-O	30				
	R	44		O-V	40				
	LG	45		V-G	27				
	L	46		G-V	28				
Dial Intercom	T	47		V-BR					1B
	R	48		BR-V					2B
	LG	49		V-S					32B
	L	50	↓	S-V					3B

TABLE D (Cont)

311-TYPE KSU (4-7 LINES) CONNECTIONS BETWEEN APPARATUS AND 66-TYPE CONNECTING BLOCKS

FEATURE		LEAD DESIGNATION	BLOCK B 66-TYPE CONNECTING BLOCK ROW	COL	CABLE COLOR ORANGE BINDER	TERMINAL ON 232B KTU	TERMINAL ON 230B KTU	TERMINAL ON 202D KTU		TERMINAL ON 207C KTU
Aud Sig Assoc With Dial Intercom	Code 2	B R	1 2	F	W-BL BL-W					36B 12A
	3	B R	3 4		W-O O-W					36B 13A
	4	B R	5 6		W-G G-W					37B 14A
	5	B R	7 8		W-BR BR-W					37B 15A
	6	B R	9 10		W-S S-W					38B 16A
	7	B R	11 12		R-BL BL-R					38B 17A
	8	B R	13 14		R-O O-R					40B 18A
	9	B R	15 16		R-G G-R					40B 19A
	0	B R	17 18		R-BR BR-R					31B 20A
Aud Sig Assoc With Line Ckts	Line 1	B1 or BZ1 R1 or BZ	19 20		R-S S-R		25A 10A			
	Line 2	B1 or BZ1 R1 or BZ	21 22		BK-BL BL-BK		25A 10B			
	Line 3	B1 or BZ1 R1 or BZ	23 24		BK-O O-BK		27A 10C			
	Line 4	B1 or BZ1 R1 or BZ	25 26		BK-G G-BK		30A 10D			
	Line 5	B1 or BZ1 R1 or BZ	27 28		BK-BR BR-BK			25 10	1st	
	Line 6	B1 or BZ1 R1 or BZ	29 30		BK-S S-BK			25 10	2nd	
	Line 7	B1 or BZ1 R1 or BZ	31 32		Y-BL BL-Y			25 10	3rd	
Vacant			33 34							
			35 36							
			37 38							
			39 40							
			41 42							
			43 44							
			45 46							
			47 48							
			49 50							

TABLE D (Cont)

311-TYPE KSU (4-7 LINES) CONNECTIONS BETWEEN APPARATUS AND 66-TYPE CONNECTING BLOCKS

FEATURE		LEAD DESIGNATION	BLOCK D 66-TYPE CONNECTING BLOCK ROW	COL	CABLE COLOR ORANGE BINDER	TERMINAL ON 230B KTU	TERMINAL ON 202D KTU	
Co or PBX Lines	Line 1	T R	1 2	F	Y-O O-Y	7A 8A		
	Line 2	T R	3 4		Y-G G-Y	7B 8B		
	Line 3	T R	5 6		Y-BR BR-Y	7C 8C		
	Line 4	T R	7 8		Y-S S-Y	7D 8D		
	Line 5	T R	9 10		V-BL BL-V		7 8	1st
	Line 6	T R	11 12		V-O O-V		7 8	2nd
	Line 7	T R	13 14		V-G G-V		7 8	3rd
Spare			15 16		V-BR BR-V			
			17 18		V-S S-V			
Vacant			19 20					
			21 22					
			23 24					
			25 26					
			27 28					
			29 30					
			31 32					
			33 34					
			35 36					
See Table E For Power Connections			37 38	See Table E For Power Connections				
			39 40					
			41 42					
			43 44					
			45 46					
			47 48					
			49 50					

TABLE E

311-TYPE KSU (4-7 LINES) CONNECTIONS BETWEEN APPARATUS, 66-TYPE CONNECTING BLOCK, AND POWER PLANT

FEATURE	LEAD DESIG	CONNECTING BLOCK D												
		ROW ON 66-TYPE CONN BLOCK	COL F			COL E			COL D			COL A		
			CABLE COLOR BR-W BNDR	TO		CABLE COLOR BR-W BNDR	TO		CABLE COLOR BR-W BNDR	TO		CABLE COLOR	TO	
				KTU	TERMINAL		KTU	TERMINAL		KTU	TERMINAL		J86731-D POWER PLANT	
Audible Signal Power Supply	GRD	37	W-BL	232B	39									
	±, BAT., or 105V ±	38	BL-W		29									
20v dc Talk or A Bat.	GRD	39	W-O	232B	25							G-2Y	20V DC Talk	G
	BAT.	40	O-W		24							G-1Y		B
20v dc Signal or B Bat.	GRD	41	R-BR	1st 202D	4							BL-2Y	20V DC Signal	G
	GRD	42	W-Y*	230B 1st	4A							S-2BK		
	BAT.	43	BR-R	202D	26							BL-1Y		B
	BAT.	44	Y*	230B	26A							S-1BK		
Lamp and Motor Supply	GRD	45	W-BL*	1st 202D	6							R-Y†	10V AC	G
	GRD‡	46	W-O*	230B	6A	R-G	232B	27	W-G*	207C	32R	R-W†		
	10V AC‡	47	W-BR†	232B	9	G-R	232B	26				W†		
	± or BAT.	48	BR†	232B	10		1st					W†		
	± or BAT.	49	W-S†	232B	19	BL*	202D	29				R†		±
	± or BAT.	50	S†	232B	20	O*	230B	29A	G*	207C	29B	R†		

* 20 Gauge Wire.

† 18 Gauge Wire.

‡ Motor supply must be 10 volt ac. When direct current is used for lamps move W-O from terminal 46, clip 6 to terminal 45, clip 5 and W-BR from terminal 47, clip 6 to terminal 48, clip 5.

TABLE F

311-TYPE KSU (9-13 LINES) CONNECTIONS BETWEEN APPARATUS AND 66-TYPE CONNECTING BLOCKS

FEATURE	LEAD DESIGNATION	BLOCK D 66-TYPE CONNECTING BLOCK			TERMINAL ON 238A KTU
		ROW	COL	CABLE COLOR BLUE BINDER	
Line 1	T	1	F	W-BL	1A
	R	2		BL-W	2A
	A	3		W-O	3A
	A1	4		O-W	4A
	LG	5		W-G	6A
	L	6		G-W	5A
Line 2	T	7		W-BR	31A
	R	8		BR-W	32A
	A	9		W-S	33A
	A1	10		S-W	34A
	LG	11		R-BL	36A
	L	12		BL-R	35A
Line 3	T	13		R-O	1B
	R	14		O-R	2B
	A	15		R-G	3B
	A1	16		G-R	4B
	LG	17		R-BR	6B
	L	18		BR-R	5B
Line 4	T	19		R-S	31B
	R	20		S-R	32B
	A	21		BK-BL	33B
	A1	22		BL-BK	34B
	LG	23		BK-O	36B
	L	24		O-BK	35B
Line 5	T	25		BK-G	1C
	R	26		G-BK	2C
	A	27		BK-BR	3C
	A1	28		BR-BK	4C
	LG	29		BK-S	6C
	L	30		S-BK	5C
Line 6	T	31		Y-BL	31C
	R	32		BL-Y	32C
	A	33		Y-O	33C
	A1	34		O-Y	34C
	LG	35		Y-G	36C
	L	36		G-Y	35C
Line 7	T	37		Y-BR	1D
	R	38		BR-Y	2D
	A	39		Y-S	3D
	A1	40		S-Y	4D
	LG	41		V-BL	6D
	L	42		BL-V	5D
Line 8	T	43		V-O	31D
	R	44		O-V	32D
	A	45		V-G	33D
	A1	46		G-V	34D
	LG	47		V-BR	36D
	L	48		BR-V	35D
Spare		49		V-S	
		50		S-V	

TABLE F (Cont)

311-TYPE KSU (9-13 LINES) CONNECTIONS BETWEEN APPARATUS AND 66-TYPE CONNECTING BLOCKS

FEATURE		LEAD DESIGNATION	BLOCK B 66-TYPE CONNECTING BLOCK			TERMINAL ON 238A KTU	TERMINAL ON 230B KTU	TERMINAL ON 207C KTU	TERMINAL ON 216A KTU
			ROW	COL	CABLE COLOR ORANGE BINDER				
Line 9		T R	1 2	F	W-BL BL-W	1E 2E			
		A A1	3 4		W-O O-W	3E 4E			
		LG L	5 6		W-G G-W	6E 5E			
Line 10		T R	7 8		W-BR BR-W		1A 2A		
		A A1	9 10		W-S S-W		3A 4A		
		LG L	11 12		R-BL BL-R		6A 5A		
Line 11		T R	13 14		R-O O-R		1B 2B		
		A A1	15 16		R-G G-R		3B 4B		
		LG L	17 18		R-BR BR-R		6B 5B		
Line 12		T R	19 20		R-S S-R		1C 2C		
		A A1	21 22		BK-BL BL-BK		3C 4C		
		LG L	23 24		BK-O O-BK		6C 5C		
Line 13		T R	25 26		BK-G G-BK		1D 2D		
		A A1	27 28		BK-BR BR-BK		3D 4D		
		LG L	29 30		BK-S S-BK		6D 5D		
Dial Intercom		T R	31 32		Y-BL BL-Y			1B 2B	
		LG L	33 34		Y-O O-Y			32B 3B	
Aud Sig Assoc with Dial Intercom	Code 3	B R	35 36		Y-G G-Y			36B	13
	4	B R	37 38		Y-BR BR-Y			36B	14
	5	B R	39 40		Y-S S-Y			37B	15
	6	B R	41 42		V-BL BL-V			37B	16
	7	B R	43 44		V-O O-V			38B	17
	8	B R	45 46		V-G G-V			38B	18
	9	B R	47 48		V-BR BR-V			40B	19
	0	B R	49 50		V-S S-V			40B	20

TABLE F (Cont)

311-TYPE KSU (9-13 LINES) CONNECTIONS BETWEEN APPARATUS AND 66-TYPE CONNECTING BLOCKS

FEATURE		LEAD DESIGNATION	BLOCK C 66-TYPE CONNECTING BLOCK			TERMINAL ON 238A KTU	TERMINAL ON 230B KTU	TERMINAL ON 207C KTU	TERMINAL ON 216A KTU
			ROW	COL	CABLE COLOR GREEN BINDER				
Aud Sig Assoc with Dial Intercom	Code 21	B R	1 2	F	W-BL BL-W			31B	21
	22	B R	3 4		W-O O-W			4B	22
	23	B R	5 6		W-G G-W			4B	23
	24	B R	7 8		W-BR BR-W			14B	24
	25	B R	9 10		W-S S-W			14B	25
	26	B R	11 12		R-BL BL-R			24B	26
	27	B R	13 14		R-O O-R			24B	27
	28	B R	15 16		R-G G-R			30B	28
	29	B R	17 18		R-BR BR-R			30B	29
	20	B R	19 20		R-S S-R			24B	30
Aud Sig Assoc with Line Ckts	Line 1	B1 or BZ1 R1 or BZ	21 22		BK-BL BL-BK	18A 19A			
	Line 2	B1 or BZ1 R1 or BZ	23 24		BK-O O-BK	38A 39A			
	Line 3	B1 or BZ1 R1 or BZ	25 26		BK-G G-BK	18B 19B			
	Line 4	B1 or BZ1 R1 or BZ	27 28		BK-BR BR-BK	38B 39B			
	Line 5	B1 or BZ1 R1 or BZ	29 30		BK-S S-BK	18C 19C			
	Line 6	B1 or BZ1 R1 or BZ	31 32		Y-BL BL-Y	38C 39C			
	Line 7	B1 or BZ1 R1 or BZ	33 34		Y-O O-Y	18D 19D			
	Line 8	B1 or BZ1 R1 or BZ	35 36		Y-G G-Y	38D 39D			
	Line 9	B1 or BZ1 R1 or BZ	37 38		Y-BR BR-Y	18E 19E			
	Line 10	B1 or BZ1 R1 or BZ	39 40		Y-S S-Y		25A 10A		
	Line 11	B1 or BZ1 R1 or BZ	41 42		V-BL BL-V		27A 10B		
	Line 12	B1 or BZ1 R1 or BZ	43 44		V-O O-V		27A 10C		
	Line 13	B1 or BZ1 R1 or BZ	45 46		V-G G-V		30A 10D		
Spare			47 48		V-BR BR-V				
			49 50		V-S S-V				

TABLE F (Cont)

311-TYPE KSU (9-13 LINES) CONNECTIONS BETWEEN APPARATUS AND 66-TYPE CONNECTING BLOCKS

FEATURE		LEAD DESIGNATION	BLOCK D 66-TYPE CONNECTING BLOCK ROW	COL	CABLE COLOR BROWN BINDER	TERMINAL ON 238A KTU	TERMINAL ON 230B KTU
CO or PBX Lines	Line 1	T R	1 2		W-BL BL-W	7A 8A	
	Line 2	T R	3 4		W-O O-W	27A 28A	
	Line 3	T R	5 6		W-G G-W	7B 8B	
	Line 4	T R	7 8		W-BR BR-W	27B 28B	
	Line 5	T R	9 10		W-S S-W	7C 8C	
	Line 6	T R	11 12		R-BL BL-R	27C 28C	
	Line 7	T R	13 14		R-O O-R	7D 8D	
	Line 8	T R	15 16		R-G G-R	27D 28D	
	Line 9	T R	17 18	F	R-BR BR-R	7E 8E	
	Line 10	T R	19 20		R-S S-R		7A 8A
	Line 11	T R	21 22		BK-BL BL-BK		7B 8B
	Line 12	T R	23 24		BK-O O-BK		7C 8C
	Line 13	T R	25 26		BK-G G-BK		7D 8D
Spare			27 28		BK-BR BR-BK		
			29 30		BK-S S-BK		
			31 32		Y-BL BL-Y		
			33 34		Y-O O-Y		
			35 36		Y-G G-Y		
See Table G for Power Connections			37 38 39 40 41 42 43 44 45 46 47 48 49 50		See Table G for Power Connections		

TABLE G

311-TYPE KSU (9-13 LINES) CONNECTIONS BETWEEN APPARATUS, 66-TYPE CONNECTING BLOCK, AND POWER PLANT

FEATURE	LEAD DESIG	CONNECTING BLOCK D												
		ROW ON 66-TYPE CONN BLOCK	COL F			COL E			COL D			COL A		
			CABLE COLOR	TO		CABLE COLOR	TO		CABLE COLOR	TO		CABLE COLOR	TO	
				KTU	TERMINAL		KTU	TERMINAL		KTU	TERMINAL		J86731-D POWER PLANT	
Audible Signal Power Supply	GRD ±, BAT., or 105V ±	37 38	V-BR BR-V	238A	29F 30F									
20v dc Talk or A Bat.	GRD BAT.	39 40	V-S S-V	207C 238A	10B 10G							G-2Y G-1Y	20V DC Talk	G B
20v dc Signal or B Bat.	GRD	41	W-BL*	238A	9A	W-O*	238A	9C				O-S*	20V DC Signal	G
	GRD	42	W-G*	238A	9E	W-Y*	230B	4A				R-G*		
	BAT.	43	BL*	238A	10A	O*	238A	10C				O-BL*		
	BAT.	44	G*	238A	10E	Y*	230B	25A				R-BR*		B
Lamp and Motor Supply	GRD	45	BK-G*	238A	29A	Y-G*	238A	29E				R-Y†	10V AC	G
	GRD‡	46	BR-G*	238A	29C	Y-O*	230B	6A	V-G	238A	39F	R-W†		
	10V AC‡	47	W-BR†	238A	9G	BK-W*	238A	30A	G-V	238A	40F	W†		±
	± or BAT.	48	BR†	238A	19G	BR-Y*	238A	30C						
	± or BAT.	49	W-S†	238A	29G	Y-BL*	238A	30E				R†		
	± or BAT.	50	S†	238A	39G	Y-S*	230B	29A						

* 20-Gauge Wire.

† 18-Gauge Wire.

‡ Motor supply must be 10 volt ac. When direct current is used for lamps move the following lead:

LEAD COLOR	FROM	TO
BR-G	Term. 46, Clip 6	Term. 45, Clip 4
Y-O	Term. 46, Clip 5	Term. 45, Clip 3
W-BK	Term. 47, Clip 6	Term. 48, Clip 4
BK-W	Term. 47, Clip 5	Term. 49, Clip 4

TABLE H

310- OR 311-TYPE KSU (9 TO 13 LINES)
LINE CIRCUIT PORTION OF 238A KTU

REF DESIG	TERMINAL ON 238A KTU									LEAD DESIG	
	CKT 1	CKT 2	CKT 3	CKT 4	CKT 5	CKT 6	CKT 7	CKT 8	CKT 9		
A	7A	27A	7B	27B	7C	27C	7D	27D	7E	T	CO or PBX Line
B	8A	28A	8B	28B	8C	28C	8D	28D	8E	R	
C	17A	37A	17B	37B	17C	37C	17D	37D	17E	Line Ringing	
D	21E	22E	23E	24E	25E	31E	32E	33E	34E	H	
E	1A 11A	21A 31A	1B 11B	21B 31B	1C 11C	21C 31C	1D 11D	21D 31D	1E 11E	T	Station
F	2A 12A	22A 32A	2B 12B	22B 32B	2C 12C	22C 32C	2D 12D	22D 32D	2E 12E	R	
G	5A 15A	25A 35A	5B 15B	25B 35B	5C 15C	25C 35C	5D 15D	25D 35D	5E 15E	L	
H	3A 13A	23A 33A	3B 13B	23B 33B	3C 13C	23C 33C	3D 13D	23D 33D	3E 13E	A	
J	20A	40A	20B	40B	20C	40C	20D	40D	20E	Audible Signal	
K	18A	38A	18B	38B	18C	38C	18D	38D	18E		
L	19A	39A	19B	39B	19C	39C	19D	39D	19E		
M	6F		7F		8F		9F		10F	Lamp Wink	
N	36E		37E		38E		39E		40E	Lamp Flash	
P	9A		9B		9C		9D		9E	Grd	Relay Power Supply
Y	10A		10B		10C		10D		10E	Bat.	
Q	4A 14A	24A 34A	4B 14B	24B 34B	4C 14C	24C 34C	4D 14D	24D 34D	4E 14E	A1	Station
R	6A 16A	26A 36A	6B 16B	26B 36B	6C 16C	26C 36C	6D 16D	26D 36D	6E 16E	LG	
S	29A		29B		29C		29D		29E	Grd	Lamp Power Supply
T	30A, 16F		30B, 17F		30C, 18F		30D, 19F		30E, 20F	± or LB	
U	1G				11G				21G	HA	Time-out
V	2G				12G				22G	TO	
W	3G				13G				23G	CO	
X	4G				14G				24G	LK	

o——o Indicates Factory Strapping.

TABLE I

310- OR 311-TYPE KSU (9 TO 13 LINES)
230B KTU

REF DESIG	TERMINAL ON 230B KTU				LEAD DESIG	
	CKT 1 (10)*	CKT 2 (11)*	CKT 3 (12)*	CKT 4 (13)*		
A	7A	7B	7C	7D	T	CO or PBX Line
B	8A	8B	8C	8D	R	
C	17A	17B	17C	17D	Line Ringing	
D	18A	18B	18C	18D	H	
E	1A 11A	1B 11B	1C 11C	1D 11D	T	Station
F	2A 12A	2B 12B	2C 12C	2D 12D	R	
G	5A 15A	5B 15B	5C 15C	5D 15D	L	
H	3A 13A	3B 13B	3C 13C	3D 13D	A	
J	9A	9B	9C	9D	Audible Signal	
L	10A	10B	10C	10D		
M	20A	20B	20C	20D	Lamp Wink	
N	19A	19B	19C	19D	Lamp Flash	
Q	4A	4B	4C	4D	A1	Station
R	6A	6B	6C	6D	LG	
T	29A		28A		± or Bat.	Lamp Pwr Supply

* Number in parenthesis denotes circuit in package.

o o Indicates Factory Strapping.

TABLE J

2301-TYPE KSU CONNECTIONS BETWEEN APPARATUS AND 66-TYPE CONNECTING BLOCKS

FEATURE	LEAD DESIG	BLOCK A 66B1-25 CONNECTING BLOCK			TERMINAL ON 232A OR B KTU*	TERMINAL ON KTU		TERMINAL ON 202C OR D KTU		TERMINAL ON 207C KTU
		ROW	COL	CABLE COLOR BLUE BINDER		230A	230B†			
Line 1	T R	1 2		W-BL BL-W		1A 2A				
	A A1	3 4		W-O O-W		3A 4A				
	LG L	5 6		W-G G-W		6A 5A				
Line 2	T R	7 8		W-BR BR-W		1B 2B				
	A A1	9 10		W-S S-W		3B 4B				
	LG L	11 12		R-BL BL-R		6B 5B				
Line 3	T R	13 14		R-O O-R		1C 2C				
	A A1	15 16		R-G G-R		3C 4C				
	LG L	17 18		R-BR BR-R		6C 5C				
Line 4	T R	19 20		R-S S-R		1D 2D				
	A A1	21 22		BK-BL BL-BK		3D 4D				
	LG L	23 24		BK-O O-BK		6D 5D				
Line 5	T R	25 26	F	BK-G G-BK				1 2	1st	
	A A1	27 28		BK-BR BR-BK				3 4		
	LG L	29 30		BK-S S-BK				6 5		
Line 6	T R	31 32		Y-BL BL-Y				1 2	2nd	
	A A1	33 34		Y-O O-Y				3 4		
	LG L	35 36		Y-G G-Y				6 5		
Motor Supply	GRD 10v ±	37 38		Y-BR BR-Y	27 26					
Spare		39 40		Y-S S-Y						
Lamp Supply	± or BAT. ± or BAT.	41‡ 42‡		V-BL BL-V	9 10					
	GRD ± or BAT.	43 44‡		V-O O-V		30A 29A	6A 29A			
Audible Signal Supply	GRD BAT., ±, or 105V ±	45 46		V-G G-V	29	25A	30A			
20v dc Talk or A Bat.	GRD BAT.	47 48		V-BR BR-V	25 24					
20v dc Sig or B Bat.	GRD BAT.	49 50		V-S S-V		26A 27A	26A 4A			

* 232B KTU is arranged internally to disable time-out feature when BF relay is operated.

† 230B KTU is arranged for individual fusing of circuits 1-2 and 3-4 lamp input power.

‡ With 1 to 72 lamps, strap terminals 41, 42, and 44; with 73 to 144 lamps, strap terminals 42 and 44 and run separate power lead to 41.

(TABLE J (Cont)

2301-TYPE KSU CONNECTIONS BETWEEN APPARATUS AND 66-TYPE CONNECTING BLOCKS

FEATURE		LEAD DESIG	BLOCK A 66B1-25 CONNECTING BLOCK ROW	COL	CABLE COLOR ORANGE BINDER	TERMINAL ON 232A OR B KTU*	TERMINAL ON KTU 230A	230B†	TERMINAL ON 202C OR D KTU		TERMINAL ON 207C KTU
Manual Intercom Line		T R	1 2		W-BL BL-W	30 40					
		LG L	3 4		W-O O-W	* 28					
Audible Signal	Line 1	B1 or BZ1 R1 or BZ	5 6		W-G G-W		25A 10A	30A 10A			
	Line 2	B1 or BZ1 R1 or BZ	7 8		W-BR BR-W		25A 10B				
	Line 3	B1 or BZ1 R1 or BZ	9 10		W-S S-W		28A 10C	30A 10C			
	Line 4	B1 or BZ1 R1 or BZ	11 12		R-BL BL-R		28A 10D	25A 10D			
	Line 5	B1 or BZ1 R1 or BZ	13 14		R-O O-R				25 10	1st	
	Line 6	B1 or BZ1 R1 or BZ	15 16		R-G G-R				25 10	2nd	
Dial Selective Intercom Line		T R	17 18		R-BR BR-R						1B 2B
		LG L	19 20		R-S S-R						32B 3B
		B(2) R(2)	21 22		BK-BL BL-BK						36B 12A
		B(3) R(3)	23 24		BK-O O-BK						36B 13A
		B(4) R(4)	25 26	F	BK-G G-BK						37B 14A
		B(5) R(5)	27 28		BK-BR BR-BK						37B 15A
		B(6) R(6)	29 30		BK-S S-BK						38B 16A
		B(7) R(7)	31 32		Y-BL BL-Y						38B 17A
		B(8) R(8)	33 34		Y-O O-Y						40B 18A
		B(9) R(9)	35 36		Y-G G-Y						40B 19A
		B(0) R(0)	37 38		Y-BR BR-Y						31B 20A
CO or PBX	Line 1		39 40		Y-S S-Y		7A 8A				
	Line 2		41 42		V-BL BL-V		7B 8B				
	Line 3		43 44		V-O O-V		7C 8C				
	Line 4		45 46		V-G G-V		7D 8D				
	Line 5		47 48		V-BR BR-V				7 8	1st	
	Line 6		49 50		V-S S-V				7 8	2nd	

* Connect to convenient lamp ground.

TABLE K

2311-TYPE KSU — CONNECTIONS

FEATURE	LEAD DESIG	BLOCK A 66B1-25 CONNECTING BLOCK			TERMINAL ON 232A OR B KTU*	TERMINAL ON 230A OR B KTU†	TERMINAL ON 202C OR D KTU		TERMINAL ON 207C KTU
		ROW	COL	CABLE COLOR BLUE BINDER					
Line 1	T	1		W-BL		1A			
	R	2		BL-W		2A			
	A	3		W-O		3A			
	A1	4		O-W		4A			
	LG	5		W-G		6A			
	L	6		G-W		5A			
Line 2	T	7		W-BR		1B			
	R	8		BR-W		2B			
	A	9		W-S		3B			
	A1	10		S-W		4B			
	LG	11		R-BL		6B			
	L	12		BL-R		5B			
Line 3	T	13		R-O		1C			
	R	14		O-R		2C			
	A	15		R-G		3C			
	A1	16		G-R		4C			
	LG	17		R-BR		6C			
	L	18		BR-R		5C			
Line 4	T	19		R-S		1D			
	R	20		S-R		2D			
	A	21		BK-BL		3D			
	A1	22		BL-BK		4D			
	LG	23		BK-O		6D			
	L	24		O-BK		5D			
Line 5	T	25	F	BK-G			1		
	R	26		G-BK			2		
	A	27		BK-BR			3	1st	
	A1	28		BR-BK			4		
	LG	29		BK-S			6		
	L	30		S-BK			5		
Line 6	T	31		Y-BL			1		
	R	32		BL-Y			2		
	A	33		Y-O			3	2nd	
	A1	34		O-Y			4		
	LG	35		Y-G			6		
	L	36		G-Y			5		
Line 7	T	37		Y-BR			1		
	R	38		BR-Y			2		
	A	39		Y-S			3	3rd	
	A1	40		S-Y			4		
	LG	41		V-BL			6		
	L	42		BL-V			5		
Manual Intercom Line	T	43		V-O	30				
	R	44		O-V	40				
	LG	45		V-G	27				
	L	46		G-V	28				
Dial Selective Intercom Line	T	47		V-BR					1B
	R	48		BR-V					2B
	LG	49		V-S					32B
	L	50		S-V					3B

* 232B KTU is arranged internally to disable time-out feature when BF relay is operated.

† 230B KTU is arranged for individual fusing of circuits 1-2 and 3-4 lamp input power.

TABLE K (Cont)

2311-TYPE KSU — CONNECTIONS

FEATURE		LEAD DESIG	BLOCK B 66B1-25 CONNECTING BLOCK ROW	COL	CABLE COLOR ORANGE BINDER	TERMINAL ON 232A OR B KTU	TERMINAL ON KTU 230A	230B	TERMINAL ON 202C OR D KTU		TERMINAL ON 207 KTU
Audible Signal Associated With Dial Selective Intercom Line		B(2) R(2)	1 2	F	W-BL BL-W						36B 12A
		B(3) R(3)	3 4		W-O O-W						36B 13A
		B(4) R(4)	5 6		W-G G-W						37B 14A
		B(5) R(5)	7 8		W-BR BR-W						37B 15A
		B(6) R(6)	9 10		W-S S-W						38B 16A
		B(7) R(7)	11 12		R-BL BL-R						38B 17A
		B(8) R(8)	13 14		R-O O-R						40B 18A
		B(9) R(9)	15 16		R-G G-R						40B 19A
		B(0) R(0)	17 18		R-BR BR-R						31B 20A
Aud Sig Assoc with Line Ckts	Line 1	B1 or BZ1 R1 or BZ	19 20		R-S S-R		25A 10A	30A 10A			
	Line 2	B1 or BZ1 R1 or BZ	21 22		BK-BL BL-BK		25A 10B				
	Line 3	B1 or BZ1 R1 or BZ	23 24		BK-O O-BK		25A 10C				
	Line 4	B1 or BZ1 R1 or BZ	25 26		BK-G G-BK		28A 10D	30A 10D			
	Line 5	B1 or BZ1 R1 or BZ	27 28		BK-BR BR-BK				25 10	1st	
	Line 6	B1 or BZ1 R1 or BZ	29 30		BK-S S-BK				25 10	2nd	
	Line 7	B1 or BZ1 R1 or BZ	31 32		Y-BL BL-Y				25 10	3rd	
CO or PBX	Line 1	T R	33 34		Y-O O-Y		7A 8A				
	Line 2	T R	35 36		Y-G G-Y		7B 8B				
	Line 3	T R	37 38		Y-BR BR-Y		7C 8C				
	Line 4	T R	39 40		Y-S S-Y		7D 8D				
	Line 5	T R	41 42		V-BL BL-V				7 8	1st	
	Line 6	T R	43 44		V-O O-V				7 8	2nd	
	Line 7	T R	45 46		V-G G-V				7 8	3rd	
Ringing Supply*		GRD 105V ±	47 48		V-BR BR-V	29	28A	30A			
Local Ground		GRD GRD	49 50		V-S† S-V†						

* Do not mount ringing supply (frequency-generator) in cabinet with equipment, due to noise difficulties.

† Connect to ground terminal on J86731D, List 1 power plant.

REFERENCE

1A2 KEY TELEPHONE SYSTEM

IDENTIFICATION AND ARRANGEMENTS

CONTENTS PAGE

1. GENERAL 1
2. IDENTIFICATION 3
FEATURES 4
A. Pickup and Hold 4
B. Visual Signals 4
C. Audible Signals 5
D. Intercom 5
E. Private Lines 6
F. Add-On Conferencing 6
G. Multiline Conferencing 7
H. Exclusion 7
I. Station Restriction 7
J. Music-On-Hold 7
K. Speakerphone 7
L. Toll Restriction 8
M. Paging 8
N. COM KEY Features 8
STATION APPARATUS 8
MESSAGE WAITING (MW) CONSOLES . 8
A. 6B1 Selector Console 8

CONTENTS PAGE

B. 7B1 Selector Console 8
KEY TELEPHONE UNITS 8
MOUNTING FACILITIES 9
POWER SUPPLY 12
PROTECTION AND GROUNDING . . . 20
LIMITATIONS 20
3. ARRANGEMENTS 20

1. GENERAL

1.01 The 1A2 Key Telephone System (KTS) enables key stations to connect to any one of a number of central office (CO), PBX, private, or intercom lines by the operation of an associated pickup key. The capacity of any station is determined by the number of buttons available for pickup, switching, or signaling purposes.

1.02 This section is reissued to:

- Show the following key telephone units (KTUs) rated manufacture discontinued (MD) and their replacements

KTUs (MD)	REPLACEMENTS
400G	400H
401A	401B
415A	415B
454B	454C
460B	460C
471B	471C
479B	479C

NOTICE
Not for use or disclosure outside the
Bell System except under written agreement

Printed in U.S.A.

- Add information on the 630A key service panel (KSP) and 113A1 connecting unit (CU) to Table D
- Add information on 110A apparatus mounting to Table E
- Add information on the proper grounding and protection of KTS
- Add information on the line circuit limitations when using the 400D KTU with the 451B KTU and the 400H KTU with the 498A KTU and 116A1 circuit module (CM)
- Add information on COM KEY* features that are available for 1A2 KTS using the 452A, 454C, and 460C
- Add information on the 278A paging adapter
- Add information on multiline conferencing using polarity guard circuits mounted on the 2A1 matrix block
- Add information on the 6B KTS (DIALOG*)
- Add information on registration and registration interfaces
- Add information to Table B on KTUs introduced since the last issue: 444-type, 452A, 454-type, 460-type, 494A, and 498A KTUs.

1.03 The 1A2 KTS features 400-series KTUs which consist of miniature relays and solid state circuitry assembled on plug-in type printed wiring boards. Service features are similar to those of the 1A1 KTS. However, the line circuits of the 1A2 KTS are arranged for time-out of locked-in visual and audible signals on a ***per line basis*** rather than on a ***system basis.***

1.04 The 400-series KTUs are designed and manufactured to ensure reliable operation and good service with extended useful life. Improper or careless handling can result in damaged units. Exercise care when handling, storing, and shipping KTUs to avoid accidental damage to delicate components. These units are shipped in a reusable blister pack.



Always use the blister pack or other suitable container when transporting or storing the KTUs. Overpack when necessary.

1.05 A large or centralized installation of a 1A2 KTS should, where practical, make use of the connecting block arrangement described in Section 518-010-101.

1.06 ***Packaged 1A2 KTS:*** The COM KEY 718, 1434, and 2152 Systems, which combine 1A2 equipment with specially designed KTUs, key telephones and consoles, are not covered in this practice. ◗However, some of the COM KEY features are adaptable to the 1A2 KTS. These features are described in paragraph 2.34.◖ Refer to Sections 518-450-100, -102, -110, and -111 for information on these systems. ◗COM KEY 416, while similar in operation to 1A2 KTS, is a self-contained system not requiring KTUs or mountings. Refer to Section 518-450-106.◖

1.07 This issue of the section is based on the following drawings:

SD-69475, Issue 6—401A ◗(MD) and 401B KTUs◖

SD-69489, Issue 5—428A KTU

SD-69513, Issue 15—400B (MD), 400C (MD), and 400D (MD) KTUs

◗SD-69942, Issue 1—400H KTU◖

SD-69530, Issue 6—429A (MD), 429B ◗(MD), 429C,◖ and 430A KTUs

SD-69552, Issue 4—412A KTU

SD-69559, Issue 9—414A (A&M) Only, 415A ◗(MD), 415B,◖ 416A, 418A, 419A, 461A, and 469A KTUs

SD-69561, Issue 2—417A KTU

*Trademark of AT&TCo.

SD-69567, Issue 14—407B (MD), 407C, 420A, 422B, 423A, 423B (MD), 424A (MD), 424C, 476A, and ▶494A◀ KTUs

SD-69590, Issue 2—413A, 421A, 448A, and 449A KTUs

SD-69595, Issue 8—426A, 427B (MD), and 427C KTUs

SD-69651, Issue 1—400G KTU (MD)

SD-69906, Issue 2—440A KTU (MD)

▶SD-69653, Issue 2—444A and 444B KTUs

SD-69930, Issue 1—454B (MD) and 454C KTUs

SD-69652, Issue 3—452A, 460B (MD), and 460C KTUs◀

SD-69917, Issue 1—467A KTU

SD-69921, Issue 1—▶471A (MD), 471B (MD), 471C, 479A (MD), 479B (MD), and 479C KTUs◀

SD-69922, Issue 1—451B ▶and 498A◀ KTUs

SD-69931, Issue 2—478B KTU.

If this section is to be used with equipment or apparatus reflecting later issues of the drawings, reference should be made to the CDs and SDs to determine the extent of the changes and the manner in which the section may be affected.

1.08 For detailed information on specified KTS equipment and apparatus, refer to the following sections:

518-215-400—Line Service KTUs

518-215-401—Auxiliary Service KTUs

518-215-402—Intercom Service KTUs

518-215-403—Control Service KTUs

518-215-404—501-, 502-Type KSUs

518-215-405—513-, 514-, 515-Type KSUs

518-215-407—550-, 551-Type KSUs

518-215-410—583-, 584-Type Panels

518-215-417—597-, 598-Type Panels

518-215-418—601-, 602-, 603-Type Panels

518-215-419—620A, ▶620A2,◀ 641A, and 642A Modular Panels

518-215-420—69-Type Apparatus Mountings

518-215-421—626A Modular Panel

▶518-215-422—110A Apparatus Mounting

518-215-424—630A KSP and 113A1 CU

518-411-100—6B KTS, DIALOG Intercom System◀

1.09 ▶After January 1, 1980, connection of customer-provided equipment (CPE) or telephone company-provided equipment to the 1A2 KTS requires the use of a 33B voice coupler when providing music-on-hold. Also after January 1, 1980, the 401B, 415B, 471C, and 479C KTUs must be used when providing their related services. Previously connected or Class C voice couplers and KTUs may be used for maintenance at grandfathered installations for the life of the equipment, provided they are not modified. Class C stock can be used in new installations after January 1, 1980.

1.10 Incoming CO lines to be installed in compliance with the Federal Communications Commission's (FCC) Registeration Program must be routed through a standard network interface. Information on approved interfaces is contained in Sections 463-400-100 through 463-400-150.◀

2. IDENTIFICATION

2.01 A 1A2 KTS consists of the following:

(a) Key telephone sets and/or nonkey telephone sets (with or without separately mounted keys) capable of A-lead control

(b) The 400-series KTUs providing switching and control features

(c) The key service units (KSUs) panels and apparatus mountings, featuring prewired connectors that provide the mounting and connecting facilities for the 400-series KTUs

(d) Local power supply for talking, audible signal, lamp and relay operation

(e) Miscellaneous components as required: cabling, distribution terminals, adapters, fasteners, and supplemental apparatus cabinets or relay racks.

FEATURES

2.02 The 1A2 KTS provides the following features:

- Pickup and hold on CO/PBX lines
- Visual signals
- Audible signals
- Intercom—rotary or TOUCH-TONE® dialing with optional hands-free answer on intercom (HFAI)
- Voice signaling on manual intercom
- Private lines
- Add-on conferencing
- ▶Multiline conferencing◀
- Exclusion
- Station restriction
- Music-on-hold
- Speakerphone
- Toll restriction (battery reversal or rotary dial)
- 6B1 and 7B1 message waiting (MW) consoles
- ▶Paging
- COM KEY features.◀

A. Pickup and Hold

2.03 Pickup of more than one line at a station is the basic feature of a KTS. Any line appearing at a station can be selected by operating the button assigned to that line.

2.04 The hold feature permits a station to hold a line while using another line. Depressing the hold key connects a resistive holding bridge across the line and releases the station user from that line.

Supplementary Hold

2.05 In addition to normal hold, as explained in paragraph 2.04, the system may be equipped for supplementary hold which provides a special lamp flutter indication. Supplementary hold is provided by two methods:

- ***Priority hold*** in which all appearances of a line receive the flutter indication
- ***I hold*** in which the flutter indication is received only at the station initiating the hold.

2.06 ***Priority hold*** serves to alert personnel an incoming call has been answered (acknowledged only), placed on hold, and should be completed as soon as the first available attendant is able to do so. The ***I hold*** enables a station having access to a number of lines to readily determine which lines have been placed on hold by that station.

B. Visual Signals

2.07 Visual signals may be provided by lamps associated with pickup keys of key telephone sets or separately mounted keys, or by separately mounted lamp indicators.

2.08 The 1A2 KTS provides the following visual line signals at stations:

- Steady lamp for line busy
- Flashing lamp for an incoming call
- Steady or winking lamp for normal hold
- Flutter lamp for "priority hold" or "I hold."

2.09 ***Station Busy Lamp:*** This feature is a function of the switchhook in the telephone set. When the handset is off-hook at a station so equipped, a visual signal is received at a subordinate station or stations. This signal alerts the subordinate station(s) that the master station is off-hook and all incoming calls for the master station should be intercepted.

2.10 ***Fuse and Line Status Indicators: Indicator-type fuses give a visual indication of fuse status in the KSU. A line status lamp located in the KSU ▶or on some line circuits◀ is dedicated to each CO/PBX and intercom line and shows the status of the associated line. This latter feature is available only with 600-series modular panels ▶and the 400G (MD) and 400H KTUs.◀***

C. Audible Signals

2.11 Three types of audible signals are available with the basic 1A2 KTS: ringers, bells, and/or buzzers. They may be arranged for steady or interrupted operation. Ringers and buzzers can be located in the telephone set or external to it; bells are mounted externally. A station may be equipped with more than one audible signal, depending on services and features required. ▶COM KEY uses tone signaling.◀

2.12 ***Common Audible Signaling:*** This feature provides for the use of one signaling device for indicating incoming calls on any of several lines. In a typical installation, one station may be designated as the attendant position, which will be equipped with common audible signaling; all incoming calls will ring the attendant position and be answered there. Common audible signaling is flexible and can be arranged in various combinations of lines to ringers by the use of diode matrices. Section 518-010-108 contains a detailed description of common audible signaling.

2.13 ***Audible Signal Suppression:*** This feature provides a circuit arrangement to suppress audible alerting signals on a line or lines associated with a multibutton telephone set when that station is in an off-hook condition. Section 518-215-403 provides a detailed description of audible signal suppression.

2.14 ***Multistation CO Line Ringing:*** The CO ringing on a given line may be provided at more than one station in a 1A2 KTS. In addition to the common audible ringing at the attendant station, other stations can be wired to ring on incoming CO calls. This feature is extremely flexible and can be arranged to fit the customer's specific needs.

2.15 ***Ringing Control:*** Audible signals may also be controlled by delayed or immediate transfer control circuits. The delayed transfer control circuit allows an audible signal to sound for a predetermined interval, then transfers it to an attendant station when the control circuit times out. The immediate transfer circuit is controlled by a key ▶or a KTU◀. When the key is operated, ringing is automatically transferred to an attendant station.

2.16 ***Power Failure Transfer:*** When local commercial power supplying the KTS fails, local ringing on CO lines cannot continue. The power failure transfer feature automatically substitutes an external signaling device, operated by CO line ringing current, for the audible signal on a selected line. This allows incoming calls to be recognized and answered while commercial power is down. External ringers are installed on a per-line basis.

D. Intercom

2.17 An intercom line circuit allows two or more stations, usually located on the same premises, to converse with each other over a common talking path, without the use of a CO/PBX line. The HFAI can be furnished on manual or dial intercoms using adjuncts. This feature allows the called party to answer an intercom call without going off-hook. See Section 518-010-115 for detailed information.

2.18 Two types of intercom lines are available:

(a) ***Manual:*** Where all stations (on pickup) are connected to a common talking path. Station selection is done manually by the use of pushbuttons and buzzers. A visual signal can be provided at each station to indicate a busy condition. Voice signaling on manual intercom can be provided by using a 107B loudspeaker set. See Section 518-010-109 for detailed information.

(b) ***Dial:*** Where a station (on pickup) is connected to a common talking path which is part of a 10- or 19-code selector circuit. Station selection is accomplished by dialing one or two digits. The selector provides rotary dial station selection, a steady visual signal at all stations to indicate the selector is busy, single-spurt ringing, and control circuits for additional features as detailed in paragraph 2.19. ⧫Dial intercom services for 1A2 KTS can also be provided with 2- and 3-path intercom arrangements. These arrangements, which include COM KEY systems, have a button associated to each path, where as other systems, such as the 6B DIALOG, have one button assigned to four simultaneous intercom paths.⧫

2.19 The following optional features can be added to the basic dial selector circuit:

- TOUCH-TONE calling
- Flashing lamps at called station
- Interrupted ringing instead of adjustable single spurt
- Direct station selection or signaling via a pushbutton instead of dialing
- Long line circuit
- Add-on conferencing
- Preset conferencing via a dial code or pushbutton signaling
- Dial tone
- Audible ringback tone
- Station busy tone
- HFAI
- ⧫2- and 3-path intercom arrangements.⧫

E. Private Lines

2.20 Private lines provide direct communication between two points without the need of a CO/PBX line. With one or two exceptions, KTS private lines require similar or equivalent private line apparatus at both ends.

2.21 A number of private lines are available for the 1A2 KTS. The lines differ only in the type of terminating apparatus used and the means of signaling from one end to the other. Private lines available are:

(a) Arranged for 2-way manual signaling by use of ringdown private line circuits at each end.

(b) Arranged for signaling automatically from either end when the handset is lifted by the use of automatic dc signaling private line circuits at each end.

(c) Arranged to provide manual signaling in one direction and automatic signaling in the other by use of a manual signaling, ringdown line circuit at one location and an automatic signaling, ringdown private circuit at the other.

(d) A line, usually between two telephone sets located on the same premises, provided by the use of a station line circuit or a short range, private line circuit. The station line circuit is arranged for manual signaling in one direction and automatic signaling in the other. Simple strapping changes to the short range private line circuit can provide automatic signaling in both directions, 1-way automatic signaling, 1-way manual signaling, or manual signaling in both directions. These lines differ from those described in (a), (b), and (c) in that both ends of the private line terminate at the same KTU.

> ***Note:*** Manual signaling is done by the use of pushbuttons. Pickup keys of some key telephone sets can be modified for use as pushbuttons, or externally mounted keys can be used. An example of the latter is a 551A key mounted on a 77A bracket.

F. Add-On Conferencing

2.22 Add-on conferencing enables a station to bridge two lines for a 3-way conference without the assistance of an operator. An exclusion or nonlocking key is required to control the conference circuit. A visual signal may also be provided to indicate the conference circuit is in operation.

2.23 Three different conference arrangements can be provided:

(1) A CO line and a PBX line

(2) Two CO lines or two PBX lines

(3) A CO/PBX line and an intercom line.

G. ◗Multiline Conferencing

2.24 Multiline conferencing is established by simultaneously operating the pickup buttons on key telephone sets associated with the CO/PBX lines that are to be conferenced. Each CO/PBX line that can be conferenced must be provided with a polarity guard. The 2A1 matrix block (Section 518-010-110) is provided for this purpose.



The 401-type, 407-type, 424-type, and 494A KTUs must not be used for multiline conferencing to CO/PBX lines using simultaneous depression of pickup buttons. This can cause damage to KTUs and violates the FCC registration requirements.◖

H. Exclusion

2.25 A control station can exclude any subordinate station from the line when privacy is desired. Two types of exclusion are available with the 1A2 KTS: that which is a function of some telephone sets, and that which requires a KTU.

2.26 Single-line exclusion is provided by the exclusion key which is part of the switchhook assembly of some telephone sets. By manually pulling up the plunger, subordinate stations are excluded from the line and are automatically reconnected to the line by restoring the plunger or placing the handset on-hook.

2.27 Multiline exclusion permits a control station to exclude subordinate stations from more than one line appearing at that station. One control key can provide control for as many exclusion circuits as are required at a control station. By manually operating the control key, subordinate stations are automatically excluded from an equipped line to which the control station is connected. As an optional feature, a visual signal, usually associated with the control key, can be provided to indicate exclusion is in use. Excluded stations are automatically reconnected to the line when the control station disconnects, either by hanging up or putting the line on hold.

I. Station Restriction

2.28 Individual key stations can be restricted from making outgoing CO/PBX calls. The restricted stations may have intercom line access and can receive calls but cannot break dial tone or tone address if outgoing nonintercom calls are attempted.

J. Music-On-Hold

2.29 This feature transmits music from a customer-provided (CP) music source to calling parties on CO/PBX lines that are placed on hold. ◗Some restrictions apply in the application of music-on-hold to particular line circuits. Refer to Table A.◖

K. Speakerphone

2.30 Normal speakerphone service may be provided at any 1A2 KTS station equipped with a suitable telephone set. (Bell System Practices

TABLE A

LINE CIRCUIT AND MUSIC-ON-HOLD COMPATIBILITY

KEY SYSTEM	MUSIC-ON-HOLD		LINE CIRCUIT
1A2 Key Telephone System	Without		All
	With	451B	400G, D, or earlier (MD)
		498A and 116A1 CM	All

Division 512 contains detailed information on speakerphone connections.)

L. Toll Restriction

2.31 ***Battery Reversal Toll Restriction:*** This feature disallows toll calls from restricted stations but allows calls from unrestricted stations. This feature can only be used with CO circuits that provide a polarity reversal on the tip and ring of the line on toll calls.

2.32 ***Rotary Dial Toll Restriction:*** This feature provides toll restriction on rotary dial lines where CO toll diversion is not available. This rotary dial toll restriction circuit may be optionally provided with "piggy-back" circuit modules to provide digit absorption or to allow restricted stations to call foreign number plan areas. May be used for either loop-start or ground-start operation, with ground start providing the most security against nonallowed calls being placed.

M. ◗Paging

2.33 Paging can be provided on 1A2 KTS by using the 278A paging adapter (Section 518-010-116). The 278A paging adapter is used in conjunction with a manual or dial intercom. The adapter provides a port for CP background music which is cut off when the circuit is seized for voice paging. One adapter is required for each paging zone.

N. COM KEY Features

2.34 The 1A2 KTS can be equipped with COM KEY features using KTUs and modular panels as follows:

SECTION	FEATURE	KTUs
518-215-419	Power Failure Transfer	452A
518-215-419	Lamp Extender	469A
518-215-421	3-Path Intercom	454B
518-215-421	2-Path Intercom	460B◖

STATION APPARATUS

2.35 Generally, common battery telephone sets, with or without keys, capable of providing A-lead control, may be used with 1A2 KTS. Station apparatus may also include separately mounted keys and the station portion of 4A, 5-type, and 101-type key equipment.

MESSAGE WAITING (MW) CONSOLES

A. 6B1 Selector Console

2.36 An 18-station selection MW console with station busy (SB) lamps incorporated in the MW buttons.

B. 7B1 Selector Console

2.37 A 34-station selection MW console with SB lamps incorporated in the MW buttons.

KEY TELEPHONE UNITS (KTUs)

2.38 The 400-series KTUs feature miniature relays, transistors, diodes, etc, mounted, except as noted, on 4- or 8-inch plug-in printed wiring boards. All circuitry to the KTUs is carried through contacts on the plug end of the unit. Depending on the type KTU, there are 18, 20, or 40 contacts on the 4-inch board and 80 contacts on the 8-inch board. The 18- and 20-contact boards have contacts on one side of the mounting surface only; the 40- and 80-contact boards have contacts on both sides of the mounting surface.

> ***Note:*** Contacts are numbered starting with 0, ie, 0-17, 0-19, or 0-39. On 8-inch boards, the upper and lower (A and B) contacts are each numbered 0-39.

Representation of 4- and 8-inch printed wiring boards is shown in Fig. 1 and 2.

2.39 Where practical, the 11 common leads, such as battery and ground, interrupter start (ST), lamp flash (LF), lamp wink (LW), etc, are wired to the same numbered contact on each KTU. This minimizes the amount of strapping required when adding a KTU to a system or changing from one KTU to another.

2.40 Two KTUs in the 400 series have nonstandard connectors:

(a) The 402A KTU (diode matrix) is not a plug-in type unit. It is designed for screw mounting on the lower part of the 31A apparatus mounting of a 501-type (MD) or 502-type (MD) KSU.

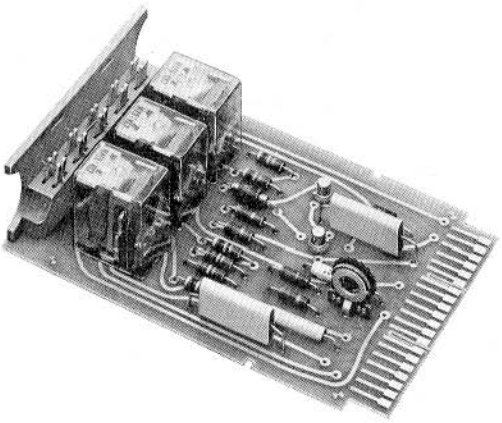

Fig. 1—Typical 4-Inch 20- or 40-Contact 400-Series KTU

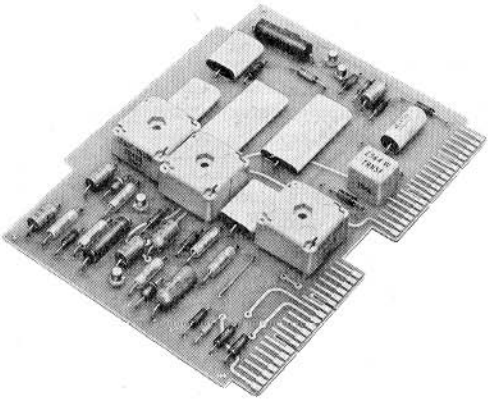

Fig. 2—Typical 8-Inch 80-Contact 400-Series KTU

(b) The 412A KTU (auxiliary lamp relay circuit) plugs into the same receptacle (KS-8586, List 32 connector) as the KS-15900, List 1 interrupter. This unit is designed for use in panels at large installations of 1A2 KTS apparatus where it is desired to have all lamp functions of the system synchronized.

2.41 Table B lists the 400-series KTUs, their functions, size, and number of contacts. Identification information on each KTU is covered in Sections 518-215-400, -401, -402, and -403.

MOUNTING FACILITIES

2.42 Prewired 900-series connectors are used to provide the mounting facilities for 400-series KTUs. Connectors currently in use are:

- 906C (18-pin)
- 913A (20-pin)
- 914A (40-pin)
- ♦973B (20-pin).♦

2.43 The 913A and 914A connectors are identical in size but differ in that the 913A connector has only one row of 20 contacts (pins) while the 914A connector has two rows of 20 contacts (pins). ♦The 973B connector is a 20-pin connector used in the COM KEY systems.♦

2.44 Due to the common lead configuration, as explained in paragraph 2.39, a 4-inch KTU can be plugged into a connector having the same or larger number of pins than the KTU has contacts. For example, a 4-inch, 18-contact KTU can be plugged into an 18-, 20-, or 40-pin connector, etc. However, in some cases a 4-inch, 40-contact KTU can be plugged into a 20-pin connector for limited use. For example, the 421A KTU is a 4-inch, 40-contact KTU featuring a relay having six sets of transfer contacts. When mated with a 20-pin connector, only two sets of transfer contacts can be used. An 8-inch, 80-contact KTU requires two 40-pin connectors mounted in a vertical plane; the only exception is the 419A KTU which can be plugged into a 69B apparatus mounting which has two 20-pin connectors mounted in a vertical plane.

2.45 The connectors are equipped with index clips that mate with slots on the plug-end of the unit to preclude any possibility of the KTUs being inserted in a wrong manner.

2.46 Various combinations of prewired connectors are available in KSUs, panels, and apparatus mountings. These packages permit a wide latitude in installation flexibility. Some packages are available with interrupters, power units, connecting blocks,

TABLE B

400 SERIES KTUs

KTU	CIRCUIT FUNCTION	SIZE (INCHES)	CONTACTS	QUANTITY
400B (MD) 400C (MD) 400D (MD) 400G (MD) 400H	CO/PBX Line	4	18	1 per line
401A (MD) 401B	Manual Intercom Line	4	18	As required
402A	Diode Matrix for Common Audible Signal Control	Not plug-in type KTU; mounts on 501 or 502 KSU		1 per 4 lines and 6 signals or vice versa
404A	Diode Matrix for Common Audible Signal Control	4	18	1 per 6 lines and 12 signals or vice versa
405A (MD)	Multiline Exclusion	4	20	1 per 2 lines
406A (MD)	Supplementary Hold Detector	4	18	1 per 2 lines or stations
407B (MD) 407C	Dial Intercom 10-Code Selector	8	80	1 per intercom system
408A (MD)	Flutter Generator	4	18	1 per 100 lamps and 20 supplementary and/or regular hold keys
412A	Auxiliary Lamp Relay	Special—requires a KS-8586, L32 connector		Used in place of interrupter for LW and LF functions
413A	Auxiliary Ringup	4	18	As required
414A (A&M Only)	Manual Signaling, Ringdown Private Line	4	20	2 per line (1 at originating end; 1 at terminating end*)
415A (MD) 415B	Automatic, DC Signaling Private Line	4	18	
416A	Station Line	4	20	1 per line
417A	Add-On Conference	4	40	1 per conference circuit
418A	Short Range, DC Signaling Private Line	4	20	1 per line
419A	Automatic Signaling, Ringdown Private Line	8	80	2 per line (1 at originating end; 1 at terminating end*)

TABLE B (Contd)

400 SERIES KTUs

KTU	CIRCUIT FUNCTION	SIZE (INCHES)	CONTACTS	QUANTITY
420A	Dial Intercom Long Line	4	18	1 per off-premise line
421A	Power Failure Transfer General Purpose Relay, DSS, or Audible Signaling Suppression	4	40	1 per common audible transfers 1 per DSS code 1 per ringer or buzzer or as required
422B	Station Busy Selector	4	40	1 per 10-code intercom 2 per 19-code intercom
423A	Dial Tone, Busy Tone, and Audible Ringback Tone	4	20	1 per intercom system (not for use in modular panels)
424A (MD) 424C	Dial Intercom 19-Code Selector	8	80	1 per intercom system
425B	Flashing Lamp	8	80	1 per intercom system
426A and 427B (MD) (Series 4) or C	TOUCH-TONE Adapter	8	80	1 of each required per intercom system
		8	80	
428A	Multiline Exclusion	4	40	1 per 2 lines
429A (MD) 429B	Supplementary Hold Detector	4	40	1 per 2 lines or stations
430A	Flutter Generator	4	20	1 per 100 lamps and 20 supplementary and/or regular hold keys
440A (MD)	TOUCH-TONE Adapter	8	80	1 per intercom system
444A 444B	Selector Extender	8	80	1 per intercom system
448A	Delayed Transfer Control	4	40	1 per 2 lines
449A	Immediate Transfer Control	4	40	1 per 2 lines
451B	Music-On-Hold	4	40	1 per 7 lines (not compatible) with 400H KTU)
452A	Power Failure Ringing	4	40	1 per 7 lines
454B (MD) 454C	3-Path Intercom	8	80	1 per intercom system

TABLE B (Contd)

400 SERIES KTUs

KTU	CIRCUIT FUNCTION	SIZE (INCHES)	CONTACTS	QUANTITY
460B (MD) 460C	2-Path Intercom	8	80	1 per intercom system
461A	Manual Signaling, Ringdown Private Line	4	18	2 per line (1 at originating end; 1 at terminating end*)
467A	Low-Voltage Monitor	4	18	1 per system
469A	Lamp Driver	4	18	1 per line per each 20 excess lamps
470A	External Signal	4	20	1 per 2 lines requiring external signaling
471A (MD) 471B	Battery Reversal Toll Restriction	4	18	1 per CO line
476A	Dial Tone, Busy Tone, and Audible Ringback Tone	4	20	1 per intercom system (for use in 642A modular panel)
478B	TOUCH-TONE Adapter	8	80	1 per intercom system
479A (MD) 479B	Rotary Dial Toll Restriction	8	20	1 per CO line
494A	TOUCH-TONE Selector	8	80	1 per intercom system
498A	Music-On-Hold	4	40	Provides music-on-hold for 4 lines, with addition of 116A1 CM. Music-on-hold is provided on additional 3 lines

* Terminating end must be a similar or equivalent tie line unit.

and floor stands. The KSUs are designed primarily for small to medium size 1A2 KTS installation; panels are designed for large or centralized installations; and apparatus mountings are designed to supplement KSUs, or panels, where additional mounting facilities are required. (See Tables C, D, and E.)

2.47 Two prewired connectors (each wired to a screw terminal field) are also available on a 259-type KTU. This KTU provides a standard 7-inch mounting facility for one or two 4-inch 400 series KTUs, having no more than 20 contacts, and is designed primarily to be mounted in the unused lower half of 501-series (MD) and 502-series (MD) KSUs. Another prewired connector is the 272A KTU. This KTU provides a mounting facility for a single 4-inch, 40-contact 400-series KTU. It is designed to mount in standard equipment cabinets and apparatus mountings.

POWER SUPPLY

2.48 Generally, local power (ac and dc) is provided to a KTS for relay operations, talking, and control of lamp and audible signal functions. The 400-series KTUs require an "A" battery (talk) voltage range of 18- to 26-volt dc and a "B" battery (signal) range of 20- to 26-volt dc for satisfactory circuit and transistor operation.

TABLE C

1A2 KEY TELEPHONE SYSTEM KEY SERVICE UNITS

KSU	NUMBER OF CONNECTORS			MAXIMUM NUMBER OF CO/PBX LINES	KTUs PRIMARILY WIRED FOR	TYPE MOUNTING
	18-PIN	20-PIN	40-PIN			
501-Type (MD) and 502-Type (MD) KSU*	6			6†	400-Type, 401A, 415A, and 467A	Wall or Floor Stand
513-Type KSU 515-Type KSU		4	4	8‡	All 400 Series	Wall or Floor Stand§
514-Type KSU		4	4	8‡		
550- and 551-Type KSU*	4			4†	400-Type, 401A, 415A, and 467A	Wall

* Equipped with KS-19175, List 1 interrupter.

† Reduce line circuits by one for each 401-Type, 415-Type, or 467A KTU used.

‡ Reduce line circuits by one for each 4-inch KTU used (other than a 400-type KTU) or by two when an 8-inch KTU is used.

§ 77B (MD) or 77C apparatus mounting.

2.49 The 467A KTU is available to monitor the -24 volt dc supply. When the -24 volt dc supply drops below a predetermined level (-19 volts), a latching circuit operates to turn on a light emitting diode (LED) located on the handle of the KTU. The level is factory set at 19 volts but is adjustable between 17 and 21 volts. This serves as a maintenance aid in areas where low line voltage may be experienced. The 467A KTU can be plugged into any 4-inch connector in place of a 400-type KTU.



Circuits may not operate satisfactorily if the voltage drops below 18-volt or 20-volt dc for circuit supplied by "A" and "B" batteries, respectively. Conversely, transistors may be damaged if any voltage exceeds 26-volt dc. When supplying "A" and "B" batteries from the same source, such as building battery, use 20-volt dc as the minimum voltage.

2.50 Power may be supplied from the following sources:

- Local power units
- CO/PBX battery supply
- Local or building battery supply.

2.51 Local power units recommended for use with the 1A2 KTS are shown in Table F. Refer to Section 518-010-106 for method of selecting proper size power unit.

Caution: Do not supply 400-series KTUs requiring "B" battery (signal) from the "A" battery (talk) source. THIS MAY CAUSE CIRCUIT MALFUNCTIONS.

TABLE D

1A2 KEY TELEPHONE SYSTEM PANELS

PANEL	NUMBER OF CONNECTORS	KTUs PRIMARILY WIRED FOR	SIZE (INCHES)	TYPE MOUNTING
583A (MD)	15 (18-Pin)	400-Type 401-Type, 415-Type, 461A, 467A, 469A, 471-Type, and 479-Type	4 × 23	Relay Rack or Apparatus Cabinet
584-Type	13 (18-Pin)			
597A (MD) 597B	14 (20-Pin)	400-Type 401-Type 413A 414A (A&M Only) 415-Type 416A 418A 420A 421A 423A 430A 461A 467A 469A 471-Type 479-Type		
598A (MD) 598B	14 (40-Pin)	400-Type 401-Type 413A 414A (A&M Only) 415-Type 416A 417A 418A 420A 421A 422B 423A 428A 429A (MD) or 429B 430A 448A 449A 451B 461A 467A 469A 471-Type 479-Type 498A		

TABLE D (Contd)

1A2 KEY TELEPHONE SYSTEM PANELS

PANEL	NUMBER OF CONNECTORS	KTUs PRIMARILY WIRED FOR	SIZE (INCHES)	TYPE MOUNTING
601A	6 (40-Pin)	407B (MD) or 407C 424A (MD) or 424C	8 × 6	Relay Rack or Apparatus Cabinet
602A	6 (40-Pin)	407B (MD) or 407C 422B 423A 424A (MD) or 424C 425B		
603A	4 (40-Pin)	426A 427B (MD) Series 4 or 427C	8 × 4-1/2	
620A* 620A2	8 (40-Pin)	400-Type 401-Type 413A 414A (A&M Only) 415-Type 416A 419A 461A 467A 469A 471-Type 479-Type	8-1/2 × 18-3/8	Mounts on Wall
626A*	8 (40-Pin)	424B or C 440A (MD) or 478B 444A 454B 460B 469A 494A	8-1/2 × 18-1/2	
630A*	10 (40-Pin)	400-Type 401-Type 407-Type 415-Type 424-Type 494A 498A	12-3/4 × 18-3/8	

♦TABLE D (Contd)♦

1A2 KEY TELEPHONE SYSTEM PANELS

PANEL	NUMBER OF CONNECTORS	KTUs PRIMARILY WIRED FOR	SIZE (INCHES)	TYPE MOUNTING
641A*	4 (40-Pin)	407B (MD) or 407C 424A (MD) or 424C 425B 440A (MD) or 478B 479-Type 494A	4-1/4 × 18-3/8	Mounts on Wall
642A*	4 (40-Pin)	417A 418A 420A 421A 422B 425-Type 428A 429A (MD) or 429B 430A 440A (MD) or 478B 448A 449A 451B 452A 467A 476A 478B 479-Type 498A		

* Modular panel.

2.52 When using CO, PBX, local, or building battery supply, fuse in accordance with standard practices, as follows:

- One 2-ampere fuse for talking battery designated A
- One 2-ampere fuse for signaling battery designated B
- One 2-ampere fuse per maximum 50-signal lamps (51A)
- One 2-ampere fuse for dc audible signal supply.

Note: When the same dc source is used for talking and audible signal operation, a noise suppression capacitor, such as the 23A KTU, should be installed across the battery supply.

2.53 Some 400-series KTUs are interrelated electrically, and it is recommended the dc power for any given 1A2 KTS arrangement be provided from a common source.

Note: When using a local power unit and the minimum voltage cannot be assured when adding KTUs to an existing system, the power unit should be replaced by a larger capacity unit.

2.54 Power (ac) for lamps and audible signals may be supplied from a number of different sources, provided each source used serves a separate

TABLE E

1A2 KEY TELEPHONE SYSTEM APPARATUS MOUNTINGS

APPARATUS MOUNTING	NUMBER OF CONNECTORS		MAXIMUM NUMBER OF CO/PBX LINES	PRIMARILY WIRED FOR	SIZE (INCHES)	TYPE MOUNTING
	20-PIN	40-PIN				
69B*	2		2‡	4-inch 18- or 20-contact KTUs§	2 × 8	Relay rack or standard apparatus cabinet
69D*		2	2‡	All KTUs except 407B, 424-type, and 425B		
69G*		2	—	407B, 424-type, and 425B		
69E†		2	2‡	All KTUs except 407B or 424-type		One may be added to 514 KSU
69F†		2	2‡			Three may be added to 513A1 KSU
110A#		2	2	All KTUs except 469A	8-1/2 × 9	Wall mounting

* Requires an A25B connector cable to extend wiring to distributing point.

† Equipped with 6-foot cable tail for connection to external connecting block outside KSU.

‡ Reduce line circuits by one for each 4-inch KTU used other than a 400-type KTU or by two when an 8-inch KTU is used.

§ Will also accept the 8-inch 419A KTU.

Requires two A25B connector cables to extend wiring to distributing point.

TABLE F

CURRENT AND VOLTAGE RATINGS OF POWER UNITS RECOMMENDED FOR 1A2 SYSTEM ARRANGEMENTS

TYPE POWER UNIT	TYPE OUTPUT	VOLTAGE RANGE	AMPERES AT MIN. VOLTAGE	NO. OF FUSES*	USE
101J† (MD)	DC	20-26	4.0	6	Use 24V tap for circuits requiring talk bat and/or relay operation
	AC (60 Hz)	10-11	5.0	7	Lamp operation max 125 lamps (51A) ¶
		17-19	1.6	1	Buzzer and/or bell operation
101G (J86731B)	AC (60 Hz)	10-11	17	16	Lamp operation max 425 lamps (51A) ¶
20-type 19-type	DC TALK	18-26	0.6 to 1.5 total	1	Circuits requiring talk bat (A BAT.)
	DC SIGNAL	20-26	1.5	1	Relay operation (B BAT.). Total dc load cannot exceed 1.5 amps
	AC (60 Hz)	8.75-11	4.5 to 1.4 ‡	2 24B (3AMP)	Lamp operation max 112 lamps (51A) if 18V ac tap is not used ¶
		16-20	1.4	1	Buzzer and/or bell operation
	AC (30 Hz) 113A FREQ GEN	110-125	—	—	Operates 1 to 16 ringers with series diodes (diode matrix) or 1 to 6 ringers with series capacitors
30-type 29-type	DC TALK	18-26	1 to 4 total	1	Circuit requiring talk bat (A BAT.)
	DC SIGNAL	20-26	4	6	Relay operation (B BAT.). Total dc load cannot exceed 4 amps
	AC (60 Hz)	8.75-11 or 9.75-12	12	6 24B (3AMP)	Lamp operation max 300 lamps (51A) ¶
		16-20	1.6	1	Buzzer and/or bell operation
		8.75-11	—	1	Interrupter operation
	AC (30 Hz) 113A FREQ GEN	110-125	—	—	Operates 1 to 16 ringers with series diodes (diode matrix) or 1 to 6 ringers with series capacitors
101G (J86731) Modified for 1A2 Operation	DC TALK	18-26	0.6 to 1.5 total	1	Circuits requiring talk bat (A BAT.)
	DC SIGNAL	20-26	1.5	1	Relay operation (B BAT.). Total dc load cannot exceed 1.5 amps
	AC (60 Hz)	9-11	1.4 or 2.8	1 §	Lamp operation max 36 lamps (51A) at 1.4 amps or 72 lamps at 2.8 amps ¶
		16-20	1.4	1	Buzzer and/or bell operation. Do not use when 10V tap is double fused
	AC (20 Hz)	75-110	—	—	Ringer operation max 8 ringers without capacitor when using diode matrix or max 2 ringers with capacitors
34-type	AC (60 Hz)	8.75-11 or 9.75-12	25 continuous 35 intermittent	15 24B (3AMP)	Lamp operation max 625 lamps (51A) ¶
		8.75-11	—	1	Interrupter Operation

TABLE F (Contd)

CURRENT AND VOLTAGE RATINGS OF POWER UNITS RECOMMENDED FOR 1A2 SYSTEM ARRANGEMENTS

TYPE POWER UNIT	TYPE OUTPUT	VOLTAGE RANGE	AMPERES AT MIN. VOLTAGE	NO. OF FUSES*	USE	
34-type	AC (60 Hz)	8.75-11 or 9.75-12	25 continuous 35 intermittent	15 24B (3 AMP)	Lamp operation max 625 lamps (51A) ¶	
		8.75-11	–	1	Interrupter operation	
67B1	AC (60 Hz)	10-11	10	5 24B (3 AMP) 1 24C (2 AMP)	Lamp operation 250 (51A) lamps ¶	Wall Mounted
		10	0.3		Interrupter operation	
67C1		10-11	10		Lamp operation 250 (51A) lamps ¶	Rack Mounted
		10	0.3		Interrupter operation	
79B1	DC SIGNAL	20-26	1.5	24B (3 AMP)	Relay operation (B BAT.)	
	DC TALK	20-26	0.6	1	Circuits requiring talk battery (A BAT.)	
	30 Hz AC	110-125	–	–	Operates 1 to 16 ringers with series diodes (diode matrix) or 1 to 6 ringers with series capacitors	
	30 Hz AC INTERRUPTED	110-125	–	–		
	AC 60 Hz	8.75-11	5.5	24F (5 AMP)	Lamp operation max 162 lamps (51A)	
	AC 60 Hz INTERRUPTED	8.75-11	5.5	24F (5 AMP)		
79B2	DC SIGNAL	18-27	1.9	24B (3 AMP)	Relay operation (B BAT.)	
	DC TALK	18-27	0.6	1	Circuits requiring talk bat (A BAT.)	
	30 Hz AC	110-125	–	–	Operates 1 to 16 ringers with series diodes (diode matrix) or 1 to 6 ringers with series capacitors	
	30 Hz AC INTERRUPTED	110-125	–	–		
	AC 60 Hz	8.75-11	5.5	24F (5 AMP)	Lamp operation max 162 lamps (51A)	
	AC 60 Hz INTERRUPTED	8.75-11	5.5	24F (5 AMP)		
90B1	DC SIGNAL	20-26	4.0	1	Relay operation (B BAT.)	
	DC TALK	18-26	1.0	1	Circuits requiring talk bat (A BAT.)	
	30 Hz AC	110	–	–	Operates 1 to 16 ringers with series diodes (diode matrix) or 1 to 6 ringers with series capacitors	
	30 Hz AC INTERRUPTED	110	–	–		
	AC 60 Hz	8.75-11	12.0	24F (5 AMP)	Lamp operation max 300 lamps (51A)	
	AC 60 Hz INTERRUPTED	10	12.0	24F (5 AMP)		
215B1	AC (60 Hz)	15-18	2.4	3 24C (2 AMP)	MW lamps on Message Waiting consoles	

* 24C (2 AMP) fuse unless designated otherwise.

† Should be placed a minimum of 3 feet from apparatus.

‡ Combined total output not to exceed 39 volt-amp.

§ For 2.8 amp output double fuse 10V tap.

¶ Maximum number of lamps that may be operated at same time.

circuit or a separate group of circuits; ***ac sources should never be connected together except for common grounds.***

2.55 A reserve power supply, coded the 47C power unit (battery reserve), is available for the 1A2 KTS. Also available is an optional 116A frequency generator for plugging into the 47C power unit. The 47C power unit is arranged for the addition of a plug-in KS-20390L1 (nickel cadmium) battery which must be ordered separately.

PROTECTION AND GROUNDING

2.56 Improper protection of KTS can result in station equipment damage that may require frequent visits to station locations for the purpose of replacing defective line equipment, power supplies, lamp, and fuses. Damage of this type is usually caused by lightning or power induced voltage transients. A good protection system can substantially reduce these problems. The KTS protection usually consists of basic telephone line protection and proper grounding procedures. Installation of KTSs should be installed in accordance with Section 518-010-105.

LIMITATIONS

2.57 Normal loop ranges, such as ringing, talking, lamp, etc, of the plug-in KTUs are covered in the CDs and SDs and in Sections 518-215-400, -401, -402, or -403. These limits should not be exceeded or failure of the apparatus could occur.

2.58 In a 1A2 KTS where common audible and visual signals are provided via locally furnished power, interruption of this power supply will render all common audible and visual signals inoperative during the period of power failure. Incoming service during periods of power failure can be maintained by providing any of the following features:

- Reserve power source such as the 47C power unit and the 116A frequency generator. See Section 167-449-101.
- Power failure transfer circuits.
- Connection of line ringers.



The installation of any of the features listed in paragraph 2.58 should be made only in accordance with the service order or local practices.

2.59 Outgoing calls will not be affected by a power failure. Whenever the CO/PBX line circuit is in an idle condition, a path is established that connects the telephone sets directly to the CO/PBX.

3. ARRANGEMENTS

3.01 System arrangements are shown divided into four basic services:

- Line (Fig. 3)
- Auxiliary (Fig. 4)
- Intercom (Fig. 5)
- Auxiliary control (Fig. 6).

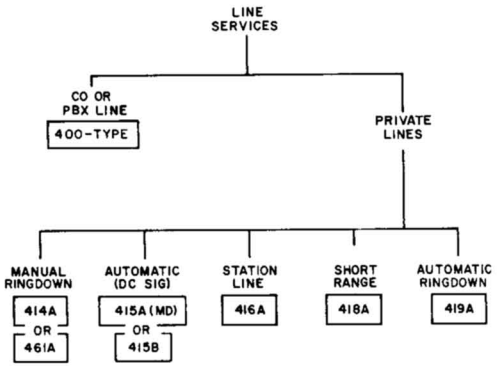

Fig. 3—Line Services

3.02 The type, size, and method of installation of any 1A2 KTS arrangement is dependent upon the following:

- Immediate needs of the customer
- Future requirements of the customer
- Number and type of 400-series KTUs to provide the required services and features
- Adequate size mounting facility (KSU, panel, etc) designed to accept the required KTUs
- Number and type of telephone sets required

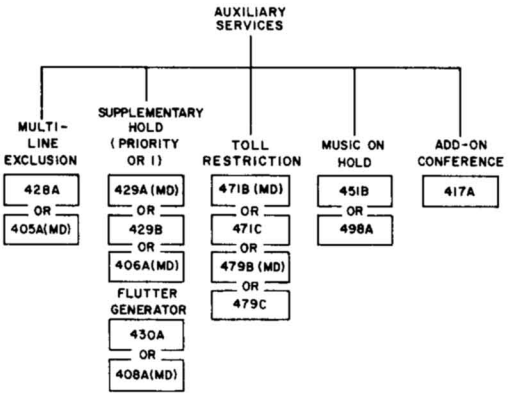

Fig. 4—Auxiliary Services

- Type and size of the power plant
- Available space for safely mounting apparatus cabinets, relay racks, power plants, connecting blocks, etc
- Availability of 110-volt ac power outlet.

Note: All of these factors must be taken into consideration in order to provide for the orderly growth of any arrangement.

3.03 Where feasible, consideration should be given to centralizing the installation. Large centralized installations should make use of the connecting block arrangement covered in Section 518-010-101.

3.04 A 1A2 KTS should be arranged to permit maximum flexibility. Accordingly, ***all*** leads from the connectors of mounting facilities, such as panels, apparatus mountings, etc, should be terminated at a connecting block termination field as covered in Section 518-010-101. This should result in a standard termination at ***every*** installation and permit ease of wiring and strapping, not only during the initial installation but for any subsequent rearrangements and changes.

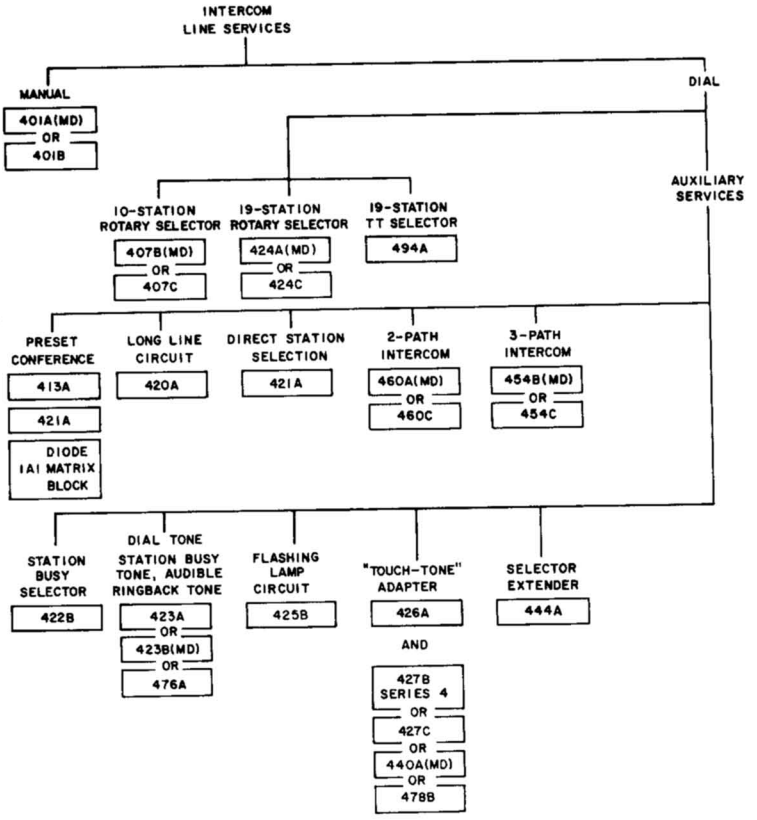

Fig. 5—Intercom Services

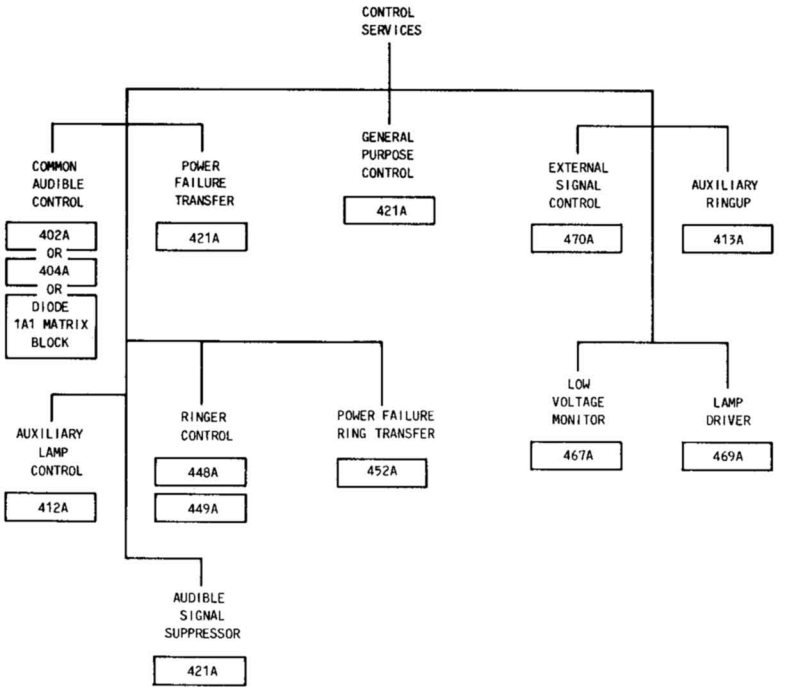

Fig. 6—Auxiliary Control Services

SERVICE

KEY TELEPHONE UNITS—LINE SERVICES

DESCRIPTION

1A2 KEY TELEPHONE SYSTEM

1. GENERAL

1.01 This issue provides schematic information for the 400-series KTUs which provide line services. Line service KTUs provide switching, control, and signaling functions which permit key telephones in a 1A2 KTS to be connected to CO or PBX lines, key telephone sets of other systems, or private lines. These units include circuits for audible or visual signals and a time-out feature for incoming calls which are not answered.

1.02 This section is reissued to:

- Add information on the 400H KTU Issue 2.

1.03 The following KTUs and their functions are covered in this section.

- ▶400B, C, D, G, and H Issue 1 (all MD) and 400H Issue 2—CO or PBX Line Circuit.◀
- 414A—Manual Signaling, Ringdown, Private Line Circuit.
- 415A—Automatic, DC Signaling, Private Line Circuit.
- 416A—Station Line Circuit.
- 418A—Short Range, DC Signaling, Private Line Circuit.
- 419A—Automatic Signaling, Ringdown, Private Line Circuit.
- 461A—Manual Signaling, Ringdown, Private Line Circuit.

A. Mechanical

1.04 All circuit components on these KTUs are mounted in a plug-in printed wiring board, one end of which is equipped with contacts. A 4-inch board may have 18, 20, or 40 contacts; an 8-inch board will have 80 contacts (requiring two vertical 40-pin connectors). The circuit boards plug into mating connectors in key service units, panels, or apparatus mountings. Wiring from the connectors will be dedicated or nondedicated leads. Dedicated leads are those that normally appear on the same contacts of all KTUs, such as supply voltages and grounds, and are normally factory-wired. Nondedicated leads are those whose designation and function vary and are made available for installer connections. Figures 1 and 2 show typical 4- and 8-inch KTUs.

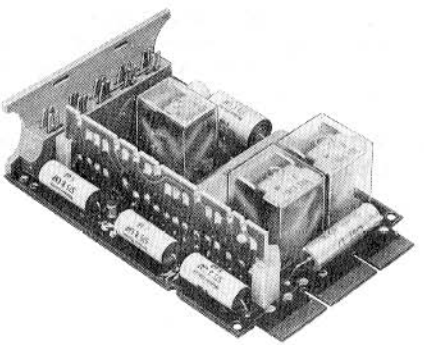

Fig. 1—Typical 4-Inch KTU

NOTICE
Not for use or disclosure outside the
Bell System except under written agreement

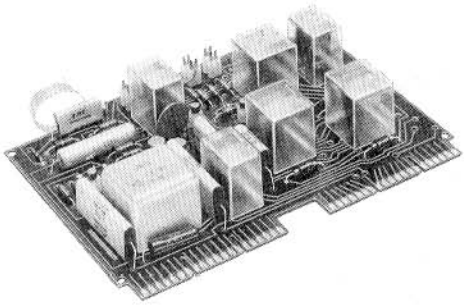

Fig. 2—Typical 8-Inch KTU

B. Electrical

1.05 Functional schematics cover the basic circuitry of each KTU, contacts used, and its relationship to telephone sets, other KTUs, power supplies, and apparatus. Dashed lines are used to simplify the schematics and to indicate intermediate circuitry. If full schematics are required, refer to the SDs listed in paragraph 1.08.

1.06 Voltages required for operation of the KTU, or provided to associated apparatus by the KTU, are shown with their connector pins. Other voltages may appear on the contacts of the mating connector, but not on the KTU, depending on the mounting arrangement.

1.07 KTUs may require the following power supply voltages and their associated grounds:

- -24V (B battery) for control
- -24V (A battery) for talk
- ±10V for visual signals
- ±105V for audible signals.



Before installing KTUs, check that the power supply polarities are correct; KTU damage may occur with the wrong polarities.

1.08 This issue of the section is based on the following drawings:

SD-69513-01, Issue 15—400D KTU (MD)

SD-69651-01, Issue 3—400G KTU (MD)

SD-69942-01, Issue 1—400H ▶Issue 1◀ KTU

▶SD-69942-01, Issue 4B—400H Issue 2 KTU◀

SD-69559-01, Issue 9—414A, 415A, 416A, 418A, 419-type, 461A KTUs.

If this section is to be used with equipment or apparatus reflecting later issues of the drawings, reference should be made to the CDs and SDs to determine the extent of the changes and the manner in which the section may be affected.

2. IDENTIFICATION

A. 400B, C, D, G, and H KTUs (CO or PBX Line Circuit)

2.01 The latest version of the line circuit KTU is the 400H ▶Issue 2.◀ The 400B, C, D, G, ▶and H Issue 1 KTUs are rated MD.◀ The earlier KTUs may be used for replacements or new installations when the features provided by later models are not required. There are a large number of earlier KTUs in service in the field (particularly 400Ds), and they should not be replaced if they are operating satisfactorily.

2.02 The 400-type KTUs (Fig. 3 through 9) are 4-inch 18-contact units used to provide a key telephone set with CO or PBX line services. In conjunction with the set, it provides the following features.

- Pickup and hold of a CO or PBX line.
- Flashing line lamp on incoming call.
- Audible line signal and/or common audible signal on incoming call.
- Steady lamp indicating busy condition.
- Steady or winking lamp indicating hold condition.
- Talking circuit connection to CO or PBX line maintained during periods of power failure.
- Individual line time-out on unanswered incoming calls with different timing interval options.

- Delayed hold release.

- Maximum loop resistance of 50 ohms or approximately 1000 feet of 24-gauge IW cable between KTU and telephone set.

2.03 If false release of the hold circuit is encountered, verify type of serving facility (CO, Centrex, or PBX) and apply appropriate option. Variables may be encountered in any given application which will result in unexpected false releases. In these cases, the option applied must be determined locally. See Tables A, B, and C.



In the 400D KTU (MD), option ZD is replaced by option ZJ. However, it is not necessary to update circuits previously modified with option ZD.

Note: Options ZC, ZD, and ZJ are installer provided options that delay the release of the local hold circuit when the telephone line is opened for short intervals. These line opens usually occur when the switching machine reswitches the line after the transmission path has been established. The delay interval prevents false release of hold during this action. It is not recommended that these options be applied on a widespread basis, but only if false release from hold is actually encountered.

2.04 The number of bridged ringers that may be used with each 400B, C, D, G, H ▶Issue 1 (all MD), or H Issue 2 KTU◀ is listed in Table D.

2.05 The 400B KTU (MD) can be utilized in conjunction with 701 PBXs and the central offices listed in Table E, provided the operating characteristics in paragraph 2.06 are acceptable.

2.06 The 400B KTU (MD) has some restrictions which result from the unit's sensitivity to certain line conditions which are common to all types of telephone lines. The 400B KTU (MD) is susceptible to the following charcteristics.

(a) ***Longitudinal Voltages:*** KTU may ring up falsely in response to longitudinally induced 60-Hz voltage greater than 12 volts RMS. KTU may also fail to hold when induced voltages exceed 65 volts RMS in the answer state.

(b) ***Polarity of Central Office Battery:*** Hold circuit will not respond when the line is associated with negative grounded battery plants such as No. 101 Electronic Switching System.

(c) ***Hold Circuit:*** Hold circuit cannot be released from central offices during permanent signal release routine. Release time of the hold circuit exceeds the release signal interval.

(d) ***Flash and Recall:*** Circuit connects a shunt across the line for 100 to 250 milliseconds when the switchhook is depressed during the station flash operation. This abbreviates or completely suppresses the flash indication.

(e) ***Time-out:*** Short time-out interval cannot be altered by installer.

(f) ***Transmission:*** A 15 dB transmission loss can be expected in arrangements that require line transmissions while the holding bridge is connected to the line.

2.07 The 400C KTU (MD) has the same characteristics as the 400B (MD) except those covered in paragraph 2.06(a).

Note: 400-type KTUs may serve a maximum of 20 multipled lamps.

2.08 The 400D KTUs (MD) stenciled SD-69513-01, Issue 10, have been modified by removal of the C4 capacitor. With this change, the circuit will not release a held line on battery reversal.

2.09 Improvements to overcome silicone contamination of the relay contacts have been included on Issue 12 and subsequent issues of the 400D KTU (MD). Repaired units containing these changes can be identified by a star or C stamped on the label after the issue number or by the new label.

2.10 The 400D KTUs (MD) stenciled SD-69513-01, Issue 13, and KTUs repaired after July 1, 1971, will have a new label which will include space for the line number and the words "Outward" and "Trouble." If the KTU is removed from service because of trouble, it shall be marked "Trouble" in the space provided before being turned in for repair. If the KTU is removed from service for reasons other than trouble, it shall be marked "Outward." The new KTUs will have a separate

TABLE A
APPLICATION OF OPTIONS ZC AND ZJ—400D KTU (MD)

PBX		TYPE OF CENTRAL OFFICE						
		STEP-BY-STEP		PANEL	NO. 1 X-BAR	NO. 5 X-BAR		ESS
		WITHOUT PERM. SIGNAL TRUNKS	WITH PERM. SIGNAL TRUNKS			UNMOD PERM. SIGNAL TRUNKS	MODIFIED PERM. SIGNAL TRUNKS	
None		*	*	*	*	ZJ	ZJ	ZC
701	Outgoing	*	*	*	*	ZJ	ZJ	ZC
	Incoming	*	*	*	*	ZJ	ZJ	ZC
756/757/758		*	*	*	*	ZJ	ZJ	ZC
770		ZC	ZC	ZC	ZC	ZC	ZC	ZC
800/801		ZJ	ZJ	ZJ	ZJ	ZJ	ZJ	ZC
805		ZJ	ZJ	ZJ	ZJ	ZJ	ZJ	ZC
812		ZC	ZC	ZC	ZC	ZC	ZC	ZC
CSS 201		*	*	*	*	*	*	*

* None required.

label with the date of manufacture placed on the back of the handle (ie, 3-71 will identify a KTU manufactured in March 1971). The repaired KTUs will have the date of repair stamped on the printed wiring board. An orange repair date stamp indicates those units tested defective when returned from the field, and a white stamp indicates those tested O.K.

2.11 Wiring changes were made to the 400D KTU (MD) manufactured after November 1974 to cover specific trouble indications. The modified KTUs are marked Issue 15 and are recommended where the following conditions are encountered:

- Power supply voltage variations
- Non A-lead stations behind KTU
- High resistance ground.

2.12 In some instances, noise or crosstalk may be encountered due to an unbalanced condition of the transmission circuit of 400D and G KTUs while on hold. The condition can be corrected by placing a KS-19524,L9 capacitor (60 μF), or equivalent, across leads R (CO) and R (STA). The capacitor should be connected to the leads where they appear on the connecting blocks associated with the mounting arrangement involved. A multiple point may be required using either 183A2 adapters on the terminals or using spare terminals or another 66-type connecting block. It is not recommended that the capacitor be added to the pins of the connector where the KTU is plugged in. (The use of a capacitor is never required in a 400H KTU because its transmission circuit is perfectly balanced.)

2.13 Either the 400G KTU (MD) or the 400H KTU can be used for any 1A2 KTS CO or PBX line circuit application. ▶The 400H KTU is subject to restrictions described in paragraph 2.17.◀ In addition to circuit improvements, the 400G KTU (MD) and 400H KTU differ from earlier 400-type KTUs in that they have a line status indicator and option plugs for connecting the various options.

2.14 Line status is indicated by a light emitting diode (LED) located in the option block-handle assembly of the 400G KTU (MD) (Fig. 4) or 400H

TABLE B
HOLD RELEASE OPTIONS—400G KTU (MD)

PBX	TYPE OF CENTRAL OFFICE						
	STEP-BY-STEP		PANEL	NO. 1 X-BAR	NO. 5 X-BAR		ESS
	WITHOUT PERM. SIGNAL TRUNKS	WITH PERM. SIGNAL TRUNKS			UNMOD PERM. SIGNAL TRUNKS	MODIFIED PERM. SIGNAL TRUNKS	
None	R	R	R	R	R	R	*
701	R	R	R	R	R	R	*
756/757/758	R	R	R	R	R	R	*
770	*	*	*	*	*	*	*
800/801	R	R	R	R	R	R	*
805	R	R	R	R	R	R	*
812	*	*	*	*	*	*	*
CSS 201	*	*	*	*	*	*	*

* Factory-provided option, 600 ms (minimum) time-out.

Note: R option is short time-out, 25 ms minimum.

KTU (Fig. 7). The LED will light in all active states of the line circuit as shown in Table F. Those 400G KTUs (MD) labeled Issue 2 ▶or 3◀ are equipped with a 556A LED which replaces the original 538A LED.

2.15 Features or service options are connected in the 400G KTU (MD) (Fig. 5, 6, and Table B) and in the 400H KTU (Fig. 8, 9, and Table C) by means of option plugs in the option block-handle assembly. Spare option plugs are available for the 400G KTU (MD) by ordering a D-180768 Kit of Parts; each kit contains five option plugs. For the 400H KTU, ▶the KS-21290L7 option plugs are available as COM CODE 841732613.◀

2.16 The 400G KTU (MD) can be arranged for short interval ringup time-out (approximately 5 seconds) by providing option Z or, for long interval time-out (approximately 20 seconds), by removing option Z. With the 400H KTU, Issue 1 (MD), a short interval time-out is factory-provided and cannot be altered. ▶In Issue 2 or later of the 400H KTU, the time-out interval can be lengthened by means of option plugs in the block handle assembly.◀

2.17 The 400H KTU has a pair of test pins, accessible through a window in the front of the option block-handle (Fig. 7), which allows an installer or repairperson to determine whether the KTU is on an active CO/PBX line even when no telephone set is connected. When the two pins are shorted together with a screwdriver blade, the line status LED will light and the associated interrupter motor will start if the KTU is connected to an active line. If it is not, the LED will remain dark, but the interrupter motor will still start. In COM KEY* 2152, the interrupter runs continuously as long as power is connected.

* Trademark



Observe the following restrictions on the use of the 400G KTU (MD) and 400H KTUs:

TABLE C

HOLD RELEASE OPTIONS – 400H KTU

PBX	TYPE OF CENTRAL OFFICE						
	STEP-BY-STEP		PANEL	NO. 1 X-BAR	NO. 5 X-BAR		ESS
	WITHOUT PERM. SIGNAL TRUNKS	WITH PERM. SIGNAL TRUNKS			UNMOD PERM. SIGNAL TRUNKS	MODIFIED PERM. SIGNAL TRUNKS	
None	R	R	R	R	R	R	S
701	R	R	R	R	R	R	S
756/757/758	R	R	R	R	R	R	S
770	S	S	S	S	S	S	S
800/801	R	R	R	R	R	R	S
805	R	R	R	R	R	R	S
812	S	S	S	S	S	S	S
CSS 201	S	S	S	S	S	S	S

Note: S option is factory-provided for long time-out. R option is short time-out.

- ***The 400H KTU must be in the off-hook state with dial tone on the line for at least 2 seconds before it can be put into the hold state. When testing a 400H KTU:***

  (1) ***Go off-hook***

  (2) ***Listen for dial tone***

  (3) ***Wait at least 2 seconds after dial tone is received***

  (4) ***Depress hold button***

  (5) ***If a test call is dialed, wait at least 2 seconds after the called end answers before placing the line on hold.***

- ***The 400H KTU will not go into the hold state if the noise voltage on the tip and ring leads at the time the HOLD button on the telephone set is depressed is greater than 2.5 volts. ▶In addition, following rotary dialing or CO switching noise, an interval of 2 seconds must pass before the 400H KTU can be placed in the hold condition.◀***

- ***For large centralized installations, 584C panels fully loaded with 400H Issue 1 (MD) KTUs are limited to two panels per 19- or 20-type power units and five panels per 29- or 30-type power units. Fully loaded 620A panels are limited to eight panels per 90-type power units. ▶This restriction does not apply to Issue 2 or later of the 400H KTU.◀***

- ***The 400H KTU contains a relay having mercury-wetted contacts and must be mounted in the proper position. Current production of the 400H KTU has an arrow printed on the front label which indicates the proper installation position.***

- ***When a 109A interconnect unit is used to provide music-on-hold with a 400H KTU, a 106D varistor must be placed***

▶TABLE D◀
RINGING BRIDGE LIMITATIONS—400-TYPE KTU

KTU	MINIMUM RMS RINGING VOLTAGE (20 Hz)	MINIMUM LEAKAGE RESISTANCE (OHMS)	MAXIMUM NUMBER OF BRIDGED RINGERS			
			0	1	2	3
			MAXIMUM RINGING RANGE (OHMS)			
400B (MD)	72V	15K	4446	1788	1119	814
	80V		6062	2438	1526	1110
	84V		6871	2763	1729	1258
		10K	5140	2434	1594	1185
400C (MD)	72V	15K	4060	1722	1093	800
	80V		5537	2349	1490	1091
	84V		6225	2662	1689	1237
		10K	4799	2354	1560	1166
400D (MD)	72V	15K	2408	1334	922	705
	80V		3284	1819	1258	961
	84V		3722	2062	1426	1090
		10K	3148	1873	1333	1034
400G (MD) 400H Issue 1 (MD) 400H Issue 2	72V	10K	3100	2000	1475	1150
	80V		4000	2550	1900	1500
	84V		4500	3000	2125	1625
	84V	20K	5850	3500	2500	1800

between option block terminals 5 and 6 of the 109A interconnect unit.

- *The short ringing time-out interval provided in the 400H Series 1 (MD) KTU may be unsuitable for use with manual PBXs. ▶Issue 2 of the 400H KTU can be used in these applications with option X provided.◀*

- *For proper lamp operation, the 400H KTU requires ac power with the proper connections of the ac voltage and ground leads. ▶A dc voltage cannot be used for lamping or interrupter.◀ Care should be taken to avoid shorting the L and LG leads as this may result in damage to the KTU. (With earlier 400-type KTUs, shorting of the L and LG leads resulted in a blown fuse.)*

- *The 400H KTU is compatible only with Issue 5 and later issues of the 412A KTU (auxiliary relay circuit). Issues 1 through 4 of the 412A may be used if the 186-type protection networks are clipped out of the circuit.*

- *When music-on-hold is required in conjunction with 400-type line circuits, the music-on-hold KTU installed must be compatible with the mounting facilities*

♦ TABLE E ♦

KTU COMPATIBILITY WITH CENTRAL OFFICES

TYPE KEY TEL SYS	TYPE KTU	ESS			NO. 5 X-BAR CENTREX			NO. 1 X-BAR	NO. 5 X-BAR	PANEL	SXS WITH PS TRUNKS
		BRIDGE RESW OPEN* 462 ms	CKT MOD	RLS ON PS OPEN* 1000 ms	BRIDGE RESW OPEN* 20 ms	CKT MOD	RLS ON PS OPEN* 144 ms	RELEASE ON PS OPEN*			
								400 ms	144 ms	530 ms	1000 ms
1A2	400A, B, and C (all MD)	Yes	—	No	Yes	—	No	No	No	No	No
	400D (MD)	No	OPT ZC	Yes	No	OPT ZJ	Yes	Yes	Yes	Yes	Yes

* Reswitch (Resw) opens specified are maximums and permanent signal (PS) release opens are specified at minimums.

▶TABLE F◀
INDICATIONS OF LINE STATUS LED

LINE STATUS	LED CONDITION	
	400G KTU (MD)	400H KTU
Idle	Off	Off
Ringing	Steady	Flashing
Off-Hook	Steady	Steady
Hold	Steady	Winking

available ▶and the type of 400 line circuit utilized.◀ A 451-type KTU cannot be plugged into a connector intended for a 498A, and vice versa (see Section 518-215-401). ▶Table G provides compatibility information for providing music-on-hold.◀

- ***If the A and A1 leads are shorted for more than 15 seconds, the 400H KTU may go into a hold condition ▶when the short is removed. This condition may also occur when auxiliary equipment is used on the line which grounds the A lead.◀ It may be released from hold by momentarily unplugging the KTU, momentarily shorting the tip-ring leads, ▶or taking a phone off-hook on the associated line.◀***

- ***Use of a 400H KTU behind PBXs equipped with J53050F interconnect units (trunk level access to customer-provided equipment), of models earlier than Issue 2B, may result in reports of extra dial pulses. If the interconnect unit is equipped with a 14A resistance lamp, replace with a 14B.***

- ***A 400H KTU cannot be used in a 50A CPS, 8A KTS ▶or 4ACD◀ because of a circuit in compatability.***

- ***Under some conditions, tests made at the local test desk or by mechanized loop test (MLT) may cause the 400H KTU to ring up.***

Note: Care should be taken to observe ***all*** the conditions noted in the use of the 400H KTU to reduce possible customer reports or service outages.

▶TABLE G◀
MOUNTING, LINE CIRCUIT, AND MUSIC-ON-HOLD COMPATIBILITY

KEY SYSTEM		MUSIC-ON-HOLD*		LINE CIRCUIT
1A2 Key Telephone System		Without		All
		With	451B	400G, D, or earlier (MD)
			498A and 116A1 CM	All
COM KEY 718 1434 2152	570A 580A 702A 703A	Without		All
		With	451B	400G, D, or earlier (MD)
	570B 580B 702B 703B	Without		All
		With	498A and 116A1 CM	All

*Information on the 498A KTU and 116A1 CM can be found in Section 518-215-401. The 451B KTU is covered in Sections 518-215-401 and 463-341-103.

B. 414A KTU (Manual Signaling, Ringdown, Private Line Circuit)

2.18 The 414A KTU (Fig. 10) is a 4-inch, 20-contact unit for connecting a telephone set to a private line terminated at a distant location. Another tie line circuit KTU is required at the distant location. A nonlocking key on the telephone set, or an externally mounted key in addition to the line pickup key, is required for signaling. The 414A KTU provides a talking and manual signaling circuit with the following operating features.

- Flashing line lamp on an incoming call.
- Steady lamp indicating line busy.
- Time-out on unanswered incoming calls; optional time intervals.
- Choice of audible signals, common audible, steady, or interrupted.
- Audible ringback signal option so calling party can hear a tone from the distant telephone.
- Idle line termination when KTU is connected to lines having repeaters.
- A spare relay contact is available for control functions.
- Line hold feature is ***not*** available.
- Ringing ranges are shown in Table H.

TABLE H
RINGING RANGES—414A KTU

MINIMUM RMS RINGING VOLTAGE	STANDARD LOOPS 15K-OHM LEAKAGE	UNIGAUGE LOOPS 20K-OHM LEAKAGE*
		OHMS
75, 84, 92 volts (20 Hz)	2600 ohms	4000, 4600, 5000
110, 120 volts (30 Hz)		5000, 5400

*These ringing ranges are also valid with unigauge plant which may use an E6 repeater in each subscriber loop.

- Ringing ranges with -20 volt battery supply are shown in Table I.

TABLE I
RINGING RANGES—415A KTU

MINIMUM BATTERY VOLTAGE	STANDARD LOOPS 15K-OHM LEAKAGE	UNIGAUGE LOOPS 20K-OHM LEAKAGE*
—20 volts	2300 ohms	2200 ohms

*These ringing ranges are also valid with unigauge plant which may use an E6 repeater in each subscriber loop.

C. 415A KTU (Automatic, DC Signaling, Private Line Circuit)

2.19 The 415A KTU (Fig. 11) is a 4-inch, 18-contact unit for connecting a telephone set to a private line terminated at a distant location. Another 415A KTU, or other tie line KTU which will respond to a dc signal, is required at the distant location. The distant telephone set is automatically signaled when the line key on the local telephone set is operated and the handset is lifted. The 415A KTU provides a talking and signaling circuit with the ***same*** operating features as the 414A KTU and, in addition, provides:

- Optional lamp wink as an indication of hold

D. 416A KTU (Station Line Circuit)

2.20 The 416A KTU (Fig. 12) is a 4-inch, 20-contact unit for connecting a private line between a local telephone set and a telephone set at a distant location. A nonlocking key, in addition to the line pickup key at the local telephone set, is required to operate the audible signal at the distant station. The local station is signaled by lifting the handset and operating the line key associated with the set at the distant location. The 416A KTU provides a talking and signaling circuit with the following operating features.

- Visual lamp signal to indicate incoming call, or line busy.

- Choice of audible signals, common audible, steady, or interrupted.
- Audible ringback signal option.
- A spare relay contact is available for control.
- Line hold feature is ***not*** available.
- Ringing ranges with -20 volt battery supply on standard loops is 750 ohms.

E. 418A KTU (Short Range, DC Signaling, Private Line Circuit)

2.21 The 418A KTU (Fig. 13) is a 4-inch, 20-contact unit for connecting a private line between two telephone sets, usually on the same premises. A single KTU will serve two stations. The unit may be connected for one of three methods of signaling: two-way automatic, two-way manual, or automatic one-way and manual one-way. The 418A KTU provides a talking and signaling circuit and the following operating features.

- Flashing line lamp on an incoming call.
- Steady lamp indicating line busy.
- Choice of audible signals, common audible, steady or interrupted.
- Audible ringback signal option at both stations.
- Line hold feature is ***not*** available.
- Ringing range is 100 ohms with -20 volt battery supply.

F. 419-Type KTU (Automatic Signaing, Ringdown, Private Line Circuit)

2.22 The 419-type KTU (Fig. 14) is an 8-inch, 80-contact unit for connecting a telephone set over a private line to a distant location. Another 419-type KTU, or tie line KTU which will respond to and transmit ringing voltage, is required at the distant location. The distant telephone set is automatically signaled when the line key on the local telephone set is operated and the handset is lifted. The 419-type KTU provides a talking and signaling circuit with the following operating features.

- Pickup of a private line.
- Flashing line lamp on an incoming call.
- Steady lamp indicating line busy.
- Winking hold lamp.
- Choice of audible signals: common audible, steady, or interrupted.
- Audible ringback signal optional.
- Idle line termination when KTU is connected to lines using repeaters.
- Time-out on unanswered incoming calls; optional time-intervals.
- Hold-interrupt control to change status of 419-type KTU at a distant location from HOLD to Incoming Call (by switchhook flash).
- Ringing ranges are shown in Table J.

TABLE J
RINGING RANGES—419-TYPE KTU

MINIMUM RMS RINGING VOLTAGE	STANDARD LOOPS 15K-OHM LEAKAGE	UNIGAUGE LOOPS 20K-OHM LEAKAGE*
		OHMS
75, 84, 92 volts (20 Hz)	2600 ohms	4000 4600 5000
110, 120 volts (30 Hz)		5000 5400

*These ringing ranges are also valid with unigauge plant which may use an E6 repeater in each subscriber loop.

2.23 The 419B KTU is directly interchangeable with the 419A KTU (MD). The 419B KTU should be used in those installations where problems are encountered with false ringups due to line capacitance on long loops.

G. 461A KTU (Manual Signaling, Ringdown Private Line Circuit)

2.24 The 461A KTU (Fig. 15) is an 18-contact version of the 414A KTU. The spare contact available on the 414A has been eliminated and B ground used for RG. Another tie line circuit KTU is required at the distant location. A nonlocking key on the telephone set, or an externally mounted key in addition to the line pickup key, is required for signaling. The 461A KTU provides a talking and manual signaling circuit with the following operating features.

- Flashing line lamp on an incoming call.
- Steady lamp indicating line busy.
- Time-out on unanswered incoming calls; optional time intervals.
- Choice of audible signals: common audible, steady, or interrupted.
- Audible ringback signal option so calling party can hear a tone from the distant telephone.
- Idle line termination when KTU is connected to lines having repeaters.
- Line hold feature is ***not*** available.
- Ringing ranges are shown in Table K.

- **Line hold feature is *NOT* available.**
- Ringing ranges are shown in Table J.

NOTES:
1. REQUIRES A MOUNTING FACILITY EQUIPPED WITH AN 18-, 20-, OR 40-PIN CONNECTOR.
2. THE STATUS OF THE RELAYS FOR ALL FUNCTIONS OF THE KTU ARE AS FOLLOWS:

RELAY	FUNCTION		
	INCOMING RING CYCLE	ANSWERING OR INITIATING CALL	HOLD
A	R	O	R
B	O	R	O
C	R	O	O
L	O *	R	O

R= RELEASED O= OPERATE *= FOLLOWS RINGING

3. FOR 30 SECOND TIME-OUT CYCLE, REMOVE Z OPTION STRAP BETWEEN TERMINALS 1 AND 2.
4. TO PROVIDE TIME-OUT CYCLES OF RING-UP CIRCUITS FROM 3.4 TO 7.5 SECONDS, REPLACE Z OPTION STRAP WITH A KS-13490,L1 OR EQUIVALENT (1/2 WATT) RESISTOR. USE ONE RESISTOR LEAD AS A STRAP BETWEEN TERMINALS 1 AND 2 AND CONNECT THE OTHER LEAD TO TERMINAL 3. USE TABLE BELOW FOR RESISTOR VALUE REQUIRED FOR DESIRED TIME-OUT INTERVAL.

TIME IN SEC FROM 10 SEC TO:	RESISTOR MEGOHM	EFFECT ON DELAYED HOLD RELEASE OPTIONS	
		ZC	ZJ
7.5	1.2	NONE	NONE
6.7	.75	NOT RECOMMENDED (NOTE 5)	
5.0	.39		
3.4	.20		

IF THE TIME-OUT CYCLE IS REDUCED IN CONJUNCTION WITH ZC OR ZJ OPTION, CONNECT THE RESISTOR AND CAPACITOR AS SHOWN BELOW:

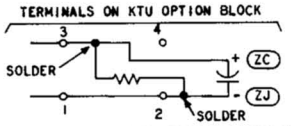

IF TIME-OUT CYCLE IS REDUCED, CONNECT RESISTOR AS SHOWN BELOW:

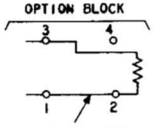

5. NO. 1 ESS SPECIAL LINE APPLIQUE CIRCUIT (SD-1A297) SHOULD BE USED IN APPLICATIONS WHERE ZC OPTION CANNOT BE APPLIED.
6. WHEN Z OPTION IS PROVIDED WITH ZC OR ZJ OPTIONS, REMOVE THE Z STRAP AND USE THE CAPACITOR LEAD AS A STRAP BETWEEN TERMINALS 1 AND 2.

OPTIONS

OPTION	FEATURES			OPTION BLOCK STRAPPING	
				400 A,B,C (MD)	400D (MD)
	TIME-OUT (NOTES 3 AND 4)	LONG TIME DELAY (APPROXIMATELY 30 SECONDS)			
Z		SHORT TIME DELAY (APPROXIMATELY 10 SECONDS)		1 TO 2	1 TO 2
Y	VISUAL HOLD CKT	LAMP WINK		8 TO 9	10 TO 7
X		LAMP STEADY		7 TO 9	9 TO 7
W	AUDIBLE SIGNAL	INTERRUPTED RING		5 TO 6	5 TO 8
T		STEADY RING		4 TO 6	6 TO 8
S		COMMON WITH DIODE MATRIX CONTROL		5 TO 6	5 TO 8
V		COMMON WITH RELAY CONTROL		3 TO 6	4 TO 8
ZC (NOTE 7)	DELAYED HOLD RELEASE	RELEASE OF HOLDING BRIDGE FROM CO OR PBX BY LINE CURRENT OPENS GREATER THAN	500 MILLISECONDS WHEN ASSOCIATED WITH ESS HAVING RESWITCH CAPABILITY * (USE 5 UF CAPACITOR, 601A OR EQUIVALENT) †(USE 1.62 UF CAPACITOR, 701G OR EQUIVALENT)	NOT USED	SEE 2.03
ZJ			50 MILLISECONDS WHEN ASSOCIATED WITH NO. 5 X-BAR CENTREX HAVING AUTOMATIC PERMANENT SIGNAL RELEASE * (USE 0.5 UF CAPACITOR, 575B OR EQUIVALENT) † (USE 0.162 UF CAPACITOR OR EQUIVALENT)		

* WHEN USED WITH Z OPTION
† WHEN USED WITH LONG TIME DELAY
‡ ONLY BARE WIRE STRAPS SHOULD BE USED ON KTUS MANUFACTURED PRIOR TO 1966

7. WHEN THE ZC OPTION IS USED DUE TO THE DELAYED RELEASE OF THE HOLDING BRIDGE, SOME TRANSMISSION LOSS IS ENCOUNTERED FOR APPROXIMATELY 1 SECOND WHEN A STATION REENTERS A HELD CALL.
8. V OPTION MAY BE USED IN LOCALLY ENGINEERED ARRANGEMENTS OR RELAY COMMON AUDIBLE ARRANGEMENTS.
9. ZD OPTION IS REPLACED BY ZJ OPTION, HOWEVER IT IS NOT NECESSARY TO UPDATE CIRCUITS PREVIOUSLY MODIFIED WITH OPTION ZD.

Fig. 3—Condensed Functional Schematic of 400-Type (Except 400G and H) KTU (CO or PBX Line Circuit) (Sheet 1 of 2)

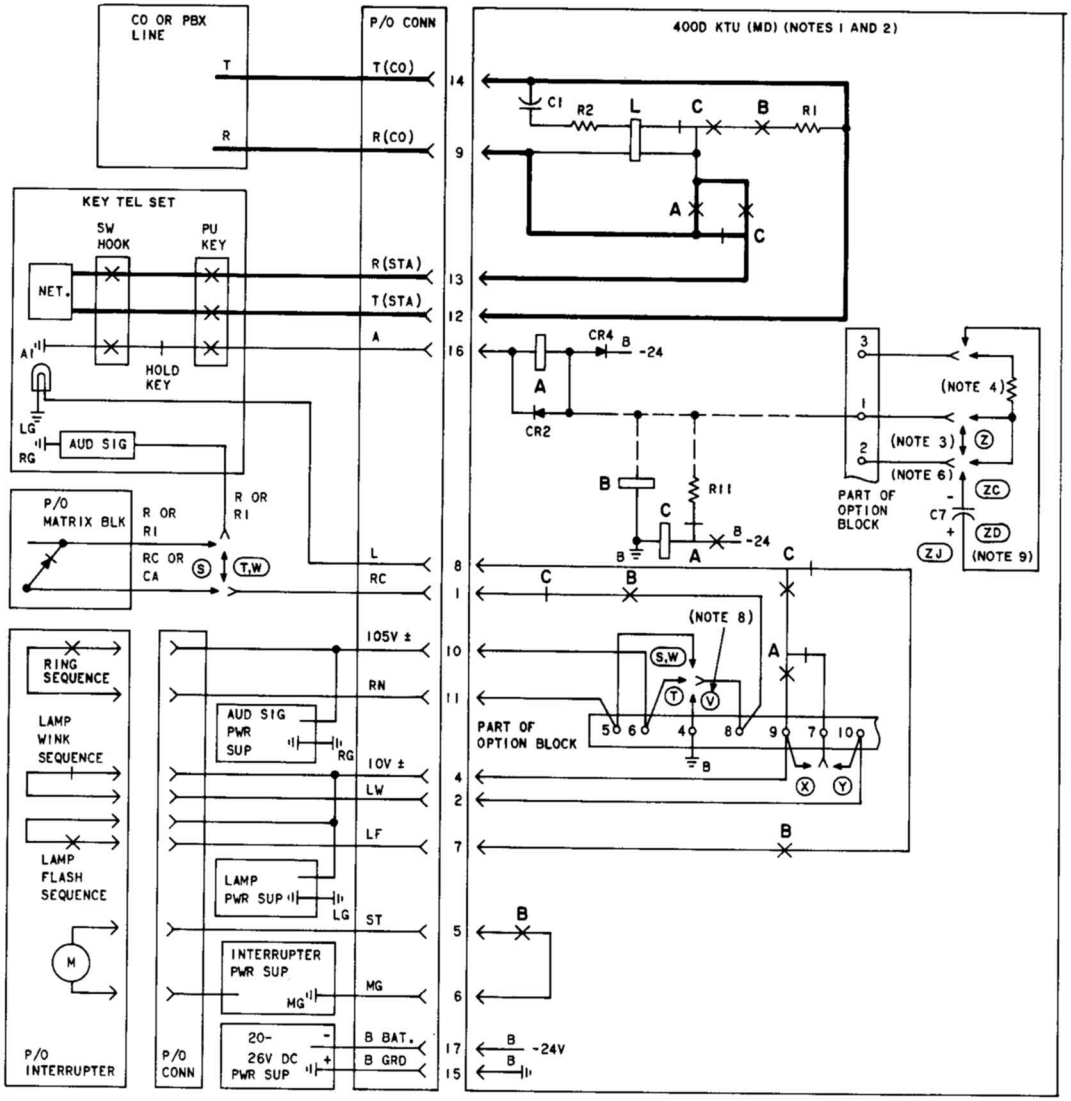

Fig. 3—Condensed Functional Schematic of 400-Type (Except 400G and H) KTU (CO or PBX Line Circuit) (Sheet 2 of 2)

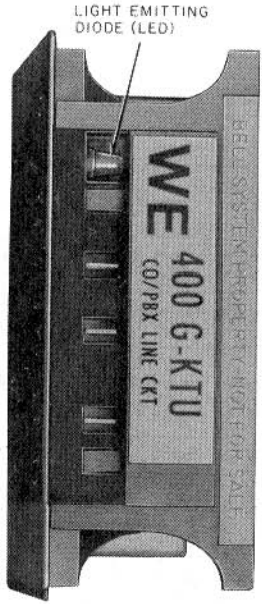

Fig. 4—Line Status Indicator in 400G KTU (MD)

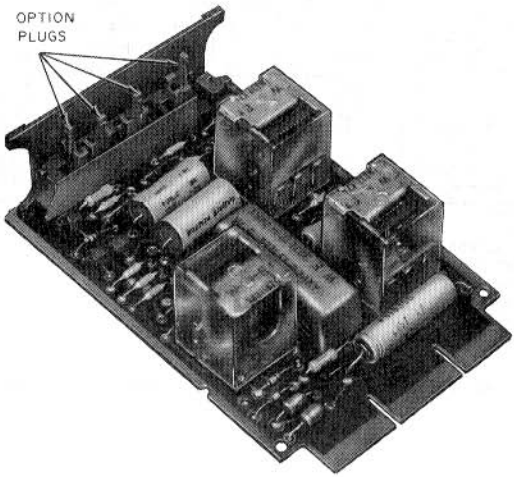

Fig. 5—400G KTU (MD)

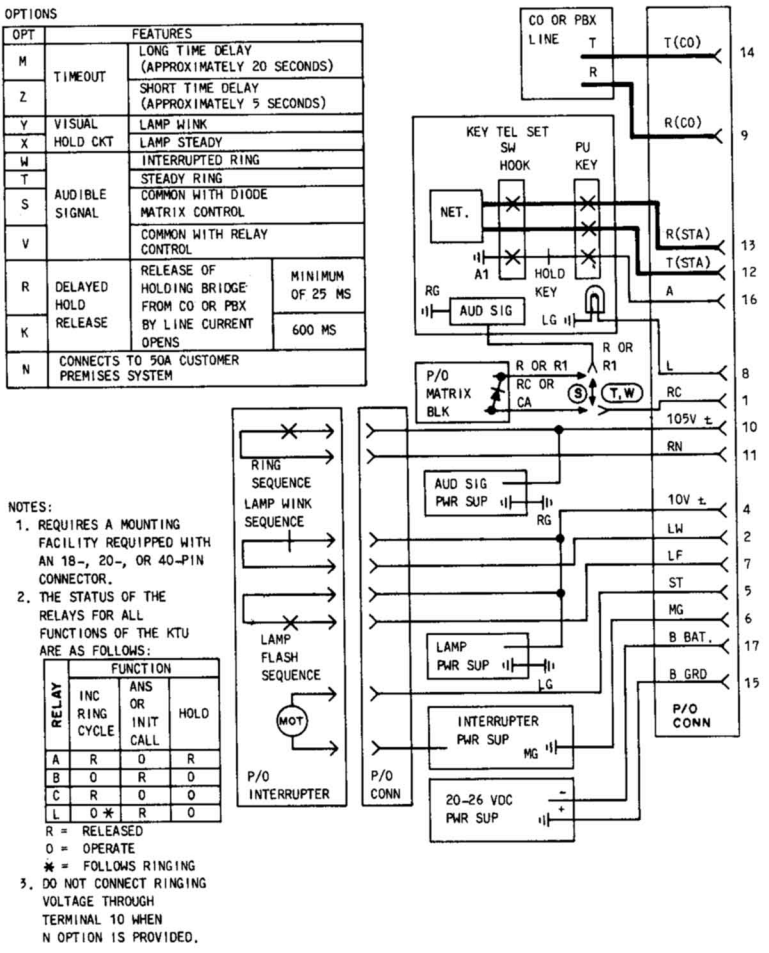

Fig. 6—Condensed Functional Schematic of 400G KTU (MD) (CO or PBX Line Circuit) (Sheet 1 of 2)

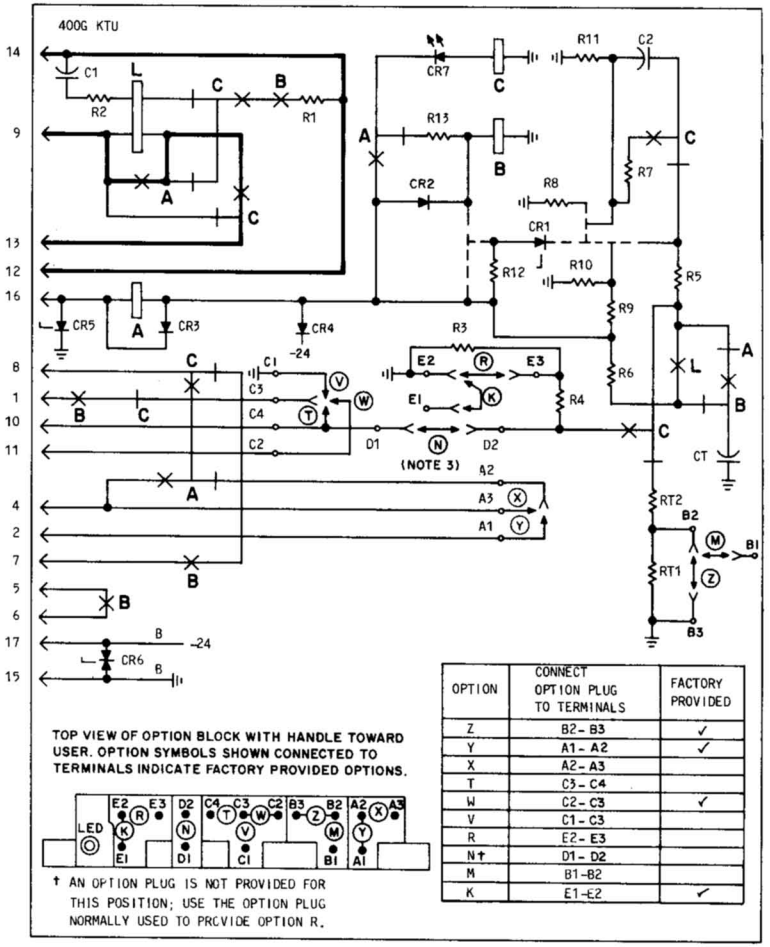

OPTION	CONNECT OPTION PLUG TO TERMINALS	FACTORY PROVIDED
Z	B2 - B3	✓
Y	A1 - A2	✓
X	A2 - A3	
T	C3 - C4	
W	C2 - C3	✓
V	C1 - C3	
R	E2 - E3	
N†	D1 - D2	
M	B1 - B2	
K	E1 - E2	✓

Fig. 6—Condensed Functional Schematic of 400G KTU (MD) (CO or PBX Line Circuit) (Sheet 2 of 2)

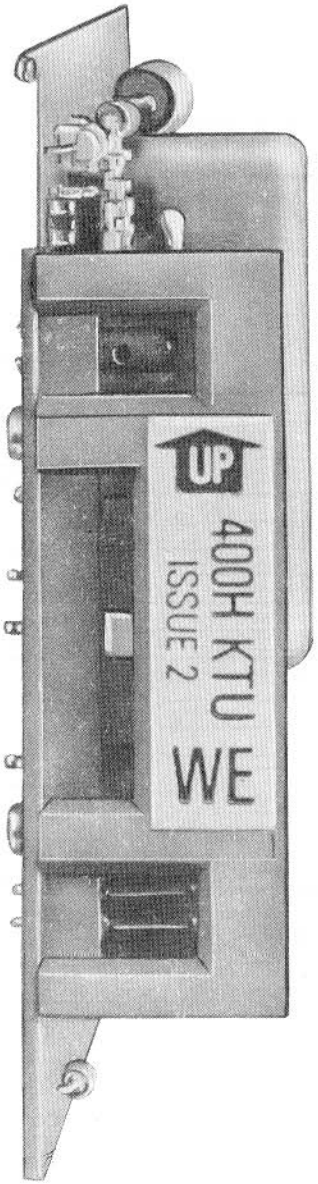

Fig. 7—Line Status Indicator and Test Pins in 400H KTU

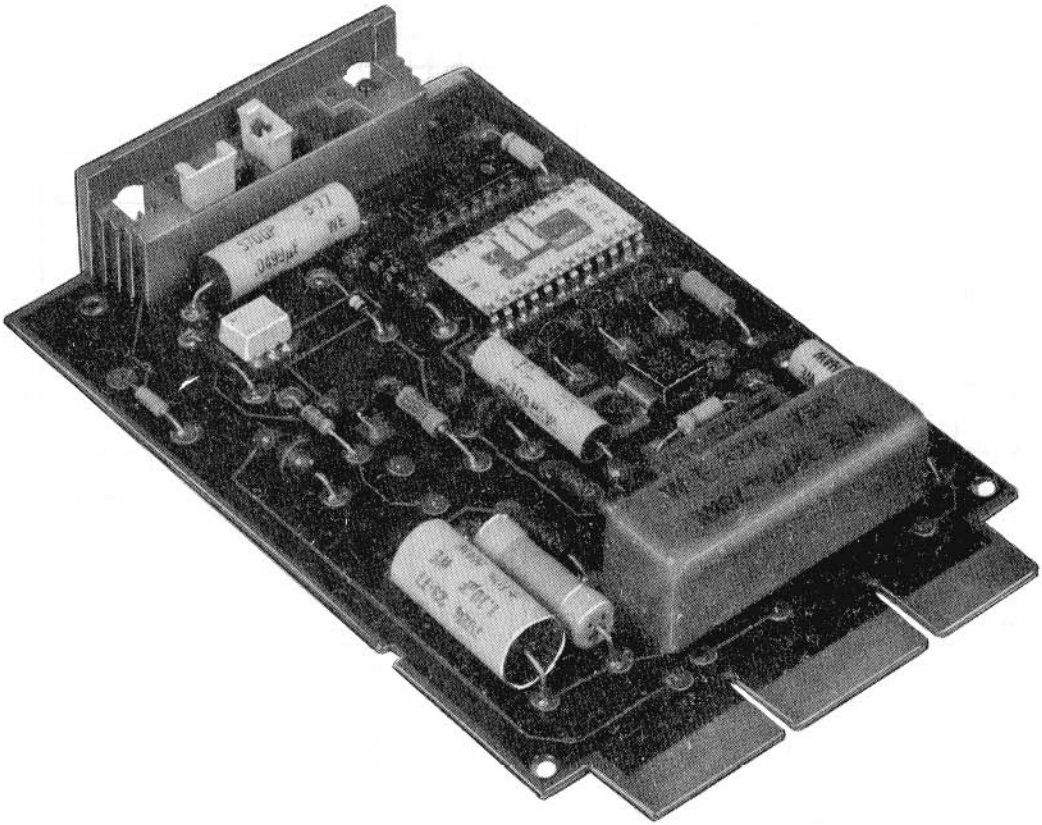

Fig. 8—400H KTU

OPTIONS

OPT	FEATURES		
T*	CO OR PBX LINE CIRCUIT		
W*	AUDIBLE SIGNAL	INTERRUPTED RING	
V		COMMON AUDIBLE WITH GROUND FOR RELAY CONTROL	
S*	HOLD CIRCUIT RELEASE	LONG HOLD ABANDON TIMEOUT (FOR ESS #1, ESS #2, 812 PBX, 770 PBX, DIMENSION PBX)	
R		SHORT HOLD ABANDON (FOR ALL OTHERS)	
Y †	TIME OUT	WITH	14 SECONDS
		WITHOUT	6 SECONDS

*FACTORY INSTALLLED

†AW OPTION PLUG IS NOT PROVIDED. USE KS21290, L7 OPTION PLUG COU CODE 841-732-613

NOTES:
1. REQUIRES A MOUNTING FACILITY EQUIPPED WITH AN 18-, 20-, OR 40-PIN CONNECTOR.
2. THE STATUS OF THE RELAYS FOR ALL FUNCTIONS OF THE KTU ARE AS FOLLOWS:
3. R109 AND Q105 PROVIDE ON ISSUE 2 OR LATER
4. T-OPTION ISSUE 1 ONLY. OPTION PLUGS J1 AND J2 HAVE BEEN REMOVED ON ISSUE 2 OR LATER
5. NOT PROVIDED ON ISSUE 2 OR LATER

RELAY	FUNCTION		
	INCOMING RING-CYCLE	ANSWERING OR INITIATING CALL	HOLD
R	0	RL	RL
H	RL	RL	0

RL - RELEASED
0 - OPERATED

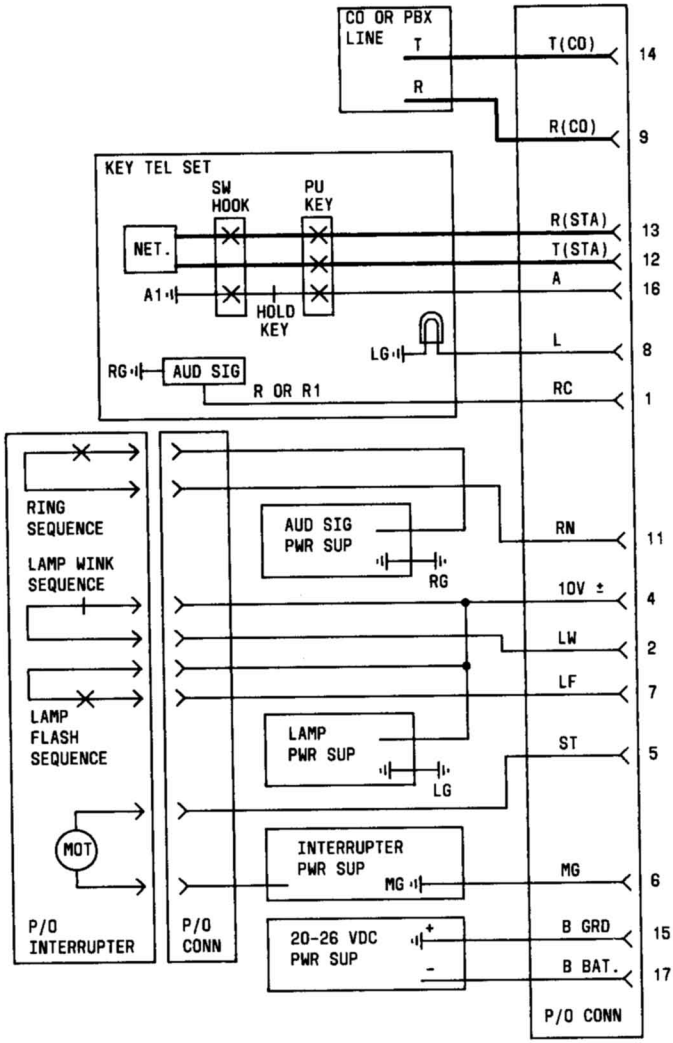

Fig. 9—Condensed Functional Schematic of 400H KTU (CO or PBX Line Circuit) (Sheet 1 of 2)

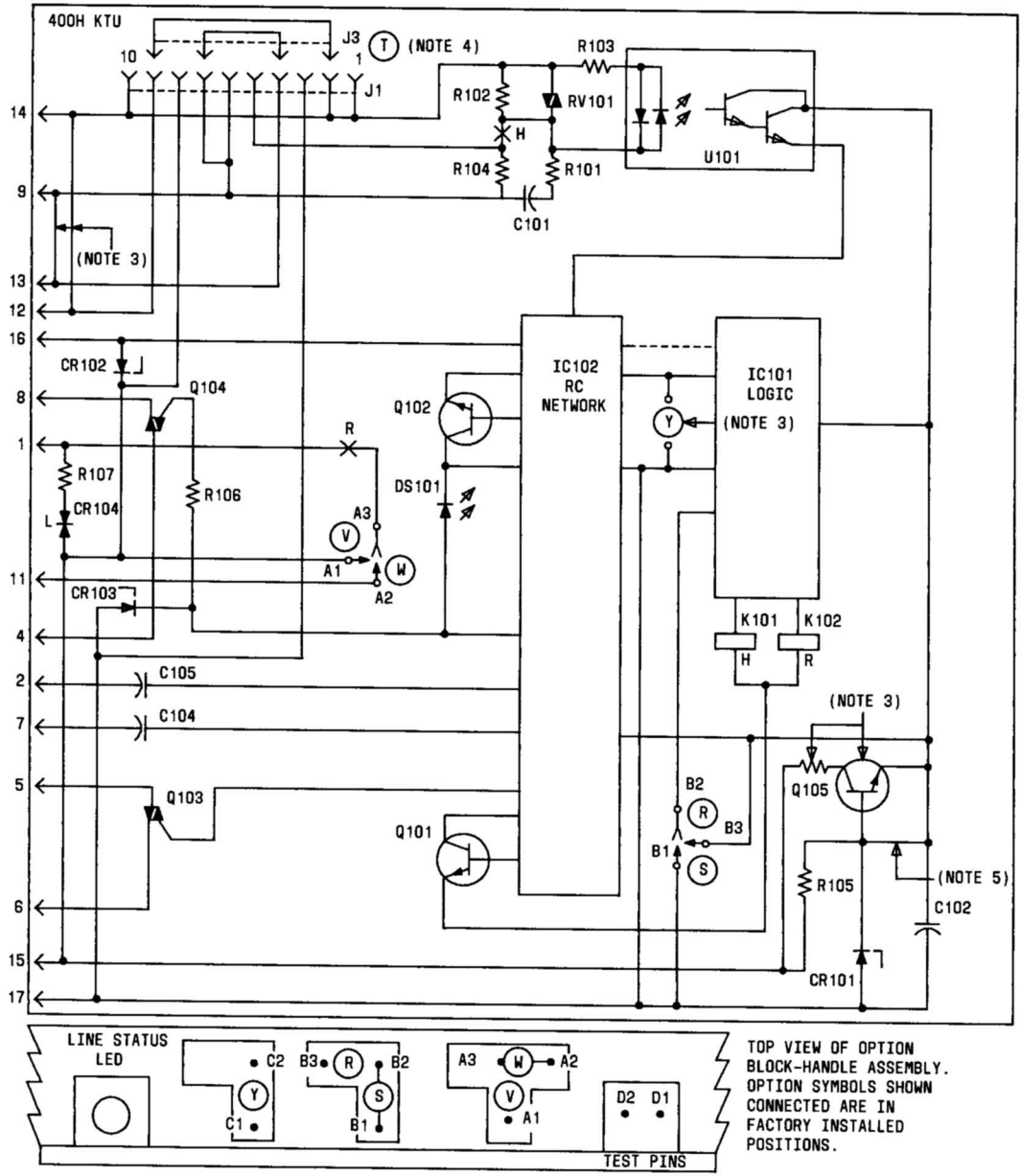

Fig. 9—Condensed Functional Schematic of 400H KTU (CO or PBX Line Circuit) (Sheet 2 of 2)

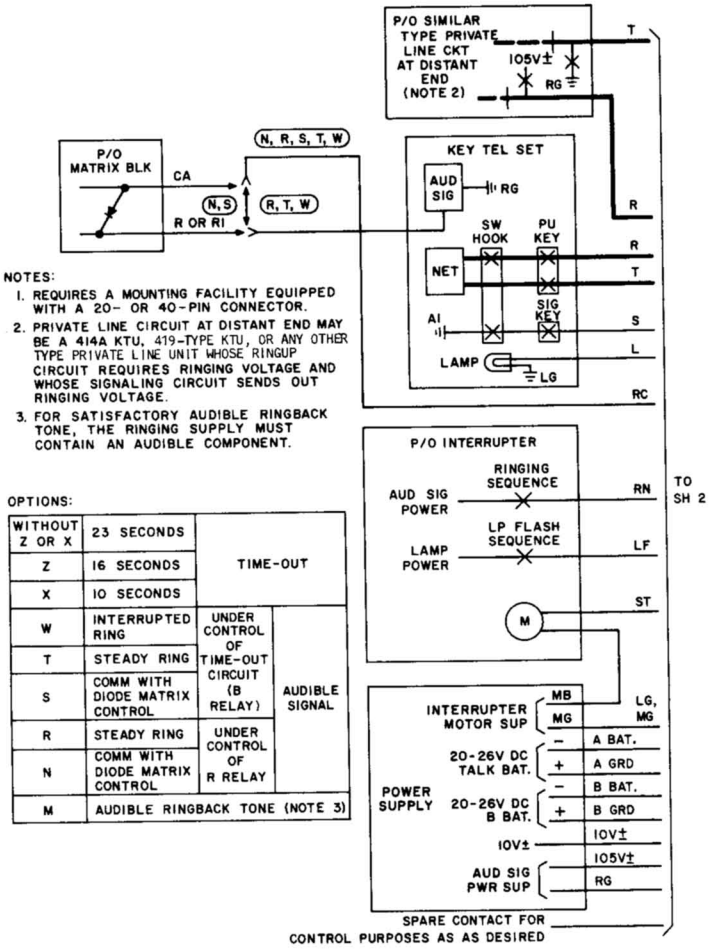

WITHOUT Z OR X	23 SECONDS	TIME-OUT	
Z	16 SECONDS		
X	10 SECONDS		
W	INTERRUPTED RING	UNDER CONTROL OF TIME-OUT CIRCUIT (B RELAY)	AUDIBLE SIGNAL
T	STEADY RING		
S	COMM WITH DIODE MATRIX CONTROL		
R	STEADY RING	UNDER CONTROL OF R RELAY	
N	COMM WITH DIODE MATRIX CONTROL		
M	AUDIBLE RINGBACK TONE (NOTE 3)		

Fig. 10—Condensed Functional Schematic of 414A KTU (Manual Signaling, Ringdown, Private Line Circuit) (Sheet 1 of 2)

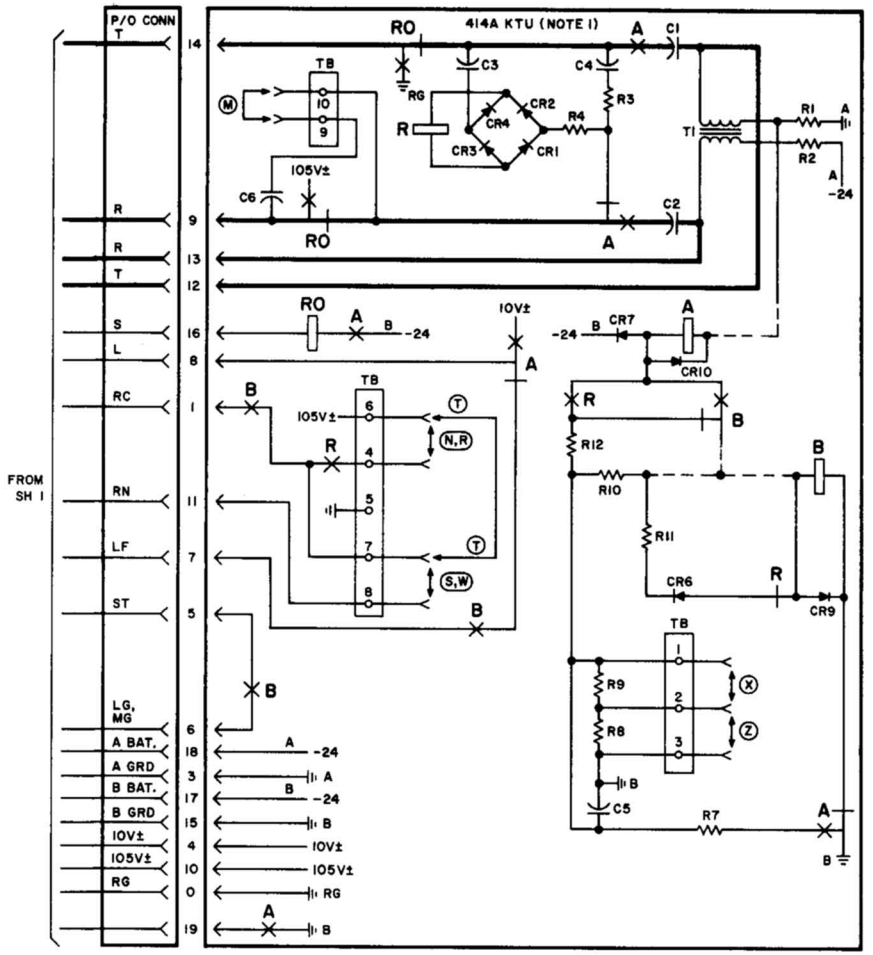

Fig. 10—Condensed Functional Schematic of 414A KTU (Manual Signaling, Ringdown, Private Line Circuit) (Sheet 2 of 2)

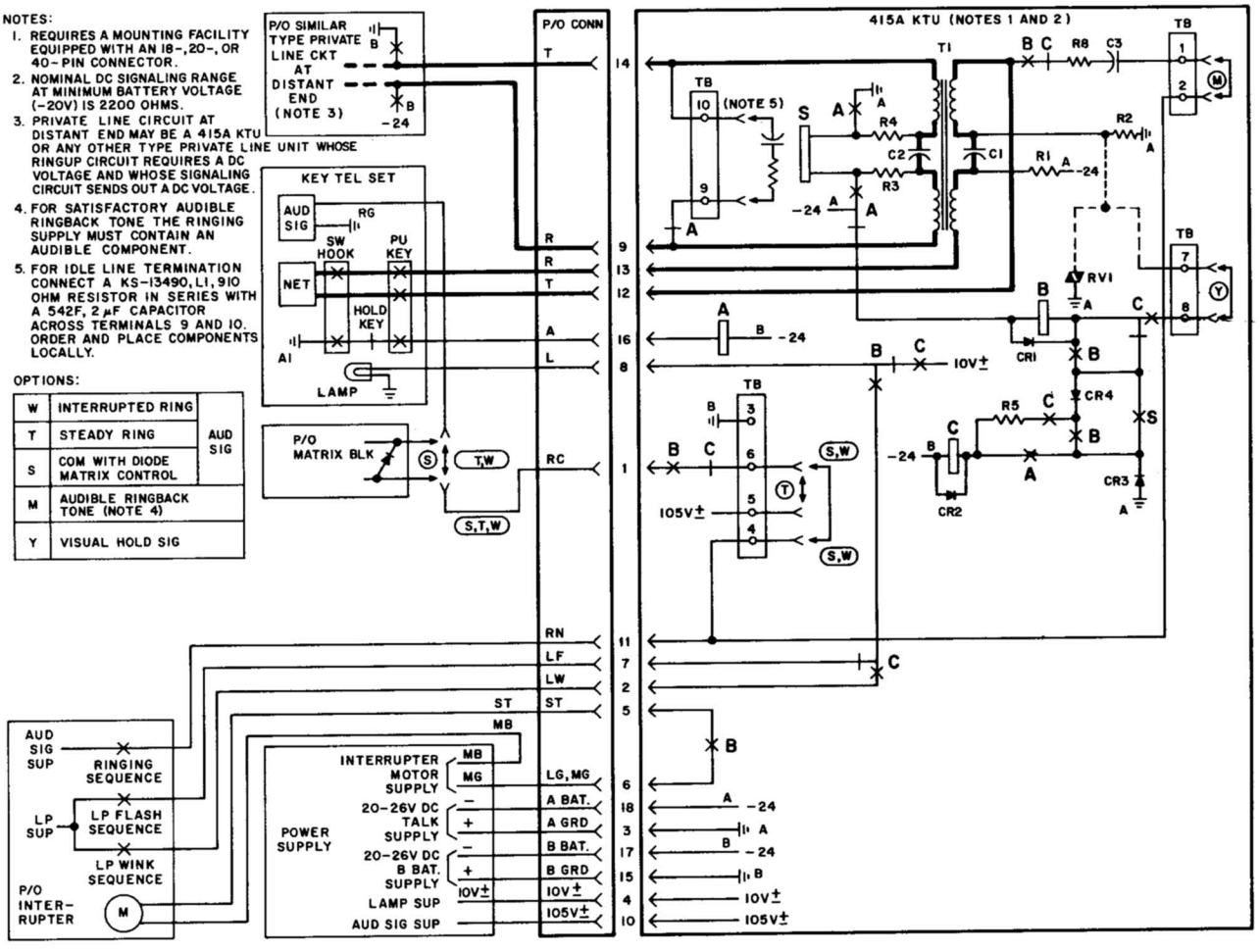

Fig. 11—Condensed Functional Schematic of 415A KTU (Automatic, DC Signaling, Private Line Circuit)

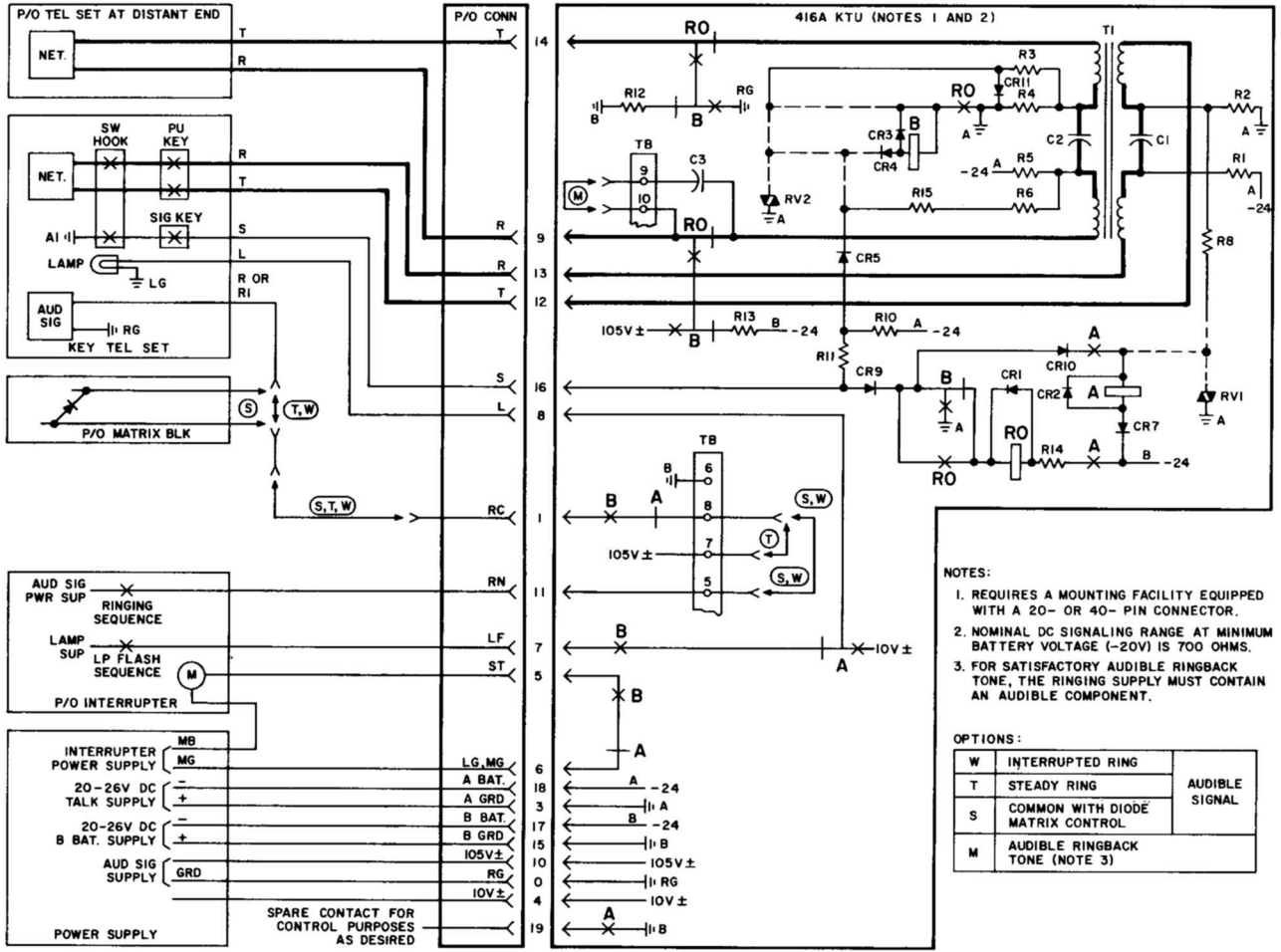

Fig. 12—Condensed Functional Schematic of 416A KTU (Station Line Circuit)

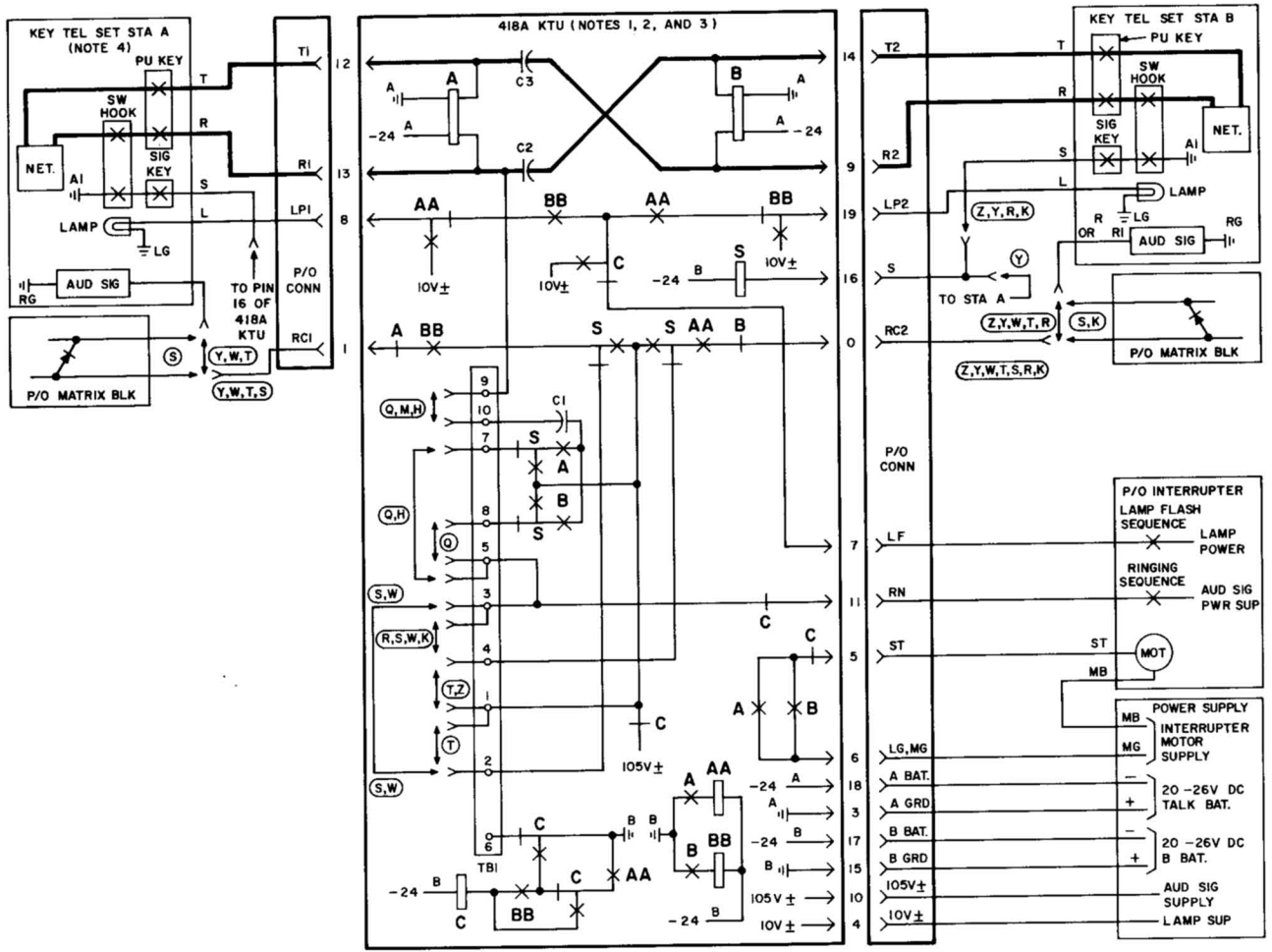

Fig. 13—Condensed Functional Schematic of 418A KTU (Short Range, DC Signaling, Private Line Circuit) (Sheet 1 of 2)

OPTIONS:

W	INTERRUPTED RING	TWO-WAY AUTOMATIC	SIGNALING
T	STEADY RING		
S	COM AUD WITH DIODE MATRIX CONTROL		
R	INTERRUPTED RING	ONE-WAY AUTOMATIC ONE-WAY MANUAL (NOTE 5)	
Z	STEADY RING		
K	COM AUD WITH DIODE MATRIX CONTROL		
Y	TWO-WAY MANUAL (NOTE 6)		
Q	TWO-WAY AUTOMATIC		AUDIBLE RINGBACK TONE (NOTE 7)
H	ONE-WAY AUTOMATIC, ONE-WAY MANUAL		
M	TWO-WAY MANUAL		

NOTES:

1. REQUIRES A MOUNTING FACILITY EQUIPPED WITH A 20- OR 40-PIN CONNECTOR.
2. FOR SATISFACTORY OPERATION OF RELAYS A AND B THE MAXIMUM DC RANGE IS 100 OHMS WITH A MINIMUM BATTERY VOLTAGE OF -20V. WHERE LAMPS ARE OPERATED FROM THE KTU WITHOUT AUXILIARY APPARATUS, THE NORMAL 50-OHM LOOP RANGE APPLIES.
3. THE CONTINUOUS METHOD OF STRAPPING MUST BE USED ON TBI FOR OPTIONS REQUIRING STRAPS BETWEEN 3 TERMINALS. FOR EXAMPLE S,W OPTION WOULD BE WIRED FROM 2, THRU 3, TO 4 AS FOLLOWS:

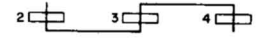

4. STATION "A" IS ALWAYS ASSIGNED AS THE AUTOMATIC SIGNALING STATION WHENEVER THE ONE-WAY AUTOMATIC, ONE-WAY MANUAL SIGNALING OPTION IS USED.
5. THESE OPTIONS APPLY TO THE SIGNAL KEY AND AUDIBLE SIGNAL AT STA "B" ONLY. THE AUDIBLE SIGNAL AT STA "A" IS UNDER CONTROL OF RELAY "S". THE AUDIBLE SIGNAL AT STA "A" MAY BE PART OF A COMMON AUDIBLE ARRANGEMENT PROVIDED THE DIODE MATRIX IS USED FOR CONTROL.
6. THE AUDIBLE SIGNALS AT STA "A" AND "B" MAY BE PART OF A COMM AUDIBLE ARRANGEMENT PROVIDED THE DIODE MATRIX IS USED FOR CONTROL.
7. FOR SATISFACTORY AUDIBLE RINGBACK TONE THE RINGING SUPPLY MUST CONTAIN AN AUDIBLE COMPONENT.

Fig. 13—Condensed Functional Schematic of 418A KTU (Short Range, DC Signaling, Private Line Circuit) (Sheet 2 of 2)

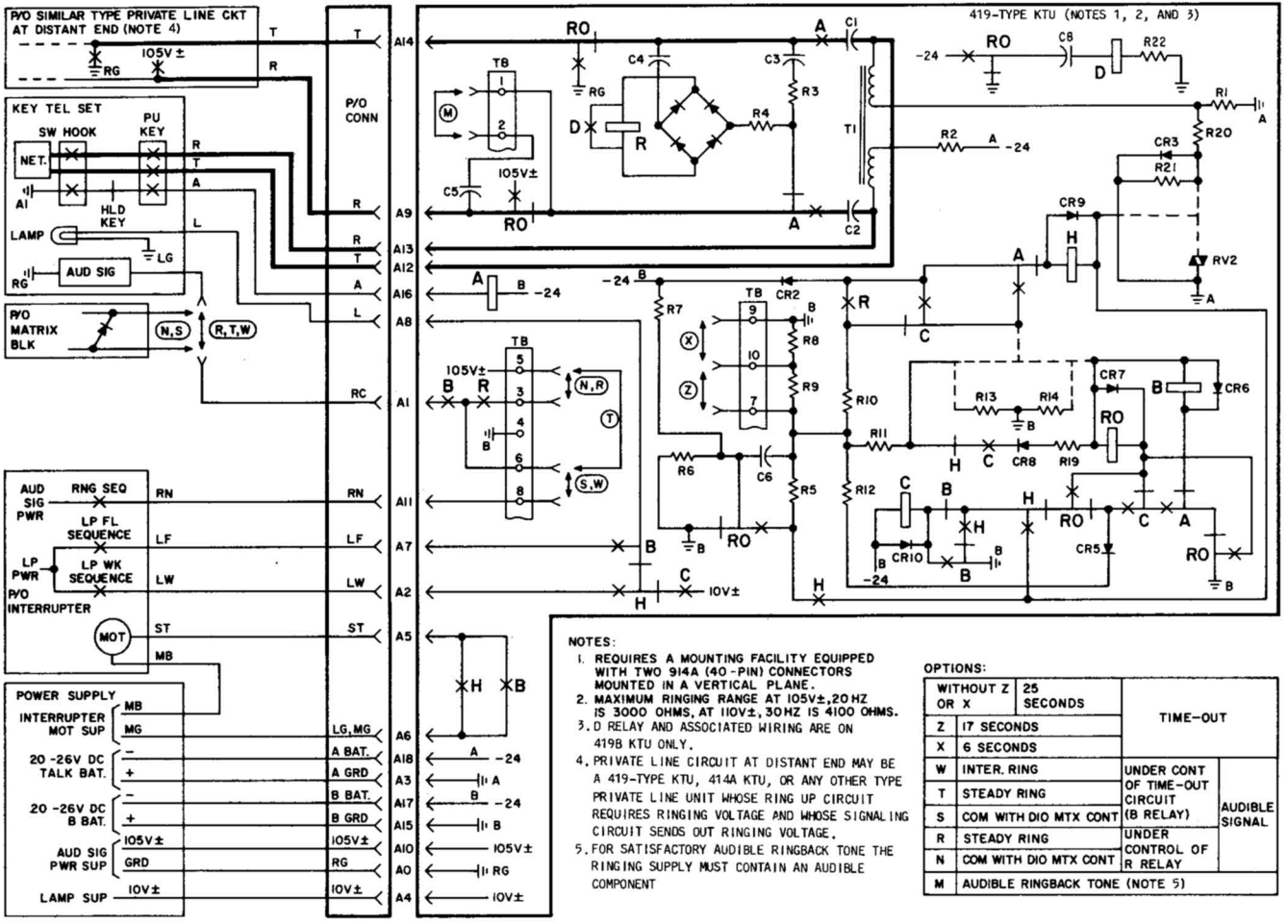

NOTES:

1. REQUIRES A MOUNTING FACILITY EQUIPPED WITH TWO 914A (40-PIN) CONNECTORS MOUNTED IN A VERTICAL PLANE.
2. MAXIMUM RINGING RANGE AT 105V±,20HZ IS 3000 OHMS, AT 110V±,30HZ IS 4100 OHMS.
3. D RELAY AND ASSOCIATED WIRING ARE ON 419B KTU ONLY.
4. PRIVATE LINE CIRCUIT AT DISTANT END MAY BE A 419-TYPE KTU, 414A KTU, OR ANY OTHER TYPE PRIVATE LINE UNIT WHOSE RING UP CIRCUIT REQUIRES RINGING VOLTAGE AND WHOSE SIGNALING CIRCUIT SENDS OUT RINGING VOLTAGE.
5. FOR SATISFACTORY AUDIBLE RINGBACK TONE THE RINGING SUPPLY MUST CONTAIN AN AUDIBLE COMPONENT

OPTIONS:

WITHOUT Z OR X	25 SECONDS	TIME-OUT	
Z	17 SECONDS		
X	6 SECONDS		
W	INTER. RING	UNDER CONT OF TIME-OUT CIRCUIT (B RELAY)	AUDIBLE SIGNAL
T	STEADY RING		
S	COM WITH DIO MTX CONT		
R	STEADY RING	UNDER CONTROL OF R RELAY	
N	COM WITH DIO MTX CONT		
M	AUDIBLE RINGBACK TONE (NOTE 5)		

Fig. 14—Condensed Functional Schematic of 419-Type KTU (Automatic Signaling, Ringdown, Private Line Circuit)

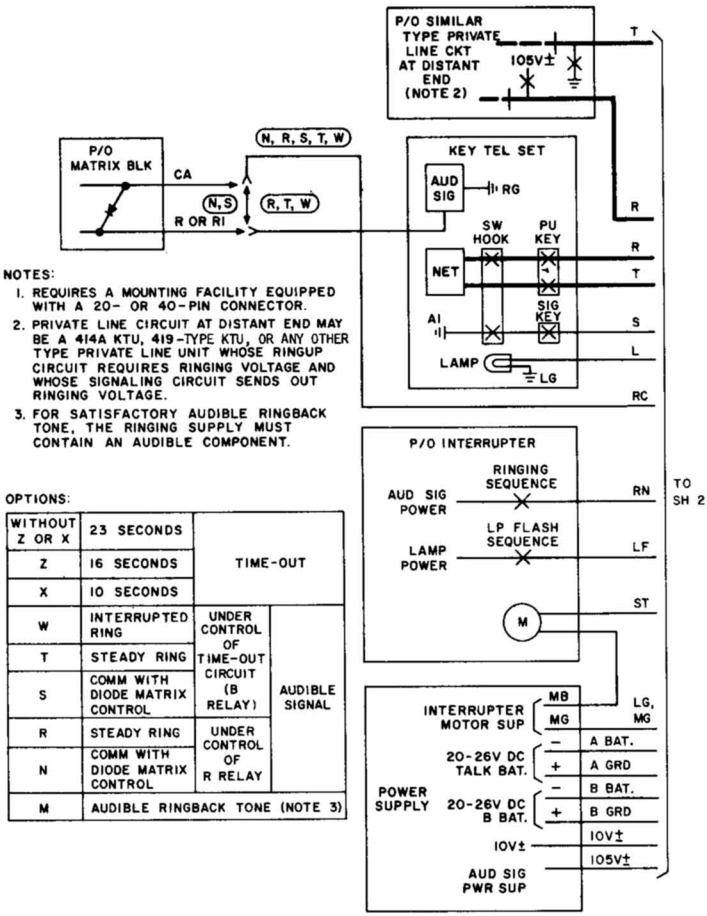

Fig. 15—Condensed Functional Schematic of 461A KTU (Manual Signaling, Ringdown, Private Line Circuit) (Sheet 1 of 2)

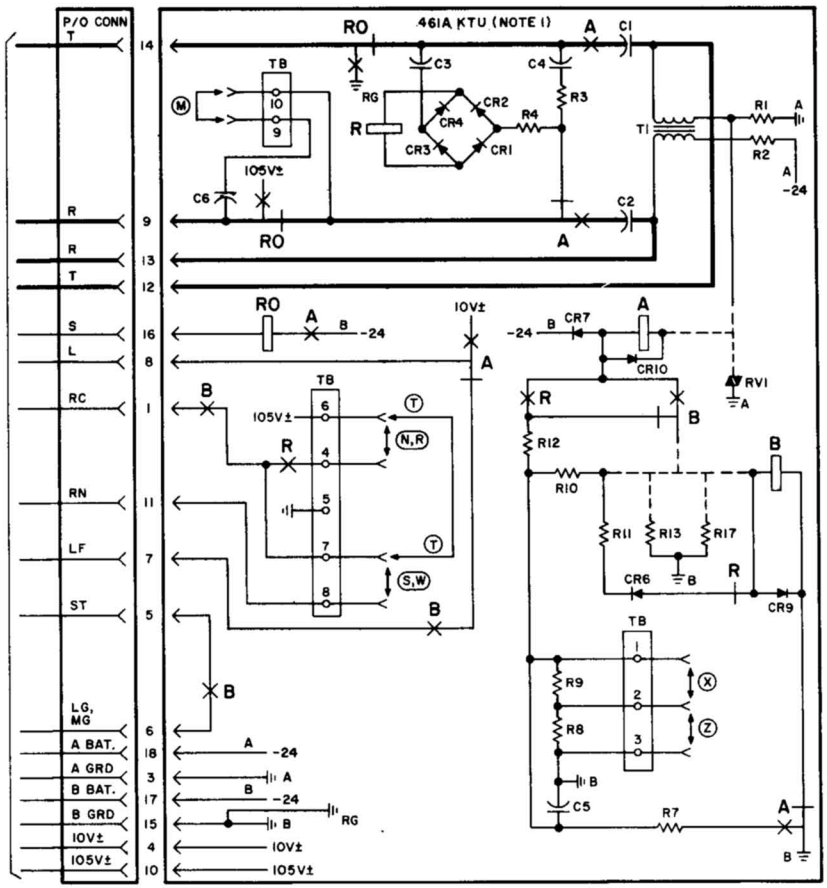

Fig. 15—Condensed Functional Schematic of 461A KTU (Manual Signaling, Ringdown, Private Line Circuit) (Sheet 2 of 2)

TABLE K
RINGING RANGES—461A KTU

MINIMUM RMS RINGING VOLTAGE	STANDARD LOOPS 15K-OHM LEAKAGE	UNIGAUGE LOOPS 20K-OHM LEAKAGE*
		OHMS
75 } volts (20 Hz)	2600 ohms	4000
84 } volts (20 Hz)		4600
92 } volts (20 Hz)		5000
110 } volts (30 Hz)		5000
120 } volts (30 Hz)		5400

*These ringing ranges are also valid with unigauge plant which may use an E6 repeater in each subscriber loop.

SERVICE

1A2 KEY TELEPHONE SYSTEM

KEY TELEPHONE UNITS

AUXILIARY LINE SERVICES

1. GENENAL

1.001 This addendum supplements Section 518-215-401, Issue 3. Place this pink sheet ahead of Page 1 of the section.

1.002 This addendum is issued to add:

- Information pertaining to the Federal Communications Commission's (FCC) Registration Program
- 429C KTU.

2. CHANGES TO SECTION

2.001 On Page 2, following paragraph 1.08, add the following:

1.09 After January 1, 1980, connection of customer-provided equipment (CPE) or telephone company-provided equipment to the 1A2 Key Telephone System (KTS) requires the use of a 33B voice coupler when providing music-on-hold. Also after January 1, 1980, the 471C and 479C key telephone units (KTUs) must be used when providing their related services. Previously connected or Class C voice couplers and KTUs may be used for additions and maintenance at grandfathered installations for the life of the equipment, provided they are not modified. Class C stock may also be used in new installations after January 1, 1980.

1.10 Incoming central office (CO) lines to be installed in compliance with the FCC Registration Program must be routed through a standard network interface. Information on approved interfaces is contained in Sections 463-400-100 through 463-400-150.

2.002 On Page 7, following paragraph 2.08, add the following:

2.08.1 The 429C KTU is the same as the 429B KTU which it replaces, except for the addition of components to assure release from "I Hold" by a noninitiating station.

NOTICE
Not for use or disclosure outside the
Bell System except under written agreement

SERVICE

1A2 KEY TELEPHONE SYSTEM

KEY TELEPHONE UNITS

AUXILIARY LINE SERVICES

1. GENERAL

1.01 This section provides schematic information for the 400-series KTUs which provide services auxiliary to Central Office (CO), Private Branch Exchange (PBX), or private line services.

1.02 This section is reissued to add information on the 471B, 479B, and 498A KTUs and the 116A1 circuit module (CM).

1.03 The auxiliary service KTUs covered in this section provide operating features in addition to those provided by the line service units. These features include:

- Conference arrangements—417A KTU
- Multiline exclusion—405A (MD) or 428A KTU
- Supplemental hold arrangements—406A (MD), or 429A (MD) and 429B KTU
- Music-on-hold—451B ▶and 498A◀ KTU
- Toll restriction—471A, ▶471B,◀ or 479A, ▶479B◀ KTU

Information on line services is covered in 518-215-400; intercom services and associated features, 518-215-402; control circuits including audible signals, 518-215-403.

Mechanical

1.04 All circuit components on these KTUs are mounted on a plug-in printed wiring board, one end of which is equipped with contacts. A 4-inch board may have 18-, 20-, or 40-contacts; an 8-inch board will have 80 contacts (requiring two vertical 40-pin connectors). The circuit boards plug into mating connectors in key service units, panels, or apparatus mountings. Wiring from the connectors will be dedicated or nondedicated leads. Dedicated leads are those that normally appear on the same contacts of all KTUs, such as supply voltages and grounds, and are normally factory-wired. Nondedicated leads are those whose designation and function vary and are made available for installer connections. Fig. 1 and 2 show typical 4- and 8-inch KTUs.

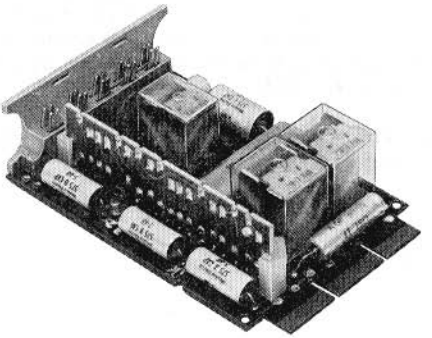

Fig. 1—Typical 4-Inch Key Telephone Unit

Electrical

1.05 Functional schematics (Fig. 3 through 14) cover the basic circuitry of each KTU, contacts used, and its relationship to telephone sets, other KTUs, power supplies, and apparatus. Dashed lines are used to simplify the schematics and to indicate intermediate circuitry. If full

NOTICE
Not for use or disclosure outside the
Bell System except under written agreement

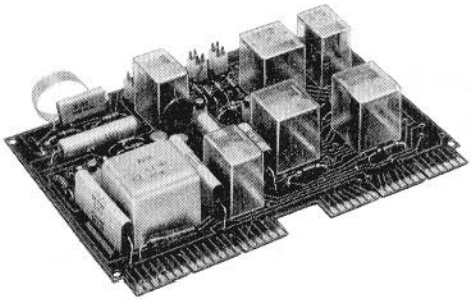

Fig. 2—Typical 8-Inch Key Telephone Unit

schematics are required, refer to the SDs listed in 1.08.

1.06 Voltages required for operation of the KTU, or provided to associated apparatus by the KTU, are shown with their connector pins. Other voltages may appear on the contacts of the mating connector, depending on the mounting arrangement, but not on the KTU.

1.07 KTUs may require the following power supply voltages and their associated grounds.

- -24V (B battery) for control
- -24V (A battery) for talk
- ±10V for visual signals
- ±105V for audible signals

1.08 This issue of the section is based on the following drawings:

SD-69489-01, Issue 5—405A and 428A KTU

SD-69530-01, Issue 6—406A, 408A, 429A, 429B, and 430A KTU

SD-69561-01, Issue 2—417A KTU

SD-69590-01, Issue 2—421A KTU

♦SD-69922-01, Issue 2—451B, 498A KTU and 116A1 CM♦

SD-69921-01, Issue 1—471- and 479-type KTUs

If this section is to be used with equipment or apparatus reflecting later issues of the drawings, reference should be made to the CDs and SDs to determine the extent of the changes and the manner in which the section may be affected.

2. IDENTIFICATION

405A (MD) KTU (Multiline Exclusion Circuit)

2.01 The 405A (MD) KTU (Fig. 3) is a 4-inch, 20-contact unit which must be used with a 259B or 272A KTU. The 405A KTU has been replaced by the 428A KTU (see 2.06 for features) which conforms to standard contact lead configuration.

> ***Note:*** A 405A (MD) KTU cannot be used in the 513-, 514- or 515-type KSUs, 597- or 598-type panels, or 69-type apparatus mountings.

406A (MD) KTU (Supplementary Hold Detector Circuit)

2.02 The 406A (MD) KTU (Fig. 4) is a 4-inch, 18-contact unit which must be used with a 259B or 272A KTU. The 406A KTU has been replaced by the 429A KTU (see 2.09 for features) which conforms to standard contact lead configuration.

> ***Note:*** A 406A (MD) KTU cannot be used in the 513-, 514- or 515-type KSUs, 597- or 598-type panels, or 69-type apparatus mountings.

408A (MD) KTU (Flutter Generator Circuit)

2.03 The 408A (MD) KTU (Fig. 5) is a 4-inch, 18-contact unit which must be used with a 259B or 272A KTU. The 408A KTU has been replaced by the 430A KTU (see 2.09 for features) which conforms to standard contact lead configuration.

> ***Note:*** A 408A (MD) KTU cannot be used in the 513-, 514- or 515-type KSUs, 597- or 598-type panels, or 69-type apparatus mountings.

417A KTU (Add-on Conference Circuit)

2.04 The 417A KTU (Fig. 6) is a 4-inch, 40-contact unit that provides for bridging of two lines for a 3-way conference in the following arrangements:

(a) A CO line and a PBX line

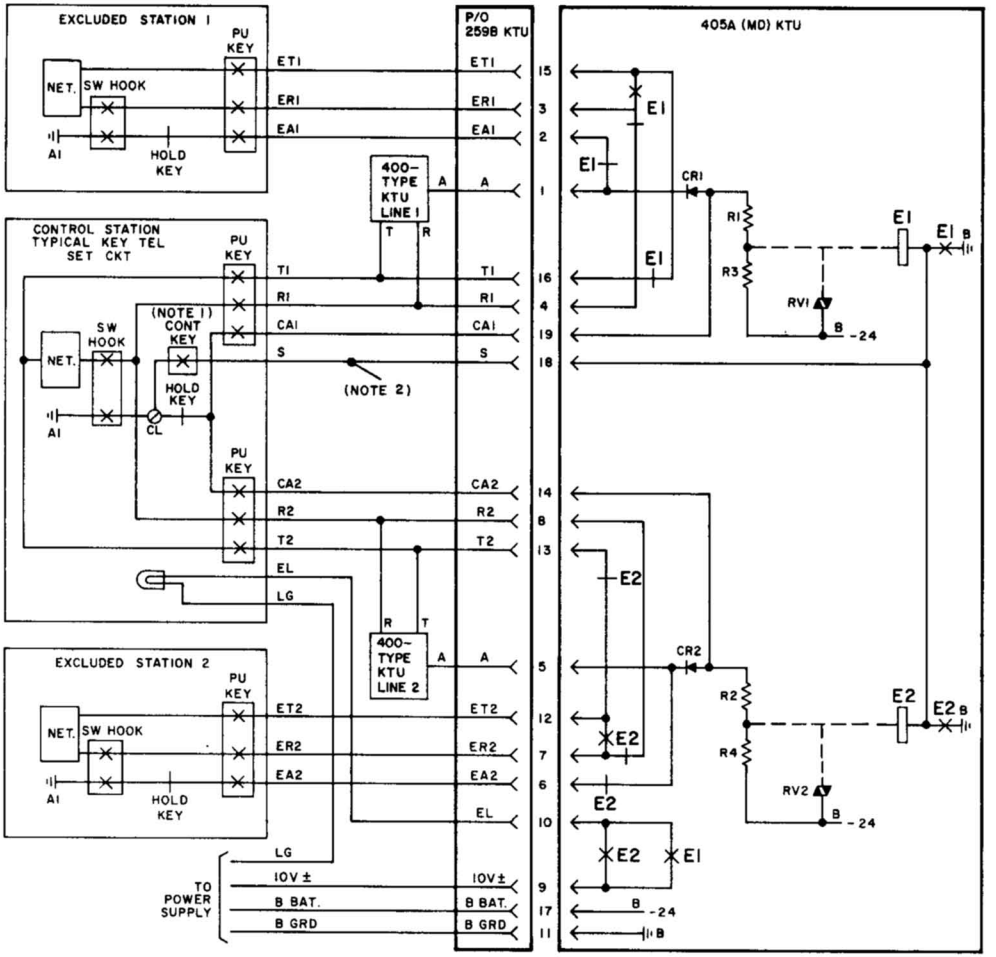

NOTES:

1. CONTROL KEY MAY BE LOCKING OR NONLOCKING.
2. "S" LEAD CAN ONLY MULTIPLE TO OTHER 405A KTUS CONTROLLED BY THE SAME STATION.

Fig. 3—Condensed Functional Schematic of 405A (MD) KTU (Multiline Exclusion Circuit)

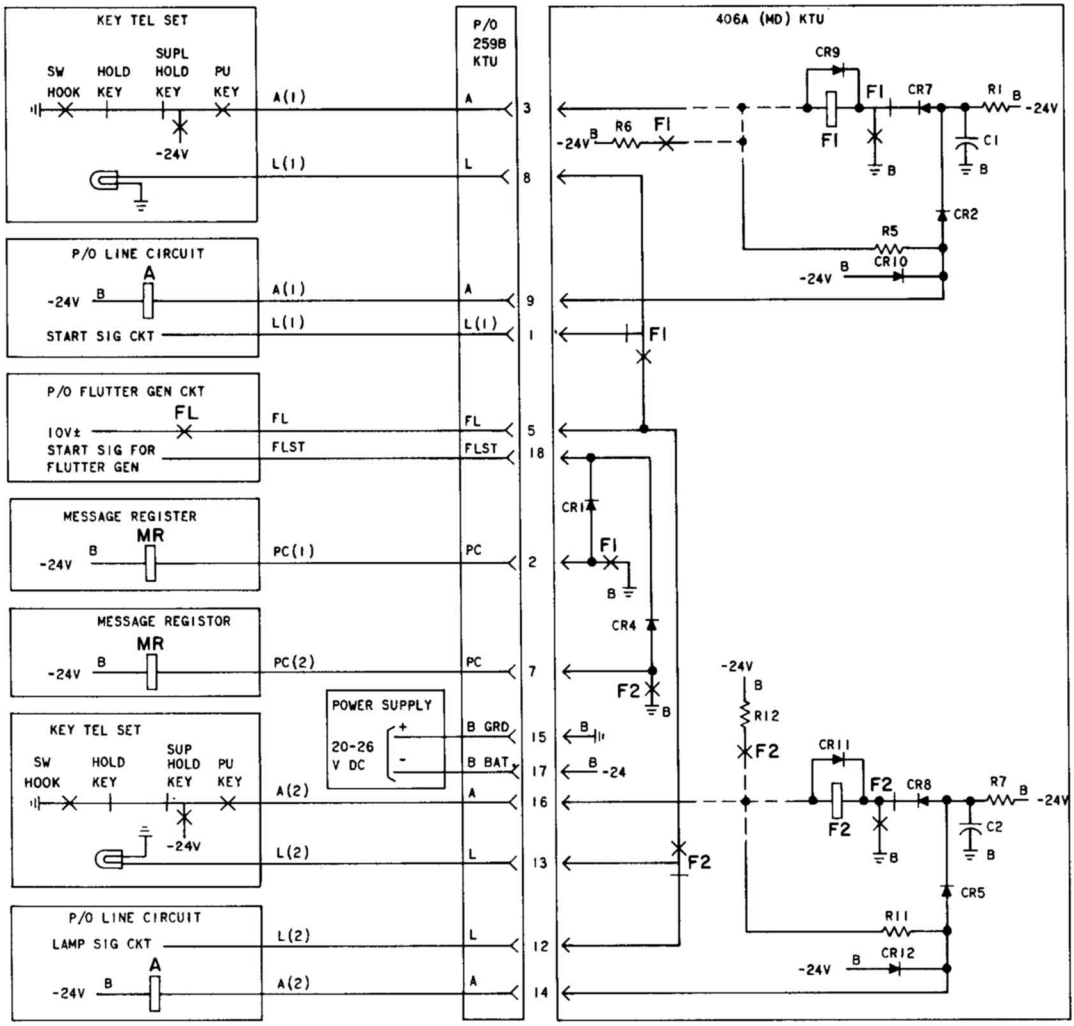

Fig. 4—Condensed Functional Schematic of 406A (MD) KTU (Supplementary Hold Detector Circuit)

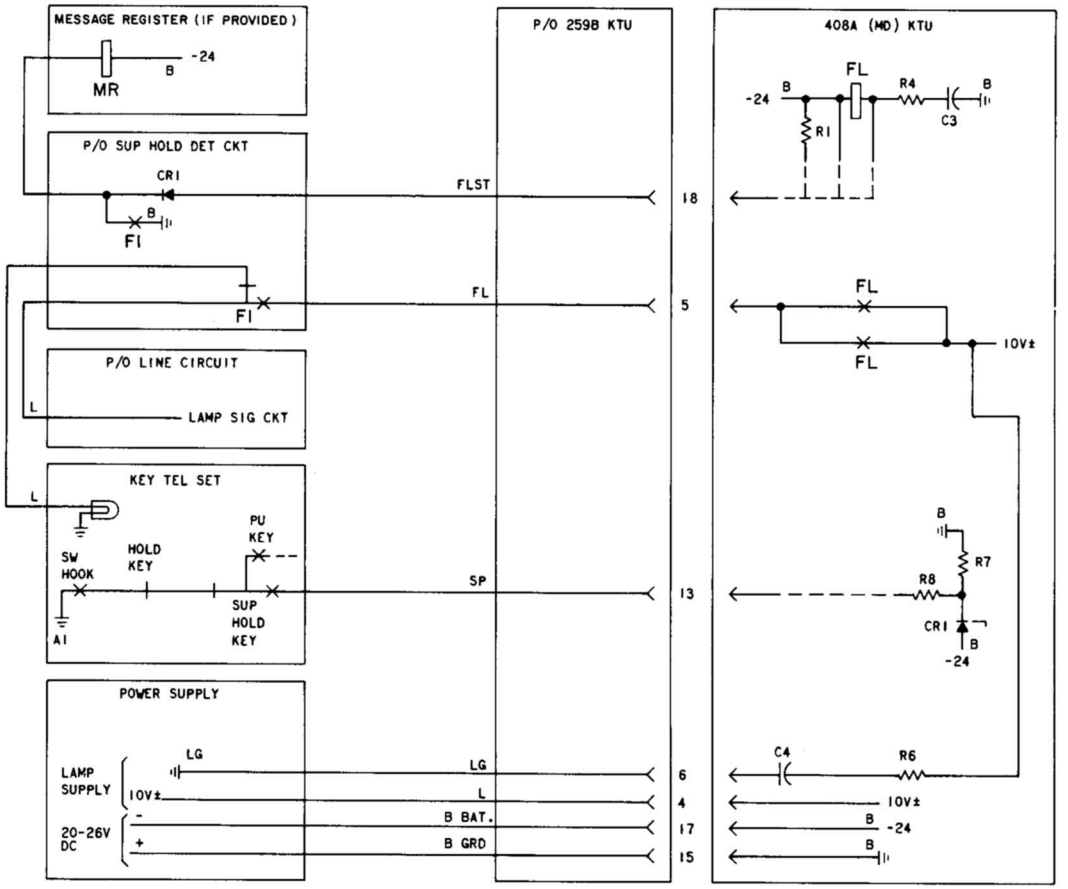

Fig. 5—Condensed Functional Schematic of 408A (MD) KTU (Flutter Generator Circuit)

(b) Two PBX lines or two CO lines

(c) A CO or PBX line and an intercom line.

The 417A KTU has the following features:

- Circuit can be operated by exclusion switch, external nonlocking key, or converted line pickup key.
- Circuit busy lamp when line pickup key is used.
- Control station can leave conference by placing line on hold and remaining off-hook, allowing other parties to continue conversation without transmission loss.
- Circuit may be controlled by two stations when diode protection is locally furnished.
- Either control station can disconnect from conference leaving two parties to continue conference.
- Compatible with speakerphone.

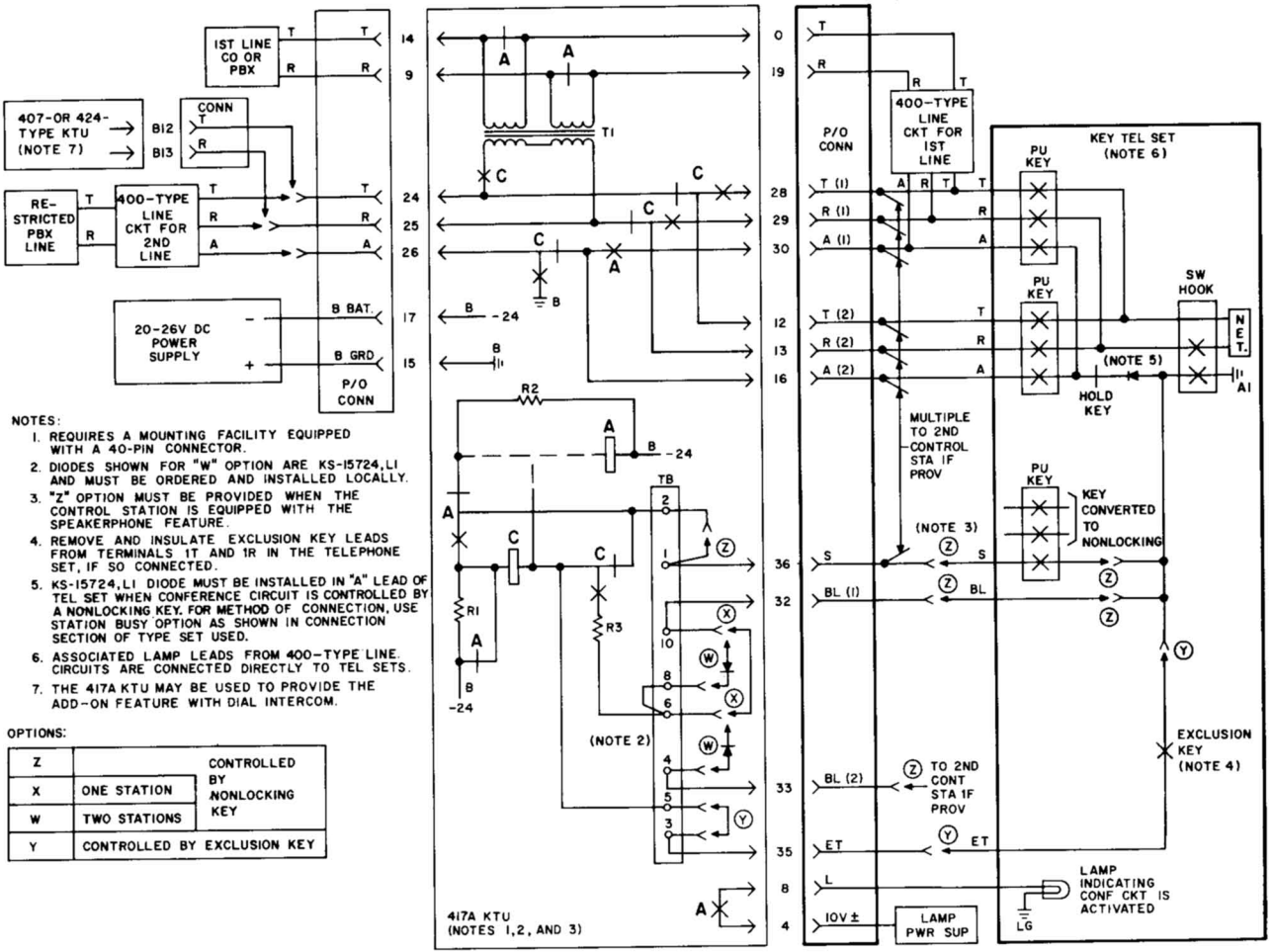

NOTES:

1. REQUIRES A MOUNTING FACILITY EQUIPPED WITH A 40-PIN CONNECTOR.
2. DIODES SHOWN FOR "W" OPTION ARE KS-15724,L1 AND MUST BE ORDERED AND INSTALLED LOCALLY.
3. "Z" OPTION MUST BE PROVIDED WHEN THE CONTROL STATION IS EQUIPPED WITH THE SPEAKERPHONE FEATURE.
4. REMOVE AND INSULATE EXCLUSION KEY LEADS FROM TERMINALS 1T AND 1R IN THE TELEPHONE SET, IF SO CONNECTED.
5. KS-15724,L1 DIODE MUST BE INSTALLED IN "A" LEAD OF TEL SET WHEN CONFERENCE CIRCUIT IS CONTROLLED BY A NONLOCKING KEY. FOR METHOD OF CONNECTION, USE STATION BUSY OPTION AS SHOWN IN CONNECTION SECTION OF TYPE SET USED.
6. ASSOCIATED LAMP LEADS FROM 400-TYPE LINE CIRCUITS ARE CONNECTED DIRECTLY TO TEL SETS.
7. THE 417A KTU MAY BE USED TO PROVIDE THE ADD-ON FEATURE WITH DIAL INTERCOM.

OPTIONS:

Z		CONTROLLED BY NONLOCKING KEY
X	ONE STATION	
W	TWO STATIONS	
Y	CONTROLLED BY EXCLUSION KEY	

Fig. 6—Condensed Functional Schematic of 417A KTU (Add-On Conference Circuit)

- Circuit is arranged to cancel conference when handset is placed on-hook or speakerphone is returned to OFF.

- One of the conferenced lines may be disconnected by returning exclusion key to normal or by operating the nonlocking key.

428A KTU (Multiline Exclusion Circuit)

2.05 The 428A KTU (Fig. 7) is a 4-inch, 40-contact unit which replaces the 405A (MD) KTU.

2.06 The KTU permits a key telephone set to exclude a station or stations from either of two CO or PBX lines using a common control key. One key can provide control for as many exclusion circuits as are required at a control station. An exclusion key, cutoff or turnbutton key, convertible pickup key, or an external locking or nonlocking key, may be used as the control key. In all cases, exclusion is canceled when the control station hangs up. A visual signal can be provided at the control station, indicating exclusion is in use.

429A (MD) and 429B KTUs (Supplementary Hold Detector Circuit) and 430A KTU (Flutter Generator Circuit)

2.07 The 429A (MD), 429B, and 430A KTUs (Fig. 8 and 9) are 4-inch, 40- and 20-contact units which replace the 406A and 408A KTUs, respectively.

2.08 These KTUs together provide an adjustable lamp flutter of approximately 12 interruptions per second to indicate a supplementary hold condition as distinguished from lamp wink or steady signal associated with a normal hold condition.

2.09 Supplementary hold provides two features:

(a) ***Priority Hold*** where the flutter indication is desired at all stations having access to lines so equipped. It serves to alert personnel that an incoming call has been answered (acknowledged only), placed on hold, and should be completed as soon as the first available attendant is able to do so. ***Priority Hold*** requires a key which contains the supplementary hold button as well as the regular hold button.

(b) ***I Hold*** where the flutter indication is desired ***only*** on the line appearance at the station initiating the hold. All other stations receive the normal hold signal. This enables an attendant, having access to a number of lines, to recognize calls he has placed on hold and calls being held by associate attendants. ***I Hold*** does not require the use of a supplementary hold button; however, the regular hold button must be equipped with a transfer contact arrangement, as in the 565HK-type telephone set.

2.10 A hold detector circuit is required on a ***per line*** basis with ***priority hold*** and on a ***per station per line*** basis with ***I hold.*** The 429-type KTU provides two detector circuits.

2.11 The 430A (flutter generator) can connect to a maximum of 100 lamps and 20 supplementary and/or regular hold buttons.

451B KTU (Music-On-Hold)

2.12 The 451B KTU (Fig. 10) is a 4-inch, 40-contact unit that provides music-on-hold to CO/PBX line circuits.

2.13 The 451B KTU transmits music to distant stations that are placed on hold by users of this system. The KTU contains seven identical circuits, each of which may provide music-on-hold to one CO/PBX line circuit. The music source should have an adjustable volume control so that the listening level of the music may be adjusted.

> ▶***Note:*** The 451B KTU is not electrically interchangeable with the 498A KTU, and it cannot be used with the 400H KTU. The 451B KTU cannot be used in the apparatus mounting listed in Table A.◀

471A ▶and 471B◀ KTUs (Battery Reversal Toll Restriction)

2.14 The 471A KTU (Fig. 11) is a 4-inch, 18-contact unit which provides for restricting toll calls on a per-line basis to key telephone stations. This circuit can only be used with central office circuits that provide a polarity reversal on the tip and ring of the line on toll calls.

2.15 The toll restriction circuit is provided to:

- Determine that a toll call has been dialed

- Drop toll calls from restricted stations by opening the tip and ring

- Allow toll calls from unrestricted stations.

2.16 The status of each station during toll calls is determined by the manner in which the station A lead is wired. Restricted stations are wired to the A lead from the associated CO/PBX line circuit; unrestricted stations are wired to the A(U) lead from the 471A KTU (standard wiring arrangement, Fig. 11). This is the preferred method of wiring. The 471A KTU can also be used in installations where grouping of restricted or unrestricted A leads is not desired or where A lead control is not used. In these cases, the 471A KTU is installed in the tip and ring between the line circuit, if used, and the restricted telephone sets (alternate wiring arrangement, Fig. 11). With this wiring, restricted stations on the line may be cut off for approximately 2 seconds during polarity reversal. No A lead connections are made to the 471A KTU.

2.17 The 471A KTU can be installed in any slot of a mounting arrangement that will accept a 400-type KTU line circuit.

2.18 ▶The 471B KTU is identical to the 471A KTU except that it has been updated for use with the privacy and supplementary hold feature. In addition, the 471B has been improved to reduce the minimum duration of polarity reversal that is detected.◀

479A ▶and 479B◀ KTUs (Rotary Dial Toll Restriction)

2.19 The 479A KTU (Fig. 12) is an 8-inch, 20-contact unit which provides toll restriction on rotary lines where central office toll diversion is not available. Optional circuit modules can be mounted on the 479A KTU to provide digit absorption (107A) or to allow restricted stations to call foreign number plan areas (107B).

2.20 The 479A KTU:

- Monitors rotary dialing to detect restricted digit combinations

- Restricts calls to operator and foreign Numbering Plan Areas (NPA)

- Allows service calls or 800 area code numbers

- Optionally restricts or passes toll calls in home NPAs where the prefix 1 is used

- Can be arranged for loop-start or ground-start operation. Ground start operation provides more security against "nonallowed" calls being placed.

2.21 ▶The 479B is the same as the 479A KTU except it can be used with the privacy feature and/or supplementary hold. The 479B also offers better protection against registration of false digits in step-by-step (SXS) central offices.◀

2.22 All programming and options (Fig. 12) are applied to the 479-type KTU and the 107A or 107B CM using KS-21290,L1 connectors as follows:

- Ground start or loop start—479-type KTU

- Prefix 1 calls, restricted or permitted—479-type KTU

- Digit absorption—107A CM

- Unrestricted dialing of one or two foreign NPAs—107B CM.

Note: If 107A CM is not required, two 107B CMs can be mounted on the 479-type KTU for a maximum of four allowed NPA codes.

2.23 Because the 479-type KTU is an 8-inch board, it requires a mounting arrangement having two vertical connectors such as a 69D apparatus mounting, 642A panel, or 513-, 514-, or 515-type KSU. The status of the stations during toll calls is determined by how the station A lead is wired. Restricted stations are wired to the A lead of the associated line circuit; unrestricted stations are wired to the A(U) lead from the 479-type KTU. Ground start lines require the A lead be wired as shown in Fig. 12 for start-up control. During power failure, the 479-type KTU will be inoperative and a momentary close contact key must be provided to furnish the ground-start function.

▶498A (Music-On-Hold)

2.24 The 498A KTU (Fig. 13) is a 4-inch, 40-contact unit which provides music-on-hold for four CO/PBX line circuits. An optional circuit module,

116A1 (Fig. 14), can be mounted on the 498A KTU to provide music-on-hold for an additional three lines.

2.25 The 498A and 116A1 CM provide a balanced connection of music-on-hold to the tip and ring. The music source should have an adjustable volume control so that the music level may be adjusted.

2.26 Table A lists the key service units, panels, and apparatus mounting compatible with the 498A KTU and the 116A1 CM.

2.27 The 498A KTU is not compatible with the 570A and 580A KSUs, 702A and 703A panels. New COM KEY* system installations, with the 570B, 580B KSUs or the 702B and 703B panels with the music-on-hold feature, must include the 498A KTU plus the 116A1 CM for each group of seven lines.◀

* Trademark

▶TABLE A◀

EQUIPMENT USED WITH 498A KTU AND 116A1 CM

498A KTU (4 LINES)		
KSU	PANEL	APP MTG
570B 580B 513A1, A2, A3 515A1, A2, A3	597B 598B 642A	69D
498A KTU PLUS 116A1 CM (7 LINES)		
570B 580B	702B 703B 642A	69D*

* A 69D equipped with 7-line music-on-hold (116A1 CM) cannot be used with a second 498A equipped with a 116A1 CM or another KTU which requires the use of the RN lead.

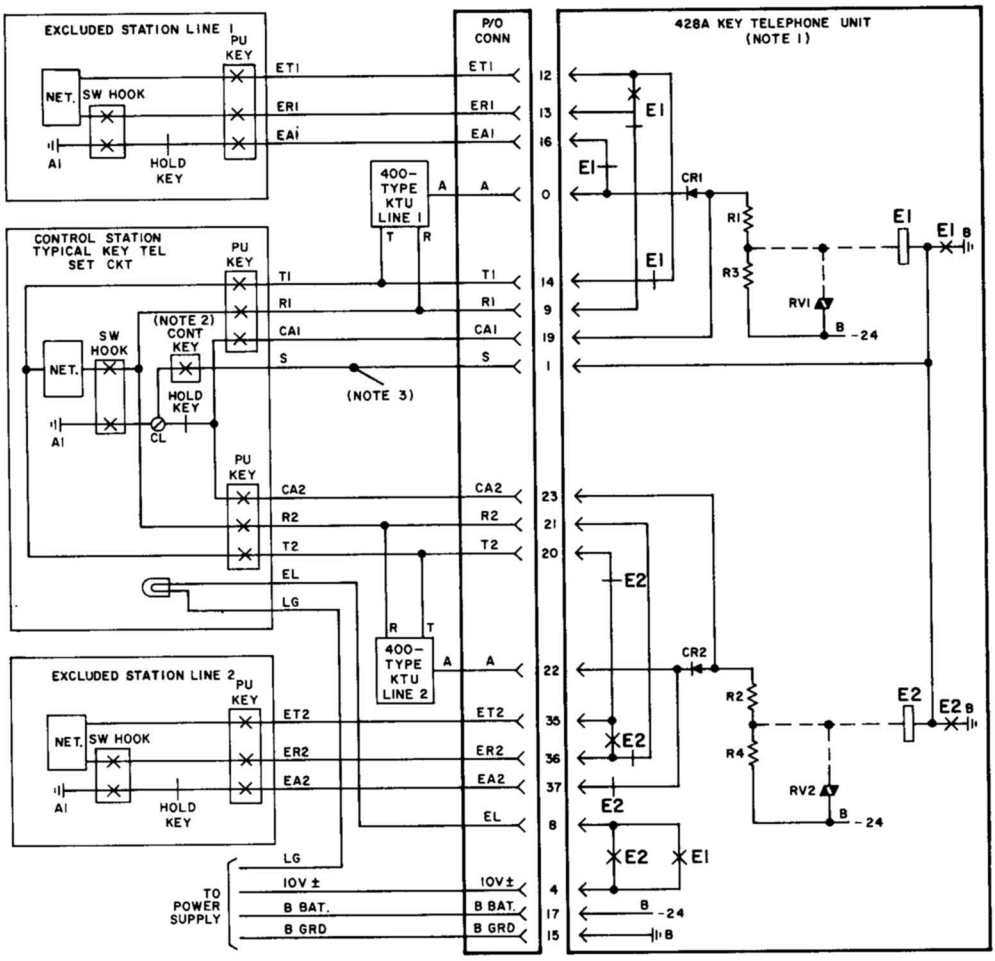

NOTES:

1. REQUIRES A MOUNTING FACILITY EQUIPPED WITH A 40-PIN CONNECTOR.
2. CONTROL KEY MAY BE A LOCKING OR NONLOCKING.
3. "S" LEAD CAN ONLY MULTIPLE TO OTHER 428A KTUS CONTROLLED BY THE SAME STATION.

Fig. 7—Condensed Functional Schematic of 428A KTU (Multiline Exclusion Circuit)

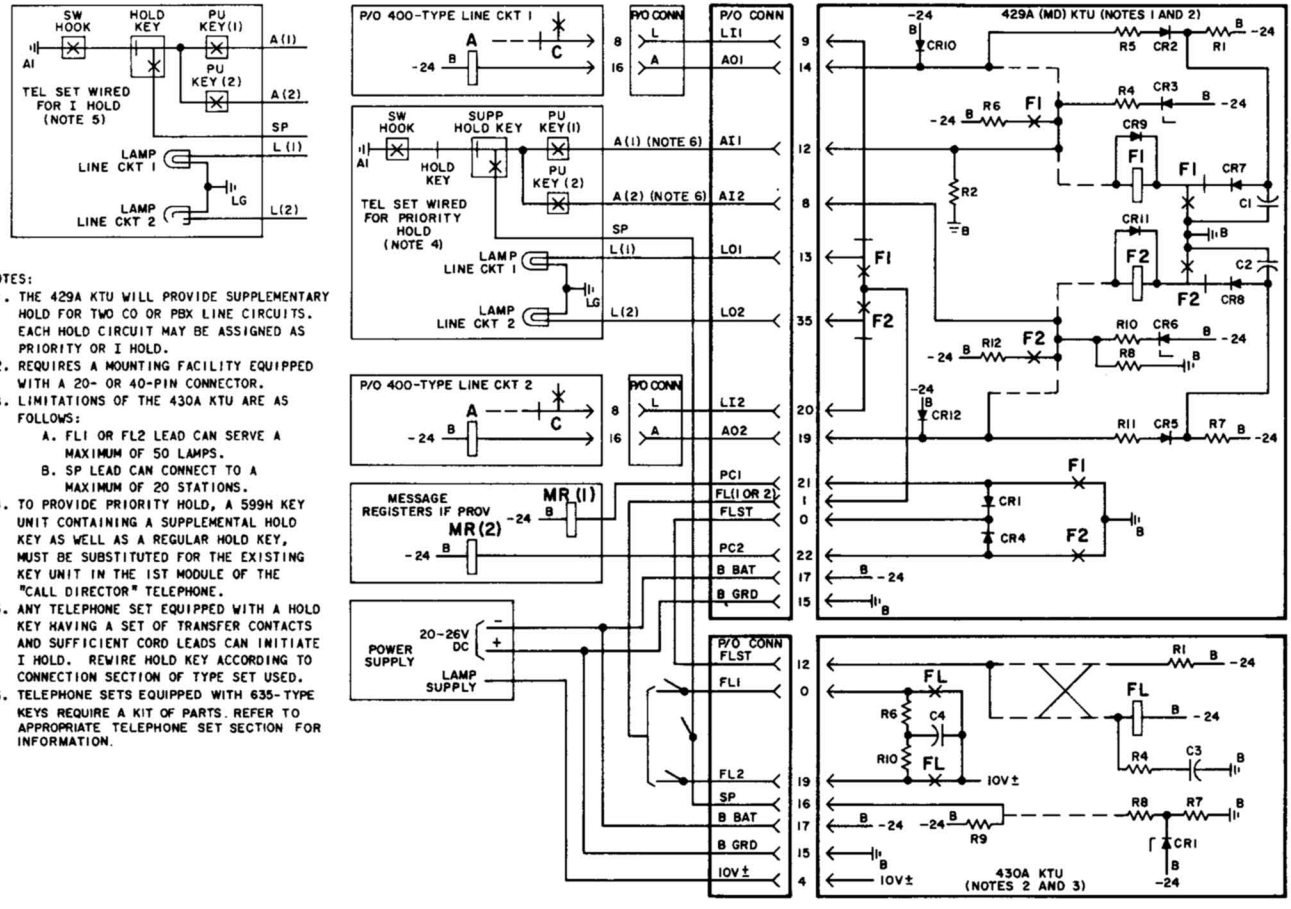

NOTES:

1. THE 429A KTU WILL PROVIDE SUPPLEMENTARY HOLD FOR TWO CO OR PBX LINE CIRCUITS. EACH HOLD CIRCUIT MAY BE ASSIGNED AS PRIORITY OR I HOLD.
2. REQUIRES A MOUNTING FACILITY EQUIPPED WITH A 20- OR 40-PIN CONNECTOR.
3. LIMITATIONS OF THE 430A KTU ARE AS FOLLOWS:
   A. FL1 OR FL2 LEAD CAN SERVE A MAXIMUM OF 50 LAMPS.
   B. SP LEAD CAN CONNECT TO A MAXIMUM OF 20 STATIONS.
4. TO PROVIDE PRIORITY HOLD, A 599H KEY UNIT CONTAINING A SUPPLEMENTAL HOLD KEY AS WELL AS A REGULAR HOLD KEY, MUST BE SUBSTITUTED FOR THE EXISTING KEY UNIT IN THE 1ST MODULE OF THE "CALL DIRECTOR" TELEPHONE.
5. ANY TELEPHONE SET EQUIPPED WITH A HOLD KEY HAVING A SET OF TRANSFER CONTACTS AND SUFFICIENT CORD LEADS CAN INITIATE I HOLD. REWIRE HOLD KEY ACCORDING TO CONNECTION SECTION OF TYPE SET USED.
6. TELEPHONE SETS EQUIPPED WITH 635-TYPE KEYS REQUIRE A KIT OF PARTS. REFER TO APPROPRIATE TELEPHONE SET SECTION FOR INFORMATION.

Fig. 8—Condensed Functional Schematic of 429A (MD) KTU (Supplementary Hold Detector Circuit) and 430A KTU (Flutter Generator Circuit)

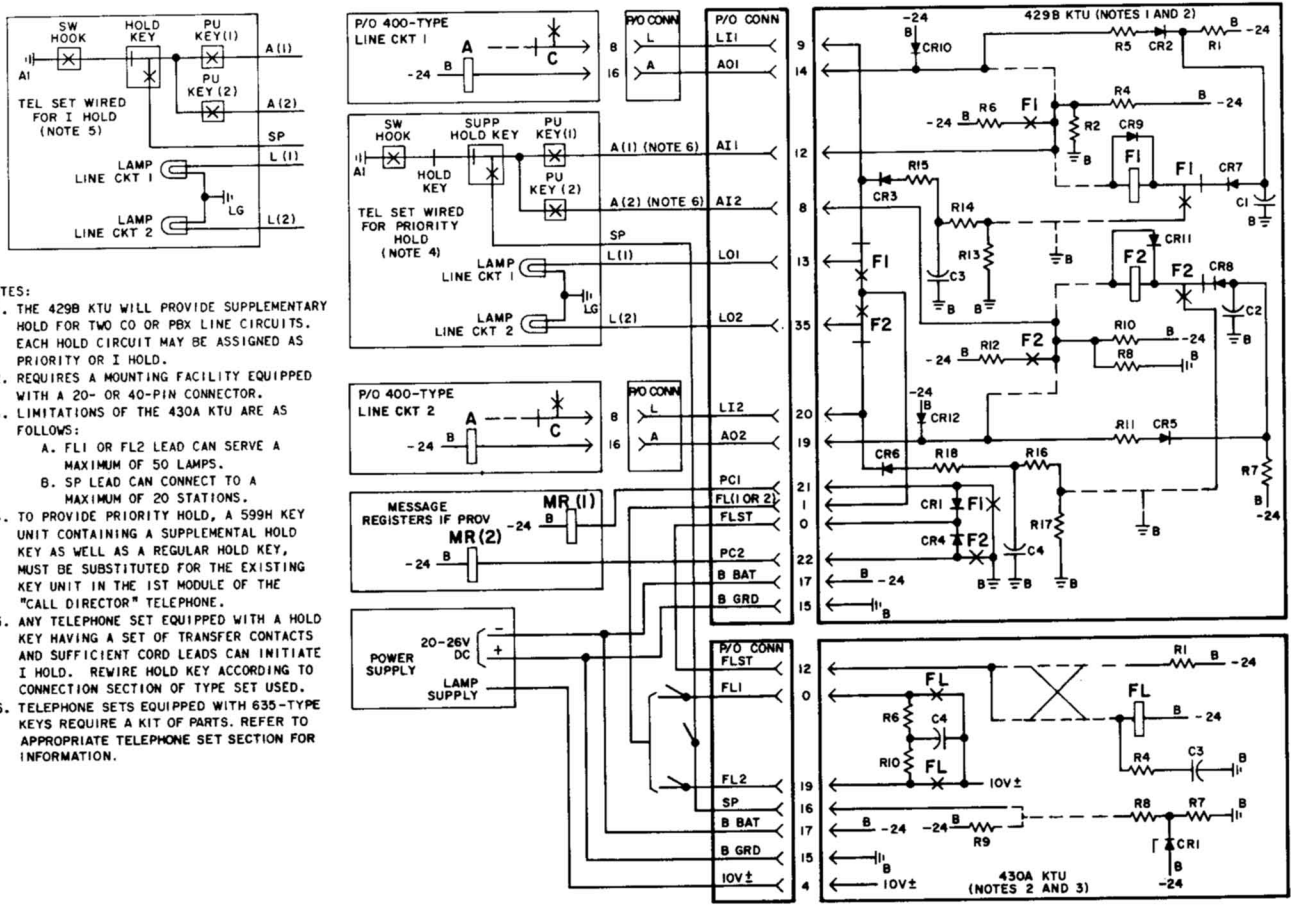

NOTES:

1. THE 429B KTU WILL PROVIDE SUPPLEMENTARY HOLD FOR TWO CO OR PBX LINE CIRCUITS. EACH HOLD CIRCUIT MAY BE ASSIGNED AS PRIORITY OR I HOLD.
2. REQUIRES A MOUNTING FACILITY EQUIPPED WITH A 20- OR 40-PIN CONNECTOR.
3. LIMITATIONS OF THE 430A KTU ARE AS FOLLOWS:
   A. FL1 OR FL2 LEAD CAN SERVE A MAXIMUM OF 50 LAMPS.
   B. SP LEAD CAN CONNECT TO A MAXIMUM OF 20 STATIONS.
4. TO PROVIDE PRIORITY HOLD, A 599H KEY UNIT CONTAINING A SUPPLEMENTAL HOLD KEY AS WELL AS A REGULAR HOLD KEY, MUST BE SUBSTITUTED FOR THE EXISTING KEY UNIT IN THE 1ST MODULE OF THE "CALL DIRECTOR" TELEPHONE.
5. ANY TELEPHONE SET EQUIPPED WITH A HOLD KEY HAVING A SET OF TRANSFER CONTACTS AND SUFFICIENT CORD LEADS CAN INITIATE I HOLD. REWIRE HOLD KEY ACCORDING TO CONNECTION SECTION OF TYPE SET USED.
6. TELEPHONE SETS EQUIPPED WITH 635-TYPE KEYS REQUIRE A KIT OF PARTS. REFER TO APPROPRIATE TELEPHONE SET SECTION FOR INFORMATION.

Fig. 9—Condensed Functional Schematic of 429B KTU (Supplementary Hold Detector Circuit) and 430A KTU (Flutter Generator Circuit)

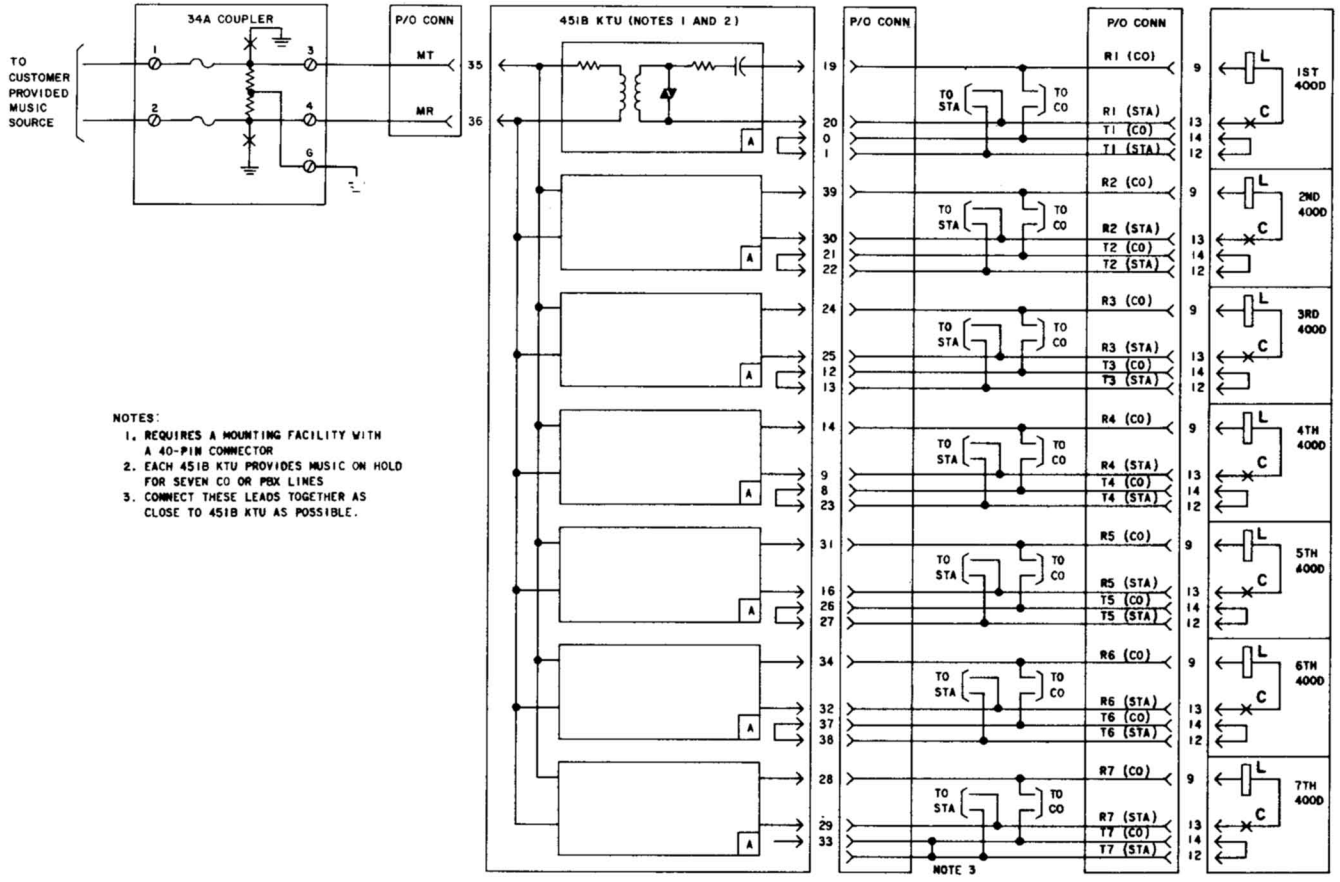

Fig. 10—Condensed Functional Schematic of 451B KTU (Music-On-Hold)

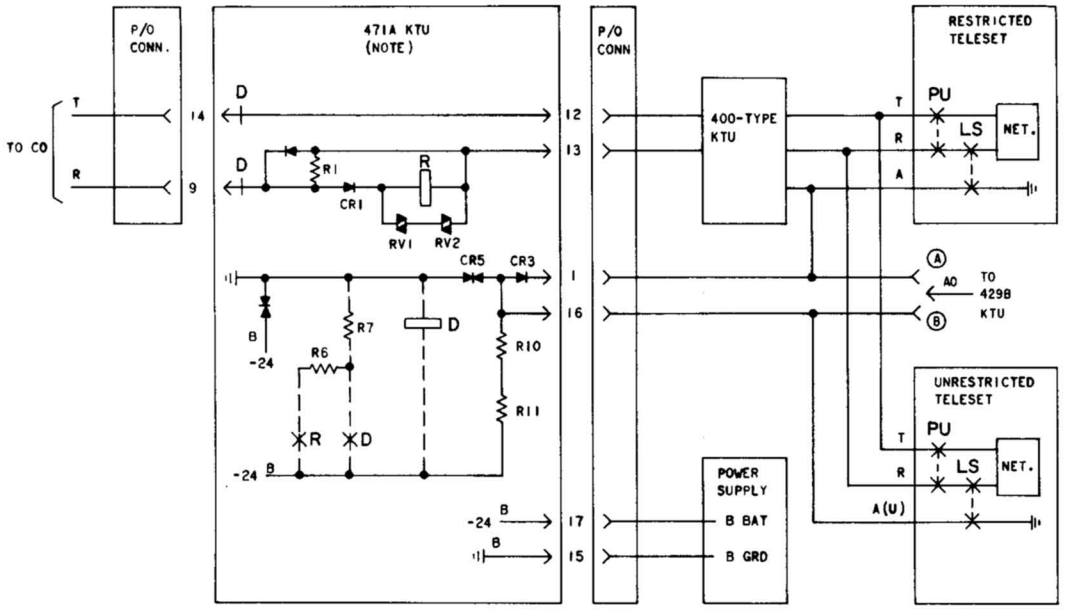

A. STANDARD WIRING ARRANGEMENT

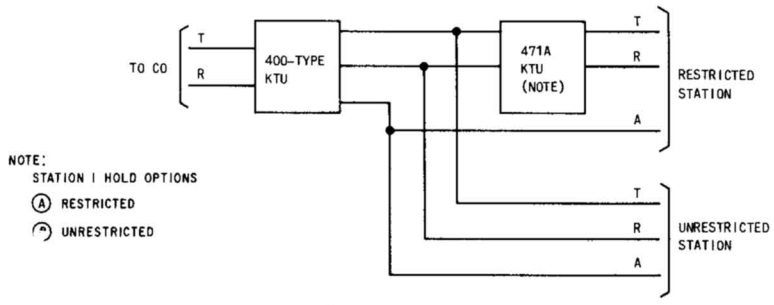

B. ALTERNATE WIRING ARRANGEMENT

NOTE:
REQUIRES A MOUNTING FACILITY EQUIPPED WITH AN 18-, 20-, OR 40-PIN CONNECTOR

Fig. 11—Condensed Functional Schematic of 471-Type KTU (Battery Reversal Toll Restriction Circuit)

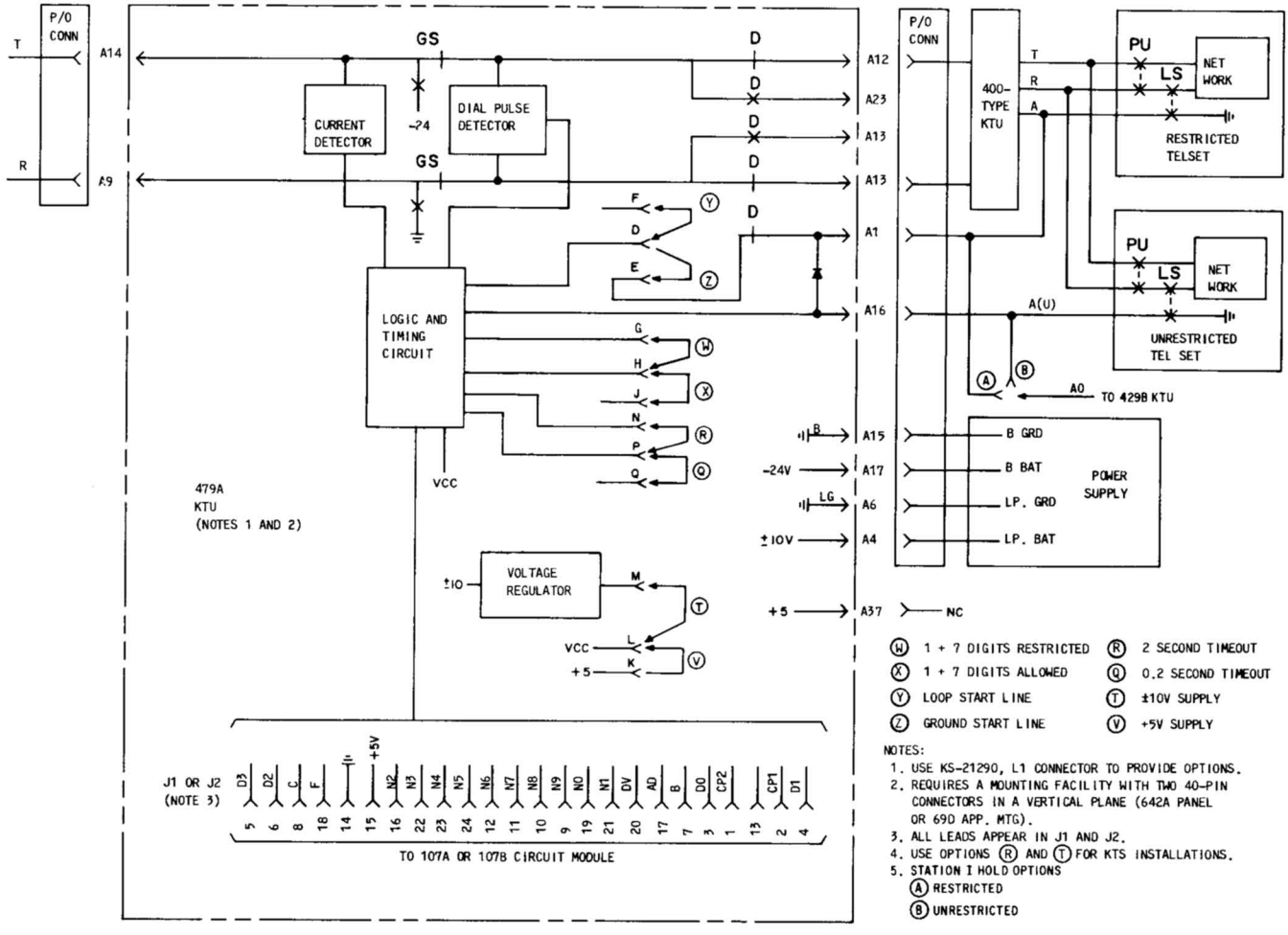

Fig. 12—Condensed Functional Schematic of 479-Type KTU, 107A and 107B Circuit Module (Rotary Dial Toll Restriction Circuit) (Sheet 1 of 3)

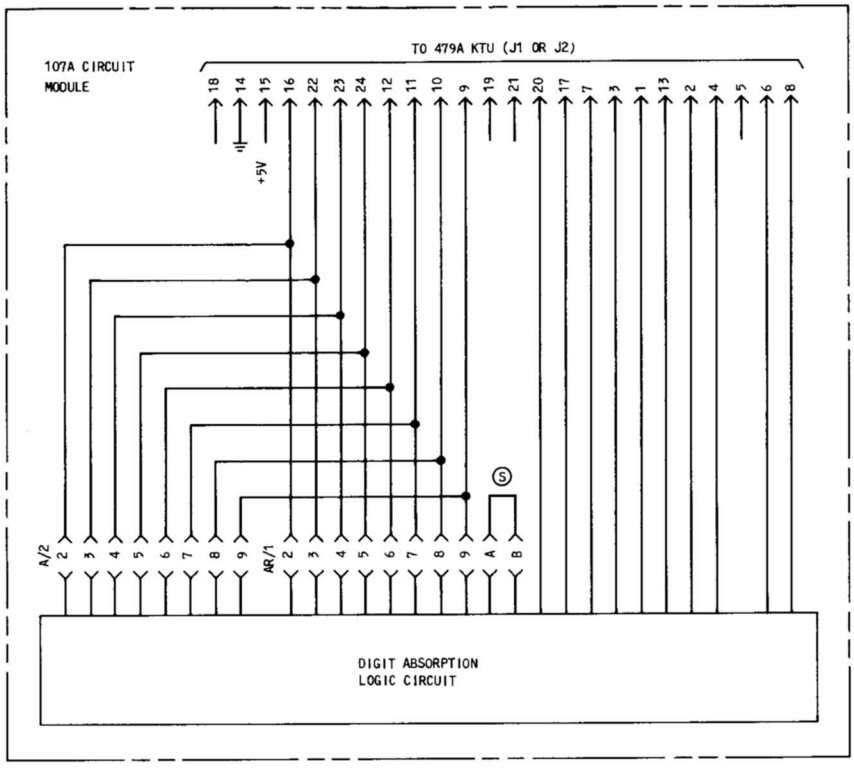

NOTES:
1. TO PROVIDE TWO-DIGIT ADSORPTION:
   A. ADD (S) OPTION, USING KS-21290,L1 CONNECTOR IN TERMINALS A AND B.
   B. ADD CONNECTOR IN OPTION FIELD AR/1 FOR EACH NUMBER TO BE ABSORBED AS 1ST DIGIT.
   C. ADD CONNECTOR IN OPTION FIELD A/2 FOR EACH NUMBER TO BE ABSORBED AS 2ND DIGIT
2. TO ABSORB REPEATEDLY AND/OR ABSORB ONLY ONCE:
   A. REMOVE CONNECTOR, IF PROVIDED FROM TERMINALS A AND B.
   B. ADD CONNECTOR IN OPTION FIELD AR/1 FOR EACH NUMBER TO BE ABSORBED REPEATEDLY
   C. ADD CONNECTOR IN OPTION FIELD A/2 FOR EACH NUMBER TO BE ABSORBED ONLY ONCE
3. PROGRAM CIRCUIT MODULE BEFORE MOUNTING ON EITHER J1 OR J2 OF THE 479A KTU.

Fig. 12—Condensed Functional Schematic of 479-Type KTU, 107A and 107B Circuit Module (Rotary Dial Toll Restriction Circuit) (Sheet 2 of 3)

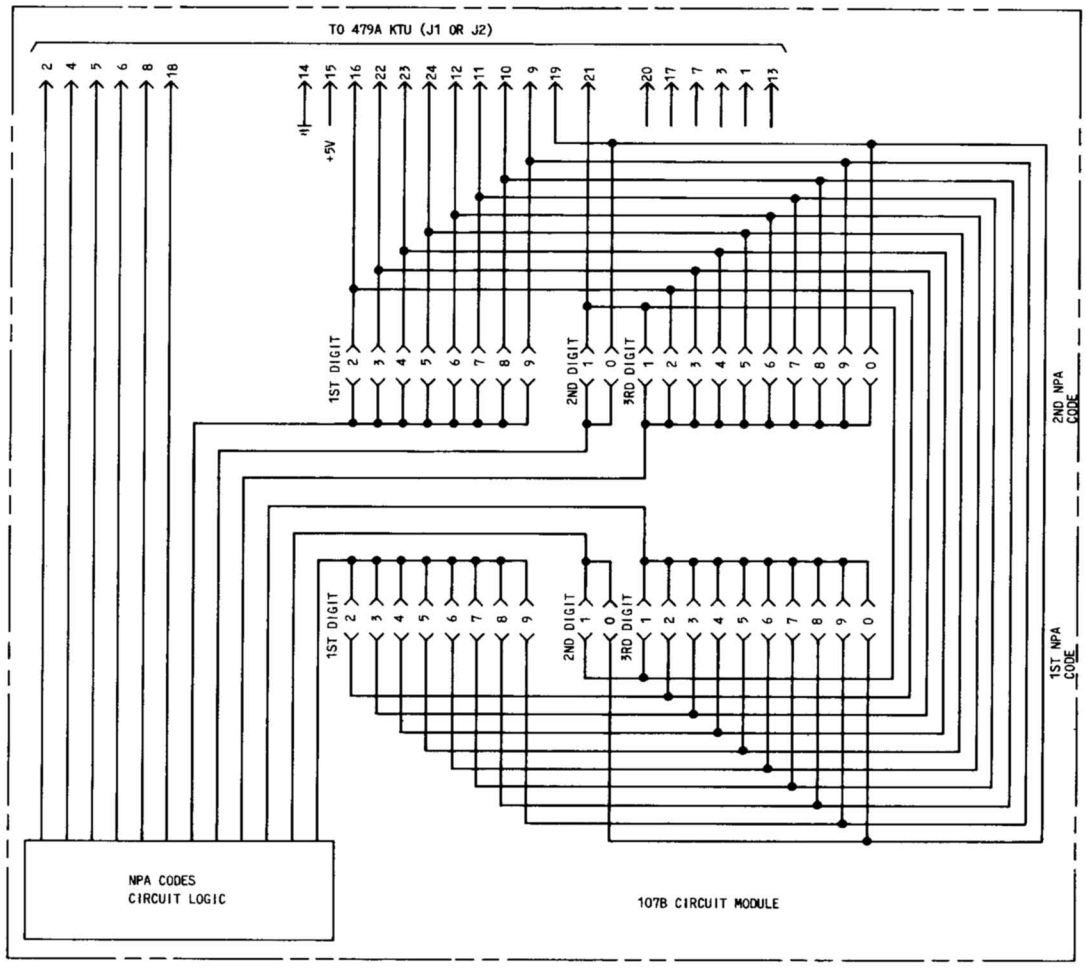

NOTES:

1. PROGRAM CIRCUIT MODULE BY PROVIDING KS-21290L1 CONNECTOR IN EACH NUMBER OF NPA CODE NOT TO BE RESTRICTED. EACH 107B CIRCUIT MODULE WILL HANDLE TWO NPA CODES.
2. IF 107A IS NOT REQUIRED, TWO 107B MODULES CAN BE MOUNTED ON THE 479A KTU FOR A TOTAL OF FOUR NPA CODES.

Fig. 12—Condensed Functional Schematic of 479-Type KTU, 107A and 107B Circuit Module (Rotary Dial Toll Restriction Circuit) (Sheet 3 of 3)

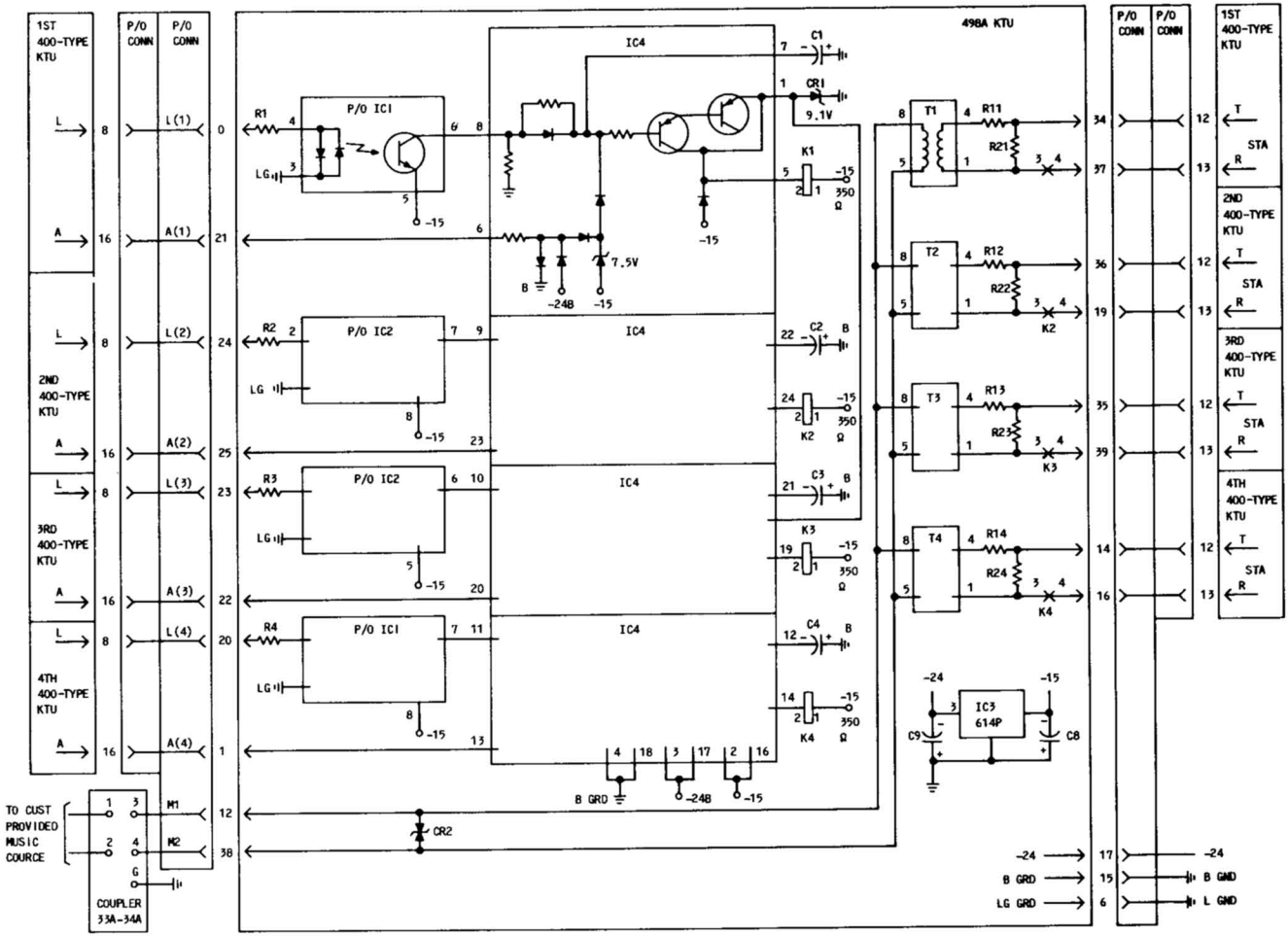

Fig. 13—Condensed Functional Schematic of 498A KTU (Music-On-Hold Circuit)

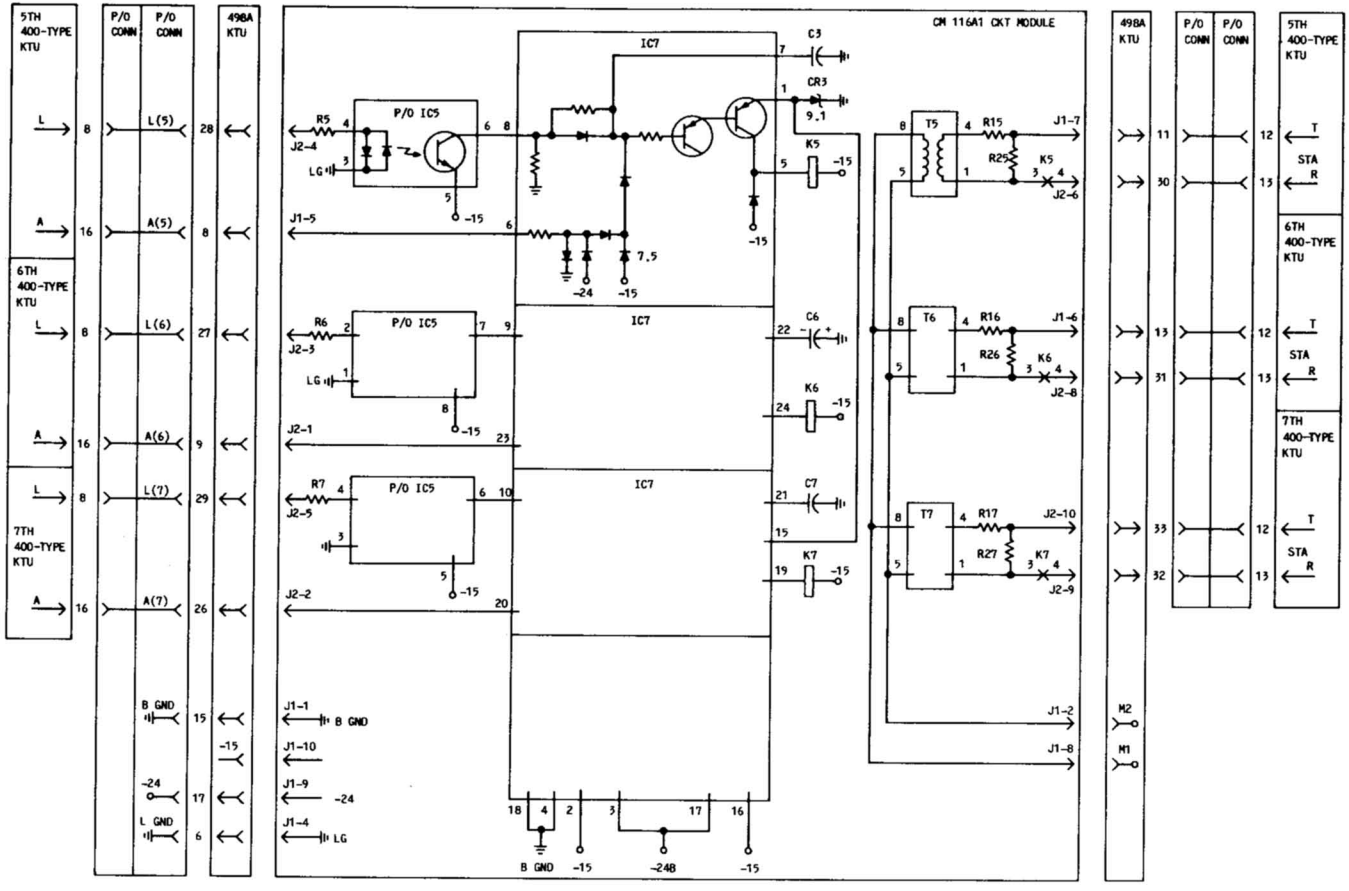

Fig. 14—Condensed Functional Schematic of 116A1 CM (Music-On-Hold Circuit)

SERVICE

400-SERIES KEY TELEPHONE UNITS

FOR INTERCOM SERVICES

1. GENERAL

1.01 This section provides schematic information for the 400-series key telephone units (KTUs) which provide talking circuits and control and signaling functions between telephone sets in a 1A2 Key Telephone System (KTS) (Fig. 1 and 2).

1.02 This section is reissued to add information on:

- 444-type KTU
- 454-Type KTU
- 460-Type KTU
- 626A modular panel.

1.03 The following KTUs and their functions are covered in this section:

- 401A—Manual Intercom Line Circuit
- 407 Type—Dial Intercom, 10-Code Selector Circuit
- 420A—Long Line Circuit
- 421A—Direct Station Selection (DSS) Circuit or Preset Conference
- 422B—Station Busy Selector Circuit
- 423A—Dial Tone, Busy Tone, and Audible Ringback Tone Circuit for nonmodular panel installations
- 424 Type—Dial Intercom, 19-Code Selector Circuit
- 425 Type—Flashing Lamp Circuit
- 426A—Amplifier, Band Separation, and Limiter Circuit
- 427 Type—Frequency Recognition and Translation Circuit
- 440A (MD)—TOUCH-TONE® Adapter Circuit
- ◗444 Type—Selector Extender Circuit
- 454 Type—3-Path Access Circuit
- 460 Type—2-Path Access Circuit◖
- 476A—Dial Tone, Busy Tone, and Audible Ringback Tone Circuit for modular panel installations
- 478B—TOUCH-TONE Adapter Circuit
- 494A—TOUCH-TONE Selector Circuit.

1.04 ◗Detailed information on the 626A modular panel (Fig. 3) and its associated KTUs may be found in Section 518-215-421.



The 401A, 407-type, 424-type, and 494A KTUs must not be used for multiline conferencing to CO/PBX lines using simultaneous depression of pickup buttons (mashdown conferencing). This can cause damage to the KTUs and violates the Federal Communications Commission (FCC) registration requirements. Add-on conferencing to CO/PBX lines using the 417A KTU is allowed. This restriction does not apply in COM KEY* systems and for 2- and 3-path intercom arrangements (options FW and S) in the 626A modular panel.◖

*Trademark of AT&T.

NOTICE

Not for use or disclosure outside the
Bell System except under written agreement

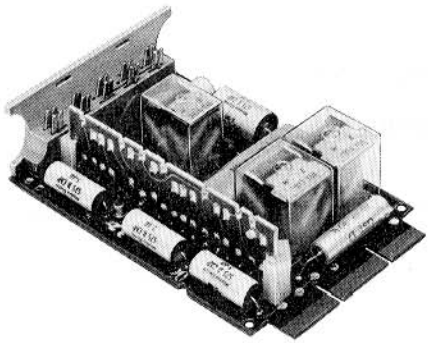

Fig. 1—Typical 4-Inch Key Telephone Unit

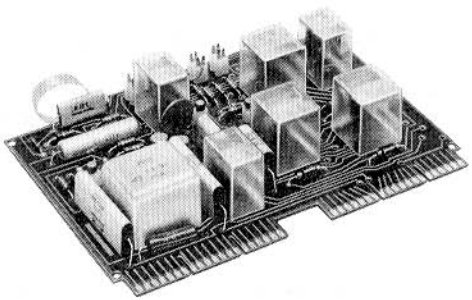

Fig. 2—Typical 8-Inch Key Telephone Unit

1.05 ▶After January 1, 1980, the 454C and 460C KTUs must be used when providing their related services. Earlier vintage KTUs may be used for additions and maintenance at grandfathered installations for the life of the units, provided they are not modified.◀

1.06 Information on line services is covered in Section 518-215-400; auxiliary circuits, Section 518-215-401; and all control circuits including audible signals, Section 518-215-403.

A. Mechanical

1.07 All circuit components on these KTUs are mounted in a plug-in printed wiring board, one end of which is equipped with contacts. A 4-inch board may have 18, 20, or 40 contacts; an 8-inch board will have 80 contacts (requiring two vertical 40-pin connectors). The circuit boards plug into mating connectors in key service units, panels, or apparatus mountings. Wiring from the connectors will be dedicated or nondedicated leads. Dedicated leads are those that normally appear on the same contacts of all KTUs, such as supply voltages and grounds, and are normally factory wired. Nondedicated leads are those whose designation and function vary and are made available for installer connections. Typical 4- and 8-inch KTUs are shown in Fig. 1 and 2.

B. Electrical

1.08 Functional schematics (Fig. 4 through 21) cover the basic circuitry of each KTU, contacts used, and its relationship to telephone sets, other KTUs, power supplies, and apparatus. Dashed lines are used to simplify the schematics and to indicate intermediate circuitry. If full schematics are required, refer to the SDs listed in paragraph 1.11.

1.09 Voltages required for operation of the KTU, or provided to associated apparatus by the KTU, are shown with their connector pins. Other voltages may appear on the contacts of the mating connector, depending on the mounting arrangement, but not on the KTU.

1.10 The KTUs may require the following power supply voltages and their associated grounds:

- -24 volts (B battery) for control
- ±10 volts for visual and audible signals
- ±105 volts for audible signals.

1.11 This issue of the section is based on the following drawings:

SD-69475-01, Issue 6—401A KTU

SD-69567-01, Issue 15—407B (MD) and C, 420A, 422B, 423A and B, 424A (MD), B (MD), and C, 425A (MD) and B, 476A, and 494A KTUs

SD-69590-01, Issue 3—421A KTU

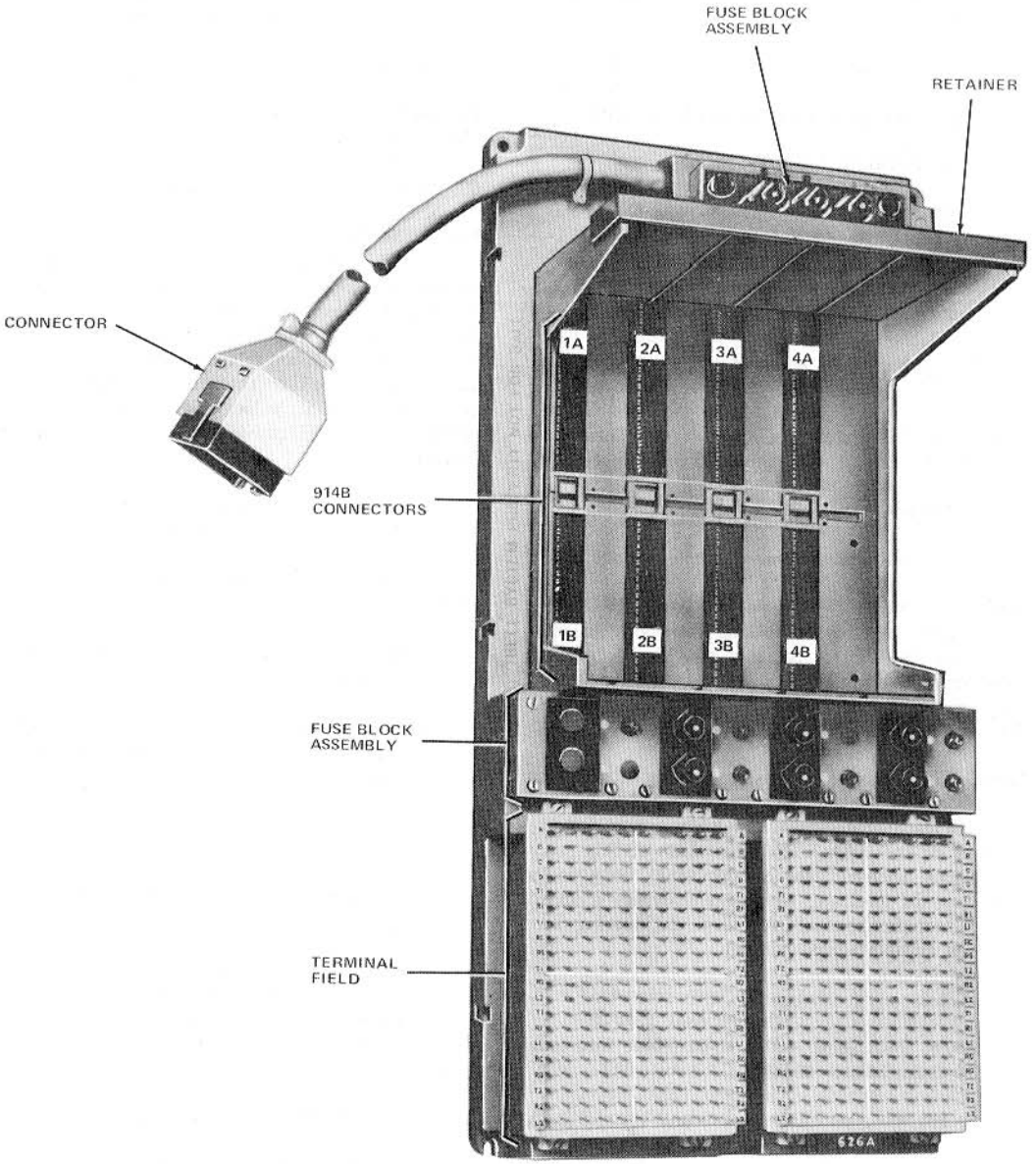

Fig. 3—◗626A Modular Panel◖

SD-69595-01, Issue 7—426A, 427B, and C KTUs

SD-69906-01, Issue 1—440A (MD) KTU

SD-69653-01, Issue 2—444-Type KTU

SD-69930-01, Issue 1—454-Type KTU

SD-69652-01, Issue 3—460-Type KTU

SD-69931-01, Issue 1—478B KTU

SD-69658-01, Issue 4—626A Modular Panel.

If this section is to be used with equipment or apparatus reflecting later issues of the drawings, reference should be made to the CDs and SDs to determine the extent of the changes and the manner in which the section may be affected.

2. IDENTIFICATION

A. 401A KTU (Manual Intercom Line Circuit)

2.01 The 401A KTU (Fig. 4) is a 4-inch, 18-contact unit that provides talking battery for manual intercom and control for line busy lamp feature. Audible signaling between stations is accomplished by means of separately furnished pushbuttons, buzzers, or bells.

2.02 The A lead of a station associated with the manual intercom circuit provides ground through the operated switchhook contacts to operate a relay on the 401A KTU. Operation of this relay completes a circuit for the optional busy lamp feature. In addition, the relay provides a spare set of transfer contacts for local engineering use, such as audible signal control.

B. 407B (MD) and 407C KTUs (Dial Intercom, 10-Code Selector Circuit)

2.03 The 407-type KTUs (Fig. 5 and 6) are 8-inch, 80-contact units for use with the dial selective intercom circuits. They provide the following basic operating features:

- Maximum of 10 station codes (0-9)
- Busy lamp at all stations
- Adjustable single spurt signaling (0.5 to 2.5 seconds) by adjusting timing resistor
- Rotary dial selection.

The 407C KTU replaces the 407B KTU (MD) on a plug-compatible basis.

C. 420A KTU (Long Line Circuit)

2.04 The 420A KTU (Fig. 7) is a 4-inch, 18-contact unit that provides a circuit for use with off-premise (long line) stations connected to the dial selective intercom line circuit. This KTU extends the loop resistance of the basic selector to 500 ohms. No provision is made for busy lamps at stations connected to this circuit. Mutilation of other station dial pulses is prevented by relay operation. The KTU provides the following operating features:

- Signaling and talking over single pair from off-premise (long line) stations
- Any code may be assigned to off-premise stations
- Ringing can be tripped only during silent intervals

Note: If handset pickup occurs during ringing cycle, ring will be heard in handset receiver.

- Used with rotary or TOUCH-TONE telephone set
- When associated with TOUCH-TONE adapter circuit [426A with 427B or C KTUs, 440A (MD), or 478B KTU] or TOUCH-TONE Selector Circuit (494A KTU), maximum nonrepeatered station conductor loop is 500 ohms or 4-dB insertion loss at 1000 Hz, whichever is limiting.

D. 421A KTU (DSS Circuit or Preset Conference)

2.05 The 421A KTU (Fig. 8 and 9) is a 4-inch, 40-contact unit that can be used as a DSS circuit or a preset conference circuit. The KTU has the following operating features:

- Used with common audible matrix

NOTE:
1. REQUIRES A MOUNTING FACILITY EQUIPPED WITH AN 18-, 20-, OR 40-PIN CONNECTOR.

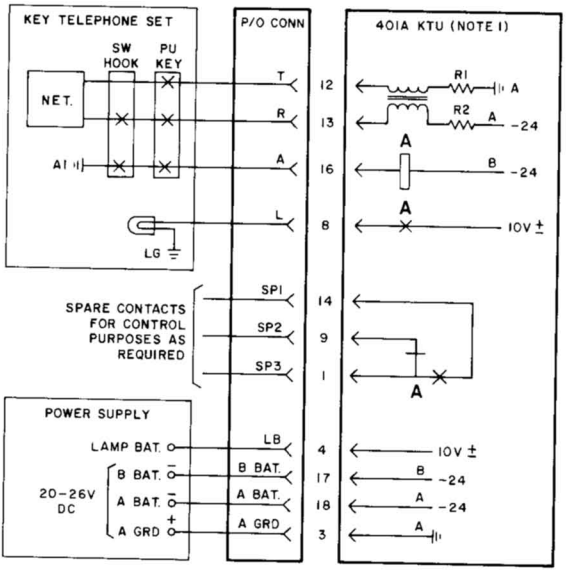

Fig. 4—Condensed Functional Schematic of 401A KTU (Manual Intercom Line Circuit)

- Option strapping when used for a preset conference circuit
- Maximum external circuit loop resistance is 120 ohms
- Used to provide DSS in conjunction with 407- or 424-type KTUs.
- Allows line lamps to flash but prevents audible signal at called station when called station is busy on other line
- If the calling station maintains connection and the called station goes from busy to on-hook, the busy signal to the calling station stops and the audible signal (with flashing line lamp) begins at the called station.

E. 422B KTU (Station Busy Selector Circuit)

2.06 The 422B KTU (Fig. 10) is a 4-inch, 40-contact unit that provides control of station busy tone for the dial selective intercom line circuit. It also provides control circuits for 10 station codes. When a system consists of 19 station codes, two KTUs are required—one for the units group (single-digit codes, 0-9) and one for the tens group (2-digit codes, X0-X9). This KTU provides the following operating features:

- Determines if called station is off-hook or busy on other line

F. 423A KTU (Dial Tone, Busy Tone, and Audible Ringback Tone Circuit)

2.07 The 423A KTU (Fig. 11) is a 4-inch, 20-contact unit that provides a variable rate multivibrator to produce dial tone, station busy tone, or audible ringback tone for the dial selective intercom line circuit. To provide busy tone and audible ringback tone, the multivibrator of the 423A KTU is under control of an associated interrupter (ground). For all tone signals, the output of the multivibrator is returned to the originating station over the tip side of the intercom line.

NOTES:

1. REQUIRES A MOUNTING FACILITY EQUIPPED WITH TWO 914A (40-PIN) CONNECTORS MOUNTED IN A VERTICAL PLANE.
2. RESISTOR R4 CAN BE ADJUSTED TO PROVIDE A VARIABLE TIMING CYCLE FOR THE RELEASE OF RELAY B (SET AT 1.5 SECONDS AT FACTORY). TURN KNURLED WHEEL FULL COUNTERCLOCKWISE FOR 0.5 SECOND TIMEOUT. TURN CLOCKWISE TO MAKE INTERVAL LONGER. AT THE FULL CLOCKWISE POSITION TIMING MAY BE SO LONG THAT B RELAY MAY NOT RELEASE.

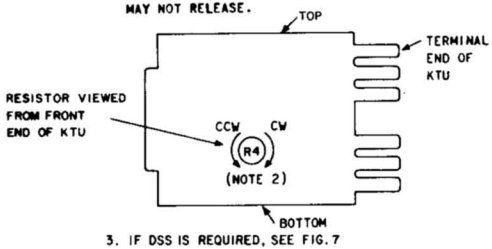

3. IF DSS IS REQUIRED, SEE FIG. 7

TABLE:

DIGIT DIALED	COUNTER RELAYS OPERATED AT END OF DIAL PULSE				
	Y1	Y2	Y3	Y4	Y5
1		●			
2	●				
3			●	●	
4		●		●	
5	●			●	●
6			●	●	●
7		●		●	●
8	●				●
9			●		●
0		●			●

4. 440A(MD) OR 478B KTU MAY BE USED TO PROVIDE "TOUCH-TONE" DIALING IN PLACE OF 426A WITH 427B (SERIES 4) OR C KTUS.

OPTIONS:

Z	WITHOUT		"TOUCH-TONE" DIALING
N	WITH		
E	INTERRUPTED	10V AC BUZZER	AUDIBLE SIGNALS
X	*	105V 30HZ RINGER	
@	SINGLE SPURT †	10V AC BUZZER	
J		18V AC BUZZER	
K		DC BUZZER	
M		105V 30HZ RINGER	
W	STEADY		LINE LAMPS
H	FLASHING		
R	INTERRUPTED RING WITH STATION BUSY TONE X		USING 423A KTU

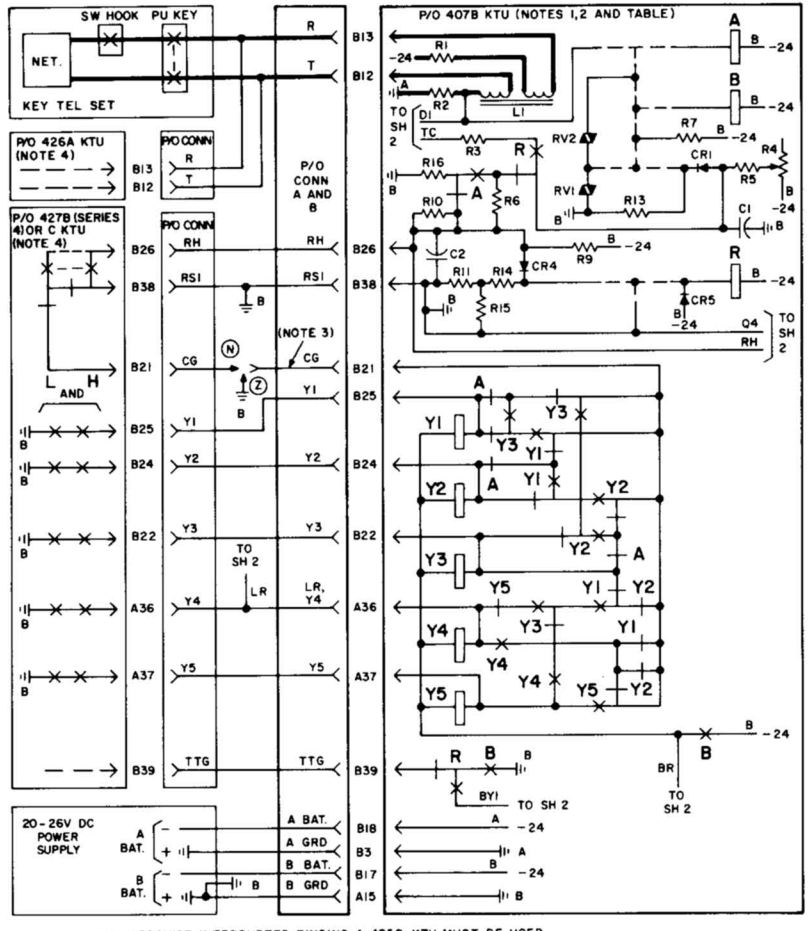

* TO PROVIDE INTERRUPTED RINGING A 425B KTU MUST BE USED.

† STATION BUSY TONE IS NOT RECOMMENDED FOR USE WITH SINGLE SPURT RINGING

Fig. 5—Condensed Functional Schematic of 407B KTU (MD) (Dial Intercom, 10-Code Selector Circuit) (Sheet 1 of 2)

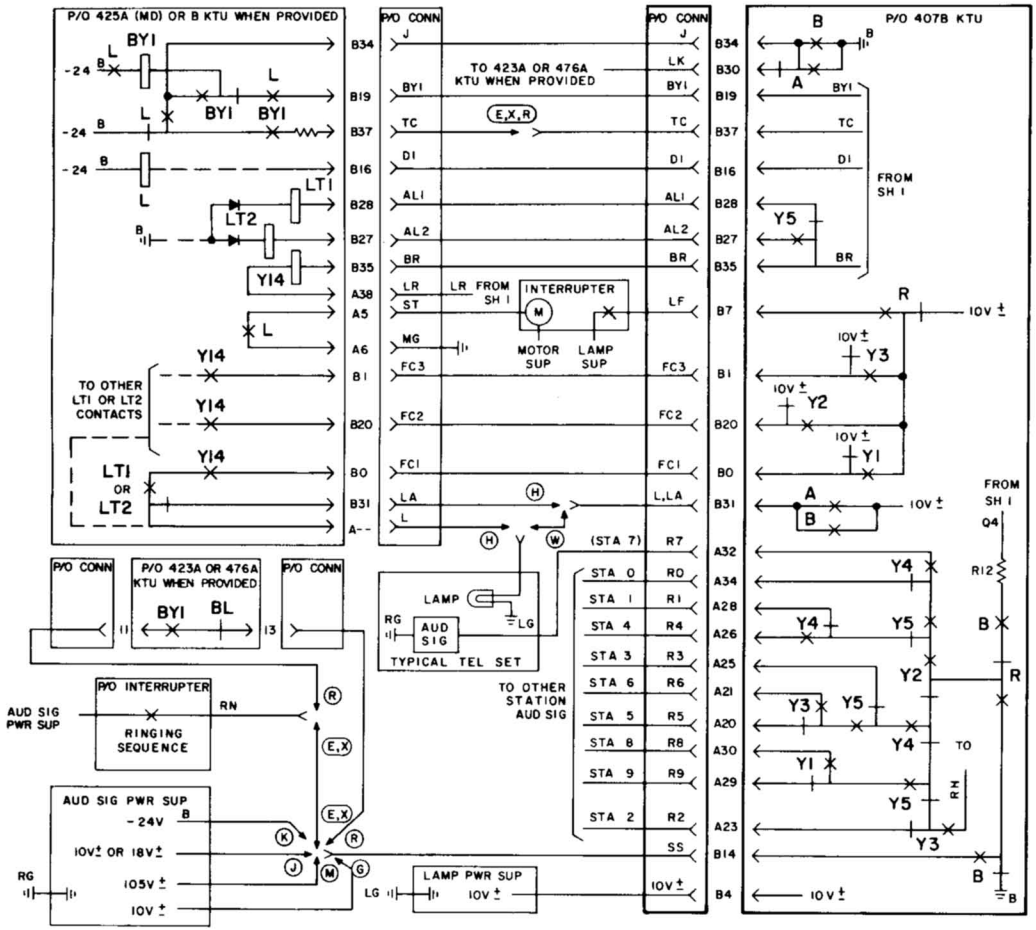

Fig. 5—Condensed Functional Schematic of 407B KTU (MD) (Dial Intercom, 10-Code Selector Circuit) (Sheet 2 of 2)

NOTES:

1. REQUIRES A MOUNTING FACILITY EQUIPPED WITH TWO 914A (40-PIN) CONNECTORS MOUNTED IN A VERTICAL PLANE.
2. RESISTOR R4 CAN BE ADJUSTED TO PROVIDE A VARIABLE TIMING CYCLE FOR THE RELEASE OF RELAY B. A TIMING CYCLE OF 1.5 SEC IS PROVIDED BY THE FACTORY. THE ADJUSTMENT OF R4 IS REVERSED FROM THE 424B KTU. TURN KNURLED WHEEL TO FULL CLOCKWISE POSITION FOR 0.5 SEC TIMEOUT. TURN COUNTERCLOCKWISE FOR TIMEOUT INTERVAL LONGER THAN 1.5 SECONDS.

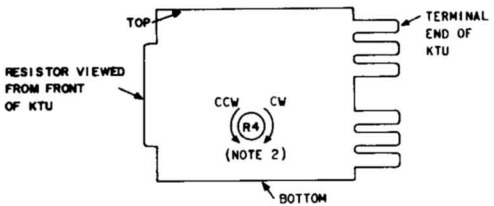

3. IF DSS IS REQUIRED, SEE FIG. 7

TABLE:

DIGIT DIALED	COUNTER RELAYS OPERATED AT END OF DIAL PULSE				
	Y1	Y2	Y3	Y4	Y5
1		●			
2	●				
3			●	●	
4		●		●	
5	●			●	●
6			●	●	●
7		●		●	●
8	●				●
9			●		●
0		●			●

4. 440A(MD) OR 478B KTU MAY BE USED TO PROVIDE "TOUCH-TONE" DIALING IN PLACE OF 426A WITH 427B (SERIES 4) OR C KTUS.

OPTIONS:

Z	WITHOUT		"TOUCH-TONE" DIALING
N	WITH		
E	INTERRUPTED *	10V AC BUZZER	AUDIBLE SIGNALS
X		105V 30HZ RINGER	
G	SINGLE SPURT †	10V AC BUZZER	
J		18V AC BUZZER	
K		DC BUZZER	
M		105V 30HZ RINGER	
W	STEADY		LINE LAMPS
H	FLASHING		
R	INTERRUPTED RING WITH * STATION BUSY TONE		USING 423A KTU

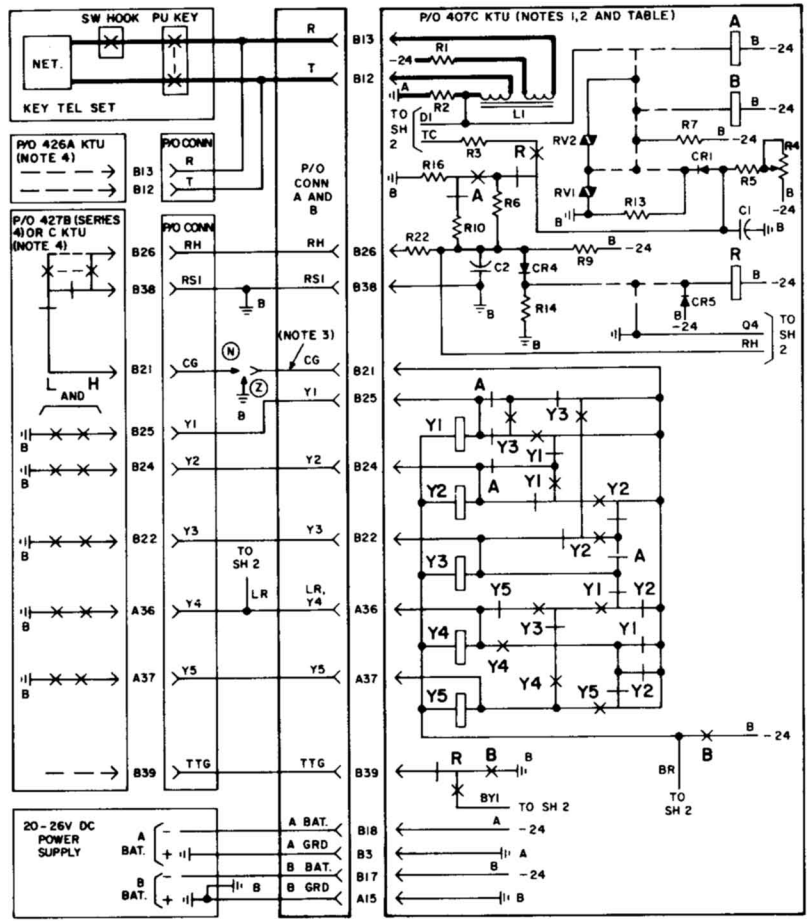

* TO PROVIDE INTERRUPTED RINGING A 425B KTU MUST BE USED

† STATION BUSY TONE IS NOT RECOMMENDED FOR USE WITH SINGLE SPURT RINGING

Fig. 6—Condensed Functional Schematic of 407C KTU (Dial Intercom, 10-Code Selector Circuit) (Sheet 1 of 2)

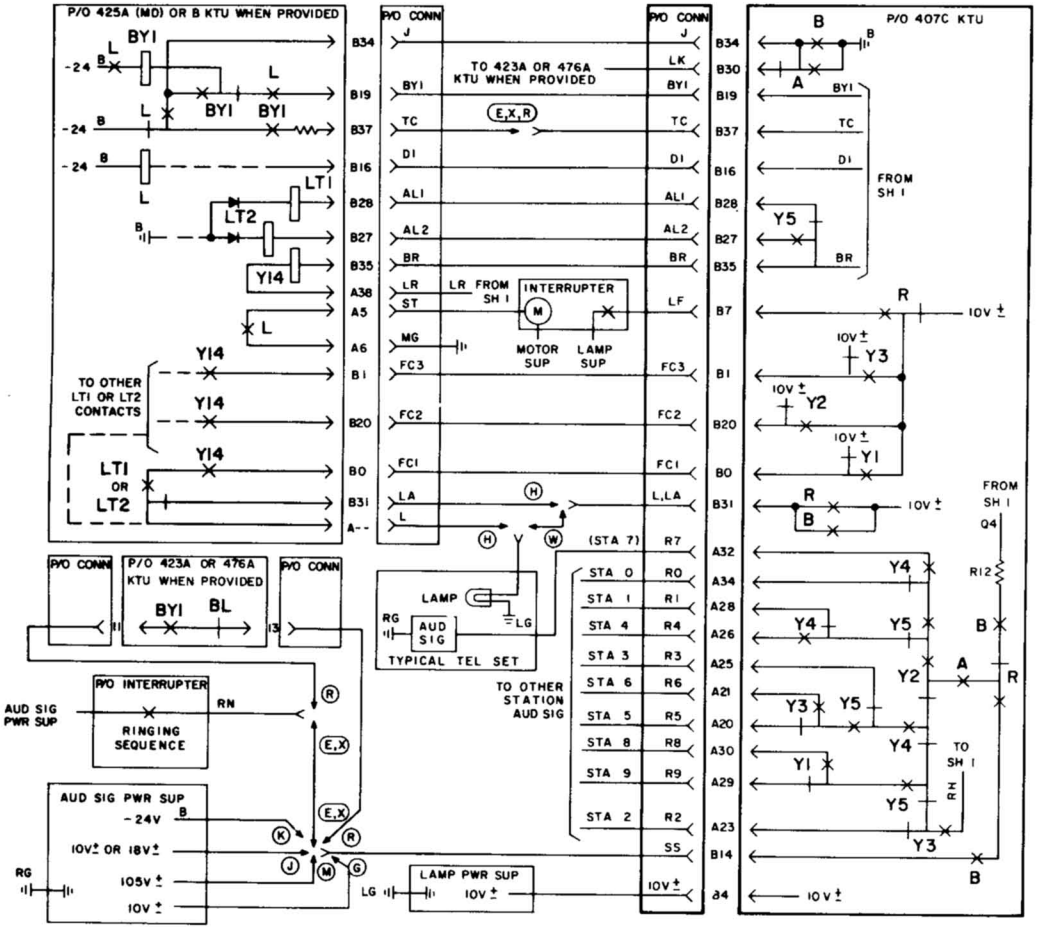

Fig. 6—Condensed Functional Schematic of 407C KTU (Dial Intercom, 10-Code Selector Circuit) (Sheet 2 of 2)

NOTES:

1. REQUIRES A MOUNTING FACILITY EQUIPPED WITH AN 18-,20-, OR 40-PIN CONNECTOR.
2. WHEN INTERCOMMUNICATING SYSTEM IS EQUIPPED WITH THE "TOUCH-TONE" ADAPTER (440A[MD] OR 478B OR 426A WITH 427B [SERIES 4] OR C KTUS) PROVIDE A 400J DIODE FOR EACH 420A KTU INSTALLED.
3. MAXIMUM STATION CONDUCTOR LOOP IS 500 OHMS. OFF-PREMISE (LONG LINE) TELEPHONE SET MAY BE EQUIPPED WITH A "TOUCH-TONE" DIAL PROVIDED THE INTERCOMMUNICATING SYSTEM IS SO EQUIPPED.
4. ANY DIGIT MAY BE ASSIGNED TO OFF-PREMISE (LONG LINE) STATION.

OPTIONS:

M	105V±	USED TO OPERATE AUD SIG OF INTERCOM SYSTEM
J	18V±	
K	-24V DC	

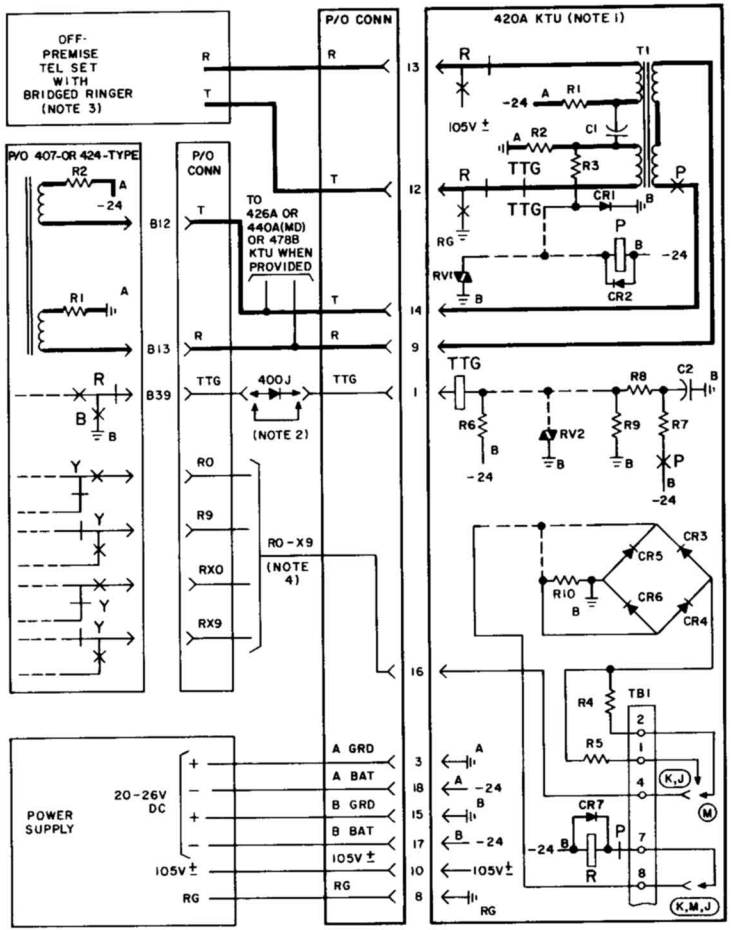

Fig. 7—Condensed Functional Schematic of 420A KTU (Long Line Circuit)

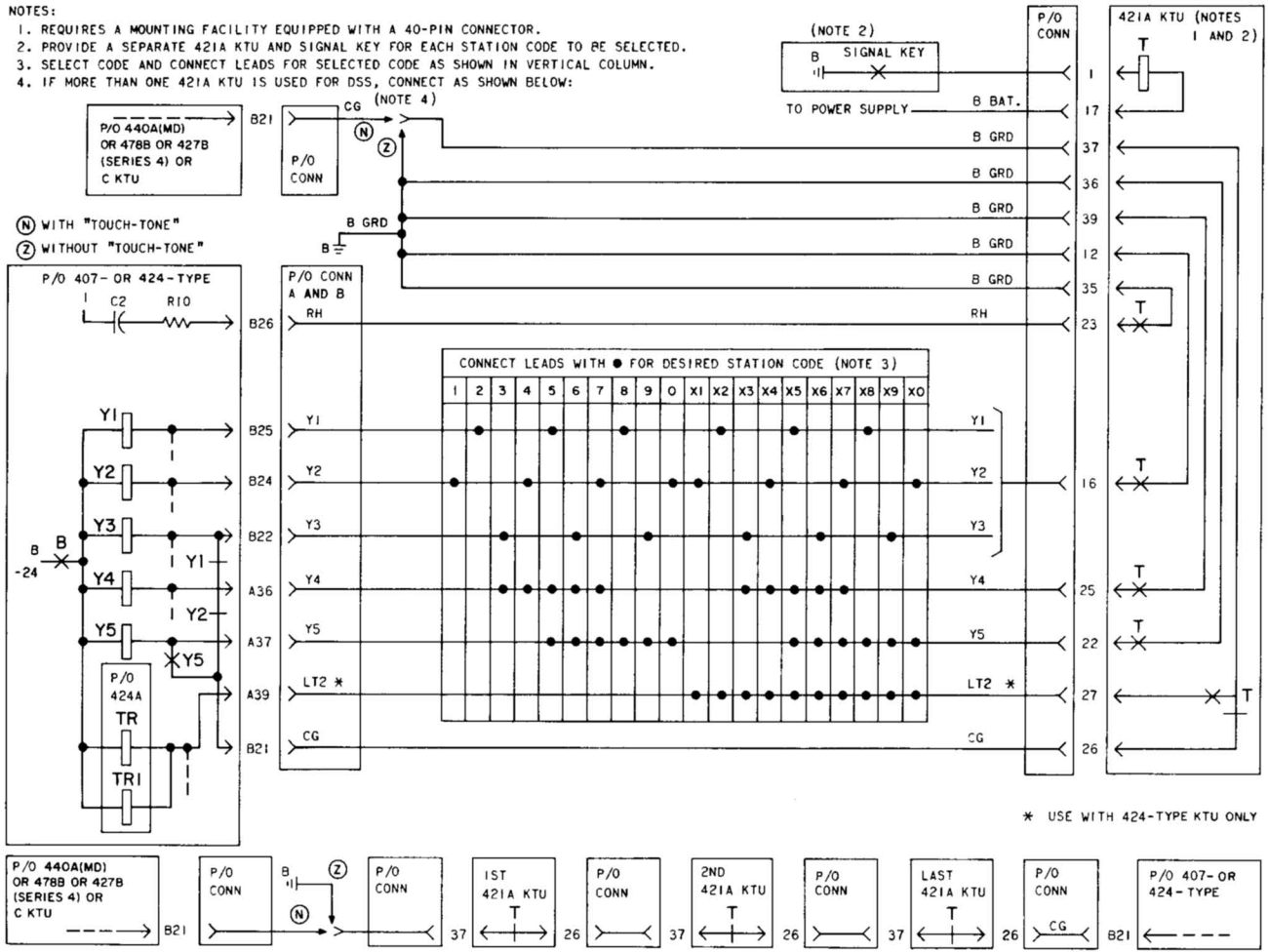

Fig. 8—Condensed Functional Schematic of 421A KTU (Wired for DSS)

NOTES:

1. THE 421A KTU REQUIRES A MOUNTING FACILITY EQUIPPED WITH A 40-PIN CONNECTOR.
2. THE 413A KTU REQUIRES A MOUNTING FACILITY EQUIPPED WITH AN 18-, 20-, OR 40-PIN CONNECTOR.
3. PROVIDE THE 413A KTU ONLY WHEN ACCESS TO THE PRESET CONFERENCE IS BY DIAL CODE OR BY DIAL CODE AND DSS. DO NOT PROVIDE THE 413A KTU WHEN ACCESS TO THE PRESET CONFERENCE IS LIMITED TO DSS.
4. REMOVE RINGER CAPACITORS FROM CIRCUIT.
5. WHEN THIS CIRCUIT IS PROVIDED, RINGING VOLTAGE (105V±) MUST BE USED TO OPERATE THE AUDIBLE SIGNALS CONNECTED TO THE DIAL INTERCOM LINE.
6. PROVIDE (W) OPTION AS SHOWN.

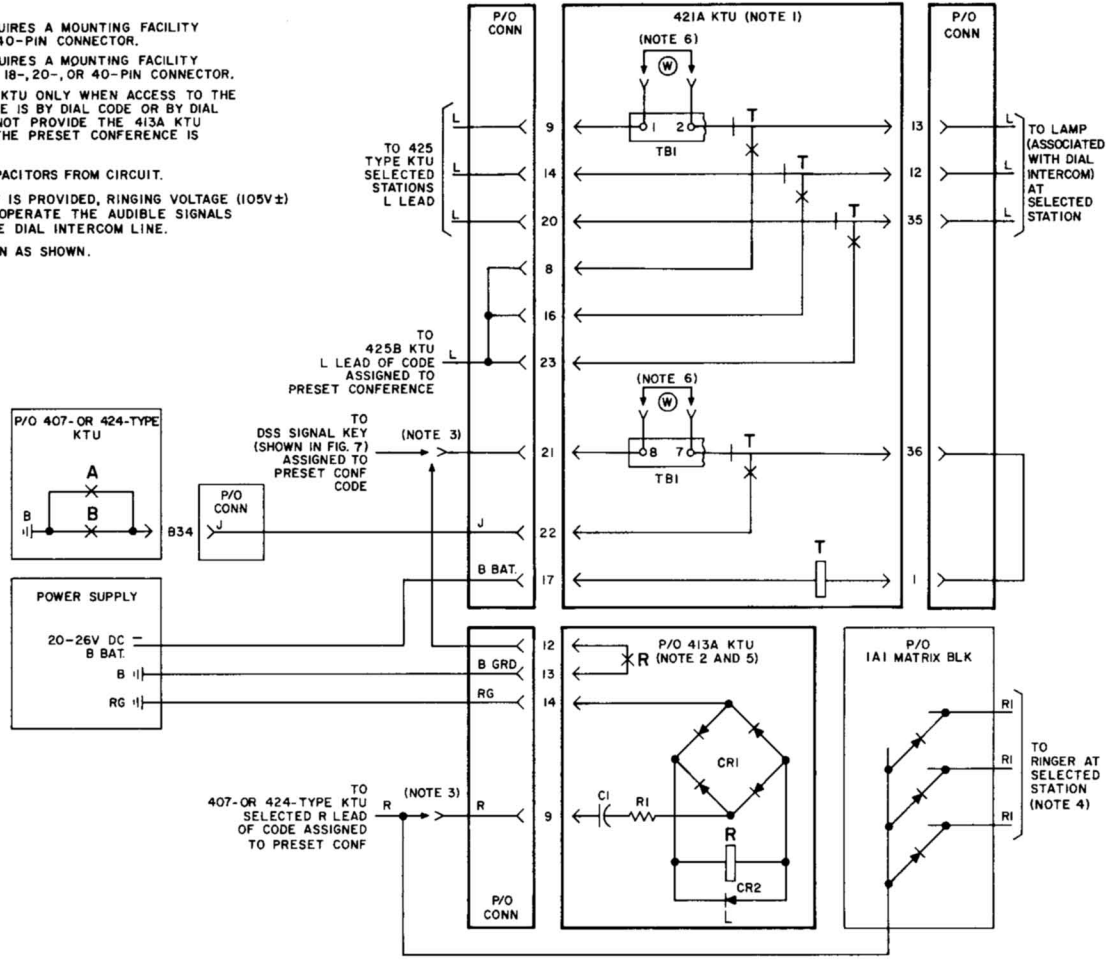

Fig. 9—Condensed Functional Schematic of 421A KTU (Wired for Preset Conference)

NOTES:

1. REQUIRES A MOUNTING FACILITY EQUIPPED WITH A 40-PIN CONNECTOR.
2. PROVIDE A SEPARATE 422B KTU FOR UNITS GROUP (1-0, SINGLE DIGIT NOS.) AND FOR THE TENS GROUP (X1-X0, TWO-DIGIT NOS.)
3. PROVIDE AND INSTALL A KS-15724,L1 DIODE IN THE TELEPHONE SET. FOR CONNECTION, USE THE STATION BUSY OPTION AS SHOWN IN THE CONNECTION SECTION OF THE TEL SET USED.
4. CONNECT TO J GROUND IF 407-TYPE KTU IS PROVIDED. CONNECT TO LT1 IF ASSOCIATED WITH UNITS GROUP OR TO LT2 IF ASSOCIATED WITH TENS GROUP.
5. REMOVE STRAP AND INSTALL 441J DIODE, PROCURE DIODE LOCALLY.

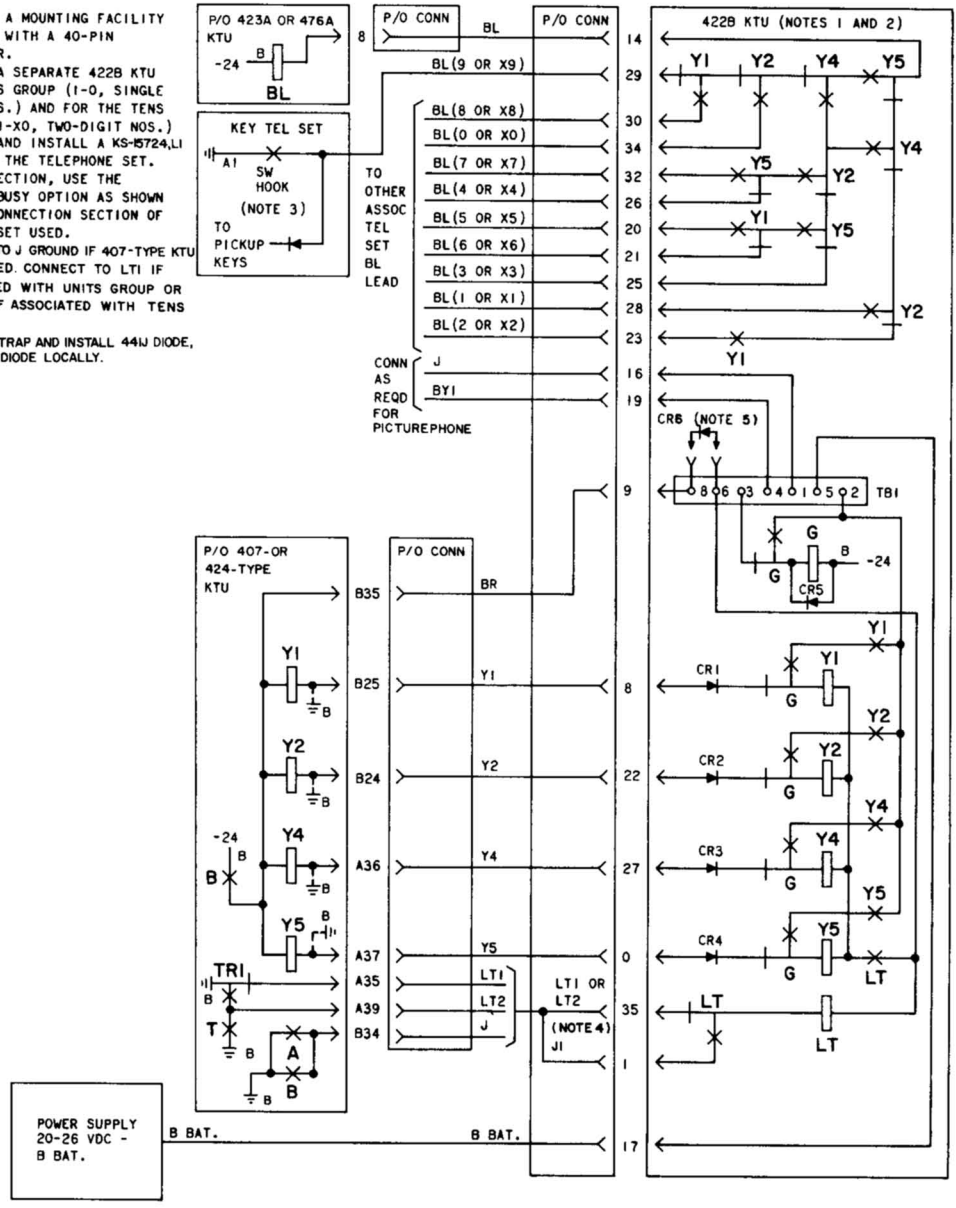

Fig. 10—Condensed Functional Schematic of 422B KTU (Station Busy Selector Circuit)

NOTES:

1. REQUIRES A MOUNTING FACILITY EQUIPPED WITH A 20- OR 40-PIN CONNECTOR.
2. WHEN ADDING DIAL TONE (T OPTION) TO A SYSTEM EQUIPPED FOR "TOUCH-TONE" (440A [MD] OR 478B OR 426A WITH 427B [SERIES 4] OR C KTUS) A 400J DIODE MUST BE INSERTED BETWEEN THE "RH" AND "LK" LEADS ON THE 407- OR 424-TYPE KTU. REWIRE AS FOLLOWS:

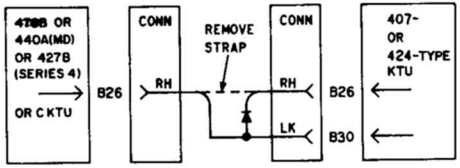

3. TURN KNURLED WHEEL TO FULL CLOCKWISE POSITION FOR MINIMUM DIAL TONE VOLUME AND TO FULL COUNTERCLOCKWISE POSITION FOR MAXIMUM DIAL TONE VOLUME.

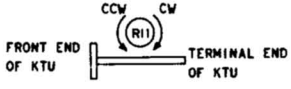

OPTIONS:

R *	STATION BUSY TONE WITH INTERRUPTED AUDIBLE SIGNAL
S	AUDIBLE RINGBACK
T	DIAL TONE

*-FACTORY PROVIDED

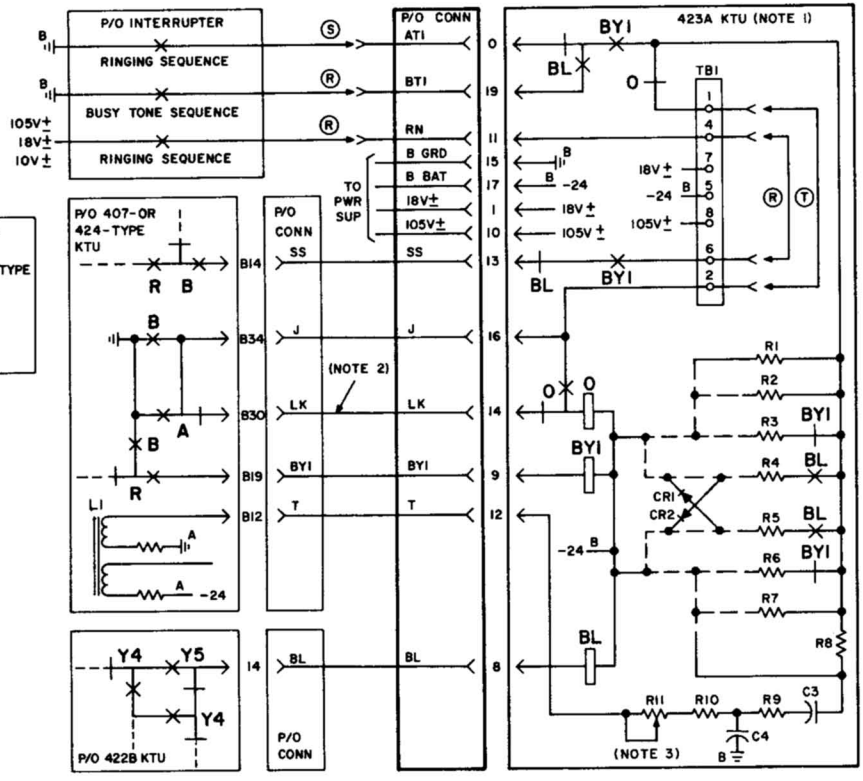

Fig. 11—Condensed Functional Schematic of 423A KTU (Dial Tone, Busy Tone, and Audible Ringback Tone)

2.08 The 423A KTU has been rerated from MD to AT&T Standard for use in nonmodular panel installations.

Note: The 423B KTU has been recoded to 476A KTU for use in modular panel installations only.

G. 424A (MD), 424B (MD), and 424C KTUs (Dial Intercom, 19-Code Selector Circuit)

2.09 The 424-type KTUs (Fig. 12) are 8-inch, 80-contact units providing the same basic features as the 407C KTU but have a capacity of 19 station codes. These KTUs provide the following:

- Rotary dial selection
- Nineteen dial codes (nine single digit and ten 2-digit).

Note: The first digit of a 2-digit code is not available as a station code.



A 424A (MD), B (MD), or C KTU can be used in a 1A2 KTS, but a 424A KTU (MD) is not to be used in place of a 424B (MD) or C KTU in the 7A or 14A Communication System. Of the 424-type KTUs, only the 424C KTU can be used with the 21A System. The 424C KTU provides a number of circuit improvements over the 424A KTU (MD) and 424B KTU (MD), such as greater tolerance to rapid TOUCH-TONE dialing and elimination of speaker clicks in COM KEY installations. Replace earlier 424-type KTUs with a 424C KTU only when customer complaints warrant.

H. 425A (MD) and 425B KTUs (Flashing Lamp Circuit)

2.10 The 425-type KTUs (Fig. 13) are 8-inch, 80-contact units that provide the control circuits for flashing lamps for up to 19 station codes in the dial selective intercom circuit. These KTUs provide the following operating features:

- Incoming call flashing lamp signal to called station
- Busy lamp signals to all other stations
- Optional interrupted ringing
- Detects when called station answers; stops interrupted ringing and flashing lamp signal
- Provides a separate switching ground for use with PICTUREPHONE® intercom (425B only).

I. 426A KTU (Amplifier, Band Separation, and Limiter Circuit)

2.11 The 426A KTU (Fig. 14) is an 8-inch, 80-contact unit comprising half of the TOUCH-TONE adapter circuit. It is used in conjunction with a 427-type KTU for TOUCH-TONE dial station selection in the 1A2 KTS dial selective intercommunicating circuit. The 426A amplifies and separates TOUCH-TONE signals into high and low frequencies for use as inputs for the 427-type KTUs. It also provides protection against false operation caused by speech or noise frequency components.

J. 427B (Series 4) and 427C KTUs (Frequency Recognition and Translation Circuit)

2.12 The 427B (Series 4) and 427C KTUs (Fig. 14) are 8-inch, 80-contact units comprising half of the TOUCH-TONE adapter circuit. These KTUs receive separated TOUCH-TONE frequencies from the 426A KTU and translate them into relay operations. The relay operations, in turn, energize relays in the basic selector circuit to signal the selected station.

K. 440A KTU (MD) (TOUCH-TONE Adapter Circuit)

2.13 The 440A KTU (MD) (Fig. 15) is an 8-inch, 80-contact unit consisting of two printed circuit boards permanently fastened together and requiring a single upper and lower connector. The circuitry and function are the same as that of the 426A and 427C KTUs, but are not electrically interchangeable in some mounting arrangements since the 426A and 427C KTUs each require an

NOTES:

1. REQUIRES A MOUNTING FACILITY EQUIPPED WITH TWO 914A (40-PIN) CONNECTORS MOUNTED IN A VERTICAL PLANE.
2. ANY SELECTED R LEAD (R1-R0) MAY BE ASSIGNED AS THE INITIAL DIGIT OF A 2-DIGIT CODE. THE R LEAD SO ASSIGNED MAY NOT BE USED FOR A STATION CODE.
3. RESISTOR R4 CAN BE ADJUSTED TO VARY THE RELEASE TIME OF RELAY B (FACTORY SET AT 1.5 SECONDS ON ALL CODES) AS FOLLOWS:
   424A AND 424B-TURN KNURLED WHEEL FULL COUNTERCLOCKWISE (CCW) FOR 0.5 SECOND TIMEOUT. TURN CLOCKWISE (CW) FOR INTERVAL LONGER THAN 1.5 SECONDS. AT FULL CW POSITION CYCLE MAY BE VERY LONG AND B RELAY MAY NOT RELEASE.
   424C-ADJUSTMENT OF R4 IS REVERSED ON 424C FROM 424A/B. TURN WHEEL FULL CW FOR 0.5 SECOND TIMEOUT. TURN CCW FOR TIMING LONGER THAN 1.5 SECONDS.

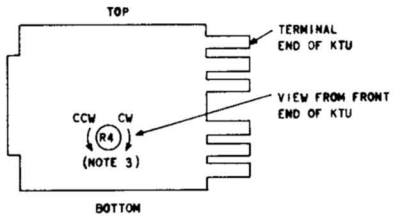

4. CONNECT LT1 TO 422B KTU ASSOCIATED WITH UNITS GROUP AND CONNECT LT2 TO 422B KTU ASSOCIATED WITH TENS GROUP.
5. IF DSS IS REQUIRED, SEE FIG. 7.
6. 440A(MD) OR 478B KTU MAY BE USED TO PROVIDE TOUCH DIALING IN PLACE OF 426A WITH 427B (SERIES 4) OR C KTUS.

OPTIONS:

Z	WITHOUT		"TOUCH-TONE" DIALING
N	WITH		
E	INTERRUPTED *	10V AC BUZZER	AUDIBLE SIGNALS
X		105V 30 HZ RINGER	
R	INTERRUPTED RING WITH STATION BUSY TONE †		USING 423A KTU
G	SINGLE SPURT †	10V AC BUZZER	
J		18V AC BUZZER	
K		DC BUZZER	
M		105V 30 HZ RINGER	
W	STEADY		LINE LAMPS
V	FLASHING		

* TO PROVIDE INTERRUPTED RINGING A 425B KTU MUST BE USED.
† STATION BUSY TONE IS NOT RECOMMENDED FOR USE WITH SINGLE SPURT RINGING.

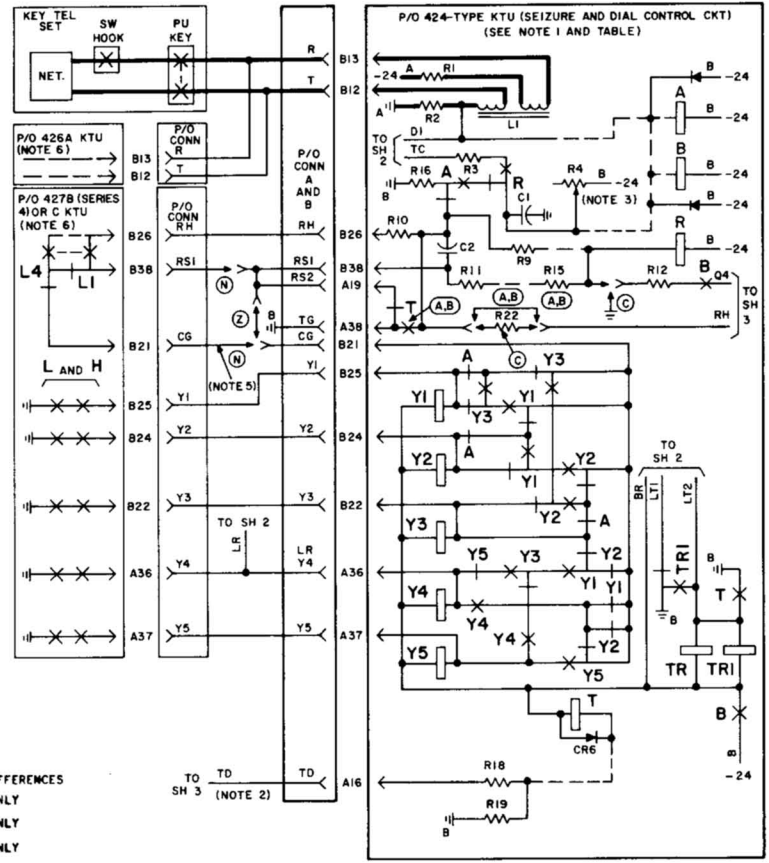

WIRING DIFFERENCES
(A) 424A ONLY
(B) 424B ONLY
(C) 424C ONLY

Fig. 12—Condensed Functional Schematic of 424-Type KTU (Dial Intercom, 19-Code Selector Circuit) (Sheet 1 of 3)

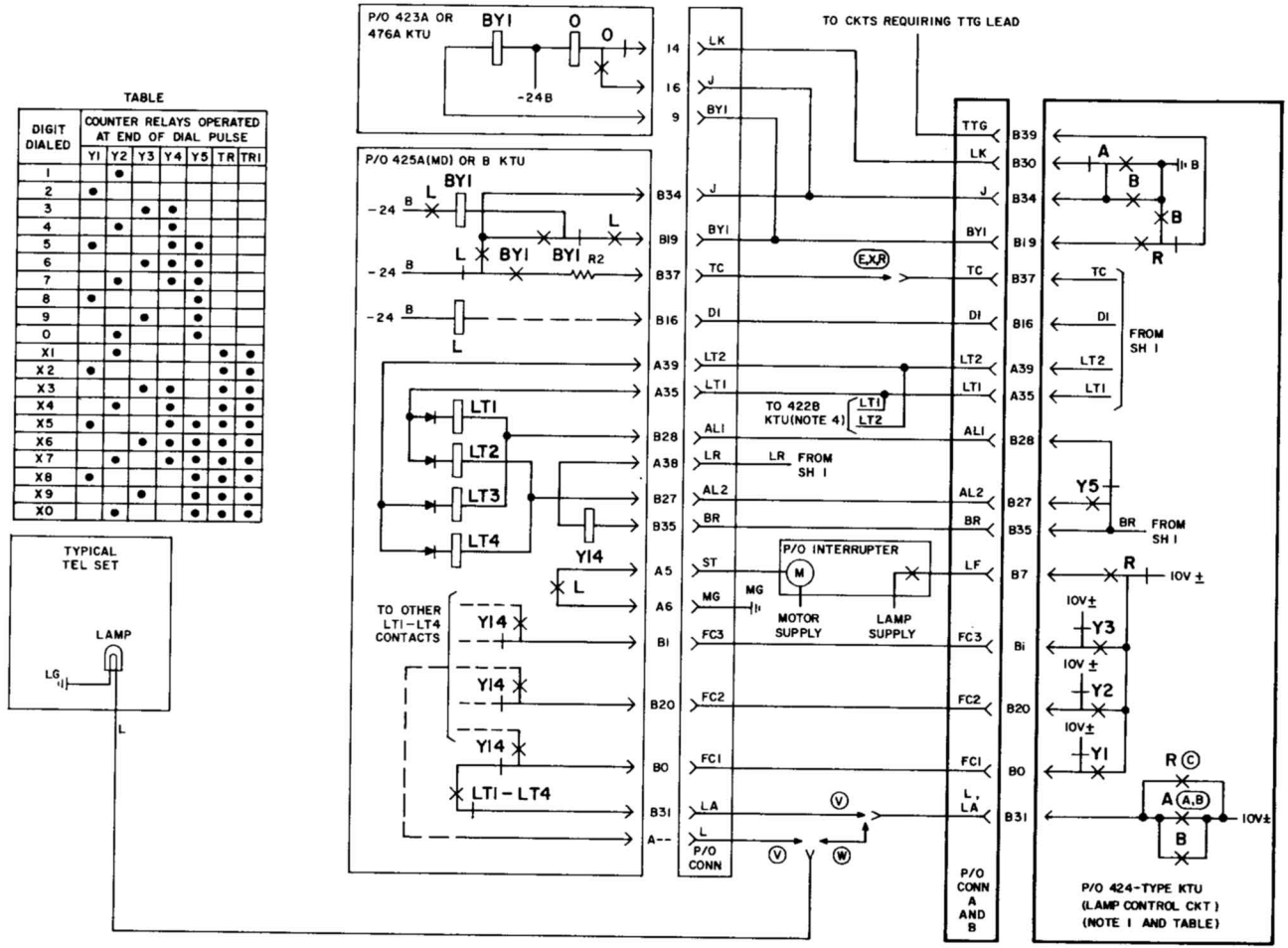

Fig. 12—Condensed Functional Schematic of 424-Type KTU (Dial Intercom, 19-Code Selector Circuit) (Sheet 2 of 3)

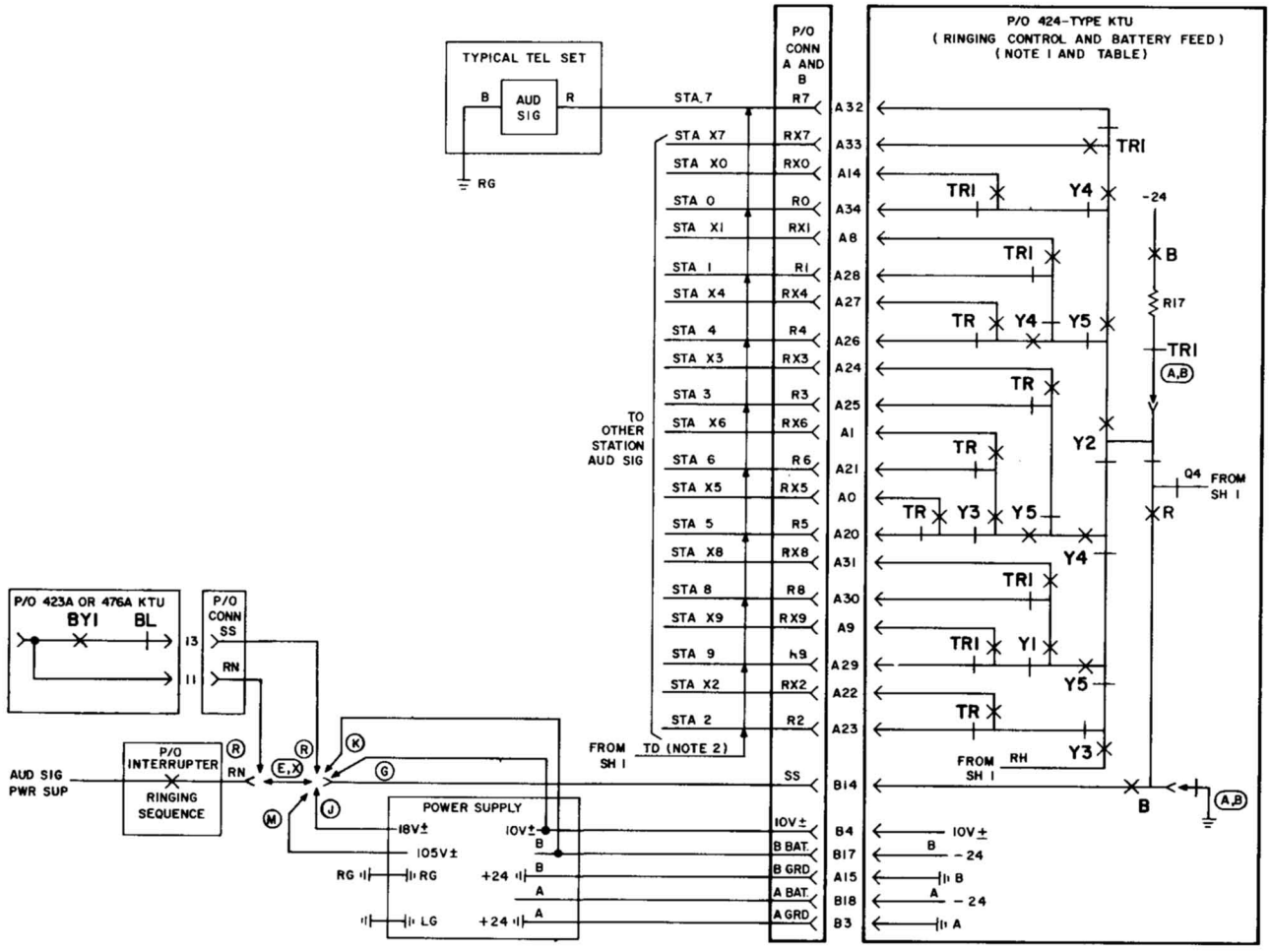

Fig. 12—Condensed Functional Schematic of 424-Type KTU (Dial Intercom, 19-Code Selector Circuit) (Sheet 3 of 3)

NOTES:
1. REQUIRES A MOUNTING FACILITY EQUIPPED WITH TWO 914A (40-PIN) CONNECTORS MOUNTED IN A VERTICAL PLANE.
2. THE 425A (MD) AND B KTUS ARE THE ONLY KTUS TO PROVIDE INTERRUPTER START CONTROL FOR ALL FUNCTIONS OF THE 1A2 DIAL INTERCOMMUNICATING SYSTEM.

OPTIONS:

X	INTERRUPTED 105V AC RINGER	
V	FLASHING LAMPS	USING 424-TYPE KTU
H		USING 407-TYPE KTU
R	INTERRUPTED RING WITH STATION BUSY TONE	USING 423A KTU

TABLE:

STA LAMP LEAD*	RELAYS OPERATED AT END OF PULSE TRAIN									
	407 OR 424					425A OR B				
	Y1	Y2	Y3	Y4	Y5	LT1	LT2	LT3	LT4	Y14
L1		●				●				
L2	●					●				
L3			●	●		●				●
L4		●		●		●				●
L5	●			●	●		●			●
L6			●	●	●		●			●
L7		●		●	●		●			●
L8	●				●		●			
L9			●		●		●			
L0		●			●		●			
LX1		●						●		
LX2	●							●		
LX3			●	●				●		●
LX4		●		●				●		●
LX5	●			●	●				●	●
LX6			●	●	●				●	●
LX7		●		●	●				●	●
LX8	●				●				●	
LX9			●		●				●	
LX0		●			●				●	

407-TYPE

424-TYPE

* NUMBER DESIGNATES STATION ASSIGNMENT. X IS FIRST DIGIT OF TWO-DIGIT CODE, WHICH CAN BE ANY DIGIT 1-0. DIGIT SO ASSIGNED, CANNOT BE A SINGLE DIGIT STATION CODE.

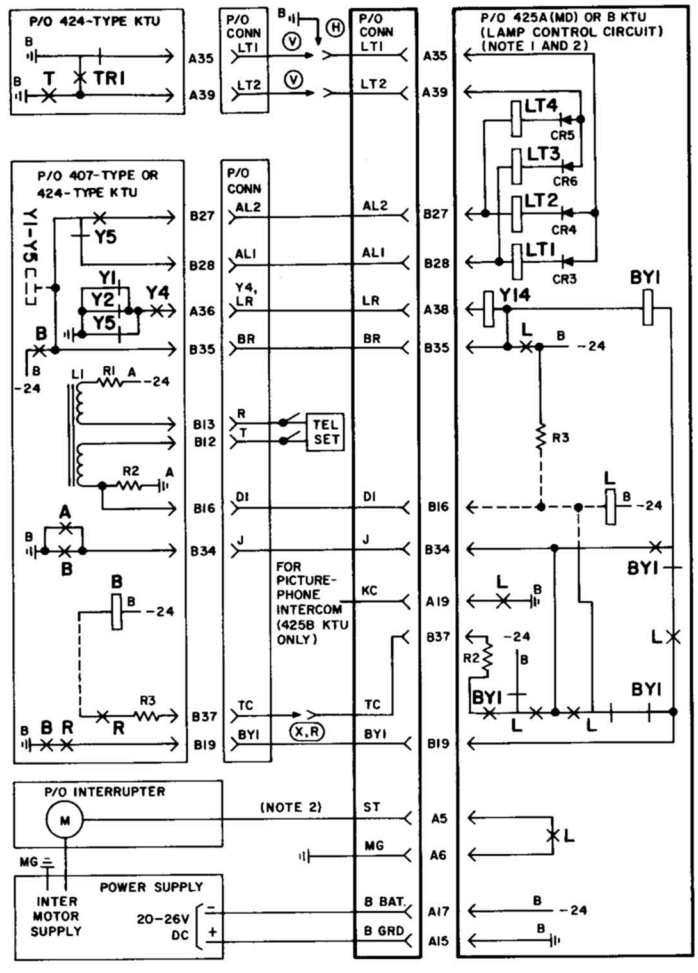

Fig. 13—Condensed Functional Schematic of 425A (MD) and 425B KTUs (Flashing Lamp Circuit) (Sheet 1 of 2)

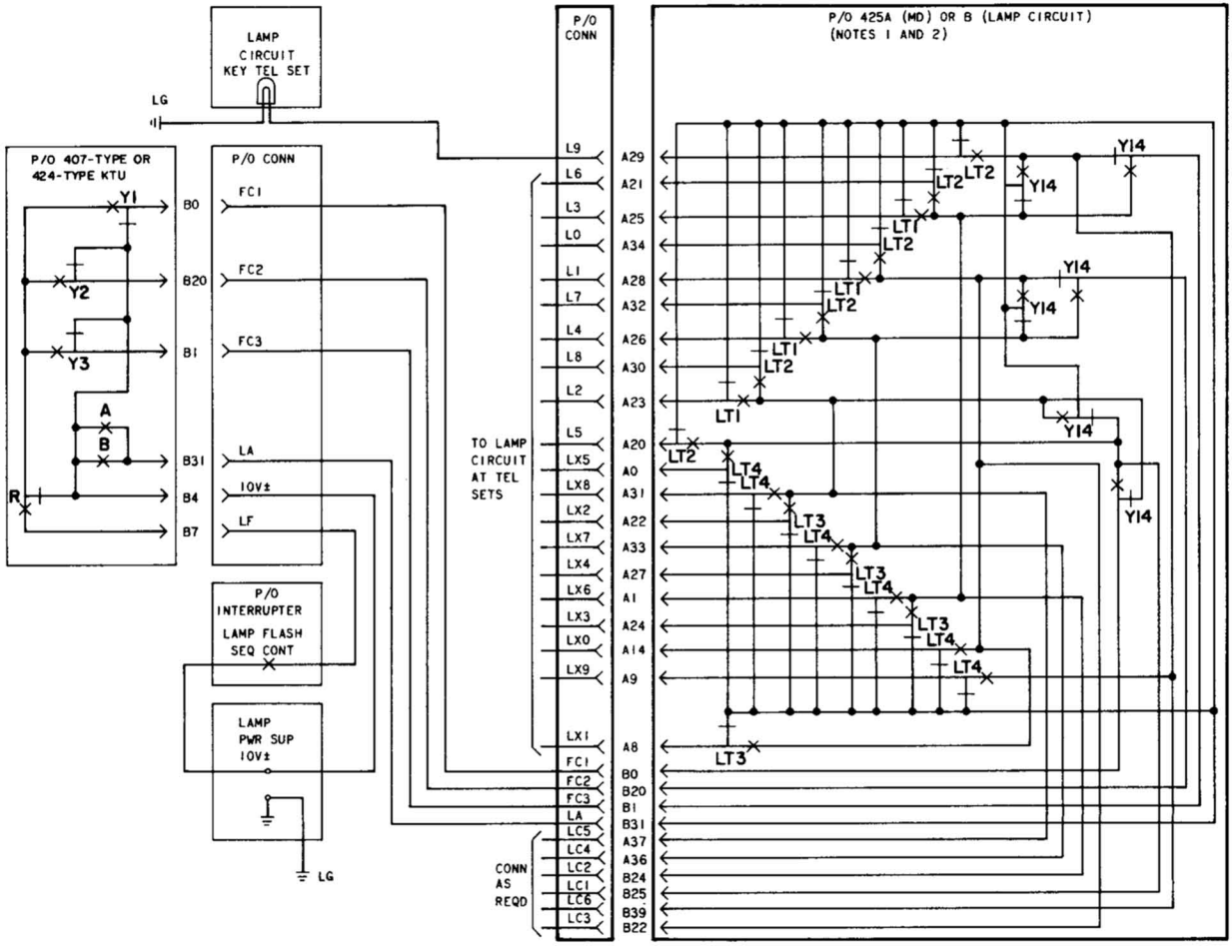

Fig. 13—Condensed Functional Schematic of 425A (MD) and 425B KTUs (Flashing Lamp Circuit) (Sheet 2 of 2)

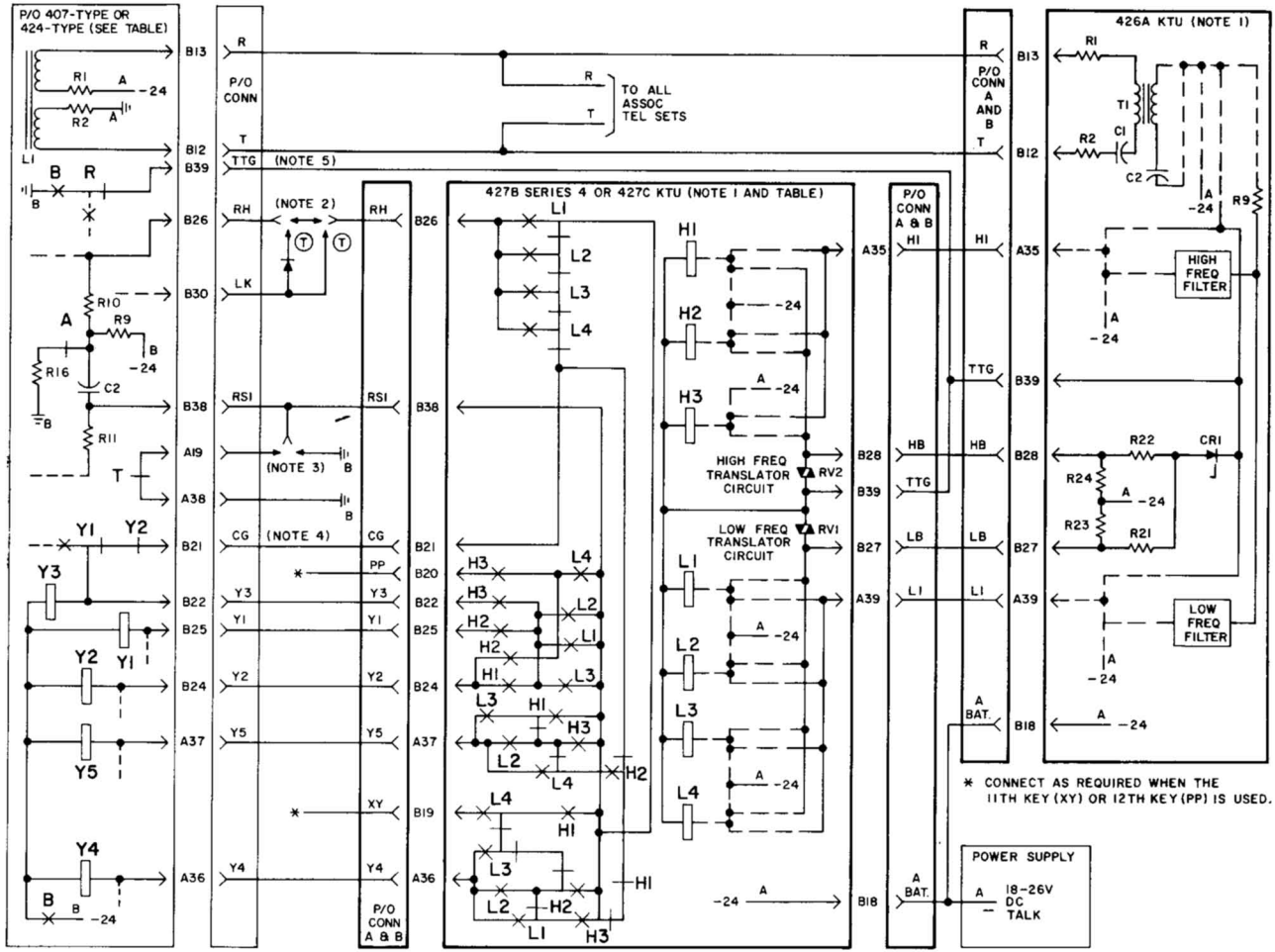

Fig. 14—Condensed Functional Schematic of 426A KTU (Amplifier, Band Separation, and Limiter Circuit) and 427B (Series 4) or 427C KTU (Frequency Recognition and Translation Circuit) (Sheet 1 of 2)

DIGIT DIALED †	1	2	3	4	5	6	7	8	9	0
HIGH AND LOW FREQ GENERATED BY TT DIAL	1209 697	1336 697	1477 697	1209 770	1336 770	1477 770	1209 852	1336 852	1447 852	1336 941
RELAYS OPERATED IN 427B, SERIES 4 OR 427C KTU	H1,L1	H2,L1	H3,L1	H1,L2	H2,L2	H3,L2	H1,L3	H2,L3	H3,L3	H2,L4
CTR RELAYS OPRD IN 407-TYPE OR 424-TYPE	Y2	Y1	Y3,Y4	Y2,Y4	Y1,Y4,Y5	Y3,Y4,Y5	Y2,Y4,Y5	Y1,Y5	Y3,Y5	Y2,Y5

NOTES:

1. EACH 426A AND 427B, SERIES 4 OR 427C KTU REQUIRES TWO 914A (40-PIN) CONNECTORS MOUNTED IN A VERTICAL PLANE.
2. T WIRING MUST BE FURNISHED ON A SYSTEM EQUIPPED WITH DIAL TONE USING A 423A KTU. DIODE IS A 400J AND MUST BE PROVIDED LOCALLY. DIODE IS NOT REQUIRED IF DIAL TONE IS PROVIDED BY A 423B KTU.
3. GROUND IS PROVIDED DIRECTLY TO THE RSI LEAD WHEN THE 407-TYPE KTU IS USED AND THROUGH A T RELAY CONTACT WHEN THE 424-TYPE KTU IS USED.
4. WHEN THE 427B, SERIES 4 OR 427C IS ADDED TO AN EXISTING SYSTEM REMOVE GROUND FROM B21 OF THE 407B KTU OR REMOVE STRAP FROM B21 TO A19 OF THE 424A KTU.
5. WHEN ADDING THE 426A AND 427B, SERIES 4 OR 427C KTU'S TO AN EXISTING SYSTEM EQUIPPED WITH A 420A KTU, A DIODE MUST BE INSTALLED IN THE TTG LEAD CONNECTING TO THE 420A KTU. SEE FIGURE 6.
6. IF DSS IS REQUIRED, SEE FIG. 7.

† SINGLE-DIGIT CODE OR 1ST OR 2ND DIGIT OF TWO-DIGIT CODE.

Fig. 14—Condensed Functional Schematic of 426A KTU (Amplifier, Band Separation, and Limiter Circuit) and 427B (Series 4) or 427C KTU (Frequency Recognition and Translation Circuit) (Sheet 2 of 2)

upper and lower connector. The 440A KTU (MD) is replaced by the 478B KTU.

L. ▶444-Type KTU (Selector Extender Circuit)

2.14 The 444-type KTU (Fig. 16) is an 8-inch, 80-contact unit which expands the 19 codes of the 424-type KTU (19-code selector circuit) to a total of 37 codes. The 444B KTU is the same as the 444A except two option plugs have been added which have application only in the 21A Communication System. In other systems, the 444B KTU should be used as supplied from the factory, ie, with the option plugs in positions 2-3 and 5-6. When using the 444-type KTU, two more transfer digits are factory assigned and these digits may not be used as station codes. Digits 2 and 3 are used as the second and third transfer digits.

M. 454-Type KTU (3-Path Intercom Access Circuit)

2.15 The 454-type KTU (Fig. 17) is an 8-inch unit that contains three separate intercom paths. Path selection is based on operation of an associated intercom button on the key telephone sets. The 454-type KTU also provides dial tone, seizes the code selector, and provides flashing lamp signal during selection and steady lamp during busy mode.

N. 460-Type KTU (2-Path Intercom Access Circuit)

2.16 The 460-type KTU (Fig. 18) is an 8-inch unit that contains two separate intercom paths. Path selection is based on operation of the associated intercom button on the key telephone sets. The unit also provides dial tone, seizes the selector, and provides a flashing lamp signal during selection and a steady lamp during the busy mode. Control circuitry permits only one intercom path to seize the selector at a time.◀

O. 476A KTU (Dial Tone, Busy Tone, and Audible Ringback Tone Circuit)

2.17 The 476A KTU (Fig. 19) is a 4-inch, 20-contact unit that provides a variable rate multivibrator to produce dial tone, station busy tone, or audible ringback tone for the dial selective intercom line circuit in modular panel installations. To provide busy tone and audible ringback tone, the multivibrator is controlled by the RN and lamp flash leads. For all tone signals, the output of the multivibrator is returned to the originating station over the tip side of the intercom line.

2.18 The 476A KTU provides the following features:

- Eliminates externally wired interrupter or relay
- Uses existing RN and LF leads for control.



The 476A KTU should be used in modular panel installation only.

P. 478B KTU (TOUCH-TONE Adapter Circuit)

2.19 The 478B KTU (Fig. 20) is an 8-inch, 80-contact solid state unit which provides the same functions as the 440A KTU (MD). It will work with all 407- and 424-type selector circuits. The 478B KTU requires both A and B grounds; provisions are made by means of either a wiring kit or an option plug for installing the necessary grounds when they are not present in the mounting arrangement. The 478B KTU is directly interchangeable with the 440A KTU (MD) when the connectors have A and B grounds.

Q. 494A KTU (TOUCH-TONE Selector Circuit)

2.20 The 494A KTU (Fig. 21) provides basic TOUCH-TONE intercom features in a single 8-inch, 80-contact, solid-state unit. It utilizes the same mounting slot in 1A2 key service units and panels as 407- and 424-type KTUs, or the 702B KTU panel only in COM KEY 2152. The 494A KTU provides:

- TOUCH-TONE dial selection of up to 19 station codes, including 0, 2 through 9, and 10 through 19.
- Single-spurt signaling using 10-volts ac buzzers or -24 volts dc signaling devices. Signaling duration is nonadjustable and preset at nominal 1.5 seconds duration.
- Control for intercom line busy lamps.
- Capability for expansion to 37 codes, 55 codes, and multipath intercom (COM KEY ▶and 626A modular panel)◀ arrangements with the 444-, 454-, and 460-type KTUs.

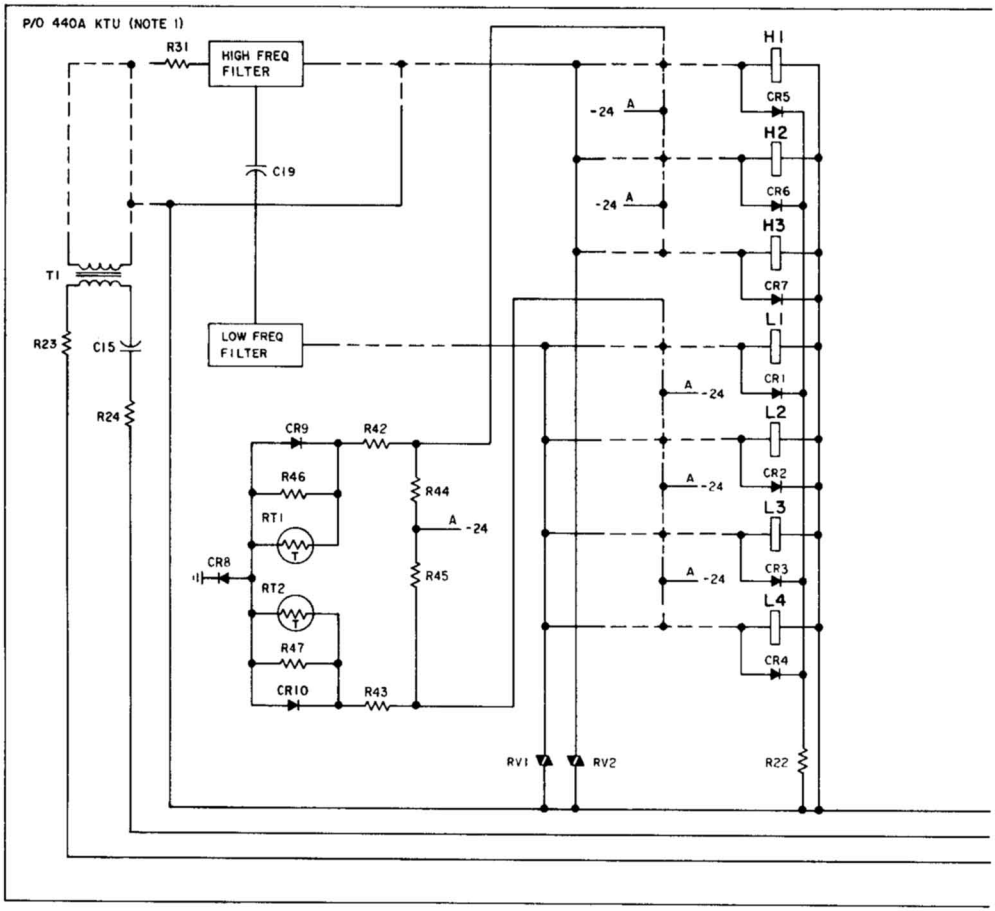

DIGIT DIALED *	1	2	3	4	5	6	7	8	9	0
HIGH AND LOW FREQ GENERATED BY TT DIAL	1209 697	1336 697	1477 697	1209 770	1336 770	1477 770	1209 852	1336 852	1477 852	1336 941
RELAYS OPRD IN 440 A KTU	H1,L1	H2,L1	H3,L1	H1,L2	H2,L2	H3,L2	H1,L3	H2,L3	H3,L3	H2,L4
CTR RELAYS OPRD IN 407B OR 424A	Y2	Y1	Y3,Y4	Y2,Y4	Y1,Y4,Y5	Y3,Y4,Y5	Y2,Y4,Y5	Y1,Y5	Y3,Y5	Y2,Y5

NOTES:
1. REQUIRES A MOUNTING FACILITY EQUIPPED WITH A 80-PIN CONNECTOR.
2. WHEN THE 440A KTU IS ADDED TO AN EXISTING SYSTEM REMOVE GROUND FROM B21 OF THE 407-TYPE KTU OR REMOVE STRAP FROM B21 TO A19 OF THE 424-TYPE KTU.
3. GROUND IS PROVIDED DIRECTLY TO THE RS1 LEAD WHEN THE 407B-TYPE KTU IS USED AND THROUGH A T RELAY CONTACT WHEN THE 424A-TYPE KTU IS USED.
4. T WIRING MUST BE FURNISHED ON A SYSTEM EQUIPPED WITH DIAL TONE. DIODE IS A 400J AND MUST BE PROVIDED LOCALLY.
5. WHEN ADDING THE 440A KTU TO AN EXISTING SYSTEM EQUIPPED WITH A 420A KTU, A DIODE MUST BE INSTALLED IN THE TTG LEAD CONNECTING TO THE 420A KTU. SEE FIGURE 7.

* SINGLE-DIGIT CODE OR 1ST OR 2ND DIGIT OF TWO-DIGIT CODE.

Fig. 15—Condensed Functional Schematic of 440A KTU (MD) (TOUCH-TONE Adapter Circuit) (Sheet 1 of 2)

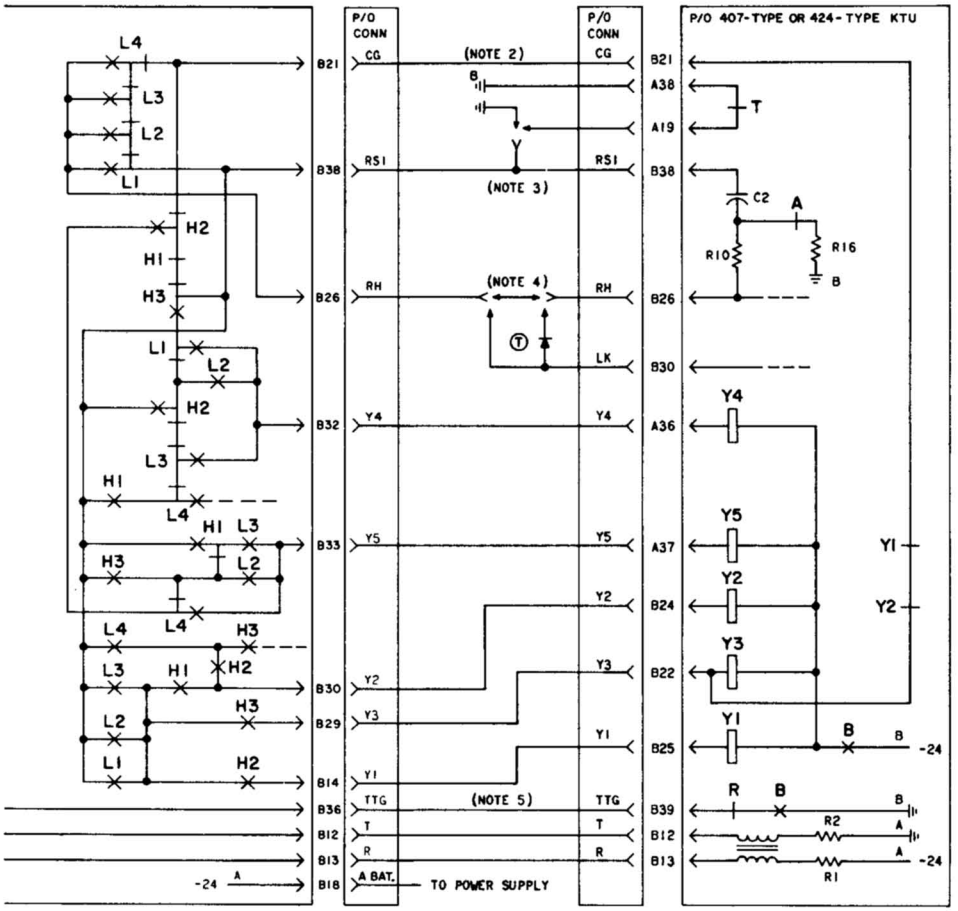

Fig. 15—Condensed Functional Schematic of 440A KTU (MD) (TOUCH-TONE Adapter Circuit) (Sheet 2 of 2)

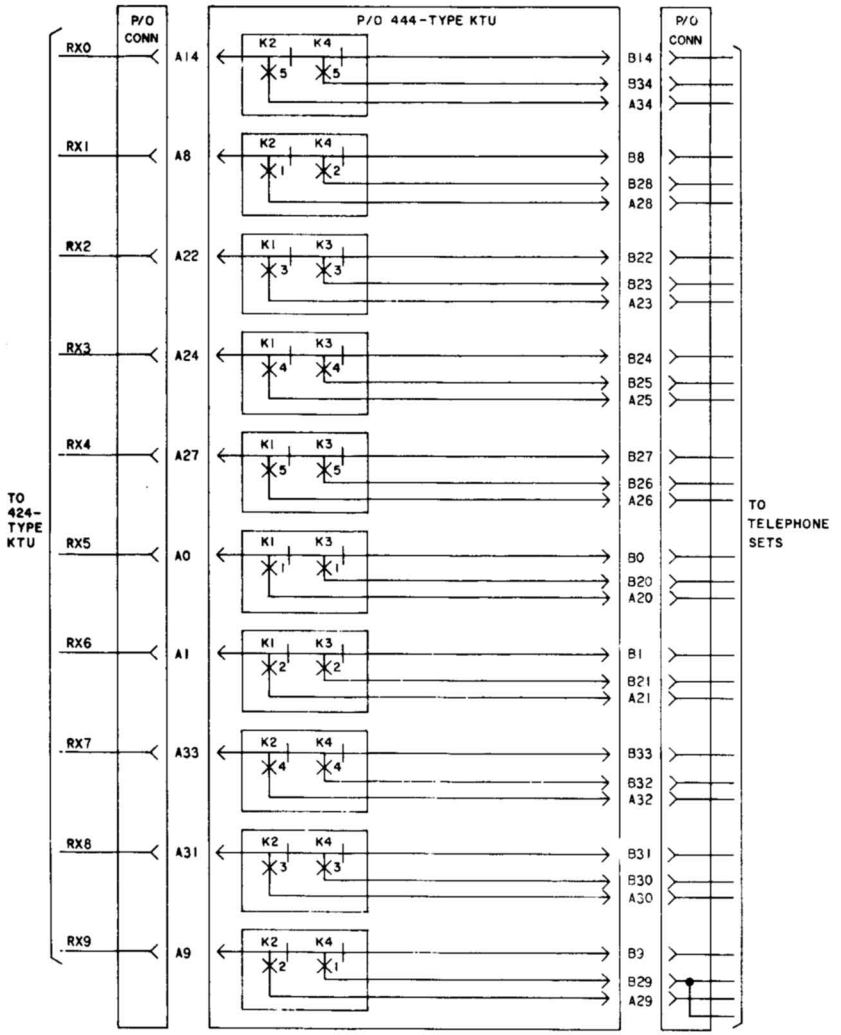

Fig. 16—Condensed Functional Schematic of 444-Type KTU (Selector Extender Circuit) (Sheet 1 of 2)



Deluxe intercom features, including flashing lamps at called stations, audible ringback and busy tone, cannot be provided.

2.21 Lead connections are the same as for the 424C KTU except that an additional pair of tip and ring contacts are available for use in COM KEY 2152.

2.22 The initial digit 1 is always treated as the first digit of a 2-digit code; therefore, no strapping of a transfer digit is required for basic 19-code selector operation. Digits 2, 3, 4, and/or 5 may be used as transfer digits when operation

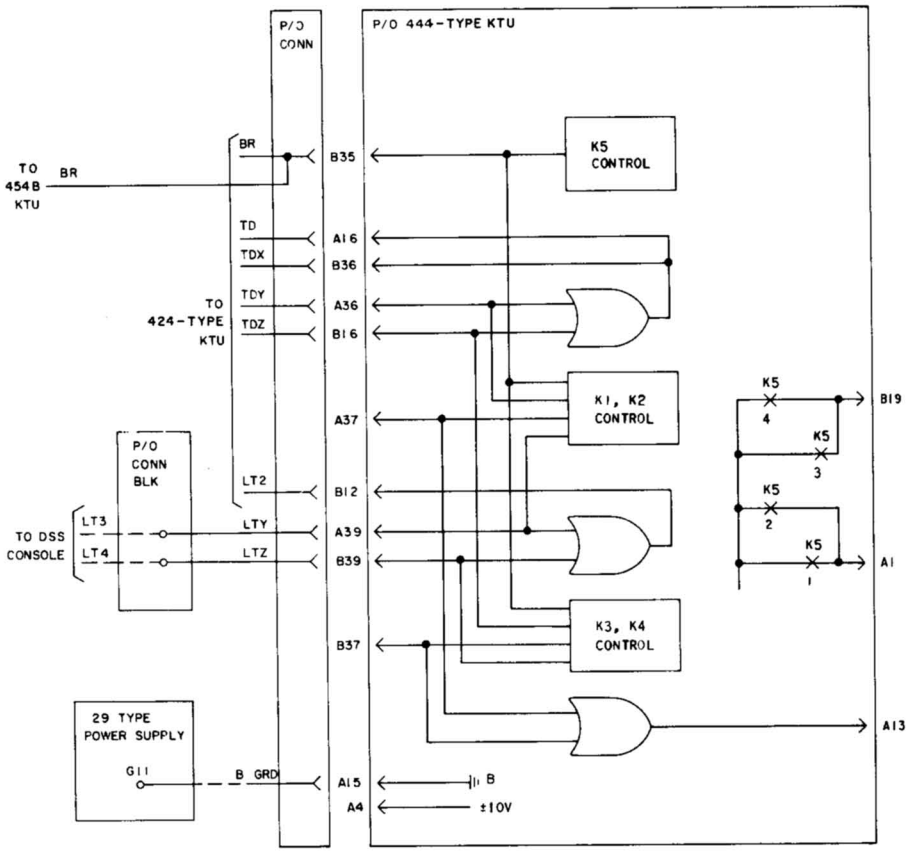

Fig. 16—Condensed Functional Schematic of 444-Type KTU (Selector Extender Circuit) (Sheet 2 of 2)

is extended to 37 or 55 codes using the 444-type KTU (selector extender).

Note: Once selected, the first digit of a 2-digit code is not available as a single-digit station code.

2.23 Screw switches S1 and S2 must be in the open position to disconnect the internal battery feed circuit for button-per-path intercom arrangements, eg, COM KEY, or 626A modular panel (option FW or S). Single path 1A2 intercoms require S1 and S2 switches be closed.

Warning: Failure to open S1 and S2 switches in button-per-path arrangements may cause damage to 494A CP.

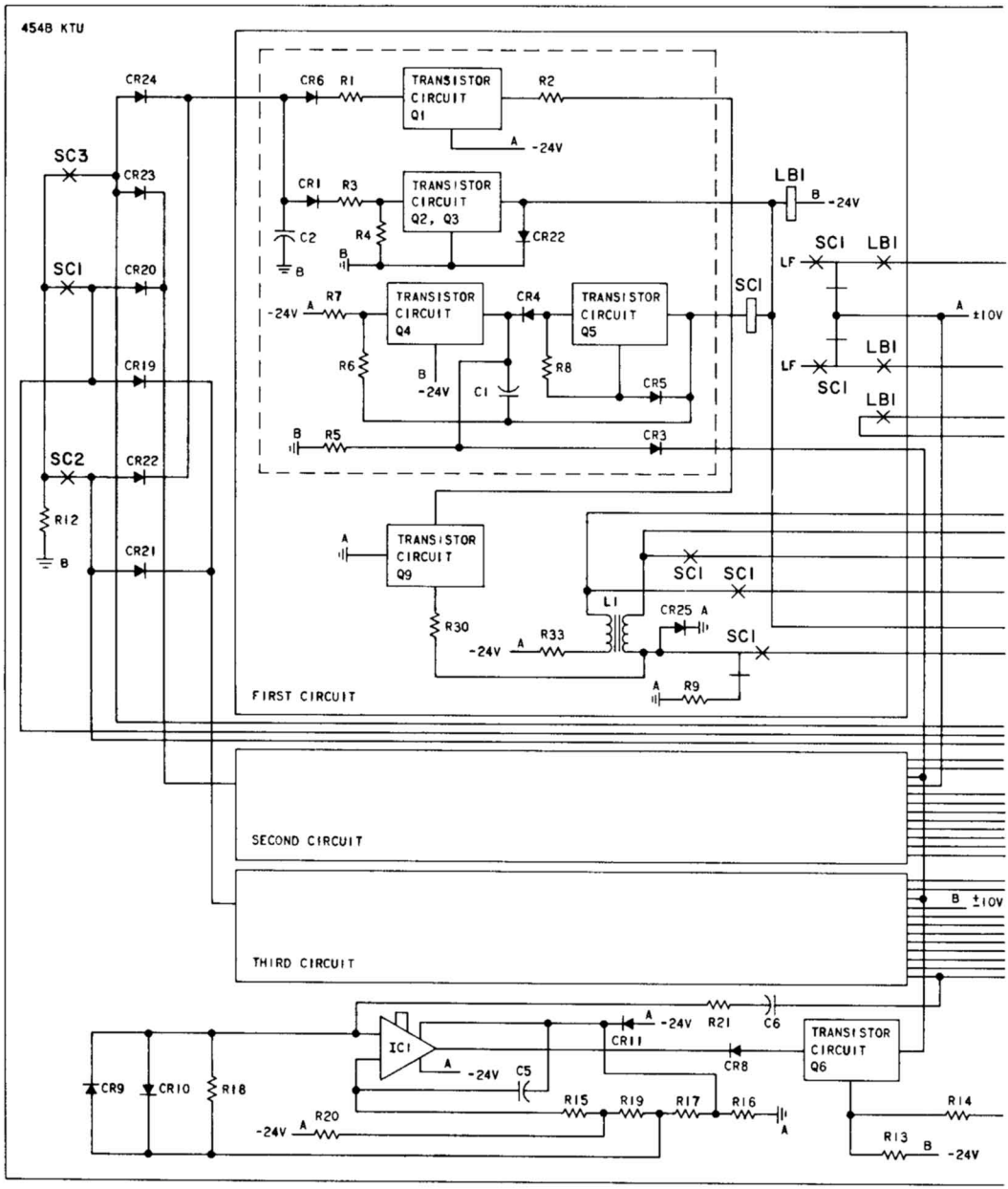

Fig. 17—Condensed Functional Schematic of 454-Type KTU (3-Path Intercom Access Circuit) (Sheet 1 of 2)

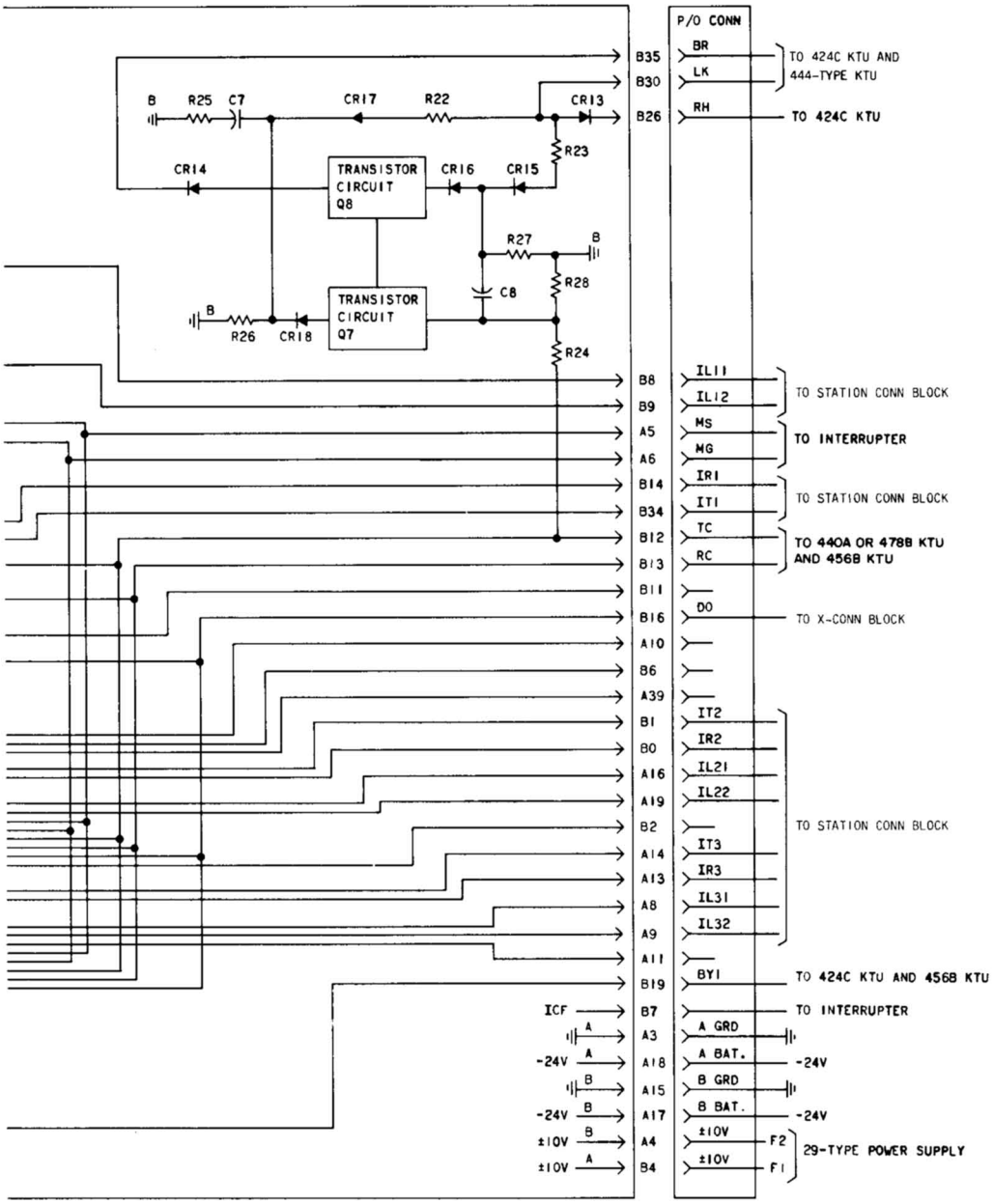

Fig. 17—Condensed Functional Schematic of 454-Type KTU (3-Path Intercom Access Circuit) (Sheet 2 of 2)

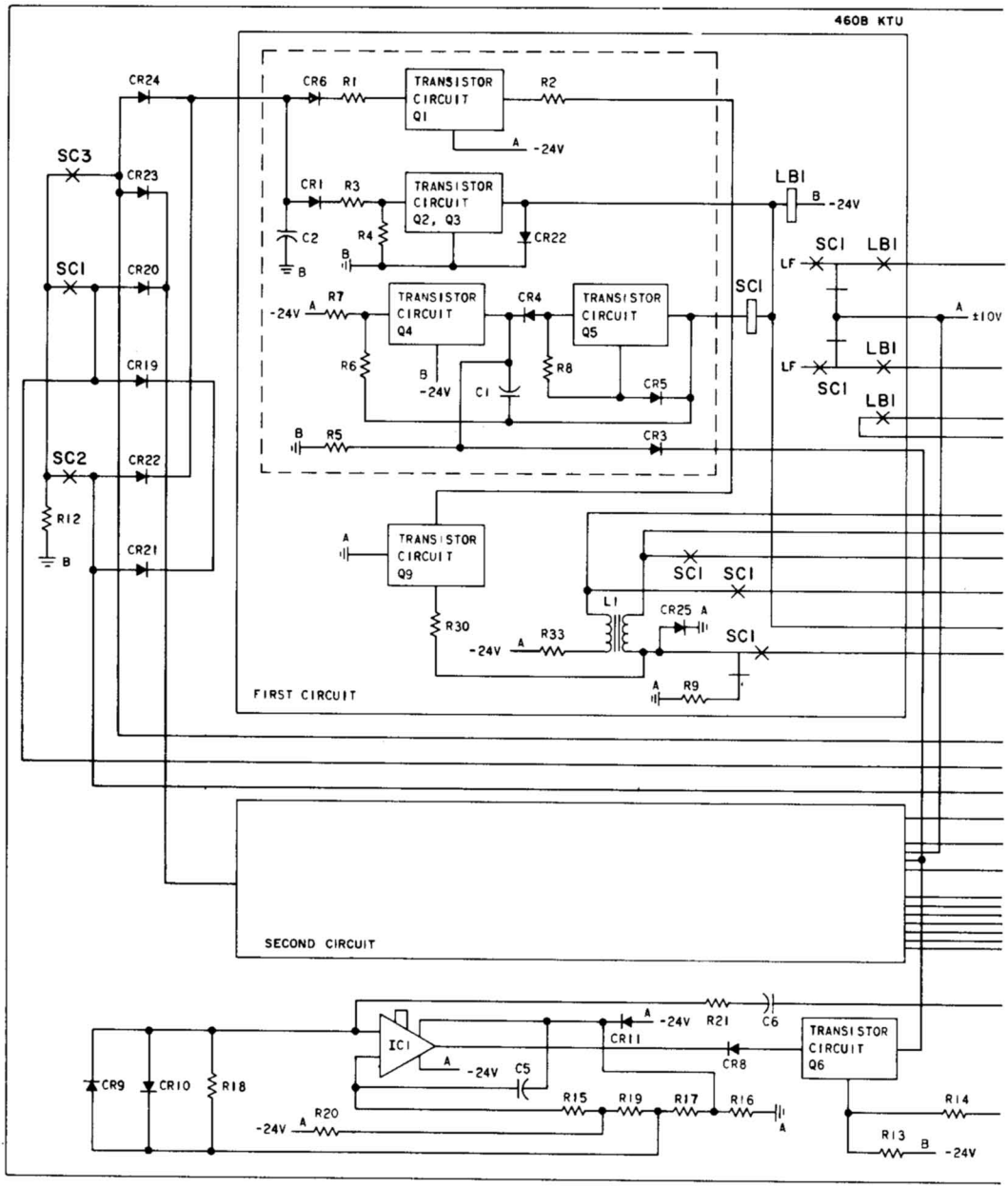

Fig. 18—Condensed Functional Schematic of 460-Type KTU (2-Path Intercom Access Circuit) (Sheet 1 of 2)

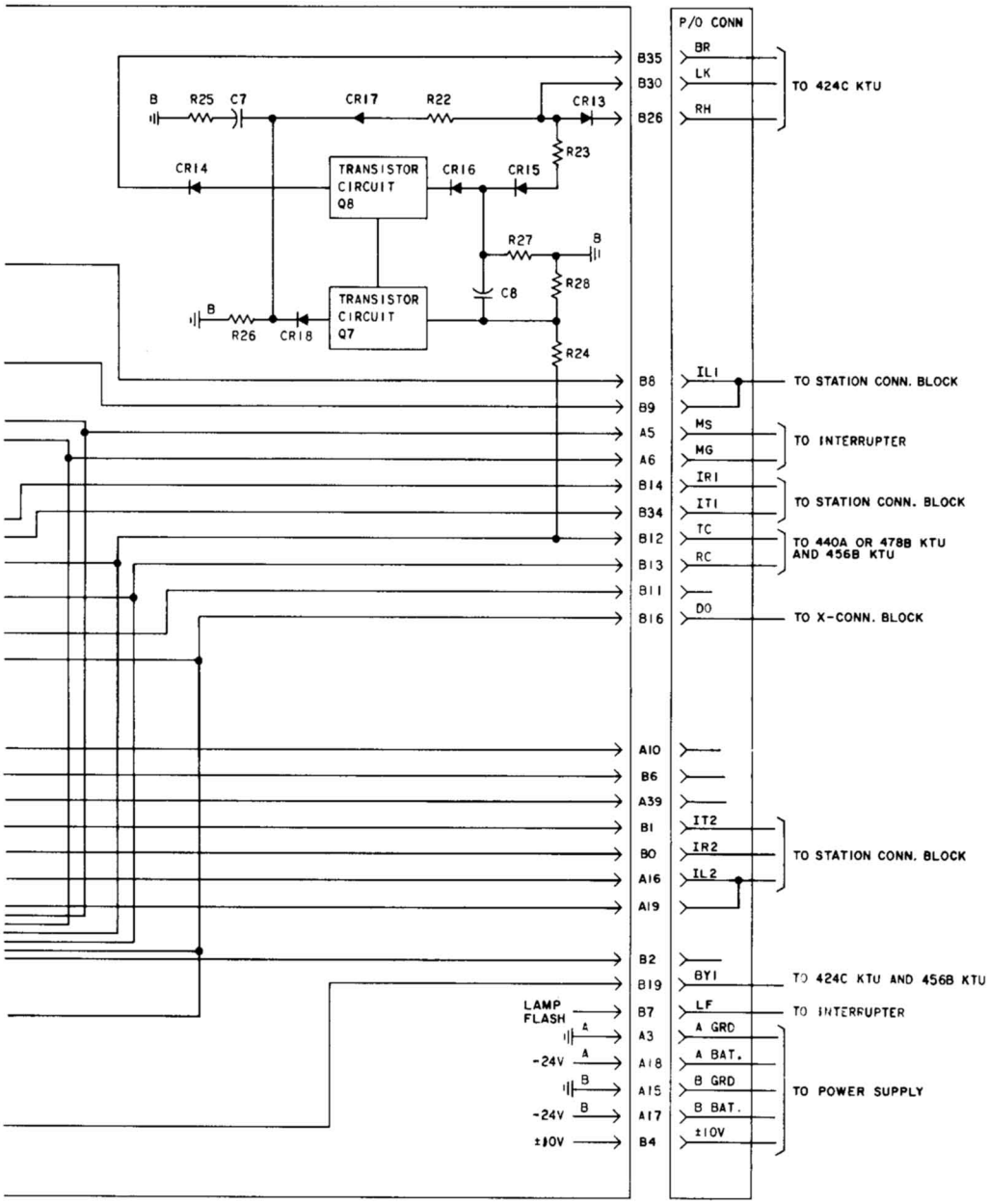

Fig. 18—Condensed Functional Schematic of 460-Type KTU (2-Path Intercom Access Circuit) (Sheet 2 of 2)

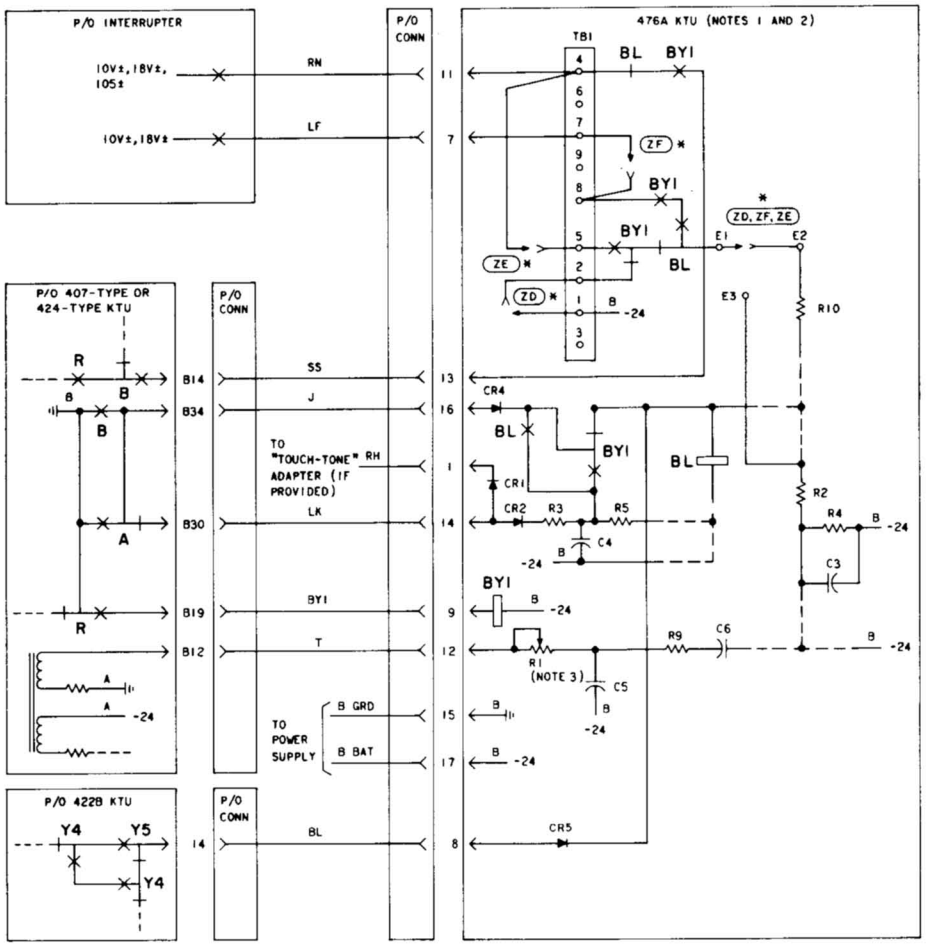

NOTES:

1. REQUIRES A MOUNTING FACILITY EQUIPPED WITH 20 OR 40 PINS.
2. THE 476A KTU CAN ONLY BE USED IN MODULAR PANEL INSTALLATIONS.
3. TURN KNURLED WHEEL TO FULL CLOCKWISE POSITION FOR MINIMUM DIAL TONE VOLUME AND TO FULL COUNTERCLOCKWISE POSITION FOR MAXIMUM DIAL TONE VOLUME.

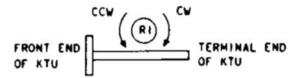

OPTIONS:

APPLICATION	"E" TERMINAL STRAPPING	OPTION	
AC OR NEGATIVE VOLTAGE CONTROL	E1 TO E2 *	DIAL TONE	ZD *
		STATION BUSY TONE	ZF *
		AUDIBLE RINGBACK	ZE *

* FACTORY PROVIDED STRAPPING

Fig. 19—Condensed Functional Schematic of 476A KTU (Dial Tone, Busy Tone, and Audible Ringback Tone)

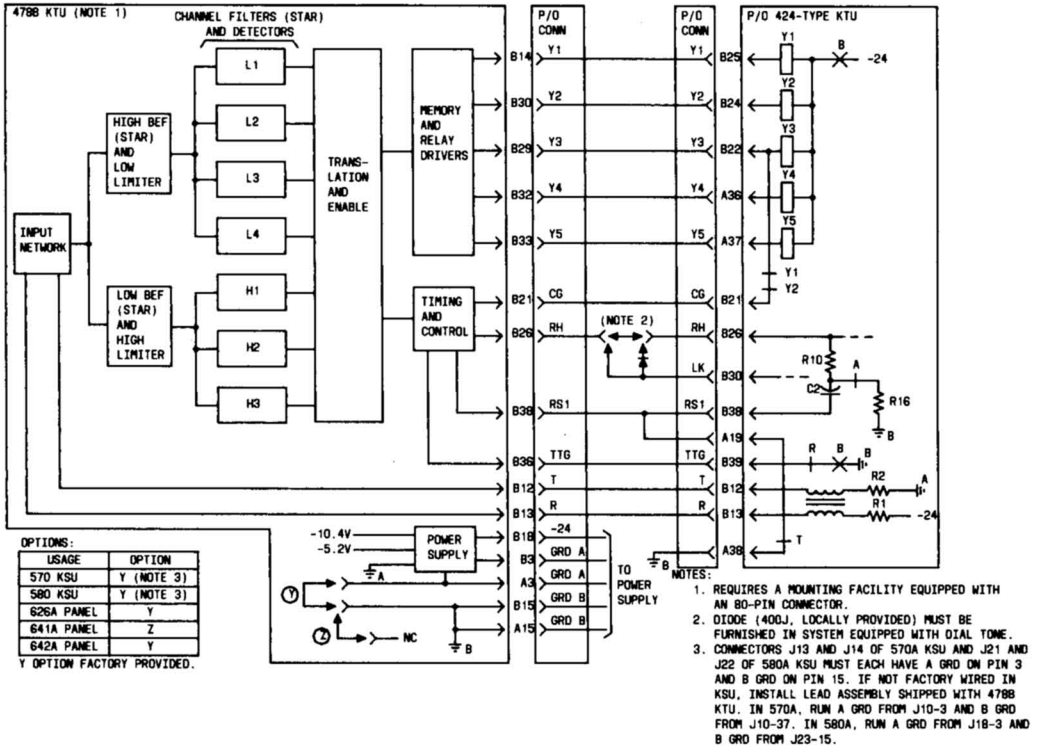

Fig. 20—Condensed Functional Schematic of 478B KTU (TOUCH-TONE Adapter Circuit)

2.24 ▶The 626A panel measures 8-1/2 inches wide, 18-1/2 inches high, and 6 inches deep. It is equipped with eight 914B connectors paired vertically to accept 4- or 8-inch KTUs. The 626A panel is designed for use with the 1A2 KTS. It serves as a means for providing a number of button-per-path type dial intercoms. The 626A panel can accommodate intercom configurations of 1, 2, or 3 paths with capacities of 19 or 37 stations. Intercom paths are selected by operation of the associated button on KTSs. Rotary and/or TOUCH-TONE dialing can be provided. Lead terminations are provided in a quick-connect field to facilitate connecting optional features and for connecting to station blocks of a 1A2 KTS cross-connect field.◀

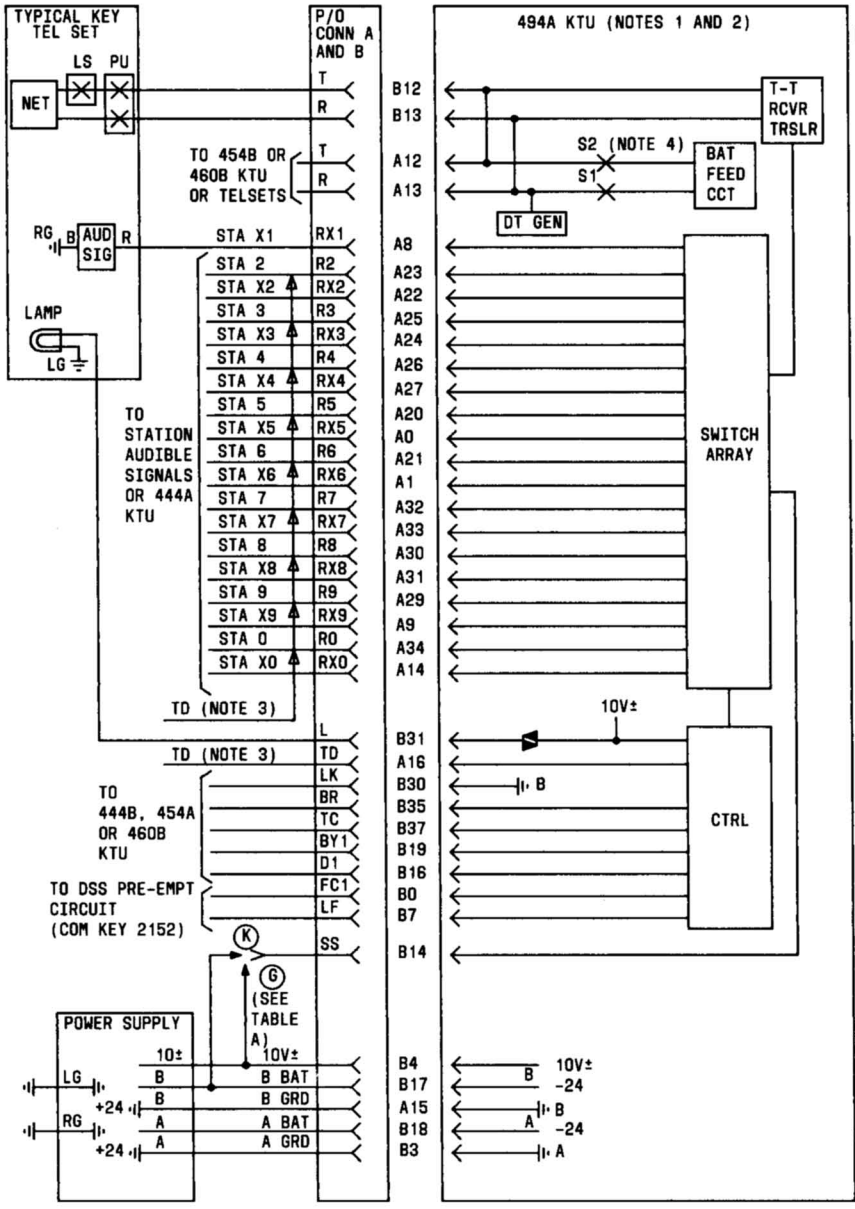

NOTES:

1. REQUIRES A MOUNTING FACILITY EQUIPPED WITH TWO 914A (40-PIN) CONNECTORS MOUNTED IN A VERTICAL PLANE.
2. SINGLE-SPURT SIGNAL IS NON-ADJUSTABLE AND PRESET AT NOMINAL 1.5 SECONDS DURATION.
3. DIGIT 1 ALWAYS FIRST DIGIT OF 2-DIGIT CODE; THEREFORE, NO STRAPPING FOR TD REQUIRED IN 19-CODE SYSTEM. DIGITS 2, 3, 4, AND/OR 5 MAY BE ASSIGNED AS INITIAL DIGIT OF 2-DIGIT CODE VIA TD STRAPPING. ONCE SELECTED, TD-CODE MAY NOT BE USED AS SINGLE DIGIT CODE.
4. SET SCREW SWITCHES S1 AND S2 AS FOLLOWS:
   - SINGLE-PATH INTERCOM -CLOSED (FULL CW)
   - COM KEY OR MULTIPATH INTERCOM -OPEN (CCW)

TABLE A

OPTION	AUD. SIG. REQUIREMENTS
G	10 VAC
K	-24 VDC

Fig. 21—Condensed Functional Schematic of 494A KTU (TOUCH-TONE Selector Circuit) (Sheet 1 of 2)

TABLE B
494A KTU USABILITY

MOUNTING APPARATUS OR PANEL				
COM	718 (7A)			*
	1434 (14A)			*
KEY	2152 (21A)	PANEL 702	A	NO
			B	YES
APPARATUS MOUNTING	69G			YES
	110A			YES
KEY SERVICE UNIT	513-,515-			YES
PANEL	601A			YES
	602A			NO
MODULAR PANEL	626A			YES
	641A			YES

* 478B KTU RECOMMENDED IN THESE SYSTEMS

Fig. 21—Condensed Functional Schematic of 494A KTU (TOUCH-TONE Selector Circuit) (Sheet 2 of 2)

SERVICE

1A2 KEY TELEPHONE SYSTEM

KEY TELEPHONE UNITS

CONTROL SERVICES

1. GENERAL

1.01 This section provides schematic information for the 400-series KTUs which provide control and switching circuits. These units provide for extending visual and audible signal arrangements.

1.02 This section is reissued to:

- Provide additional information on the 421A KTU
- Remove contact protection networks from Fig. 5, 412A KTU
- Provide a schematic diagram (Fig. 8) for a new circuit arrangement using the 421A KTU
- Change Fig. 9 to show the 421A KTU as a general purpose relay
- Remove all information on the 470A KTU which was never manufactured
- Correct errors in lead designations and terminal numbers in Fig. 10
- Change notes in Fig. 10 and 11.

1.03 The following KTUs and their functions are covered in this section:

- 402A—Diode Matrix
- 404A—Diode Matrix
- 412A—Auxiliary Relay Circuit
- 413A—Auxiliary Ringup Circuit
- 421A—Power Failure Transfer Circuit, Audible Signal Suppression Circuit, or General Purpose Relay
- 448A—Delayed Transfer Control Circuit
- 449A—Immediate Transfer Control Circuit
- 467A—Low-Voltage Monitor Circuit
- 469A—Lamp Extender Circuit.

1.04 Information on line services is covered in 518-215-400; auxiliary line service, 518-215-401; intercom services and associated features, 518-215-402. Section 518-215-100 contains general information on the 1A2 Key Telephone System.

Mechanical

1.05 All circuit components on these KTUs are mounted on a plug-in printed wiring board, one end of which is equipped with contacts. A 4-inch board may have 18-, 20-, or 40-contacts; an 8-inch board will have 80 contacts (requiring two vertical 40-pin connectors). The circuit boards plug into mating connectors in key service units (KSUs), panels, or apparatus mountings. Wiring from the connectors will be dedicated or nondedicated leads. Dedicated leads are those that normally appear on the same contacts of all KTUs, such as supply voltages and grounds, and are normally factory-wired. Nondedicated leads are those whose designation and function vary and are made available for installer connections. Fig. 1 and 2 show typical 4- and 8-inch KTUs.

NOTICE
Not for use or disclosure outside the
Bell System except under written agreement

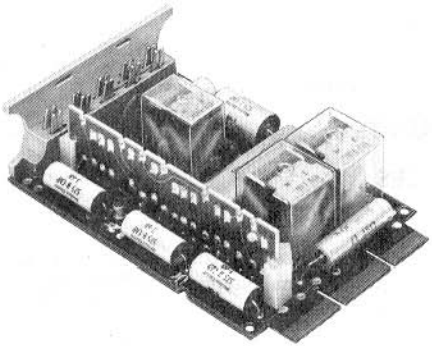

Fig. 1—Typical 4-Inch Key Telephone Unit

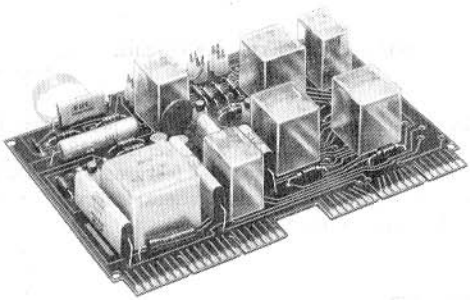

Fig. 2—Typical 8-Inch Key Telephone Unit

Electrical

1.06 Functional schematics (Fig. 3 through 13) cover the basic circuitry of each KTU, contacts used, and its relationship to telephone sets, other KTUs, power supplies, and apparatus. Dashed lines are used to simplify the schematic and to indicate intermediate circuitry. If full schematics are required, refer to the SDs listed in 1.09.

1.07 Voltages required for operation of the KTU, or provided to associated apparatus by the KTU, are shown with their connector pins. Other voltages may appear on the contacts of the mating connector, depending on the mounting arrangement, but not on the KTU.

1.08 KTUs may require the following power supply voltages and their associated grounds:

-24V (B battery) for control
-24V (A battery) for talk
±10V for visual and audible signals
±105V for audible signals

1.09 This issue of the section is based on the following drawings:

SD-69552-01, Issue 4—412A KTU

SD-69590-01, Issue 3—413A, 421A, 448A, and 449A KTUs

SD-69917-01, Issue 1—467A KTU

SD-69559-01, Issue 9B—469A KTU

If this section is to be used with equipment or apparatus reflecting later issues of the drawings, reference should be made to the CDs and SDs to determine the extent of the changes and the manner in which the section may be affected.

2. IDENTIFICATION

402A KTU (Diode Matrix)

2.01 The 402A KTU (Fig. 3) is used with the 1A1 KTS in existing spare space of the 501- and 502-type KSUs to control station common audible signals. The unit provides control for four lines and six audible signals, or vice versa, and uses 533F diodes which must be locally provided.

404A KTU (Diode Matrix)

2.02 The 404A KTU (Fig. 4) is a 4-inch, 18-contact unit capable of controlling 6 lines and 12 audible signals or vice versa. The unit is for use with a 259-type KTU, or equivalent adapter, and uses 533F diodes which must be locally provided.

412A KTU (Auxiliary Relay Circuit)

2.03 The 412A KTU (Fig. 5) is for use as a panel slave relay to augment signal interrupter lamp capacity for large installations. The KTU is arranged to plug into 584-type panels. It contains four dc operated mercury relays for lamp flash or lamp wink control. Each relay can control a maximum of one hundred 51A- or 53A-type lamps.

Each relay is also arranged so that it may be controlled individually. Coils are provided with protection networks.

413A KTU (Auxiliary Ringup Circuit)

2.04 The 413A KTU (Fig. 6) is a 4-inch, 18-contact unit providing an auxiliary nonlocking ring detector for use on CO or PBX lines supplying either 20- or 30-Hz ringing voltage. Contacts of the ringup relay can be used for controlling external signaling functions or relays. The KTU has the following operating features:

- Ringing voltage applied to RC lead by R relay operation
- Audible signaling control options
- Two spare pairs of relay contacts for local engineering (one make and one break)
- Ringing ranges are:

MINIMUM RMS RINGING VOLTAGE	NUMBER OF BRIDGED RINGERS*	
	STANDARD LOOPS 15K-OHM LEAKAGE	UNIGAUGE LOOPS 20K-OHM LEAKAGE
84 volts (20 Hz)	0-2	0†

*Refer to SD-69590 for specific information on worst possible cases.

†One bridged ringer will operate on approximately 2000 ohms.

421A KTU (Power Failure Transfer Circuit, Audible Signal Suppression Circuit, or General Purpose Relay)

2.05 The 421A KTU is a 4-inch, 40-contact unit that can be used to automatically transfer a maximum of three station ringers from a common audible connection to a line ringing connection in the event of a power failure (Fig. 7). ▶The 421A KTU can be used to suppress (cut off) audible signals on a line or lines associated with a key telephone set when that set is off-hook (Fig. 8).◀ It can also be used as a general purpose relay (Fig. 9). The KTU has the following operating features:

- Relay normally energized; for use during local power failure.
- Used with common audible matrix.
- Option strapping when used as a general purpose relay.
- Maximum external circuit loop resistance is 120 ohms.



▶It is recommended that the use of an audible signal suppression circuit on CO and PBX lines be restricted to installations having multiple ringers. Otherwise, incoming calls may be lost when a station is off-hook and the 421A KTU cuts off the audible signal.◀

448A KTU (Delayed Transfer Control Circuit)

2.06 The 448A KTU (Fig. 10) consists of two identical circuits mounted on a 4-inch printed wiring board. Each circuit is a variable delay timer which allows the ringer at the principal station to ring for a predetermined interval of time. The timer is factory-adjusted to time-out in 6-1/2 seconds, but it may be adjusted for a time-out interval of 1 to 30 seconds. When the timer times out, ringing is transferred to the attendant station. Lamp signals are provided at the principal station in the normal manner. Lamp flash starts at the attendant station when ringing is transferred.

449A KTU (Immediate Transfer Control Circuit)

2.07 The 449A KTU (Fig. 11) consists of two identical circuits mounted on a 4-inch printed wiring board. Each circuit consists of an electrical flip-flop which provides immediate transfer of ringing. The flip-flop is activated by a nonlocking key located at the principal station. When the key is operated, the flip-flop locks up to transfer incoming ringing from the principal station to the attendant station. A steady lamp indication is provided at the principal station when the nonlocking key is operated and the flip-flop is locked up. The transfer is canceled by operating the nonlocking control key a second time.

467A KTU (Low-Voltage Monitor Circuit)

2.08 The 467A KTU (Fig. 12) is a 4-inch, 18-pin unit that monitors the -24 volt supply for a low-voltage condition. If there is a low-voltage condition, a light emitting diode (LED) will light and will remain lighted until the reset button is depressed. The circuit is factory-adjusted to indicate a voltage below 19 volts but may be adjusted to indicate a voltage below 17 to 21 volts by a potentiometer provided by the circuit.

469A KTU (Lamp Extender Circuit)

2.09 The 469A KTU (Fig. 13) is a 4-inch, 18-pin unit that provides current to line lamp multiples when they exceed current capacity of the 400-type KTU. The 469A KTU can drive up to twenty lamps, has a current drain itself equivalent to one lamp, and will mount in connectors reserved for 400-type line circuits. The 469A KTU can be used in the 620A modular panel, 583-, 584-, 597-, and 598-type panels, 513, 514, and 515 KSUs, and 69-type apparatus mountings.

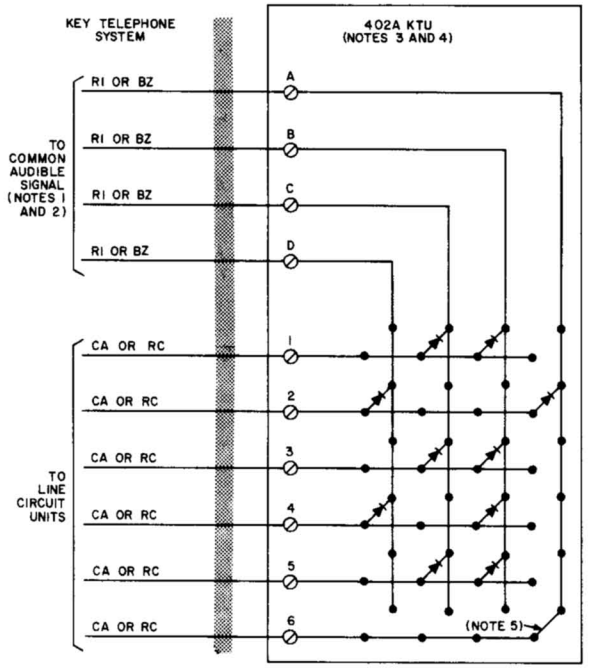

NOTES:
1. AUDIBLE SIGNALS MUST BE ALL RINGERS OR ALL AC BUZZERS. DO NOT USE RINGERS AND BUZZERS IN THE SAME CIRCUIT. DO NOT USE DC BUZZERS.
2. REMOVE CAPACITOR FROM RINGERS CONNECTED TO DIODE CIRCUIT.
3. FACTORY PROVIDED STRAPPING MUST BE REMOVED FROM SOME SYSTEMS BEFORE CONNECTING KTU.
4. ALL DIODES MUST BE POLARIZED IN SAME DIRECTION.
5. CONNECT 24-GAUGE BARE WIRE STRAP, INSTEAD OF DIODE, WHEN ONE COMMON RINGER WILL BE SIGNALED FROM A LINE CIRCUIT.

Fig. 3—Condensed Functional Schematic of 402A KTU (Diode Matrix)

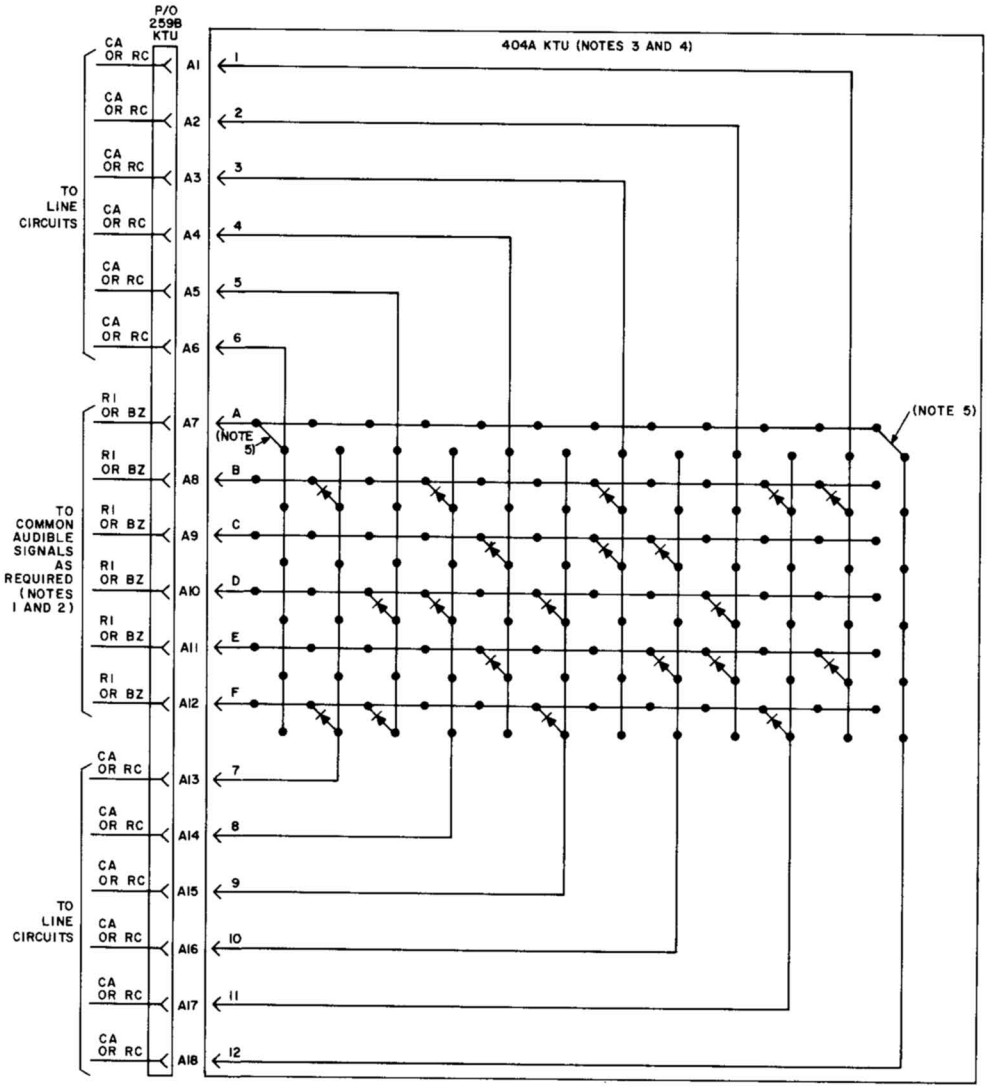

NOTES:

1. AUDIBLE SIGNALS MUST BE ALL RINGERS OR ALL AC BUZZERS. DO NOT USE RINGERS AND BUZZERS IN THE SAME DIODE CIRCUIT. DO NOT USE DC BUZZERS.
2. REMOVE CAPACITORS FROM THE RINGERS CONNECTED TO DIODE CIRCUIT.
3. FACTORY WIRING MUST BE REMOVED IN SOME SYSTEMS BEFORE CONNECTING THE 404A KTU.
4. ALL DIODES MUST BE POLARIZED IN THE SAME DIRECTION.
5. CONNECT A 24-GAUGE BARE WIRE STRAP, INSTEAD OF A DIODE, WHEN ONE COMMON RINGER WILL BE SIGNALED FROM A LINE CIRCUIT.

Fig. 4—Condensed Functional Schematic of 404A KTU (Diode Matrix)

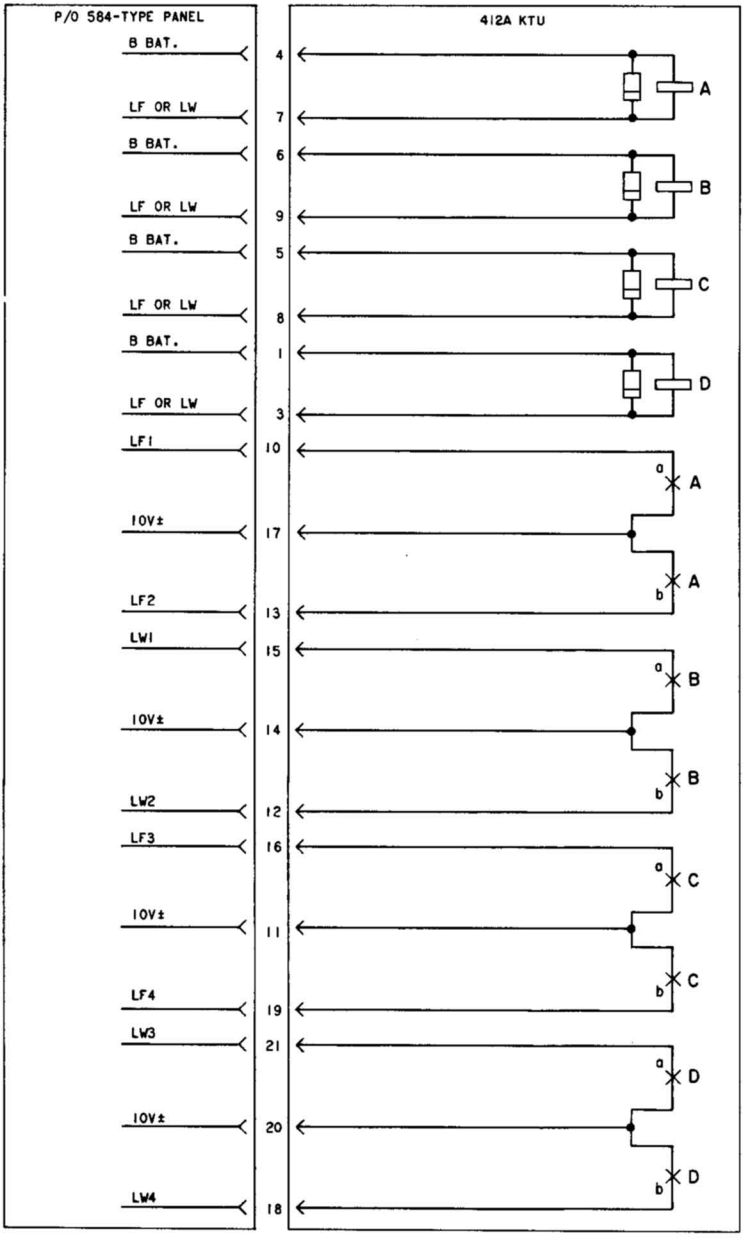

Fig. 5—Condensed Functional Schematic of 412A KTU (Auxiliary Relay Circuit)

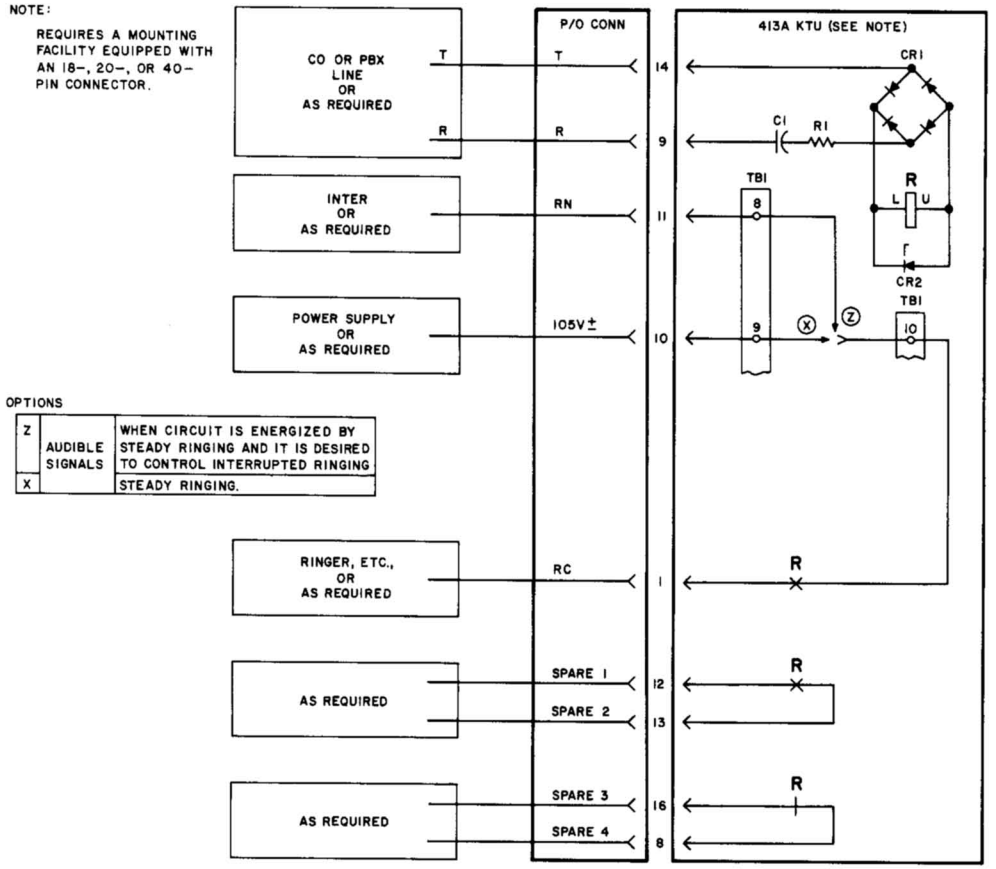

Fig. 6—Condensed Functional Schematic of 413A KTU (Auxiliary Ringup Circuit)

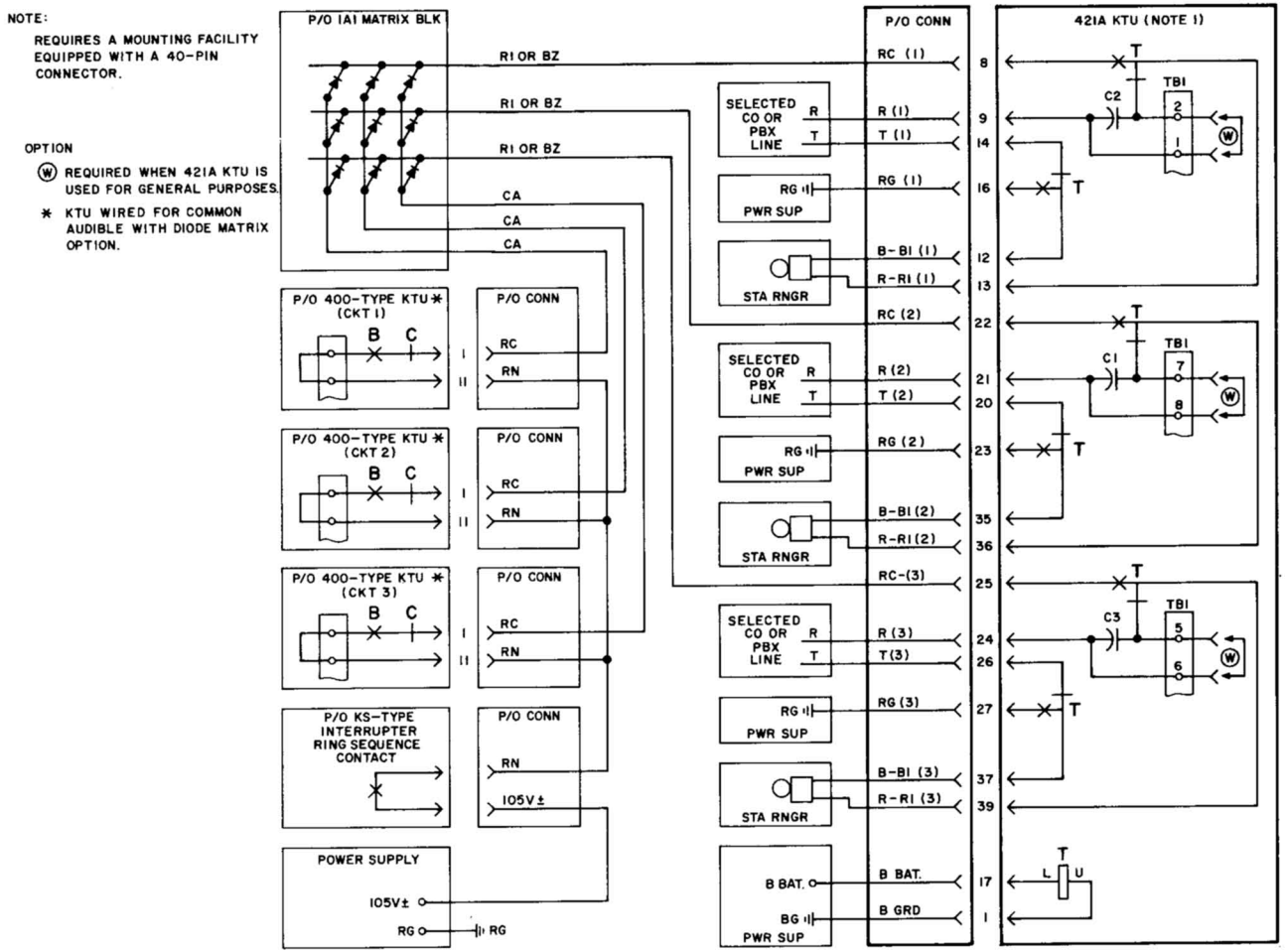

Fig. 7—Condensed Functional Schematic of 421A KTU (Wired for Power Failure Transfer)

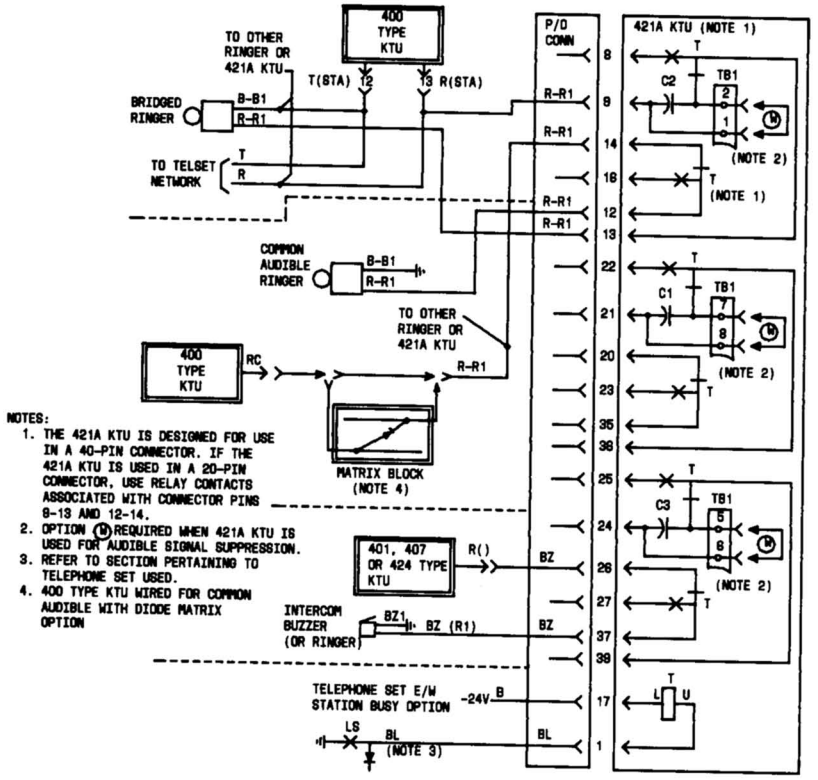

Fig. 8—Condensed Functional Schematic of 421A KTU (Wired for Audible Signal Suppression)

NOTE:
1. THE 421A KTU REQUIRES A MOUNTING FACILITY EQUIPPED WITH A 40-PIN CONNECTOR.
2. PROVIDE (W) OPTION AS REQUIRED.

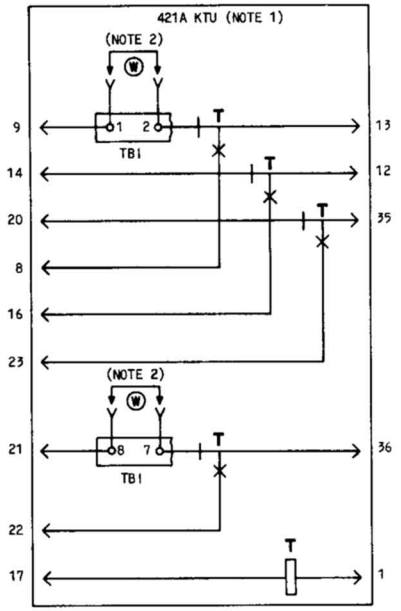

Fig. 9—Condensed Functional Schematic of 421A KTU (General Purpose Relay)

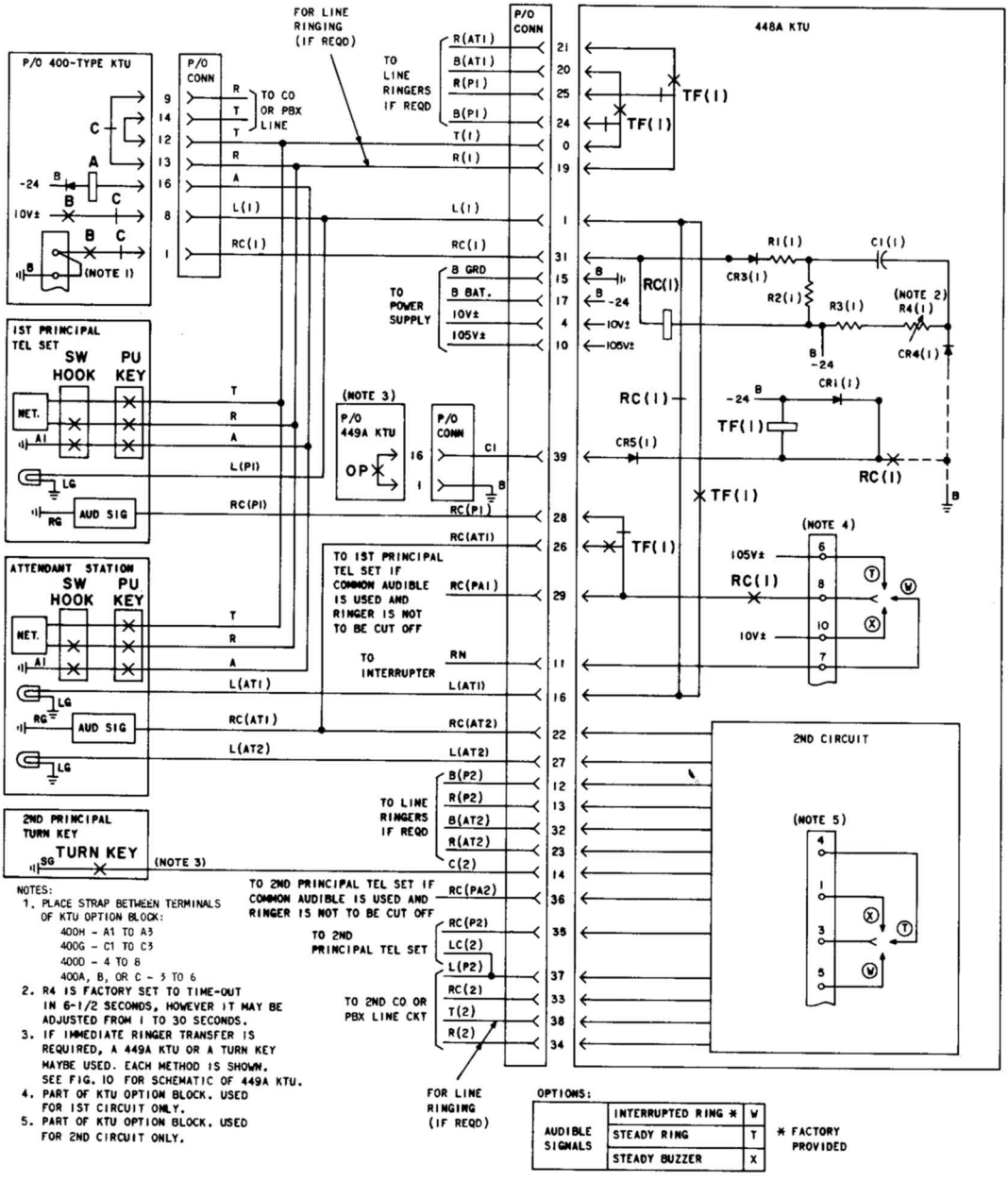

NOTES:
1. PLACE STRAP BETWEEN TERMINALS OF KTU OPTION BLOCK:
   400H - A1 TO A3
   400G - C1 TO C3
   400D - 4 TO 8
   400A, B, OR C - 3 TO 6
2. R4 IS FACTORY SET TO TIME-OUT IN 6-1/2 SECONDS, HOWEVER IT MAY BE ADJUSTED FROM 1 TO 30 SECONDS.
3. IF IMMEDIATE RINGER TRANSFER IS REQUIRED, A 449A KTU OR A TURN KEY MAYBE USED. EACH METHOD IS SHOWN. SEE FIG. 10 FOR SCHEMATIC OF 449A KTU.
4. PART OF KTU OPTION BLOCK. USED FOR 1ST CIRCUIT ONLY.
5. PART OF KTU OPTION BLOCK. USED FOR 2ND CIRCUIT ONLY.

Fig. 10—Condensed Functional Schematic of 448A KTU (Variable Delay Timer Circuit)

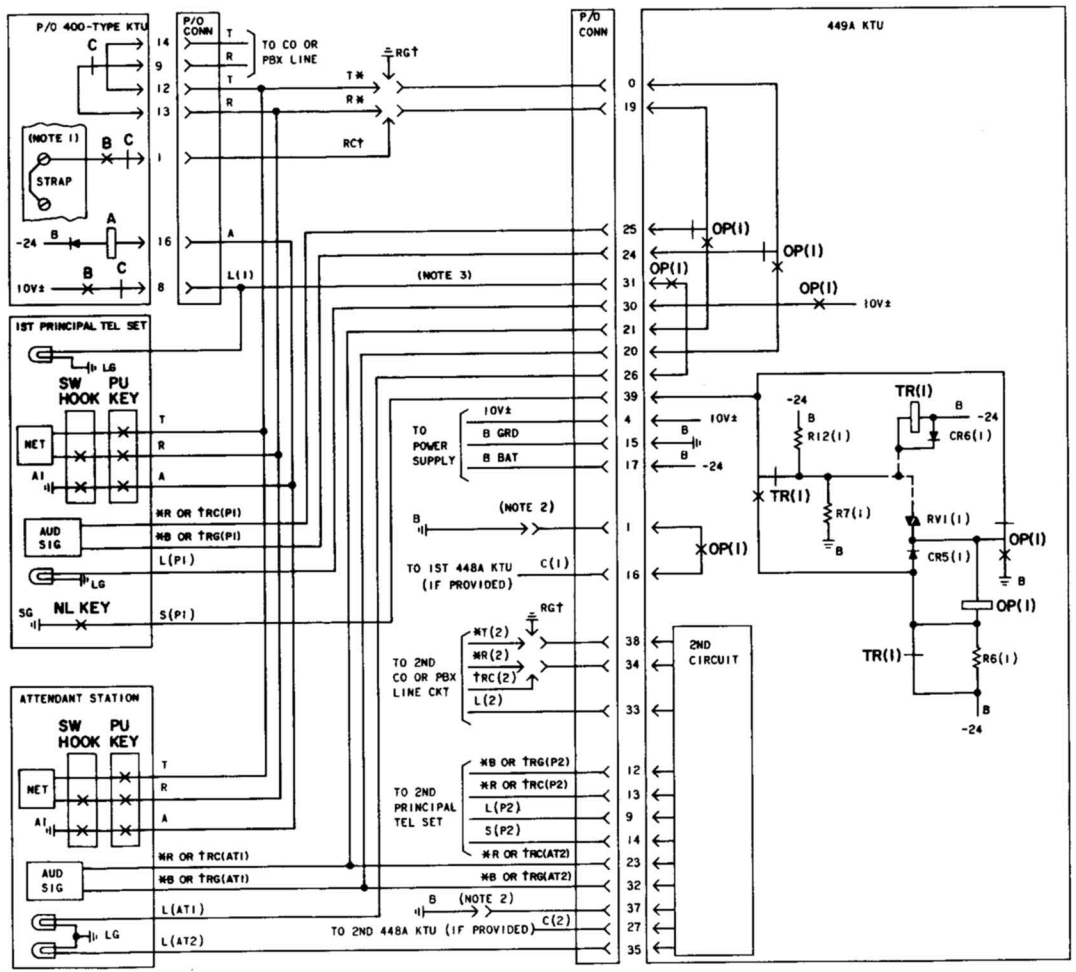

* FOR LINE RINGING
† FOR COMMON AUDIBLE RINGING

NOTES:
1. WHEN USING COMMON AUDIBLE RINGING, PLACE STRAP BETWEEN TERMINALS OF KTU OPTION BLOCK: 400H - A2 TO A3, 400G - C2 TO C3, 400D - 5 TO 8, 400A, B, OR C - 5 TO 6.
2. CONNECT B GRD ONLY IF 448A KTU IS PROVIDED. IF 448A KTU IS PROVIDED, NONE OF THE RINGER CONNECTIONS SHOWN ARE REQUIRED.
3. THE ATTENDANT LAMP WILL BE CONTROLLED BY THE 448A KTU.

Fig. 11—Condensed Functional Schematic of 449A KTU (Immediate Transfer Control Circuit)

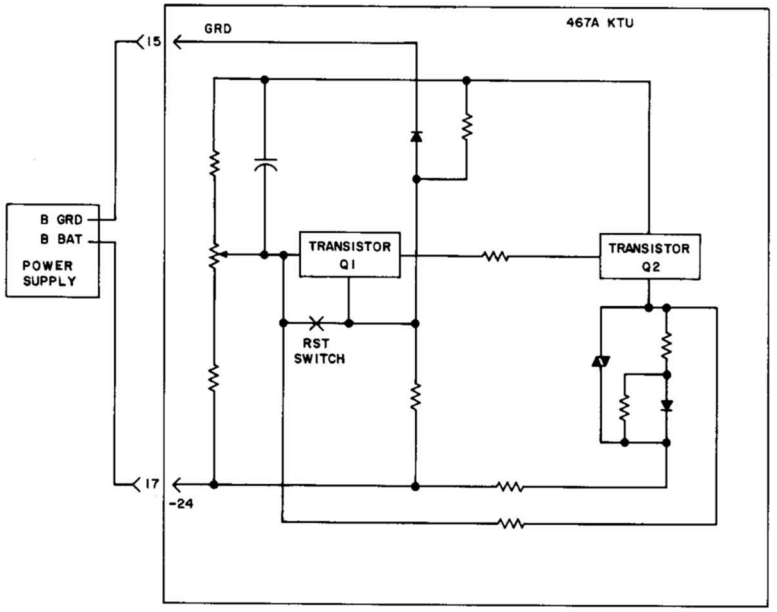

Fig. 12—Condensed Functional Schematic of 467A KTU (Low-Voltage Monitor Circuit)

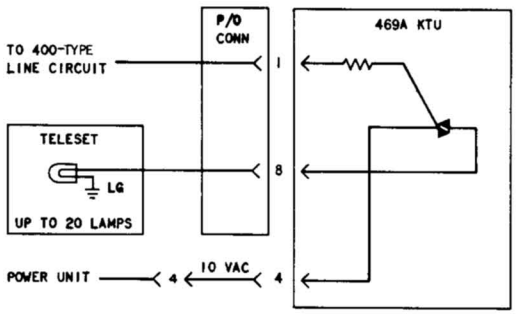

Fig. 13—Condensed Functional Schematic of 469A KTU (Lamp Extender Circuit)

SERVICE

1A2 KEY TELEPHONE SYSTEM

501- AND 502-TYPE KEY SERVICE UNITS

1. GENERAL

1.001 This addendum supplements Section 518-215-404, Issue 1. Place this pink sheet ahead of Page 1 of the section.

1.002 This addendum is issued to:

- Add information on the treatment of central office (CO) lines under the Federal Communications Commission's (FCC) Registration Program
- Show the 501- and 502-series KSUs MD.

2. CHANGES TO SECTION

2.001 On Page 1, add the following after paragraph 1.03:

1.04 Incoming CO lines to be installed in compliance with the FCC Registration Program must be routed through a standard network interface. Information on approved interfaces is contained in Section 461-604-105, entitled Connecting Blocks, 66M3-50R—Identification, Installation, and Maintenance.

2.002 On Page 3, in Table A, show the 501A4, 501A4D, 502A3D, and 502A4D KSUs rated MD.

NOTICE
Not for use or disclosure outside the
Bell System except under written agreement

Printed in U.S.A.

SERVICE

1A2 KEY TELEPHONE SYSTEM

501- AND 502-TYPE KEY SERVICE UNITS

1. GENERAL

1.01 This section provides identification, installation, connections and maintenance information for 501- and 502-type key service units (KSU). See Fig. 1.

1.02 Information in this section was formerly contained in Sections 518-250-101 and 518-250-401, which are hereby canceled.

1.03 This issue of the section is based on SD-69476-01, Issue 5D. If the section is to be used with equipment or apparatus reflecting later issues of the drawing, reference should be made to the SD to determine the extent of the change and the manner in which the section may be affected.

2. IDENTIFICATION

PURPOSE

Provides mounting facilities for 400 series KTUs with a capacity of six CO or PBX lines and optional manual or dial intercom.

ORDERING GUIDE

- Unit, Service, Key—See Table A



The 400 series KTUs are not furnished as part of the KSUs and must be ordered separately as required.

(a) ***Associated Apparatus (order separately)***

- Unit, Telephone, Key, 400A (MD), 400B (MD), 400C (MD), 400D
- Unit, Telephone, Key, 401A (for manual intercom)

DESIGN FEATURES

(a) The prewired package capacity, at the connecting blocks, is one to six central office (CO) or PBX lines, plus 9-station dial intercom (optional).

(b) When manual intercom service is to be furnished, the total line capacity is reduced by one for each 401A KTU installed.

(c) Spare mounting space on the lower half of the 31B apparatus mounting can be used for installing additional miscellaneous angle-bracket or panel-type KTUs.

(d) Preprinted aluminum foil pressure-sensitive tapes are provided on each 66-type connecting block to designate service feature leads and wiring connections.

(e) The two 502 series KSUs include a 6-foot length of A75A connector cable, partially factory terminated on the 66-type connecting blocks. Telephone sets may be plugged into these packages directly or extended by use of connector cables and/or adapters.

(f) A 24-volt dc operated KS-19385, List 1 (MD) or List 2 interrupter can be substituted for the one furnished with the KSU at locations where only 24-volt dc power is used.

3. INSTALLATION

PLANNING

3.01 Select a wall location in accordance with the following:

- Customer's approval and best interest
- Accessible with adequate illumination for maintenance

© American Telephone and Telegraph Company, 1974
Printed in U.S.A.

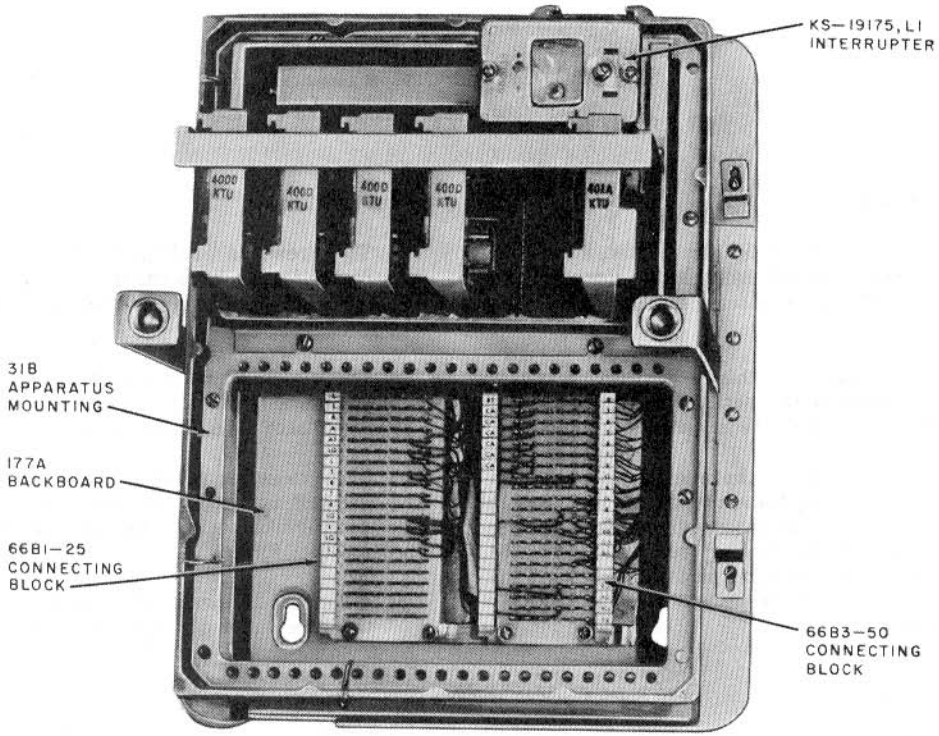

Fig. 1—501-Type KSU Front View with Cover Removed

- Wall offering adequate support and stability
- As close as practicable to stations being served
- Close to conduit or duct system for cabling purposes
- Near commercial ac power receptacle(s)
- Clean, dry, well ventilated, and free from flammable or corrosive fumes
- Where the surrounding room temperature normally does not exceed 110°F. Avoid locations near radiators, steam pipes, registers, and similar heating devices which would subject the equipment to excessive heat.

3.02 Refer to the following sections for additional information required to plan the installation of the KSU.

- 463-140-100, Equipment Cabinets and Apparatus Mountings, Identification
- 518-010-105, KTS, Grounding and Special Protection Requirements

INSTALLING

3.03 Use care when unpacking KSU to prevent damage.

3.04 Install KSU as follows:

(1) Remove cover from KSU.

TABLE A

501- AND 502-TYPE KSUS

UNIT, SERVICE, KEY	9-STA DIAL INTERCOM 207C KTU*	POWER PLANT J86731D3 LIST 1*	116A COVER	ED-69462-50 FLOOR STAND (WITH COVER)	1-66B1-25 1-66B3-50 CONN BLOCKS	A75A CONN CABLE	31B APP MTG	177A BACK-BOARD	KS-19175, L1 INTERRUPTER* NOTE 1
501A1†					•		•	•	•
501A1D†	•				•		•	•	•
501A2†			•		•		•	•	•
501A2D†	•		•		•		•	•	•
501A3†				•	•		•	•	•
501A3D†	•			•	•		•	•	•
501A4		•		•	•		•	•	•
501A4D	•	•		•	•		•	•	•
502A3D	•			•	•	•	•	•	•
502A4D	•	•		•	•	•	•	•	•

* Replaceable components.

† MD

Note 1: KS-19385, List 1 (MD) or List 2 are optional for 24-volt dc operation.

(2) Locate the fastener holes at the selected location.

(3) Install appropriate fasteners.

(4) Hang KSU on fasteners.

(5) Connect the circuit ground to an approved ground. For circuit ground, a No. 14 gauge wire should be attached from the LOC GRD terminal of the power unit to an approved local ground. If a 3-wire grounded receptacle is not available, a ***frame ground*** (No. 14 gauge wire) must be connected from the case or frame of the power unit to an approved local ground. ***Do not strap the circuit ground to the frame or case of the power unit. The susceptibility of surge damage to semiconductor components used in 400-series KTUs require that grounding procedures be followed. Properly grounded installations will minimize service failures that can result from surge voltages or differences between dissimilar grounds.***

(6) Unlatch and open carrier.

(7) Terminate incoming CO/PBX lines. See Table B.

(8) Terminate station cables. See Table C.

(9) Place option straps (if required).

(10) Close and latch carrier assembly.

(11) Install KTUs necessary to provide required services.

3.05 Connect to an external power source if power plant is not supplied as part of the package. See Table B.

Note: The 101G-type power unit can furnish dc power to only one 501- or 502-type KSU.



400-type KTUs require 20 volts minimum dc power for reliable relay operation. If power source is unmodified 101G-type power unit, do not feed other equipment from it, if this minimum voltage limit cannot be met. No more than 20 line lamps should be supplied

TABLE B

WIRING FEATURES AND LEAD DESIGNATIONS AT CONNECTING BLOCKS C AND D

6683-50 CONNECTING BLOCK														
BLOCK "C"							BLOCK "D"							
FEATURE		LEAD DESIG	TERM. ROW	A	B	C	D	E	F	TERM. ROW	LEAD DESIG	FEATURE		
Dial Selective Intercom Line Signaling Leads		B 2 R	1 2							1 2	A-GRD. A-BAT.	Line 1	Manual Intercom Battery Feed	
		R 3 B	3 4							3 4	A-GRD. A-BAT.	Line 2		
		R 4 B	5 6							5 6	A-GRD. A-BAT.	Line 3		
		B 5 R	7 8							7 8	A-GRD. A-BAT.	Line 4		
		B 6 R	9 10							9 10	A-GRD. A-BAT.	Line 5		
		B 7 R	11 12							11 12	A-GRD. A-BAT.	Line 6		
		B 8 R	13 14							13 14	±18 VOLTS ±GRD	Ext. Power Supply Conn.		
		B 9 R	15 16							15 16	CO	Common Control Leads To Other Connecting Equipment		
		B 0 R	17 18							17 18	BZ BZ1			
Audible Signal	Line 1	B1, BZ1 R1, BZ	19 20							19 20	RN ST			
	Line 2	B1, BZ1 R1, BZ	21 22							21 22	LF1 LW1			
	Line 3	B1, BZ1 R1, BZ	23 24							23 24	LF2 LW2			
	Line 4	B1, BZ1 R1, BZ	25 26							25 26	T R	Line 1	CO or PBX Lines	
	Line 5	B1, BZ1 R1, BZ	27 28							27 28	T R	Line 2		
	Line 6	B1, BZ1 R1, BZ	29 30							29 30	T R	Line 3		
*Common Audible Control		CA CA	31 32							31 32	T R	Line 4		
		CA CA	33 34							33 34	T R	Line 5		
V,S		CA CA	35 36							35 36	T R	Line 6		
Spare			37 38							37 38	G (LG1) B (LB1)	External Power Supply Connections		
			39 40							39 40	G (LG2) B (LB2)			
			41 42							41 42	GB (GRD-B) BB (BAT-B)			
			43 44							43 44	GA (GRD-A) BA (BAT-A)			
			45 46							45 46	GB (GRD-B)			
			47 48							47 48	G or RG BAT ± or 105V ±			
			49 50							49 50	G or RG BAT ± or 105V ±			

*To common audible auxiliary equipment, Fig. 3 as required.

TABLE C

WIRING FEATURES AND LEAD DESIGNATIONS AT CONNECTING BLOCK A

66B1-25 CONNECTING BLOCK "A" ARRANGEMENT OF FEATURES AND DESIGNATIONS SHOP-WIRED									
FEATURE	LEAD DESIG	TERM. ROW	A	B	C	D	E	F
Line 1	T	1						
	R	2						
	A	3						
	A1	4						
	LG	5						
	L	6						
Line 2	T	7						
	R	8						
	A	9						
	A1	10						
	LG	11						
	L	12						
Line 3	T	13						
	R	14						
	A	15						
	A1	16						
	LG	17						
	L	18						
Line 4	T	19						
	R	20						
	A	21						
	A1	22						
	LG	23	*	*	*	*	*	
	L	24						
Line 5	T	25						
	R	26						
	A	27						
	A1	28						
	LG	29						
	L	30						
Line 6	T	31						
	R	32						
	A	33						
	A1	34						
	LG	35						
	L	36						
Dial Selective Intercom Line †	T	37						
	R	38						
	T	39						
	R	40						
	LG	41						
	L	42						
	LG	43						
	L	44						
Spare Clips		45						
		46						
		47						
		48						
		49						
		50						

Connect key cables as required

Shop-Wired to Apparatus

* Terminate key cables from left to right on available clips as required.
† Dial intercom line furnished in "D" suffixed KSU only.

through one 400-type KTU; no more than 50 lamps total should be supplied from one interrupter contact.

4. CONNECTIONS

4.01 See Fig. 2 for layout of connecting block terminals.

External Power Supply

4.02 If an external power supply is required, connect the power supply to connecting block D according to Table B.

Interrupter Options

4.03 A 24-volt dc interrupter may be used in place of the factory-provided 10V ac interrupter. See Table D for connections.

Common Audible Signaling

4.04 See Fig. 3 for common audible signaling connections.

Manual Intercom Circuit (401A KTU)

4.05 Connections for the manual intercom circuit (401A KTU) are shown in Fig. 4.

Dial Intercom Circuit (207C KTU)

4.06 Addition of a 207C KTU can be accomplished by using previously placed factory wiring and connecting as shown in Fig. 5.

501-Type KSU

4.07 Terminate incoming CO/PBX lines on connecting block D as shown in Table B. Terminate key cables on connecting blocks A and C as shown in Tables B and C. Key cables should be terminated in sequence as shown in Fig. 6.

502-Type KSU

4.08 Terminate incoming CO/PBX lines on connecting block D as shown in Table B.

4.09 A factory supplied length of A75A connector cable is connected to block A. (See Fig. 6

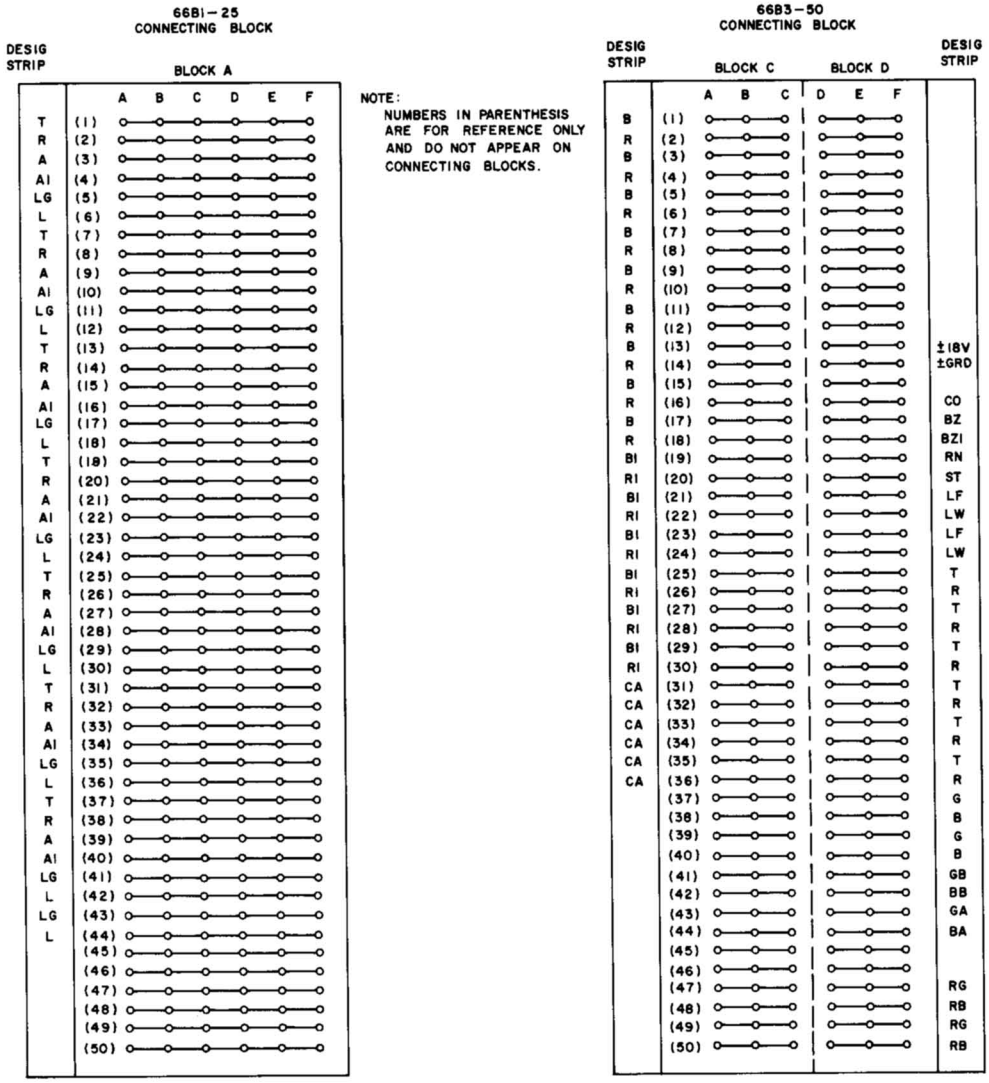

Fig. 2—Terminal Layout of Connecting Blocks A, C, and D

and Table E.) Each 50-contact KS-16690, List 1 connector will provide for:

- 6-line pickup and hold features
- Dial intercommunicating line
- Visual signals for six lines and one intercom circuit
- Common audible signal circuits
- Audible signaling for intercom lines.

TABLE D

CONNECTIONS FOR 24V DC INTERRUPTER

	MOVE FACTORY STRAP*		ADD STRAP*		REMOVE
	FROM	TO	FROM	TO	
KS-19385,L1 (MD) Interrupter	42D	46D	42D	46E	Strap Between Terminals 10 and 13 on Interrupter Connector
	37E	46F	45D	†	
KS-19385,L2 Interrupter	42D	46D	42D	46E	
	37E	45D	46F	†	

*Terminals on connecting block D.
†Connect to terminal 10 on interrupter connector.

4.10 When more than four line circuits are to be served through the A75A connector cable, rearrange the wiring as required on the connecting blocks. (Refer to Table C and E.)

4.11 Some pairs in each binder group of the A75A connector cable are not factory terminated. These pairs may be used for dial intercommunicating codes, audible signal leads, and common audible control leads by connecting them to the proper terminals on connecting block C.

4.12 Connect additional key cables as needed to available terminals not occupied by connector cable leads (Fig. 6).

5. MAINTENANCE

5.01 Maintenance of the KSU is limited to normal station repairs and wiring checks of the mounting facility and terminal field. No field maintenance is to be performed on the plug-in KTUs.

5.02 Care must be used when removing and inserting plug-in KTUs into the connectors to avoid damage to the printed wiring and other components.

5.03 When trouble is encountered, proceed as follows:

(a) Determine if trouble is at individual station or common to the system.

(b) If common to the system:

(1) Check power supply and fuses.

(2) From nature of trouble report, determine which KTU is causing trouble.

(3) Replace KTU with one known to be working properly to determine whether trouble is in KTU or external to it (be sure to strap in the correct options on replacement KTU, as applicable).

(c) If replacement of the KTU does not clear trouble, the trouble is external to the KTU and the complete wiring serving the KTU should be checked. Place original KTU back in service.

5.04 When a KTU or a connector is taken out of service or replaced by another, all nondedicated wiring for the connector or KTU should be removed to avoid damage to a different type KTU should it be inadvertently plugged into the connector.

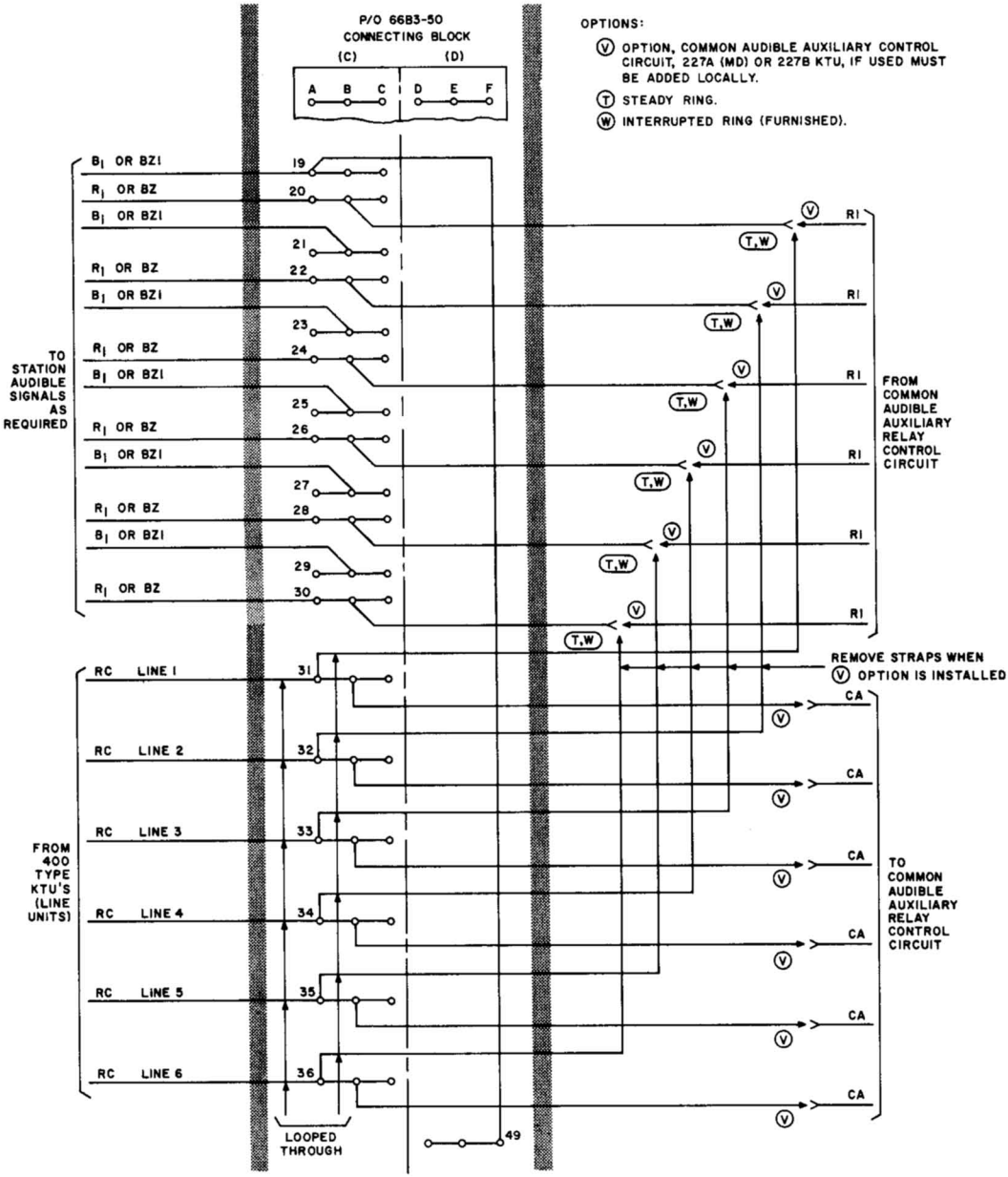

Fig. 3—Common Audible Connections for Auxiliary Relay Control Circuit

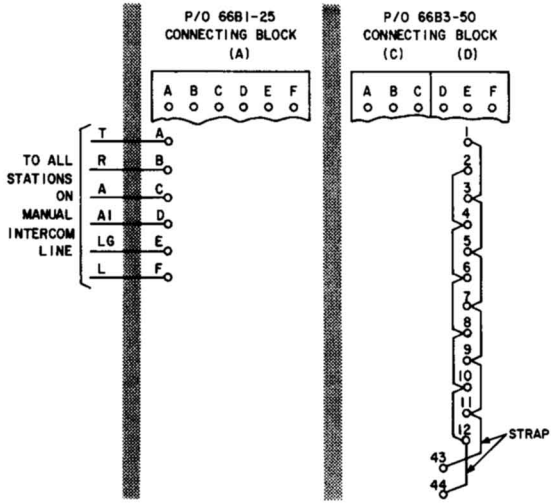

REF DESIG	J1			J2			J3			J4			J5			J6		
	CONNECTING BLOCK																	
	A	C	D	A	C	D	A	C	D	A	C	D	A	C	D	A	C	D
A	1			7			13			19			25			31		
B	2			8			14			20			26			32		
C	3			9			15			21			27			33		
D	4			10			16			22			28			34		
E	5			11			17			23			29			35		
F	6			12			18			24			30			36		

Fig. 4—Connections for Manual Intercom Circuit, 401A KTU

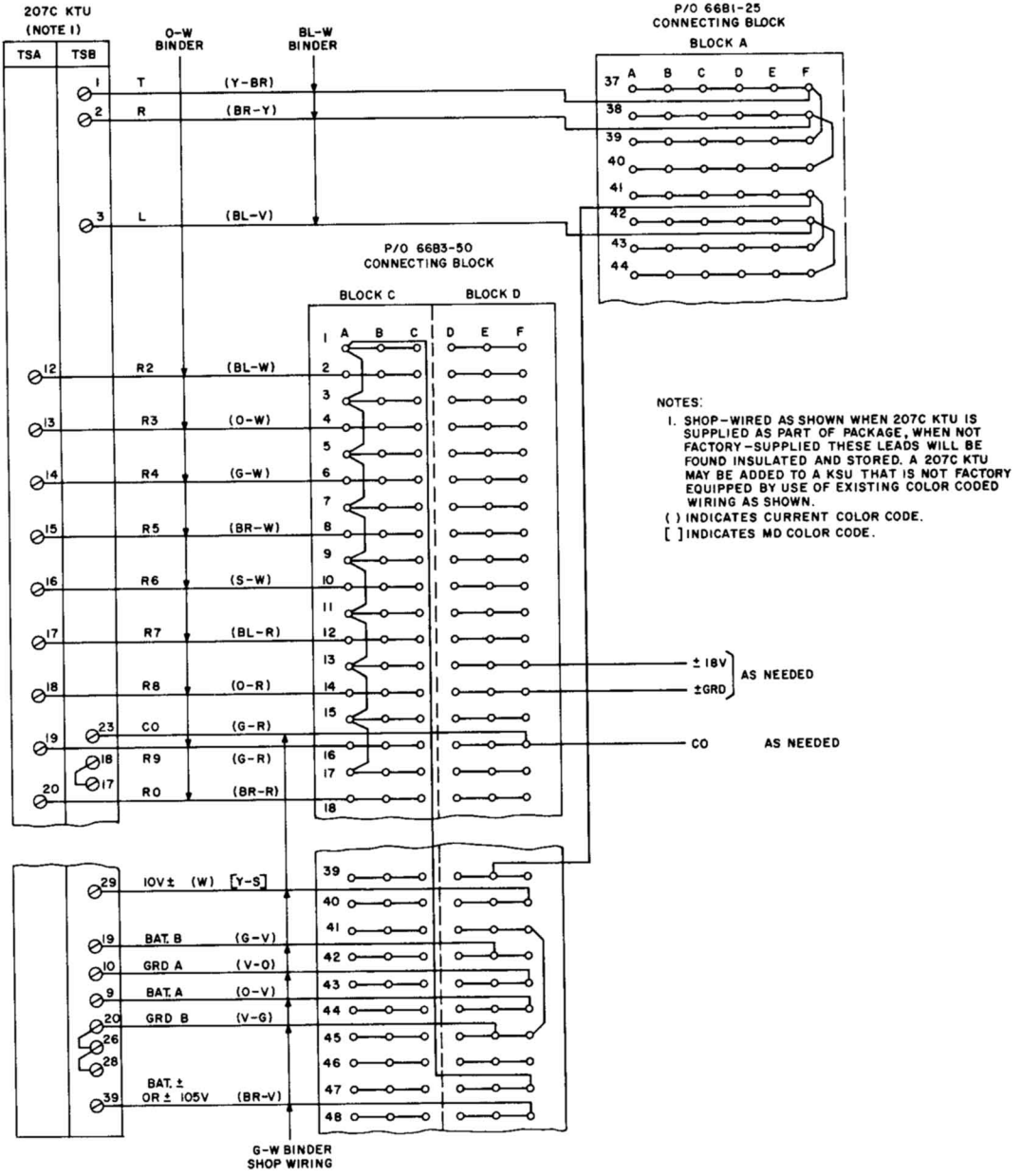

Fig. 5—Connections for Dial Intercom Circuit, 207C KTU

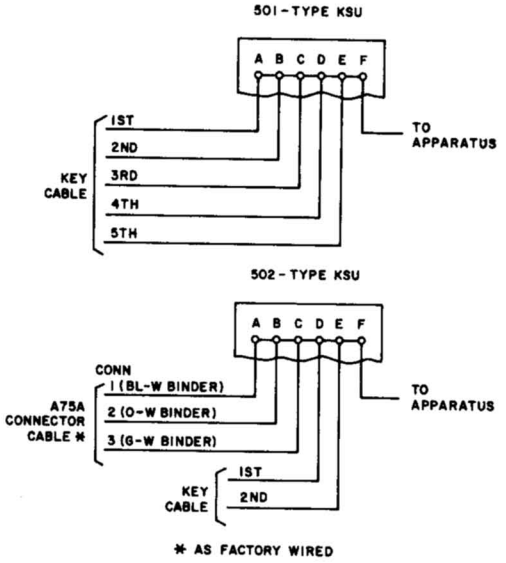

Fig. 6—Key Cable Termination on Connecting Block A

TABLE E

FACTORY CONNECTIONS OF A75A CONNECTOR CABLE ON 66B1-25 CONNECTING BLOCK A IN THE 502A3D AND 502A4D KSUS

A75A CONNECTOR CABLE					66B1-25 CONNECTING BLOCK BLOCK "A"					
FEATURE	LEAD DESIG	PIN NO.	CABLE COLOR	TERM. ROW	A	B	C	D	E	F
Line 1	T	26	W-BL	1	CONNECTOR 1 BLUE-WHITE BINDER SHOP-WIRED	CONNECTOR 2 ORANGE-WHITE BINDER SHOP-WIRED	CONNECTOR 3 GREEN-WHITE BINDER SHOP-WIRED			
	R	1	BL-W	2						
	A	27	W-O	3						
	A1	2	O-W	4						
	LG	28	W-G	5						
	L	3	G-W	6						
Line 2	T	29	W-BR	7						
	R	4	BR-W	8						
	A	30	W-S	9						
	A1	5	S-W	10						
	LG	31	R-BL	11						
	L	6	BL-R	12						
Line 3	T	32	R-O	13						
	R	7	O-R	14						
	A	33	R-G	15						
	A1	8	G-R	16						
	LG	34	R-BR	17						
	L	9	BR-R	18						
Line 4	T	35	R-S	19						
	R	10	S-R	20						
	A	36	BK-BL	21						
	A1	11	BL-BK	22						
	LG	37	BK-O	23						
	L	12	O-BK	24						
These cable pairs in each binder of the A75A cable are not terminated by the factory. Connect pairs as needed per Table D.		38	BK-G	25						
		13	G-BK	26						
		39	BK-BR	27						
		14	BR-BK	28						
		40	BK-S	29						
		15	S-BK	30						
		41	Y-BL	31						
		16	BL-Y	32						
		42	Y-O	33						
		17	O-Y	34						
		43	Y-G	35						
		18	G-Y	36						
		44	Y-BR	37						
		19	BR-Y	38						
		45	Y-S	39						
		20	S-Y	40						
		46	V-BL	41						
		21	BL-V	42						
		47	V-O	43						
		22	O-V	44						
		48	V-G	45						
		23	G-V	46						
		49	V-BR	47						
		24	BR-V	48						
		50	V-S	49						
		25	S-V	50						

SERVICE

513-, 514-, AND 515-TYPE KEY SERVICE UNITS

IDENTIFICATION, CONNECTION, AND MAINTENANCE

1A2 KEY TELEPHONE SYSTEM

1. GENERAL

1.001 This addendum supplements Section 518-215-405, Issue 7. Place this pink sheet ahead of Page 1 of the section.

1.002 This addendum is issued to add information related to the Federal Communications Commission's (FCC) Registration Program.

2. CHANGES TO SECTION

2.001 On Page 6, following paragraph 1.02, add the following:

1.03 The 513-, 514-, and 515-type key service units (KSUs) have not been registered with the FCC and new units will not be manufactured after January 1, 1980. Also after January 1, 1980, connection of customer-provided equipment (CPE) or telephone company-provided equipment requires the use of a 33B voice coupler when providing music-on-hold and a 401B, 415B, 471C, and 479C key telephone units (KTUs) when providing their related services. Previously connected or Class C units may be used for additions and maintenance at grandfathered installations for the life of the equipment, provided they are not modified. Class C stock may also be used in new installations after January 1, 1980.

NOTICE
Not for use or disclosure outside the
Bell System except under written agreement

Printed in U.S.A.

SERVICE

513-, 514-, AND 515-TYPE KEY SERVICE UNITS

IDENTIFICATION, CONNECTION, AND MAINTENANCE

1A2 KEY TELEPHONE SYSTEM

CONTENTS PAGE

1. GENERAL 6

2. IDENTIFICATION 7

PURPOSE 7

APPLICATION 7

ORDERING GUIDE 7

DESIGN FEATURES 7

A. General 7

B. 513-Type Key Service Unit . . . 7

C. 514-Type Key Service Unit . . . 8

D. 515-Type Key Service Unit . . . 8

3. INSTALLATION 8

PLANNING 8

INSTALLING 9

4. CONNECTIONS 10

Table F—Connections Required for Connecting an External Power Supply to a 513- or 515-Type KSU Using Furnished Power Cord 25

Table G—Connections Required for Adding 514-Type KSU to a 513-Type KSU 26

CONTENTS PAGE

Table H—Connections for Audible Signaling Circuits 26

Table I—Option Connections for Lamp Circuits 27

Fig. 8—Connections for 400A, B, C, or D (MD) KTU (CO/PBX Line Circuit) 28

Fig. 9—Connections for 400G (MD) KTU (CO/PBX Line Circuit) . . . 30

Fig. 10—Connections for 400H KTU (CO/PBX Line Circuit) 31

Fig. 11—Connections for 401A KTU (Manual Intercom Circuit) 32

Fig. 12—Connections for 407B (MD) or 407C KTU (Dial Intercom, 10-Code Selector Circuit) 33

Fig. 13—Connections for 413A KTU (Auxiliary Ringup Circuit) 34

Fig. 14—Connections for 414A KTU (Manual Signaling, Ringdown Private Line Circuit) 35

Fig. 15—Connections for 415A KTU (Automatic, DC Signaling, Private Line Circuit) 36

Fig. 16—Connections for 416A KTU (Station Line Circuit) 37

NOTICE

Not for use or disclosure outside the
Bell System except under written agreement

Printed in U.S.A.

CONTENTS PAGE

Fig. 17—Connections for 417A KTU (Add-on Conference Circuit) . . . 38

Fig. 18—Connections for 418A KTU (Short Range, DC Signaling, Private Line Circuit) 39

Fig. 19—Connections for 419A KTU (Automatic Signaling, Ringdown Private Line Circuit) 40

Fig. 20—Connections for 420A KTU (Dial Intercom, Long Line Circuit) . 41

Fig. 21—Connections for 421A KTU (Power Failure Transfer Circuit) . . 42

Fig. 22—Connections for 421A KTU (DSS Feature of Dial Intercom) . . 43

Fig. 23—Connections for 421A KTU (Audible Signal Suppression) . . . 44

Fig. 24—Connections for 421A KTU (Preset Conference Circuit) for Dial Intercom Line 45

Fig. 25—Connections for 422B KTU (Dial Intercom, Station Busy Selector Circuit) 46

CONTENTS PAGE

Fig. 26—Connections for 423A KTU (Dial Intercom, Audible Ringback, Dial and Busy Tone Circuit) 47

Fig. 27—Connections for 424B (MD) or 424C KTU (Dial Intercom, 19-Code Selector Circuit) 48

Fig. 28—Connections for 425A (MD) or 425B KTU (Dial Intercom, Flashing Lamp Circuit) 50

Fig. 29—Connections for 426A KTU (Part of TOUCH-TONE Adapter Circuit) 51

Fig. 30—Connections for 427B (Series 4) or C KTU (Part of TOUCH-TONE Adapter Circuit) 51

Fig. 31—Connections for 428A KTU (Multiline Exclusion Circuit) . . . 52

Fig. 32—Connections for 429A (MD) or 429B KTU and 430A KTU (Supplementary Hold Detector and Flutter Generator Circuit) 53

Fig. 33—Connections for 448A KTU (Variable Delay Timer Circuit) . . 54

CONTENTS PAGE

Fig. 34—Connections for 449A KTU (Immediate Transfer Control Circuit) 56

Fig. 35—Connections for 451B KTU (Music-On-Hold Circuit) 58

Fig. 36—Connections for 461A KTU (Manual Signaling, Ringdown Private Line Circuit) 59

Fig. 37—Connections for 476A KTU (Low-Voltage Monitor Circuit) . . 60

Fig. 38—Connections for 469A KTU (Lamp Extender Circuit) 61

Fig. 39—Connections for 471-Type KTU (Battery Reversal Toll Restriction Circuit) 62

Fig. 40—Connections for 479B KTU (Rotary Dial Toll Restriction Circuit) 63

Fig. 41—Connections for 494A KTU (TOUCH-TONE Selector Circuit) . . 64

Fig. 42—Connections for 498A KTU (Music-On-Hold) 65

Fig. 43—Connections From 69E or F Apparatus Mounting to External Connecting Blocks 66

Fig. 44—Power Supply Connections for 69E or F Apparatus Mounting . . 67

Fig. 45—Connections From 400A, B, C, or D (MD) KTU (CO/PBX Line Circuit) in 69E or F Apparatus Mounting to External Connecting Blocks . . 68

Fig. 46—Connections From 400G (MD) KTU (CO/PBX Line Circuit) in 69E or F Apparatus Mounting to External Connecting Blocks 69

Fig. 47—Connections From 400H KTU (CO/PBX Line Circuit) in 69E or F Apparatus Mounting to External Connecting Blocks 70

CONTENTS PAGE

Fig. 48—Connections From 401A KTU (Manual Intercom Line Circuit) in 69E or F Apparatus Mounting to External Connecting Blocks 71

Fig. 49—Connections From 413A KTU (Auxiliary Ringup Circuit) in 69E or F Apparatus Mounting to External Connecting Blocks 72

Fig. 50—Connections From 414A KTU (Manual Signaling, Ringdown Private Line Circuit) in 69E or F Apparatus Mounting to External Connecting Blocks 73

Fig. 51—Connections From 415A KTU (Automatic, DC Signaling, Private Line Circuit) in 69E or F Apparatus Mounting to External Connecting Blocks . . 74

Fig. 52—Connections From 416A KTU (Station Line Circuit) in 69E or F Apparatus Mounting to External Conncting Blocks 74

Fig. 53—Connections From 417A KTU (Add-on Conference Circuit) in 69E or F Apparatus Mounting to External Connecting Blocks 75

Fig. 54—Connections From 418A KTU (Short Range, DC Signaling, Private Line Circuit) in 69E or F Apparatus Mounting to External Connecting Blocks 76

Fig. 55—Connections From 419A KTU (Automatic Signaling, Ringdown Private Line Circuit) in 69E or F Apparatus Mounting to External Connecting Blocks 77

Fig. 56—Connections From 420A KTU (Dial Intercom, Long Line Circuit) in 69E or F Apparatus Mounting to External Connecting Blocks . . . 78

Fig. 57—Connections From 421A KTU (Power Failure Transfer Circuit) in 69E or F Apparatus Mounting to External Connecting Blocks 79

CONTENTS PAGE

Fig. 58—Connections From 421A KTU (DSS Feature of Dial Intercom) in 69E or F Apparatus Mounting to External Connecting Blocks 80

Fig. 59—Connections From 421A KTU (Audible Signal Suppression) in 69E or F Apparatus Mounting to External Connecting Blocks 81

Fig. 60—Connections From 421A KTU (Preset Conference Circuit) to Dial Intercom Line in 69E or F Apparatus Mounting to External Connecting Blocks 82

Fig. 61—Connections From 422A (MD) or 422B KTU (Dial Intercom, Station Busy Selector Circuit) in 69E or F Apparatus Mounting to External Connecting Blocks 83

Fig. 62—Connections From 423A KTU (Dial Intercom, Audible Ringback, Dial and Busy Tone Circuit) in 69E or F Apparatus Mounting to External Connecting Blocks 84

CONTENTS PAGE

Fig. 63—Connections From 424A (MD) or 425B KTU (Dial Intercom, Flashing Lamp Circuit) in 69E or F Apparatus Mounting to External Connecting Blocks 85

Fig. 64—Connections From 426A KTU (Part of TOUCH-TONE Adapter Circuit) in 69E or F Apparatus Mounting to External Connecting Blocks . . . 85

Fig. 65—Connections From 427B (Series 4) or C KTU (Part of TOUCH-TONE Adapter Circuit) in 69E or F Apparatus Mounting to External Connecting Blocks 86

Fig. 66—Connections From 428A KTU (Multiline Exclusion Circuit) in 69E or F Apparatus Mounting to External Connecting Blocks 87

Fig. 67—Connections From 429A (MD) or 429B KTU (Supplementary Hold Detector Circuit) in 69E or F Apparatus Mounting to External Connecting Blocks 87

CONTENTS PAGE

Fig. 68—Connections From 430A KTU (Flutter Generator Circuit) in 69E or F Apparatus Mounting to External Connecting Blocks 88

Fig. 69—Connections From 440A (MD) or 478B KTU (TOUCH-TONE Adapter Circuit) in 69E or F Apparatus Mounting to External Connecting Blocks . . 89

Fig. 70—Connections From 448A KTU (Variable Delay Timer Circuit) in 69E or F Apparatus Mounting to External Connecting Blocks 90

Fig. 71—Connections From 449A KTU (Immediate Transfer Control Circuit) in 69E or F Apparatus Mounting to External Connecting Blocks . . . 92

Fig. 72—Connections From 451B KTU (Music-On-Hold) in 69E or F Apparatus Mounting to External Connecting Blocks 94

Fig. 73—Connections From 461A KTU (Manual Signaling, Ringdown Private Line Circuit) in 69E or F Apparatus Mounting to External Connecting Blocks 95

Fig. 74—Connections From 467A KTU (Low-Voltage Monitor Circuit) in 69E or F Apparatus Mounting to External Connecting Blocks 96

Fig. 75—Connections From 469A KTU (Lamp Extender Circuit) in 69E or F Apparatus Mounting to External Connecting Blocks 96

Fig. 76—Connections From 471-Type (Battery Reversal Toll Registration Circuit) in 69E or F Apparatus Mounting to External Connecting Blocks . . 97

Fig. 77—Connections From 479B KTU (Rotary Dial Toll Restriction Circuit) in 69E or F Apparatus Mounting to External Connecting Blocks . . . 98

CONTENTS PAGE

Fig. 78—Connections for 498A KTU (Music-On-Hold) in 69E or F Apparatus Mounting 99

5. MAINTENANCE 10

Factory Wiring 11

Fig. 79—Factory-Furnished Wiring for AT1 and BT1 Circuits 100

Fig. 80—Factory-Furnished Wiring for Bat. A(1) and Bat. A(2) Circuits . 100

Fig. 81—Factory-Furnished Wiring for Bat. B(1) and Bat. B(2) Circuits . 101

Fig. 82—Factory-Furnished Wiring for MB, MG, and ST Circuits 102

Fig. 83—Factory-Furnished Wiring for Lamp Steady Circuits 103

Fig. 84—Factory-Furnished Wiring for Lamp Flash Circuits 104

Fig. 85—Factory-Furnished Wiring for Lamp Wink Circuits 106

Fig. 86—Factory-Furnished Wiring for ±10 Volt, ±18 Volt, ±105 Volt, and RN Audible Signaling Circuits . . 108

Fig. 87—Factory-Furnished Wiring for Jack 1 109

Fig. 88—Factory-Furnished Wiring for Jack 2 110

Fig. 89—Factory-Furnished Wiring for Jack 3 111

Fig. 90—Factory-Furnished Wiring for Jack 4 111

Fig. 91—Factory-Furnished Wiring for Jack 5 111

Fig. 92—Factory-Furnished Wiring for Jack 6 111

CONTENTS PAGE

Fig. 93—Factory-Furnished Wiring for Jack 7 111

Fig. 94—Factory-Furnished Wiring for Jack 8 112

Fig. 95—Factory-Furnished Wiring for Jack 11 112

Fig. 96—Factory-Furnished Wiring for Jack 12 113

Fig. 97—Factory-Furnished Wiring for Jack 13 113

Fig. 98—Factory-Furnished Wiring for Jack 14 114

Fig. 99—Factory-Furnished Wiring for Jack 15 114

Fig. 100—Factory-Furnished Wiring for Jack 16 114

Fig. 101—Factory-Furnished Wiring for Jack 17 114

Fig. 102—Factory-Furnished Wiring for Jack 18 115

1. GENERAL

1.01 This section provides information for the 513-, 514-, and 515-type Key Service Units (KSUs) used in 1A2 Key Telephone System (KTS) arrangements.

1.02 This section is reissued to add information on the following KTUs:

400H KTU (CO/PBX Line Cicuit)

440A and 478B KTUs (TOUCH-TONE Adapter)

494A KTU (TOUCH-TONE Selector Circuit)

498A KTU and 116A1 Circuit Module (Music-On-Hold).

1.03 This issue of the section is based on the following drawings:

SD-69513-01, Issue 15 (400D (MD) KTU)

SD-69651-01, Issue 1 (400G (MD) KTU)

SD-69475-01, Issue 6 (401A KTU)

SD-69567-01, Issue 15 [407B (MD) or C, 420A, 422A (MD), 422B, 423A, 424B (MD) or C, 425A (MD), 425B, and 494A KTUs]

SD-69590-01, Issue 4 (413A, 421A, 448A, and 449A KTUs)

SD-69559-01, Issue 9 (414A, 415A, 416A, 418A, 419A, 461A, and 469A KTUs)

SD-69561-01, Issue 2 (417A KTU)

SD-69595-01, Issue 8 (426A and 427B, Series 4, or 427C KTUs)

SD-69489-01, Issue 5 (428A KTU)

SD-69922-01, Issue 1 (451B, ⧫498A KTU and 116A1 Circuit Module)⧫

SD-69917-01, Issue 1 (467A KTU)

SD-69530-01, Issue 6 (429A [MD], 429B, and 430A KTUs)

SD-69906-01, Issue 1 (440A KTU)

SD-69931-01, Issue 4 (478B KTU)

SD-69921-01, Issue 1 (471A and 479A KTU)

SD-69597-01, Issue 2 (1A2 KTS, 513-, 514- and 515-Type KSUs)

⧫SD-69942-01, Issue 1 (400H KTU)⧫

If this section is to be used with equipment or apparatus reflecting later issues of the drawings, reference should be made to the SDs and CDs to determine the extent of the changes and the manner in which the section may be affected.

2. IDENTIFICATION

PURPOSE

2.01 The 513-, 514-, and 515-type KSUs (Fig. 1) provide mounting and connecting facilities for 400-series KTUs used to provide 1A2 KTS services.

APPLICATION

2.02 The 513-, 514-, and 515-type KSUs are applicable to the 1A2 Key Telephone System.

ORDERING GUIDE

2.03 Key service units and associated apparatus are ordered as follows:

- Unit, Service, Key, 513A1
- Unit, Service, Key, 513A2 (513A1 with 19C2 power unit)
- Unit, Service, Key, 513A3 (513A1 with 20C2 power unit)
- Unit, Service, Key, 514A1
- Unit, Service, Key, 515A1 (513A1 and 514A1)
- Unit, Service, Key, 515A2 (513A2 and 514A1)
- Unit, Service, Key, 515A3 (513A3 and 514A1)
- Unit, Telephone, Key (order as required).

(a) ***Replaceable Components*** (see Table A):

(b) ***Optional Components*** (order separately; see Table B):

(c) ***Associated Apparatus*** (order separately; see Table C):

DESIGN FEATURES

A. General

(a) Will accept most 400-series KTUs (see Table D for connector selection and arrangement).

(b) Removable cover of glass-reinforced polyester resin.

(c) Arranged for wall mounting. (The 513- and 515-type KSUs may be mounted on a floor stand using a 77-type apparatus mounting. See Section 463-140-100.)

(d) 66-type connecting blocks mounted internally to connect internal and external cables and optional wiring (Fig. 2). Figure 3 shows the terminal arrangement of the 66R-type blocks.

(e) Designation strip holder and tab assembly serve as a retainer to lock KTUs in connectors.

B. 513-Type Key Service Unit

(a) Space is provided on the backboard for one 1A1 matrix block, or a second 66R3 connecting block when required.

(b) Two interrupter connectors (J9, J10) accept any of the KS-type interrupters shown in Table C. The choice of interrupter is determined by the lamp capacity of the system and/or the type of power available for the motor.

(c) Dedicated leads for battery and ground, interrupter, lamp steady, lamp flash, lamp wink, and ringing are wired to the same numbered contacts on each connector (J1-J8). These leads terminate on connecting block 3 (Fig. 4).

(d) Nondedicated leads are terminated on connecting blocks 1 and 2 for connections to station and/or distribution cable, and for strapping between units when required (Fig. 4).

(e) Fuse panel provides power distribution to the connectors for lamp and interrupter functions. See Table E for fusing information.

(f) Can use 19C2, 20C2 or external power unit. The 20C2 power unit includes a 30-Hz frequency generator. ***When ringing voltage is required for a system using a 19C2 power unit, an external source must be provided.***

(g) When required, a 47C power unit is available as a battery reserve power supply for use during commercial power failures. It must be ordered separately along with a KS-20390, List 1 nickel-cadmium battery pack (Table C). When the system has common audible signaling arrangements, an optional 116A frequency generator

must be ordered (Table C) and mounted on the back wall of the power unit. The 47C power unit is interconnected between the standard ac operated power unit and the key telephone equipment. (See Section 518-010-107.) The 47C power unit may be mounted on a rack, in a 16-type apparatus cabinet or equivalent, or in a 513A or 515A1 key service unit when the regular power unit is externally mounted.

(h) If an external power supply is used, as many as three 69F apparatus mountings can be mounted in the space normally occupied by the power unit. Each 69F (Fig. 5) apparatus mounting will accommodate two 4-inch (with the addition of an 834055907 [P-40V590] guide assembly) or one 8-inch 400-series KTU. The 69F apparatus mounting must be ordered separately and installed in the field.

(i) Unit is 17-3/8 inches wide by 17 inches high by 11 inches deep.

C. 514-Type Key Service Unit

(a) For use with the 513-type KSU to provide for growth and/or expansion of features by furnishing additional mounting and connecting facilities (Fig. 1 and 2).

(b) Furnished with hardware for joining the 514A1 KSU to the 513-type KSU.

(c) Dedicated leads for battery and ground, interrupter, lamp flash, lamp steady, lamp wink, and ringing are wired to the same numbered contacts on each connector (J11-J18). These leads terminate on connecting block 3 (Fig. 6).

(d) Nondedicated leads are terminated on connecting block 4 (Fig. 6) for connection of station and/or distribution cable. Some nondedicated leads, in addition to being terminated on the connecting block, are brought out in cable tails for termination on block 1 or 2 of the 513-type KSU, when required. Others are cable leads only, for termination on block 1 or 2 as required. (Do not cut leads. Insulate and store as required.)

(e) Space is provided for a 69E (Fig. 7) apparatus mounting to allow for adding one 8-inch or, with the addition of an 834055907 (P-40V590) guide assembly, two 4-inch KTU printed wiring boards (400-series KTUs). The 69E apparatus mounting must be ordered separately and installed in the field.

(f) Unit is 8-1/36 inches wide by 16-11/16 inches high by 10-11/16 inches deep.

D. 515-Type Key Service Unit

(a) A mechanically joined and partially interwired combination of 513-type and 514A1 KSUs (Fig. 1 and 2).

(b) Intended for use where the initial installation requirement exceeds the service provided by a 513-type KSU.

(c) Unit is 25-1/2 inches wide by 17 inches high by 11 inches deep.

3. INSTALLATION

PLANNING

3.01 Select a wall location for mounting that will allow at least 9-1/2 inches of wall space beyond each side of the backboard to provide for full opening of the carrier assemblies. The same amount of space for the carrier assemblies is required if the KSU is floor-mounted using a 77-type apparatus mounting.

3.02 Customer must provide a 110V ac outlet not under control of a wall switch and separately fused for 2 amperes, if possible.

3.03 When a 513-type KSU is installed, allow at least 17-3/4 inches of space on the right side to provide room to add a 514-type KSU, should it ever be needed.



As shown in Table D, several connectors (jacks) offer limited service to 40- and 80-pin KTUs. The following procedure will simplify installation while allowing for additional features in the future.

3.04 Using Table D, select KTUs to be installed for the desired service features and list in the order they appear from top to bottom of table.

3.05 Assign selected KTUs to connectors in the numerical preference given in the table.

Examples:

(a) An installation in a 513A KSU requires five CO line circuits and a 19-code rotary dial intercom with one intercom station requiring a long-line circuit. KTUs are selected and listed in the following manner:

(1) 424B (MD) or C KTU (19-code dial intercom)

(2) 420A KTU (dial intercom long line circuit)

(3) Five 400-type KTUs (CO/PBX line units).

The 424B (MD) or C is assigned its first (only) choice of connectors, J-1 and J-2. The 420A is assigned its first choice of connectors, J-6. The 400-type KTUs are assigned the remaining connectors in numerical preference: first choice being J-3; second, J-4; third, J-5; fourth, J-7; and fifth, J-8. (If additional KTU services were to be added, they would require the addition of a 514A1 KSU.)

(b) An initial installation in a 515A KSU requires four CO line circuits and a TOUCH-TONE®, 10-code dial intercom. KTUs are selected and listed in the following manner:

(1) ◗494A KTU (TOUCH-TONE Selector)◖

(2) Four 400-type KTUs (CO/PBX line units).

The ◗494A◖ is assigned its first (only) choice of connectors, J-1 and J-2. The 400-type KTUs are assigned in numerical preference from the remaining jacks: first choice being J-3; second, J-4; third, J-5; and fourth, J-6 [if a fifth line (400-type KTU) were to be added, it would be assigned the next available connector, J-15, etc].

3.06 If 69-type apparatus mountings are to be used, externally mounted 66-type connecting blocks must be provided to accommodate the connections.

3.07 Refer to the following sections for additional information required to plan the installation of a key service unit:

- 518-010-101—Centralized Key Telephone Installations
- 518-010-105—Grounding and Special Protection Requirements, Key Telephone Systems
- 518-010-106—Power Unit Selection, Key Telephone Systems
- 518-215-400—Key Telephone Units, Line Services
- 518-215-401—Key Telephone Units, Auxiliary Line Services
- 518-215-402—Key Telephone Units, Intercom Services
- 518-215-403—Key Telephone Units, Control Services.

INSTALLING

3.08 Use care when unpacking to prevent unit from falling out of the cover.

3.09 Remove the cover.

3.10 Mount the KSU on the wall at the selected location, using the provided template and appropriate fasteners or mount on 77-type apparatus mounting following instructions furnished with the apparatus mounting.

3.11 Unlatch and open the carrier assemblies.

3.12 If an external power supply is used, connect it using the power cord furnished with the 513A1 KSU. See Table F for connections.

3.13 Connect the circuit ground to an approved ground.

3.14 If the available 110-volt ac outlet is not a 3-wire grounded type, an adapter must be provided and a frame ground should be installed as follows:

(1) Prepare a separate ground wire by attaching a lug (supplied) to a No. 14 gauge wire of sufficient length to reach from the KSU to an approved local ground (should be same as protector and electric ground).

(2) Attach the ground wire at the KSU by placing the lug under one of the power unit mounting screws. Tighten the screw securely.

3.15 Install 69E or F apparatus mounting, and 1A1 matrix block, or 66R3 connecting block (Fig. 2) if they are required.

3.16 Terminate the telephone set cabling, CO, Centrex, or PBX pairs, option straps, and interblock connections on the connecting blocks.

3.17 If a 514A1 KSU is being added to a 513-type KSU:

(1) Attach the two 834056053 (P-40V605) straps to the back of the 513-type KSU, using four of the eight 802103713 (P-210371) screws provided. Do not tighten the screws.

(2) Slide the 514A1 KSU over the protruding ends of the straps and butt the two units together: 513-type KSU on the left and the 514A1 KSU on the right.

(3) Secure the straps to the 514A1 KSU with the other four 802103713 (P-210371) screws.

(4) Tighten the eight screws.

(5) Fasten the 514A1 KSU to the wall or apparatus mounting. Mounting must be expanded to proper width.

(6) Make required connections to connecting blocks in 513-type KSU. See Table G for connections.

3.18 Close and latch carrier assembly.

3.19 Install the KSUs by inserting the plug-end of the boards into the selected connectors. Make certain all option straps are in place on KTUs as shown in associated connection figure.



Exercise care when handling and inserting plug-in KTUs to avoid damage to the printed wiring and other components.

3.20 Plug power cord into 110-volt ac outlet provided.

3.21 Test operation of KSU for services provided.

3.22 Replace and secure cover. If a 514A1 KSU is being added, attach and secure the 129A cover (furnished with the 514A1 KSU) and return the 128A cover (furnished with the 513A1 KSU) to stock.

4. CONNECTIONS

4.01 Connections for 513-, 514-, and 515-type KSUs are shown in Tables F through I and Fig. 8 through 78. See Table of Contents for connection tables and figures.

5. MAINTENANCE

5.01 Maintenance of a 1A2 KTS is limited to normal station repairs and wiring checks of the mounting facility and terminal field. No field maintenance is to be performed on the plug-in KTUs.

5.02 Care must be used when removing and inserting plug-in KTUs into the connectors to avoid damage to the printed wiring and other components.

5.03 When trouble is encountered, proceed as follows:

(a) Determine if trouble is at individual station or common to the system.

(b) If common to the system:

(1) Check power supply and fuses.

(2) From nature of trouble report, determine which KTU is causing trouble.

(3) Replace KTU with one known to be working properly to determine whether trouble is in KTU or external to it (be sure to strap in the correct options on replacement KTU, as applicable).

(c) If replacement of the KTU does not clear trouble, the trouble is external to the KTU and the complete wiring serving the KTU should be checked. Place original KTU back in service.

5.04 When a KTU or a connector is taken out of service or replaced by another, all nondedicated wiring for the connector or KTU should be removed to avoid damage to a different type KTU should it be inadvertently plugged into the connector.

Factory Wiring

5.05 Factory-furnished wiring for lamp, battery and signaling circuits are shown in the following figures:

Fig. 79—AT1 and BT1 Circuits

Fig. 80—Bat. A (1) and Bat. A (2) Circuits

Fig. 81—Bat. B (1) and Bat. B (2) Circuits

Fig. 82—MB, MG, and ST Circuits

Fig. 83—Lamp Steady Circuits

Fig. 84—Lamp Flash Circuits

Fig. 85—Lamp Wink Circuits

Fig. 86—±10 Volt, ±18 Volt, ±105 Volt, and RN Audible Signaling Circuits

5.06 Factory wiring for connectors J-1 through J-8 and J-11 through J-18 is shown in numerical order in Fig. 87 through 102.

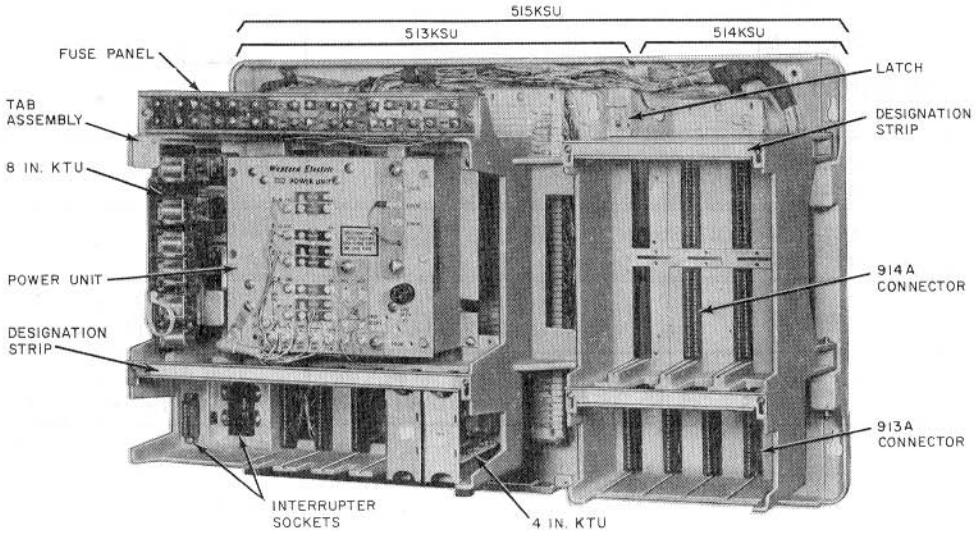

Fig. 1—515A3 Key Service Unit, Cover Removed

TABLE A

REPLACEABLE COMPONENTS

ITEM	•INDICATES KSU USED IN		
	513A1, A2, A3	514A1	515A1, A2, A3
834481699 (P-44Y169) Assembly, Tab	•		•
Cover, 128A	•		
Cover, 129A			•
Fuse, 24C (2-amp)	•		•
Fuse, 24E (1/2-amp)	•		•
Fuse, 24F (5-amp)	•		•
834056012 (P-40V601) Strip, Designation	•		•
834056020 (P-40V602) Strip, Designation		•	•
834481673 (P-44Y167) Strip, Designation	•		•
Unit, Power, 19C2	• (513A2 Only)		• (515A2 Only)
Unit, Power, 20C2	• (513A3 Only)		• (515A3 Only)

TABLE B

OPTIONAL COMPONENTS
(ORDER SEPARATELY)

ITEM	QUANTITY	• INDICATES KSU USED IN		
		513A1, A2, A3	514A1	515A1, A2, A3
Block, Connecting, 66R3	1	•		•
801608845 (P-160884) Screw, RHM (For 66R3 Connecting Block)	2	•		•
Block, Matrix, 1A1	1	•		•
801608530 (P-160853) Screw, RHM (For 1A1 Matrix Block)	2	•		•
Mounting, Apparatus, 69E	1		•	•
Mounting, Apparatus, 69F	As Req'd (3 Max)	•		•
834055907 (P-40V590) Assembly, Guide*	As Req'd	•	•	•
834481699 (P-44Y169) Assembly, Tab*	As Req'd	•	•	•
834481673 (P-44Y167) Strip, Designation*		•	•	•
Mounting, Apparatus, 77C	1	•		•

* Used on 69E or F apparatus mounting.

♦TABLE C♦

ASSOCIATED APPARATUS
(ORDER SEPARATELY)

ITEM	QUANTITY	● INDICATES KSU USED IN (OR WITH)		
		513A1, A2, A3	514A1	515A1, A2, A3
Interrupter, KS-15900, L1 (10V ac)	1	●		●
Interrupter, KS-19175, L1 (10V ac)	1	●		●
Interrupter, KS-19384, L2 (24V dc)	1	●		●
Interrupter, KS-19385, L2 (24V dc)	1	●		●
824013262 (P-40J326) Cord, Power (1-1/2 ft)	1	● (513A2 & 513A3 Only)		● (515A2 & 515A3 Only)
824013270 (P-40J327) Cord, Power (2 ft)	1			
824013288 (P-40J328) Cord, Power (4 ft)	1			
824013296 (P-40J329) Cord, Power (6 ft)	1			
824010995 (P-40J099) Cord, Power (12 ft)	1			
Unit, Power, 47C	1	●		●
Generator, Frequency, 116A (For 47C Power Unit)	1	●		●
Battery, KS-20390, L1 (For 47C Power Unit)	1	●		●

* If the 834059990 (P-40V999) retainer bracket is not in place, the KS-15900L1 interrupter equipped with a locking screw must be used.

♦TABLE D♦

CONNECTOR SELECTION AND ARRANGEMENT OF 400 SERIES KTUs IN 513-, 514-, AND 515-TYPE KSUs

KTU	SIZE (IN.)	SIZE PINS	SERVICE FUNCTION	515 KSU (SEE NOTE)															
				513 KSU¶								514 KSU							
				CONNECTORS								CONNECTORS							
				J 1	J 2	J 3	J 4	J 5	J 6	J 7	J 8	J 11	J 12	J 13	J 14	J 15	J 16	J 17	J 18
				40	40	20	20	20	20	40	40	40	40	40	40	20	20	20	20
407B (MD) or C	8	80	Dial Intercom, 10-Code Selector Ckt	1		*	*	*	*	*	*	*	*	*	*	*	*	*	*
424B (MD) or C	8	80	Dial Intercom, 19-Code Selector Ckt	1		*	*	*	*	*	*	*	*	*	*	*	*	*	*
494A	8	80	TOUCH-TONE Selector Circuit	1		*	*	*	*	*	*	*	*	*	*	*	*	*	*
426A & 427B (Series 4) or 427C	8	80	TOUCH-TONE Adapter Ckt	*	*	*	*	*	*	*	*	1		*	*	*	*	*	*
	8	80		*	*	*	*	*	*	*	*	*	*	1		*	*	*	*
440A or 478B	8	40	TOUCH-TONE Adapter Ckt	Can be used in 69E or F apparatus mounting only.															
425A (MD) or B	8	80	Dial Intercom, Flashing Lamp Circuit	*	*	*	*	*	*	*	*	1		2		*	*	*	*
419A¶	8	80	Automatic Signaling, Ringdown Private Line Ckt	3		*	*	*	*	*	*	1		2		*	*	*	*
479A	8	40	Rotary Dial Toll Restriction	3		*	*	*	*	*	*	1		2		*	*	*	*
429A (MD) or B	4	40	Supplementary Hold Detector Ckt	*	*	*	*	*	*	1	2	*	*	*	*	*	*	*	*

◗TABLE D (Contd)◖

CONNECTOR SELECTION AND ARRANGEMENT OF 400 SERIES KTUs IN 513-, 514-, AND 515-TYPE KSUs

KTU	SIZE (IN.)	SIZE PINS	SERVICE FUNCTION	515 KSU (SEE NOTE) 513 KSU¶ CONNECTORS J 1	J 2	J 3	J 4	J 5	J 6	J 7	J 8	514 KSU CONNECTORS J 11	J 12	J 13	J 14	J 15	J 16	J 17	J 18
				40	40	20	20	20	20	40	40	40	40	40	40	20	20	20	20
421A	4	40	Power Failure Transfer Ckt (General Purpose)	7 †	8 †	*	*	*	*	1	2	3 †	4 †	5 †	6 †	*	*	*	*
			Intercom DSS	*	*	*	*	*	*	1	2	3	4	*	*	*	*	*	*
			Audible Signal Suppression	*	*	*	*	*	*	1	2	3	4	5	6	*	*	*	*
			Preset Conference Circuit	*	*	*	*	*	*	1	2	3	*	4	*	*	*	*	*
448A	4	40	Delayed Transfer Control Circuit	*	*	*	*	*	*	1	2	3	4	5	6	*	*	*	*
449A	4	40	Immediate Transfer Control Circuit	*	*	*	*	*	*	1	2	3	4	5	6	*	*	*	*
422A (MD) or B	4	40	Dial Intercom, Station Busy Ckt	*	*	*	*	*	*	1	2	3	*	4	*	*	*	*	*
417A	4	40	Add-On Conference Circuit	*	*	*	*	*	*	1	2	3	*	4	*	*	*	*	*
428A	4	40	Multiline Exclusion Circuit	16 ‡	15 ‡	14 ‡	13 ‡	12 ‡	11 ‡	1	2	3	10 ‡	4	5 ‡	6 ‡	7 ‡	8 ‡	9 ‡
420A	4	18	Dial Intercom, Long Line Ckt	*	*	8	7	6	5	10	9	14	13	12	11	4	3	2	1

♦TABLE D (Contd)♦

CONNECTOR SELECTION AND ARRANGEMENT OF 400 SERIES KTUs IN 513-, 514-, AND 515-TYPE KSUs

KTU	SIZE (IN.)	SIZE PINS	SERVICE FUNCTION	515 KSU (SEE NOTE) 513 KSU¶ CONNECTORS J1	J2	J3	J4	J5	J6	J7	J8	514 KSU CONNECTORS J11	J12	J13	J14	J15	J16	J17	J18
				40	40	20	20	20	20	40	40	40	40	40	40	20	20	20	20
423A	4	20	Dial Intercom, Aud Ringback, Dial, and Busy Tone Ckt	*	*	8	7	6	5	10	9	14	13	12	11	4	3	2	1
400-Type (Note 2)	4	18	CO/PBX Line Ckt	15	16	1	2	3	4	9	10	11	12	13	14	5	6	7	8
401A	4	18	Manual Intercom Ckt	15	16	8	7	6	5	10	9	14	13	12	11	4	3	2	1
413A	4	18	Aux Ring-up Ckt	15	16	8	7	6	5	10	9	14	13	12	11	4	3	2	1
414A§	4	20	Manual Signaling, Ringdown Private Line Ckt	15	16	14	13	12	11	10	9	8	7	6	5	4	3	2	1
415A	4	18	Automatic, DC Signaling, Private Line Ckt	15	16	8	7	6	5	10	9	14	13	12	11	4	3	2	1
416A	4	20	Station Line Ckt	15	16	8	7	6	5	10	9	14	13	12	11	4	3	2	1
418A	4	20	Short Range, DC Signaling, Private Line Ckt	15	16	8	7	6	5	10	9	14	13	12	11	4	3	2	1
430A	4	20	Flutter Generator Ckt	15	16	8	7	6	5	10	9	14	13	12	11	4	3	2	1
451B (Note 2)	4	40	Music-On-Hold Ckt	5	*	*	*	*	*	1	2	3	*	4	*	*	*	*	*
461A	4	18	Manual Signaling, Ringdown Private Line Ckt	15	16	8	7	6	5	10	9	14	13	12	11	4	3	2	1

◗TABLE D (Contd)◖

CONNECTOR SELECTION AND ARRANGEMENT OF 400 SERIES KTUs IN 513-, 514-, AND 515-TYPE KSUs

KTU	SIZE (IN.)	SIZE PINS	SERVICE FUNCTION	515 KSU (SEE NOTE) 513 KSU¶ CONNECTORS J 1	J 2	J 3	J 4	J 5	J 6	J 7	J 8	514 KSU CONNECTORS J 11	J 12	J 13	J 14	J 15	J 16	J 17	J 18
				40	40	20	20	20	20	40	40	40	40	40	40	20	20	20	20
467A	4	18	Low-Voltage Monitor Ckt	15	16	1	2	3	4	9	10	11	12	13	14	5	6	7	8
469A	4	18	Lamp Extender Ckt	15	16	1	2	3	4	9	10	11	12	13	14	5	6	7	8
471A	4	18	Battery Reversal Toll Restriction	15	16	1	2	3	4	9	10	11	12	13	14	5	6	7	8
498A (Note 1&2)	4	40	Music-On-Hold	5	*	*	*	*	*	1	2	3	*	4	*	*	*	*	*

Note 1: This KTU is equipped to serve 4 lines. With addition of a 116A1 CM, an additional 3 lines may be served when wired in a 69E or F apparatus mounting. The 116A1 CM wiring is not compatible with 515 KSU.

Note 2: The 400H KTU is not compatible with the 451B KTU; therefore, it must be used with the 498A KTU for Music-On-Hold.

* Not usable.

† Restricted to transfer of one station ringer.

‡ One circuit only.

§ See Table H.

¶ If only 513 KSU is used, connector selection begins with lowest number available.

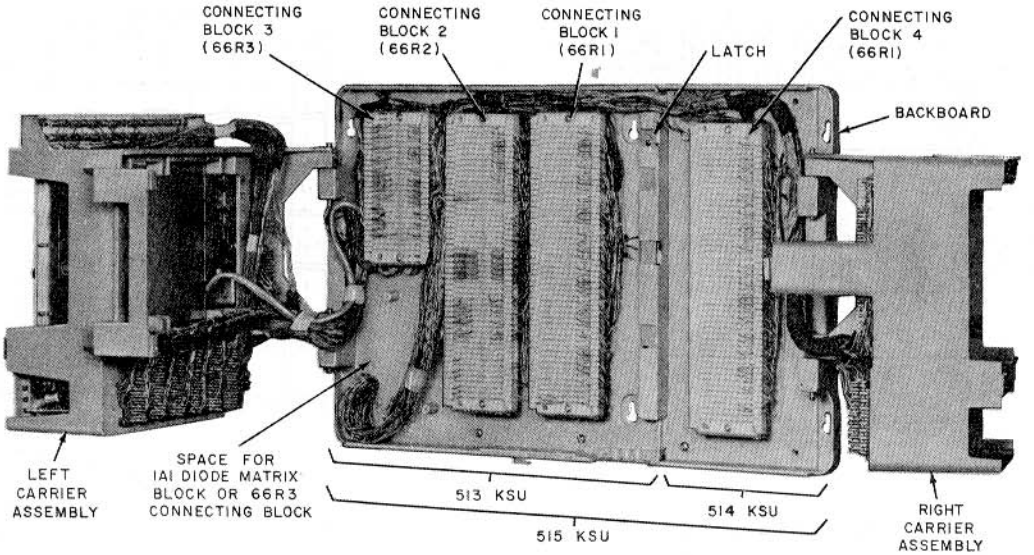

Fig. 2—515-Type Key Service Unit, Carrier Assemblies Open

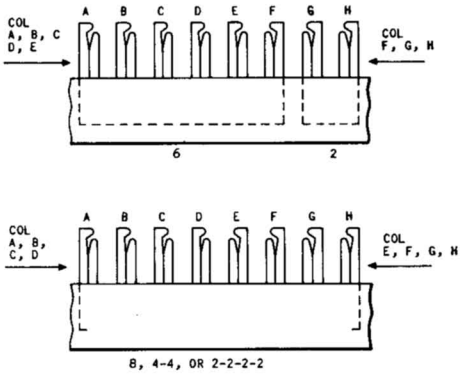

METHOD OF BRINGING IN CONDUCTORS FOR TERMINATION TO COLUMNS ON 66R1, 66R2 OR 66R3 CONNECTING BLOCK

66R1 CONNECTING BLOCK

ROW	COLUMN A	B	C	D	E	F	G	H
1								
48								
49								
50								

LAYOUT OF 66R1 CONNECTING BLOCK

66R2 CONNECTING BLOCK

ROW	COLUMN A	B	C	D	E	F	G	H
1								
12								
13								
14								
15								
23								
24								
28								
29								
30								
31								
32								
42								
43								
50								

LAYOUT OF 66R2 CONNECTING BLOCK

66R3 CONNECTING BLOCK

ROW	COLUMN A	B	C	D	E	F	G	H
1								
20								
21								
24								

LAYOUT OF 66R3 CONNECTING BLOCK

Fig. 3—Layout of 66R1, 66R2, and 66R3 Connecting Blocks

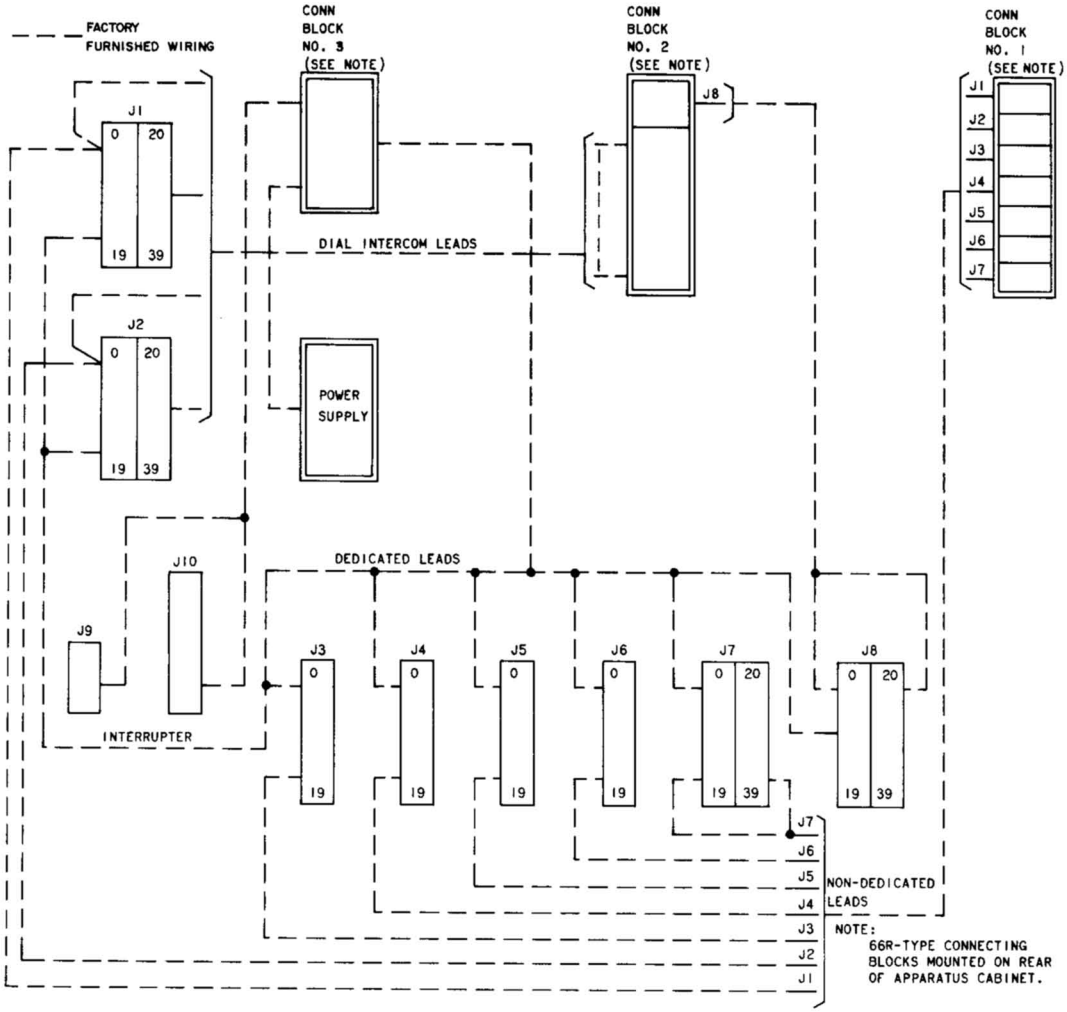

Fig. 4—513-Type Key Service Unit, General Wiring Plan

TABLE E
FUSING FOR 513-, 514-, AND 515-TYPE KSUs

DESIGNATION	FUSE AMP	CIRCUIT	POTENTIAL	CODE
F1	5	Lamp	10V AC	24F
F2				
F3	0.5	MB, MG, ST	10V AC or 24V DC	24E
F4	2	Lamp Wink	10V AC	24C
F5				
F6		Lamp Flash		
F7				
F8				
F9				
F10		Lamp Wink		
F11				
F12		Lamp Steady		
F13				
F14				
F15				

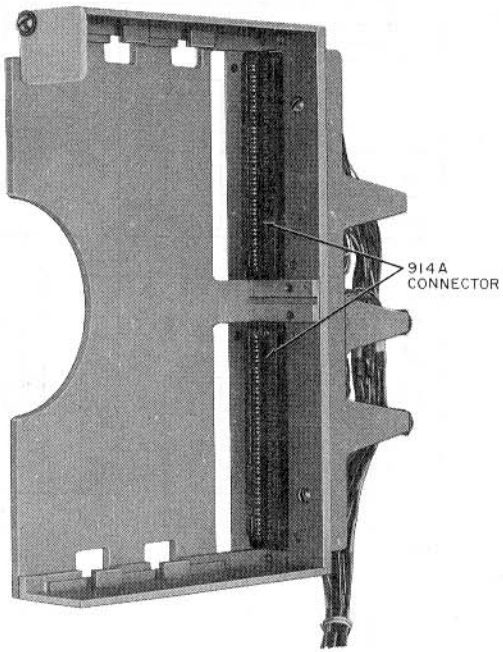

Fig. 5—69F Apparatus Mounting

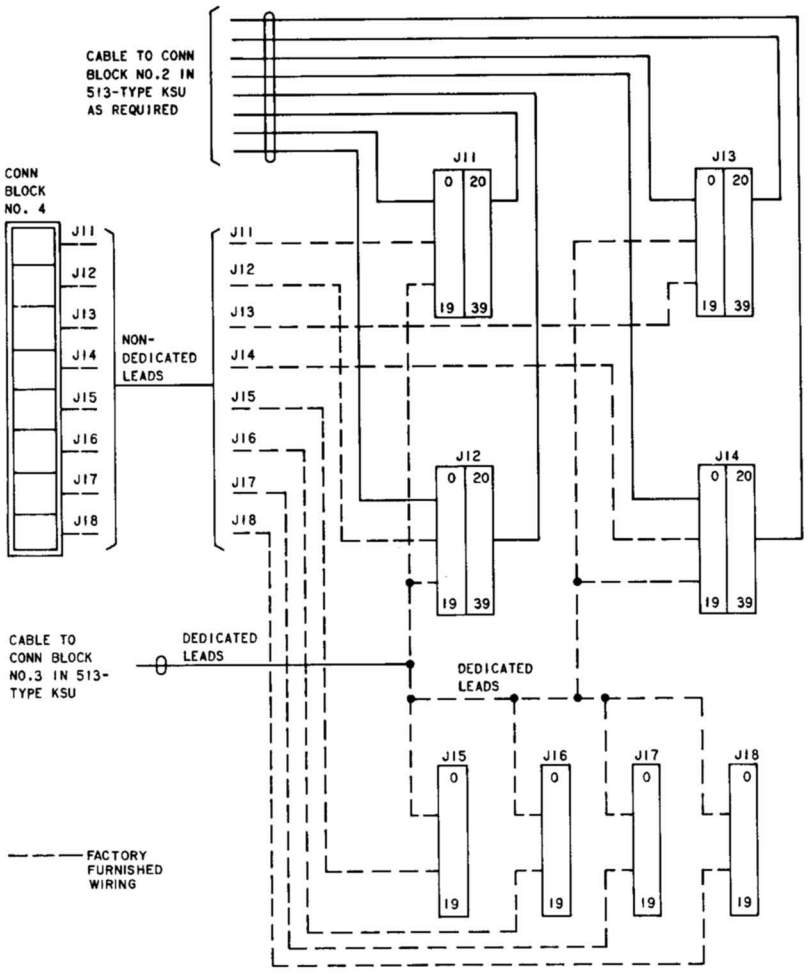

Fig. 6—514-Type Key Service Unit, General Wiring Plan

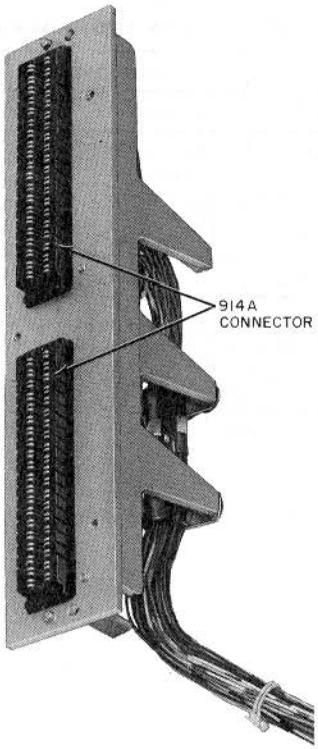

Fig. 7—69E Apparatus Mounting

TABLE F

CONNECTIONS REQUIRED FOR CONNECTING AN EXTERNAL POWER SUPPLY TO A 513- OR 515-TYPE KSU USING FURNISHED POWER CORD

POWER SUPPLY	LEAD DESIG	LEAD COLOR	WIRE GAUGE	CONN ON CONN BLK 3
10V GRD or GRD	MG	R-O	24	10C*
105V GRD or GRD	105V GRD or RG	BL-BK	22	11C*
SIG GRD	GRD B(1)	W-G	24	12D*
	GRD B(2)	R-G		13B*
TALK GRD	GRD A(1)	W-BL		14B*
	GRD A(2)	W-O		15B*
18V GRD	18V GRD	S-BK	22	16A*
10V GRD or GRD	LG1	W-BR	18	17C*
	LG2	W-S		19C*
10V AC or 10V AC INTER.	MB	O-R	24	10G†
105V 30 Hz	±105V	BL-R	22	11G†
B SIG	BAT B(1)	G-W	24	12G†
	BAT B(2)	G-R		13G†
A TALK	BAT A(1)	BL-W		14G†
	BAT A(2)	O-W		15G†
18V AC	±18V	S-R	22	16H†
10V AC	±10V(1)	BR	18	17G†
10V AC or 10V AC INTER.	±10V(2)	S		19G†

* Terminates on left side of connecting block.

† Terminates on right side of connecting block.

TABLE G

CONNECTIONS REQUIRED FOR ADDING 514-TYPE KSU TO A 513-TYPE KSU

LEAD DESIG	LEAD COLOR	BINDER COLOR	CONN ON CONN BLK 3
LF2	S-R	G*	3C
LS2	W-G	G*	4C
RN	BR-R	G*	9B
MG	G-R	G*	10B
GRD B(1)	R-O	G*	12C
GRD A(1)	R-BL	G*	14C
LW2	R-S	G†	3F
ST	R-G	G†	9G
±105V	R-BR	G†	11F
BAT B(1)	O-R	G†	12F
BAT A(1)	BL-R	G†	14F
LF4	S-R	Y*	7C
LS4	W-G	Y*	8C
GRD B(2)	R-O	Y*	13C
GRD A(2)	R-BL	Y*	15C
LW4	R-S	Y†	7F
BAT B(2)	O-R	Y†	13F
BAT A(2)	BL-R	Y†	15F
LF3	S-R	R*	5C
LS3	W-G	R*	6C
LW3	R-S	R†	5F
LF1	S-R	O*	1C
LS1	W-G	O*	2C
LW1	R-S	O†	1F
RG	G	‡	11B
A1	W	‡	13D
LG2	BL	‡	2F
LG1	O	‡	2G
LG4	S	‡	6F
LG3	BR	‡	6G

* Terminates on left side of connecting block.

† Terminates on right side of connecting block.

‡ Stored together in one bundle.

TABLE H

CONNECTIONS FOR AUDIBLE SIGNALING CIRCUITS

AUDIBLE SIGNALING CIRCUIT*	CONNECTING BLOCK 3	
	PLACE STRAPS	REMOVE LEADS
±10V Buzzer	17D to 11D 17E to 11E	From Terminals 11C and 11G (Insulate and Store
±18V Buzzer	16D to 11D 16E to 11E	
±105V Ringer	Factory Provided	

* If ±10V or ±18V is used for audible signaling: KTUs requiring ±105V private line services cannot be used in the 513 KSU. ±105V can be supplied to KTUs in the 514 KSU by moving the (R-BR) lead on terminal 11F of connecting block 3 to spare ±105V terminal.

TABLE I

OPTION CONNECTIONS FOR LAMP CIRCUITS

OPTION	INTERRUPTER	LAMP LOAD	LAMP FLASH		LAMP STEADY		LAMP WINK	
			ON CONNECTING BLOCK 3					
			PLACE STRAPS	REMOVE STRAPS *	PLACE STRAPS	REMOVE STRAPS *	PLACE STRAPS	REMOVE STRAPS *
Z	KS-19175,L1 ±10V Motor	1 to 100 Lamps	1B to 5B 3B to 7B 18D to 19D		2B to 6B 4B to 8B 18D to 19D		1G to 5G 3G to 7G 18D to 19D	
Y	KS-19385,L2 24V DC Motor							
X	KS-15900,L1 ±10V Motor	101 to 200 Lamps		1B to 5B 3B to 7B 18D to 19D		2B to 6B 4B to 8B 18D to 19D		1G to 5G 3G to 7G 18D to 19D
W	KS-19384,L2 24V DC Motor							

* If Z, Y straps are in place.

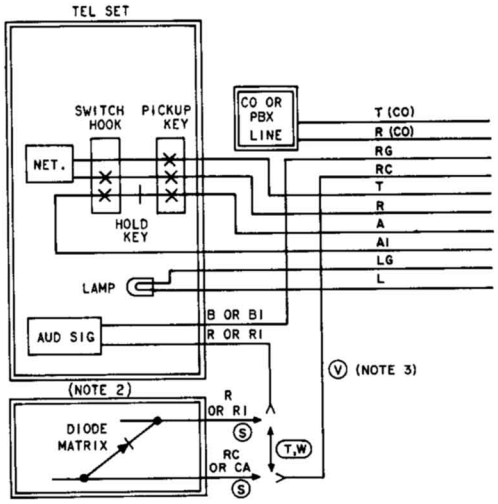

OPTION STRAPPING ON 400-TYPE KTU OPTION BLOCK (NOTE 1)

FEATURES			OPTION	STRAP TERMINALS	
				400D	400A, B AND C
AUDIBLE SIGNALS	INTERRUPTED RING		W	5 TO 8	5 TO 6
	STEADY RING		T	6 TO 8	4 TO 6
	COMMON WITH DIODE MATRIX CONTROL		S	5 TO 8	5 TO 6
VISUAL HOLD	LAMP WINK		Y	7 TO 10	8 TO 9
	LAMP STEADY		X	7 TO 9	7 TO 9
TIME-OUT CONTROL	SHORT TIME DELAY (10 SECONDS)		Z (NOTES 4 AND 5)	1 TO 2	1 TO 2
	LONG TIME DELAY		(NOTE 6)	(NOTE 6)	
DELAYED HOLD RELEASE	RELEASE OF HOLDING BRIDGE FROM CO OR PBX BY LINE CURRENT OPENS GREATER THAN	500 MILLISECONDS WHEN ASSOCIATED WITH NO. 1 ESS HAVING RESWITCH CAPABILITY * (USE 5 UF CAPACITOR, 601A OR EQUIVALENT). †(USE 1.62 UF CAPACITOR, 701G OR EQUIVALENT)	ZC (NOTE 7)	2 TO 3	
		50 MILLISECONDS WHEN ASSOCIATED WITH NO. 5 X-BAR CENTREX HAVING AUTOMATIC PERMANENT SIGNAL RELEASE * (USE 0.5 UF CAPACITOR, 575B OR EQUIVALENT) † (USE 0.162 UF CAPACITOR OR EQUIVALENT)	ZD (NOTE 8)	2 TO 3	

* WHEN USED WITH Z OPTION
† WHEN USED WITH LONG TIME DELAY

Fig. 8—Connections for 400A, B, C, or D (MD) KTU (CO/PBX Line Circuit) (Sheet 1 of 2)

	ROW AND TERMINAL ASSIGNMENT FOR JACKS																
	CONNECTING BLOCK																
	1							2	4								
	J1	J2	J3	J4	J5	J6	J7	J8	J11	J12	J13	J14	J15	J16	J17	J18	
T (CO)	1G	7G	13G	19G	25G	31G	37G	1G	1G	7G	13G	19G	25G	31G	37G	43G	14
R (CO)	2G	8G	14G	20G	26G	32G	38G	2G	2G	8G	14G	20G	26G	32G	38G	44G	9
RG	5G	11G	17G	23G	29G	35G	41G	5G	5G	11G	17G	23G	29G	35G	41G	47G	
RC	6G	12G	18G	24G	30G	36G	42G	6G	6G	12G	18G	24G	30G	36G	42G	48G	1
T	1A-E	7A-E	13A-E	19A-E	25A-E	31A-E	37A-E	1A-E	1A-E	7A-E	13A-E	19A-E	25A-E	31A-E	37A-E	43A-E	12
R	2A-E	8A-E	14A-E	20A-E	26A-E	32A-E	38A-E	2A-E	2A-E	8A-E	14A-E	20A-E	26A-E	32A-E	38A-E	44A-E	13
A	3A-E	9A-E	15A-E	21A-E	27A-E	33A-E	39A-E	3A-E	3A-E	9A-E	15A-E	21A-E	27A-E	33A-E	39A-E	45A-E	16
AI	4A-E	10A-E	16A-E	22A-E	28A-E	34A-E	40A-E	4A-E	4A-E	10A-E	16A-E	22A-E	28A-E	34A-E	40A-E	46A-E	
LG	5A-E	11A-E	17A-E	23A-E	29A-E	35A-E	41A-E	5A-E	5A-E	11A-E	17A-E	23A-E	29A-E	35A-E	41A-E	47A-E	
L	6A-E	12A-E	18A-E	24A-E	30A-E	36A-E	42A-E	6A-E	6A-E	12A-E	18A-E	24A-E	30A-E	36A-E	42A-E	48A-E	8

SHOWN FOR REFERENCE ONLY

TO 400-TYPE KTU

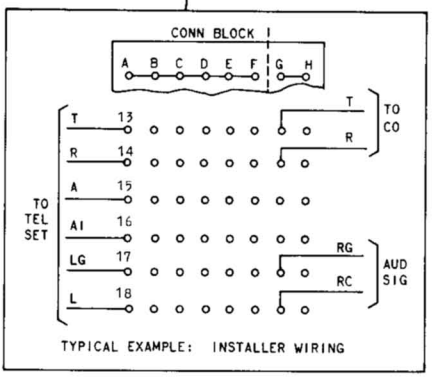

4. TO PROVIDE TIME-OUT CYCLES OF RING-UP CIRCUITS FROM 3.4 TO 7.5 SECONDS, REPLACE Z OPTION STRAP WITH A KS-13490,L1 OR EQUIVALENT (1 WATT) RESISTOR. USE ONE RESISTOR LEAD AS A STRAP BETWEEN TERMINALS 1 AND 2 AND CONNECT THE OTHER LEAD TO TERMINAL 3. USE TABLE BELOW FOR RESISTOR VALUE REQUIRED FOR DESIRED TIME-OUT INTERVAL.

TIME IN SEC FROM 10 SEC TO:	RESISTOR MEGOHM	EFFECT ON DELAYED HOLD RELEASE OPTIONS	
		ZC	ZJ
7.5	1.2	NONE	NONE
6.7	.75	NOT RECOMMENDED (NOTE 5)	
5.0	.39		
3.4	.20		

IF THE TIME-OUT CYCLE IS REDUCED IN CONJUNCTION WITH ZC OR ZJ OPTION, CONNECT THE RESISTOR AND CAPACITOR AS SHOWN BELOW:

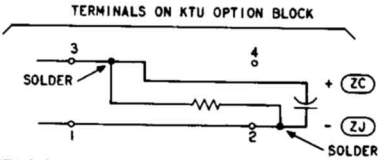

5. WHEN Z OPTION IS PROVIDED WITH ZC OR ZJ OPTIONS, REMOVE THE Z STRAP AND USE THE CAPACITOR LEAD AS A STRAP BETWEEN TERMINALS 1 AND 2.
6. FOR 30 SECOND TIME-OUT CYCLE, REMOVE Z OPTION STRAP BETWEEN TERMINALS 1 AND 2.
7. WHEN THE ZC OPTION IS USED DUE TO THE DELAYED RELEASE OF THE HOLDING BRIDGE, SOME TRANSMISSION LOSS IS ENCOUNTERED FOR APPROXIMATELY 1 SECOND WHEN A STATION REENTERS A HELD CALL.
8. ZD OPTION IS REPLACED BY ZJ OPTION, HOWEVER IT IS NOT NECESSARY TO UPDATE CIRCUITS PREVIOUSLY MODIFIED WITH OPTION ZD.

NOTES:
1. THE 400D KTU IS FACTORY WIRED FOR 10-SECOND TIMEOUT, PLUS WINKING-HOLD LAMP, AND W AND S WIRING OPTIONS.
2. DIODE MATRIX MUST BE FURNISHED LOCALLY.
3. (V) OPTION MAY BE USED IN LOCALLY ENGINEERED OR RELAY COMMON AUDIBLE ARRANGEMENTS.

Fig. 8—Connections for 400A, B, C, or D (MD) KTU (CO/PBX Line Circuit) (Sheet 2 of 2)

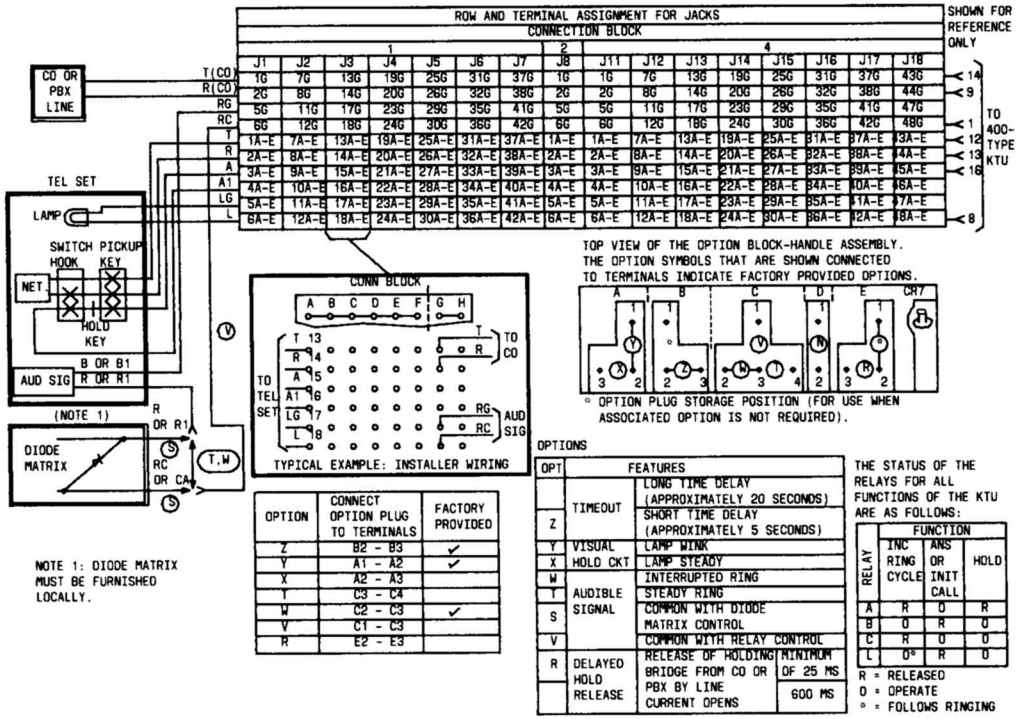

NOTE 1: DIODE MATRIX MUST BE FURNISHED LOCALLY.

OPTION	CONNECT OPTION PLUG TO TERMINALS	FACTORY PROVIDED
Z	B2 - B3	✓
Y	A1 - A2	✓
X	A2 - A3	
T	C3 - C4	
W	C2 - C3	✓
V	C1 - C3	
R	E2 - E3	

OPTIONS

OPT	FEATURES		
Z	TIMEOUT	LONG TIME DELAY (APPROXIMATELY 20 SECONDS)	
		SHORT TIME DELAY (APPROXIMATELY 5 SECONDS)	
Y	VISUAL	LAMP WINK	
X	HOLD CKT	LAMP STEADY	
W	AUDIBLE SIGNAL	INTERRUPTED RING	
T		STEADY RING	
S		COMMON WITH DIODE MATRIX CONTROL	
V		COMMON WITH RELAY CONTROL	
R	DELAYED HOLD RELEASE	RELEASE OF HOLDING BRIDGE FROM CO OR PBX BY LINE CURRENT OPENS	MINIMUM OF 25 MS
			600 MS

THE STATUS OF THE RELAYS FOR ALL FUNCTIONS OF THE KTU ARE AS FOLLOWS:

RELAY	FUNCTION		
	INC RING CYCLE	ANS OR INIT CALL	HOLD
A	R	O	R
B	O	R	O
C	R	O	O
L	O*	R	O

R = RELEASED
O = OPERATE
* = FOLLOWS RINGING

Fig. 9—Connections for 400G (MD) KTU (CO/PBX Line Circuit)

NOTES:
1. DIODE MATRIX MUST BE FURNISHED LOCALLY.
2. RING TIMEOUT IS NOT ADJUSTABLE OCCURS IN 5 TO 8-1/2 SECONDS.
3. INSTALLER PROVIDED EXTERNAL PORTION OF OPTIONS.

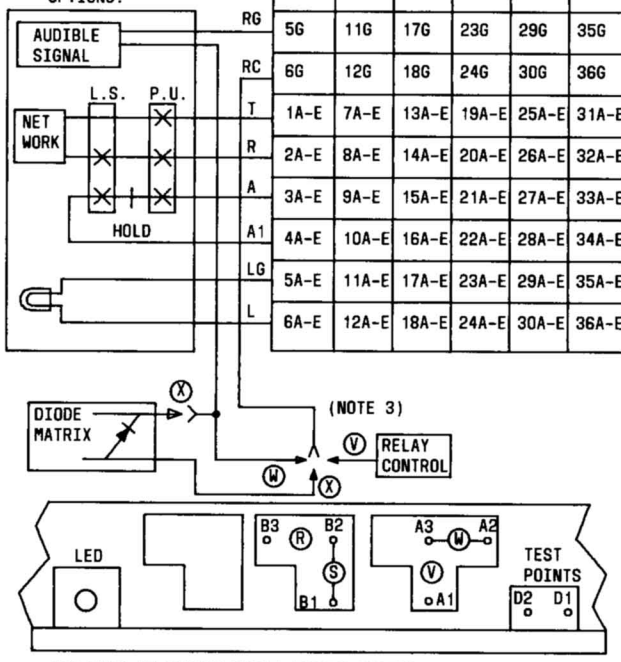

TOP VIEW OF OPTION BLOCK-HANDLE ASSEMBLY. OPTION SYMBOLS SHOWN CONNECTED ARE FACTORY INSTALLED OPTIONS

ROW AND TERMINAL ASSIGNMENT FOR JACKS

CONNECTION BLOCK																SHOWN FOR REFERENCE ONLY
1							2	4								
J1	J2	J3	J4	J5	J6	J7	J8	J11	J12	J13	J14	J15	J16	J17	J18	
1G	7G	13G	19G	25G	31G	37G	1G	1G	7G	13G	19G	25G	31G	37G	43G	14
2G	8G	14G	20G	26G	32G	38G	2G	2G	8G	14G	20G	26G	32G	38G	44G	9
5G	11G	17G	23G	29G	35G	41G	5G	5G	11G	17G	23G	29G	35G	41G	47G	
6G	12G	18G	24G	30G	36G	42G	6G	6G	12G	18G	24G	30G	36G	42G	48G	1
1A-E	7A-E	13A-E	19A-E	25A-E	31A-E	37A-E	1A-E	1A-E	7A-E	13A-E	19A-E	25A-E	31A-E	37A-E	43A-E	12
2A-E	8A-E	14A-E	20A-E	26A-E	32A-E	38A-E	2A-E	2A-E	8A-E	14A-E	20A-E	26A-E	32A-E	38A-E	44A-E	13
3A-E	9A-E	15A-E	21A-E	27A-E	33A-E	39A-E	3A-E	3A-E	9A-E	15A-E	21A-E	27A-E	33A-E	39A-E	45A-E	16
4A-E	10A-E	16A-E	22A-E	28A-E	34A-E	40A-E	4A-E	4A-E	10A-E	16A-E	22A-E	28A-E	34A-E	40A-E	46A-E	
5A-E	11A-E	17A-E	23A-E	29A-E	35A-E	41A-E	5A-E	5A-E	11A-E	17A-E	23A-E	29A-E	35A-E	41A-E	47A-E	
6A-E	12A-E	18A-E	24A-E	30A-E	36A-E	42A-E	6A-E	6A-E	12A-E	18A-E	24A-E	30A-E	36A-E	42A-E	48A-E	8

TO 400H TYPE KTU

OPTION	FEATURE	PLUG POSITION
W	INTERRUPTED RING	A2-A3*
V	COMMON AUDIBLE WITH RELAY CONTROL	A1-A3
X	COMMON AUDIBLE WITH DIODE MATRIX	A2-A3*
S	LONG HOLD R'LSE #1 ESS, #2 ESS, 812, 770, DIMENSION PBX	B1-B2*
R	SHORT HOLD R'LSE ALL OTHERS	B2-B3

* FACTORY PROVIDED

Fig. 10—Connections for 400H KTU (CO/PBX Line Circuit)

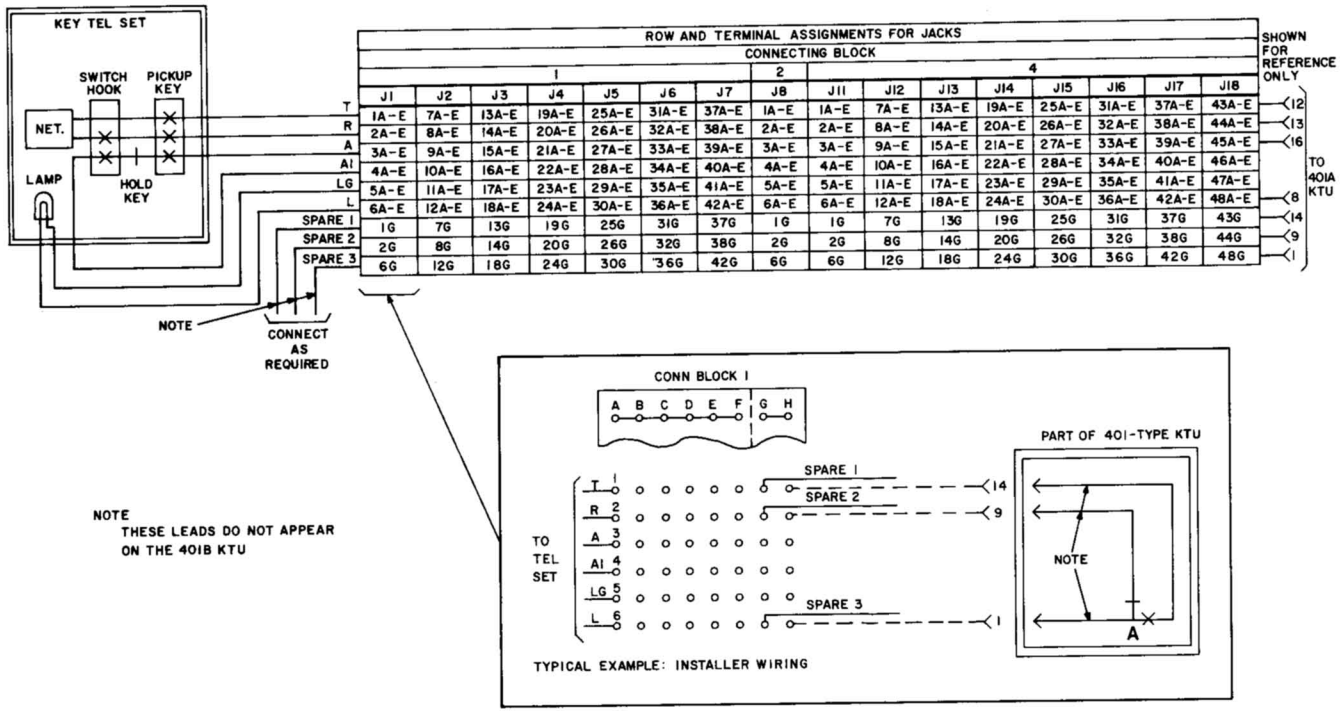

Fig. 11—Connections for 401A KTU (Manual Intercom Circuit)

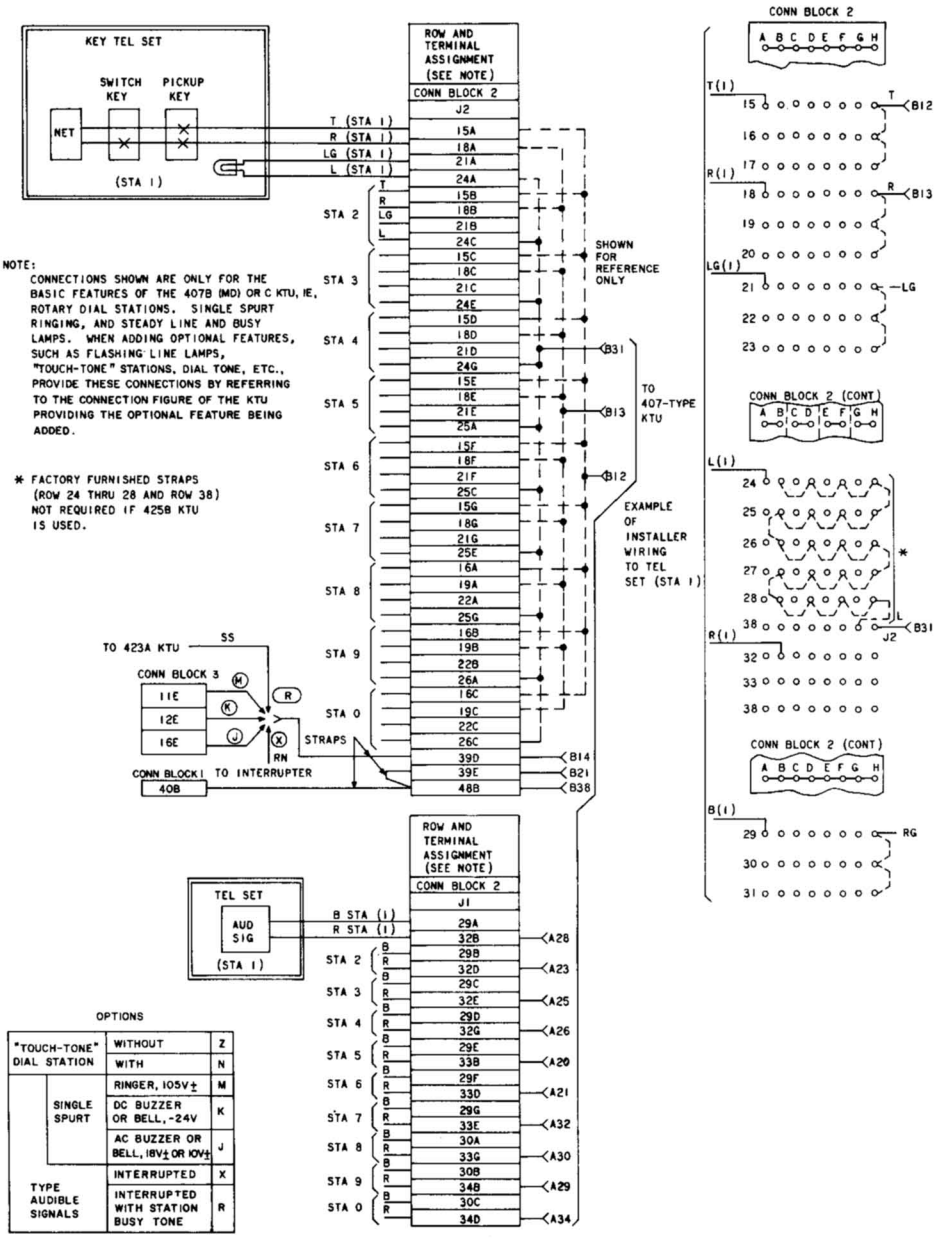

OPTIONS

"TOUCH-TONE" DIAL STATION		WITHOUT	Z
		WITH	N
TYPE AUDIBLE SIGNALS	SINGLE SPURT	RINGER, 105V±	M
		DC BUZZER OR BELL, -24V	K
		AC BUZZER OR BELL, 18V± OR 10V±	J
		INTERRUPTED	X
		INTERRUPTED WITH STATION BUSY TONE	R

Fig. 12—Connections for 407B (MD) or 407C KTU (Dial Intercom, 10-Code Selector Circuit)

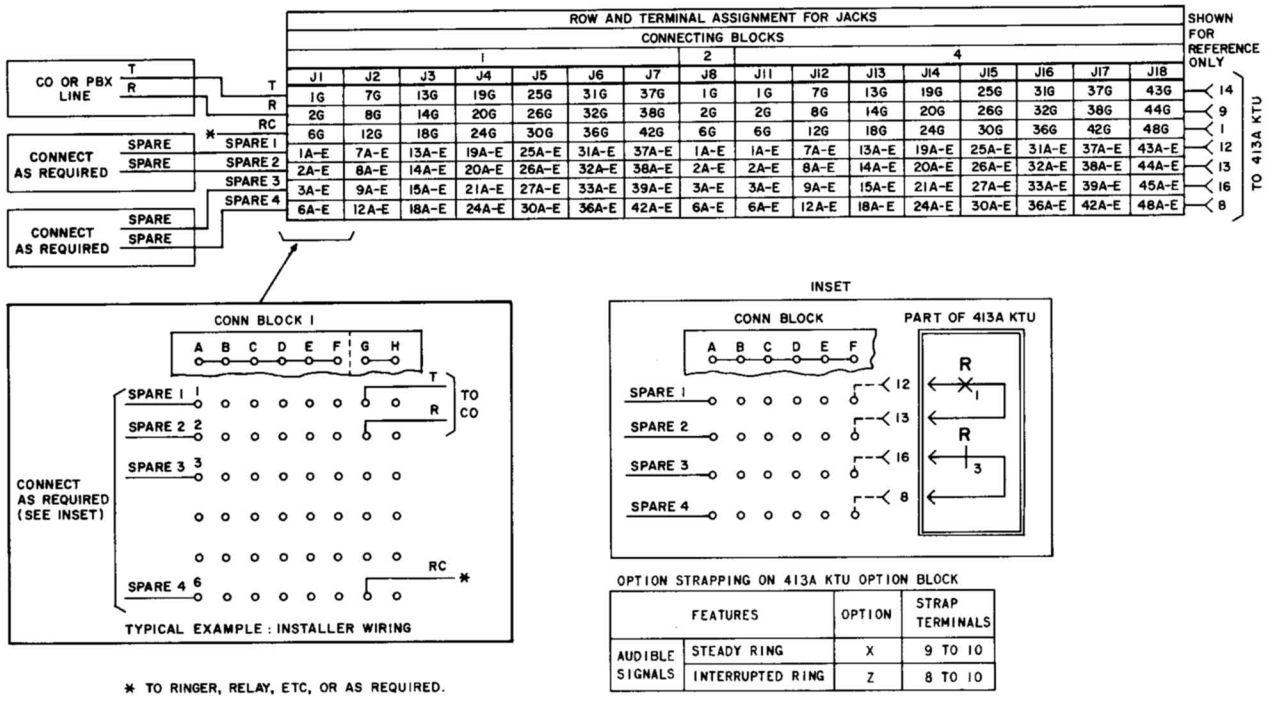

J1	J2	J3	J4	J5	J6	J7	J8	J11	J12	J13	J14	J15	J16	J17	J18	
1G	7G	13G	19G	25G	31G	37G	1G	1G	7G	13G	19G	25G	31G	37G	43G	14
2G	8G	14G	20G	26G	32G	38G	2G	2G	8G	14G	20G	26G	32G	38G	44G	9
6G	12G	18G	24G	30G	36G	42G	6G	6G	12G	18G	24G	30G	36G	42G	48G	1
1A-E	7A-E	13A-E	19A-E	25A-E	31A-E	37A-E	1A-E	1A-E	7A-E	13A-E	19A-E	25A-E	31A-E	37A-E	43A-E	12
2A-E	8A-E	14A-E	20A-E	26A-E	32A-E	38A-E	2A-E	2A-E	8A-E	14A-E	20A-E	26A-E	32A-E	38A-E	44A-E	13
3A-E	9A-E	15A-E	21A-E	27A-E	33A-E	39A-E	3A-E	3A-E	9A-E	15A-E	21A-E	27A-E	33A-E	39A-E	45A-E	16
6A-E	12A-E	18A-E	24A-E	30A-E	36A-E	42A-E	6A-E	6A-E	12A-E	18A-E	24A-E	30A-E	36A-E	42A-E	48A-E	8

Fig. 13—Connections for 413A KTU (Auxiliary Ringup Circuit)

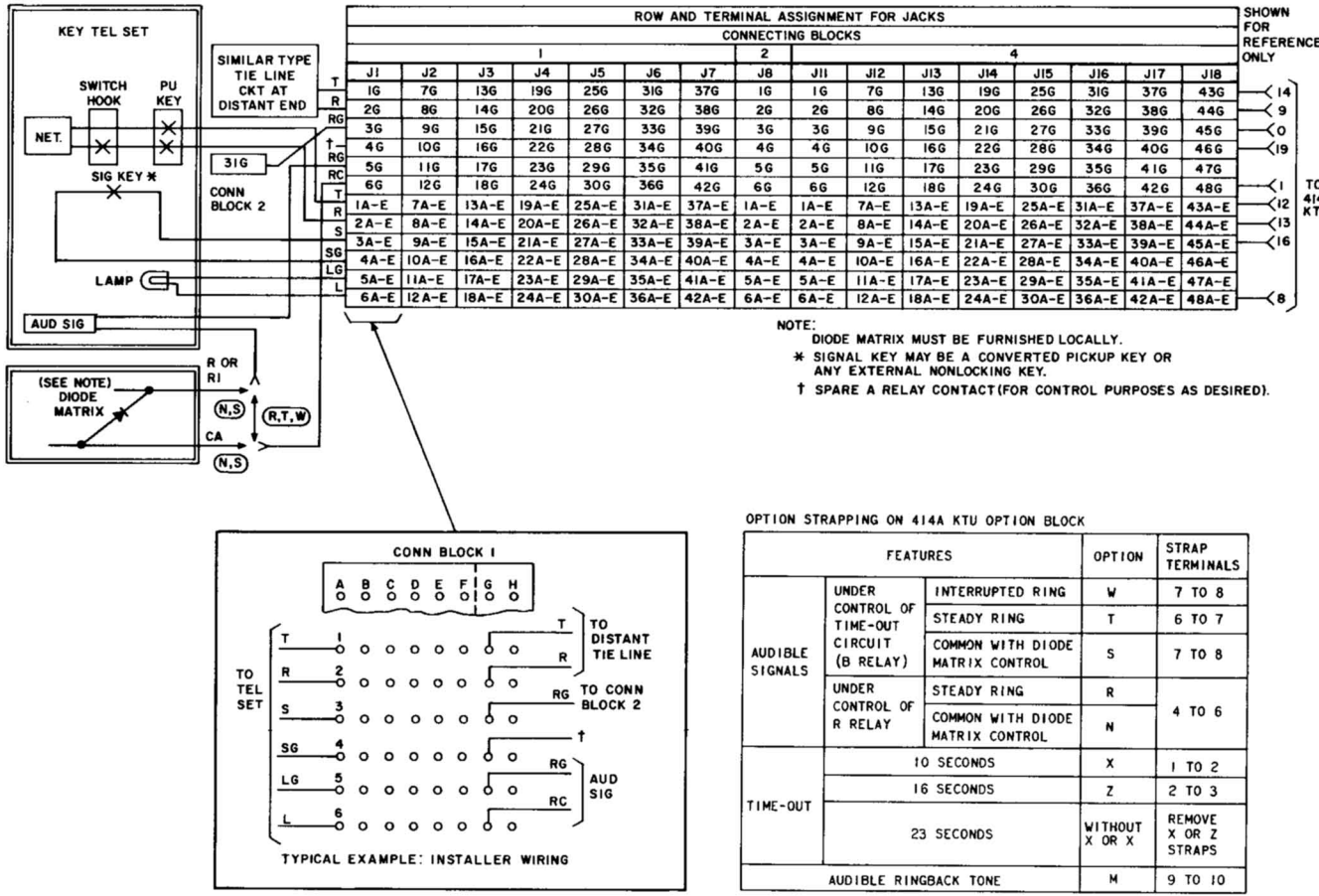

OPTION STRAPPING ON 414A KTU OPTION BLOCK

FEATURES			OPTION	STRAP TERMINALS
AUDIBLE SIGNALS	UNDER CONTROL OF TIME-OUT CIRCUIT (B RELAY)	INTERRUPTED RING	W	7 TO 8
		STEADY RING	T	6 TO 7
		COMMON WITH DIODE MATRIX CONTROL	S	7 TO 8
	UNDER CONTROL OF R RELAY	STEADY RING	R	4 TO 6
		COMMON WITH DIODE MATRIX CONTROL	N	
TIME-OUT	10 SECONDS		X	1 TO 2
	16 SECONDS		Z	2 TO 3
	23 SECONDS		WITHOUT X OR X	REMOVE X OR Z STRAPS
AUDIBLE RINGBACK TONE			M	9 TO 10

Fig. 14—Connections for 414A KTU (Manual Signaling, Ringdown Private Line Circuit)

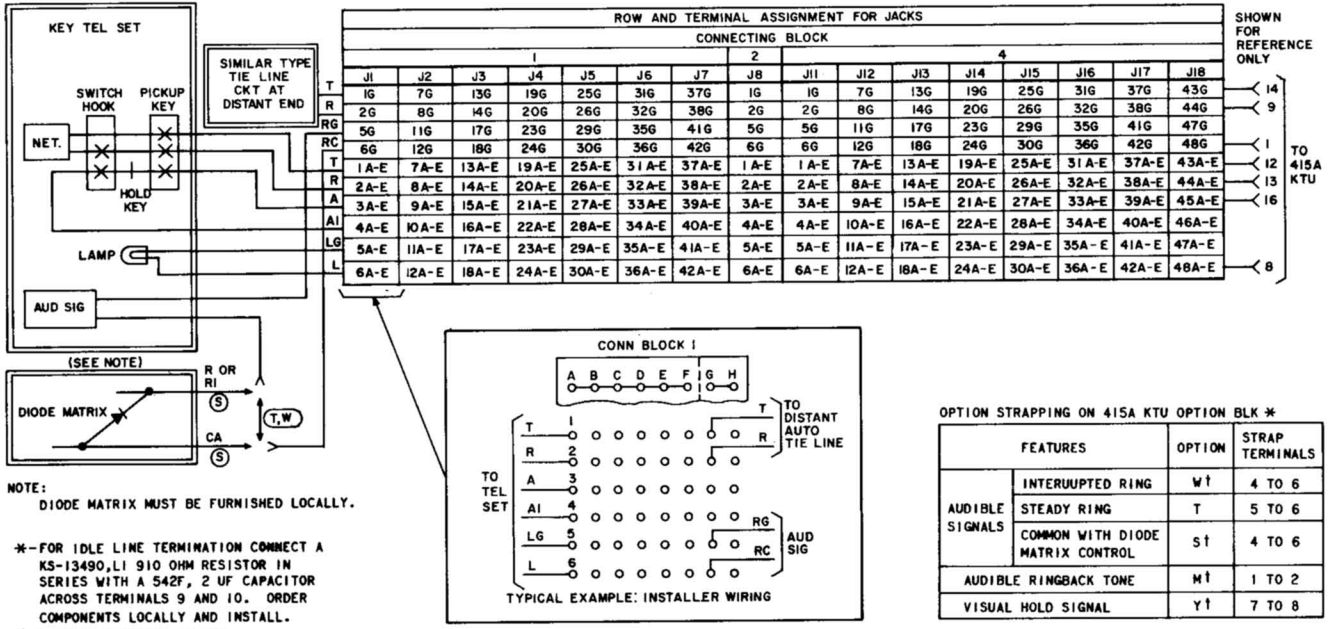

J1	J2	J3	J4	J5	J6	J7	J8	J11	J12	J13	J14	J15	J16	J17	J18	
1G	7G	13G	19G	25G	31G	37G	1G	1G	7G	13G	19G	25G	31G	37G	43G	14
2G	8G	14G	20G	26G	32G	38G	2G	2G	8G	14G	20G	26G	32G	38G	44G	9
5G	11G	17G	23G	29G	35G	41G	5G	5G	11G	17G	23G	29G	35G	41G	47G	
6G	12G	18G	24G	30G	36G	42G	6G	6G	12G	18G	24G	30G	36G	42G	48G	1
1A-E	7A-E	13A-E	19A-E	25A-E	31A-E	37A-E	1A-E	1A-E	7A-E	13A-E	19A-E	25A-E	31A-E	37A-E	43A-E	12
2A-E	8A-E	14A-E	20A-E	26A-E	32A-E	38A-E	2A-E	2A-E	8A-E	14A-E	20A-E	26A-E	32A-E	38A-E	44A-E	13
3A-E	9A-E	15A-E	21A-E	27A-E	33A-E	39A-E	3A-E	3A-E	9A-E	15A-E	21A-E	27A-E	33A-E	39A-E	45A-E	16
4A-E	10A-E	16A-E	22A-E	28A-E	34A-E	40A-E	4A-E	4A-E	10A-E	16A-E	22A-E	28A-E	34A-E	40A-E	46A-E	
5A-E	11A-E	17A-E	23A-E	29A-E	35A-E	41A-E	5A-E	5A-E	11A-E	17A-E	23A-E	29A-E	35A-E	41A-E	47A-E	
6A-E	12A-E	18A-E	24A-E	30A-E	36A-E	42A-E	6A-E	6A-E	12A-E	18A-E	24A-E	30A-E	36A-E	42A-E	48A-E	8

NOTE:
DIODE MATRIX MUST BE FURNISHED LOCALLY.

*-FOR IDLE LINE TERMINATION CONNECT A KS-13490,L1 910 OHM RESISTOR IN SERIES WITH A 542F, 2 UF CAPACITOR ACROSS TERMINALS 9 AND 10. ORDER COMPONENTS LOCALLY AND INSTALL.
†-FACTORY STRAPPED ON KTU.

OPTION STRAPPING ON 415A KTU OPTION BLK *

FEATURES		OPTION	STRAP TERMINALS
AUDIBLE SIGNALS	INTERUUPTED RING	W†	4 TO 6
	STEADY RING	T	5 TO 6
	COMMON WITH DIODE MATRIX CONTROL	S†	4 TO 6
AUDIBLE RINGBACK TONE		M†	1 TO 2
VISUAL HOLD SIGNAL		Y†	7 TO 8

Fig. 15—Connections for 415A KTU (Automatic, DC Signaling, Private Line Circuit)

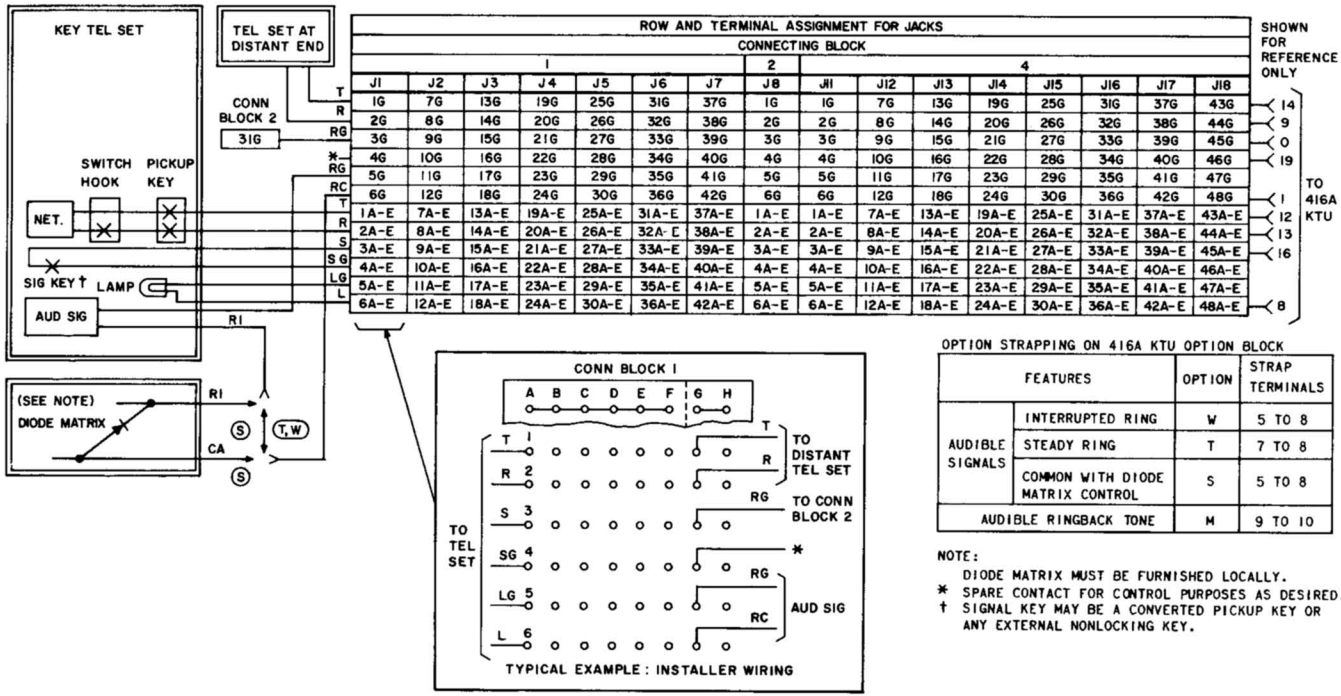

	J1	J2	J3	J4	J5	J6	J7	J8	J11	J12	J13	J14	J15	J16	J17	J18
T	1G	7G	13G	19G	25G	31G	37G	1G	1G	7G	13G	19G	25G	31G	37G	43G
R	2G	8G	14G	20G	26G	32G	38G	2G	2G	8G	14G	20G	26G	32G	38G	44G
RG	3G	9G	15G	21G	27G	33G	39G	3G	3G	9G	15G	21G	27G	33G	39G	45G
*RG	4G	10G	16G	22G	28G	34G	40G	4G	4G	10G	16G	22G	28G	34G	40G	46G
RC	5G	11G	17G	23G	29G	35G	41G	5G	5G	11G	17G	23G	29G	35G	41G	47G
T	6G	12G	18G	24G	30G	36G	42G	6G	6G	12G	18G	24G	30G	36G	42G	48G
R	1A-E	7A-E	13A-E	19A-E	25A-E	31A-E	37A-E	1A-E	1A-E	7A-E	13A-E	19A-E	25A-E	31A-E	37A-E	43A-E
S	2A-E	8A-E	14A-E	20A-E	26A-E	32A-E	38A-E	2A-E	2A-E	8A-E	14A-E	20A-E	26A-E	32A-E	38A-E	44A-E
SG	3A-E	9A-E	15A-E	21A-E	27A-E	33A-E	39A-E	3A-E	3A-E	9A-E	15A-E	21A-E	27A-E	33A-E	39A-E	45A-E
LG	4A-E	10A-E	16A-E	22A-E	28A-E	34A-E	40A-E	4A-E	4A-E	10A-E	16A-E	22A-E	28A-E	34A-E	40A-E	46A-E
L	5A-E	11A-E	17A-E	23A-E	29A-E	35A-E	41A-E	5A-E	5A-E	11A-E	17A-E	23A-E	29A-E	35A-E	41A-E	47A-E
	6A-E	12A-E	18A-E	24A-E	30A-E	36A-E	42A-E	6A-E	6A-E	12A-E	18A-E	24A-E	30A-E	36A-E	42A-E	48A-E

SHOWN FOR REFERENCE ONLY: 14, 9, 0, 19, 1, 12, 13, 16, 8

OPTION STRAPPING ON 416A KTU OPTION BLOCK

FEATURES		OPTION	STRAP TERMINALS
AUDIBLE SIGNALS	INTERRUPTED RING	W	5 TO 8
	STEADY RING	T	7 TO 8
	COMMON WITH DIODE MATRIX CONTROL	S	5 TO 8
AUDIBLE RINGBACK TONE		M	9 TO 10

NOTE:
DIODE MATRIX MUST BE FURNISHED LOCALLY.
* SPARE CONTACT FOR CONTROL PURPOSES AS DESIRED.
† SIGNAL KEY MAY BE A CONVERTED PICKUP KEY OR ANY EXTERNAL NONLOCKING KEY.

Fig. 16—Connections for 416A KTU (Station Line Circuit)

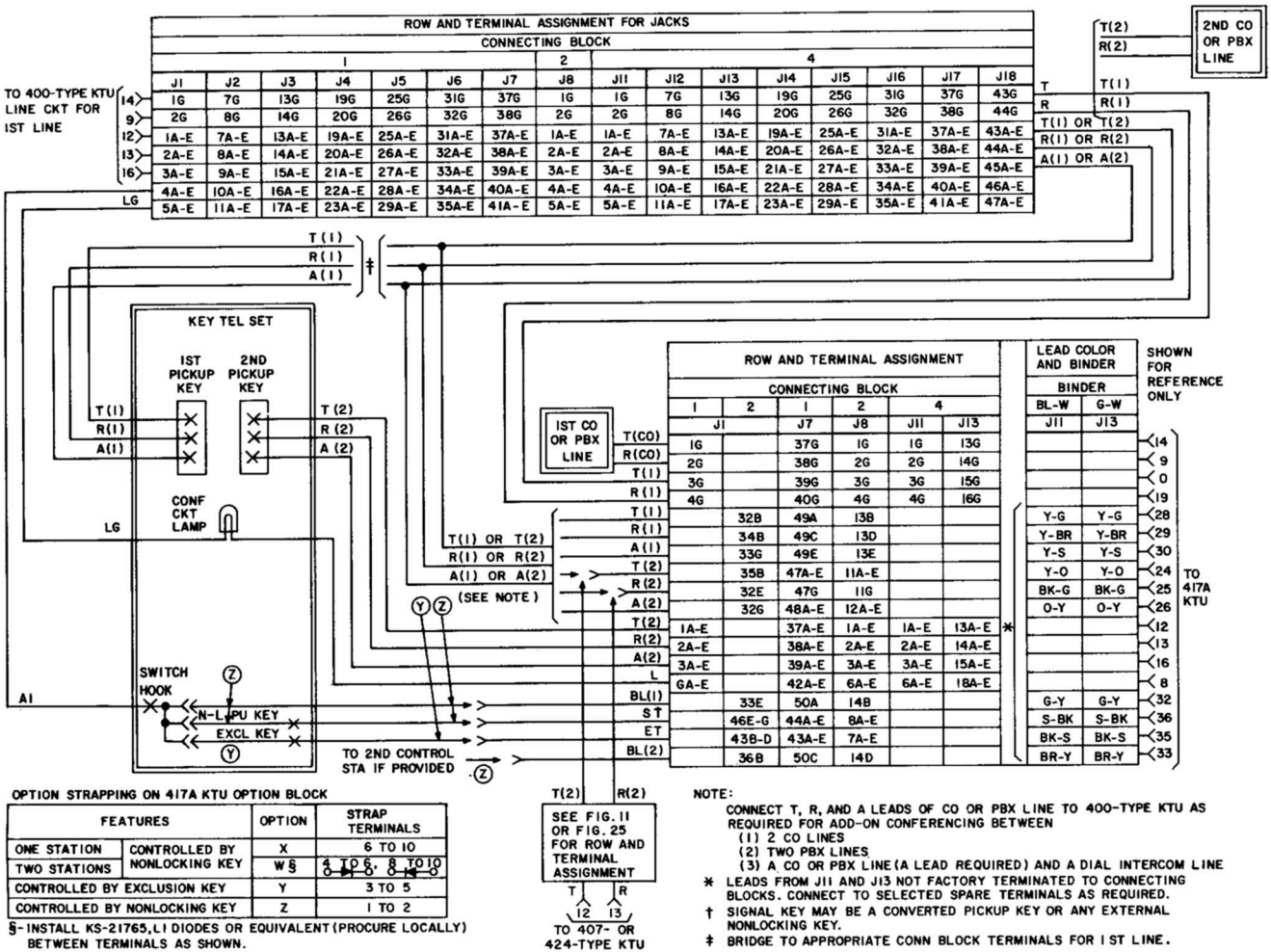

OPTION STRAPPING ON 417A KTU OPTION BLOCK

FEATURES		OPTION	STRAP TERMINALS
ONE STATION	CONTROLLED BY NONLOCKING KEY	X	6 TO 10
TWO STATIONS		W§	4 TO 6, 8 TO 10
CONTROLLED BY EXCLUSION KEY		Y	3 TO 5
CONTROLLED BY NONLOCKING KEY		Z	1 TO 2

§-INSTALL KS-21765, L1 DIODES OR EQUIVALENT (PROCURE LOCALLY) BETWEEN TERMINALS AS SHOWN.

NOTE:

CONNECT T, R, AND A LEADS OF CO OR PBX LINE TO 400-TYPE KTU AS REQUIRED FOR ADD-ON CONFERENCING BETWEEN
(1) 2 CO LINES
(2) TWO PBX LINES
(3) A CO OR PBX LINE (A LEAD REQUIRED) AND A DIAL INTERCOM LINE

* LEADS FROM J11 AND J13 NOT FACTORY TERMINATED TO CONNECTING BLOCKS. CONNECT TO SELECTED SPARE TERMINALS AS REQUIRED.

† SIGNAL KEY MAY BE A CONVERTED PICKUP KEY OR ANY EXTERNAL NONLOCKING KEY.

‡ BRIDGE TO APPROPRIATE CONN BLOCK TERMINALS FOR 1ST LINE.

Fig. 17—Connections for 417A KTU (Add-on Conference Circuit)

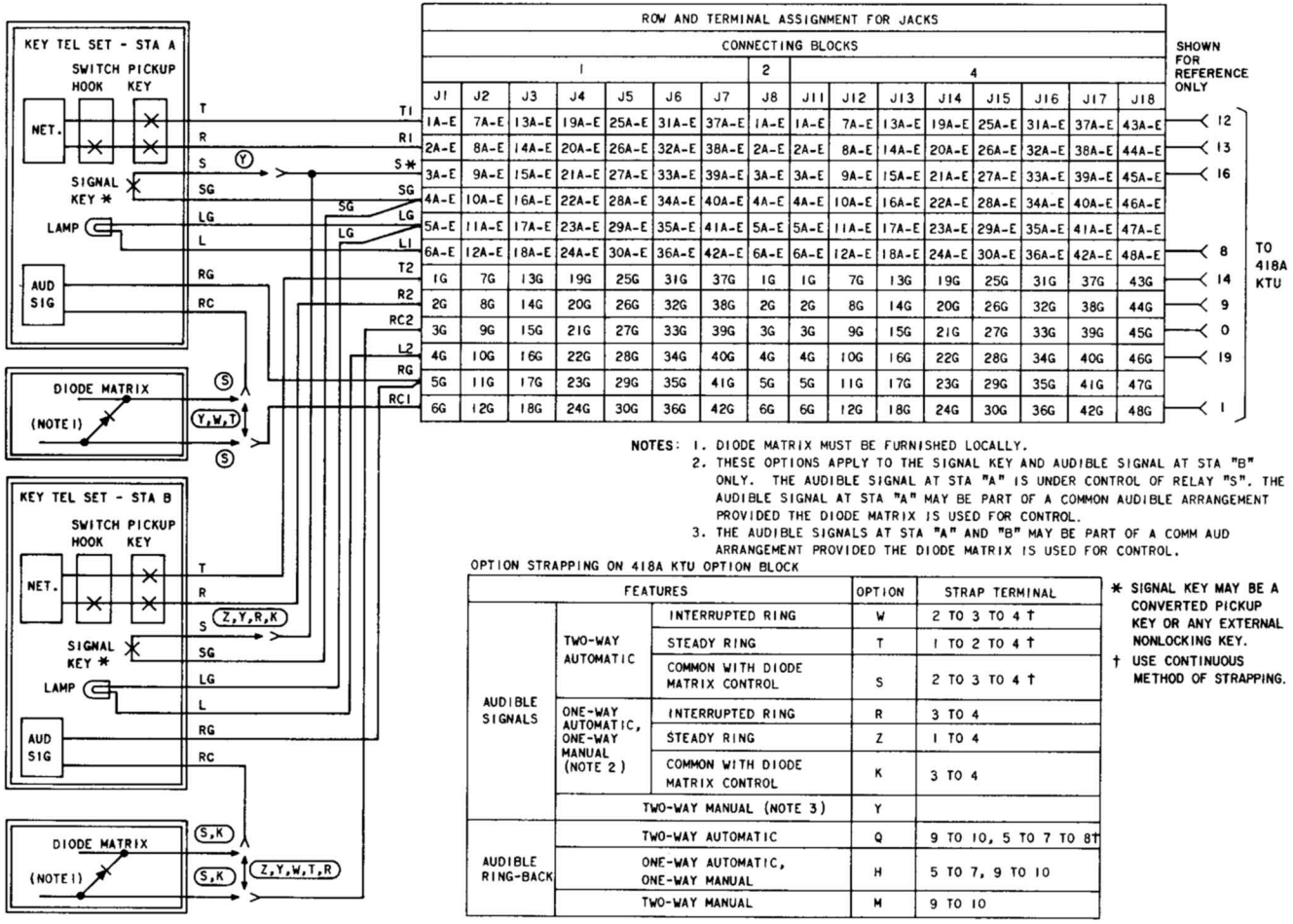

NOTES:
1. DIODE MATRIX MUST BE FURNISHED LOCALLY.
2. THESE OPTIONS APPLY TO THE SIGNAL KEY AND AUDIBLE SIGNAL AT STA "B" ONLY. THE AUDIBLE SIGNAL AT STA "A" IS UNDER CONTROL OF RELAY "S". THE AUDIBLE SIGNAL AT STA "A" MAY BE PART OF A COMMON AUDIBLE ARRANGEMENT PROVIDED THE DIODE MATRIX IS USED FOR CONTROL.
3. THE AUDIBLE SIGNALS AT STA "A" AND "B" MAY BE PART OF A COMM AUD ARRANGEMENT PROVIDED THE DIODE MATRIX IS USED FOR CONTROL.

OPTION STRAPPING ON 418A KTU OPTION BLOCK

FEATURES			OPTION	STRAP TERMINAL
AUDIBLE SIGNALS	TWO-WAY AUTOMATIC	INTERRUPTED RING	W	2 TO 3 TO 4 †
		STEADY RING	T	1 TO 2 TO 4 †
		COMMON WITH DIODE MATRIX CONTROL	S	2 TO 3 TO 4 †
	ONE-WAY AUTOMATIC, ONE-WAY MANUAL (NOTE 2)	INTERRUPTED RING	R	3 TO 4
		STEADY RING	Z	1 TO 4
		COMMON WITH DIODE MATRIX CONTROL	K	3 TO 4
	TWO-WAY MANUAL (NOTE 3)		Y	
AUDIBLE RING-BACK	TWO-WAY AUTOMATIC		Q	9 TO 10, 5 TO 7 TO 8†
	ONE-WAY AUTOMATIC, ONE-WAY MANUAL		H	5 TO 7, 9 TO 10
	TWO-WAY MANUAL		M	9 TO 10

* SIGNAL KEY MAY BE A CONVERTED PICKUP KEY OR ANY EXTERNAL NONLOCKING KEY.
† USE CONTINUOUS METHOD OF STRAPPING.

Fig. 18—Connections for 418A KTU (Short Range, DC Signaling, Private Line Circuit)

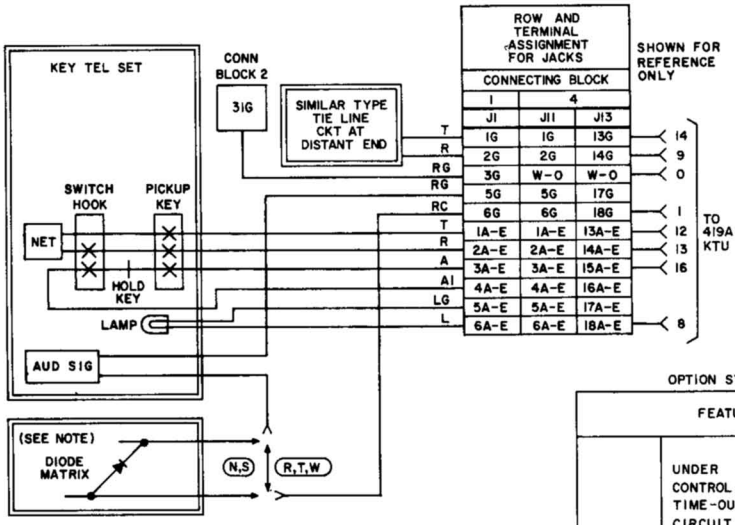

OPTION STRAPPING ON 419A KTU OPTION BLOCK

FEATURES			OPTION	STRAP TERMINALS
AUDIBLE SIGNALS	UNDER CONTROL OF TIME-OUT CIRCUIT (B RELAY)	INTERRUPTED RING	W	6 TO 8
		STEADY RING	T	5 TO 6
		COMMON WITH DIODE MATRIX CONTROL	S	6 TO 8
	UNDER CONTROL OF R RELAY	STEADY RING	R	3 TO 5
		COMMON WITH DIODE MATRIX CONTROL	N	
TIME-OUT	6 SECONDS		X	9 TO 10
	17 SECONDS		Z	7 TO 10
	25 SECONDS		WITHOUT X OR Z	REMOVE X OR Z STRAPS
AUDIBLE RINGBACK TONE			M	1 TO 2

Fig. 19—Connections for 419A KTU (Automatic Signaling, Ringdown Private Line Circuit)

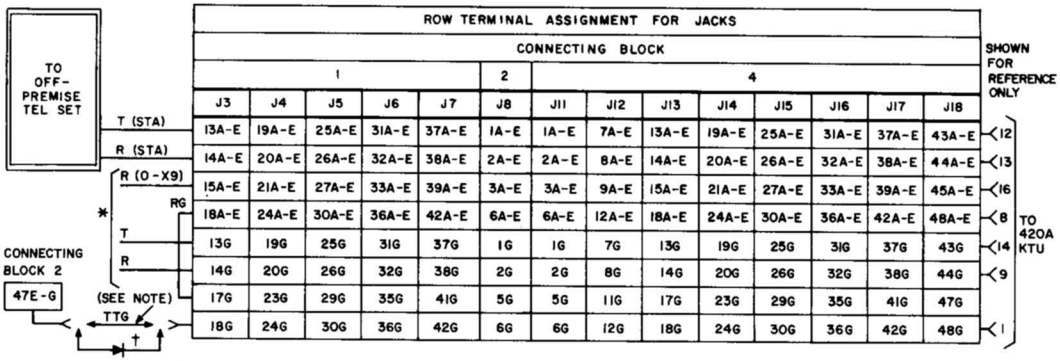

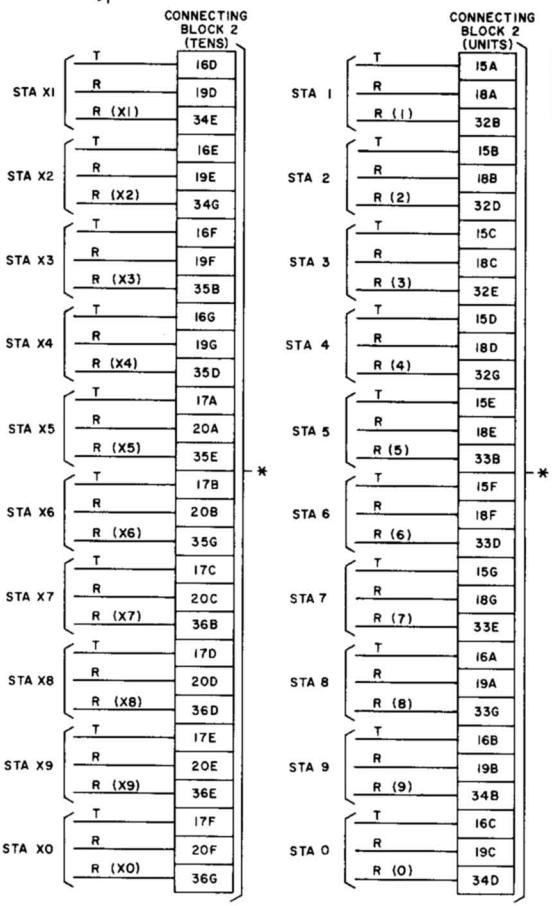

OPTION STRAPPING ON 420A KTU OPTION BLOCK

FEATURE		OPTION	STRAP TERMINALS
AUDIBLE SIGNALS	AC BUZZER, ±18V OR ±10V	J	1 TO 4, 7 TO 8
	DC BUZZER, 24V DC	K	
	RINGER, ±105V STEADY	M	2 TO 4, 7 TO 8

NOTE:

WHEN MORE THAN ONE 420A KTU IS USED, THE TTG CONNECTIONS MUST BE MULTIPLED USING A CONTINUOUS STRAP.

EXAMPLE:

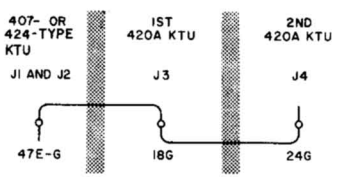

* TO ASSIGNED STATION OF DIAL INTERCOM (ANY DIGIT MAY BE ASSIGNED TO AN OFF-PREMISE STATION)

† WHEN INTERCOMMUNICATING SYSTEM IS EQUIPPED WITH THE "TOUCH-TONE" ADAPTER (426A AND 427B, SERIES 4, OR C KTUS) PROVIDE A 400J DIODE FOR EACH 420A KTU INSTALLED.

Fig. 20—Connections for 420A KTU (Dial Intercom, Long Line Circuit)

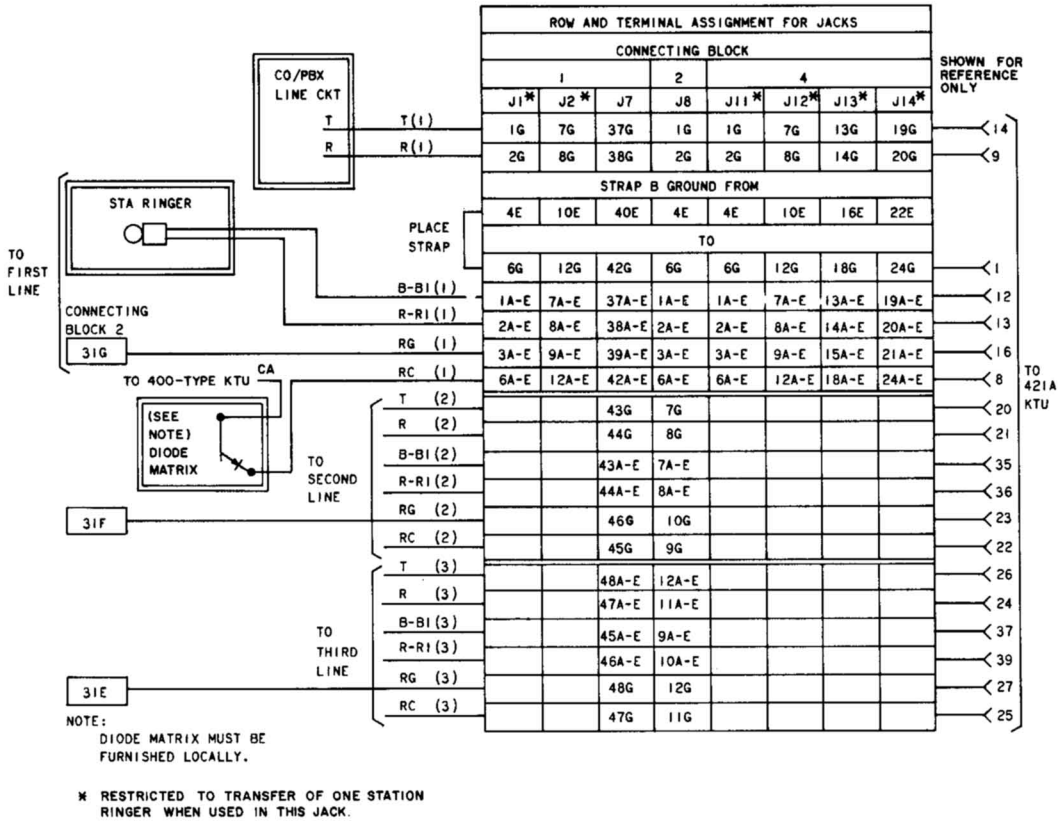

Fig. 21—Connections for 421A KTU (Power Failure Transfer Circuit)

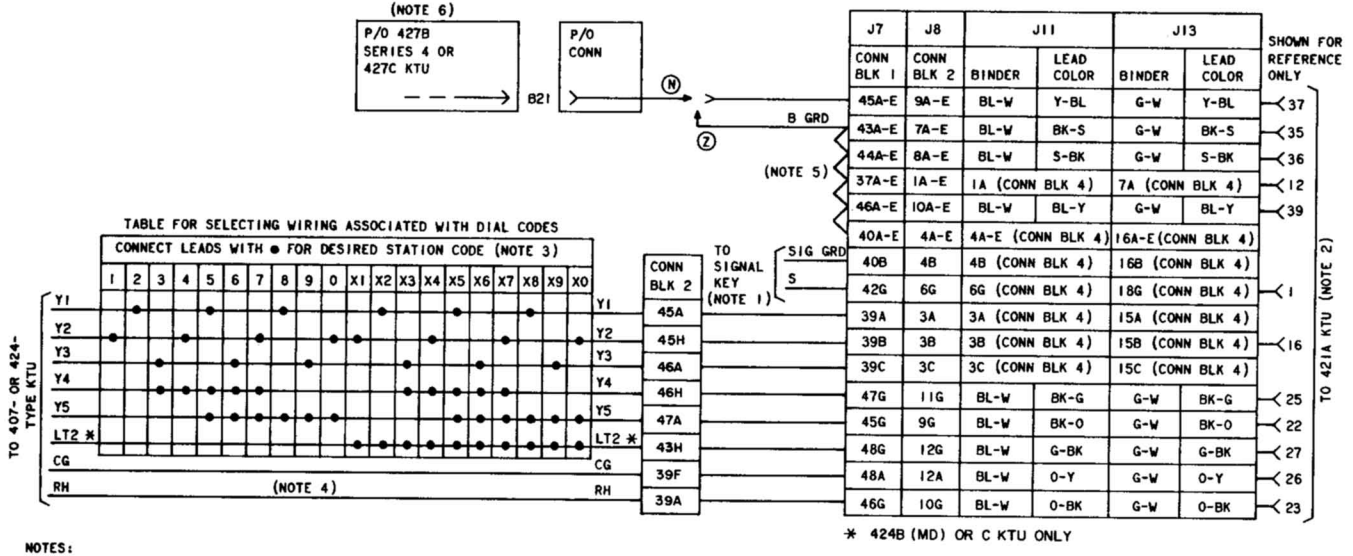

NOTES:

1. PROVIDE SEPARATE SIGNAL KEY FOR EACH STATION CODE TO BE SELECTED.
2. PROVIDE A SEPARATE 421A KTU FOR EACH STATION CODE TO BE SELECTED.
3. SELECT CODE AND CONNECT LEADS FOR SELECTED CODE AS SHOWN IN VERTICAL COLUMN.
4. A 400J DIODE (PROCURED LOCALLY) MUST BE CONNECTED AS SHOWN BELOW BETWEEN THE LK AND RH TERMINALS OF THE 407B (MD) OR C, OR 424B (MD) OR C KTU WHEN WHEN PROVIDING DIAL TONE.

LK ⟶|⟵ RH

5. USE CONTINUOUS METHOD OF STRAPPING ON CONNECTING BLOCKS FOR B GROUND.
6. IF MORE THAN ONE 421A KTU IS USED FOR DSS, CONNECT AS SHOWN:

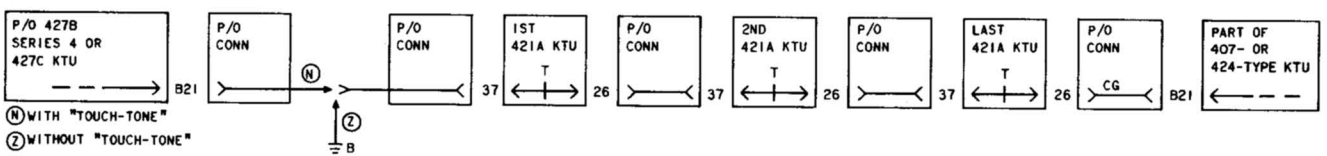

Fig. 22—Connections for 421A KTU (DSS Feature of Dial Intercom)

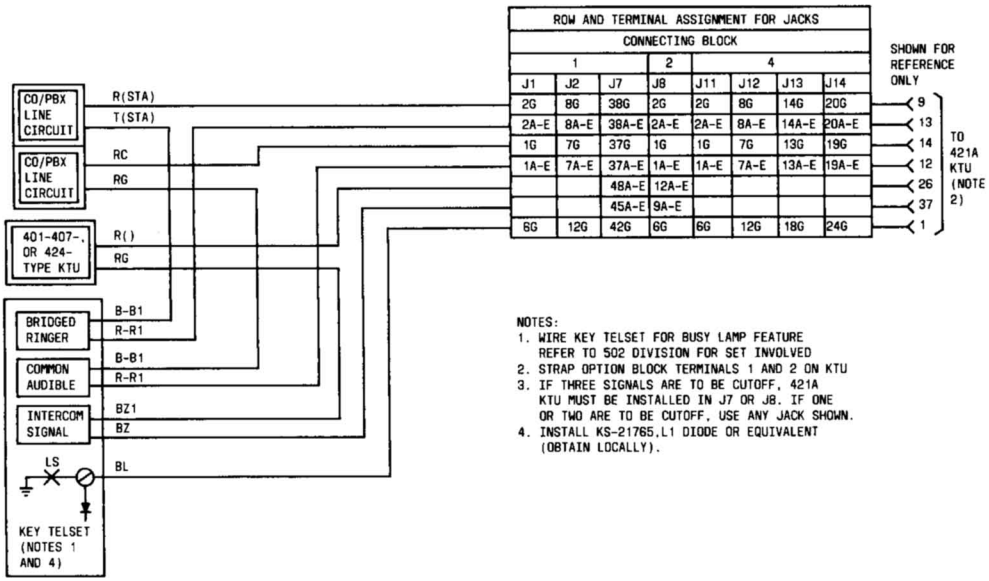

Fig. 23—Connections for 421A KTU (Audible Signal Suppression)

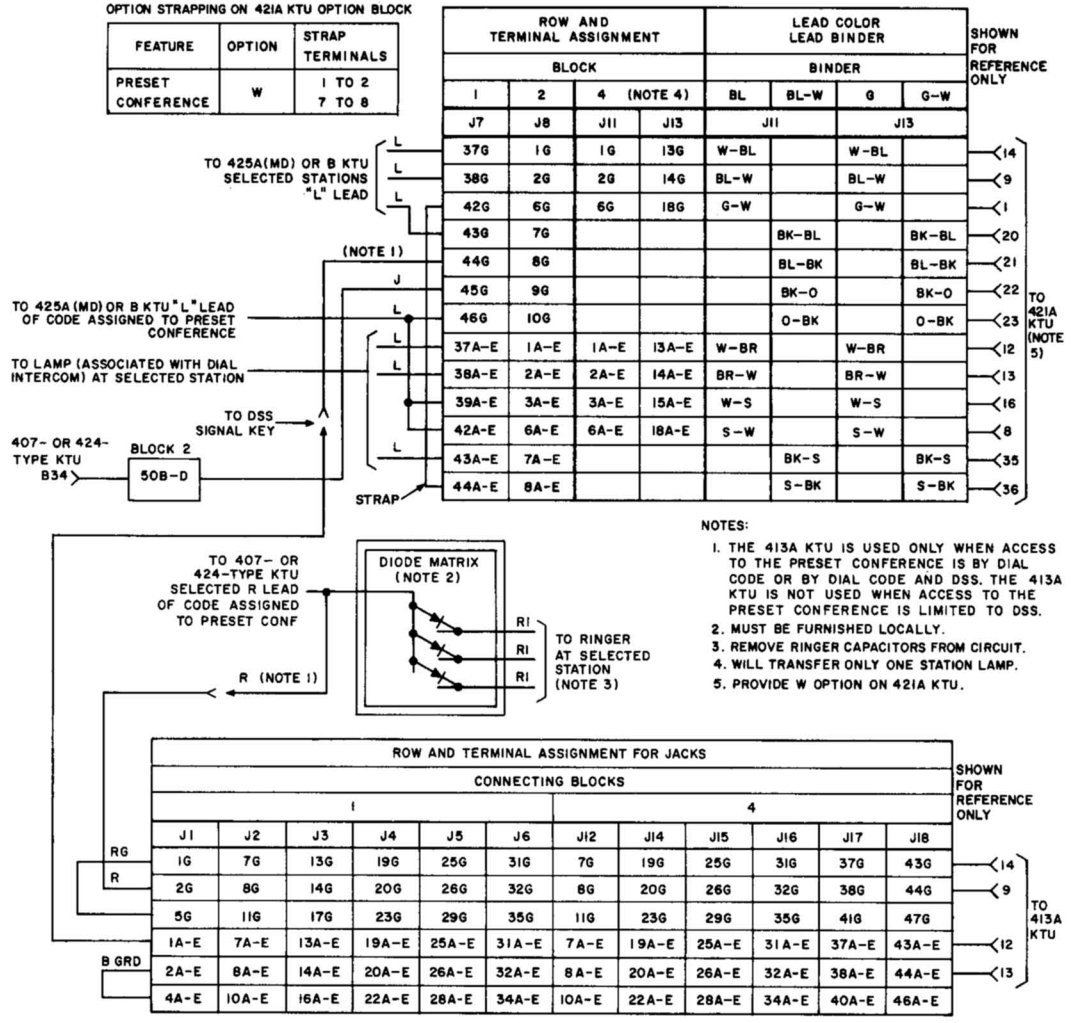

Fig. 24—Connections for 421A KTU (Preset Conference Circuit) for Dial Intercom Line

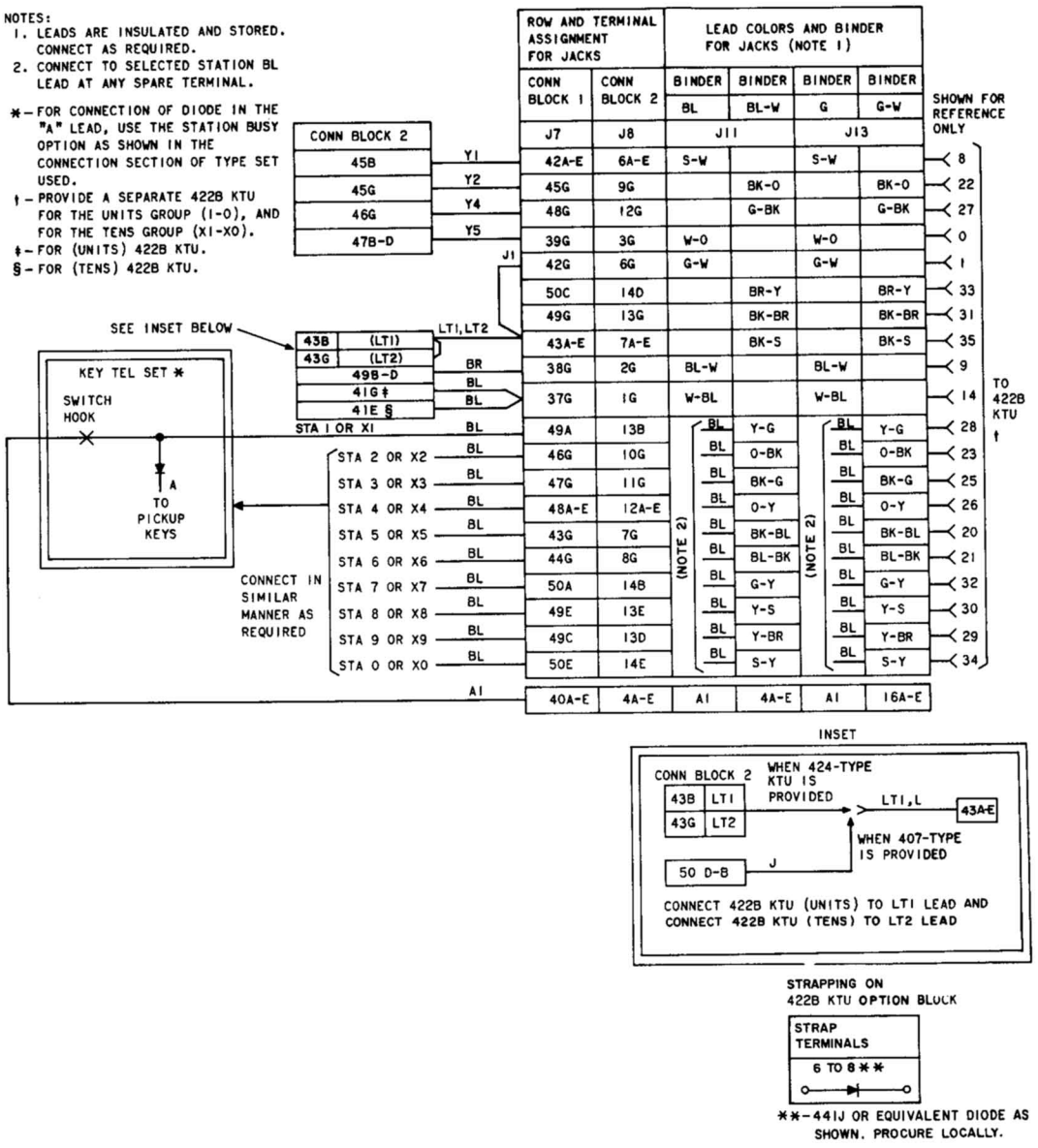

Fig. 25—Connections for 422B KTU (Dial Intercom, Station Busy Selector Circuit)

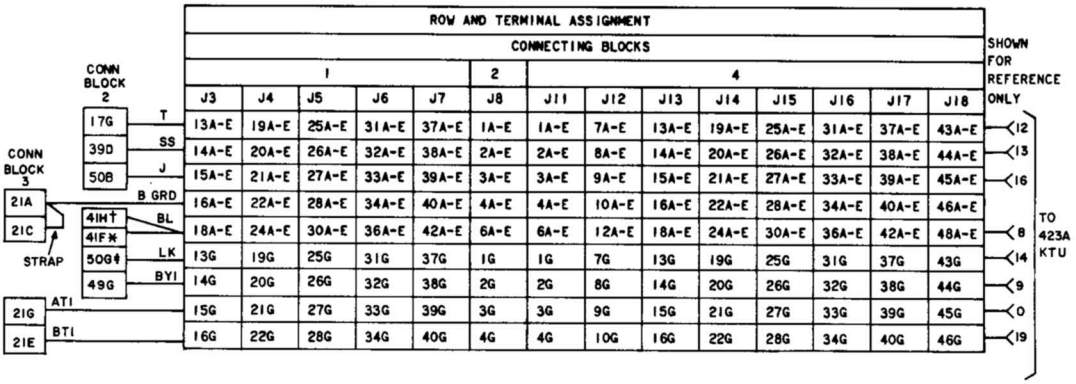

* TO TENS 422A (MD) OR B KTU
† TO UNITS 422A(MD) OR B KTU
‡ WHEN ADDING THE 423A KTU TO A SYSTEM EQUIPPED FOR "TOUCH-TONE" (426A AND 427B [SERIES 4] OR C KTUS). A 400J DIODE MUST BE INSTALLED BETWEEN THE "RH" AND "LK" LEADS OF THE 407- OR 424-TYPE KTU. REWIRE AS FOLLOWS:

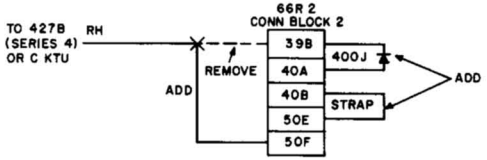

IF THE SYSTEM IS EQUIPPED WITH DSS (421A KTU) REWIRE "RH" LEADS BY TERMINATING ONE LEAD TO TERMINAL 50F AND THE OTHER LEAD TO A 183A2 ADAPTER INSTALLED OVER TERMINAL 50G AND 50H.

OPTION STRAPPING ON 423A KTU OPTION BLOCK

OPTION	FEATURES	STRAP TERMINALS
T	DIAL TONE	1 TO 2
R	STATION BUSY TONE	4 TO 6
S	AUDIBLE RINGBACK	§

§ REQUIRES NO STRAPPING ON KTU

Fig. 26—Connections for 423A KTU (Dial Intercom, Audible Ringback, Dial and Busy Tone Circuit)

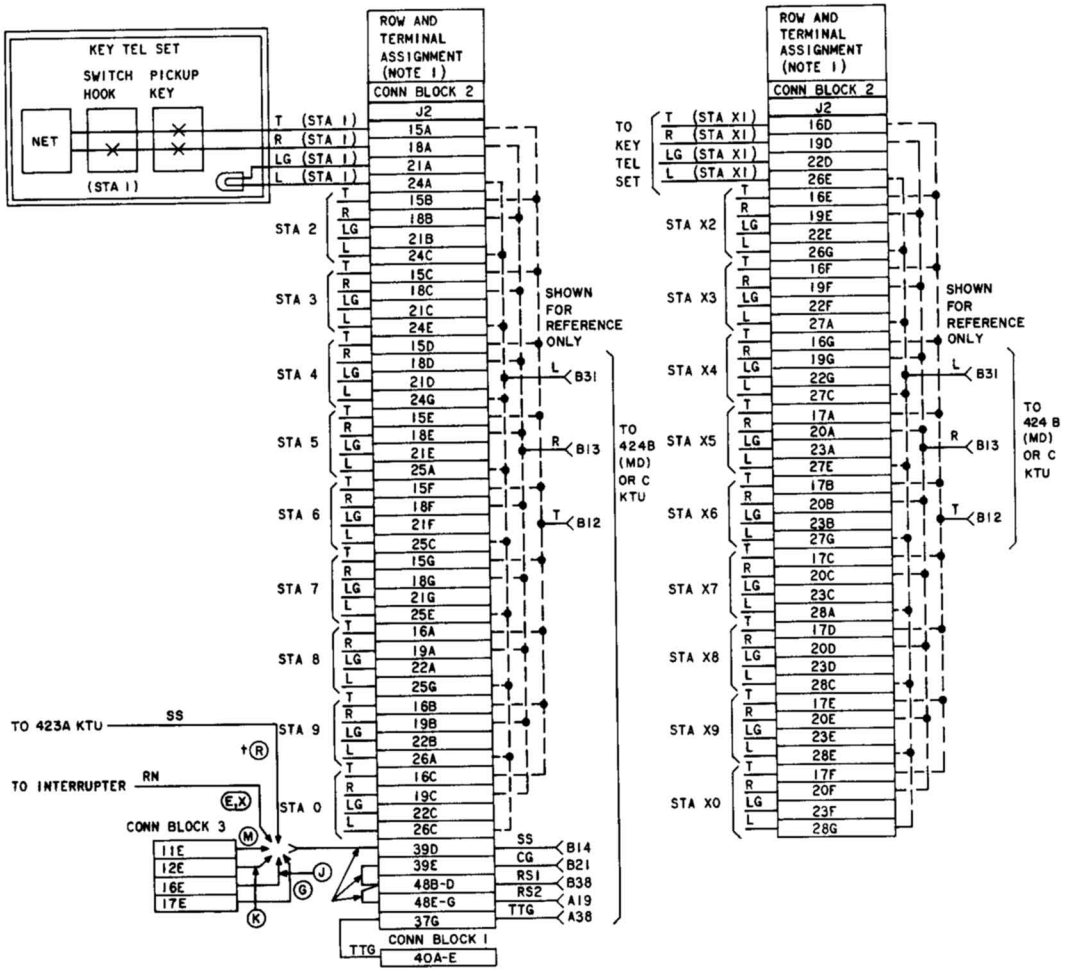

NOTES:

1. CONNECTIONS SHOWN ARE ONLY FOR THE BASIC FEATURES OF THE 424B(MD) OR C KTU, I.E., ROTARY DIAL STATIONS. SINGLE SPURT RINGING, AND STEADY LINE AND BUSY LAMPS. WHEN ADDING OPTIONAL FEATURES SUCH AS FLASHING LINE LAMPS, "TOUCH-TONE" STATIONS, DIAL TONE, ETC, PROVIDE THESE CONNECTIONS, AND THEN REFER TO THE CONNECTION FIGURE OF THE KTU PROVIDING THE OPTIONAL FEATURES BEING ADDED.
2. ANY SELECTED R LEAD (R1-R0) MAY BE ASSIGNED AS THE INITIAL DIGIT OF A 2-DIGIT CODE. THE R LEAD SO ASSIGNED MAY NOT BE USED FOR A STATION CODE.

OPTIONS:

E	INTERRUPTED	10V AC BUZZER	AUDIBLE SIGNALS
X	*	105V 30 HZ RINGER	
G	SINGLE SPURT †	10V AC BUZZER	
J		18V AC BUZZER	
K		DC BUZZER	
M		105V 30 HZ BUZZER	

* TO PROVIDE INTERRUPTED RINGING A 425B KTU MUST BE USED.

† STATION BUSY TONE (R) IS NOT RECOMMENDED FOR USE WITH SINGLE SPURT RINGING.

Fig. 27—Connections for 424B (MD) or 424C KTU (Dial Intercom, 19-Code Selector Circuit) (Sheet 1 of 2)

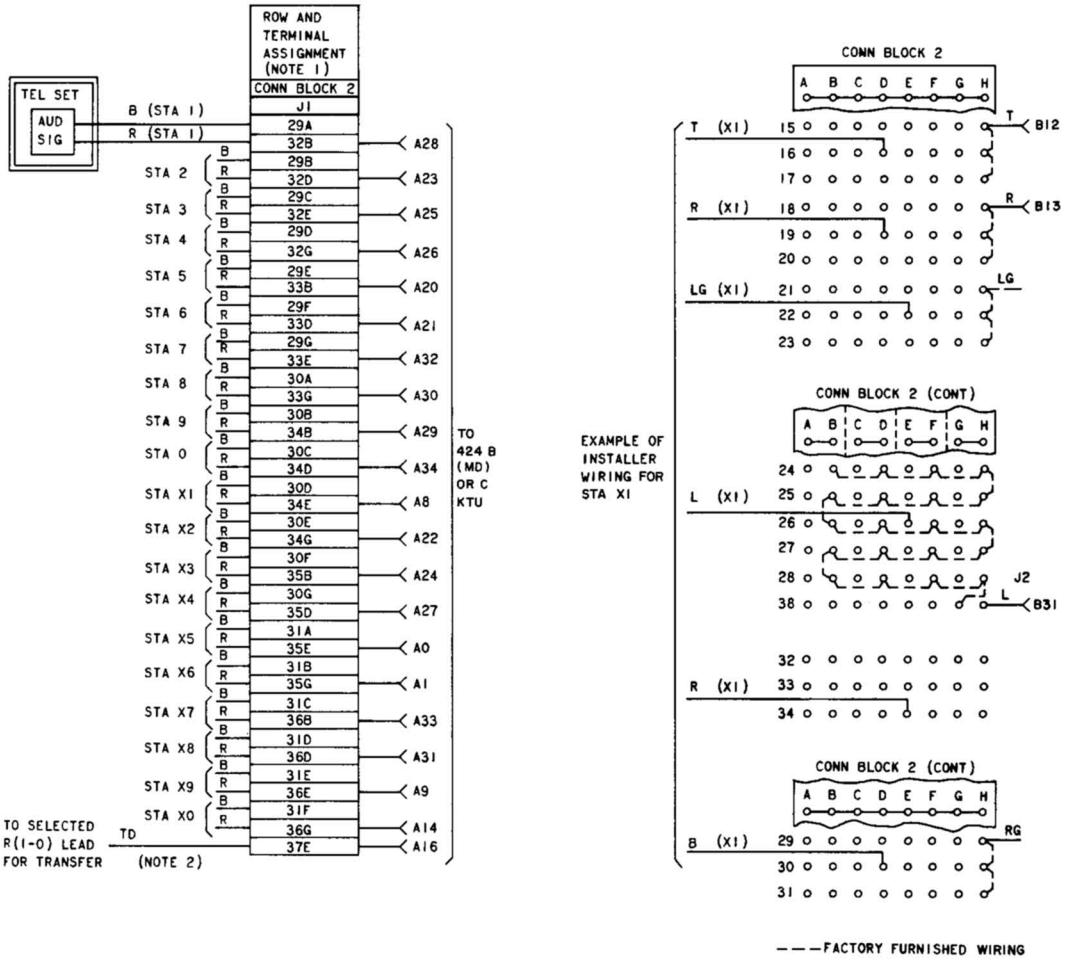

Fig. 27—Connections for 424B (MD) or 424C KTU (Dial Intercom, 19-Code Selector Circuit) (Sheet 2 of 2)

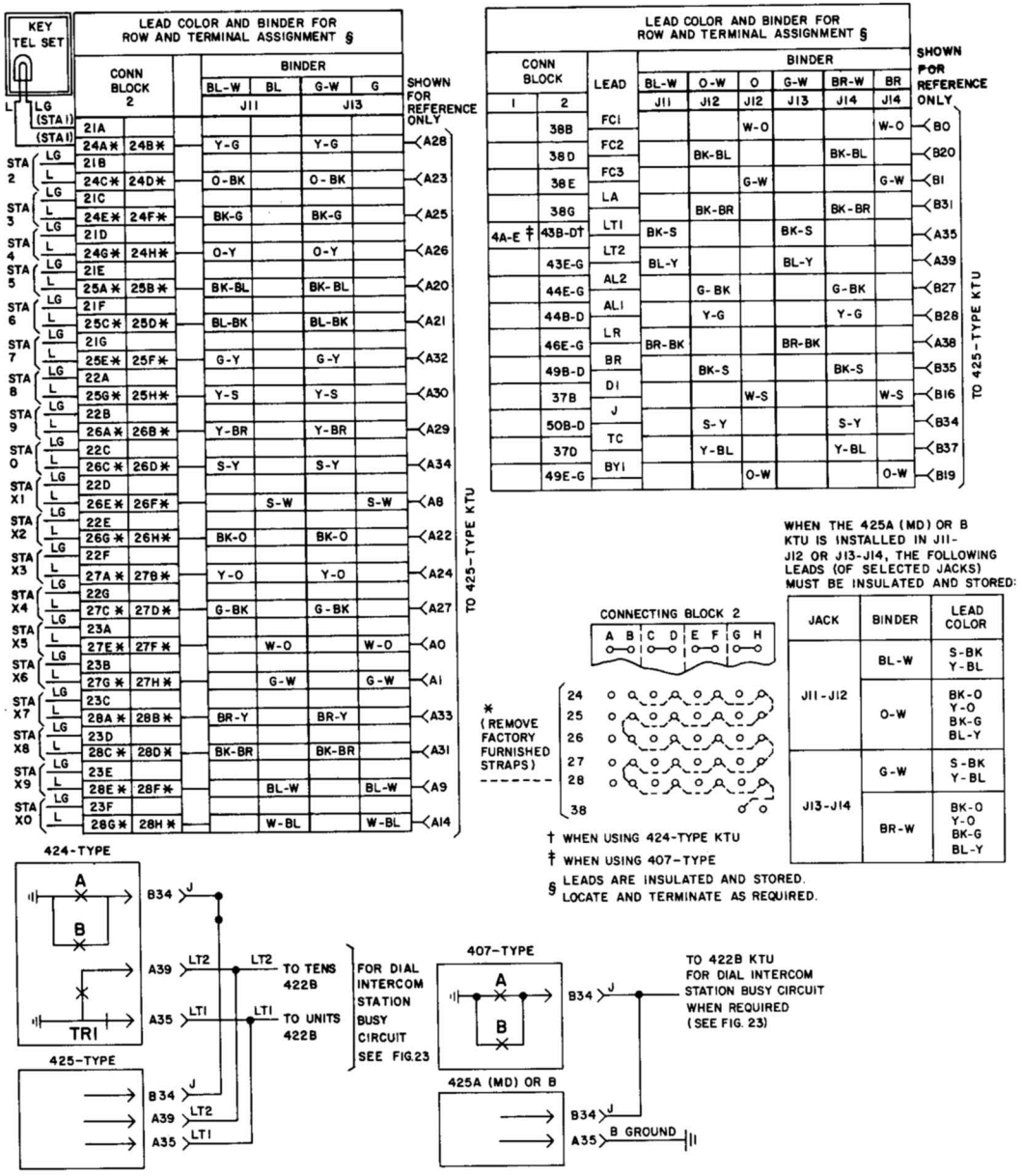

Fig. 28—Connections for 425A (MD) or 425B KTU (Dial Intercom, Flashing Lamp Circuit)

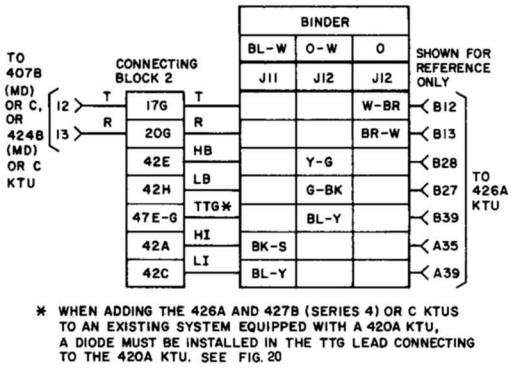

* WHEN ADDING THE 426A AND 427B (SERIES 4) OR C KTUS TO AN EXISTING SYSTEM EQUIPPED WITH A 420A KTU, A DIODE MUST BE INSTALLED IN THE TTG LEAD CONNECTING TO THE 420A KTU. SEE FIG. 20

Fig. 29—Connections for 426A KTU (Part of TOUCH-TONE Adapter Circuit)

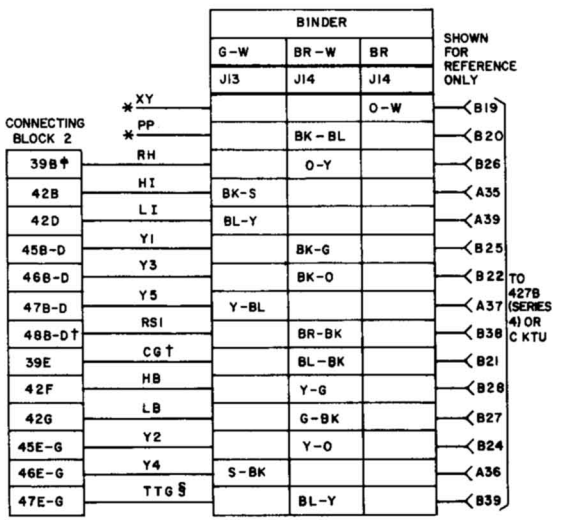

* CONNECT AS REQUIRED WHEN THE 11TH KEY (XY) OR 12TH KEY (PP) IS USED.

† REMOVE STRAP BETWEEN 39E AND 48B CONNECTING BLOCK 2, IF PROVIDED.

‡ WHEN A 423A KTU IS ADDED, THE RH LEAD SHOULD BE REMOVED FROM 39B AND CONNECTED TO 50F. A 400J DIODE MUST BE INSTALLED BETWEEN 39B AND 50E. REFER TO FIG. 26 .

§ WHEN ADDING THE 426A AND 427B (SERIES 4) OR C KTUS TO AN EXISTING SYSTEM EQUIPPED WITH A 420A KTU, A DIODE MUST BE INSTALLED IN THE TTG LEAD CONNECTING TO THE 420A KTU. SEE FIG. 20.

Fig. 30—Connections for 427B (Series 4) or C KTU (Part of TOUCH-TONE Adapter Circuit)

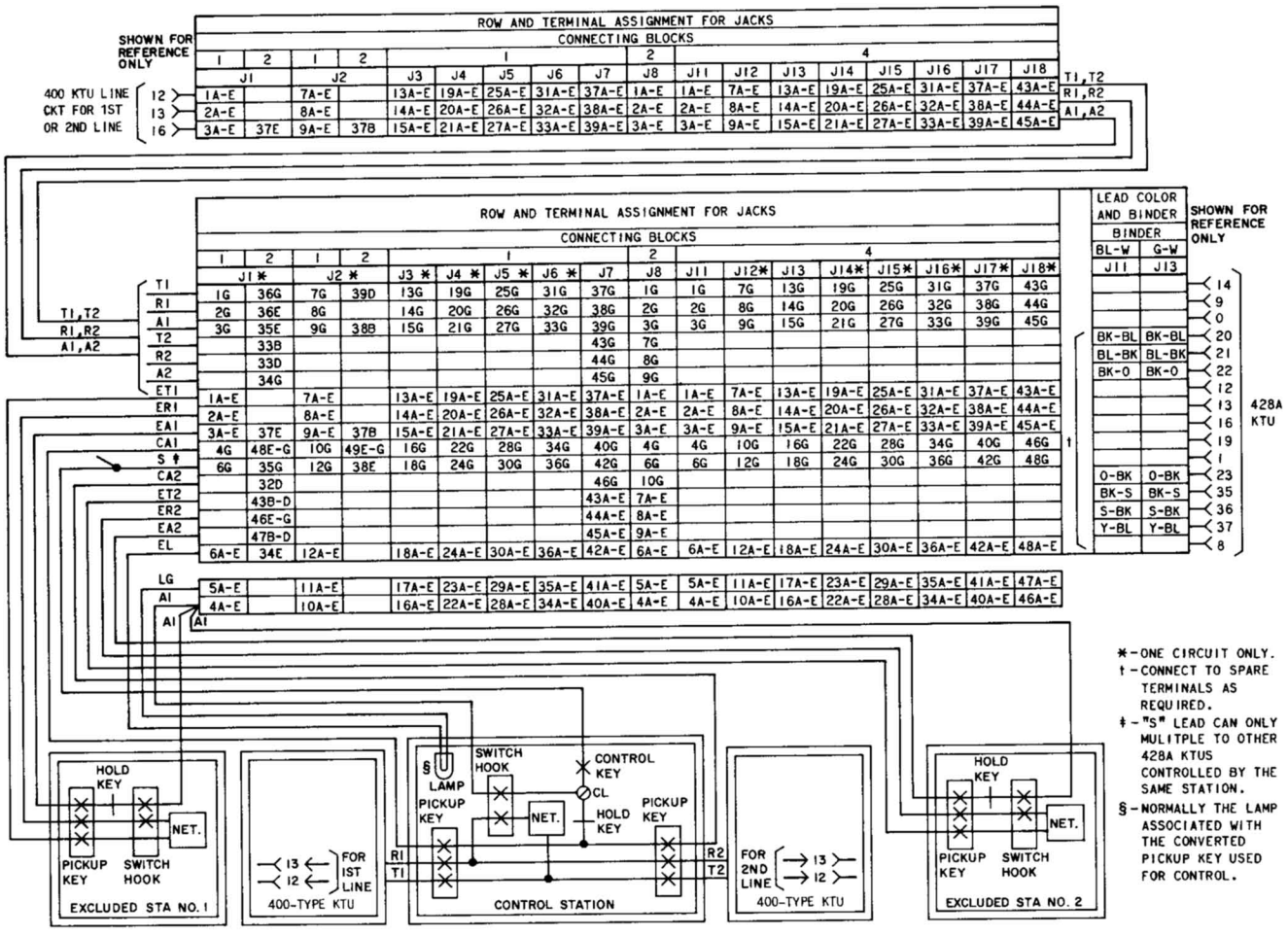

Fig. 31—Connections for 428A KTU (Multiline Exclusion Circuit)

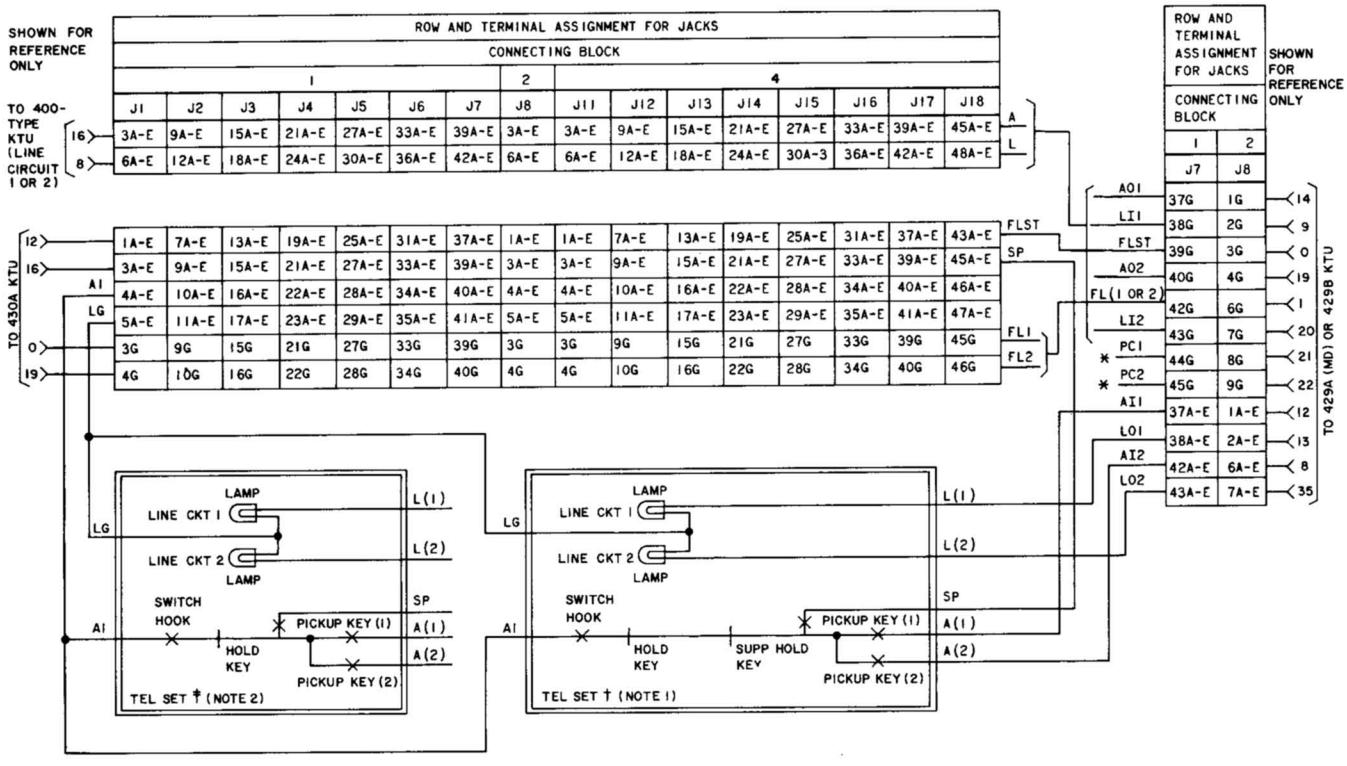

NOTES:

1. FOR PRIORITY HOLD, THE A AND L LEADS FROM EACH TEL SET CONNECT THROUGH THE 429A (MD) OR 429B KTU TO THE 400-TYPE KTU.
2. FOR I HOLD, THE A AND L LEADS FROM THE TEL SET SELECTED FOR I HOLD CONNECT THROUGH THE 429A (MD) OR 429B KTU TO THE 400-TYPE KTU. THE A AND L LEADS FROM THE OTHER TEL SETS CONNECT DIRECTLY TO THE 400-TYPE KTU.
3. THE 429A (MD) OR 429B KTU WILL PROVIDE SUPPLEMENTARY HOLD FOR TWO CO OR PBX LINE CIRCUITS. EACH HOLD CIRCUIT MAY BE ASSIGNED AS PRIORITY OR I HOLD.
4. LIMITATIONS OF THE 430A KTU ARE AS FOLLOWS:
   A. FL1 OR FL2 LEAD CAN SERVE A MAXIMUM OF 50 LAMPS.
   B. SP LEAD CAN CONNECT TO A MAXIMUM OF 20 STATIONS.

* TO MESSAGE REGISTER IF PROVIDED
† WIRED FOR PRIORITY HOLD
‡ WIRED FOR I HOLD

Fig. 32—Connections for 429A (MD) or 429B KTU and 430A KTU (Supplementary Hold Detector and Flutter Generator Circuit)

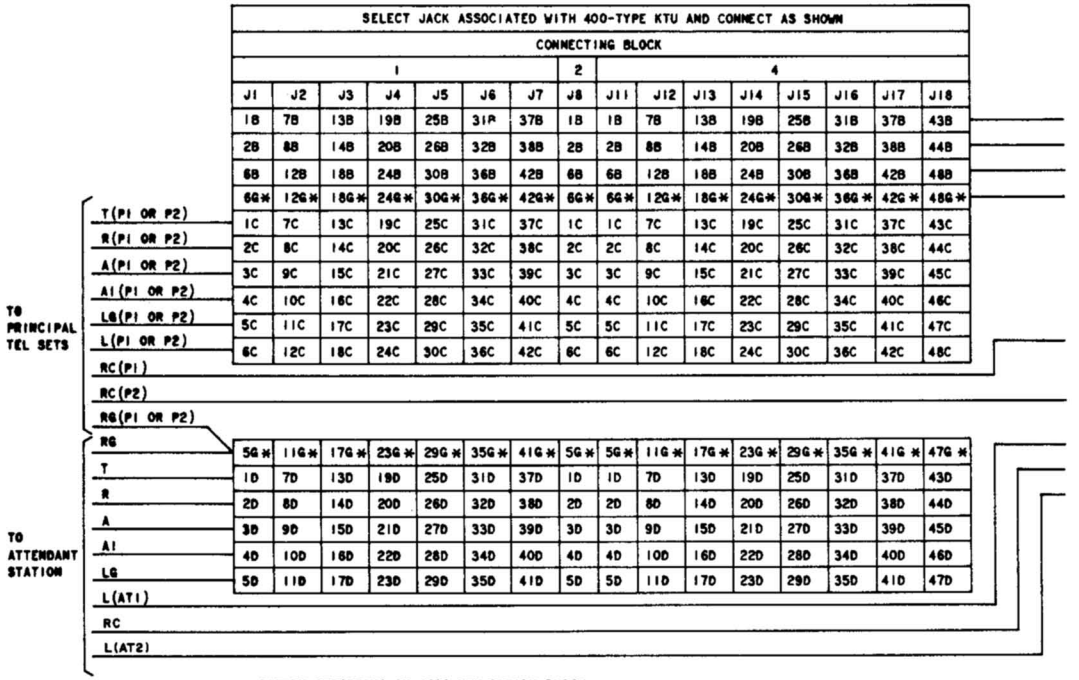

OPTION STRAPPING ON 448A KTU OPTION BLOCK

	OPTION	FEATURE	STRAP TERMINALS	
			1ST CKT	2ND CKT
AUDIBLE SIGNALS	W	INTERRUPTED RING	8 TO 7§	3 TO 5§
	T	STEADY RING	8 TO 6	3 TO 4
	X	STEADY BUZZER	8 TO 10	3 TO 1

§ FACTORY PROVIDED

NOTES:
1. 448A KTU CONTAINS TWO CIRCUITS.
2. PLACE STRAP ON 400-TYPE KTUS AS FOLLOWS:
   - 400B AND C - STRAP TERMINAL 3 TO 6
   - 400D - STRAP TERMINAL 4 TO 8
   - 400G - CONNECT TERMINAL C1 TO C3
3. TO 400-TYPE KTU ASSOCIATED WITH FIRST CIRCUIT OF 448A KTU.
4. TO 400-TYPE KTU ASSOCIATED WITH SECOND CIRCUIT OF 448A KTU.

* USE 183A2 ADAPTER TO MULTIPLE LEADS

† TO 449A KTU OR TURN KEY IF IMMEDIATE RINGER TRANSFER REQUIRED

‡ TO FIRST AND SECOND PRINCIPAL TEL SETS IF COMMON AUDIBLE IS TO BE USED AND RINGER IS NOT TO BE CUT OFF.

Fig. 33—Connections for 448A KTU (Variable Delay Timer Circuit) (Sheet 1 of 2)

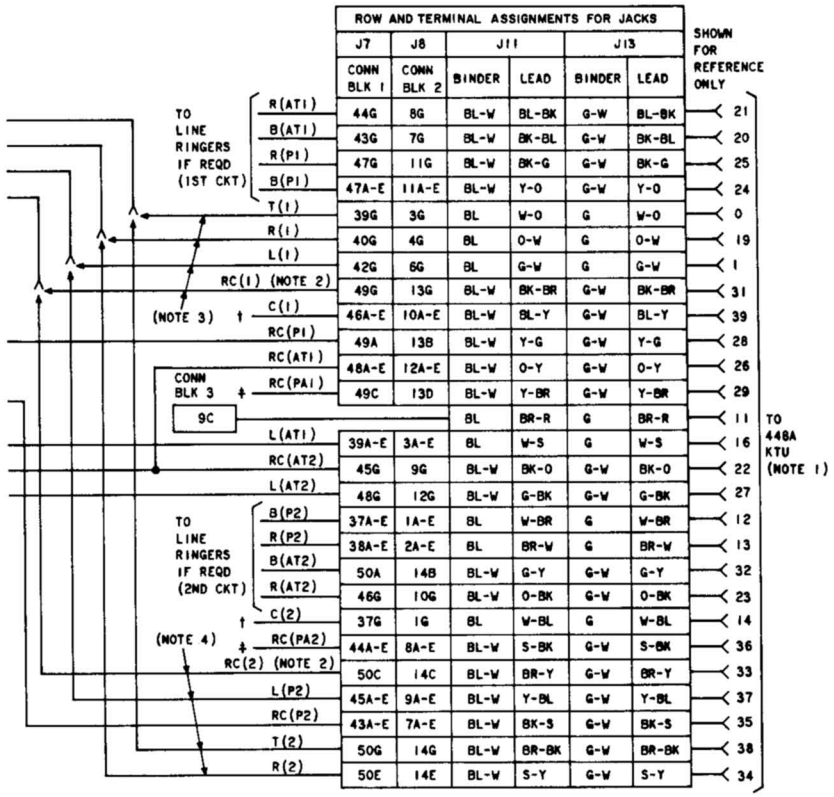

Fig. 33—Connections for 448A KTU (Variable Delay Timer Circuit) (Sheet 2 of 2)

SELECT JACK ASSOCIATED WITH 400-TYPE KTU AND CONNECT AS SHOWN															
CONNECTING BLOCK															
1							2	4							
J1	J2	J3	J4	J5	J6	J7	J8	J11	J12	J13	J14	J15	J16	J17	J18	
1B	7B	13B	19B	25B	31B	37B	1B	1B	7B	13B	19B	25B	31B	37B	43B	T*
2B	8B	14B	20B	26B	32B	38B	2B	2B	8B	14B	20B	26B	32B	38B	44B	R*
5G†	11G†	17G†	23G†	29G†	35G†	41G†	5G†	5G†	11G†	17G†	23G†	29G†	35G†	41G†	47G†	RG†
6B	12B	18B	24B	30B	36B	42B	6B	6B	12B	18B	24B	30B	36B	42B	48B	L(1)
6G†	12G†	18G†	24G†	30G†	36G†	42G†	6G†	6G†	12G†	18G†	24G†	30G†	36G†	42G†	48G†	RC† (NOTE 5)

R* OR RC†(P1)

B* OR RG†(P1)

TO PRINCIPAL TEL SETS

T	1C	7C	13C	19C	25C	31C	37C	1C	1C	7C	13C	19C	25C	31C	37C	43C
R	2C	8C	14C	20C	26C	32C	38C	2C	2C	8C	14C	20C	26C	32C	38C	44C
A	3C	9C	15C	21C	27C	33C	39C	3C	3C	9C	15C	21C	27C	33C	39C	45C
A1	4C	10C	16C	22C	28C	34C	40C	4C	4C	10C	16C	22C	28C	34C	40C	46C
LG	5C	11C	17C	23C	29C	35C	41C	5C	5C	11C	17C	23C	29C	35C	41C	47C
L(1)	6C	12C	18C	24C	30C	36C	42C	6C	6C	12C	18C	24C	30C	36C	42C	48C
SG(P1 AND P2)	4D	10D	16D	22D	28D	34D	40D	4D	4D	10D	16D	22D	28D	34D	40D	46D
S(P1)																
LG(P1 AND P2)	5D	11D	17D	23D	29D	35D	41D	5D	5D	11D	17D	23D	29D	35D	41D	47D
L(P1)																
B* OR RG†(P2)																
B* OR RC†(P2)																
L(P2)																
S(P2)																

TO ATTENDANT STATION

T	1D	7D	13D	19D	25D	31D	37D	1D	1D	7D	13D	19D	25D	31D	37D	43D
R	2D	8D	14D	20D	26D	32D	38D	2D	2D	8D	14D	20D	26D	32D	38D	44D
A	3D	9D	15D	21D	27D	33D	39D	3D	3D	9D	15D	21D	27D	33D	39D	45D
A1	4D	10D	16D	22D	28D	34D	40D	4D	4D	10D	16D	22D	28D	34D	40D	46D
LG	5E	11E	17E	23E	29E	35E	41E	5E	5E	11E	17E	23E	29E	35E	41E	47E
R* OR RC†																
R* OR RG†																
L(AT1)																
L(AT2)																

NOTES:
1. 449A KTU CONTAINS TWO CIRCUITS.
2. CONNECT B GRD ONLY IF 448A KTU IS PROVIDED. IF 448A KTU IS PROVIDED, NONE OF THE RINGER CONNECTIONS ARE REQUIRED.
3. TO 400-TYPE KTU ASSOCIATED WITH FIRST CIRCUIT OF 449A KTU.
4. TO 400-TYPE KTU ASSOCIATED WITH SECOND CIRCUIT OF 449A KTU.
5. PLACE STRAP ON 400-TYPE KTU AS FOLLOWS:
   - 400B AND C - STRAP TERMINAL 4 TO 6
   - 400D - STRAP TERMINAL 6 TO 8
   - 400G - CONNECT TERMINALS C3 TO C4

FOR LINE RINGING
† FOR COMMON AUDIBLE RINGING
‡ USE 183A2 ADAPTER TO MULTIPLE LEADS

Fig. 34—Connections for 449A KTU (Immediate Transfer Control Circuit) (Sheet 1 of 2)

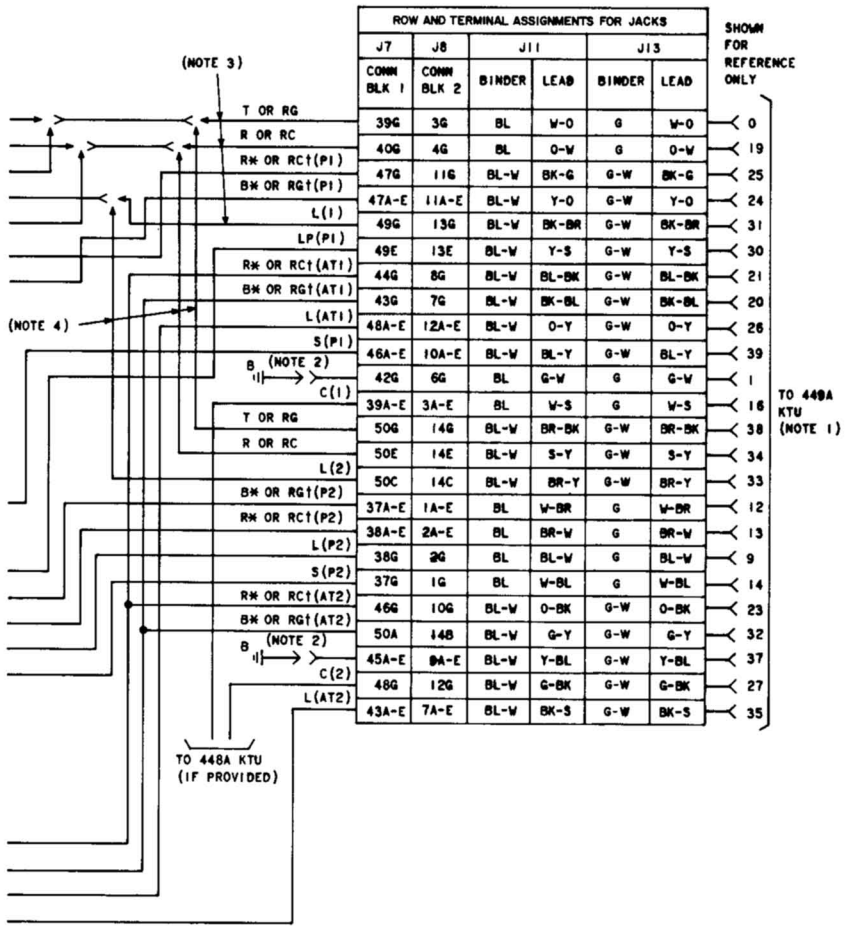

Fig. 34—Connections for 449A KTU (Immediate Transfer Control Circuit) (Sheet 2 of 2)

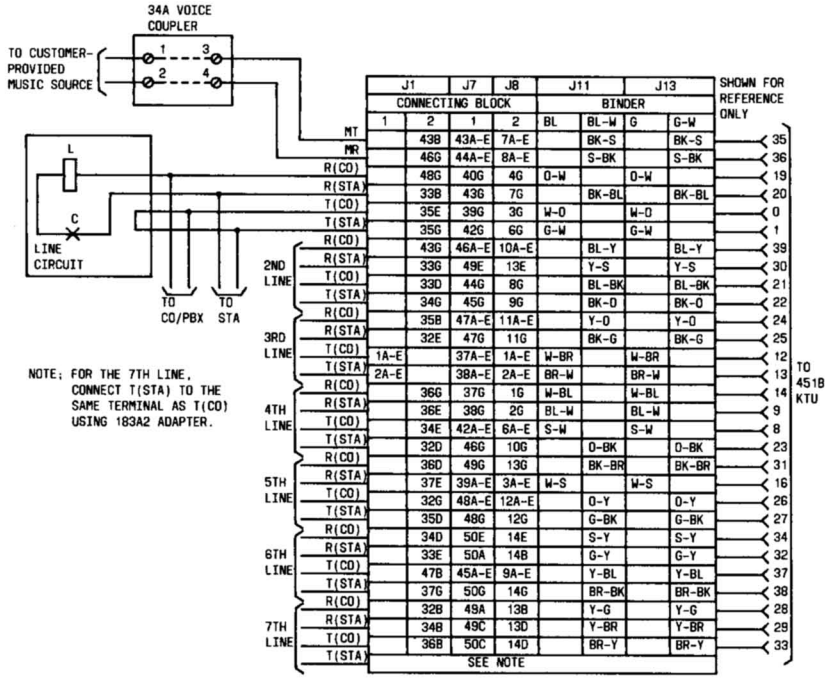

J1		J7	J8	J11		J13		
1	2	1	2	BL	BL-W	G	G-W	
	43B	43A-E	7A-E		BK-S		BK-S	35
	46G	44A-E	8A-E		S-BK		S-BK	36
	48G	40G	4G	O-W		O-W		19
	33B	43G	7G		BK-BL		BK-BL	20
	35E	39G	3G	W-O		W-O		0
	35G	42G	6G	G-W		G-W		1
	43G	46A-E	10A-E		BL-Y		BL-Y	39
	33G	49E	13E		Y-S		Y-S	30
	33D	44G	8G		BL-BK		BL-BK	21
	34G	45G	9G		BK-O		BK-O	22
	35B	47A-E	11A-E		Y-O		Y-O	24
	32E	47G	11G		BK-G		BK-G	25
1A-E		37A-E	1A-E	W-BR		W-BR		12
2A-E		38A-E	2A-E	BR-W		BR-W		13
	36G	37G	1G	W-BL		W-BL		14
	38E	38G	2G	BL-W		BL-W		9
	34E	42A-E	6A-E	S-W		S-W		8
	32D	46G	10G		O-BK		O-BK	23
	36D	49G	13G		BK-BR		BK-BR	31
	37E	39A-E	3A-E	W-S		W-S		16
	32G	48A-E	12A-E		O-Y		O-Y	26
	35D	48G	12G		G-BK		G-BK	27
	34D	50E	14E		S-Y		S-Y	34
	33E	50A	14B		G-Y		G-Y	32
	47B	45A-E	9A-E		Y-BL		Y-BL	37
	37G	50G	14G		BR-BK		BR-BK	38
	32B	49A	13B		Y-G		Y-G	28
	34B	49C	13D		Y-BR		Y-BR	29
	36B	50C	14D		BR-Y		BR-Y	33

Fig. 35— ◗Connections for 451B KTU (Music-On-Hold)◖

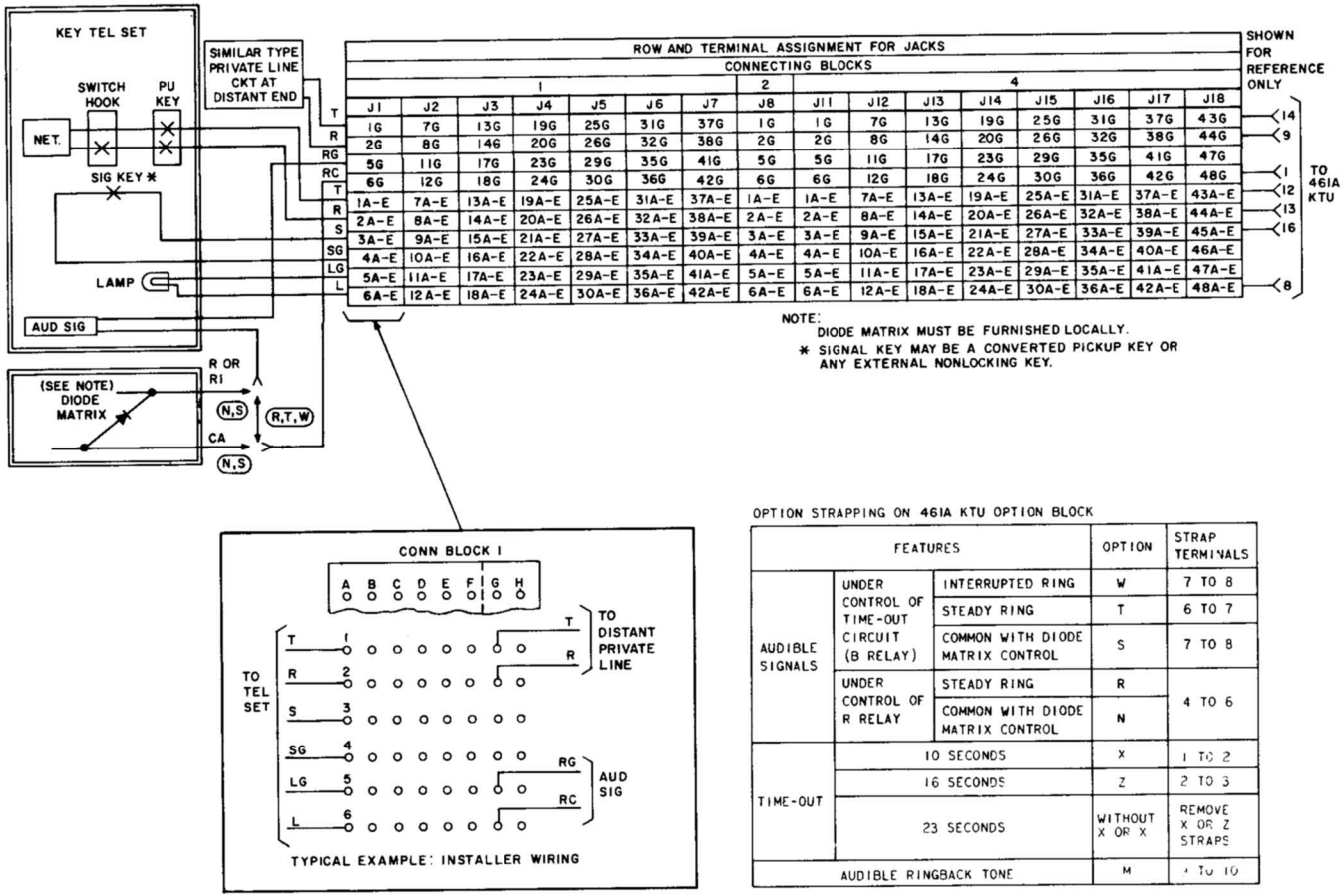

OPTION STRAPPING ON 461A KTU OPTION BLOCK

FEATURES			OPTION	STRAP TERMINALS
AUDIBLE SIGNALS	UNDER CONTROL OF TIME-OUT CIRCUIT (B RELAY)	INTERRUPTED RING	W	7 TO 8
		STEADY RING	T	6 TO 7
		COMMON WITH DIODE MATRIX CONTROL	S	7 TO 8
	UNDER CONTROL OF R RELAY	STEADY RING	R	4 TO 6
		COMMON WITH DIODE MATRIX CONTROL	N	
TIME-OUT	10 SECONDS		X	1 TO 2
	16 SECONDS		Z	2 TO 3
	23 SECONDS		WITHOUT X OR X	REMOVE X OR Z STRAPS
AUDIBLE RINGBACK TONE			M	4 TO 10

Fig. 36—Connections for 461A KTU (Manual Signaling, Ringdown Private Line Circuit)

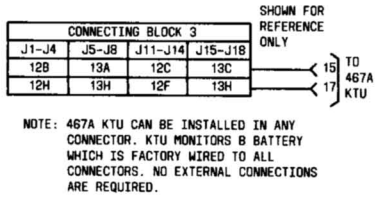

Fig. 37—Connections for 467A KTU (Low-Voltage Monitor Circuit)

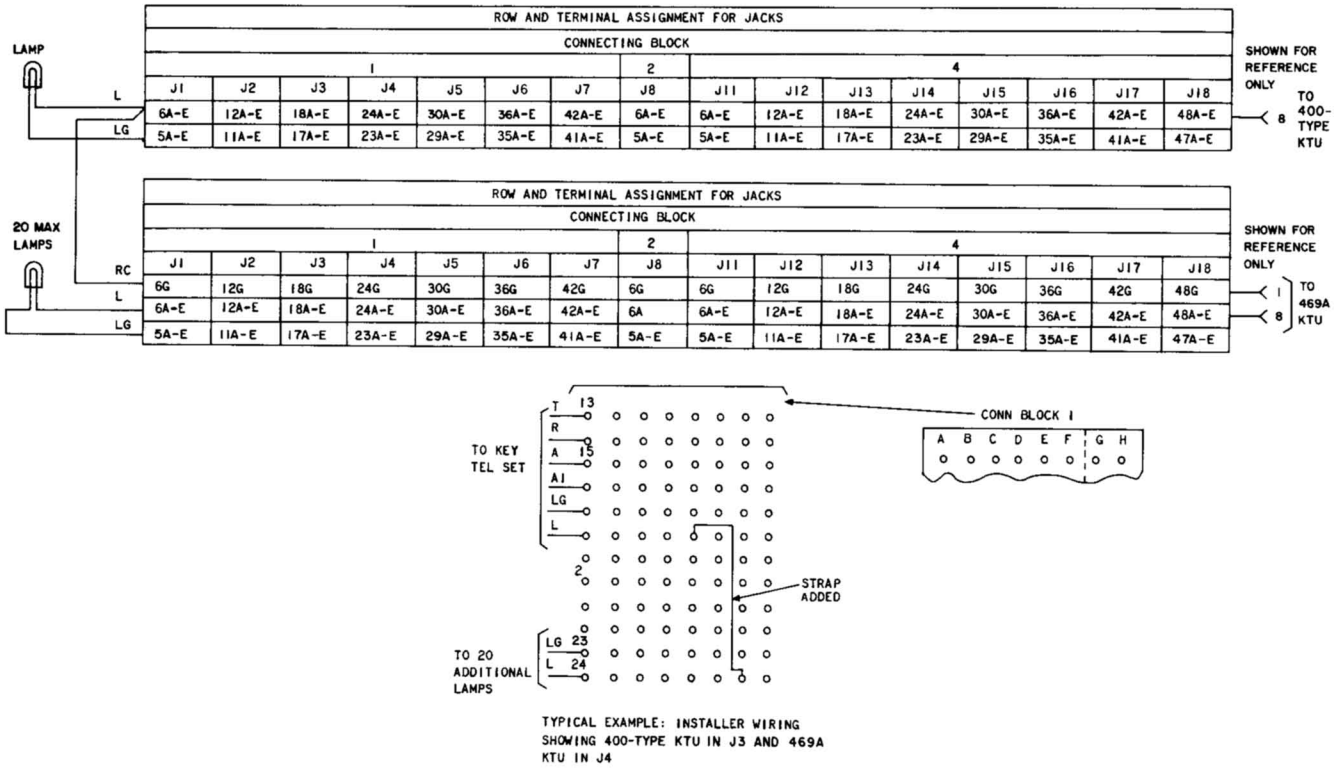

TYPICAL EXAMPLE: INSTALLER WIRING SHOWING 400-TYPE KTU IN J3 AND 469A KTU IN J4

Fig. 38—Connections for 469A KTU (Lamp Extender Circuit)

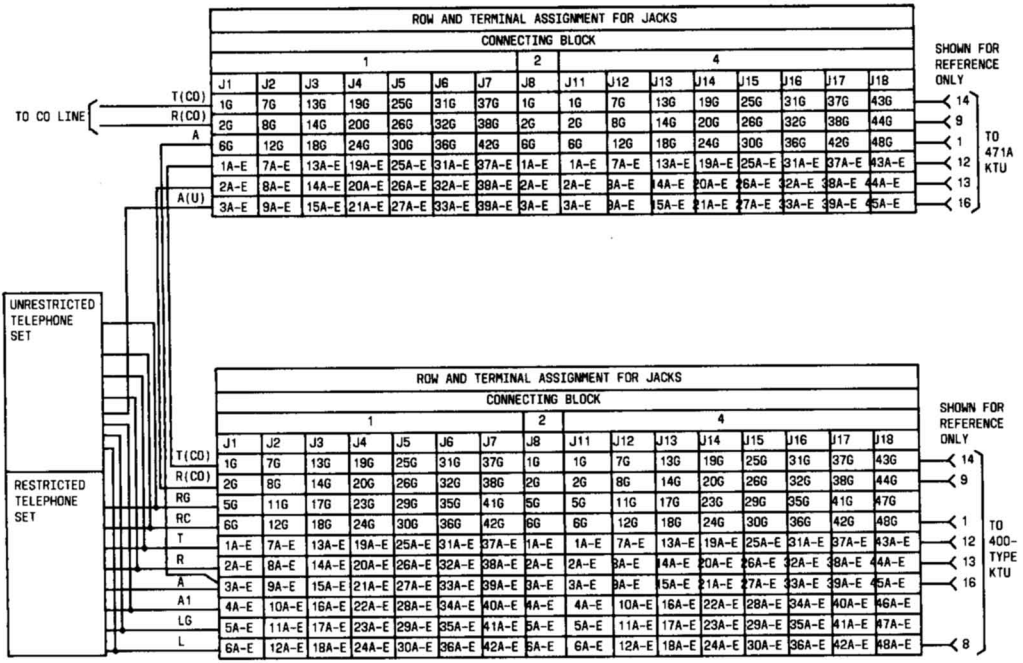

Fig. 39—Connections for 471-Type KTU (Battery Reversal Toll Restriction Circuit)

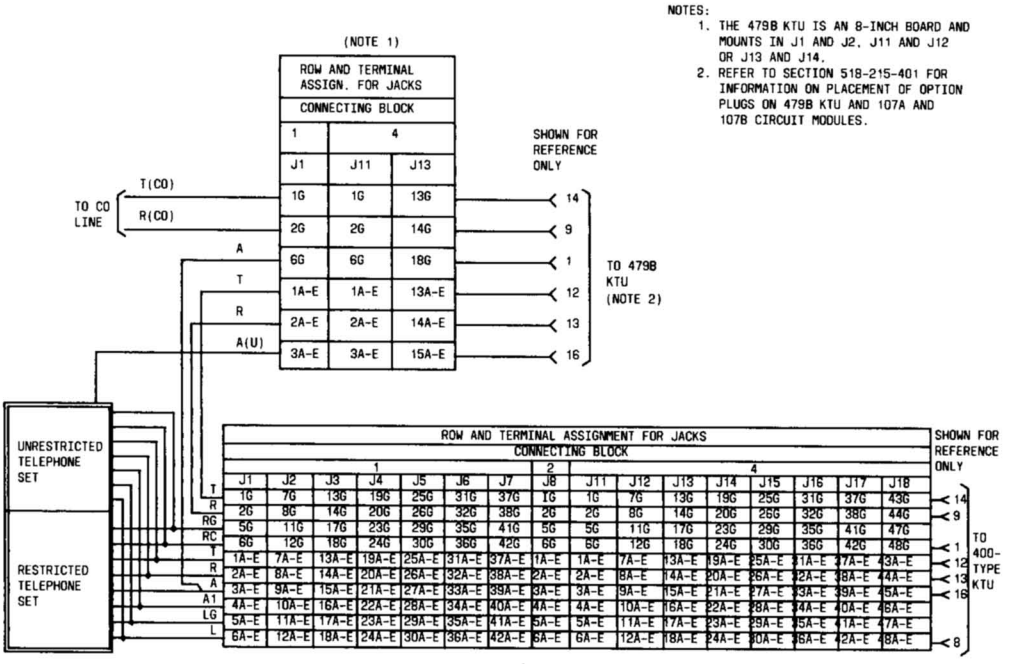

Fig. 40—Connections for 479B KTU (Rotary Dial Toll Restriction Circuit)

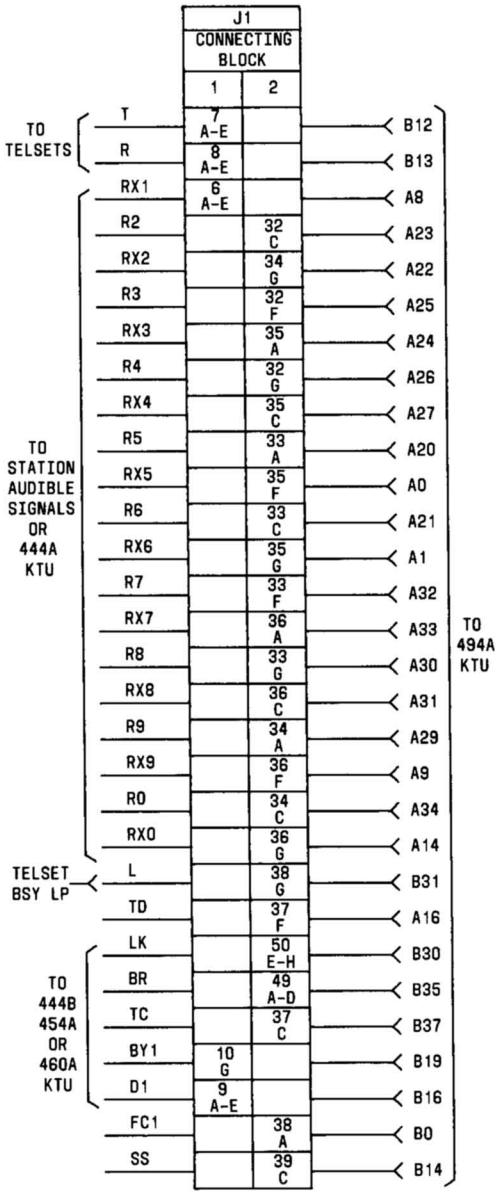

Fig. 41—Connections for 494A KTU (TOUCH-TONE Selection Circuit)

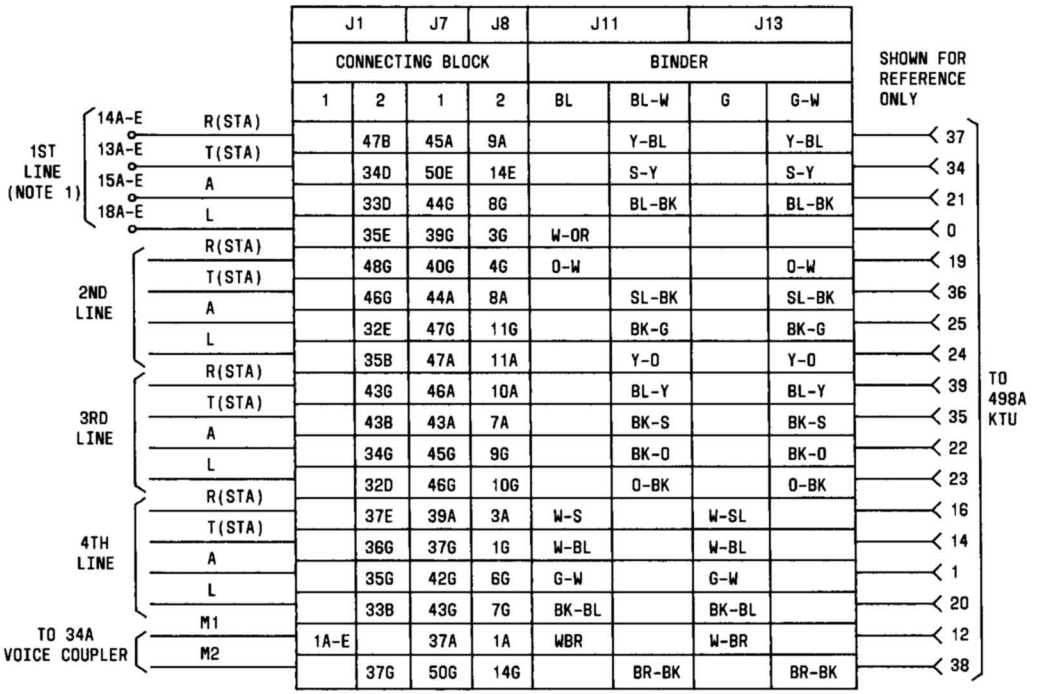

NOTES:

1. TERMINATIONS SHOWN ARE FOR 400H IN JK3, SHOWN AS EXAMPLE ONLY
2. THIS KTU SHOULD BE USED FOR 4 CIRCUITS ONLY. THE 116A1 CIRCUIT MODULE MUST NOT BE ADDED BECAUSE OF WIRING INCOMPATIBILITY.

Fig. 42—Connections for 498A KTU (Music-On-Hold)

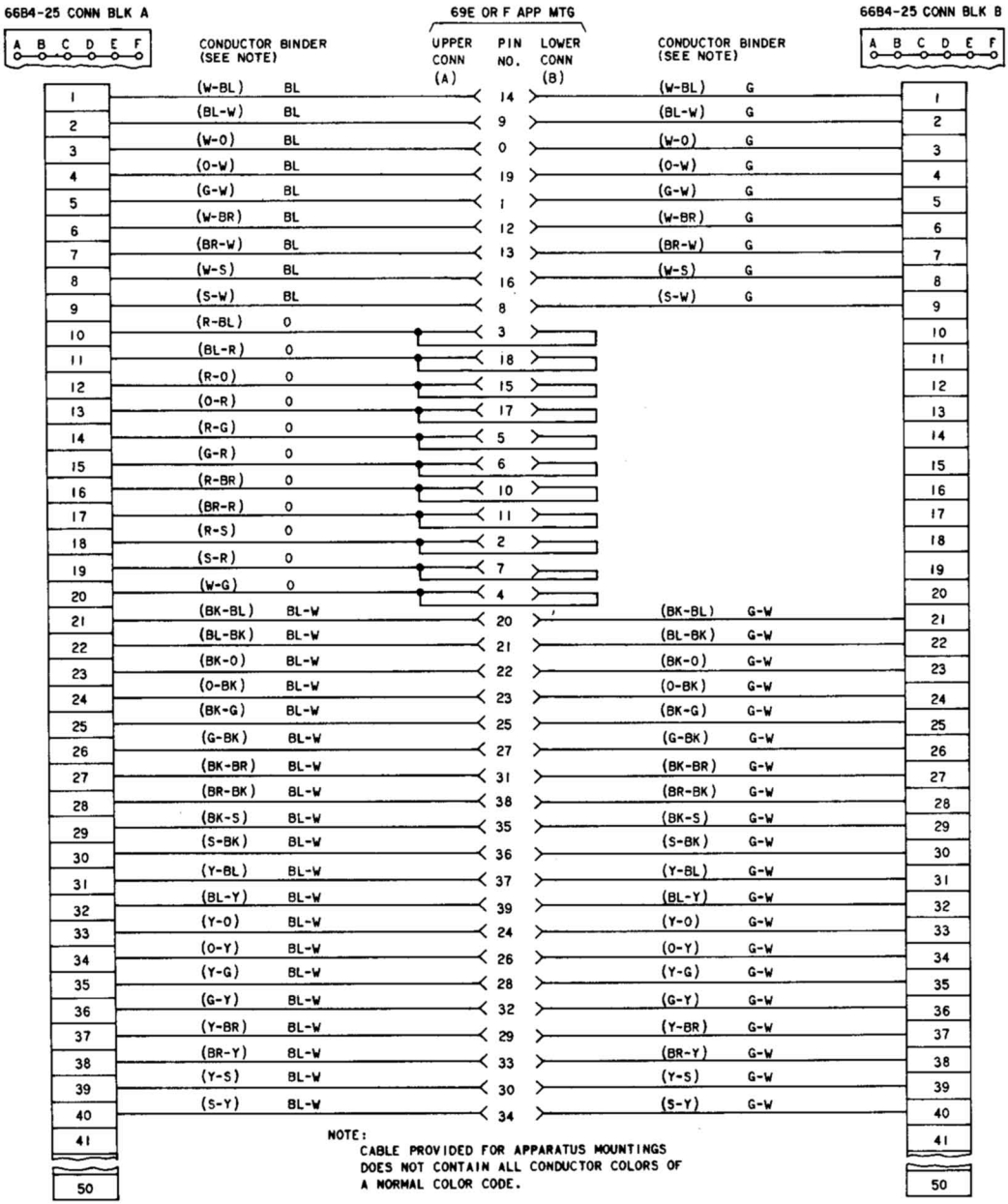

Fig. 43—Connections From 69E or 69F apparatus Mounting to External Connecting Blocks

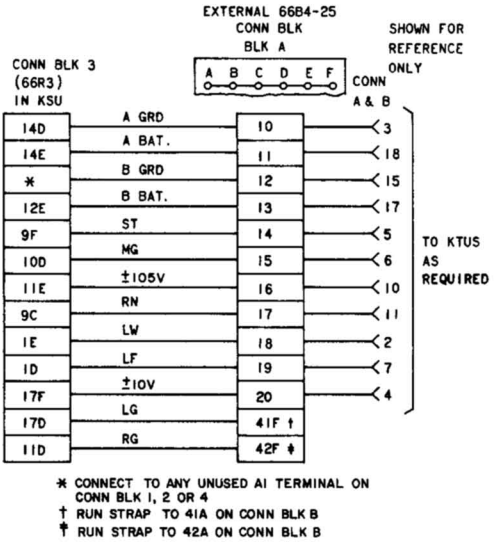

Fig. 44—Power Supply Connections for 69E or F Apparatus Mounting

NOTES:

1. THE 400D KTU IS FACTORY WIRED FOR 10-SECOND TIME-OUT AND 7-SECOND TIMEOUT RESPECTIVELY PLUS WINDING-HOLD LAMP, AND W AND S WIRING OPTIONS.
2. DIODE MATRIX MUST BE FURNISHED LOCALLY.
3. FOR 30 SECOND TIME-OUT CYCLE, REMOVE Z OPTION STRAP BETWEEN TERMINALS 1 AND 2.
4. TO PROVIDE TIME-OUT CYCLES OF RING-UP CIRCUITS FROM 3.4 TO 7.5 SECONDS REPLACE Z OPTION STRAP WITH A KS-13490,L1 OR EQUIVALENT (1 WATT) RESISTOR. USE ONE RESISTOR LEAD AS A STRAP BETWEEN TERMINALS 1 AND 2 AND CONNECT THE OTHER LEAD TO TERMINAL 3. USE TABLE BELOW FOR RESISTOR VALUE REQUIRED FOR DESIRED TIME-OUT INTERVAL.

TIME IN SEC FROM 10 SEC TO:	RESISTOR MEGOHM	EFFECT ON DELAYED HOLD RELEASE OPTIONS	
		ZC	ZJ
7.5	1.2	NONE	
6.7	.75	NOT RECOMMENDED (NOTE 5)	NONE
5.0	.39		
3.4	.20		

IF THE TIME-OUT CYCLE IS REDUCED IN CONJUNCTION WITH ZC OR ZJ OPTION, CONNECT THE RESISTOR AND CAPACITOR AS SHOWN BELOW:

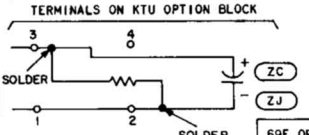

5. WHEN Z OPTION IS PROVIDED WITH ZC OR ZJ OPTIONS, REMOVE THE Z STRAP AND USE THE CAPACITOR LEAD AS A STRAP BETWEEN TERMINALS 1 AND 2.
6. WHEN THE ZC OPTION IS USED DUE TO THE DELAYED RELEASE OF THE HOLDING BRIDGE, SOME TRANSMISSION LOSS IS ENCOUNTERED FOR APPROXIMATELY 1 SECOND WHEN A STATION REENTERS A HELD CALL.
7. ZD OPTION IS REPLACED BY ZJ OPTION, HOWEVER IT IS NOT NECESSARY TO UPDATE CIRCUITS PREVIOUSLY MODIFIED WITH OPTION ZD.
8. (V) OPTION MAY BE USED IN LOCALLY ENGINEERED OR RELAY COMMON AUDIBLE ARRANGEMENTS.

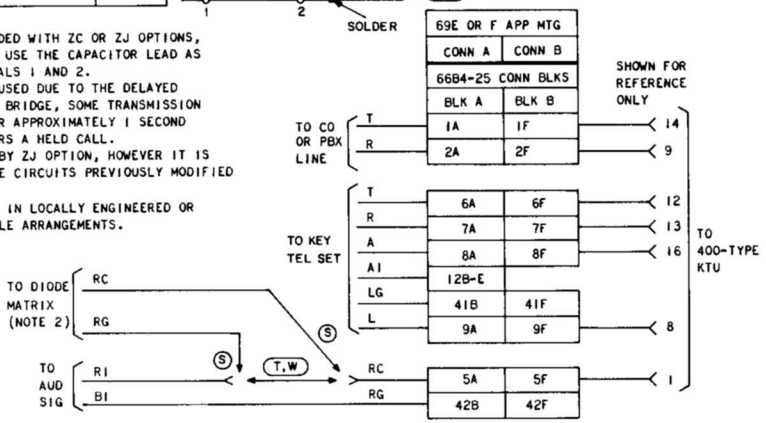

OPTION STRAPPING ON 400-TYPE KTU OPTION BLOCK (NOTE 8)

FEATURES			OPTION	STRAP TERMINALS	
				400D (NOTE 1)	400A, B AND C
AUDIBLE SIGNALS	INTERRUPTED RING		W	5 TO 8	5 TO 6
	STEADY RING		T	6 TO 8	4 TO 6
	COMMON WITH DIODE MATRIX CONTROL		S	5 TO 8	5 TO 6
VISUAL HOLD CIRCUIT	LAMP WINK		Y	7 TO 10	8 TO 9
	LAMP STEADY		X	7 TO 9	7 TO 9
TIME-OUT CONTROL (NOTES 3 AND 4)	SHORT TIME DELAY (APPROXIMATELY 10 SEC)		Z (NOTE 5)	1 TO 2	1 TO 2
	LONG TIME DELAY (APPROXIMATELY 30 SEC)				
DELAYED HOLD RELEASE	RELEASE OF HOLDING BRIDGE FROM CO OR PBX BY LINE CURRENT OPENS GREATER THAN	500 MILLISECONDS WHEN ASSOCIATED WITH NO. 1 ESS HAVING RESWITCH CAPABILITY * (USE 5 UF CAPACITOR, 601A OR EQUIVALENT) † (USE 1.62 UF CAPACITOR, 701G OR EQUIVALENT)	ZC (NOTE 6)	2 TO 3	
		50 MILLISECONDS WHEN ASSOCIATED WITH NO. 5 X-BAR CENTREX HAVING AUTOMATIC PERMANENT SIGNAL RELEASE * (USE 0.5 UF CAPACITOR, 575B OR EQUIVALENT) † (USE 0.162 UF CAPACITOR OR EQUIVALENT)	ZJ (NOTE 7)	2 TO 3	

* WHEN USED WITH Z OPTION
† WHEN USED WITH LONG TIME

Fig. 45—Connections From 400A, B, C, or D (MD) KTU (CO/PBX Line Circuit) in 69E or F Apparatus Mounting to External Connecting Blocks

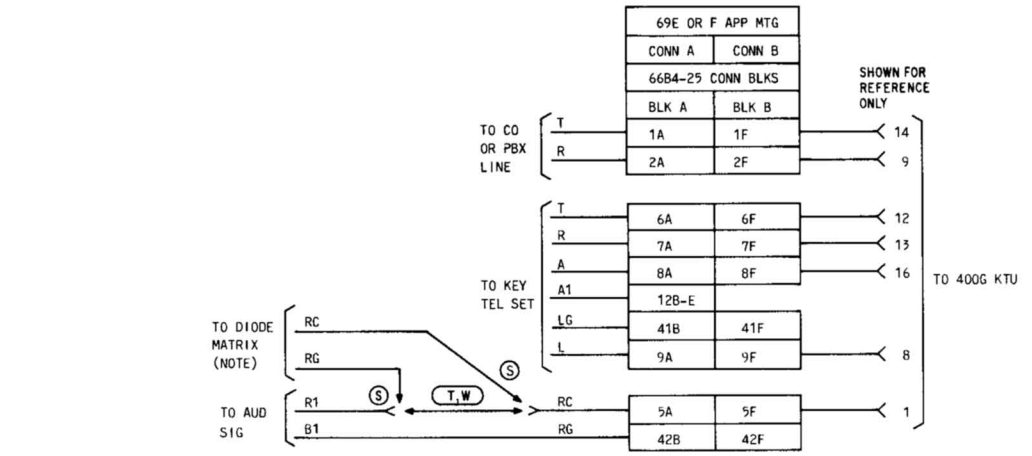

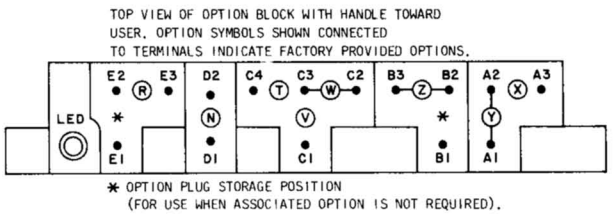

OPTION	CONNECT OPTION PLUG TO TERMINALS	FACTORY PROVIDED
Z	B2-B3	✓
Y	A1-A2	✓
X	A2-A3	
T	C3-C4	
W	C2-C3	✓
V	C1-C3	
R	E2-E3	

OPTIONS

OPT	FEATURES		
Z	TIMEOUT	LONG TIME DELAY (APPROXIMATELY 20 SECONDS)	
		SHORT TIME DELAY (APPROXIMATELY 5 SECONDS)	
Y	VISUAL	LAMP WINK	
X	HOLD CKT	LAMP STEADY	
W	AUDIBLE SIGNAL	INTERRUPTED RING	
T		STEADY RING	
S		COMMON WITH DIODE MATRIX CONTROL	
V		COMMON WITH RELAY CONTROL	
R	DELAYED HOLD RELEASE	RELEASE OF HOLDING BRIDGE FROM CO OR PBX BY LINE CURRENT OPENS	MINIMUM OF 25 MS
			600 MS

RELAY	FUNCTION		
	INC RING CYCLE	ANS OR INIT CALL	HOLD
A	R	O	R
B	O	R	O
C	R	O	O
L	O*	R	O

R = RELEASED
O = OPERATE
* = FOLLOWS RINGING

NOTE:
DIODE MATRIX MUST BE SEPARATELY ORDERED AND INSTALLED.

Fig. 46—Connections From 400G (MD) KTU (CO/PBX Line Circuit) in 69E or F Apparatus Mounting to External Connecting Blocks

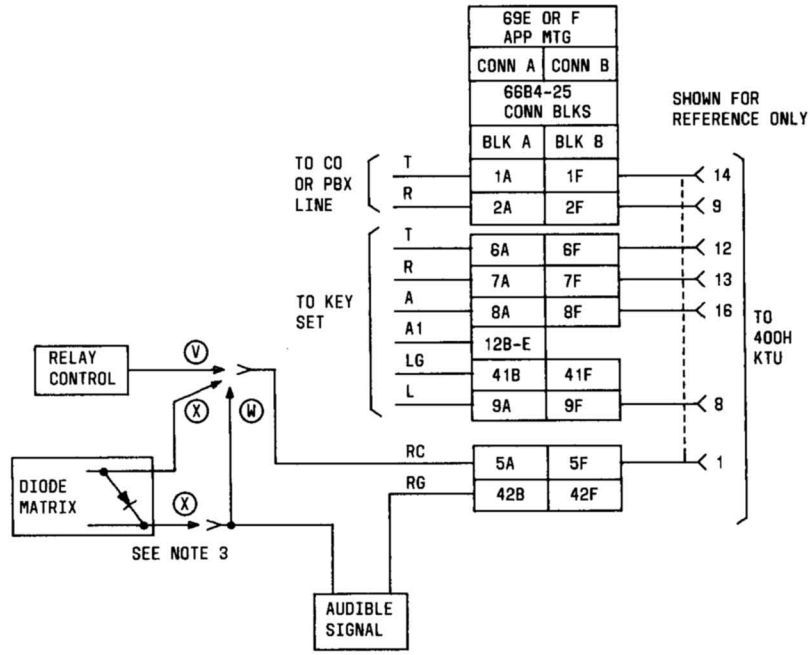

NOTES:
1. DIODE MATRIX MUST BE FURNISHED LOCALLY
2. RING TIME OUT IS NOT ADJUSTABLE, OCCURS IN 5 TO 8 1/2 SECONDS.
3. INSTALLER PROVIDED EXTERNAL PORTION OF OPTIONS.

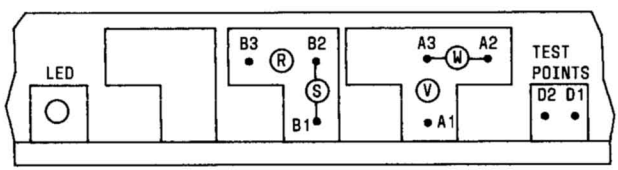

TOP VIEW OF OPTION - HANDLE ASSEMBLY. OPTIONS SYMBOLS SHOWN CONNECTED ARE FACTORY INSTALLED OPTIONS

OPTION	FEATURE	PLUG POSITION
W	INTERRUPTED RING	A2-A3*
V	COMMON AUDIBLE WITH RELAY CONTROL	A1-A3
X	COMMON AUDIBLE WITH DIODE MATRIX	A2-A3*
S	LONG HOLD RLSE #1 ESS, #2 ESS, 812 770, DIMENSION PBX	B1-B2*
R	SHORT HOLD RLSE ALL OTHERS	B2-B3

*FACTORY PROVIDED

Fig. 47—Connections From 400H KTU (CO/PBX Line Circuit) in 69E or F Apparatus Mounting to External Connecting Blocks

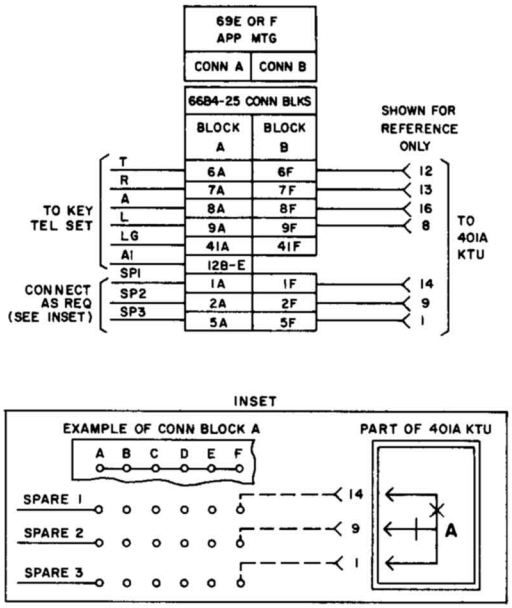

Fig. 48—Connections From 401A KTU (Manual Intercom Line Circuit) in 69E or F Apparatus Mounting to External Coonnecting Blocks

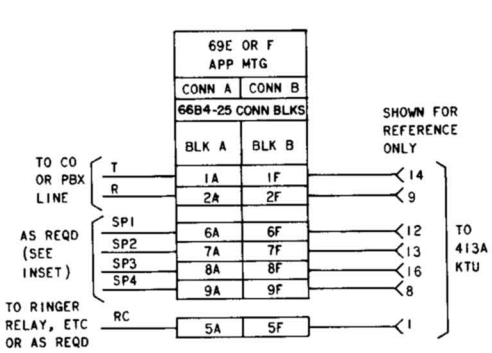

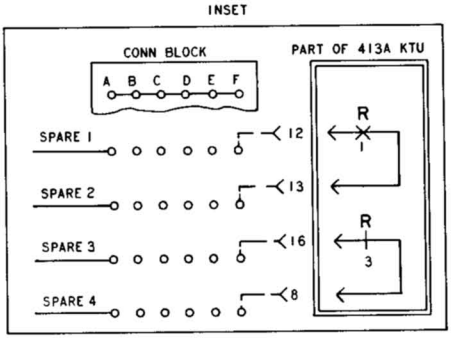

OPTION STRAPPING ON 413A KTU OPTION BLOCK

FEATURES		OPTION	STRAP TERMINALS
AUDIBLE SIGNALS	STEADY RING	X	9 TO 10
	INTERRUPTED RING	Z	8 TO 10

Fig. 49—Connections From 413A KTU (Auxiliary Ringup Circuit) in 69E or F Apparatus Mounting to External Connecting Blocks

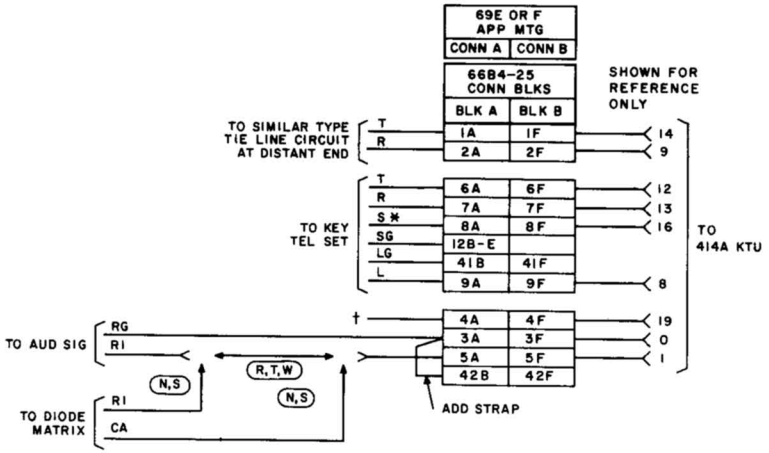

* SIGNAL KEY MAY BE A CONVERTED PICKUP KEY OR ANY EXTERNAL NONLOCKING KEY.
† SPARE A RELAY CONTACT (FOR CONTROL PURPOSE AS DESIRED).

OPTION STRAPPING ON 414A KTU OPTION BLOCK

FEATURES			OPTION	STRAP TERMINALS
AUDIBLE SIGNALS	UNDER CONTROL OF TIME-OUT CIRCUIT (B RELAY)	INTERRUPTED RING	W	7 TO 8
		STEADY RING	T	6 TO 7
		COMMON WITH DIODE MATRIX CONTROL	S	7 TO 8
	UNDER CONTROL OF R RELAY	STEADY RING	R	4 TO 6
		COMMON WITH DIODE MATRIX CONTROL	N	
TIME-OUT	10 SECONDS		X	1 TO 2
	16 SECONDS		Z	2 TO 3
	23 SECONDS		WITHOUT X OR Z	REMOVE X OR Z STRAPS
AUDIBLE RINGBACK TONE			M	9 TO 10

Fig. 50—Connections From 414A KTU (Manual Signaling, Ringdown Private Line Circuit) in 69E or F Apparatus Mounting to External Connecting Blocks

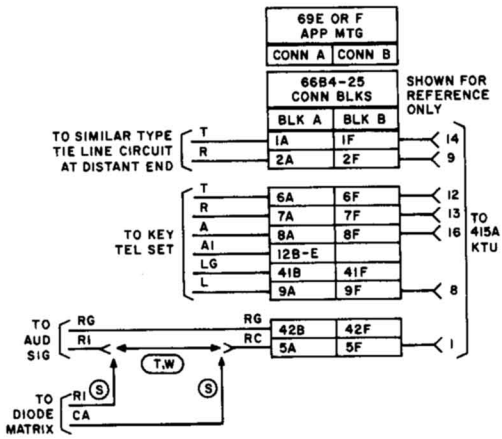

* FACTORY WIRED ON KTU

† FOR IDLE LINE TERMINATION CONNECT A KS-13490,L1 910 OHM RESISTOR IN SERIES WITH A 542F, 2 UF CAPACITOR ACROSS TERMINALS 9 AND 10. ORDER COMPONENTS LOCALLY AND INSTALL.

OPTION STRAPPING ON 415A KTU OPTION BLOCK†

FEATURES		OPTION	STRAP TERMINALS
AUDIBLE SIGNALS	INTERRUPTED RING	W*	4 TO 6
	STEADY RING	T	5 TO 6
	COMMON WITH DIODE MATRIX CONTROL	S*	4 TO 6
AUDIBLE RINGBACK TONE		M*	1 TO 2
VISUAL HOLD SIGNAL		Y*	7 TO 8

Fig. 51—Connections From 415A KTU (Automatic, DC Signaling, Private Line Circuit) in 69E or F Apparatus Mounting to External Connecting Blocks

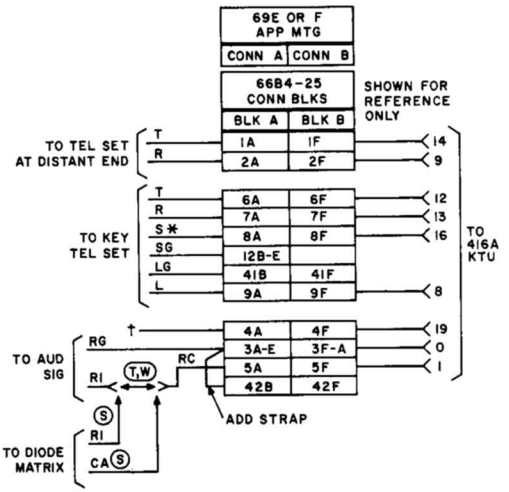

* SIGNAL KEY MAY BE A CONVERTED PICKUP KEY OR ANY EXTERNAL NONLOCKING KEY.

† SPARE CONTACT FOR CONTROL PURPOSES AS DESIRED.

† FACTORY WIRED ON KTU.

OPTION STRAPPING ON 416A KTU OPTION BLOCK

AUDIBLE SIGNALING		STRAP ON KTU
COMMON AUDIBLE WITH DIODE MATRIX	S †	5 TO 8
STEADY RING	T	7 TO 8
INTERRUPTED RING	W †	5 TO 8
AUDIBLE RINGBACK TONE	M †	9 TO 10

Fig. 52—Connections From 416A KTU (Station Line Circuit) in 69E or F Apparatus Mounting to External Connecting Blocks

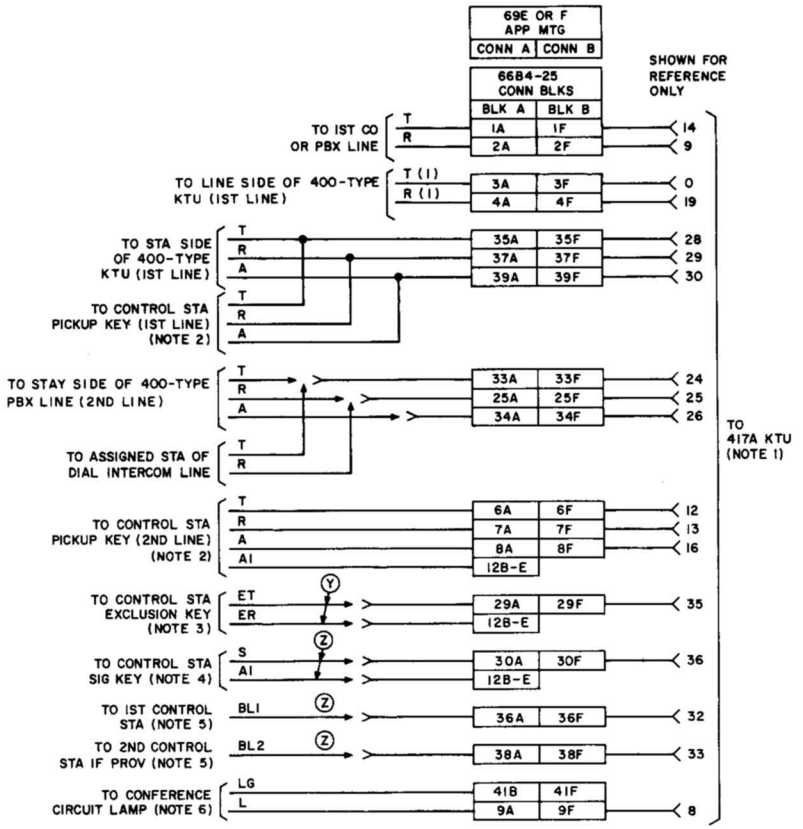

NOTES:

1. THE 417A KTU PROVIDES CONFERENCING BETWEEN:
   (A) 2 CO LINES
   (B) TWO PBX LINES
   (C) A CO OR PBX LINE (A LEAD REQUIRED) AND A DIAL INTERCOM LINE
2. ASSOCIATED LAMP LEADS FROM 400-TYPE KTUS OR INTERCOM CIRCUIT ARE RUN DIRECTLY TO THE TELEPHONE SET.
3. REMOVE AND INSULATE EXCLUSION KEY LEADS FROM IT AND IR IN TELEPHONE SET, IF CONNECTED.
4. SIGNAL KEY MAY BE CONVERTED PICKUP KEY OR AN EXTERNAL NONLOCKING KEY.
5. INSTALL A KS-21765 , L1 DIODE IN "A" LEAD OF TELEPHONE SET WHEN CONFERENCE CIRCUIT IS CONTROLLED BY A NONLOCKING KEY. CONNECT IN ACCORDANCE WITH BUSY LAMP OPTION OF TELEPHONE SET INVOLVED.
6. LAMP INDICATES CONFERENCE CIRCUIT IS ACTIVATED.

OPTION STRAPPING ON 417A KTU OPTION BLOCK

FEATURES		OPTION	STRAP TERMINALS
ONE STATION	CONTROLLED BY NONLOCKING KEY	X	6 TO 10
TWO STATIONS		W*	4 TO 6, 8 TO 10
CONTROLLED BY EXCLUSION KEY		Y	3 TO 5
CONTROLLED BY NONLOCKING KEY		Z	1 TO 2

*INSTALL KS-21765 , L1 DIODES OR EQUIVALENT (PROCURE LOCALLY) BETWEEN TERMINALS AS SHOWN.

Fig. 53—Connections From 417A KTU (Add-on Conference Circuit) in 69E or F Apparatus Mounting to External Connecting Blocks

NOTES:
1. THESE OPTIONS APPLY TO THE SIGNAL KEY AND AUDIBLE SIGNAL AT STA "B" ONLY. THE AUDIBLE SIGNAL AT STA "A" IS UNDER CONTROL OF RELAY "S". THE AUDIBLE SIGNAL AT STA "A" MAY BE PART OF A COMMON AUDIBLE ARRANGEMENT PROVIDED THE DIODE MATRIX IS USED FOR CONTROL.
2. THE AUDIBLE SIGNALS AT STA "A" AND "B" MAY BE PART OF A COMM AUD ARRANGEMENT PROVIDED THE DIODE MATRIX IS USED FOR CONTROL.

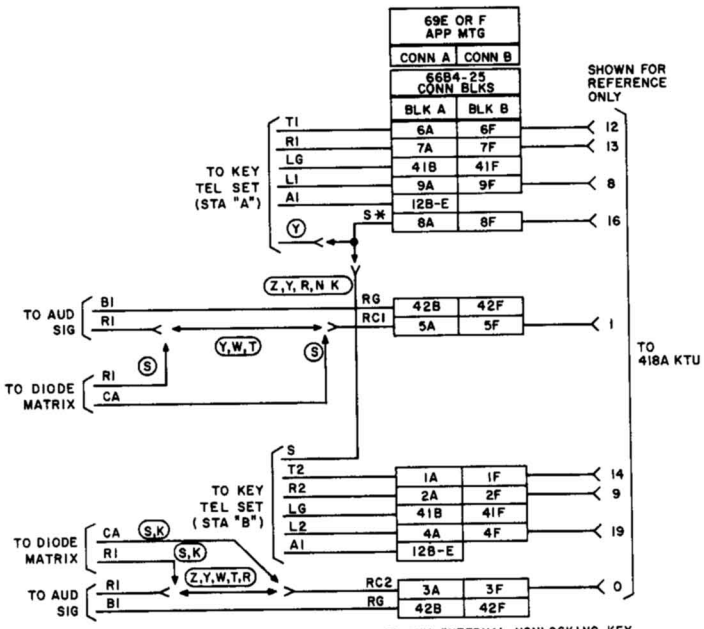

* SIGNAL KEY MAY BE A CONVERTED PICKUP KEY OR ANY EXTERNAL NONLOCKING KEY.

† USE CONTINUOUS METHOD OF STRAPPING.

OPTION STRAPPING ON 418A KTU OPTION BLOCK

FEATURES			OPTION	STRAP TERMINALS
AUDIBLE SIGNALS	TWO-WAY AUTOMATIC	INTERRUPTED RING	W	2 TO 3 TO 4†
		STEADY RING	T	1 TO 2 TO 4†
		COMMON WITH DIODE MATRIX CONTROL	S	2 TO 3 TO 4†
	ONE-WAY AUTOMATIC, ONE-WAY, MANUAL (NOTE 1)	INTERRUPTED RING	R	3 TO 4
		STEADY RING	Z	1 TO 4
		COMMON WITH DIODE MATRIX CONTROL	K	3 TO 4
	TWO-WAY MANUAL (NOTE 2)		Y	
AUDIBLE RING-BACK	TWO-WAY AUTOMATIC		Q	9 TO 10, 5 TO 7 TO 8†
	ONE-WAY AUTOMATIC, ONE-WAY MANUAL		H	5 TO 7, 9 TO 10
	TWO-WAY MANUAL		M	9 TO 10

Fig. 54—Connections From 418A KTU (Short Range, DC Signaling, Private Line Circuit) in 69E or F Apparatus Mounting to External Connecting Blocks

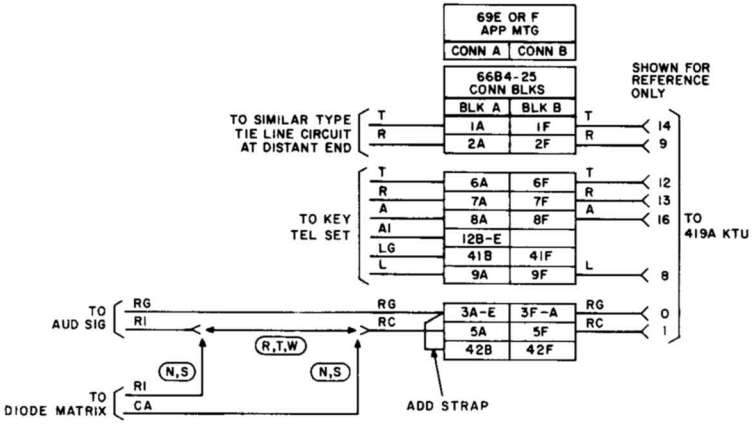

OPTION STRAPPING ON 419A KTU OPTION BLOCK

FEATURES			OPTION	STRAP TERMINALS
AUDIBLE SIGNALS	UNDER CONTROL OF TIME-OUT CIRCUIT (B RELAY)	INTERRUPTED RING	W	6 TO 8
		STEADY RING	T	5 TO 6
		COMMON WITH DIODE MATRIX CONTROL	S	6 TO 8
	UNDER CONTROL OF R RELAY	STEADY RING	R	3 TO 5
		COMMON WITH DIODE MATRIX CONTROL	N	
TIME-OUT	6 SECONDS		X	9 TO 10
	17 SECONDS		Z	7 TO 10
	25 SECONDS		WITHOUT X OR Z	REMOVE X OR Z STRAPS
AUDIBLE RINGBACK TONE			M	1 TO 2

Fig. 55—Connections From 419A KTU (Automatic Signaling, Ringdown Private Line Circuit) in 69E or F Apparatus Mounting to External Connecting Blocks

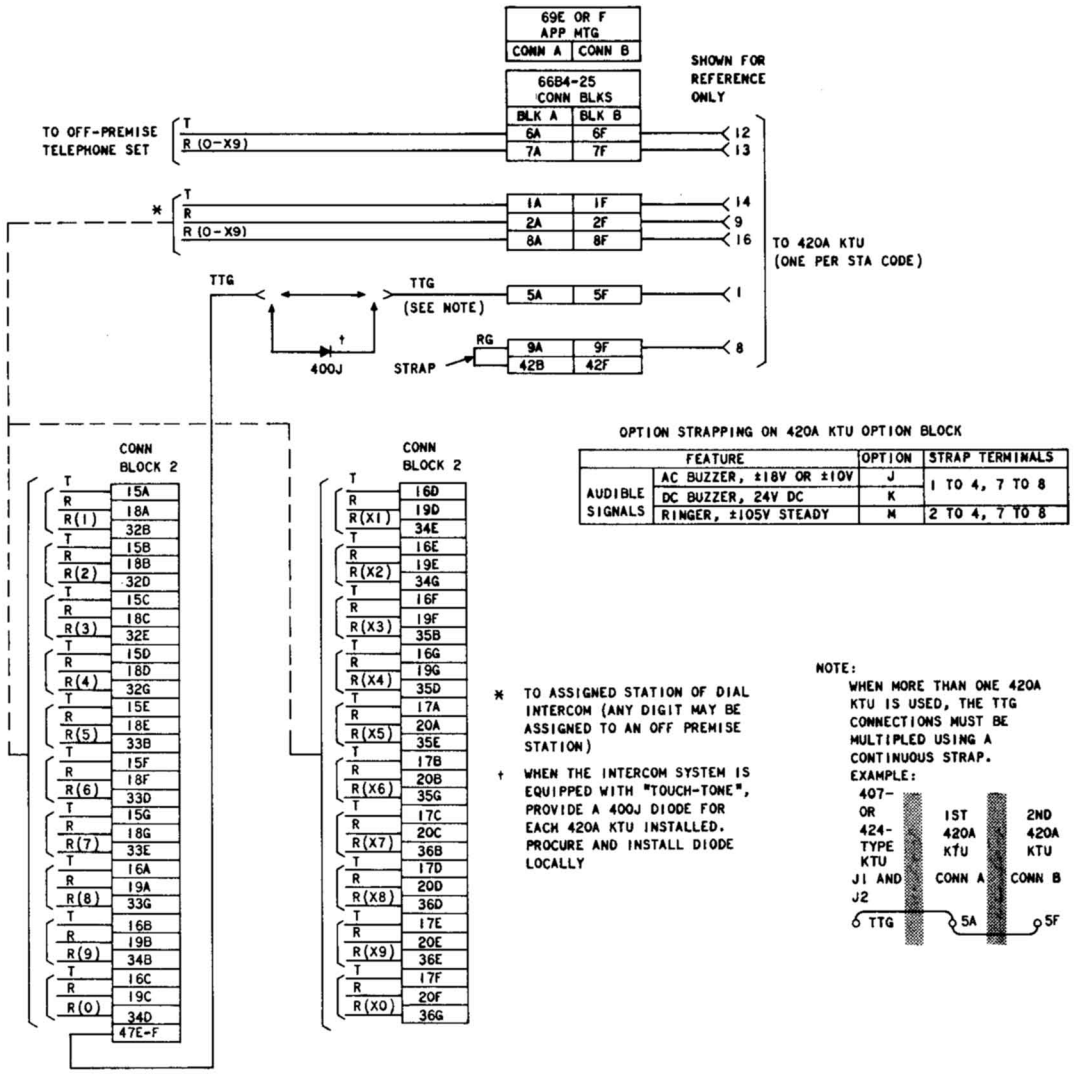

Fig. 56—Connections From 420A KTU (Dial Intercom, Long Line Circuit) in 69E or F Apparatus Mounting to External Connecting Blocks

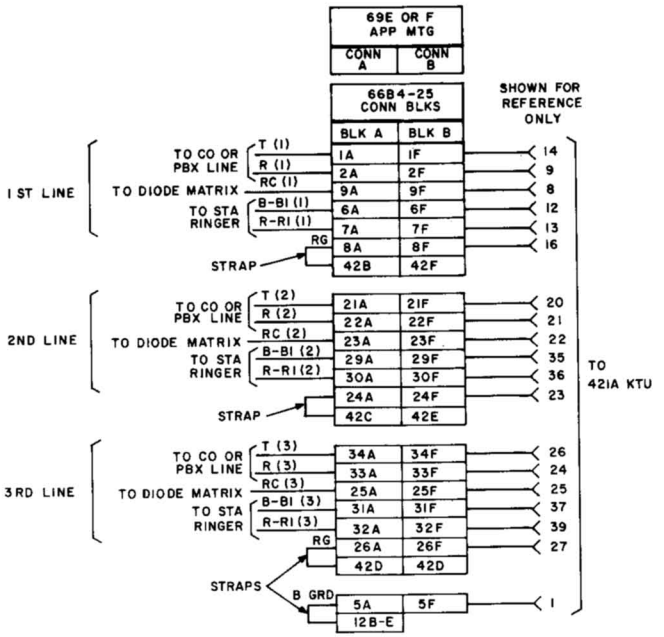

OPTION STRAPPING ON 421A KTU OPTION BLOCK

FEATURE	OPTION	STRAP TERMINALS
GENERAL PURPOSE	W	1 TO 2 5 TO 6 7 TO 8

Fig. 57—Connections From 421A KTU (Power Failure Transfer Circuit) in 69E or F Apparatus Mounting to External Connecting Blocks

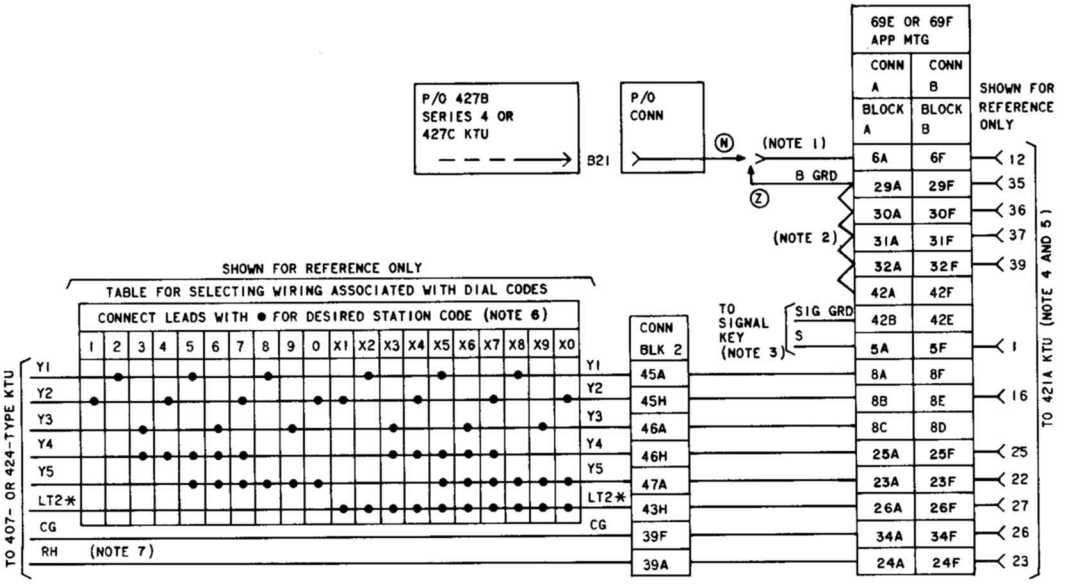

NOTES:

1. (N) WITH "TOUCH-TONE"
   (Z) WITHOUT "TOUCH-TONE"
2. USE CONTINUOUS METHOD OF STRAPPING ON CONNECTING BLOCKS FOR B GROUND.
3. PROVIDE SEPARATE SIGNAL KEY FOR EACH STATION CODE TO BE SELECTED.
4. PROVIDE A SEPARATE 421A KTU FOR EACH STATION CODE TO BE SELECTED.
5. IF MORE THAN ONE 421A KTU IS USED FOR DSS, CONNECT AS SHOWN:

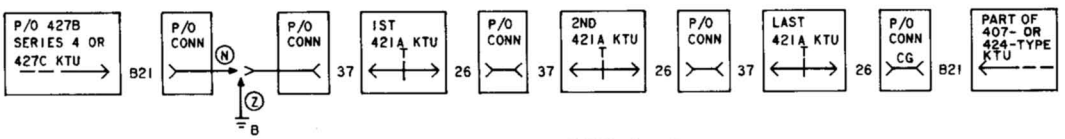

6. SELECT CODE AND CONNECT LEADS FOR SELECTED CODE AS SHOWN IN VERTICAL COLUMN.
7. A 400J DIODE (PROCURE LOCALLY) MUST BE CONNECTED AS SHOWN BELOW BETWEEN THE LK AND RH TERMINALS OF THE 407- OR 424-TYPE KTU WHEN PROVIDING DIAL TONE.

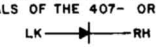

* 424-TYPE KTU ONLY

Fig. 58—Connections From 421A KTU (DSS Feature of Dial Intercom) in 69E or F Apparatus Mounting to External Connecting Blocks

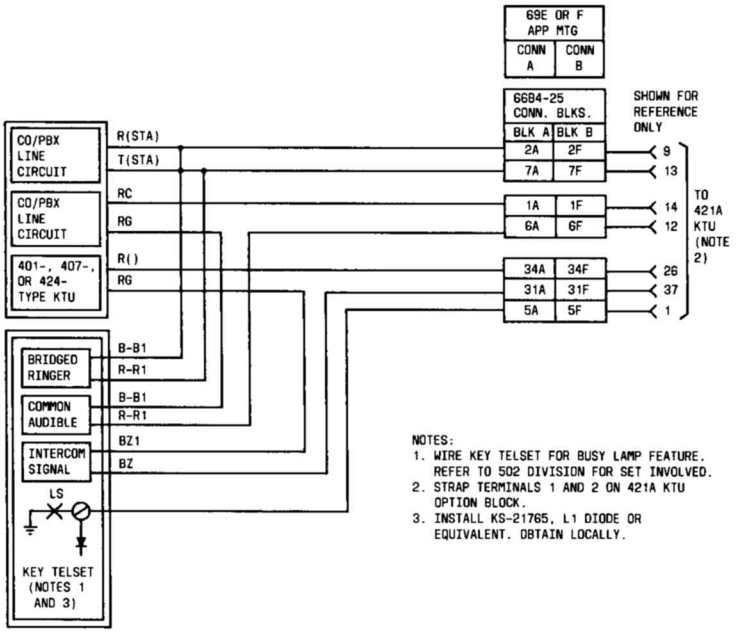

Fig. 59—Connections From 421A KTU (Audible Signal Suppression) in 69E or F Apparatus Mounting to External Connecting Blocks

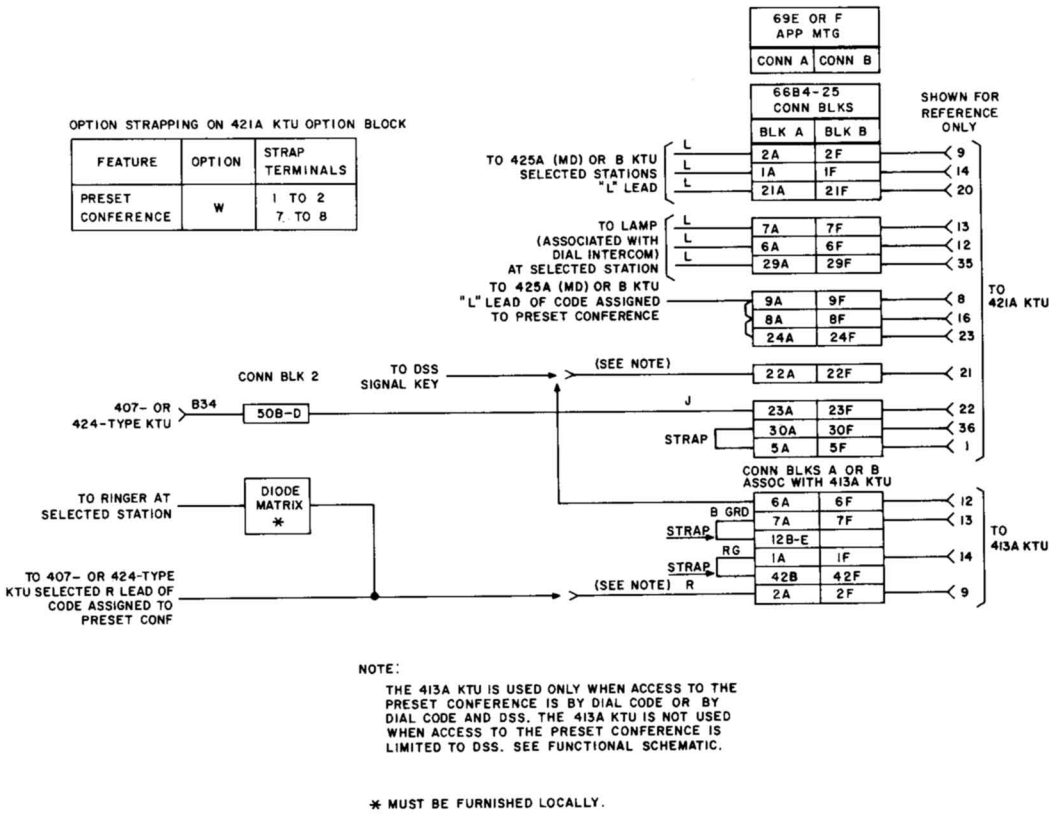

NOTE:

THE 413A KTU IS USED ONLY WHEN ACCESS TO THE PRESET CONFERENCE IS BY DIAL CODE OR BY DIAL CODE AND DSS. THE 413A KTU IS NOT USED WHEN ACCESS TO THE PRESET CONFERENCE IS LIMITED TO DSS. SEE FUNCTIONAL SCHEMATIC.

* MUST BE FURNISHED LOCALLY.

Fig 60—Connections From 421A KTU (Preset Conference Circuit) to Dial Intercom Line in 69E or F Apparatus Mounting to External Connecting Blocks

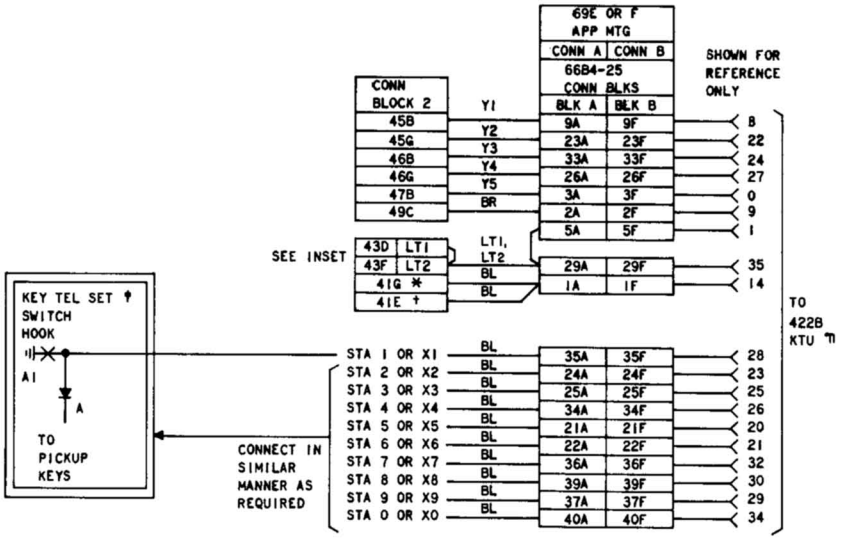

* FOR UNITS 422B KTU
† FOR TENS 422B KTU
♦ FOR CONNECTION OF DIODE IN THE "A" LEAD, USE THE STATION BUSY OPTION AS SHOWN IN THE CONNECTION SECTION OF TYPE SET USED.
¶ PROVIDE A SEPARATE 422B KTU FOR THE UNITS GROUP (1-0, SINGLE-DIGIT NOS.) AND FOR THE TENS GROUP (X1-X0, TWO-DIGIT NOS.)+

OPTION STRAPPING ON 422B KTU OPTION BLOCK

FEATURE	OPTION	STRAP TERMINALS
STATION BUSY TONE	R	6 TO 8

441J OR EQUIVALENT DIODE AS SHOWN

INSET

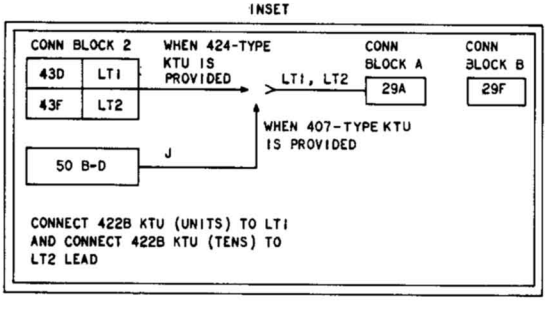

Fig. 61—Connections From 422A (MD) or 422B KTU (Dial Intercom, Station Busy Selector Circuit) in 69E or F Apparatus Mounting to External Connecting Blocks

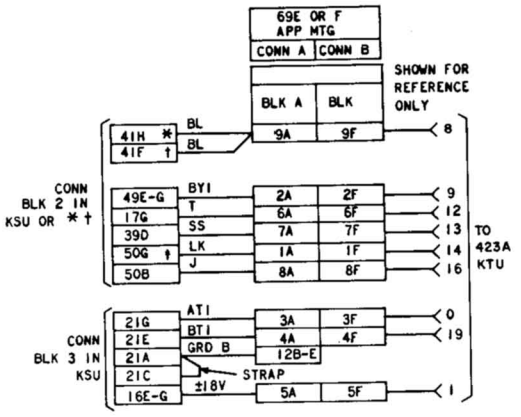

* TO CONNECTING BLOCK TERMINAL ASSOCIATED WITH MOUNTING FACILITY FOR UNITS 422B KTU.

† TO CONNECTING BLOCK TERMINAL ASSOCIATED WITH MOUNTING FACILITY FOR TENS 422B KTU.

† WHEN ADDING THE 423A KTU TO A SYSTEM EQUIPPED FOR "TOUCH-TONE" (426A AND 427B (SERIES 4) OR C KTUS). A 400J DIODE MUST BE INSTALLED BETWEEN THE "RH" AND "LK" LEADS OF THE 407- OR 424-TYPE KTU. REWIRE AS FOLLOWS:

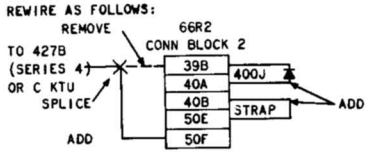

IF THE SYSTEM IS EQUIPPED WITH DSS (421A KTU), REWIRE "RH" LEADS BY TERMINATING ONE LEAD TO TERMINAL 50F AND THE OTHER LEAD TO A 183A2 ADAPTER INSTALLED OVER TERMINALS 50G AND 50H.

OPTION STRAPPING ON 423A KTU OPTION BLOCK

OPTION	FEATURES	STRAP TERMINALS
T	DIAL TONE	1 TO 2
R	STATION BUSY TONE	4 TO 6
S	AUDIBLE RINGBACK	$

$ REQUIRES NO STRAPPING ON KTU

Fig. 62—Connections From 423A KTU (Dial Intercom, Audible Ringback, Dial and Busy Tone Circuit) in 69E and F Apparatus Mounting to External Connecting Blocks

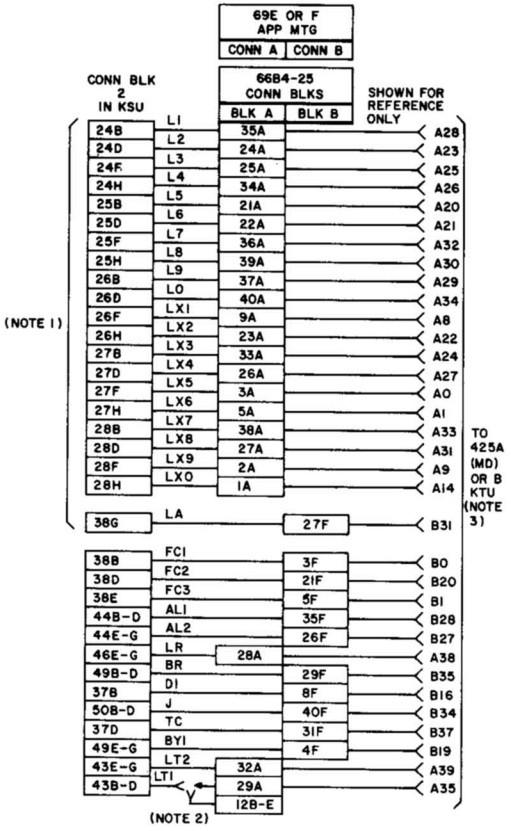

NOTES:

1. REMOVE FACTORY FURNISHED STRAPS FROM THESE TERMINALS.
2. WHEN 407-TYPE KTU IS PROVIDED STRAP TO B GRD. WHEN 424-TYPE KTU IS PROVIDED STRAP TO TERMINAL 43B-D OF CONN BLK 2 IN THE KSU.
3. WHEN THE 425A (MD) OR B KTU IS INSTALLED IN A 69E OR 69F APPARATUS MOUNTING, THE FOLLOWING LEADS MUST BE INSULATED AND STORED: THE S-BK AND Y-BL LEADS IN THE BL-W BINDER; THE BK-O, Y-O, BK-G, AND BL-Y LEADS IN THE G-W BINDER.

Fig. 63—Connections From 425A (MD) or 425B KTU (Dial Intercom, Flashing Lamp Circuit) in 69E or F Apparatus Mounting to External Connecting Blocks

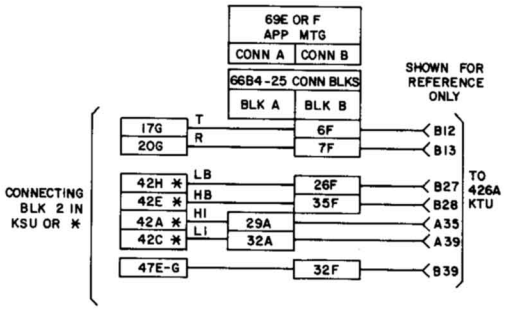

* TO CONNECTING BLOCK TERMINAL ASSOCIATED WITH MOUNTING FACILITY FOR 427B (SERIES 4) OR C KTU, IF EXTERNAL.

Fig. 64—Connections From 426A KTU (Part of TOUCH-TONE Adapter Circuit) in 69E or F Apparatus Mounting to External Connecting Blocks

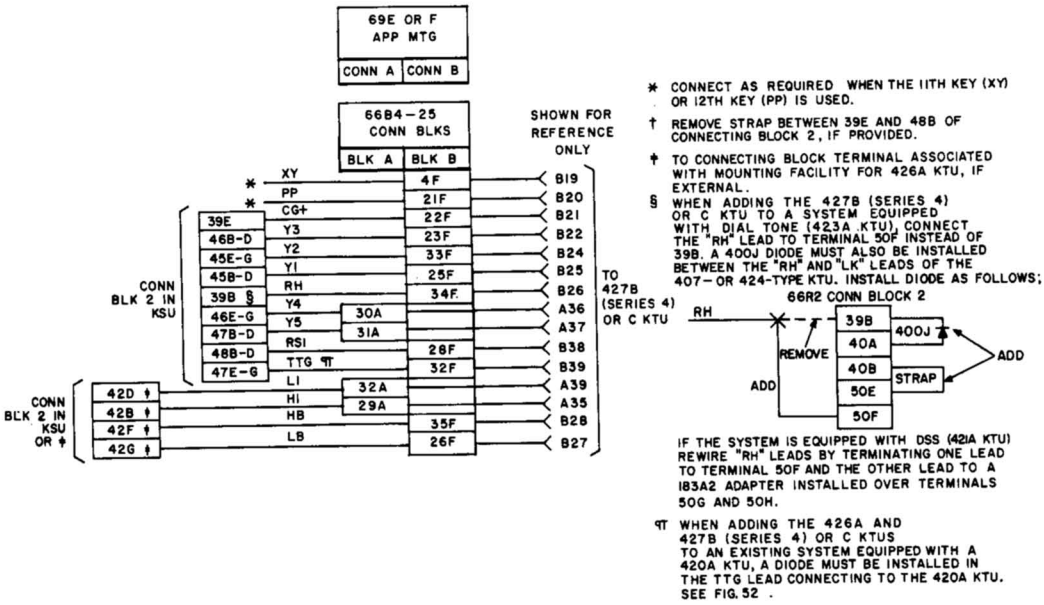

Fig. 65—Connections From 427B (Series 4) or C KTU (Part of TOUCH-TONE Adapter Circuit) in 69E or F Apparatus Mounting to External Connecting Blocks

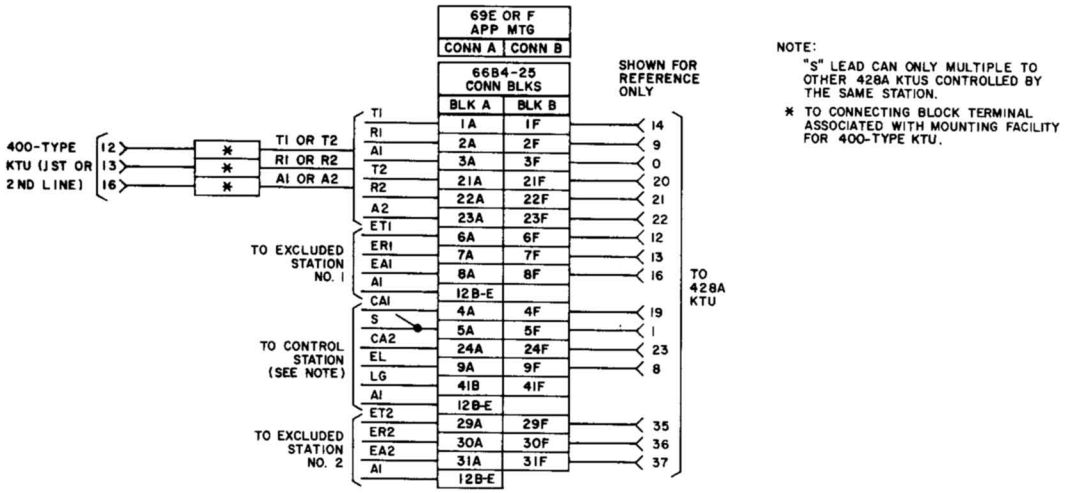

Fig. 66—Connections From 428A KTU (Multiline Exclusion Circuit) in 69E or F Apparatus Mounting to External Connecting Blocks

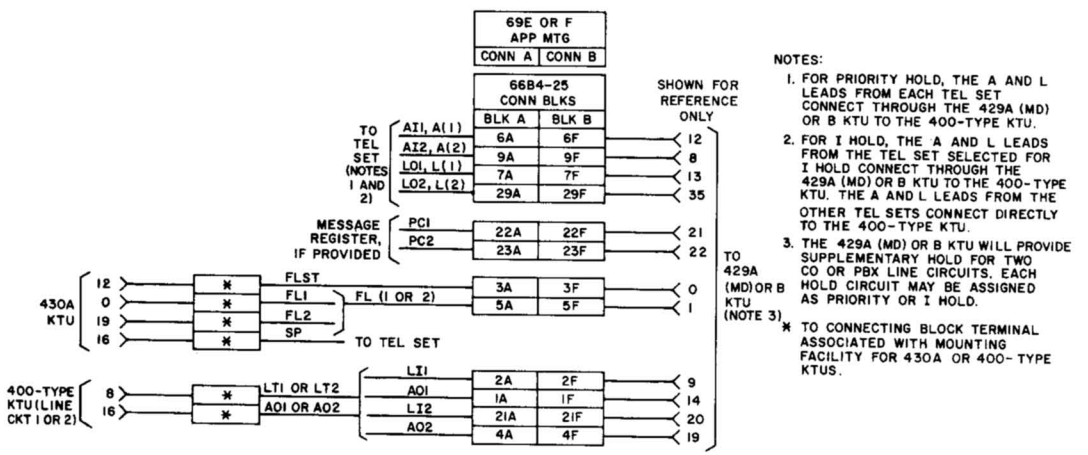

Fig. 67—Connections From 429A (MD) or 429B KTU (Supplementary Hold Detector Circuit) in 69E or F Apparatus Mounting to External Connecting Blocks

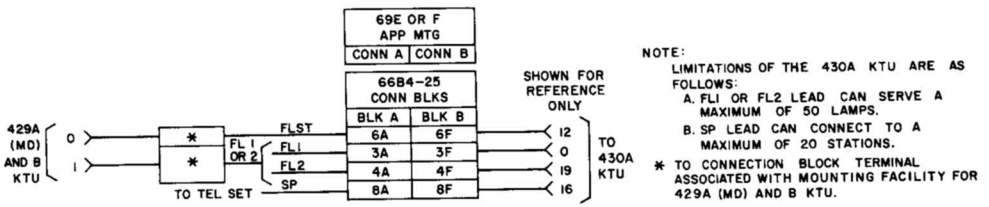

Fig. 68—Connections From 430A KTU (Flutter Generator Circuit) in 69E or F Apparatus Mounting to External Connecting Blocks

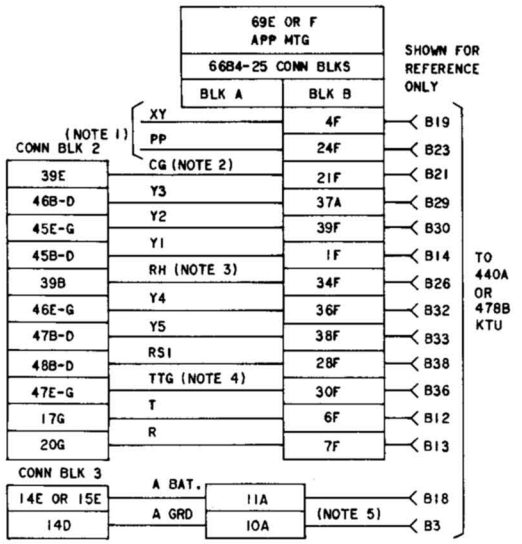

NOTES:

1. CONNECT AS REQUIRED WHEN THE 11TH KEY (XY) OR 12TH KEY (PP) IS USED.
2. REMOVE STRAP BETWEEN 39E AND 48B OF CONNECTING BLOCK 2, IF PROVIDED.
3. WHEN ADDING THE 440 OR 478B KTU TO A SYSTEM EQUIPPED WITH DIAL TONE(423A KTU), CONNECT THE "RH" LEAD TO TERMINAL 50F INSTEAD OF 39B. A 400J DIODE MUST ALSO BE INSTALLED BETWEEN THE "RH" AND "LK" LEADS OF THE 407- OR 424-TYPE KTU. INSTALL DIODE AS FOLLOWS:

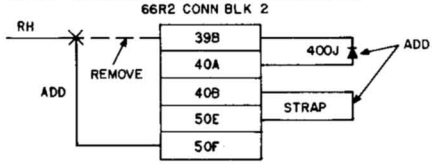

IF THE SYSTEM IS EQUIPPED WITH DSS (421A KTU) REWIRE "RH" LEADS BY TERMINATING ONE LEAD TO TERMINAL 50F AND THE OTHER LEAD TO A 183A2 ADAPTER INSTALLED OVER TERMINALS 50G AND 50H.

4. WHEN ADDING THE 440A KTU TO AN EXISTING SYSTEM EQUIPPED WITH A 420A KTU, A DIODE MUST BE INSTALLED IN THE TTG LEAD CONNECTING TO THE 420A KTU. SEE FIG. COVERING CONNECTIONS OF THE 420A KTU.
5. REQUIRED FOR 478B KTU ONLY.

Fig. 69—Connections From 440A (MD) or 478B KTU (TOUCH-TONE Adapter Circuit) in 69E or F Apparatus Mounting to External Connecting Blocks

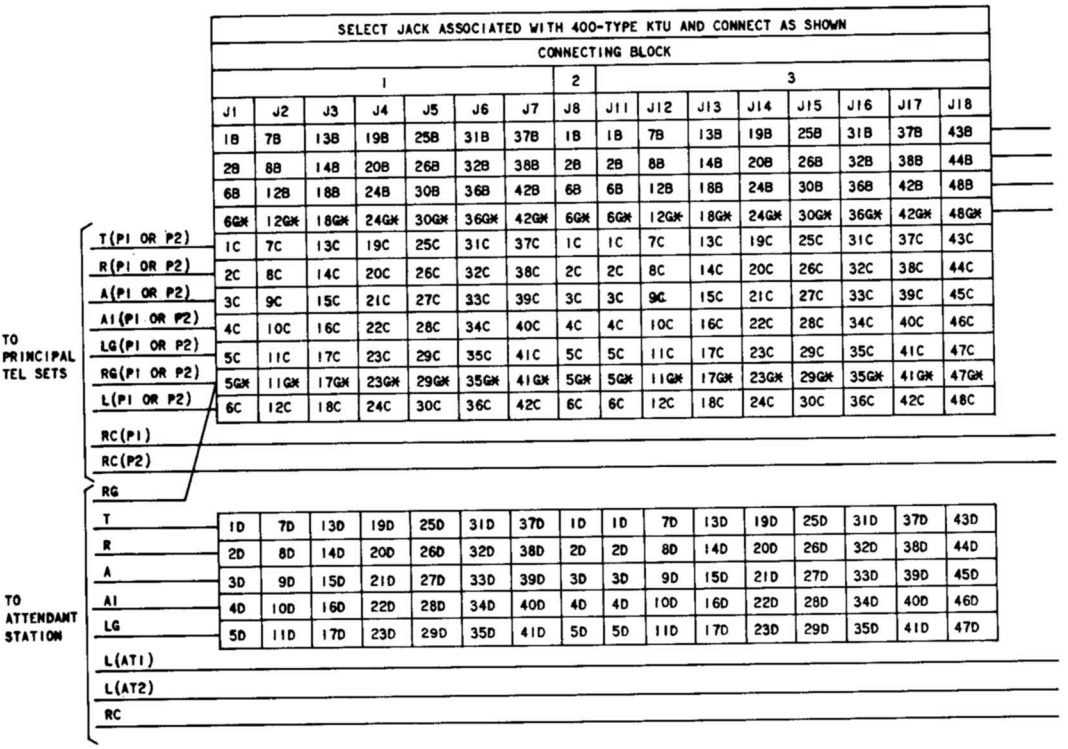

SELECT JACK ASSOCIATED WITH 400-TYPE KTU AND CONNECT AS SHOWN

CONNECTING BLOCK															
1							2	3							
J1	J2	J3	J4	J5	J6	J7	J8	J11	J12	J13	J14	J15	J16	J17	J18
1B	7B	13B	19B	25B	31B	37B	1B	1B	7B	13B	19B	25B	31B	37B	43B
2B	8B	14B	20B	26B	32B	38B	2B	2B	8B	14B	20B	26B	32B	38B	44B
6B	12B	18B	24B	30B	36B	42B	6B	6B	12B	18B	24B	30B	36B	42B	48B
6G*	12G*	18G*	24G*	30G*	36G*	42G*	6G*	6G*	12G*	18G*	24G*	30G*	36G*	42G*	48G*
1C	7C	13C	19C	25C	31C	37C	1C	1C	7C	13C	19C	25C	31C	37C	43C
2C	8C	14C	20C	26C	32C	38C	2C	2C	8C	14C	20C	26C	32C	38C	44C
3C	9C	15C	21C	27C	33C	39C	3C	3C	9C	15C	21C	27C	33C	39C	45C
4C	10C	16C	22C	28C	34C	40C	4C	4C	10C	16C	22C	28C	34C	40C	46C
5C	11C	17C	23C	29C	35C	41C	5C	5C	11C	17C	23C	29C	35C	41C	47C
5G*	11G*	17G*	23G*	29G*	35G*	41G*	5G*	5G*	11G*	17G*	23G*	29G*	35G*	41G*	47G*
6C	12C	18C	24C	30C	36C	42C	6C	6C	12C	18C	24C	30C	36C	42C	48C
1D	7D	13D	19D	25D	31D	37D	1D	1D	7D	13D	19D	25D	31D	37D	43D
2D	8D	14D	20D	26D	32D	38D	2D	2D	8D	14D	20D	26D	32D	38D	44D
3D	9D	15D	21D	27D	33D	39D	3D	3D	9D	15D	21D	27D	33D	39D	45D
4D	10D	16D	22D	28D	34D	40D	4D	4D	10D	16D	22D	28D	34D	40D	46D
5D	11D	17D	23D	29D	35D	41D	5D	5D	11D	17D	23D	29D	35D	41D	47D

NOTES:
1. 448A KTU CONTAINS TWO CIRCUITS.
2. PLACE STRAP ON 400-TYPE KTUS AS FOLLOWS:
   - 400B AND C - STRAP TERMINAL 3 TO 6
   - 400D - STRAP TERMINAL 4 TO 8
   - 400G - CONNECT TERMINAL C1 TO C3
3. TO 400-TYPE KTU ASSOCIATED WITH FIRST CIRCUIT OF 448A KTU.
4. TO 400-TYPE KTU ASSOCIATED WITH SECOND CIRCUIT OF 448A KTU.

* USE 183A2 ADAPTER TO MULTIPLE LEADS
† TO 449A KTU OR TURN KEY IF IMMEDIATE RINGER TRANSFER IS REQUIRED.
‡ TO FIRST AND SECOND PRINCIPAL TEL SETS IF COMMON AUDIBLE IS TO BE USED AND RINGER IS NOT TO BE CUT OFF.

OPTION STRAPPING ON 448A KTU OPTION BLOCK

	OPTION	FEATURE	STRAP TERMINALS	
			1ST CKT	2ND CKT
AUDIBLE SIGNALS	W	INTERRUPTED RING	8 TO 7§	3 TO 5§
	T	STEADY RING	8 TO 6	3 TO 4
	X	STEADY BUZZER	8 TO 10	3 TO 1

§ FACTORY PROVIDED

Fig. 70—Connections From 448A KTU (Variable Delay Timer Circuit) in 69E or F Apparatus Mounting to External Connecting Blocks (Sheet 1 of 2)

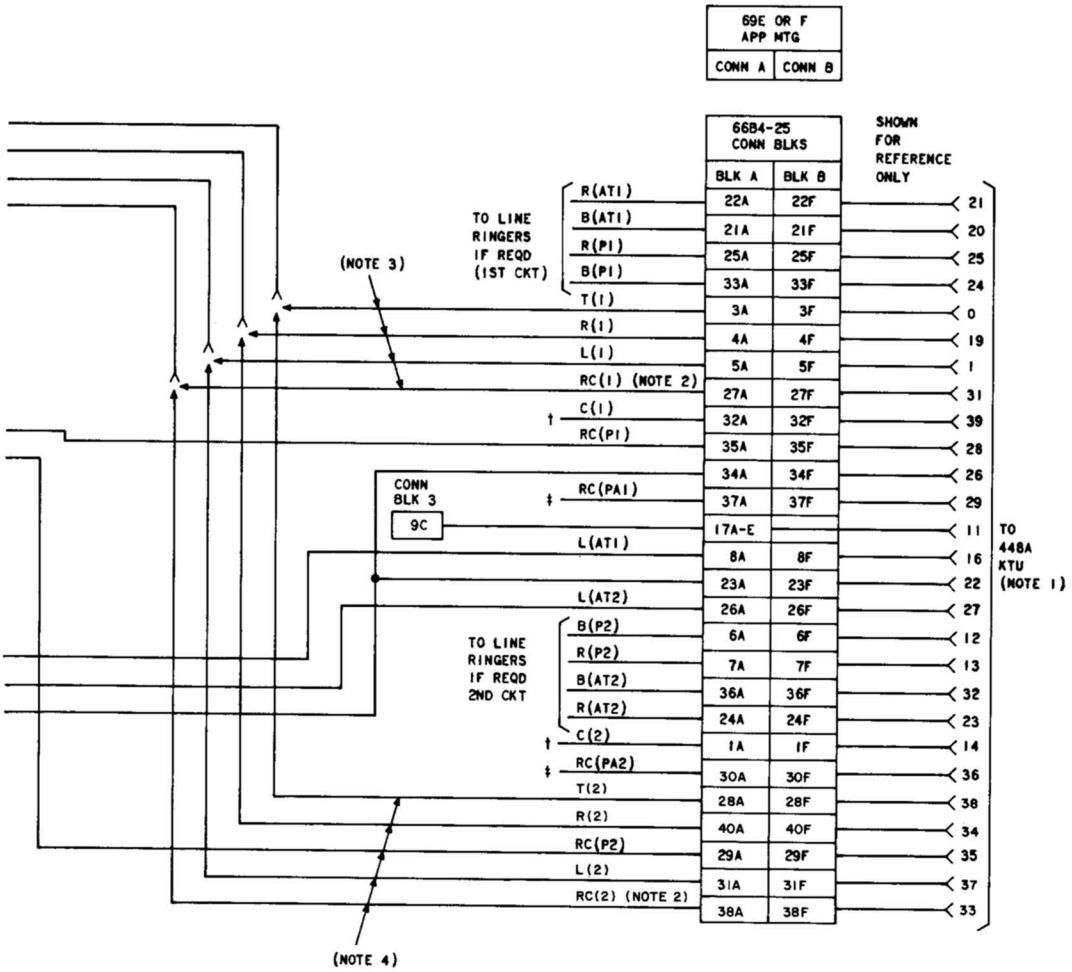

Fig. 70—Connections From 448A KTU (Variable Delay Timer Circuit) in 69E or F Apparatus Mounting to External Connecting Blocks (Sheet 2 of 2)

SELECT JACK ASSOCIATED WITH 400-TYPE KTU AND CONNECT AS SHOWN															
CONNECTING BLOCK															
1							2	4							
J1	J2	J3	J4	J5	J6	J7	J8	J11	J12	J13	J14	J15	J16	J17	J18
1B	7B	13B	19B	25B	31B	37B	1B	1B	7B	13B	19B	25B	31B	37B	43B
2B	8B	14B	20B	26B	32B	38B	2B	2B	8B	14B	20B	26B	32B	38B	44B
5G†	11G†	17G‡	23G†	29G†	35G†	41G†	5G†	5G†	11G†	17G‡	23G†	29G†	35G†	41G†	47G‡
6B	12B	18B	24B	30B	36B	42B	6B	6B	12B	18B	24B	30B	36B	42B	48B
6G†	12G†	18G†	24G†	30G†	36G†	42G†	6G†	6G†	12G†	18G†	24G†	30G†	36G†	42G†	48G‡

R* OR RC†(P1)

B* OR RG†(P1)

T	1C	7C	13C	19C	25C	31C	37C	1C	1C	7C	13C	19C	25C	31C	37C	43C
R	2C	8C	14C	20C	26C	32C	38C	2C	2C	8C	14C	20C	26C	32C	38C	44C
A	3C	9C	15C	21C	27C	33C	39C	3C	3C	9C	15C	21C	27C	33C	39C	45C
AI	4C	10C	16C	22C	28C	34C	40C	4C	4C	10C	16C	22C	28C	34C	40C	46C
LG	5C	11C	17C	23C	29C	35C	41C	5C	5C	11C	17C	23C	29C	35C	41C	47C
L(1)	6C	12C	18C	24C	30C	36C	42C	6C	6C	12C	18C	24C	30C	36C	42C	48C
SG(P1 AND P2)	4D	10D	16D	22D	28D	34D	40D	4D	4D	10D	16D	22D	28D	34D	40D	46D

TO ATTENDANT STATION

S(P1)

LG(P1 AND P2)	5D	11D	17D	23D	29D	35D	41D	5D	5D	11D	17D	23D	29D	35D	41D	47D

L(P1)

B* OR RG†(P2)

R* OR RC†(P2)

L(P2)

S(P2)

T	1D	7D	13D	19D	25D	31D	37D	1D	1D	7D	13D	19D	25D	31D	37D	43D
R	2D	8D	14D	20D	26D	32D	38D	2D	2D	8D	14D	20D	26D	32D	38D	44D
A	3D	9D	15D	21D	27D	33D	39D	3D	3D	9D	15D	21D	27D	33D	39D	45D
AI	4D	10D	16D	22D	28D	34D	40D	4D	4D	10D	16D	22D	28D	34D	40D	46D
LG	5E	11E	17E	23E	29E	35E	41E	5E	5E	11E	17E	23E	29E	35E	41E	47E

TO ATTENDANT STATION

R* OR RC†

B* OR RG†

L(AT1)

L(AT2)

NOTES:
1. 449A KTU CONTAINS TWO CIRCUITS.
2. CONNECT B GRD ONLY IF 448A KTU IS PROVIDED. IF 448A KTU IS PROVIDED, NONE OF THE RINGER CONNECTIONS ARE REQUIRED.
3. TO 400-TYPE KTU ASSOCIATED WITH FIRST CIRCUIT OF 449A KTU.
4. TO 400-TYPE KTU ASSOCIATED WITH SECOND CIRCUIT OF 449A KTU.
5. PLACE STRAP ON 400-TYPE KTU AS FOLLOWS:
   - 400B AND C - STRAP TERMINAL 4 TO 6
   - 400D - STRAP TERMINAL 6 TO 8
   - 400G - CONNECT TERMINAL C3 TO C4

* FOR LINE RINGING
† FOR COMMON AUDIBLE RINGING
‡ USE 183A2 ADAPTER TO MUTLIPLE LEADS

Fig. 71—Connections From 449A KTU (Immediate Transfer Control Circuit) in 69E or F Apparatus Mounting to External Connecting Blocks (Sheet 1 of 2)

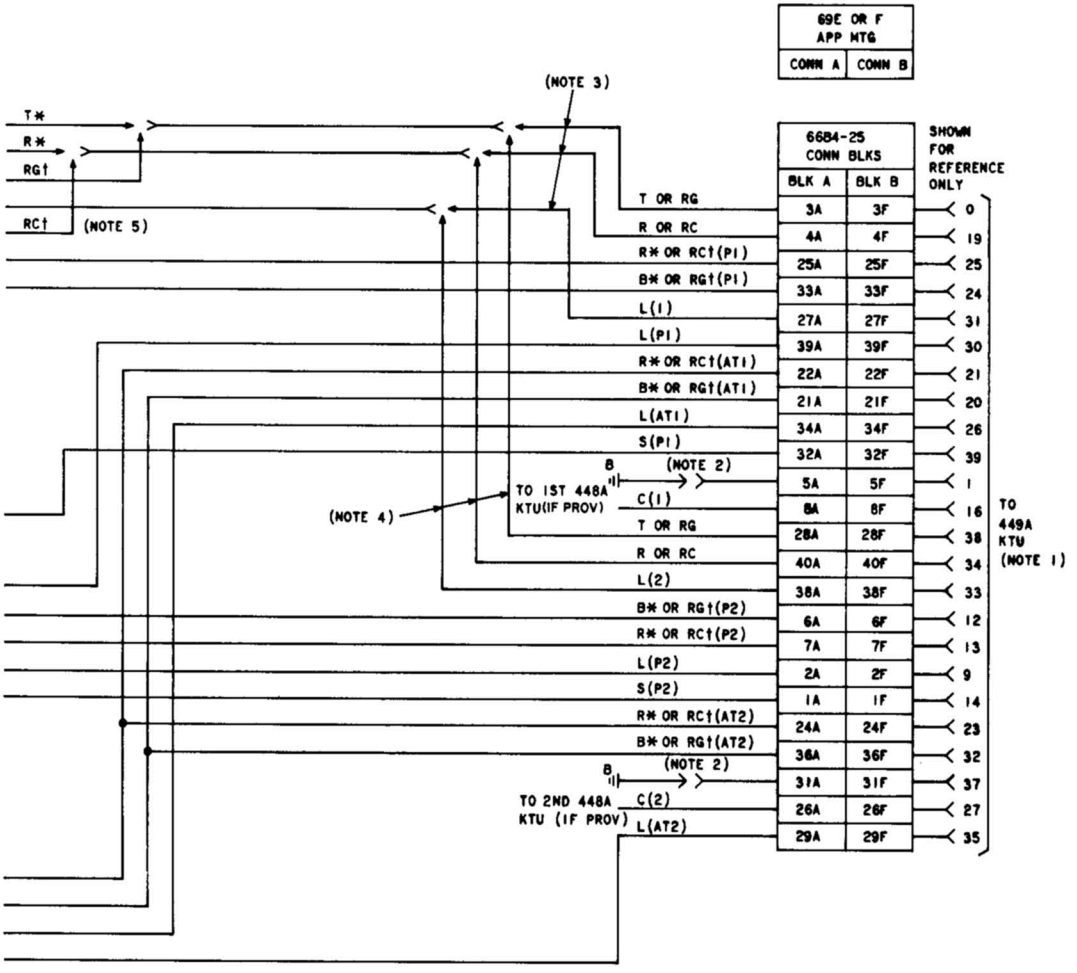

Fig. 71—Connections From 449A KTU (Immediate Transfer Control Circuit) in 69E or F Apparatus Mounting to External Connecting Blocks (Sheet 2 of 2)

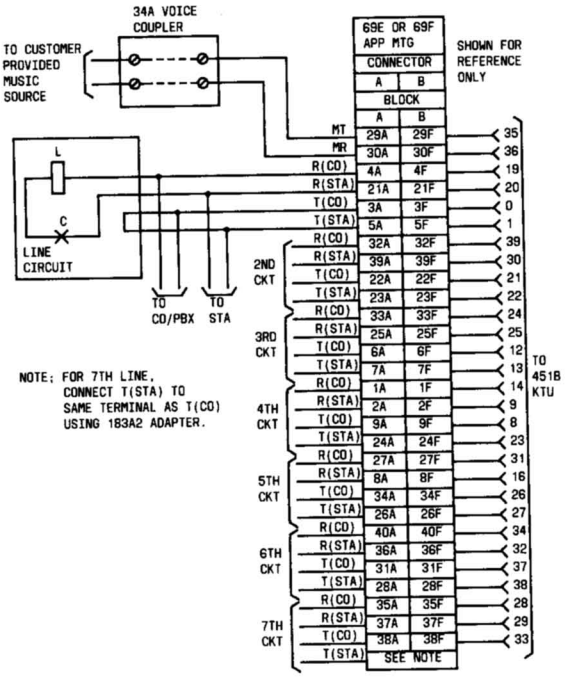

Fig. 72—Connections From 451B KTU (Music-On-Hold) in 69E or F Apparatus Mounting to External Connecting Block

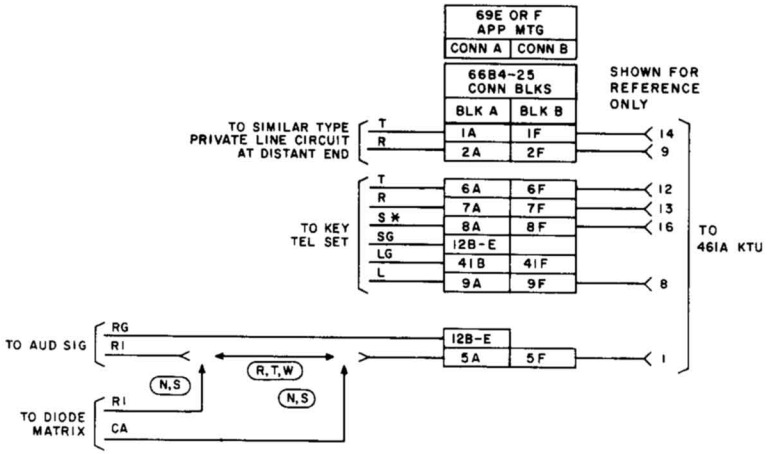

* SIGNAL KEY MAY BE A CONVERTED PICKUP KEY OR ANY EXTERNAL NONLOCKING KEY.

OPTION STRAPPING ON 461A KTU OPTION BLOCK

FEATURES			OPTION	STRAP TERMINALS
AUDIBLE SIGNALS	UNDER CONTROL OF TIME-OUT CIRCUIT (B RELAY)	INTERRUPTED RING	W	7 TO 8
		STEADY RING	T	6 TO 7
		COMMON WITH DIODE MATRIX CONTROL	S	7 TO 8
	UNDER CONTROL OF R RELAY	STEADY RING	R	4 TO 6
		COMMON WITH DIODE MATRIX CONTROL	N	
TIME-OUT	10 SECONDS		X	1 TO 2
	16 SECONDS		Z	2 TO 3
	23 SECONDS		WITHOUT X OR Z	REMOVE X OR Z STRAPS
AUDIBLE RINGBACK TONE			M	9 TO 10

Fig. 73—Connections From 461A KTU (Manual Signaling, Ringdown Private Line Circuit) in 69E or F Apparatus Mounting to External Connecting Blocks

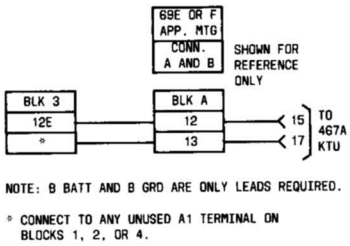

Fig. 74—Connections From 467A KTU (Low-Voltage Monitor Circuit) in 69E or F Apparatus Mounting to External Connecting Blocks

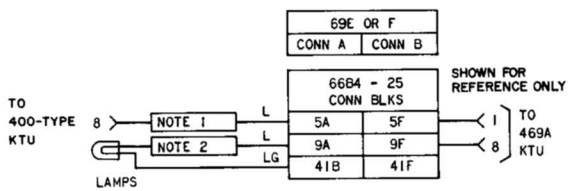

NOTES:
1. LAMP CIRCUIT TO BE EXTENDED. TO CONNECTING BLOCK TERMINAL ASSOCIATED WITH THE MOUNTING FACILITY FOR 400-TYPE KTU.
2. EXTENDED LAMP CIRCUIT TO ADDITIONAL LAMPS. USE ONE 469A KTU FOR EACH 20 ADDITIONAL LAMPS.

Fig. 75—Connections From 469A KTU (Lamp Extender Circuit) in 69E or F Apparatus Mounting to External Connecting Blocks

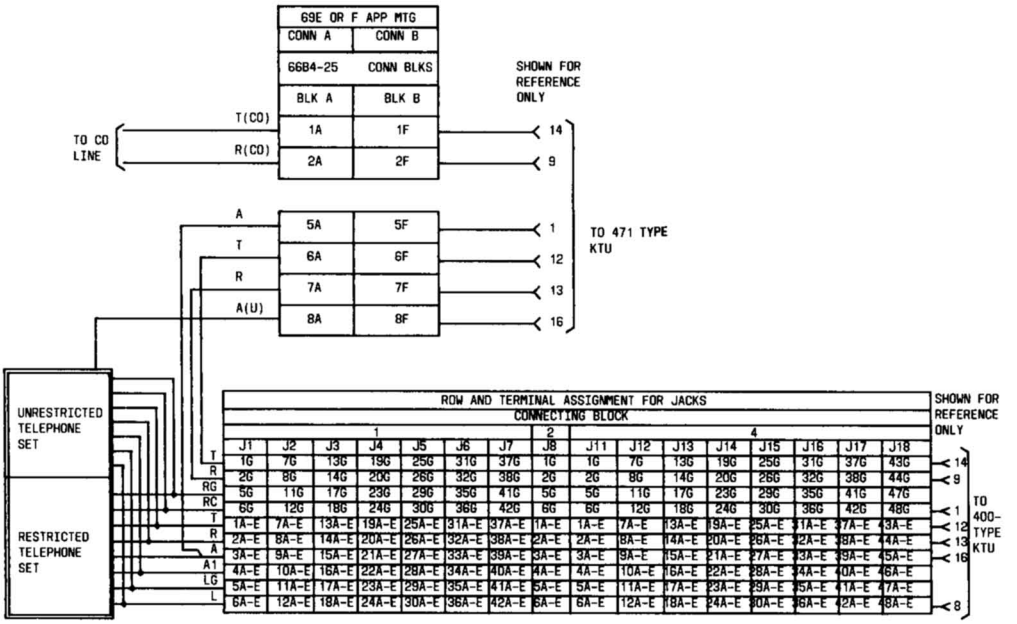

Fig. 76—Connections From 471-Type KTU (Battery Reversal Toll Restriction Circuit) in 69E or F Apparatus Mounting to External Connecting Blocks

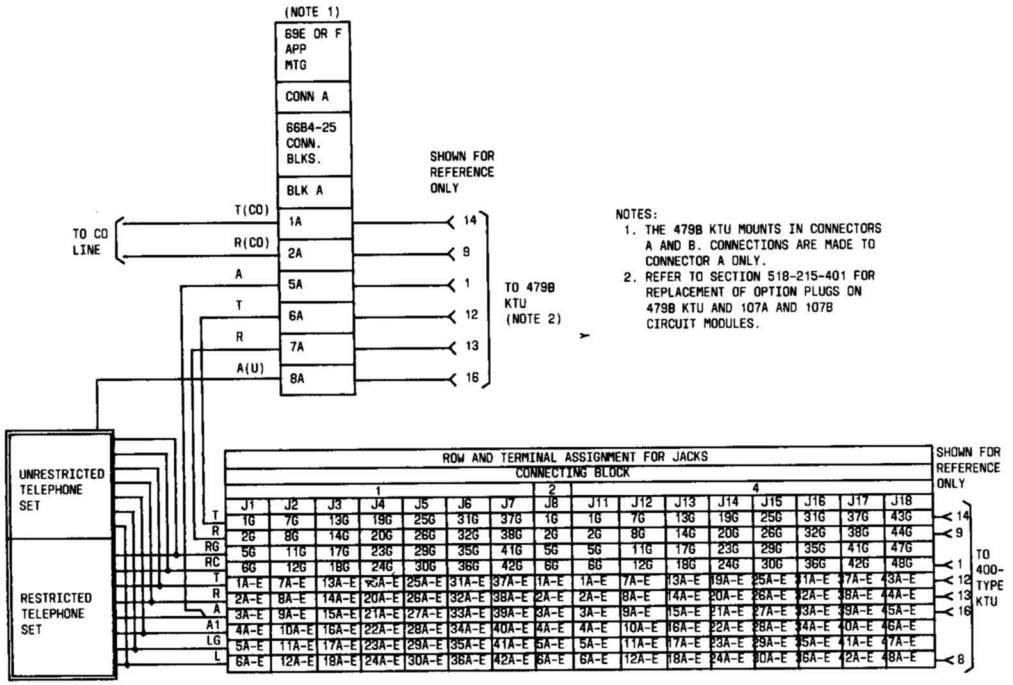

Fig. 77—Connections From 479B KTU (Rotary Dial Toll Restriction Circuit) in 69E or F Apparatus Mounting to External Connecting Blocks

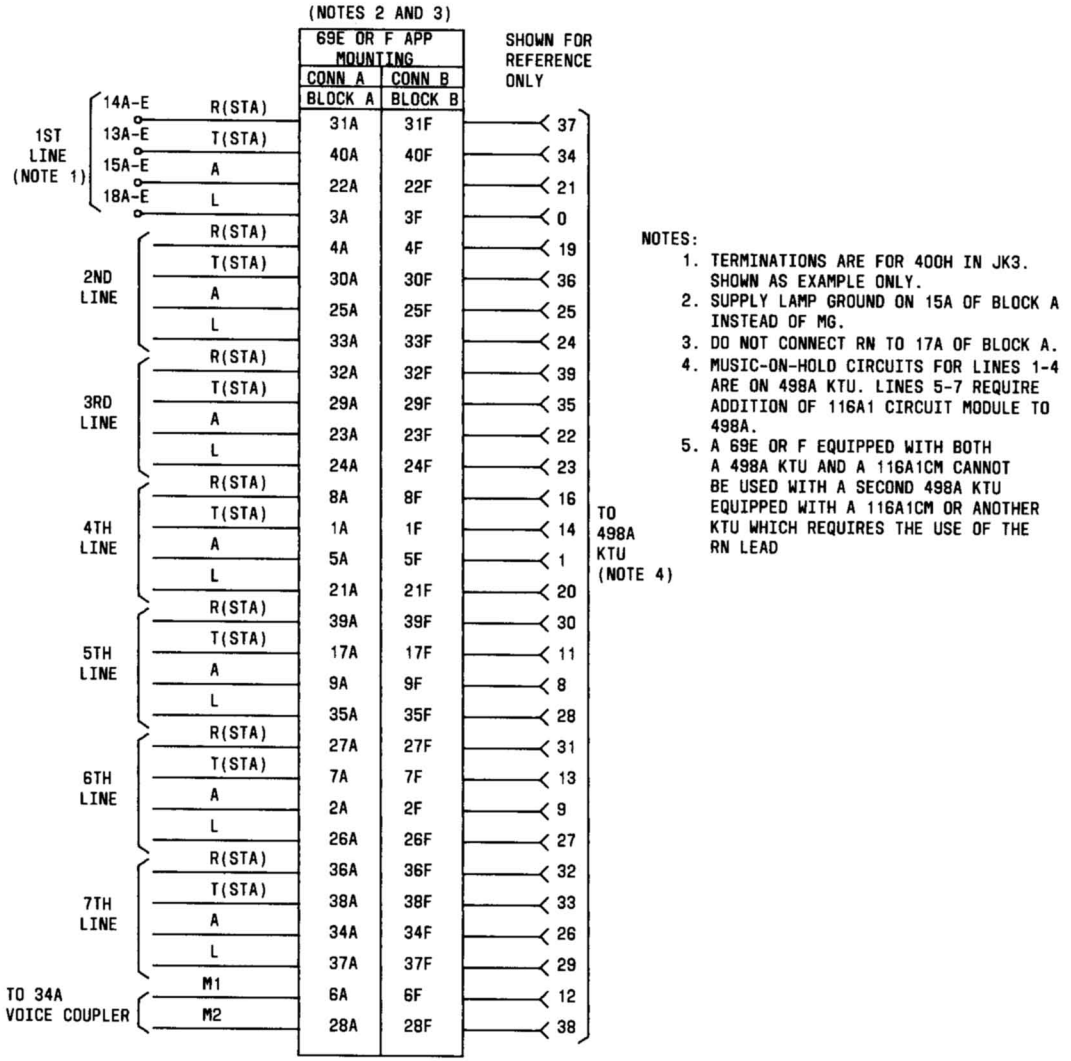

Fig. 78—Connections for 498A KTU (Music-On-Hold) in 69E or F Apparatus Mounting

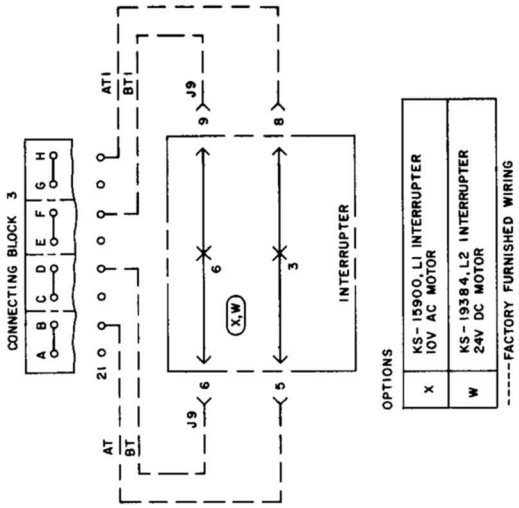

Fig. 79—Factory-Furnished Wiring for AT1 and BT1 Circuits

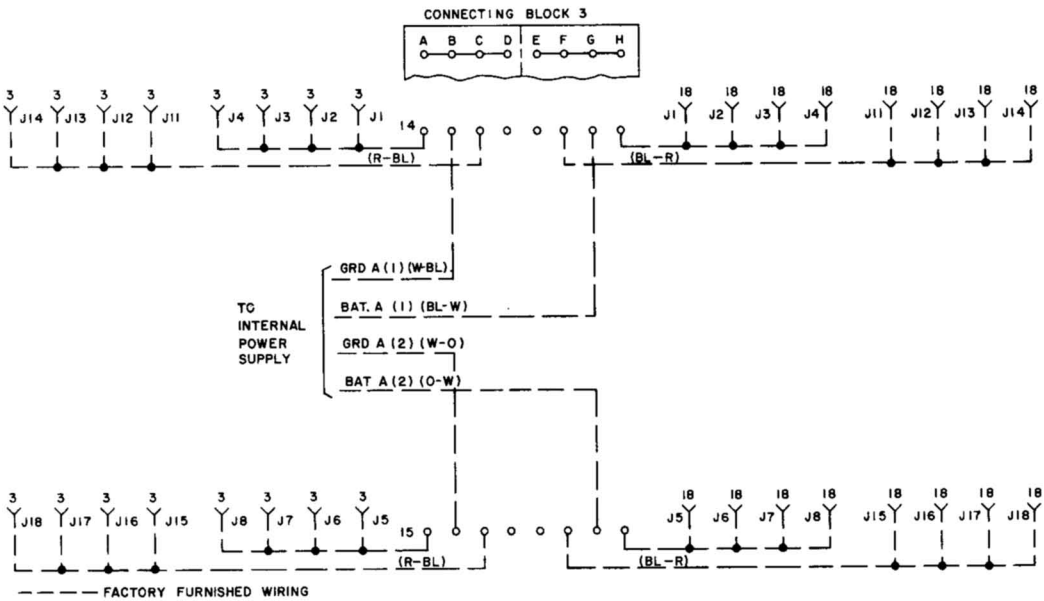

Fig. 80—Factory-Furnished Wiring for Bat. A (1) and Bat. A (2) Circuits

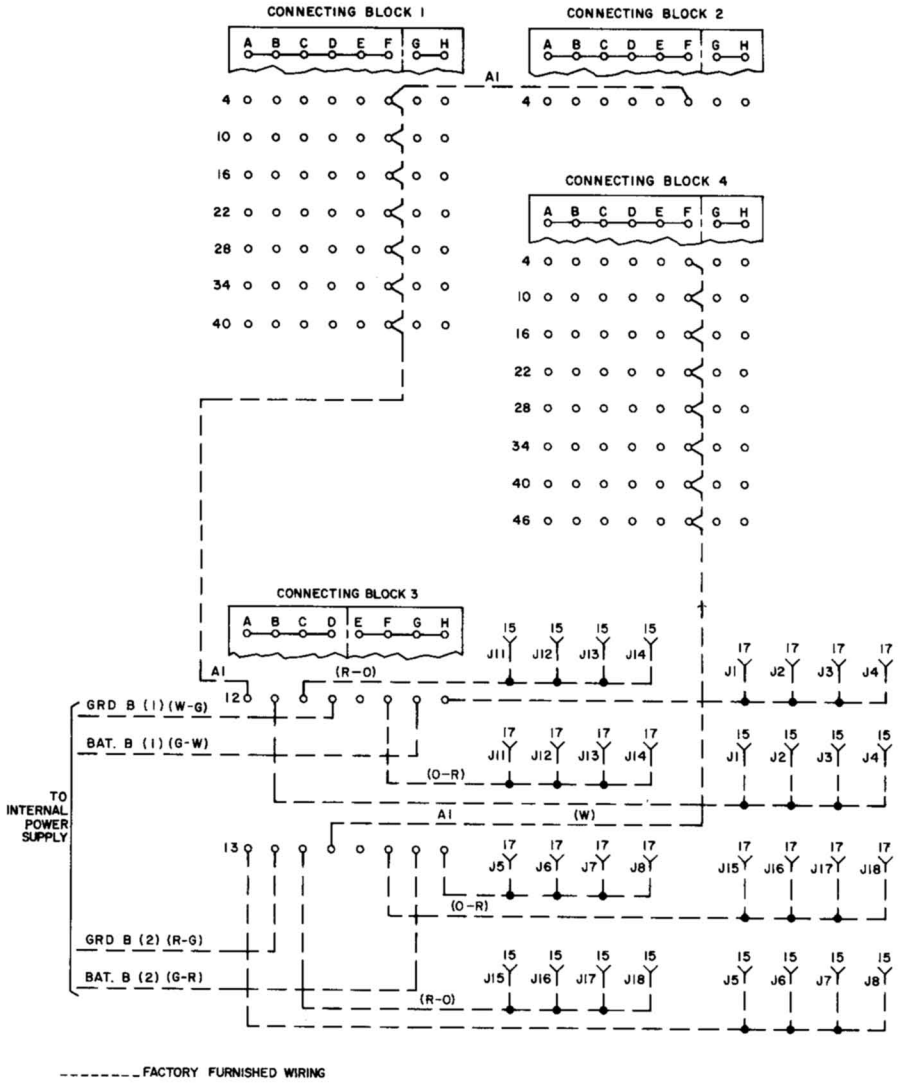

Fig. 81—Factory-Furnished Wiring for Bat. B (1) and Bat. B (2) Circuits

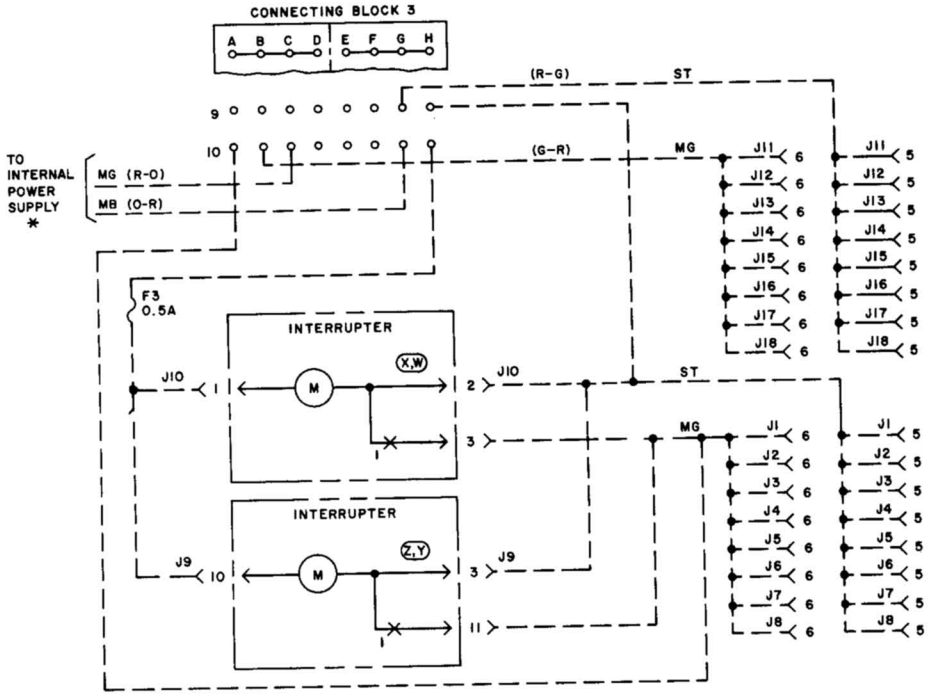

INTERRUPTER OPTIONS

Z	KS-19175,L1 INTERRUPTER 10V AC MOTOR
Y	KS-19385,L2 INTERRUPTER 24V DC MOTOR
X	KS-15900,L1 INTERRUPTER 10V AC MOTOR
W	KS-19384,L2 INTERRUPTER 24V DC MOTOR

— — — — FACTORY FURNISHED WIRING

* WHEN 19C2 POWER SUPPLY ("T" OPTION) IS PROVIDED, AN EXTERNALLY LOCATED RINGING SOURCE MUST BE LOCALLY PROVIDED.

Fig. 82—Factory-Furnished Wiring for MB, MG, and ST Circuits

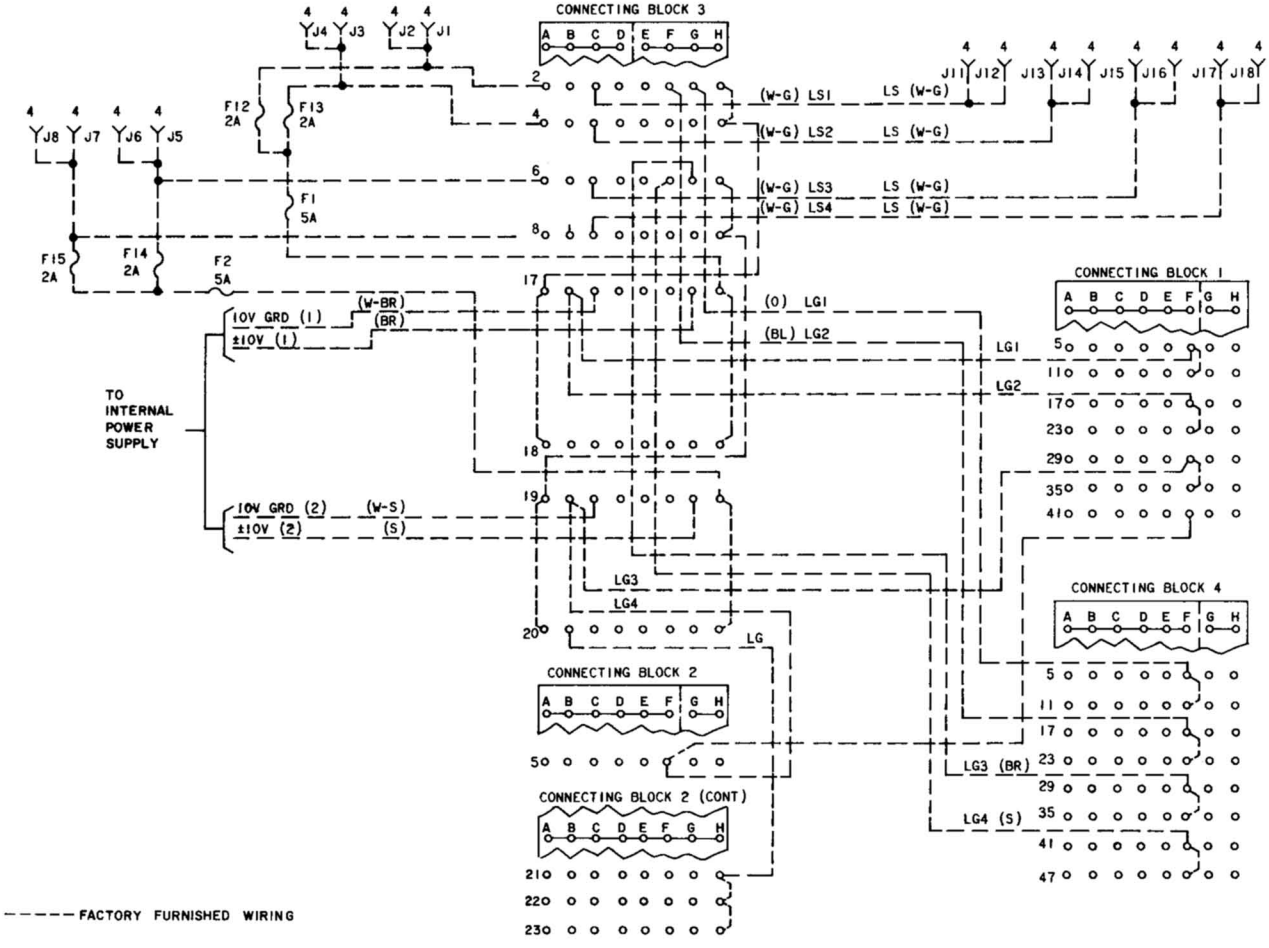

Fig. 83—Factory-Furnished Wiring for Lamp Steady Circuits

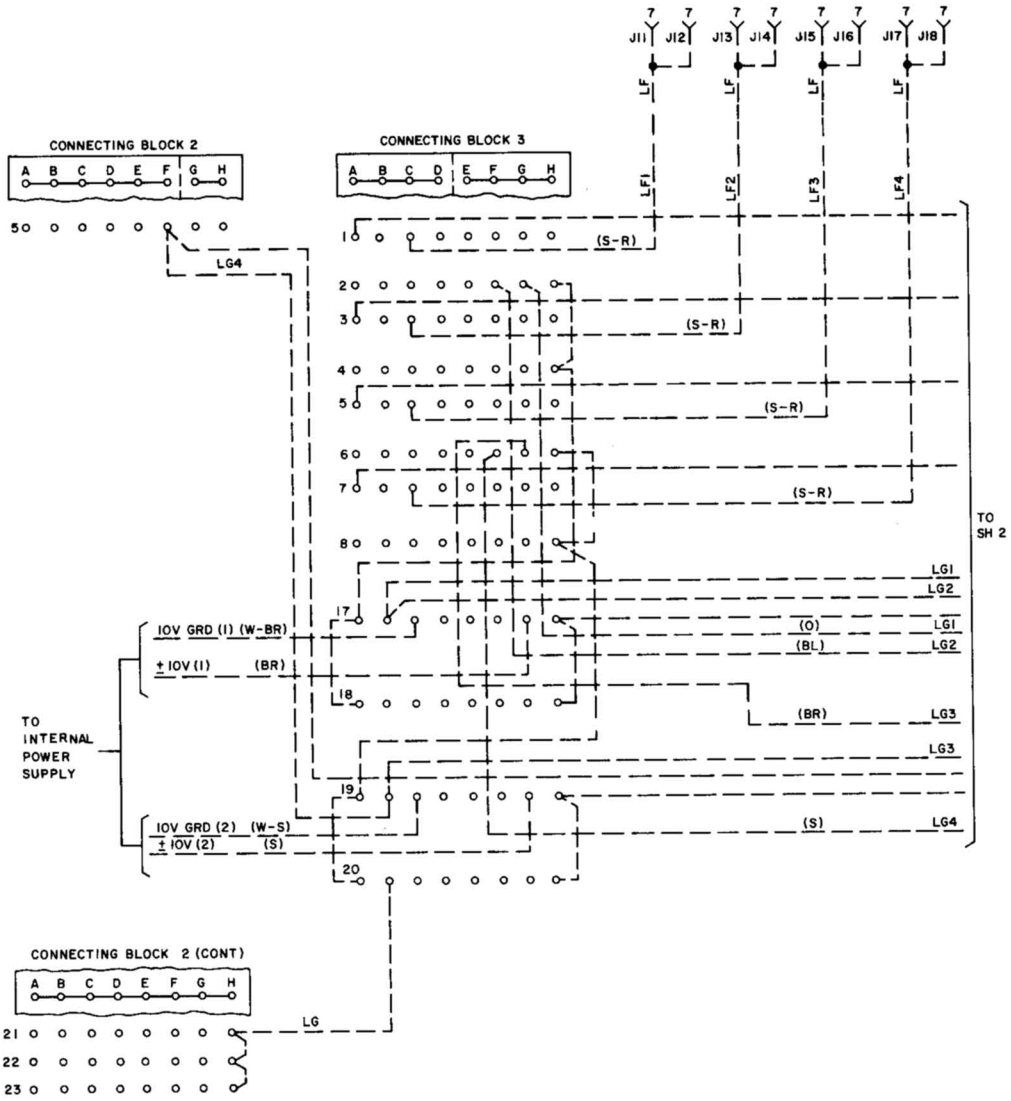

Fig. 84—Factory-Furnished Wiring for Lamp Flash Circuits (Sheet 1 of 2)

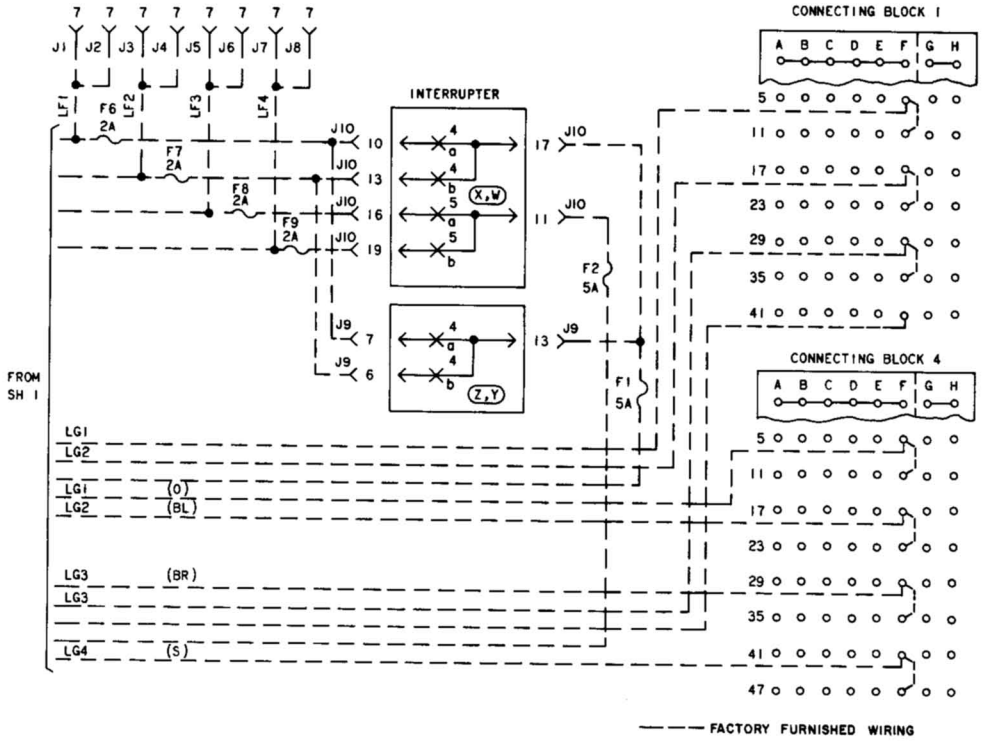

Fig. 84—Factory-Furnished Wiring for Lamp Flash Circuits (Sheet 2 of 2)

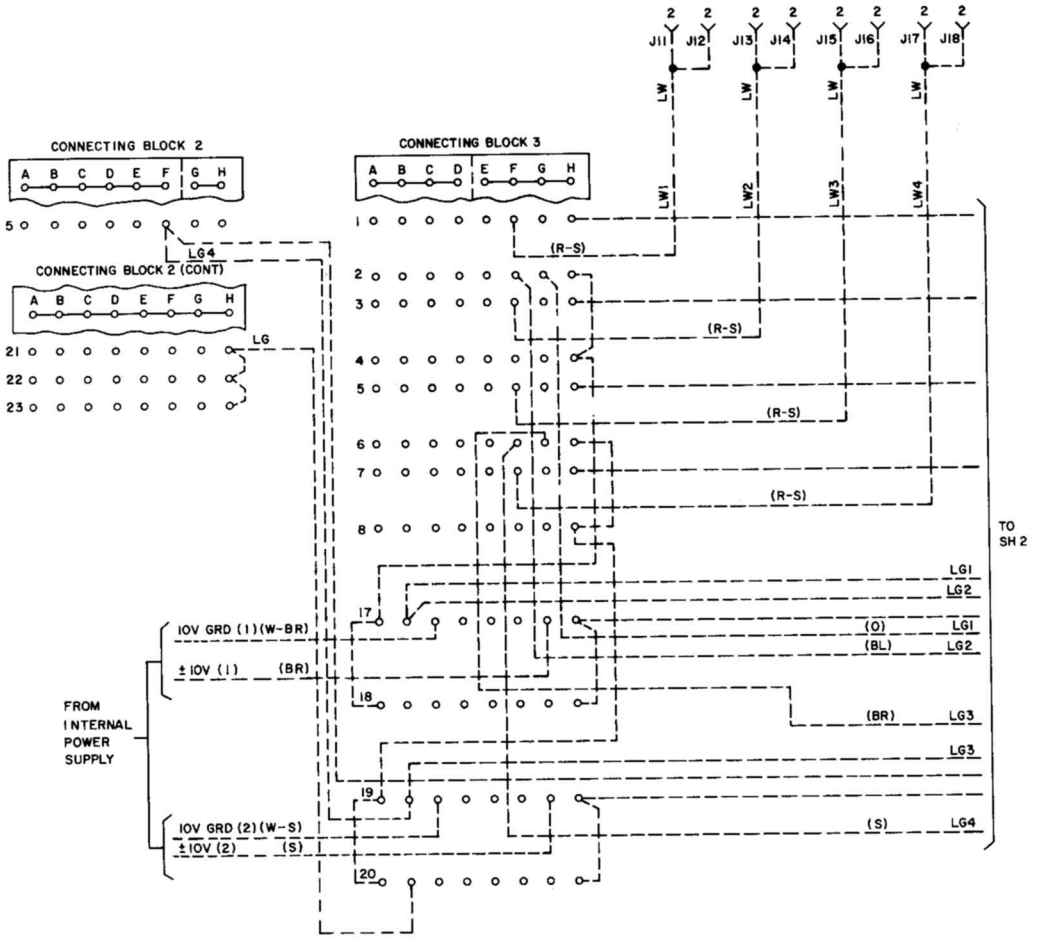

Fig. 85—Factory-Furnished Wiring for Lamp Wink Circuits (Sheet 1 of 2)

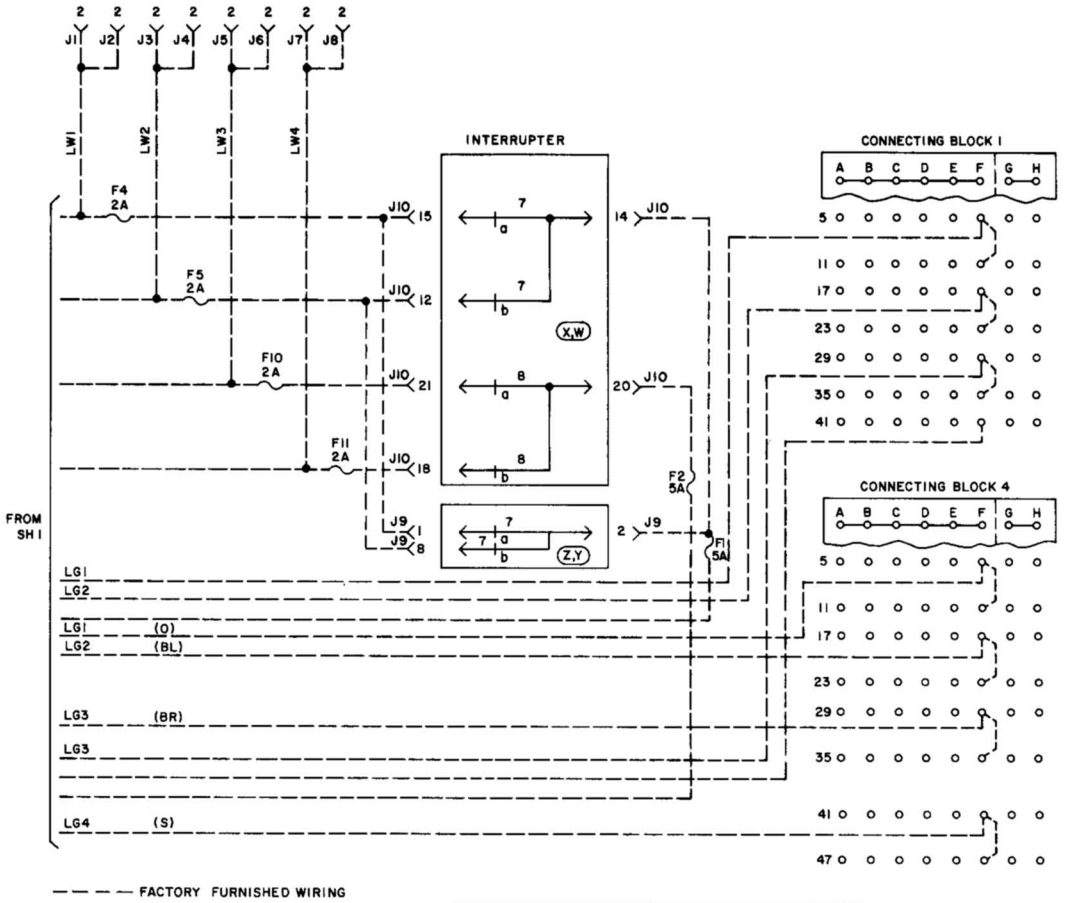

OPTION		LAMP LOAD	CONNECTING BLOCK NO. 3 STRAPS	
			PLACE	REMOVE
Z	KS-19175, L1 INTERRUPTER 10V AC MOTOR	1 TO 100 LAMPS	1G TO 5G 3G TO 7G 18D TO 19D	-
Y	KS-19385, L2 INTERRUPTER 24V DC MOTOR			
X	KS-15900, L1 INTERRUPTER 10V AC MOTOR	101 TO 200 LAMPS	-	1G TO 5G 3G TO 7G 18D TO 19D
W	KS-19384, L2 INTERRUPTER 24V DC MOTOR			

Fig. 85—Factory-Furnished Wiring for Lamp Wink Circuits (Sheet 2 of 2)

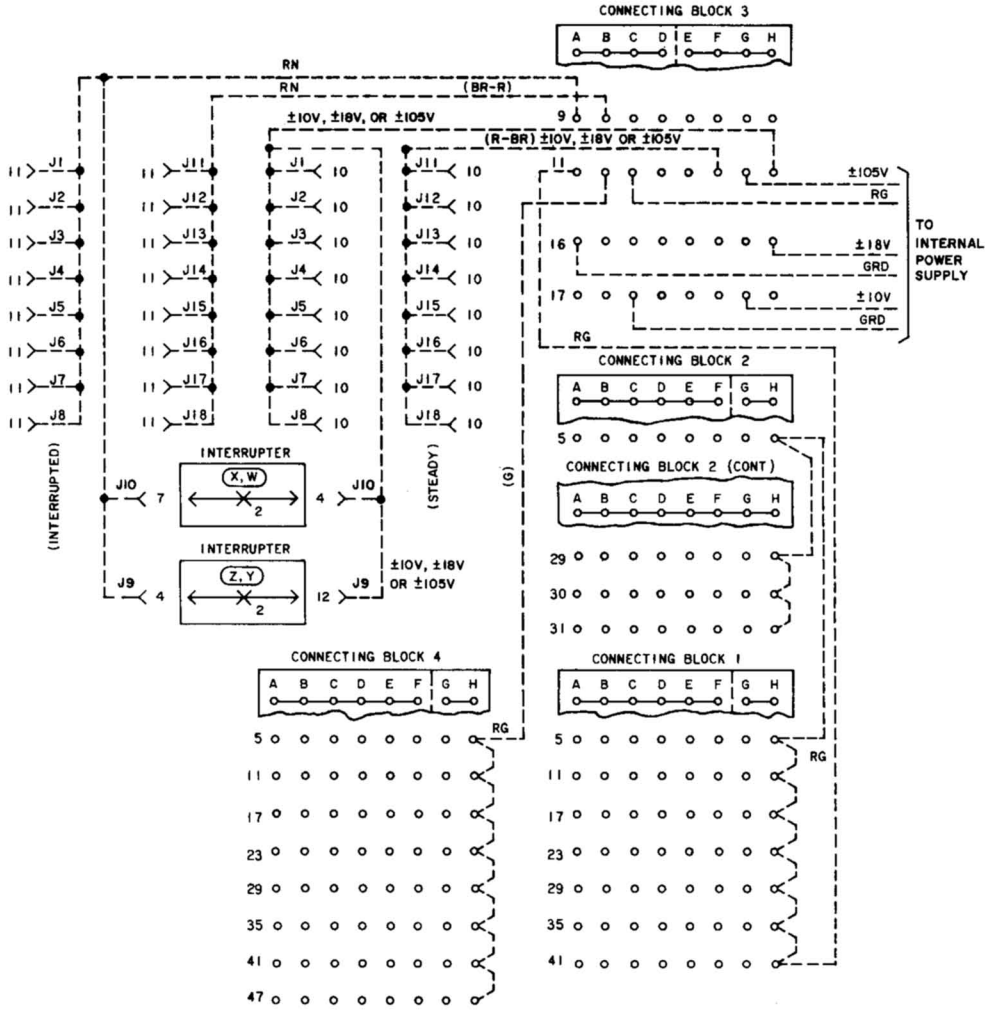

Fig. 86—Factory-Furnished Wiring for ±10 Volt, ±18 Volt, ±105 Volt, and RN Audible Signaling Circuits

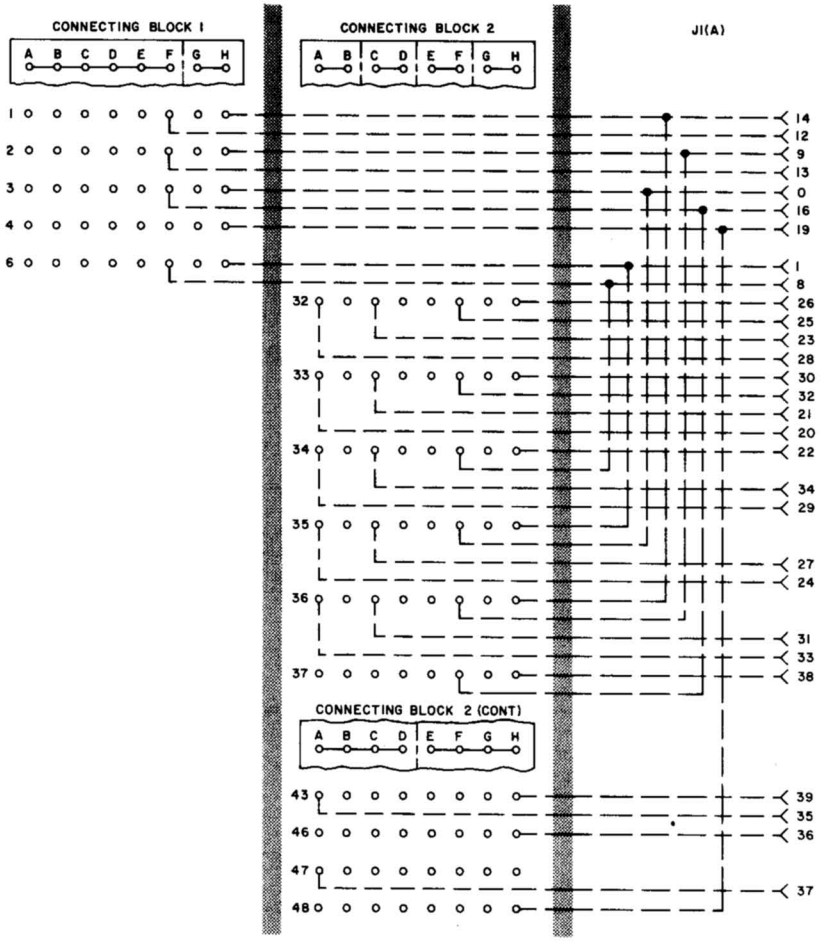

Fig. 87—Factory-Furnished Wiring for Jack 1

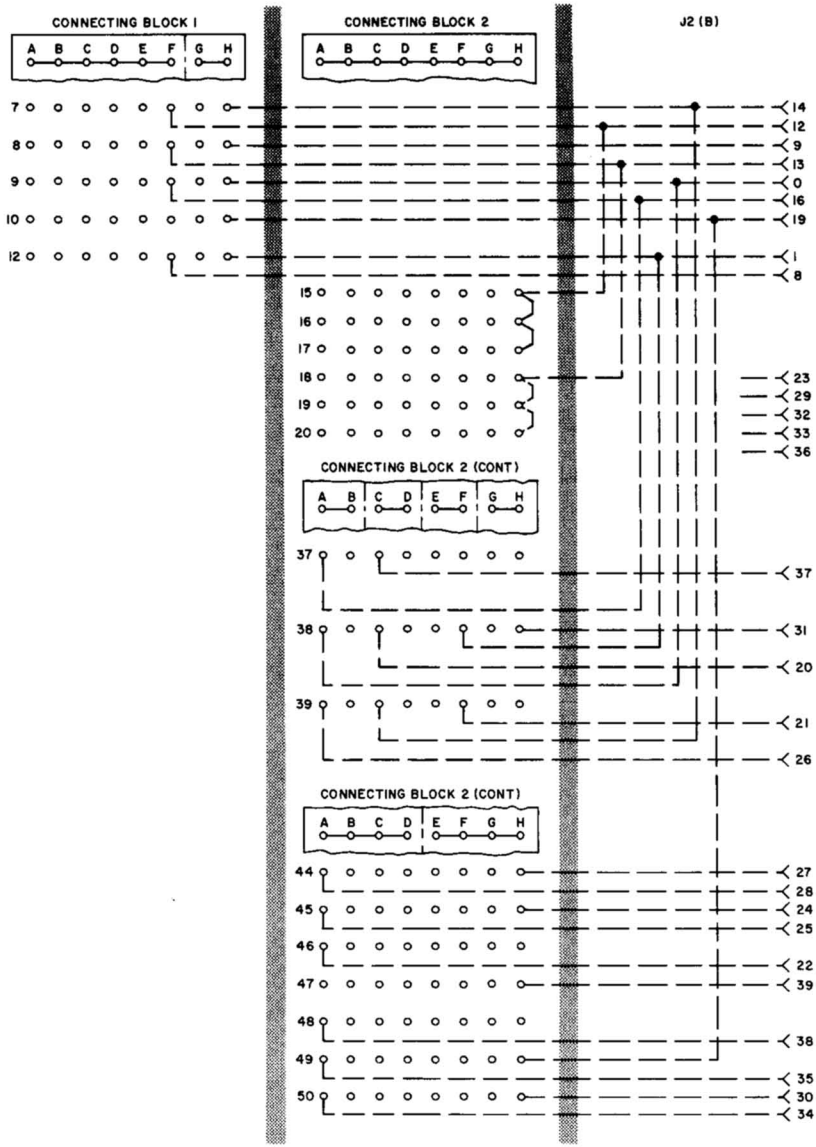

Fig. 88—Factory-Furnished Wiring for Jack 2

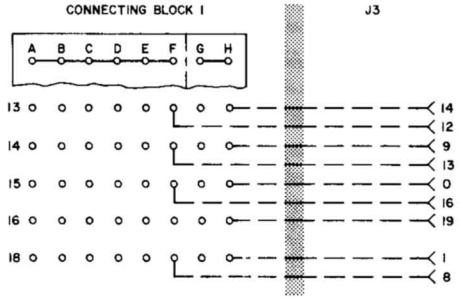

Fig. 89—Factory-Furnished Wiring for Jack 3

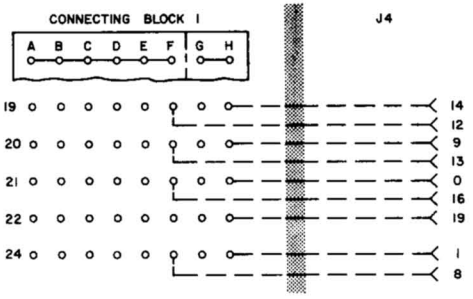

Fig. 90—Factory-Furnished Wiring for Jack 4

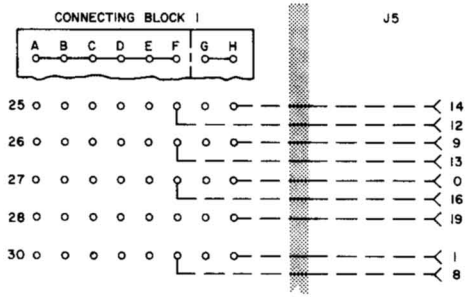

Fig. 91—Factory-Furnished Wiring for Jack 5

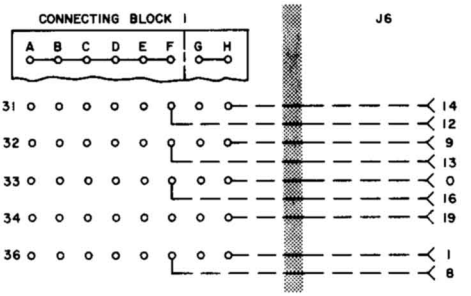

Fig. 92—Factory-Furnished Wiring for Jack 6

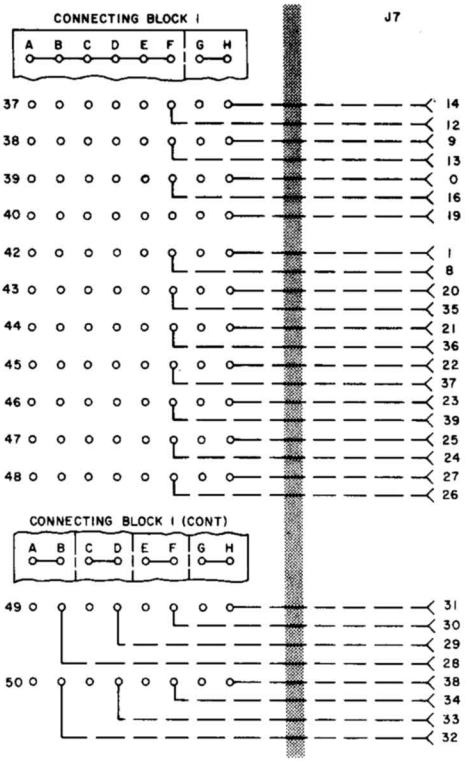

Fig. 93—Factory-Furnished Wiring for Jack 7

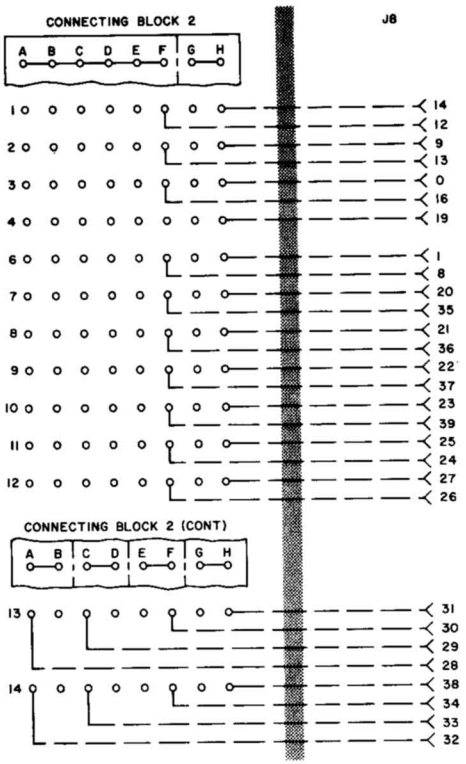

Fig. 94—Factory-Furnished Wiring for Jack 8

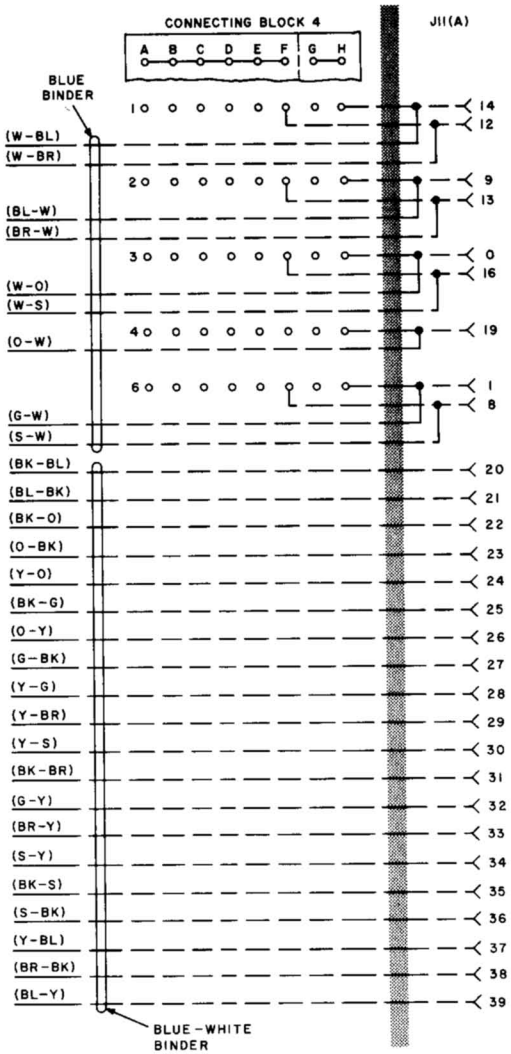

Fig. 95—Factory-Furnished Wiring for Jack 11

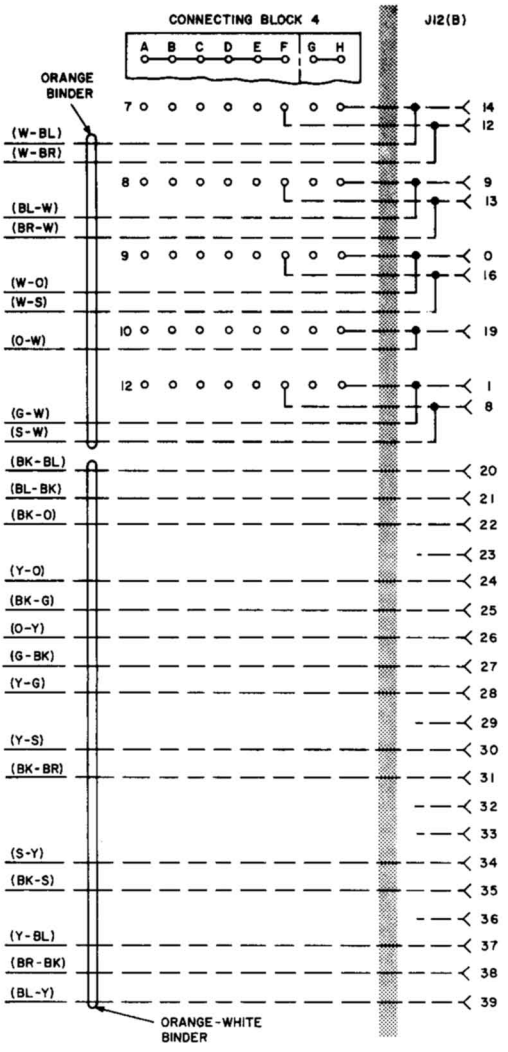

Fig. 96—Factory-Furnished Wiring for Jack 12

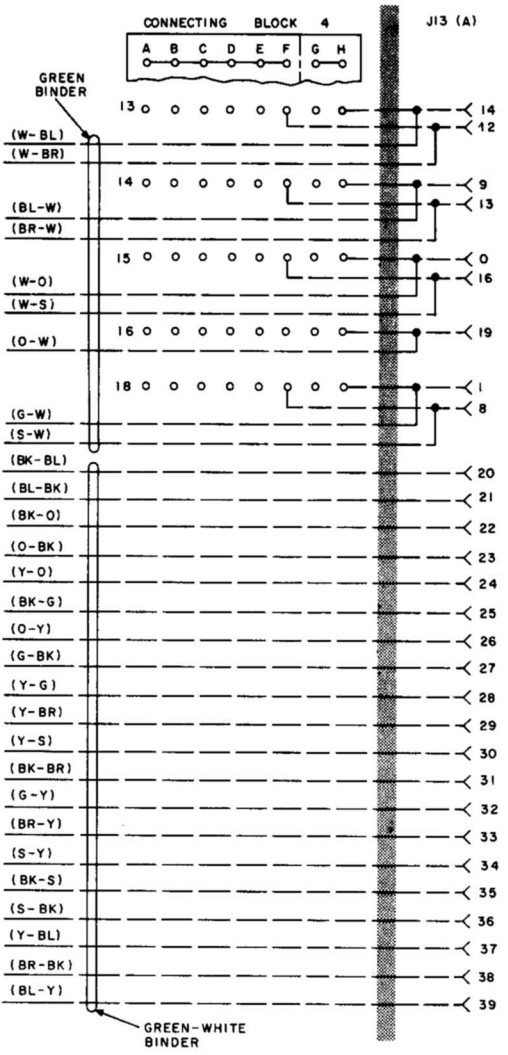

Fig. 97—Factory-Furnished Wiring for Jack 13

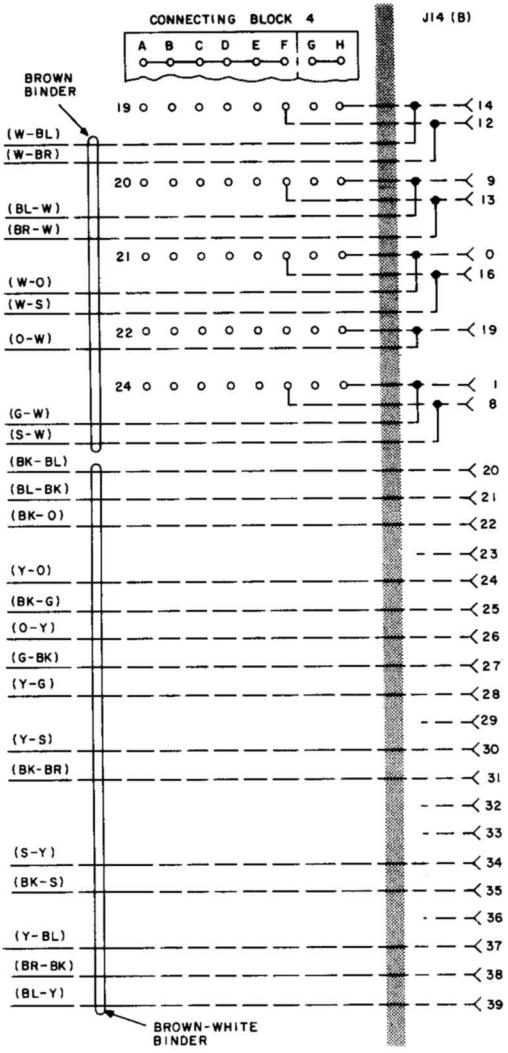

Fig. 98—Factory-Furnished Wiring for Jack 14

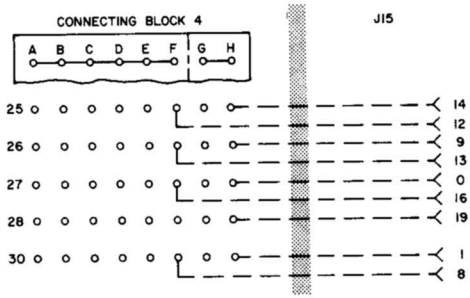

Fig. 99—Factory-Furnished Wiring for Jack 15

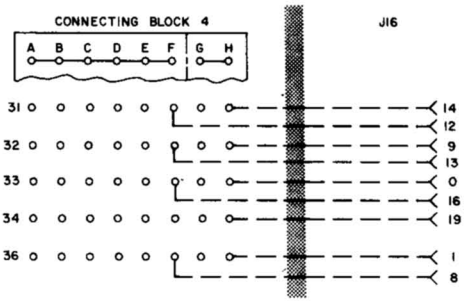

Fig. 100—Factory-Furnished Wiring for Jack 16

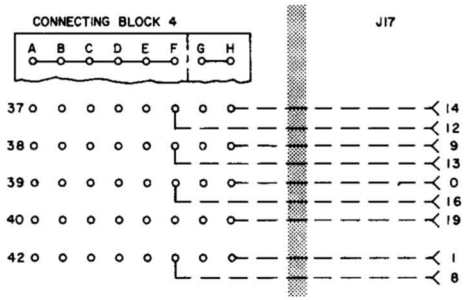

Fig. 101—Factory-Furnished Wiring for Jack 17

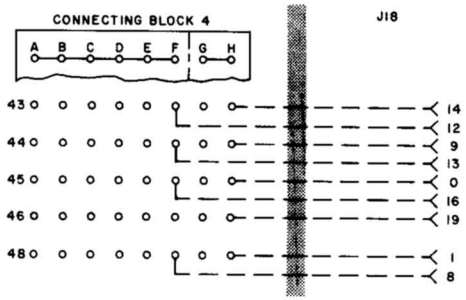

Fig. 102—Factory-Furnished Wiring for Jack 18

SERVICE

1A2 KEY TELEPHONE SYSTEM

KEY SERVICE UNITS

550- AND 551-TYPE

1. GENERAL

1.001 This addendum supplements Section 518-215-407, Issue 1. Place this pink sheet ahead of Page 1 of the section.

1.002 This addendum is reissued to add a ***Warning*** concerning use of proper buzzer voltages.

1.003 Issue 1 of this addendum was issued to:

(1) Add general information on interface requirements resulting from the Federal Communications Commission's (FCC) Registration Program

(2) Show the 400D and 400G KTUs rated MD and replaced by the 400H.

2. CHANGES TO SECTION

ISSUE 1 CHANGES

2.001 On Page 1, add a new paragraph 1.04 as follows:

1.04 Incoming central office (CO) lines to be installed in compliance with the FCC Registration Program must be routed through a standard network interface. Information on approved interfaces is contained in Section 461-604-105, entitled Connecting Blocks, 66M3-50R—Identification, Installation, and Maintenance.

2.002 On Page 1, add the following Note after "400-Type (CO/PBX Line Circuit)" in paragraph 2.01:

> ***Note:*** The 400H KTU is AT&TCo Standard; the 400G, 400D, and earlier KTUs are rated MD.

ISSUE 2 CHANGES

2.003 On Page 4, add the following at the end of paragraph 3.07:

> ***Warning: Do not use the 18-volt ac supply to operate KS-20419L1 buzzers supplied in key telephone sets. Doing so will result in damage to the buzzer. If KS-20419L1 buzzers are to be used, strap the RG and RB terminals to the LG and LB terminals, respectively (10-volt ac lamp power supply).***

NOTICE
Not for use or disclosure outside the
Bell System except under written agreement

SERVICE
1A2 KEY TELEPHONE SYSTEM
KEY SERVICE UNITS
550- AND 551-TYPE

1. GENERAL

1.01 This section provides identification, installation, connection, and maintenance information for the 550- and 551-type KSUs. The information pertaining to the 550A, 551A, 550B, and 551B KSUs was formerly contained in Sections 518-255-101 and 518-255-401. These units have been rated MD and replaced by the 550C and 551C KSUs, which are covered for the first time in this section. Information required for maintenance of existing installations of the MD-rated KSUs has been retained in this section.

1.02 Whenever this section is reissued, the reason for the reissue will be listed in this paragraph.

1.03 This issue of the section is based on the following drawings:

SD-69477-01, Issue 8A

CD-69477-01, Issue 4B

If this section is to be used with equipment or apparatus reflecting later issues of the drawings, reference should be made to the SD and the CD to determine the extent of the changes and the manner in which the section may be affected.

2. IDENTIFICATION

2.01 ***Purpose:*** A 550- or 551-type KSU provides a factory-wired 1A2 KTS package arranged to mount four of the following KTUs:

400-type (CO or PBX Line Circuit)

401A (Manual Intercom Line Circuit)

415A (Automatic, DC Signaling Tie Line Circuit)

467A (Low-Voltage Monitor Circuit).

2.02 ***Application***

- 1A2 KTS installations.

2.03 ***Ordering Guide***

(a) ***Basic Units (Fig. 1):***

- Unit, Service, Key—550C (for installations where suitable external source of required talk and signal voltages is available)
- Unit, Service, Key—551C (built-in power unit).

(b) ***Replaceable Components:***

- Interrupter, KS-19175, List 1—furnished with 550- and 551-type KSU (requires 10V ac motor supply)
- Unit, Power, J86738A, List 1 (MD)—furnished with 551A KSU (MD)
- Unit, Power, 28A1—furnished with 551B KSU (MD)
- Unit, Power, 28D1—furnished with 551C KSU
- Lamp, 51A
- Fuses, Bussman, MDL-1 (1 ampere, one per power unit)

NOTICE
Not for use or disclosure outside the
Bell System except under written agreement

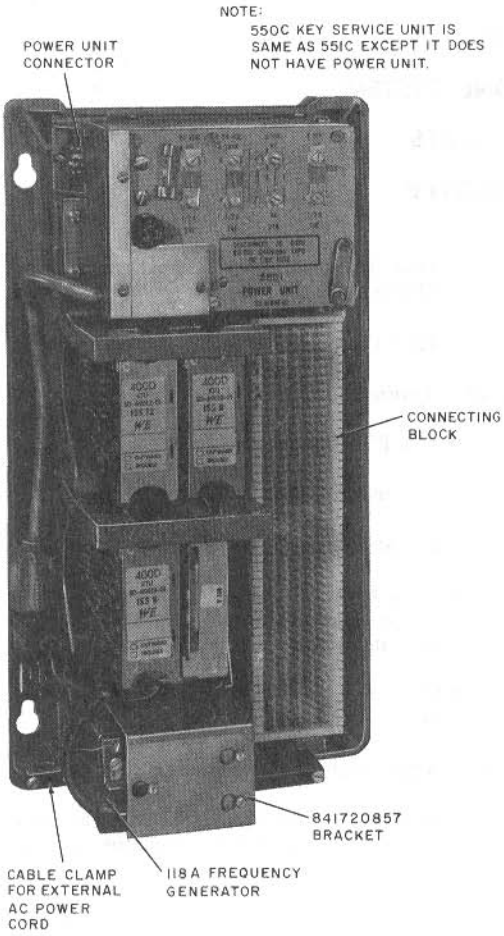

Fig. 1—551C KSU With Frequency Generator

- Fuses, 24E (1/2 ampere, three per power unit)
- Fuses, 24B (3 ampere, one per power unit).

(c) ***Replaceable (Optional) Components:***

- Interrupter, KS-19385, List 1 (MD) (requires 24V dc motor supply)
- Interrupter, KS-19385, List 2 (requires 24V dc motor supply)
- Generator, Frequency 118A—for use with 550B, 550C, 551B, and 551C KSUs; 105V ac ringing supply (supplied with three mounting screws)
- Bracket, Mounting, 841720857—for mounting 118A frequency generator on 550/551C KSU
- Kit of Parts, D-180699—for mounting 118A frequency generator on 550/551B KSU.

(d) ***Associated Apparatus (order separately):***

- Cord, Power, 834167652 (P-41W765), 1-1/2 feet*
- Cord, Power, 824013262 (P-40J326), 1-1/2 feet†
- Cord, Power, 834167660 (P-41W766), 2 feet*
- Cord, Power, 824013270 (P-40J327), 2 feet†
- Cord, Power, 834167678 (P-41W767), 4 feet*
- Cord, Power, 824013288 (P-40J328), 4 feet†
- Cord, Power, 834167686 (P-41W768), 6 feet*
- Cord, Power, 824013296 (P-40J329), 6 feet†
- Cord, Power, 824010995 (P-40J099), 12 feet†
- Plate, Adapter, 814862611 (P-48F261) ‡

*For 551A KSU (MD).
†For 551B KSU (MD) or 551C.
‡ For mounting two single width or one double width 1A Key Telephone System angle bracket type KTUs in 550-type KSU.

Order required combination of up to four of the following KTUs, subject to specified limitations:

- Unit, Telephone, Key, 400D (maximum of four)
- Unit, Telephone, Key, 401A (maximum of four)
- Unit, Telephone, Key, 415A (maximum of three)

- Unit, Telephone, Key, 467A (maximum of one)

2.04 ***Design Features***

- 550-type KSUs do not have internal power units, while 551 types are factory-equipped with plug-in power units:

  551C—28D1 Power Unit

  551B (MD)—28A1 Power Unit

  551A (MD)—J86738A, List 1 Power Unit (MD)

- The basic KSU assembly contains four jacks for 400-series KTUs, two separate jacks for a plug-in KS interrupter and a plug-in power unit, and a factory-wired connecting block with "quick-clip" terminals.

- All external connections are made on front of connecting block.

- The 10-volt ac operated KS-19175, List 1 interrupter furnished with each KSU provides lamp flash, wink, and audible signal feature interruptions. It is a plug-in unit locked into place by a captive screw.

- A 24-volt dc operated KS-19385, List 1 (MD) or List 2 interrupter can be substituted for the one furnished with the KSU at locations where only 24-volt dc power is available.

- Intended for vertical mounting on a wall or other suitable surface.

- Protective front and back covers provided.

- 550C and 551C have line status lamps which display the same signals as the line lamps at associated stations.

- 550C and 551C are 17.18 inches high, 9.7 inches wide, and 7.12 inches deep.

- 550B/551B (MD) and 550C/551C can be equipped with a 118A frequency generator which provides power for operating ringers at associated stations. Earlier type KSUs must be connected to an external ringing supply.

- Common audible signaling can be provided by appropriate strapping on the connecting block.

3. INSTALLATION AND CONNECTIONS

3.01 The information in 3.02 through 3.17 applies specifically to the 550C and 551C KSUs, and also to the 550A, 551A, 550B, and 551B KSUs (all MD), unless otherwise noted. Most new installations will involve the "C" KSUs, but the MD units will be encountered in existing installations. For methods of strapping and terminating wire and cable, refer to Section 461-604-100. Cables and wire must be brought into the 550C and 551C KSUs from the bottom. Clamps are provided for retaining the power, line, and station cables. Dress wires along the sides of the connecting block. In the "A" and "B" KSUs, cable and wire may enter from top or bottom.

INSTALLATION

3.02 ***Mounting:*** Mount the KSU on a clean, firm, dry, vertical surface where it is easily accessible for service (mounting hardware to be obtained locally depending on mounting surface). If the KSU has a built-in power unit or if it is to be equipped with a 118A frequency generator, it must be located within cord length of a grounded 117V 60-Hz power outlet provided by the customer (see ***Ordering Guide*** for cord lengths). The outlet should be separately fused and not under the control of a switch. A KSU without built-in power unit should be mounted as close as possible to the separate telephone company power source.

> ***Warning: Do not connect the KSU to external power until all other wiring is complete and all KTUs are installed.***

3.03 ***External AC Power Cord:*** An external ac power cord is required with all 551-type KSUs and with any KSU equipped with a frequency generator.

(a) ***550/551C KSUs:*** Open the cable clamp in the lower left corner of the KSU and insert the receptacle end of the external power cord into the trough; secure the cord with the clamp.

(b) ***551B KSU (MD) Only:*** The 551B KSU is shipped with its power unit cord carried through an insulating grommet in the bottom of the KSU case. To install an external power cord:

(1) Compress the grommet to release it from the case.

(2) Remove the grommet from the internal power cord.

(3) Insert the receptacle end of the external power cord through the cutout in the housing where the grommet was removed.

(4) Place the grommet around the external power cord.

(5) Seat the grommet in the cutout, again from inside the case.

(6) Connect the external power cord to the power unit cord.



Inspect existing installations of 551B KSUs for improper installation of grommets and power cords (ie, grommet around power unit cord). Correct where necessary.

(c) ***551A KSU (MD):*** Connect the external power cord to the power unit cord through the cutout in the bottom of the KSU case.

3.04 ***Frequency Generator:*** Install the 118A frequency generator on the 550/551C KSU as described in (a) or on the 550/551B as described in (b). Connect as described in 3.07.

(a) Attach the generator to the mounting bracket (841720857) with the three screws supplied (Fig. 1). Then snap the pins of the bracket arms into the holes in the backboard flanges of the KSU. Let the generator rest against the front of the interrupter with its power cord to the left. Connect the feed-through type plug to the external ac power cord and, if the KSU is a 551C, to the power unit cord.

(b) To mount a 118A frequency generator on a 550/551B KSU, first install kit of parts D-180699. Remove the cable clamp provided with the KSU and replace it with the one in the kit. Mount the bracket on the door of the KSU as shown in Fig. 2. Attach the frequency generator to the bracket with the three screws supplied with the generator. Connect the feed-through type plug to the external ac power cord and, if the KSU is a 551B, to the power unit cord (see 3.03[b] for instructions on positioning the grommet).

CONNECTIONS

3.05 Table A provides a key to the connection diagrams in this section for the various models of the 550/551 KSUs.

3.06 ***Internal Power:*** The 551-type KSUs have built-in, factory-wired power units, and normally require no internal power wiring by the installer unless 105-volt ac ringing voltage is required (see 3.07 for details). KSUs of the 550-type must be wired to a suitable external power supply for all operating voltages. Make all external power lead connections to the terminals in the D or E columns on the front of the connecting block.



If an external power source is to be used, be sure that it can supply the minimum 20 volts dc signal battery required by 400-series KTUs. If it cannot, convert the KSU to a 551-type by installing an appropriate power unit (see Ordering Guide).

3.07 ***Audible Signaling Voltage:*** Audible signaling can be provided at the stations associated with the KSU on either the ringer or the buzzer at each telephone set. Ringer voltage must be supplied from a separate 105-volt ac source, such as the 118A frequency generator, connected to the RG and RB terminals on the front of the connecting block. Buzzer voltage can be derived from the 18-volt ac audible signal supply available at the internal or external power unit. Connect buzzer voltage by installing straps from terminals G± and S± to RG and RB, respectively.

3.08 ***Common Audible:*** This feature allows multiple stations to receive incoming call signals from the same line and a single station to receive signaling from several lines. Common audible signaling is provided by strapping together the appropriate R1 leads at the connecting block and wiring signaling voltage to the RG and RB terminals. Auxiliary control of common audible

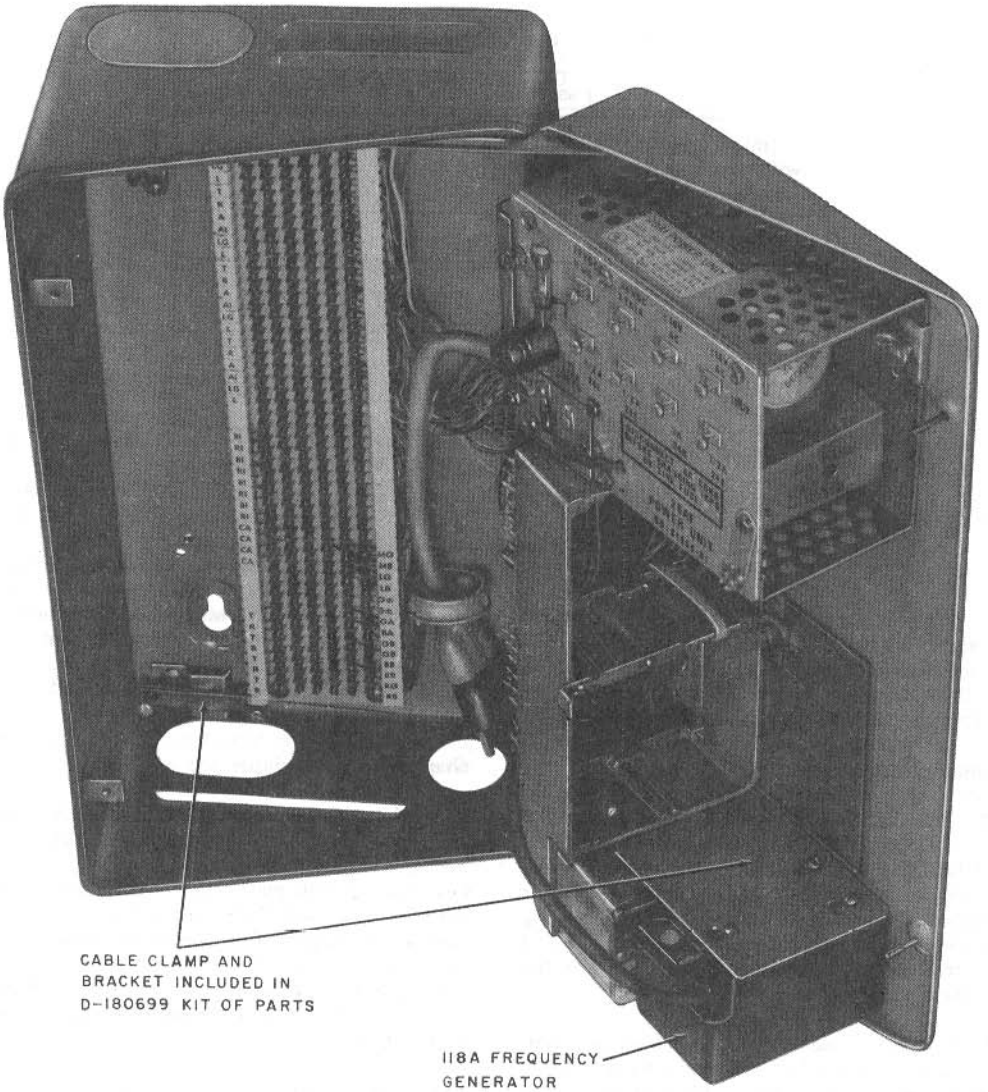

Fig. 2—551B (MD) KSU With 118A Frequency Generator Installed

signaling is possible through the use of a separately mounted 227-type KTU wired to the connecting block.

3.09 ***Line Connections:*** Connect the incoming CO/PBX lines to the T-R terminals (43 to 50) in the A column of the connecting block. The KSU can accommodate a maximum of four lines.

3.10 ***Station Connections:*** Terminate the station cables on the connecting block, the first cable on column A, the second on column B,

TABLE A

CONNECTION DIAGRAM INDEX

	550/551C	550/551B(MD)	550/551A(MD)
Terminal Layout with Station and Line Connections	Fig. 3	Fig. 4	Fig. 4
Power Connections	Fig. 5	Fig. 6	Fig. 7
Common Audible Connections	Fig. 8	Fig. 10	Fig. 10
Common Audible Auxiliary Control Connections	Fig. 9	Fig. 11	Fig. 11
Manual Intercom Connections	See 3.11	See 3.13	See 3.13
Lead Designations	Fig. 12	Fig. 12	Fig. 12

etc. A maximum of five stations can be wired directly to the KSU. If more stations are required, use loop-through terminations or provide distribution facilities. Connect the ringer or buzzer leads of the station cables to the B1-R1 terminals.

Manual Intercom

3.11 This feature is provided by installing a 401A KTU in the KSU. In early production models of the 550/551C KSUs, only jack J4 was factory-wired with the talk (A) battery and ground required for operation of the 401A. Later models (indicated by an asterisk [*] stamped after the code on the KSU) are wired to accept a 401A KTU in any of the four jacks.

3.12 The early models can be modified to accept a 401A in another jack by disconnecting the green wires from terminals 3 (A grd) and 18 (A bat) of J4 on the back of the KSU, and transferring them to the same terminals of the desired jack.

3.13 On the 550/551A and B KSUs (MD), the talk battery terminals are factory-wired at each KTU jack, but only the BR-W/W-BR pair on J4 is wired back to the talk battery terminals on the connecting block. The pairs from the other jacks are dead dressed. To use a jack other than J4 for the manual intercom KTU, disconnect the BR-W/W-BR pair from the back of the connecting block, and connect the pair from the other jack as shown in Table B. Insulate and store the disconnected pair.

Grounding

3.14 Any installation of the 550/551-type KSU should be grounded and protected in accordance with the requirements in Section 518-010-105. The frame of the KSU power unit is grounded through the third, or "green," wire of its power cord. The local or circuit ground of the power unit, which is the positive side of the dc output, should be connected to the same ground as the system protector. ***Do not connect circuit ground and frame ground together.***

3.15 The 550/551C KSU has an external grounding terminal, labeled LOC GRD, on the front of the backboard above the interrupter. It is wired internally to the power unit ground circuit at the G± terminal of the connecting block. Connect this terminal to protector ground with a 14-gauge wire brought through one of the cable clamps below the connecting block. On 550/551A and B KSUs (MD), a multiple-post grounding terminal is located on the top of the connecting block.

TABLE B

MANUAL INTERCOM WIRING
550/551A AND B (MD) KSUs

CONNECT TALK BATTERY PAIR TO CONN BLOCK		TALK BATTERY PAIR			
		J1	J2	J3	J4*
550/551B	GA (F43)	W-BL	W-O	W-G	W-BR
	BA (F44)	BL-W	O-W	G-W	BR-W
550/551A	GA (F45)	W-BL	W-O	W-G	W-BR
	BA (F46)	BL-W	O-W	G-W	BR-W

* Factory-wired.

3.16 ***Connecting of KTUs:*** Insert each KTU into its receptacle with a gentle, vertical rocking motion until it is firmly seated. Then lower the locking bar to hold the KTU in place.



Do not drive more than 20 line lamps from one 400-type KTU or more than 50 lamps from one interrupter contact.

3.17 ***External Power Connections:*** After all internal connections have been made, the KSU properly grounded, and the KTUs installed, connect the KSU to the required external power source.

4. MAINTENANCE

4.01 Maintenance activity on the 550/551-type KSUs should be limited to the following:

- Clearing wiring troubles
- Fuse replacement
- Lamp replacement
- Replacement of defective KTUs, power units, interrupters, and frequency generators.

Note: Be careful when inserting or removing plug-in type KTUs to avoid damage to the printed wiring and other circuit components. Blister packs should be used when returning KTUs.

4.02 ***Interrupter Replacement:*** When replacing the KS-19175 10-volt interrupter with a KS-19385 24-volt type, either at initial installation or as a repair procedure, it is necessary to change the connecting block wiring (see Fig. 5, 6, and 7). Remove the strap which supplies 10V ac to the motor lead (Fig. 5), and connect whatever wiring is required to supply 24V dc from internal or external supplies. The interrupter is removed by loosening the captive screw in the right center of the unit, and pulling it out of the plug.

4.03 ***Wire-Wrap Connections:*** The KS-16492, List 2 unwrapping tool should be used when removing solderless wrapped connections on line jack contacts, if required, for circuit testing. The 635B tool may be used to reterminate a wire on a wrapping terminal, but wires must be soldered when reconnected to ensure circuit reliability.

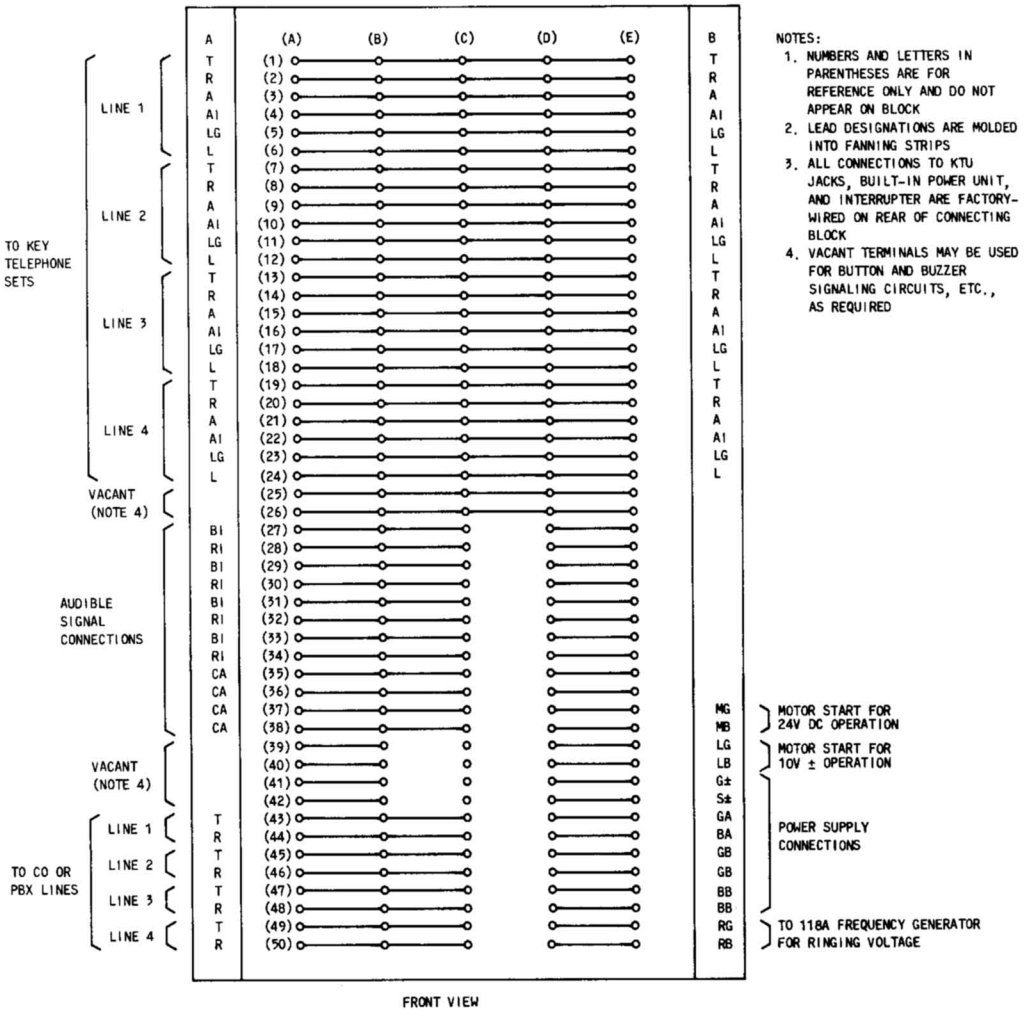

Fig. 3—Terminal Layout of Connecting Block on 550/551C KSU Showing Installer Connections for Incoming Lines and Stations

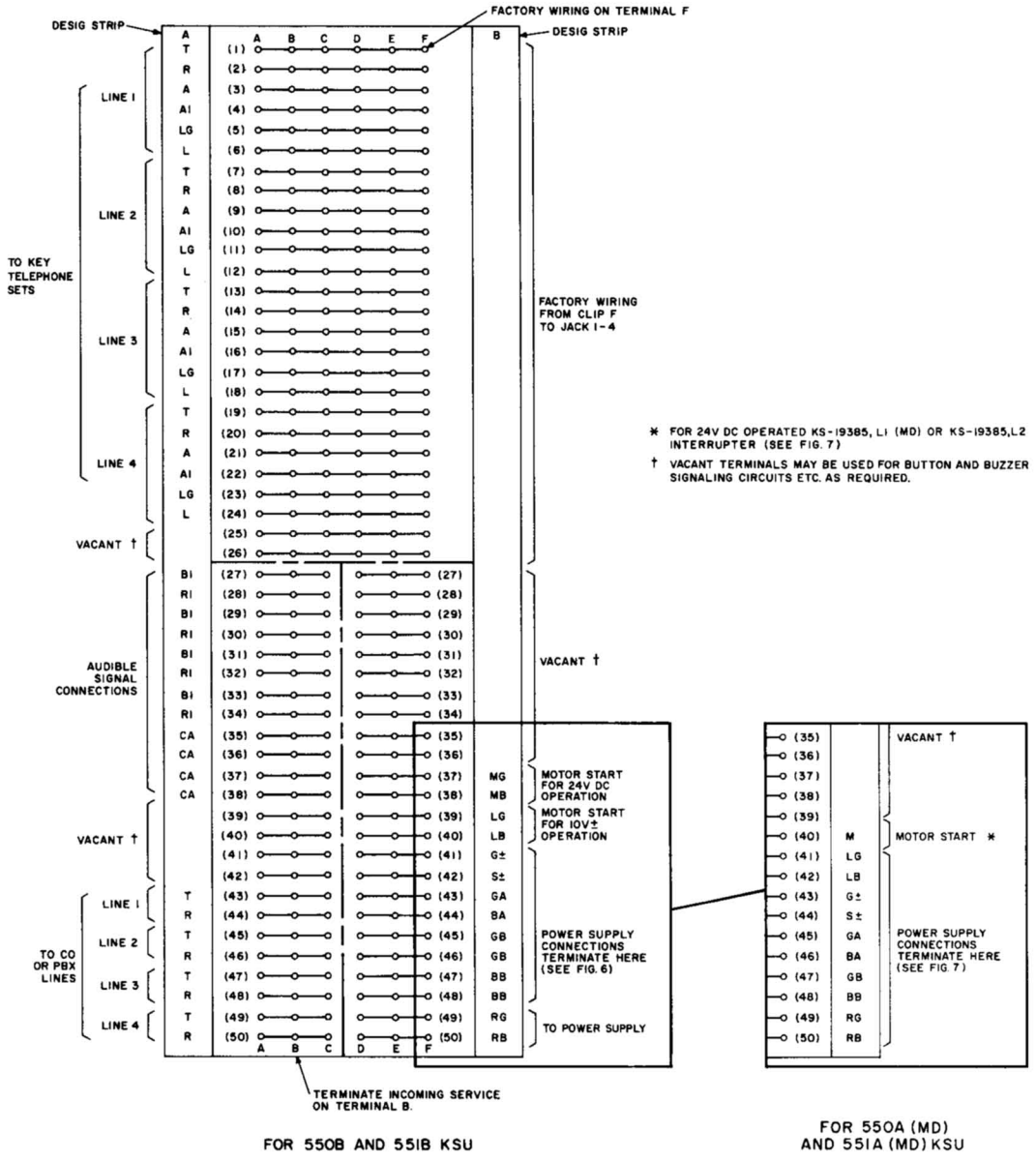

Fig. 4—Terminal Layout of Connecting Block on 550/551A and B (MD) KSU Showing Installer Connections for Incoming Lines and Stations

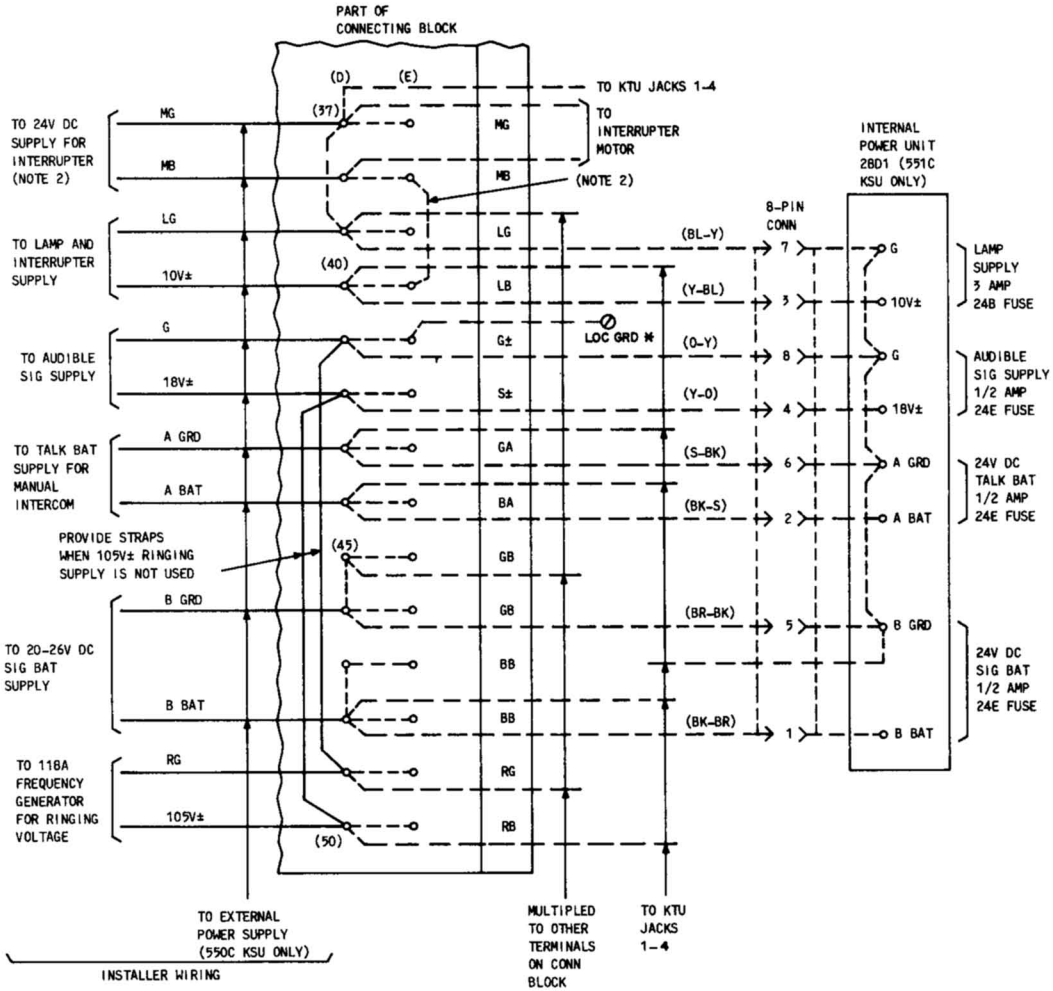

NOTES:

1. DASHED LINES REPRESENT FACTORY WIRING, SOLID LINES REPRESENT WIRES TO BE RUN BY INSTALLER AS REQUIRED
2. WHEN KS-19385 L2 24V DC INTERRUPTER IS USED, REMOVE FACTORY STRAP BETWEEN 38E AND 40E ON FRONT OF BLOCK: IF KSU IS 551C, PUT STRAP BETWEEN 38E AND 47E. IF KSU IS 550C, CONNECT EXTERNAL SUPPLY TO 37D AND 38D AS SHOWN ABOVE
3. NUMBERS AND LETTERS IN PARENTHESES ARE FOR REFERENCE ONLY AND DO NOT APPEAR ON BLOCK

* LOCATED ON FRONT PANEL ABOVE INTERRUPTER.

Fig. 5—Power Supply Connections for 550/551C KSU

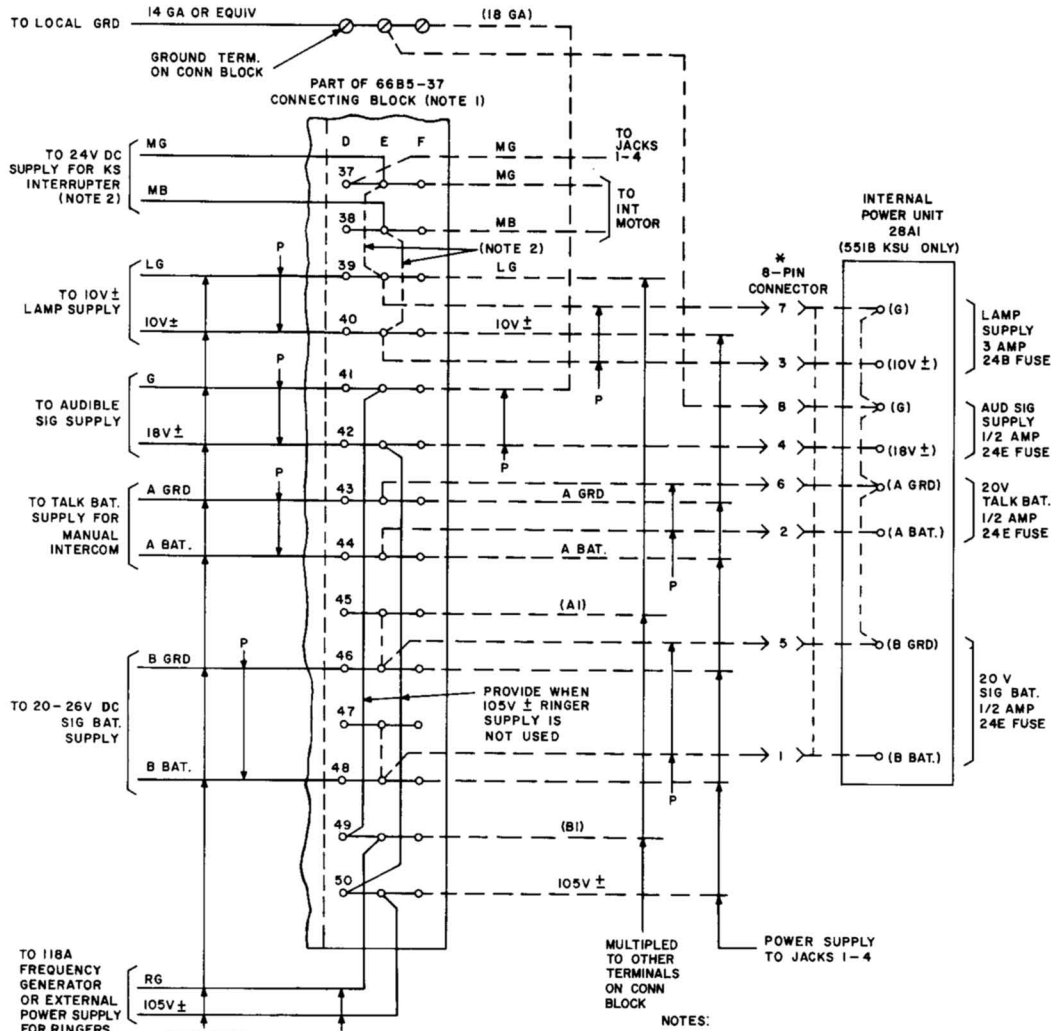

MOTOR SUPPLY	KS-19175, L1	KS-19385, L1 (MD)	KS-19385, L2
10V±	38E (STRAPPED TO 40E)	——	——
GRD	37E (STRAPPED TO 39E)	——	——
24V DC	——	38E (STRAPPED TO 47D)	38E (STRAPPED TO 47F)
GRD	——	37E (STRAPPED TO 45D)	37E (STRAPPED TO 39E)

NOTES:

1. DASHED LINES REPRESENT FACTORY WIRING. SOLID LINES REPRESENT WIRES TO BE RUN AS REQUIRED.
2. REMOVE FACTORY STRAPS BETWEEN 37E AND 39E AND 38E AND 40E FOR 24V DC KS INTERRUPTER OPERATION. THE POWER SUPPLY CONNECTIONS FOR EITHER INTERRUPTER MOTOR ARE SHOWN AT LEFT.

* 8-PIN CONNECTOR AND WIRING TO CONNECTING BLOCK FURNISHED IN BOTH 550B AND 551B KSU.

Fig. 6—Power Supply Connections for 550/551B (MD) KSU

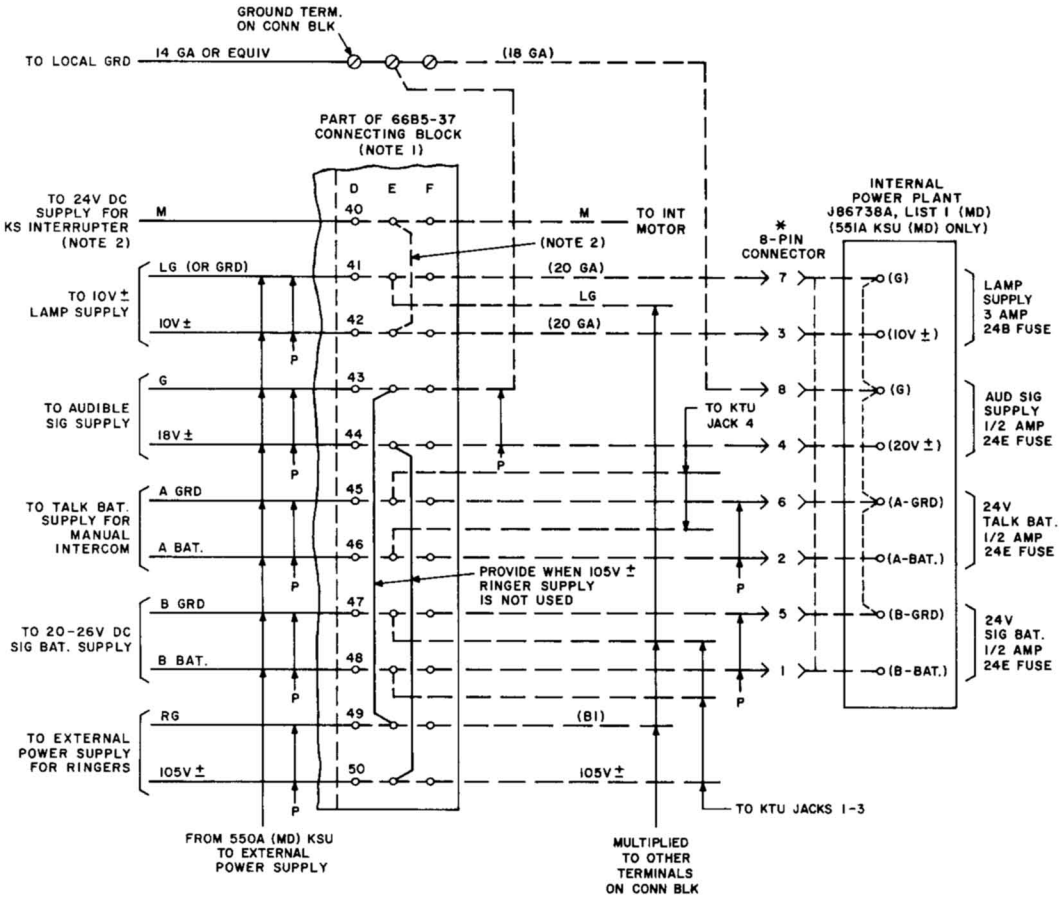

NOTES:

1. DASHED LINES REPRESENT FACTORY WIRING. SOLID LINES REPRESENT WIRES TO BE RUN AS REQUIRED.
2. REMOVE FACTORY STRAP BETWEEN 40E AND 42E FOR 24V DC KS INTERRUPTER OPERATION. THE POWER SUPPLY CONNECTIONS FOR EITHER INTERRUPTER MOTOR ARE SHOWN AT RIGHT.

* 8-PIN CONNECTOR AND WIRING TO CONNECTING BLOCK FURNISHED IN BOTH 550A (MD) AND 551A (MD) KSU.

MOTOR SUPPLY	KS-19175, L1	KS-19385, L1 (MD)	KS-19385, L2
10V ±	42E (STRAPPED TO 40E)	—	—
GRD	41E	—	—
24V DC	—	48D	48F (STRAPPED TO 40F)
GRD	—	47F (STRAPPED TO 40F)	47D

Fig. 7—Power Supply Connections for 550/551A (MD) KSU

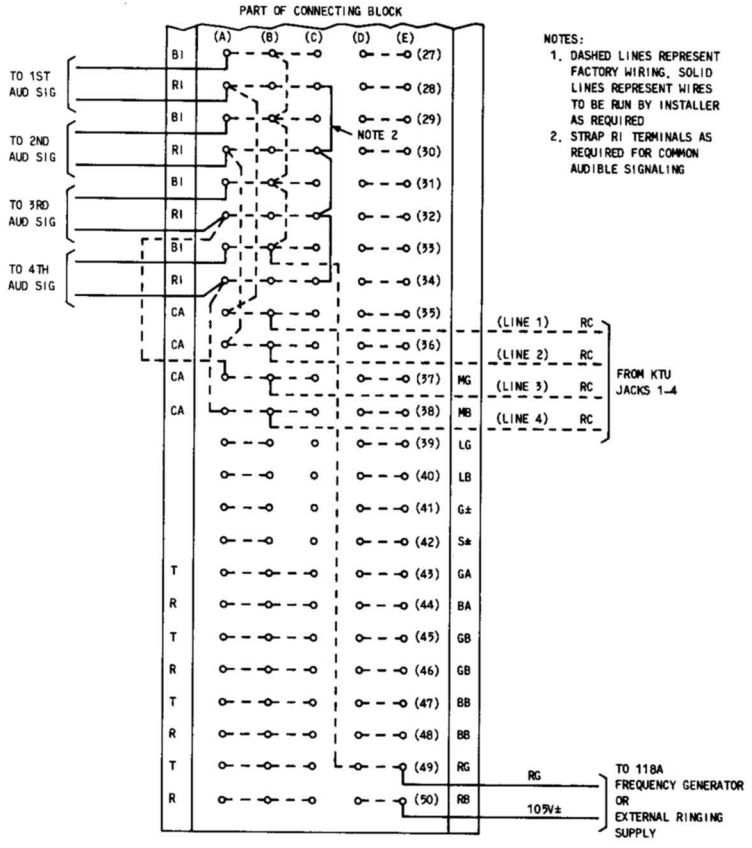

Fig. 8—Connections for Individual or Common Audible Signaling on 550/551C KSU

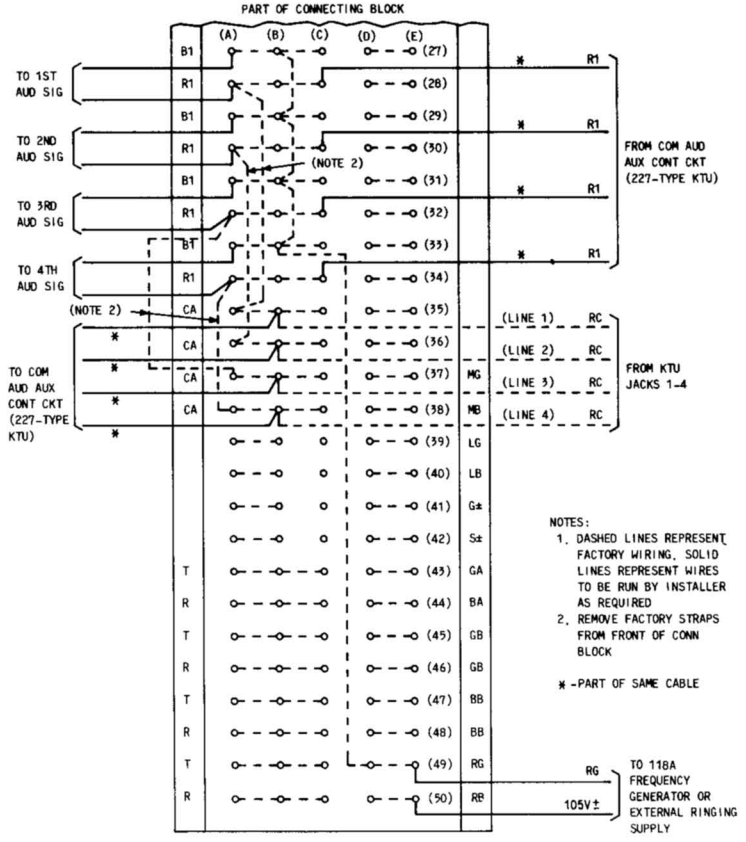

Fig. 9—Connections for Common Audible Auxiliary Control on 550/551C KSU

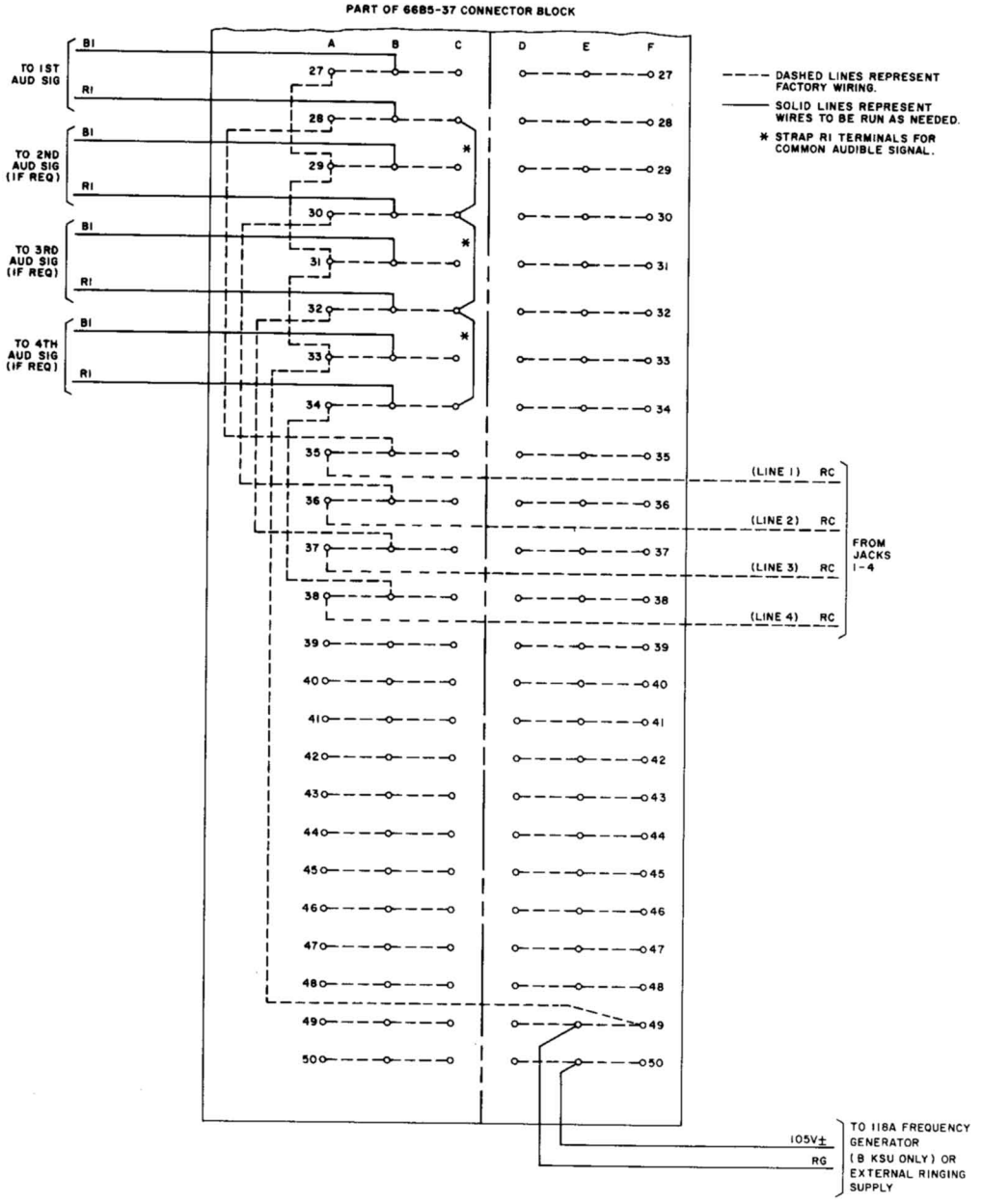

Fig. 10—Connections for Individual or Common Audible Signaling on 550/551A and B (MD) KSU

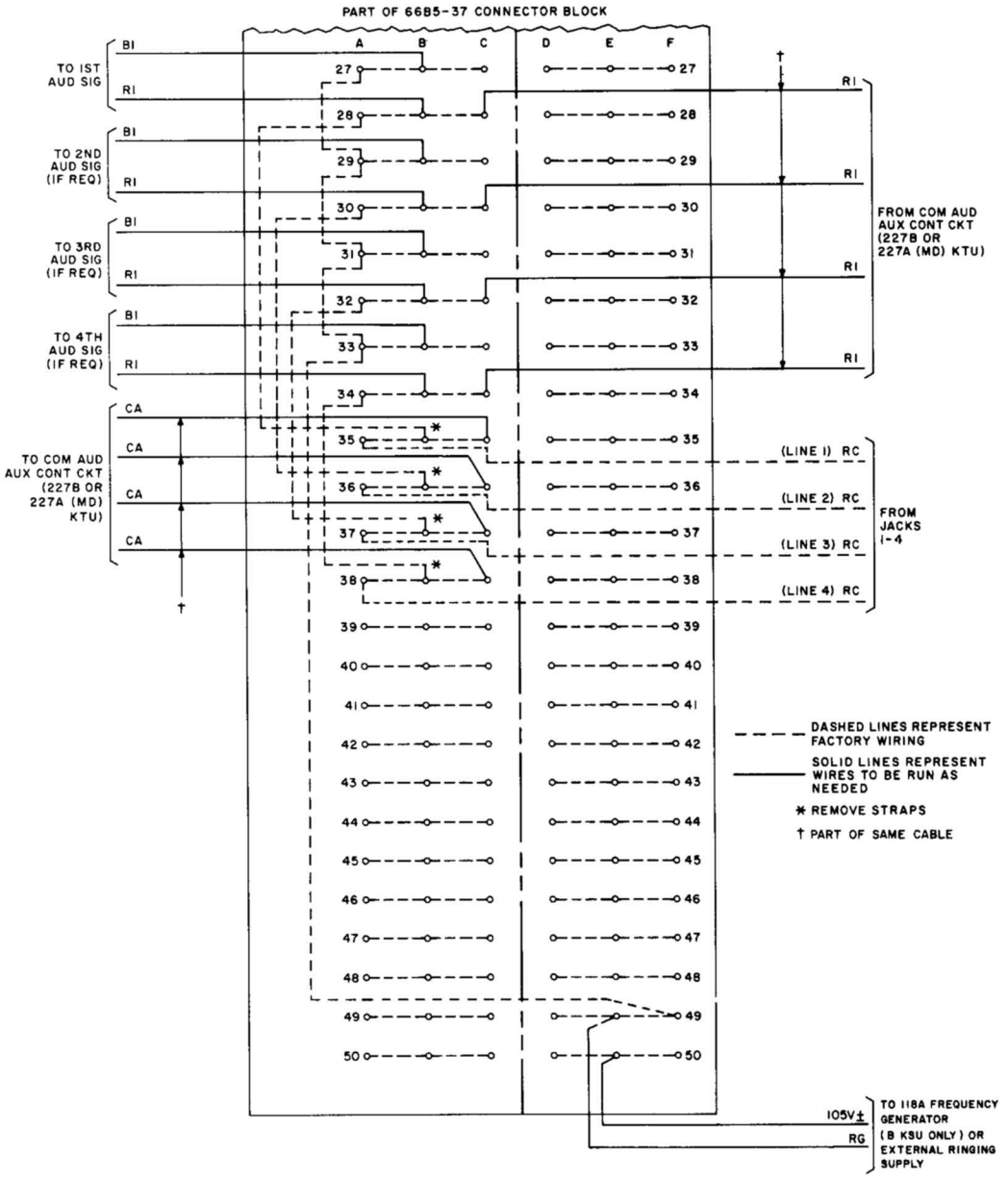

Fig. 11—Connections for Common Audible Auxiliary Control on 550/551A and B (MD) KSU

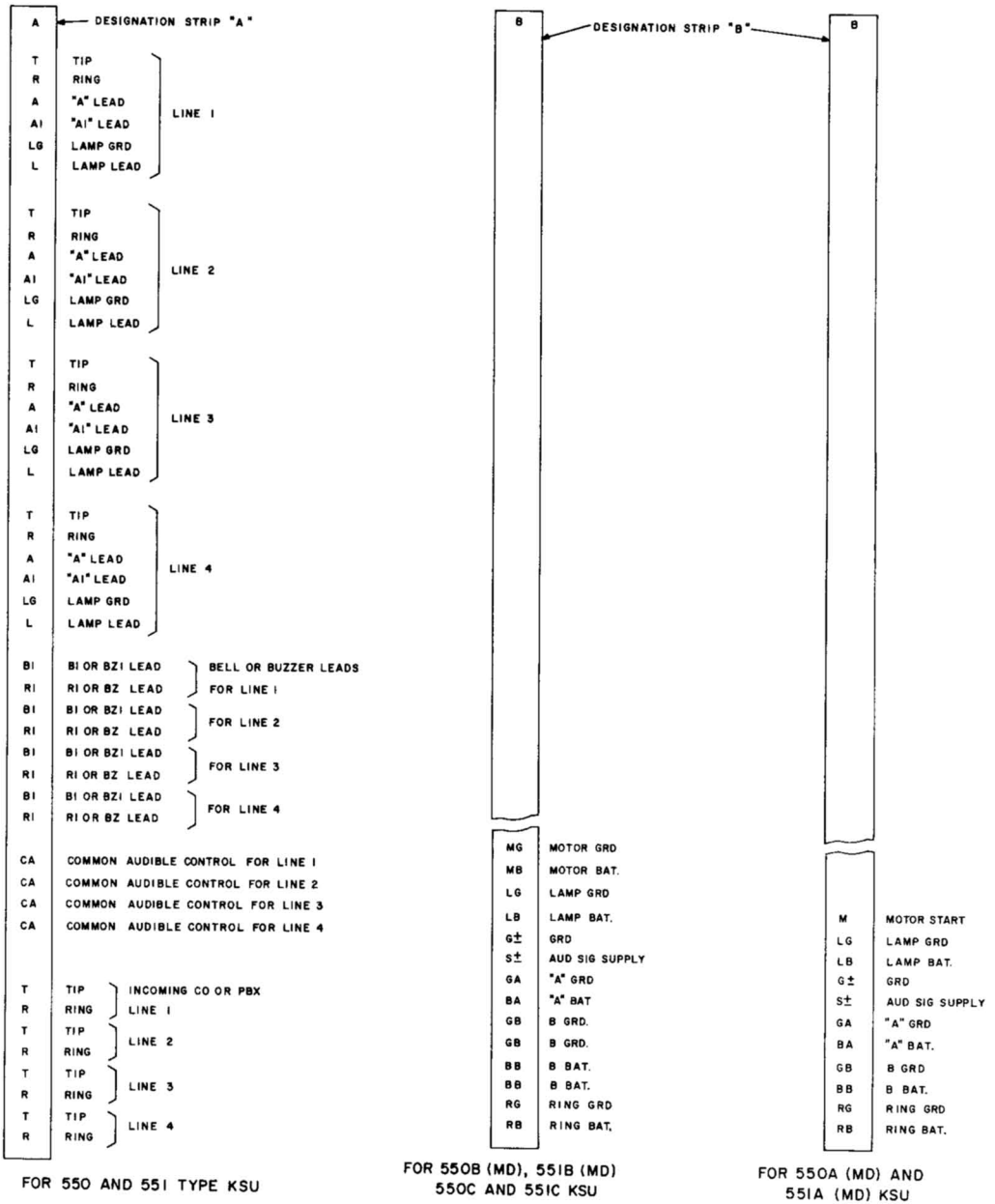

Fig. 12—Lead Designations on 550- and 551-Type KSUs

SERVICE

583- AND 584-TYPE PANELS

1A2 KEY TELEPHONE SYSTEM

1. GENERAL

1.001 This addendum supplements Section 518-215-410, Issue 8. Place this pink sheet ahead of Page 1 of the section.

1.002 This addendum is issued to provide additional information related to the Federal Communications Commission's (FCC) Registration Program.

2. CHANGES TO SECTION

2.001 On Page 1, revise paragraph 1.06 to read as follows:

1.06 The 583- and 584-type panels have not been registered with the FCC and new panels will not be manufactured after January 1, 1980. Also after January 1, 1980, the 401B and 471C key telephone units (KTUs) must be used when providing their related services. Previously connected or Class C units may be used for additions and maintenance at grandfathered installations for the life of the units, provided they are not modified. Class C stock may also be used in new installations after January 1, 1980.

NOTICE
Not for use or disclosure outside the
Bell System except under written agreement

Printed in U.S.A.

SERVICE

583- AND 584-TYPE PANELS

1A2 KEY TELEPHONE SYSTEM

1. GENERAL

1.01 This section contains information on the 583- and 584-type panels which provide mounting facilities for 4-inch, 400-series KTUs having 18-contact connectors.

1.02 This section is reissued to provide additional information on mounting the KS-15900L1 interrupter, Table A.

1.03 This issue of the section is based on the following drawings:

SD-69502-01, Issue 2—Station Systems, Key Telephone System 1A2, 583-Type Panel Connections

SD-69552-01, Issue 4—Station Systems, Key Telephone System 1A2, 584B Panel Connections

SD-69591-01, Issue 2—Station Systems, Key Telephone System 1A2, 584C Panel Connections

SD-69559-01, Issue 9—Station Systems, Key Telephone System 1A2, Tie Line and Station Line Circuits

SD-69917-01, Issue 1—Low-Voltage Monitor Circuit

SD-69513-01, Issue 15—Key Telephone System 1A2, CO or PBX Line Circuit

SD-69651-01, Issue 1—Key Telephone System 1A2, CO or PBX Line Circuit (400G)

SD-69921-01, Issue 1—Key Telephone System 1A2, Toll Restriction Circuit

SD-69942-01, Issue 4—Key Telephone System 1A2, CO or PBX Line Circuit (400H)

If this section is to be used with equipment or apparatus reflecting later issues of the drawings, reference should be made to the SDs and CDs to determine the extent of the changes and the manner in which the section may be affected.

1.04 Station, power and interpanel connections to 583A (MD) and 584A (MD) panels are provided with wire-wrap terminals. The KS-16363L1 hand grip wrapping tool should be used to wrap stripped wires. A KS-16492L2 unwrapping tool should be used to remove a wire-wrapped termination.



See appropriate sections in Divisions 069, 074, and 075 which provide reference guides to tool identification, parts, operational requirements, and ordering information, plus approved preparation procedures for connecting wires to terminals.

1.05 Power and interpanel connections to 584B (MD) and 584C panels are made to screw terminals. Station connections are made by using connector cables.

1.06 Incoming CO lines to be installed in compliance with the Federal Communications Commission (FCC) Registration Program must be routed through a standard network interface. Information on

NOTICE
Not for use or disclosure outside the
Bell System except under written agreement

approved interfaces is contained in Section 461-604-105, entitled Connecting Blocks, 66M3-50R—Identification, Installation, and Maintenance.

2. IDENTIFICATION

PURPOSE

- To provide mounting facilities for the following KTUs:

  (a) 400-Type—CO/PBX line circuit

  (b) 401A—Manual intercom line circuit

  (c) 415A—Automatic dc signaling, private line circuit

  (d) 461A—Manual signaling, ringdown private line circuit

  (e) 467A—Low-voltage monitor circuit

  (f) 469A—Lamp extender circuit

  (g) 471A—Battery reversal toll restriction circuit.

APPLICATION

- Large centralized 1A2 Key Telephone System arrangements.

ORDERING GUIDE

- See Table A.

DESIGN FEATURES

2.01 Panels mount on any frame structure designed for 23-inch wide mounting plates. Each panel is 4 inches high.

2.02 Panels are equipped with 18-pin connectors and are primarily intended, by internal wiring, for use with the 400-type (CO or PBX line circuit) and 401A (manual intercom line circuit) KTUs. Other 18-pin KTUs such as the 415A, 461A, 467A, 469A, and 471-type are electrically and physically compatible and can be used in these panels. The KTUs can be installed in any connector, with the exception of the 401A, 415A, and 461A KTUs which cannot be installed in J13 of the 583A (MD) or 584A (MD) panel. The 467A KTU monitors the -24 volt signal battery supply for a low-voltage condition. No external connections are required for this KTU.

2.03 The KTUs are locked into place by a slide retainer bar furnished with the panels. A second retainer can be installed on the bottom of the 584B (MD) panel. This 824015945 (P-40J594) retainer bar and three 802108001 (P-210800) mounting screws must be ordered separately.

A. 583A (MD) and 584A (MD) Panels

2.04 The 583A (MD) panel accepts up to fifteen 400-type, or fourteen 401A, 415A, 467A, 469A, or 471-type plug-in KTUs. The KTUs can be installed in any connector with the exception of the 401A, 415A, and 461A KTUs which cannot be installed in J13. Common leads (LF, LW, etc) are interconnected to like-designated terminal leads on other 584-type panels.

2.05 The 584A (MD) panel accepts thirteen 400-type, 467A, 469A, 471-type, or twelve 401A, 415A or 461A KTUs. The KTUs can be installed in any connector with the exception of the 401A, 415A, and 461A KTUs which cannot be installed in J13. The panel is equipped with a KS-15900L1 (10 volt ac) interrupter. When it is necessary to use 24 volts dc to operate the interrupter, substitute a KS-19384L1 (MD) or KS-19384L2 interrupter.

2.06 The 583A and 584A panels are equipped with nine cartridge-type fuses for lamp, relay, and talk battery as shown in Table B.

2.07 Lamp supply and "B" battery fuses serve two groups of connectors per panel: J1 through J8, and J9 through J13 on the 584A panel; J1 through J8, and J9 through J15 on the 583A panel.

2.08 Common control leads such as LW, LF, etc, are factory-wired between the connectors and are terminated on individual 302A terminal strips serving two connectors each. These common leads are separated into two groups and can be associated with separate common equipment, or included as part of other grouped lines served by another panel.

♦ TABLE A ♦

ORDERING GUIDE

PANEL				REPLACEABLE COMPONENTS	ASSOCIATED APPARATUS (ORDER SEPARATELY)
583A (MD)	584A (MD)	584B (MD)	584C		
		•	•	Fuse, 24C (2A)	
		•	•	Fuse, 24E (1/2A)	
		•	•	Fuse, 24F (5A)	
		•	•	Fuse, 24G (1-1/3A)	
•	•			Fuse * AGX-1 / † 361001 (1A)	
•	•			Fuse * AGX-2 / † 361002 (2A)	
	•			Interrupter KS-15900, L1	
			•	Plug, Option 834482952 (P-44Y295)	
		•		Plug, Option 814688685 (P-46H868)	
•	•	•	•		Block, Connecting, 66B4-25
		•	•		Cable, Connector, A25B, A65A, or A75B
		•	•		Interrupter, KS-15900, L1 (10V ac) (Note)
		•	•		Interrupter, KS-19384, L1 (MD)‡ or KS-19384, L2 (24V dc)
•	•	•	•		Units, Telephone Key 400D, 401A, 412A, 415A 461A, 467A, 469A, or 471A (order as required)

* Bussman No.
† Littelfuse No.
‡ 584B (MD) and C only.
Note: Bracket 814837449 (P-48C744) and associated screw 840058564 (two required) are required to mount KS-15900, List 1 interrupter if the receptacle [834483158 (P-44Y315)] is not equipped with mounting bosses or if interrupter is not equipped with captive screws

TABLE B

FUSE DISTRIBUTION OF 583A (MD) AND 584A (MD) PANELS

FUSE			583A (MD)	584A (MD)
DESIGN	NO.	CAPACITY	CONNECTOR SERVED	
LF1	1	2A	1-8	1-8
LW1	2	2A	1-8	1-8
LS	3	2A	1-8	1-8
B BAT.	4	1A	1-8	1-8
A BAT.	5	1A	7&8	7&8
SPARE	6	0.5A	—	*
LS	7	2A	9-15	9-13
B BAT.	8	1A	9-15	9-13
LF2	9	2A	9-15	9-13
LW2	10	2A	9-15	9-13

* Fuse 6 used when 584A (MD) panel is modified to accept 412A KTU.

B. 584B (MD) and 584C Panels

2.09 These panels (Fig. 1 and 2) are similar in capacity and function to the 584A (MD) panel. The 400-series KTUs and the KS interrupter must be ordered separately.

2.10 The 584B (MD) and 584C panels have identical front sides and accept thirteen 400-type 401A, 415A, 461A, 467A, 469A, or 471-type plug-in KTUs. The KTUs may be intermixed in any connector position. A single connector (J14) is provided for the interrupter or for a 412A KTU (auxiliary relay circuit).

2.11 All line and station wiring is factory-wired from the connectors to three 50-contact KS-type plugs numbered 1, 2, and 3 (Fig. 1 and 2) on the rear of the panel; this permits use of A-type connector cables for line and station terminations.

2.12 One A65A connector cable is used to provide connections to a distribution terminal for each panel; or one A75A, or three A25B connector cables may be used in place of the A65A connector cable. When one A75A or three A25B connector cables are used, the last 10 pair (green binder) of the A75A cable or the last 10 pair of the A25B cable, connected to plug 3, are spare pairs.

2.13 Power supply wiring, interpanel strapping, and miscellaneous circuits are field-connected to the 46-screw terminal field of the 584B panel or 44-screw terminal field of the 584C panel.

2.14 The 584C panel features a combined fuse panel and screw terminal field while the 584B panel has a separate fuse panel and screw terminal field (Fig. 1). The panels are equipped with 24-type fuses grouped according to potential and rating.

2.15 Factory-wired options allow rearrangement of lamp distribution and fusing within and/or between one or more of the panels.

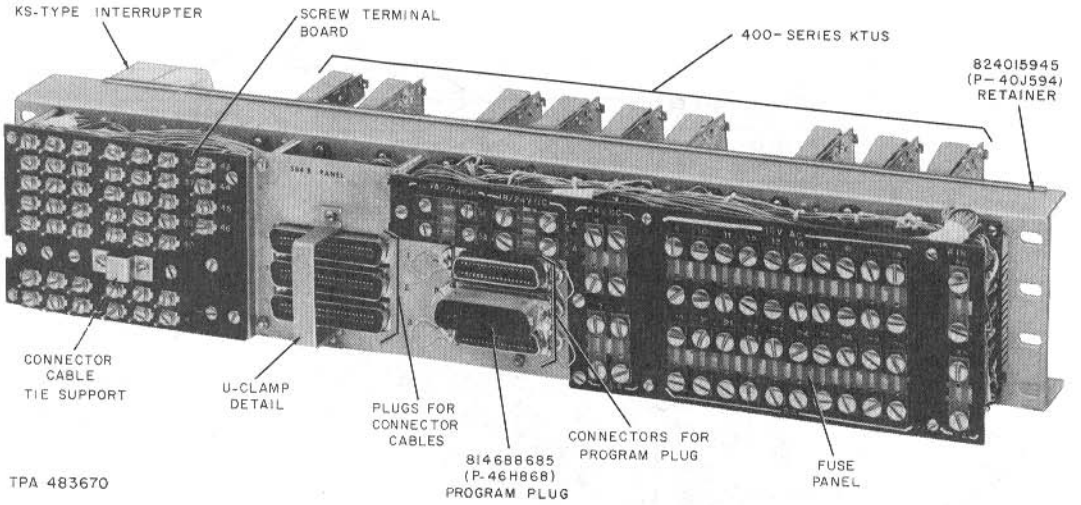

Fig. 1—584B (MD) Panel, Rear View

2.16 Lamp fusing is divided into lamp flash (LF), lamp wink (LW), and lamp steady (LS). For lamp functions, each panel is divided into three groups of three lines each and one group of four lines (Table C). No more than 50 lamps can be supplied from any group ***or the capacity of the interrupter contacts will be exceeded.***

2.17 Fusing and terminal assignments of the 584C panel differ extensively from the 584B panel. Fuse assignments are shown in Table D.

2.18 The three 34-contact connectors on the 584B panel lettered A, B, and C (Fig. 1) serve as receptacles for the factory-wired lamp fusing and programming options. One 18-contact connector, J15 (Fig. 2), is used for the same purpose in the 584C panel. These permit distribution and fusing of lamp circuits, either within or external to the panel. One 814688685 (P-46H868) program option plug is furnished with each 584B panel, and one combined 834482952 (P-44Y295) Program A/Program C option plug is furnished with each 584C panel.

2.19 When the 584B panel is used alone, the program option plug is placed in receptacle A. When the 584C panel is used alone, Program A is used by inserting the option plug into receptacle J15 so that ***Program A*** may be read from the plug top. The full output of the interrupter is associated within that specified panel. Under this arrangement, fusing for an average of 17 lamps per line circuit is provided, not to exceed 50 lamps per interrupter contact.

2.20 ***Before changing programs, remove power cord from outlet to preclude any possibility of blowing fuses.***

2.21 With the program option plug in receptacle B of the 584B panel and the 10-volt ac input to the interrupter changed to ground, the entire output of the interrupter is used to synchronously drive auxiliary (slave) relay equipment such as the 412A KTU. All lamp flash and lamp wink functions, including those of the master panel, are served from auxiliary relay contacts. The 584C panel is not arranged for Program B.

2.22 With the program option plug in receptacle C of the 584B panel or with the Program C side of the program option plug in the 584C panel, half of the output of the interrupter (LF1, LF2, LW1, and LW2 leads) is used to power an average of eight lamps per line within the panel. The remaining interrupter leads (LF3, LF4, LW3, and LW4) may be used to power up to 100 lamps in succeeding panels not equipped with an interrupter,

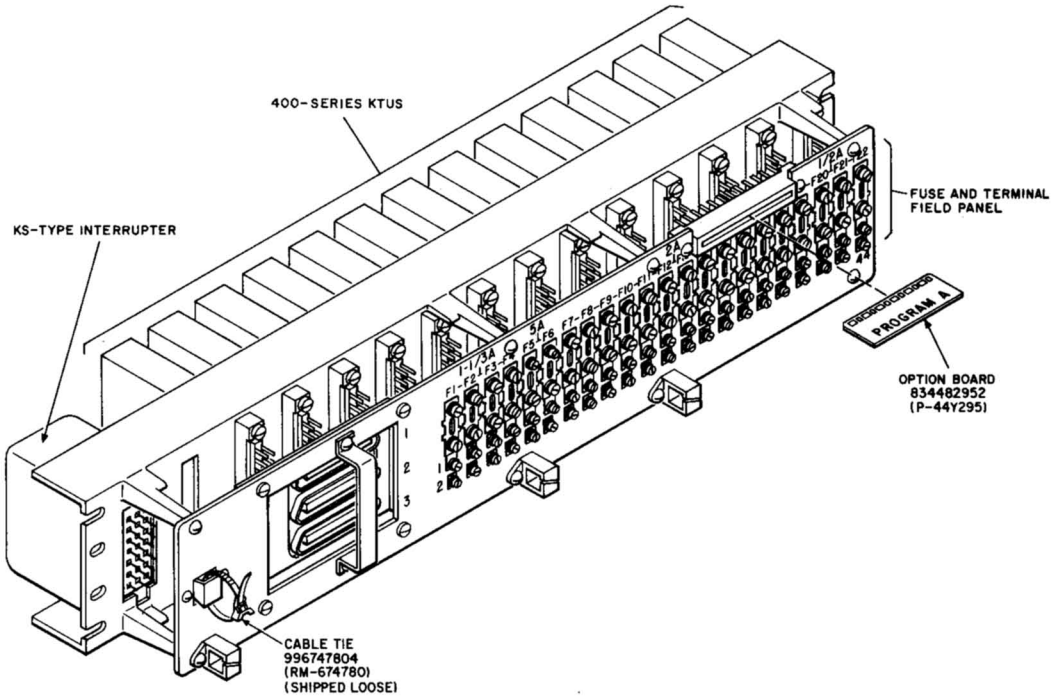

Fig. 2—584C Panel, Rear View

or these leads may be used to drive auxiliary relays requiring dc power. When driving auxiliary relays, it is necessary to provide optional wiring at the interrupter to avoid conflict with lamp battery supply (ac power) connected to other interrupter contacts.

3. INSTALLATION

3.01 For information on apparatus mountings or relay racks on which panels can be mounted, refer to Section 463-140-100.

3.02 The number of station or key cables that can be connected directly to the panels is limited; accordingly, a master distribution point at large key system installations is normally required. For further information on centralized key telephone system installations, refer to Section 518-010-101.

Caution: When installing a 584C panel in the middle of a 16C apparatus mounting, do not plug the 400-type KTU into J1. This may damage the KTU.

Note: To permit subgrouping of common audible signal controls, with or without separate relays or diode matrices, the line circuit leads may be cabled from the panels to a miscellaneous terminal block.

3.03 Panels may be intermixed in large installations. To assist in the distribution of visual signals within an installation, the 584A panel can be modified to accept a 412A KTU in place of the interrupter (Fig. 19).

3.04 Field cabling is dressed along the top rear of the 583A and 584A panels and fanned through the distributing rings to minimize congestion

TABLE C

FUSE DISTRIBUTION OF 584B (MD) AND 584C PANELS

GROUP	584B (MD)						584C			
	PROGRAM A		PROGRAM B		PROGRAM C		PROGRAM A		PROGRAM C	
	FUSE	CONN SERVED	FUSE	CONN SERVED	FUSE	CONN SERVED	FUSE	CONN SERVED	FUSE	CONN SERVED
LF1	14	1-3	22	1-3	14	1-3	18	1-3	18	1-3
LF2	16	7-9	24	7-9	16	7-9	17	7-9	17	7-9
LF3	18	4-6	26	4-6	14	4-6	16	4-6	18	4-6
LF4	20	10-13	28	10-13	16	10-13	15	10-13	17	10-13
LW1	13	1-3	21	1-3	13	1-3	13	1-3	13	1-3
LW2	15	7-9	23	7-9	15	7-9	14	7-9	14	7-9
LW3	17	4-6	25	4-6	13	4-6	11	4-6	13	4-6
LW4	19	10-13	27	10-13	15	10-13	12	10-13	14	10-13
LS1	9	1-3	9	1-3	9	1-3	10	1-3	10	1-3
LS2	10	7-9	10	7-9	10	7-9	9	7-9	9	7-9
LS3	11	4-6	11	4-6	11	4-6	8	4-6	10	4-6
LS4	12	10-13	12	10-13	12	10-13	7	10-13	9	10-13

with factory wiring. Station and feeder cables are connected to the 302A terminal strips by means of an approved wire-wrapping tool. The terminal strips are designated A through H on the 583A panel, and A through G on the 584A panel.

3.05 The connector cable(s) must be brought in from the left rear of the 584B or 584C panel for connection to plugs 1, 2, and 3. A tie point and a U-shaped clamping detail are provided to support the cable(s) and to assure positive mating of plug and connector.

3.06 Power supply connections to the panels may be made by using separate 20-gauge conductor cables, such as 450M (3-pair) or 451M (6-pair) cables.

Note: Where more than one supply is used to provide 10-volt ac and 24-volt dc power, the ground terminals of these supplies should be bonded together.

3.07 Power connections for the 583A and 584A panels are made to the 302A terminal strips or to a fuse. All power connections for the 584B or 584C panels are made to the screw terminal field.

3.08 Verify that each fuse in the panel is the correct rating specified for the circuit. Refer to Table B and/or D.

3.09 Do not exceed lamp limitations of the interrupter in the 584-type panel or of external interrupters connected to panels. Installation of auxiliary relays may be required to provide sufficient current carrying capacity for—

TABLE D
FUSE ASSIGNMENT

FUSE	584B(MD)			584C		
	CAPACITY	CIRCUIT		CAPACITY	CIRCUIT	
1	5A	10V ac or dc	LW1, LW2 LF1, LF2	1-1/3A	B Bat.	
2			LW3, LW4 LF3, LF4		A Bat.	
3	0.5A	Busy Tone			B Bat.	
4		Interrupter Motor Supply (ac or dc)			A Bat.	
5	1-1/3A	A Bat.		5A	10V ac or dc	LW3
						LW4
						LF3
						LF4
6						LW1
						LW2
						LF1
						LF2
7		B Bat.		2A		LS4
8						LS3
9	2A	10V ac or dc	LS1			LS2
10			LS2			LS1
11			LS3			LW3
12			LS4			LW4
13			LW1			LW1
14			LF1			LW2
15			LW2			LF4
16			LF2			LF3
17			LW3			LF2
18			LF3			LF1
19			LW4	0.5A	Interrupter Motor Supply (ac or dc)	
20			LF4		Busy Tone	
21			LW1		AT, 105v ac	
22			LF1		105v ac (RN)	
23			LW2			
24			LF2			
25			LW3			
26			LF3			
27			LW4			
28			LF4			
29	0.5A	AT, 105v ac				
30		105v ac (RN)				

(a) Line lamp multiples above 20 appearances, or

(b) Lamp flash or lamp wink features exceeding 2 amperes per interrupter contact.

3.10 Install the program plug which provides the required arrangement.

3.11 When the 584-type panel arranged for Program A is used to provide interrupted lamp signals to a 597A or 598A panel, the maximum number of 51A lamps fed by each 2-ampere fuse shall not exceed 50. If the 584-type panel is arranged for Program C, the maximum number of 51A lamps fed by each 2-ampere fuse shall not exceed 24.

3.12 Table E shows lamp capacities and average lamps per line for the 583A and the 584A, B, or C panels.

3.13 When it is necessary to synchronize all visual and audible signals for a particular telephone set, all line circuits for lines appearing on that telephone set should derive visual and audible signals from the same interrupter.

3.14 On the 583A and 584A panels, "A" Bat. and GRD for the 401A, 415A, or 461A KTU is factory-wired ***only*** to connectors J7 and J8 (Table B). If other connectors (except J13) are to be equipped with 401A, 415A, or 461A KTU, "A" Bat. and GRD must be field strapped between terminal strip D (associated with J7 and J8) and other connectors to be equipped with the KTU. The 401A, 415A, 461A, 467A, and 471-type KTUs can be installed in any receptacle of the 584B or 584C panel without additional wiring.

3.15 When installing a 461A KTU in these panels, RG must be connected to GRD B as follows:

- 583A or 584A Panel—strap terminal 16 to 25 on TSC for jacks 1 through 8 or TSF for jacks 9 through 15
- 584B—strap terminal 42 to 25 on screw terminal board
- 584C—strap terminal 40 to 3 on screw terminal board.

3.16 When installing a 469A KTU, the L lead of the 400-type KTU must be strapped to the RC lead of the 469A KTU on the connecting block. The lamp output is on L lead of the 469A KTU. See Table F.

TABLE E

LAMP DISTRIBUTION FOR 583A (MD), 584A (MD), 584B (MD) AND 584C PANELS

CAPACITY	583A (MD) PANEL	584A (MD) PANEL	584B (MD), 584C				
			USED ALONE PROGRAM A	AS FIRST PANEL E/W KS-15900, L1, OR KS-19384, L1, (MD) OR L2 INTERRUPTER PROGRAM B (584B ONLY) (MD)	AS FIRST PANEL E/W KS-15900, L1, OR KS-19384, L1 (MD) OR L2 INTERRUPTER PROGRAM C	AS SECOND PANEL WITHOUT 412A KTU PROGRAM C	AS SECOND OR SUCCEEDING PANEL E/W 412A KTU PROGRAM A
Lamps	100	100	200	200*	100	100	200
Average Lamps Per Line	7	8	17	17*	8	8	17

* Entire output of interrupter used to drive auxiliary relays. Lamp flash and lamp wink functions are served from an external source.

TABLE F

STRAPPING FOR THE 469A KTU IN THE 583- AND 584-TYPE PANELS

A 400-TYPE KTU				B 469A KTU			C 469A OUTPUT TO LAMPS		
CONN	BLK	TERM		CONN	BLK	TERM	CONN	BLK	TERM
J1	1	8F	STRAP	J1	1	10F	J1	1	8F
J2		18F		J2		20F	J2		18F
J3		28F		J3		30F	J3		28F
J4		38F		J4		40F	J4		38F
J5		48F		J5		50F	J5		48F
J6	2	8A		J6	2	10A	J6	2	8A
J7		18A		J7		20A	J7		18A
J8		28A		J8		30A	J8		28A
J9		38A		J9		40A	J9		38A
J10		48A		J10		50A	J10		48A
J11	3	8F		J11	3	10F	J11	3	8F
J12		18F		J12		20F	J12		18F
J13		28F		J13		30F	J13		28F
J14		38F		J14		40F	J14		38F
J15		48F		J15		50F	J15		48F

Note: Strap L lead from jack requiring lamp multiple (Col. A) to connector containing 469A KTU (Col. B). Connect lamp leads from telset to L lead of same 469A KTU connector (Col. C).

4. CONNECTIONS

4.01 Terminate station, CO, or PBX line connections directly to panels or to 66-type connecting blocks at the master distribution point. (See Table G.)

4.02 A block diagram of typical arrangements (and figure references) of 583- and 584-type panels is shown in Fig. 3.

4.03 ***Connection Index:***

Fig. 4—584A (MD) Panel Equipped With Interrupter (Panel can be used alone and also to control one other panel)

Fig. 5—583A (MD) or 584A (MD) Panel Not Equipped With Interrupter or 412A KTU

TABLE G

CONNECTIONS TO DISTRIBUTION POINT AND/OR PANELS

CIRCUIT		LEAD DESIG	DISTRIBUTION POINT BLOCK 1 66-TYPE CONNECTING BLOCK			TERMINAL ON PANEL			
								584B(MD), 584C	
			ROW	COL	COLOR BL-W BINDER	583A (MD)	584A (MD)	PIN	PLUG
Line 1	CO PBX	T R	1 2	F	W-BL BL-W	17A 18A		26 1	1
	STA	T R	3 4		W-O O-W	19A 20A		27 2	
		A A1	5 6		W-G G-W	21A 22A		28 3	
		LG L	7 8		W-BR BR-W	23A 24A		29 4	
		RG RC	9 10		W-S S-W	25A 26A		30 5	
Line 2	CO PBX	T R	11 12		R-BL BL-R	1A 2A		31 6	
	STA	T R	13 14		R-O O-R	3A 4A		32 7	
		A A1	15 16		R-G G-R	5A 6A		33 8	
		LG L	17 18		R-BR BR-R	7A 8A		34 9	
		RG RC	19 20		R-S S-R	9A 10A		35 10	
Line 3	CO PBX	T R	21 22		BK-BL BL-BK	17B 18B		36 11	
	STA	T R	23 24		BK-O O-BK	19B 20B		37 12	
		A A1	25 26		BK-G G-BK	21B 22B		38 13	
		LG L	27 28		BK-BR BR-BK	23B 24B		39 14	
		RG RC	29 30		BK-S S-BK	25B 26B		40 15	
Line 4	CO PBX	T R	31 32		Y-BL BL-Y	1B 2B		41 16	
	STA	T R	33 34		Y-O O-Y	3B 4B		42 17	
		A A1	35 36		Y-G G-Y	5B 6B		43 18	
		LG L	37 38		Y-BR BR-Y	7B 8B		44 19	
		RG RC	39 40		Y-S S-Y	9B 10B		45 20	
Line 5	CO PBX	T R	41 42		V-BL BL-V	17C 18C		46 21	
	STA	T R	43 44		V-O O-V	19C 20C		47 22	
		A A1	45 46		V-G G-V	21C 22C		48 23	
		LG L	47 48		V-BR BR-V	23C 24C		49 24	
		RG RC	49 50		V-S S-V	25C 26C		50 25	

TABLE G (Cont)

CONNECTIONS TO DISTRIBUTION POINT AND/OR PANELS

CIRCUIT		LEAD DESIG	DISTRIBUTION POINT BLOCK 2 66-TYPE CONNECTING BLOCK			TERMINAL ON PANEL			
			ROW	COL	COLOR O-W BINDER	583A (MD)	584A (MD)	584B(MD), 584C PIN	584B(MD), 584C PLUG
Line 6	CO PBX	T	1	A	W-BL	1C		26	2
		R	2		BL-W	2C		1	
	STA	T	3		W-O	3C		27	
		R	4		O-W	4C		2	
		A	5		W-G	5C		28	
		A1	6		G-W	6C		3	
		LG	7		W-BR	7C		29	
		L	8		BR-W	8C		4	
		RG	9		W-S	9C		30	
		RC	10		S-W	10C		5	
Line 7	CO PBX	T	11		R-BL	17D		31	
		R	12		BL-R	18D		6	
	STA	T	13		R-O	19D		32	
		R	14		O-R	20D		7	
		A	15		R-G	21D		33	
		A1	16		G-R	22D		8	
		LG	17		R-BR	23D		34	
		L	18		BR-R	24D		9	
		RG	19		R-S	25D		35	
		RC	20		S-R	26D		10	
Line 8	CO PBX	T	21		BK-BL	1D		36	
		R	22		BL-BK	2D		11	
	STA	T	23		BK-O	3D		37	
		R	24		O-BK	4D		12	
		A	25		BK-G	5D		38	
		A1	26		G-BK	6D		13	
		LG	27		BK-BR	7D		39	
		L	28		BR-BK	8D		14	
		RG	29		BK-S	9D		40	
		RC	30		S-BK	10D		15	
Line 9	CO PBX	T	31		Y-BL	17E		41	
		R	32		BL-Y	18E		16	
	STA	T	33		Y-O	19E		42	
		R	34		O-Y	20E		17	
		A	35		Y-G	21E		43	
		A1	36		G-Y	22E		18	
		LG	37		Y-BR	23E		44	
		L	38		BR-Y	24E		19	
		RG	39		Y-S	25E		45	
		RC	40		S-Y	26E		20	
Line 10	CO PBX	T	41		V-BL	1E		46	
		R	42		BL-V	2E		21	
	STA	T	43		V-O	3E		47	
		R	44		O-V	4E		22	
		A	45		V-G	5E		48	
		A1	46		G-V	6E		23	
		LG	47		V-BR	7E		49	
		L	48		BR-V	8E		24	
		RG	49		V-S	9E		50	
		RC	50		S-V	10E		25	

TABLE G (Cont)

CONNECTIONS TO DISTRIBUTION POINT AND/OR PANELS

CIRCUIT		LEAD DESIG	DISTRIBUTION POINT BLOCK 3 66-TYPE CONNECTING BLOCK			TERMINAL ON PANEL			
								584B(MD), 584C	
			ROW	COL	COLOR G-W BINDER	583A (MD)	584A (MD)	PIN	PLUG
Line 11	CO PBX	T R	1 2	F	W-BL BL-W	17F 18F		26 1	3
	STA	T R	3 4		W-O O-W	19F 20F		27 2	
		A A1	5 6		W-G G-W	21F 22F		28 3	
		LG L	7 8		W-BR BR-W	23F 24F		29 4	
		RG RC	9 10		W-S S-W	25F 26F		30 5	
Line 12	CO PBX	T R	11 12		R-BL BL-R	1F 2F		31 6	
	STA	T R	13 14		R-O O-R	4F 3F		32 7	
		A A1	15 16		R-G G-R	5F 6F		33 8	
		LG L	17 18		R-BR BR-R	7F 8F		34 9	
		RG RC	19 20		R-S S-R	9F 10F		35 10	
Line 13	CO PBX	T R	21 22		BK-BL BL-BK	17G 18G		36 11	
	STA	T R	23 24		BK-O O-BK	19G 20G		37 12	
		A A1	25 26		BK-G G-BK	21G 22G		38 13	
		LG L	27 28		BK-BR BR-BK	23G 24G		39 14	
		RG RC	29 30		BK-S S-BK	25G 26G		40 15	
Line 14	CO PBX	T R	31 32		Y-BL BL-Y	17H 18H		41 16	
	STA	T R	33 34		Y-O O-Y	19H 20H		42 17	
		A A1	35 36		Y-G G-Y	21H 22H		43 18	
		LG L	37 38		Y-BR BR-Y	23H 24H		44 19	
		RG RC	39 40		Y-S S-Y	25H 26H		45 20	
Line 15	CO PBX	T R	41 42		V-BL BL-V	1H 2H		46 21	(NOTE)
	STA	T R	43 44		V-O O-V	3H 4H		47 22	
		A A1	45 46		V-G G-V	5H 6H		48 23	
		LG L	47 48		V-BR BR-V	7H 8H		49 24	
		RG RC	49 50		V-S S-V	9H 10H		50 25	

Note: When using other than A65A connector cable with the 584B (MD) panel, these leads are spare and are dead-dressed long enough to reach any screw terminal and stored behind back panel.

Fig. 6—584B (MD) Panel Equipped With Interrupter (Panel not used to control other panels)

Fig. 7—584B (MD) Panel Equipped With Interrupter (Panel used to control one other panel)

Fig. 8—584B (MD) Panel Not Equipped With Interrupter or 412A KTU

Fig. 9—584C Panel Not Equipped With Interrupter or 412A KTU

Fig. 10—584C Panel Equipped With Interrupter (Panel not used to control other panels)

Fig. 11—584C Panel Equipped With Interrupter (Panel used to control one other panel)

Fig. 12—584B (MD) Panel Equipped With Interrupter (Master panel used to control up to 200 other panels each equipped with 412A KTU)

Fig. 13—584B (MD) Panel Equipped With 412A KTU (Panel used to control one other panel)

Fig. 14—584B (MD) Panel Equipped With 412A KTU (Panel not used to control other panels)

Fig. 15—584A (MD) Panel Equipped With 412A KTU (Panel used alone and also to control one other panel)

Fig. 16—584C Panel Equipped With 412A KTU (Panel not used to control other panels)

Fig. 17—584C Panel Equipped With Interrupter (Master panel used to control up to 200 other panels each equipped with 412A KTU)

Fig. 18—584C Panel Equipped With 412A KTU (Panel used to control one other panel)

Fig. 19—Modification of 584A (MD) Panel to Accept 412A KTU

Fig. 20—Manual Intercommunication Connections for 583A (MD) and 584A (MD) Panels

Fig. 21—Typical Functional Layout of 584B (MD) and 584C Panels Showing Line Circuit 1 Only (400D or 400G KTU)

Fig. 22—Typical Functional Layout of 584C Panel Showing Line Circuit 1 Only (400H KTU)

Fig. 23—Connections for 471-Type KTU in 583- or 584-Type Panel

5. MAINTENANCE

5.01 Maintenance on panels should be limited to tracing of wiring troubles, fuse replacement, and replacement of improperly operating KTUs.

5.02 When trouble is encountered, proceed as follows.

(a) Determine if trouble is located at the individual station or is common to the system.

(b) If common to the system:

(1) Check power supply and fuses.

(2) Determine which KTU is not operating properly.

(3) Replace KTU with one known to be in operating condition to determine whether trouble is located in the KTU or in external circuitry.

Note: Be sure that applicable options are correctly strapped on the replaced KTU.

(4) If replacement of the KTU does not correct the trouble, it is external to the KTU and the complete wiring should be checked.

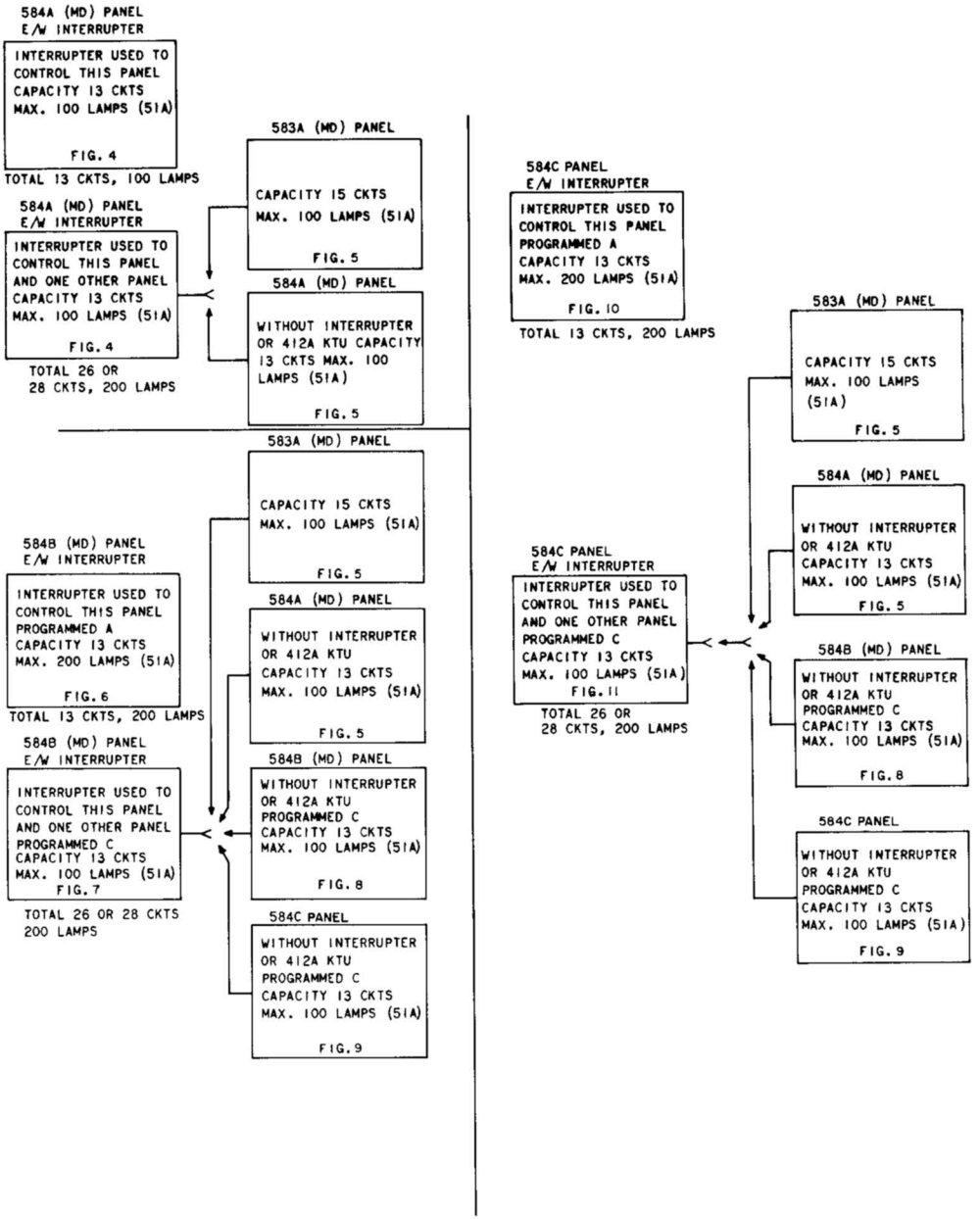

Fig. 3—Block Diagram Showing Arrangements of 583A (MD), 584A (MD), 584B (MD), and 584C Panels (Sheet 1 of 3)

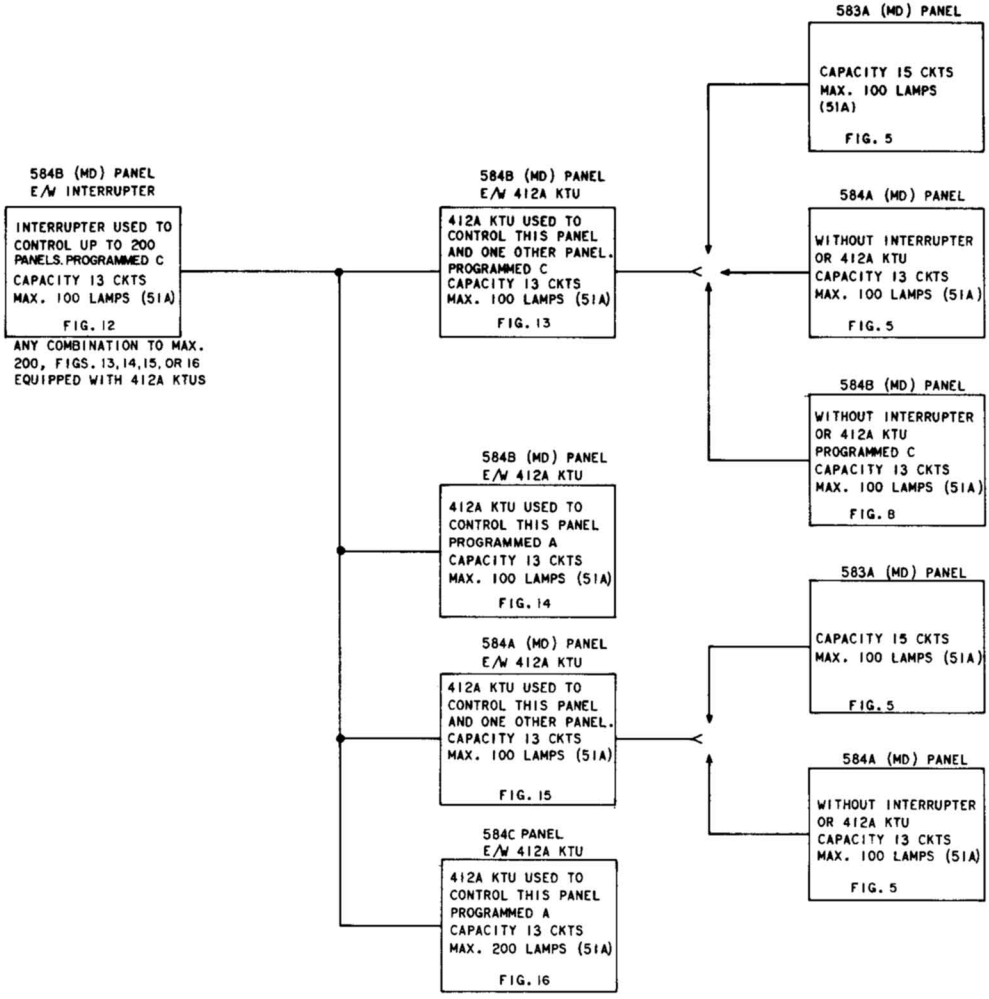

Fig. 3—Block Diagram Showing Arrangements of 583A (MD), 584A (MD), 584B (MD), and 584C Panels (Sheet 2 of 3)

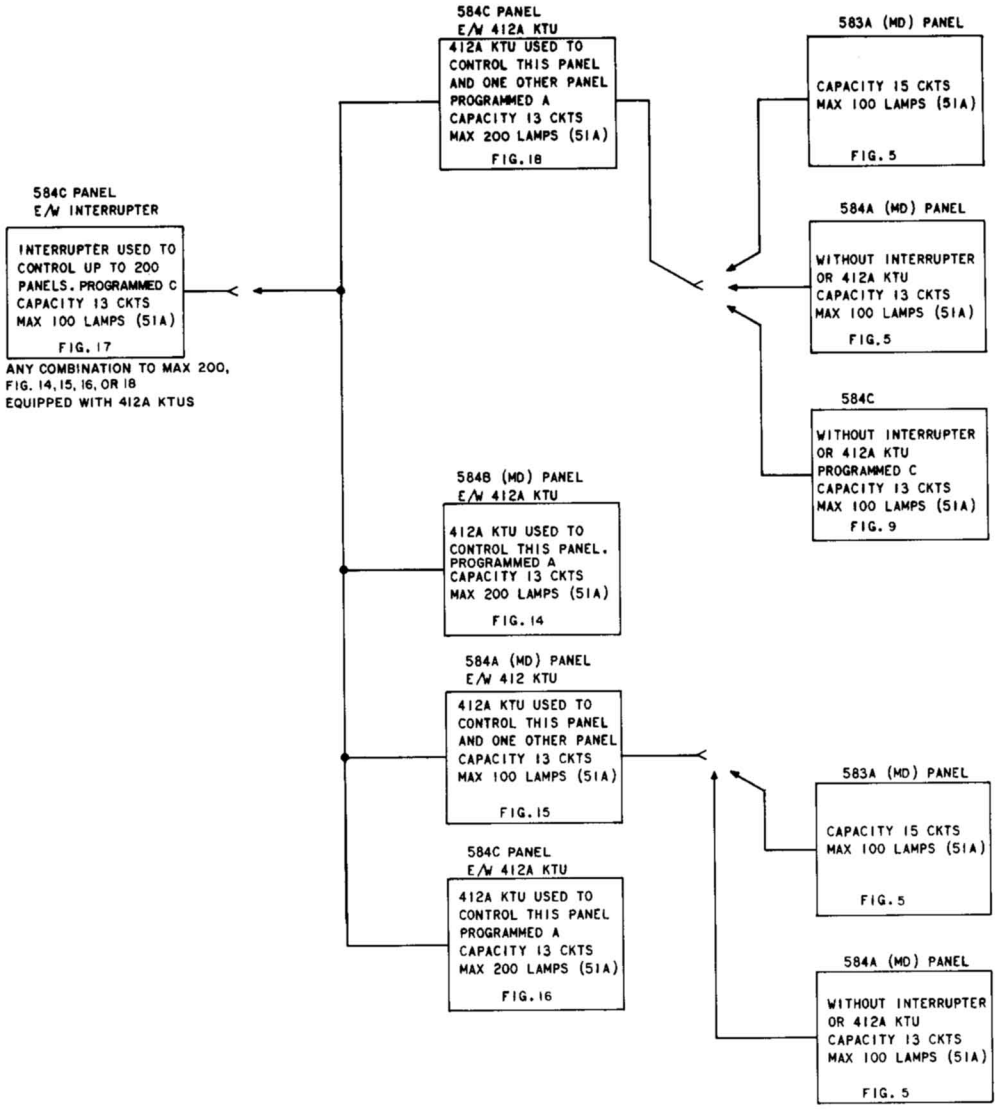

Fig. 3—Block Diagram Showing Arrangements of 583A (MD), 584A (MD), 584B (MD), and 584C Panels (Sheet 3 of 3)

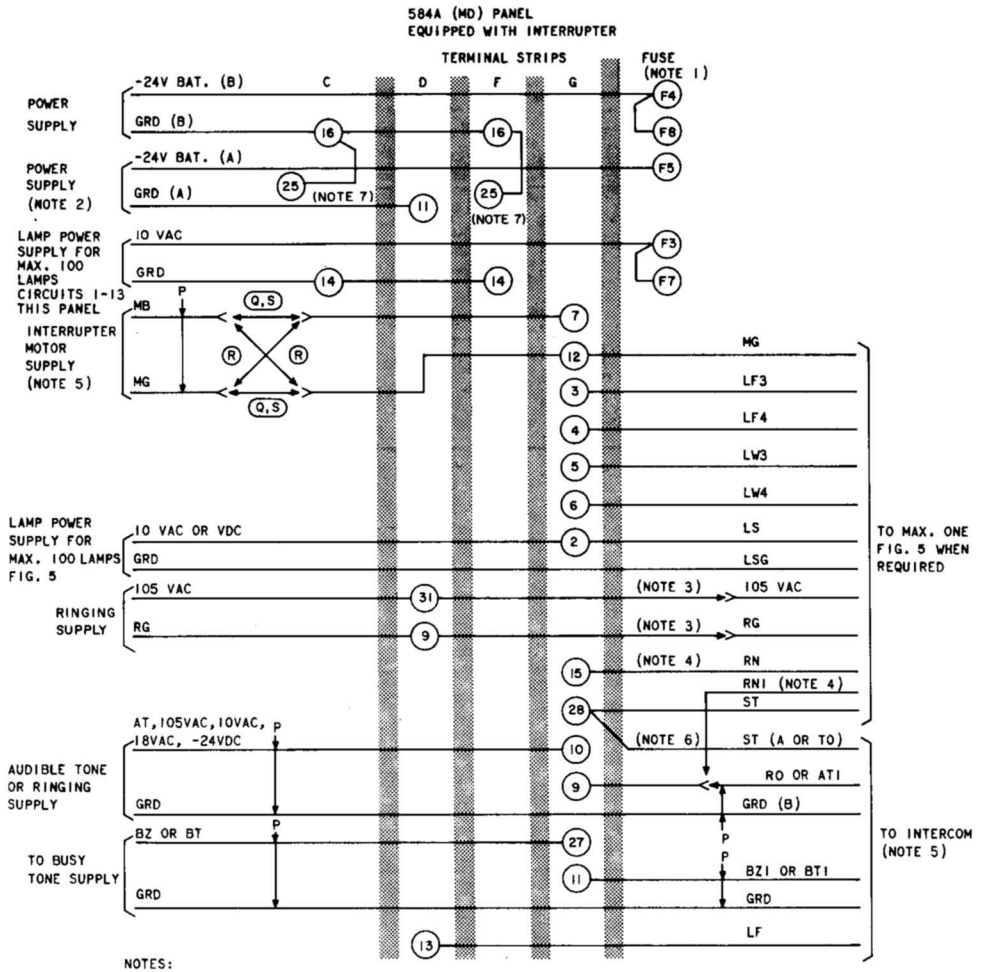

NOTES:

1. MAKE CONNECTIONS TO TERMINAL 1 OF FUSE.
2. PROVIDE ONLY WHEN USING KEY TELEPHONE UNITS THAT REQUIRE -24V BAT. (A), SUCH AS THE 401A KTU: CONNECTIONS SHOWN SERVES CONNECTORS J7 AND J8 (SEE FIG. 20).
3. CAN BE MULTIPLED TO OTHER PANELS, PROVIDED THE POWER SOURCE OUTPUT IS NOT EXCEEDED.
4. WHEN RN LEAD IS LOADED TO CAPACITY, ADDITIONAL AUDIBLE SIGNALS MAY BE CONNECTED TO RNI LEAD, PROVIDED THE 6A KTS AND/OR (S) OPTION IS NOT USED.
5. WHEN (R) OPTION IS FURNISHED, INTERRUPTER CANNOT BE USED FOR 6A KTS FEATURES.
   (Q) KS-19384, L2 (-24 VDC)
   (R) KS-19384, L1 (-24 VDC) (MD)
   (S) KS-15900, L1 (10 VAC)
6. GROUND SUPPLIED TO ST LEAD FROM CONNECTING CIRCUIT MUST BE THE GROUND ASSOCIATED WITH THE SUPPLY USED TO DRIVE THE INTERRUPTER MOTOR.
7. ADD STRAP WHEN INSTALLING 461A KTU IN PANEL.

Fig. 4—584A (MD) Panel Equipped With Interrupter (Panel can be used alone and also to control one other panel)

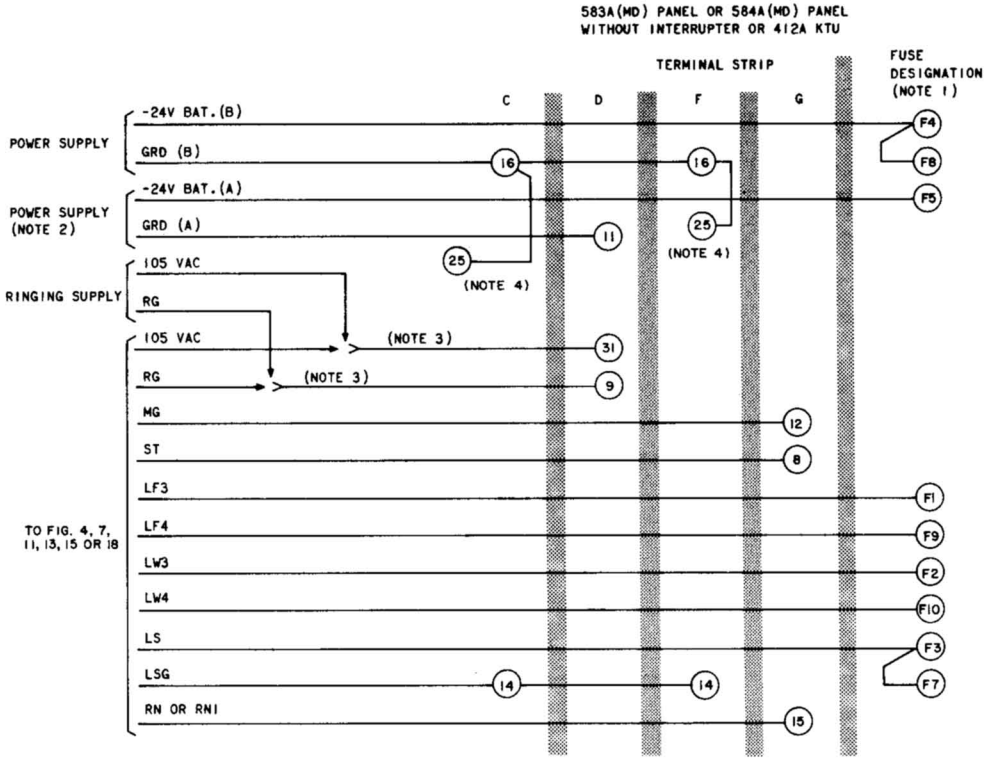

NOTES:
1. MAKE CONNECTIONS TO TERMINAL 1 OF FUSE.
2. PROVIDE ONLY WHEN USING KEY TELEPHONE UNITS THAT REQUIRE -24V BAT.(A), SUCH AS THE 401A KTU. CONNECTION AS SHOWN SERVES CONNECTORS J7 AND J8 (SEE FIG. 20).
3. IF LEADS FROM PRECEDING PANEL ARE LOADED TO CAPACITY, PROVIDE SEPARATE RINGING SUPPLY TO THIS PANEL.
4. ADD STRAP WHEN INSTALLING 461A KTU IN PANEL.

Fig. 5—583A (MD) or 584A (MD) Panel Not Equipped With Interrupter or 412A KTU

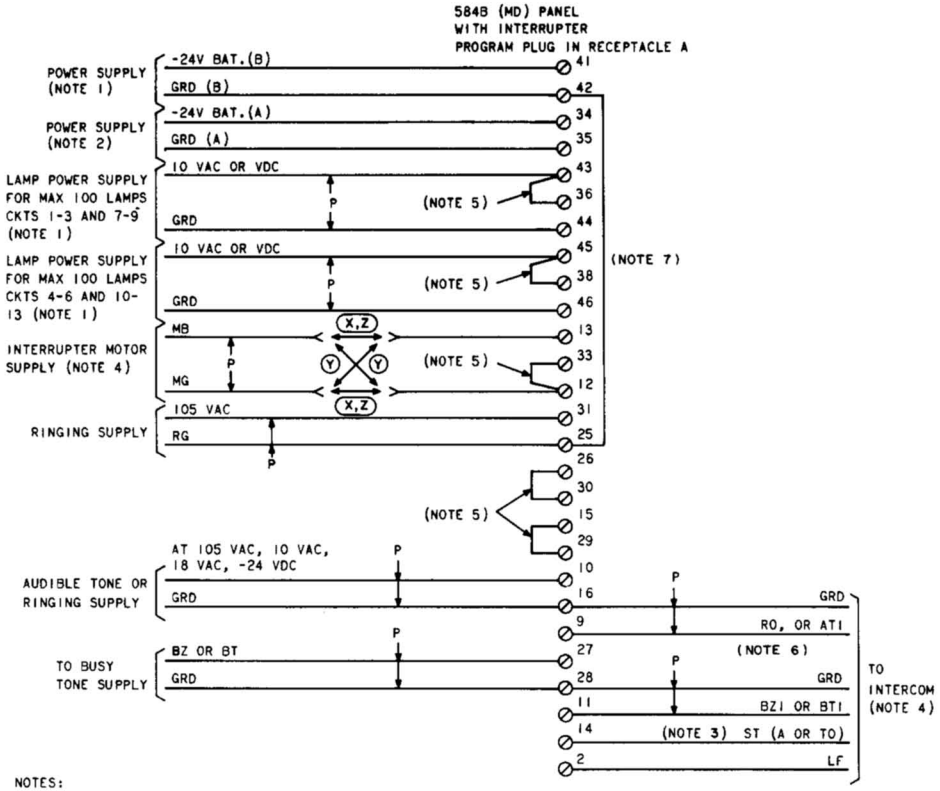

NOTES:

1. WHEN MORE THAN ONE SUPPLY IS USED TO PROVIDE -24V DC AND 10 VAC, POWER SUPPLY GROUND TERMINALS SHOULD BE BONDED TOGETHER.
2. PROVIDE ONLY WHEN USING KEY TELEPHONE UNITS THAT REQUIRE -24V BAT.(A), SUCH AS THE 401A KTU. CONNECTION AS SHOWN SERVES ALL CONNECTORS ON PANEL.
3. GROUND SUPPLIED TO ST LEAD FROM CONNECTING CIRCUIT MUST BE THE GROUND ASSOCIATED WITH THE SUPPLY USED TO DRIVE THE INTERRUPTER MOTOR.
4. WHEN Y OPTION IS FURNISHED, INTERRUPTER CANNOT BE USED FOR 6A KTS FEATURES.
   - (X) KS-19384, L2 (-24 VDC)
   - (Y) KS-19384, L1 (-24 VDC) (MD)
   - (Z) KS-15900, L1 (10 VAC)
5. FACTORY FURNISHED STRAP.
7. ADD STRAP WHEN INSTALLING 461A KTU IN PANEL.

IF 6A KTS AND/OR (S) OPTION IS NOT USED, THIS LEAD MAY BE USED TO ACCOMODATE ADDITIONAL RINGERS OR BUZZERS AND FUSE 21 MAY BE INCREASED TO A 2 AMP FUSE.

Fig. 6—584B (MD) Panel Equipped With Interrupter (Panel not used to control other panels)

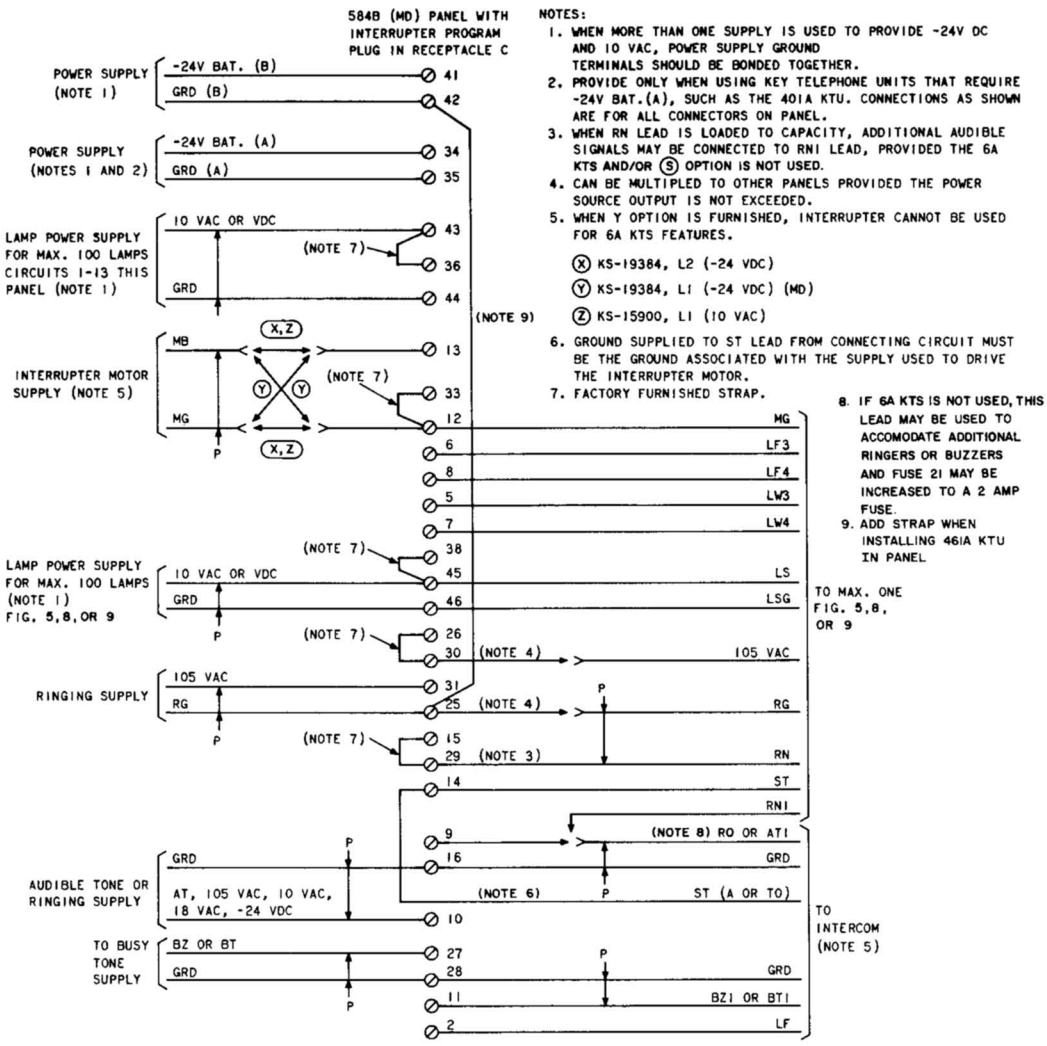

Fig. 7—584B (MD) Panel Equipped With Interrupter (Panel used to control one other panel)

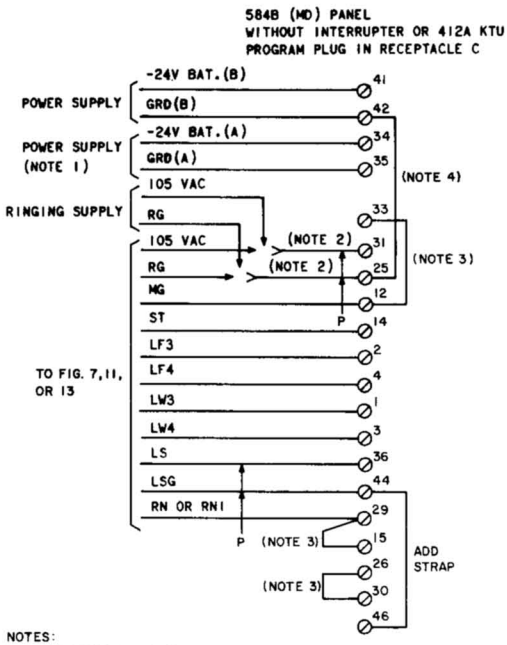

NOTES:

1. PROVIDE ONLY WHEN USING KEY TELEPHONE UNITS THAT REQUIRE -24V BAT. (A), SUCH AS THE 401A KTU. CONNECTION AS SHOWN SERVES ALL CONNECTORS ON PANEL.
2. IF LEADS FROM PRECEDING PANEL ARE LOADED TO CAPACITY, PROVIDE SEPARATE RINGING SUPPLY TO THIS PANEL.
3. FACTORY FURNISHED STRAP.
4. ADD STRAP WHEN INSTALLING 461A KTU IN PANEL

Fig. 8—584B (MD) Panel Not Equipped With Interrupter or 412A KTU

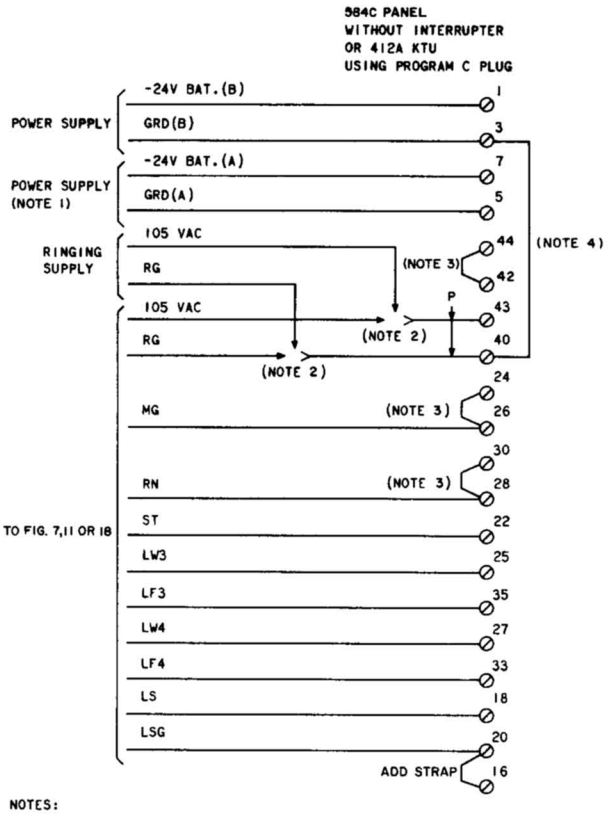

NOTES:

1. PROVIDE ONLY WHEN USING KEY TELEPHONE UNITS THAT REQUIRE -24V BAT.(A), SUCH AS THE 401A KTU.
2. IF LEADS FROM PRECEDING PANEL ARE LOADED TO CAPACITY, PROVIDE SEPARATE RINGING SUPPLY TO THIS PANEL.
3. FACTORY FURNISHED STRAP.
4. ADD STRAP WHEN INSTALLING 461A KTU IN 584C PANEL.

Fig. 9—584C Panel Not Equipped With Interrupter or 412A KTU

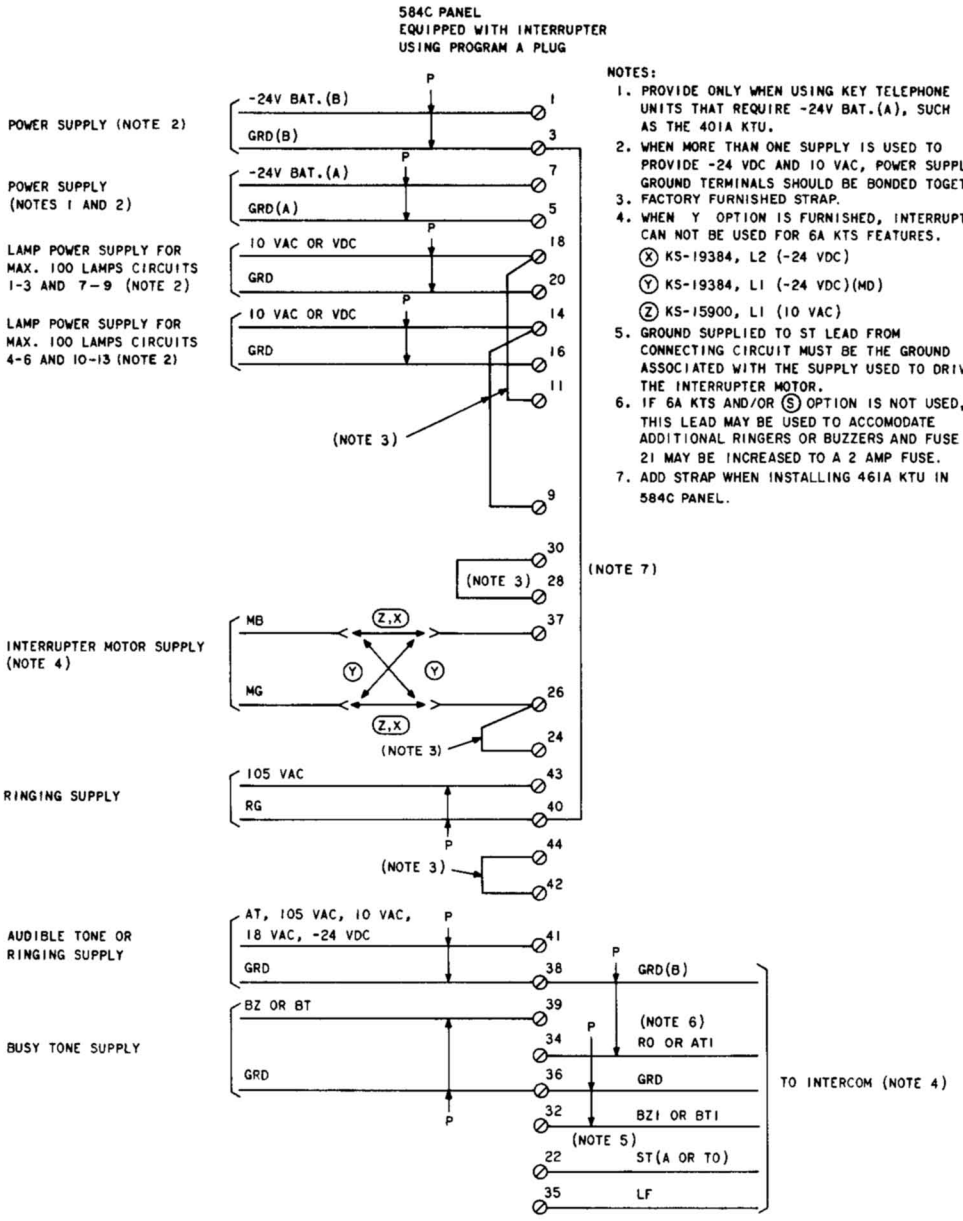

Fig. 10—584C Panel Equipped With Interrupter (Panel not used to control other panels)

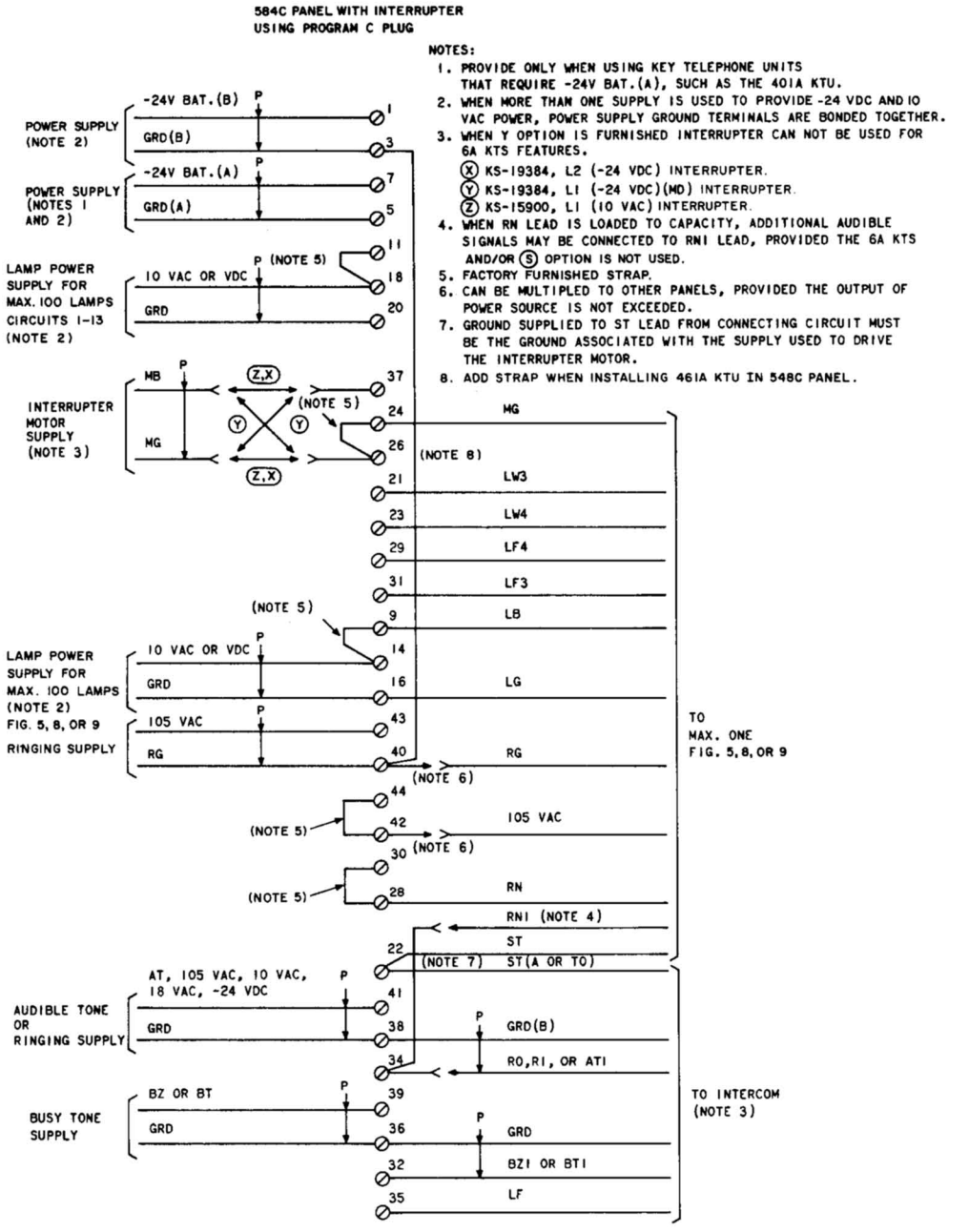

Fig. 11—584C Panel Equipped With Interrupter (Panel used to control one other panel)

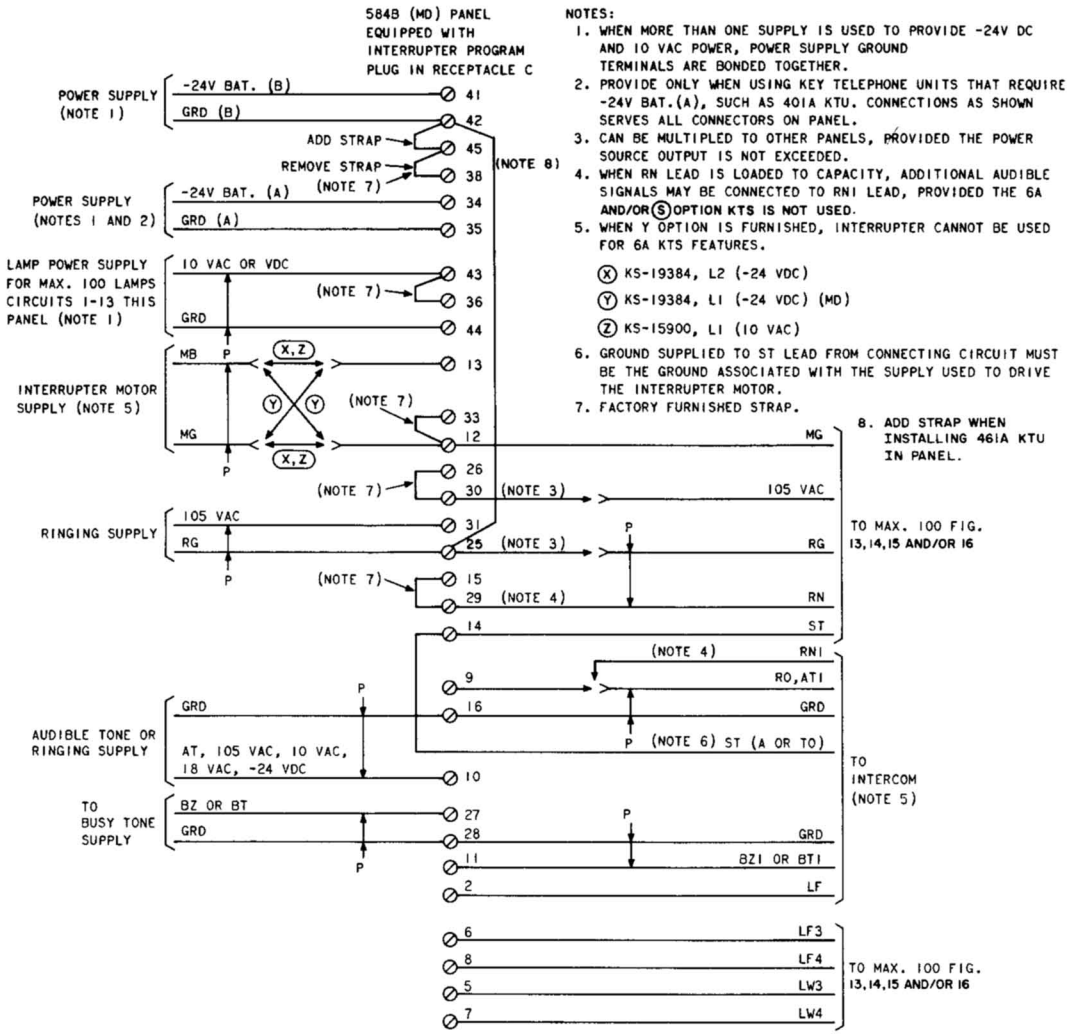

Fig. 12—584B (MD) Panel Equipped With Interrupter (Master panel used to control up to 200 other panels each equipped with 412A KTU)

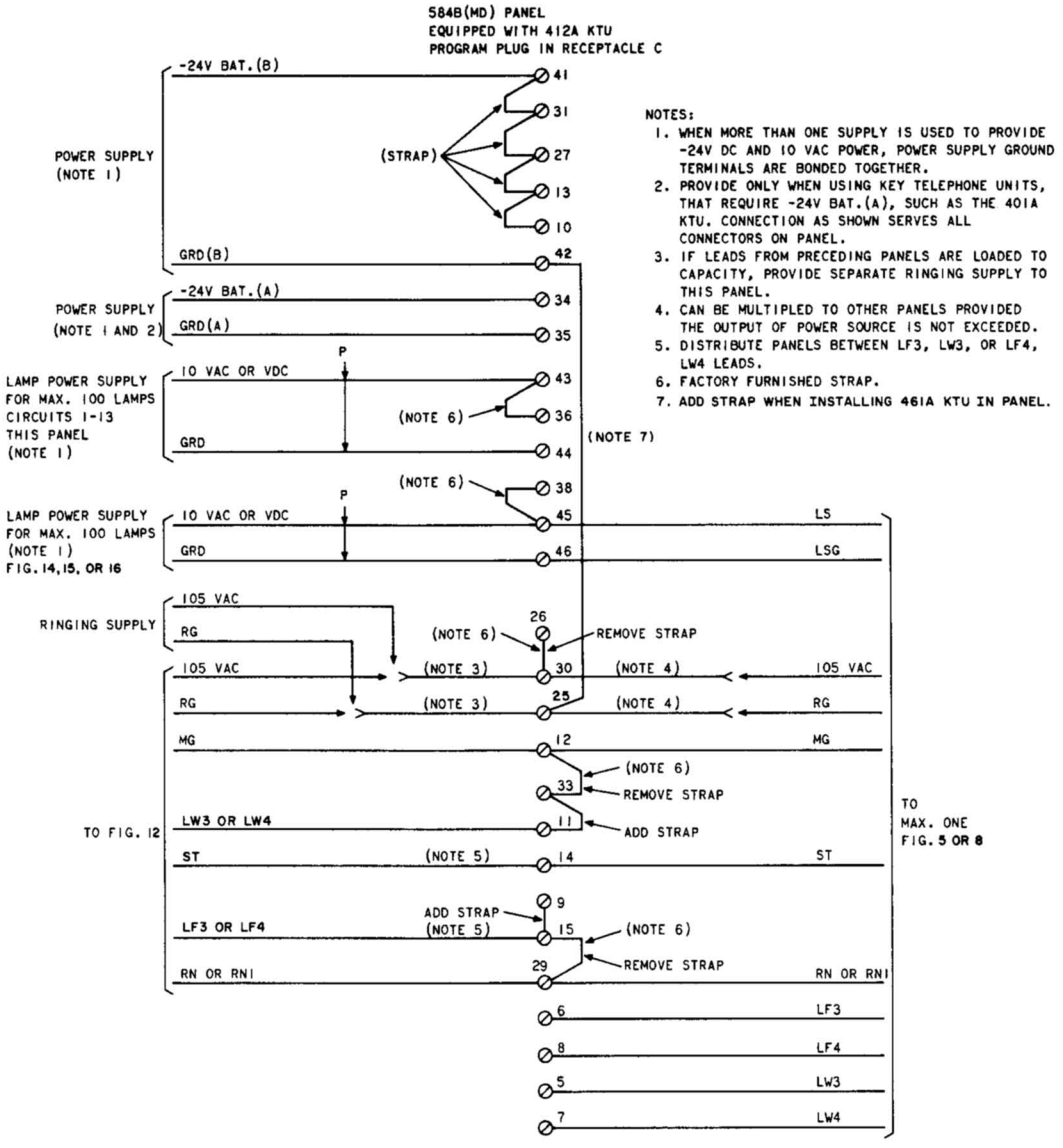

Fig. 13—584B (MD) Panel Equipped With 412A KTU (Panel used to control one other panel)

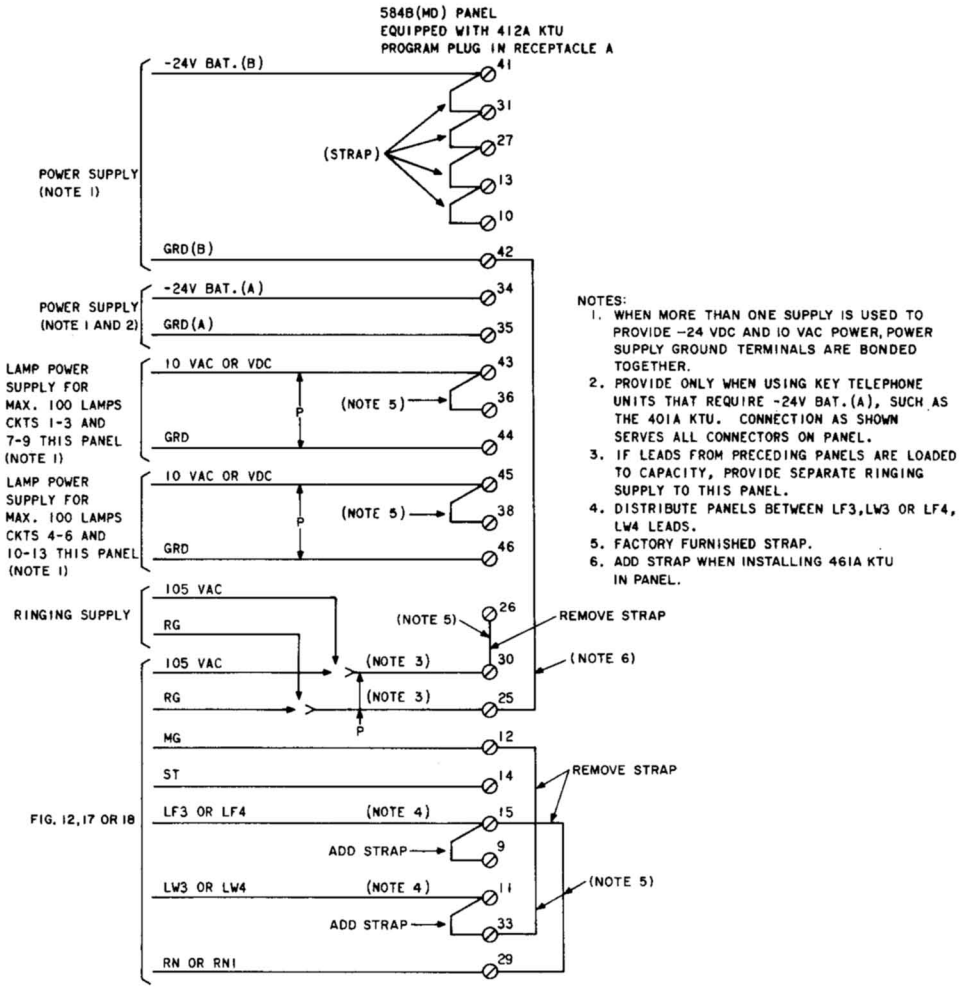

Fig. 14—584B (MD) Panel Equipped With 412A KTU (Panel not used to control other panels)

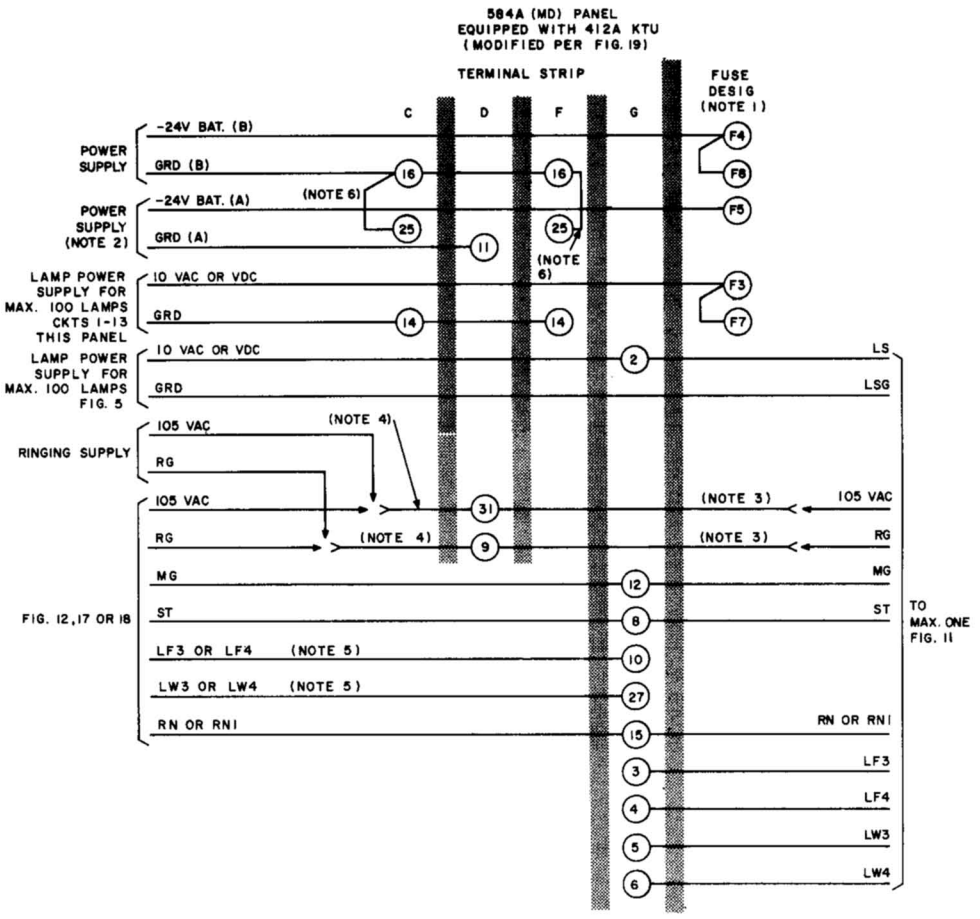

NOTES:

1. MAKE CONNECTIONS TO TERMINAL 1 OF FUSE.
2. PROVIDE ONLY WHEN USING KEY TELEPHONE UNITS THAT REQUIRE -24V BAT (A), SUCH AS THE 401A KTU. CONNECTION AS SHOWN SERVES CONNECTORS J7 AND J8 (SEE FIG. 20).
3. CAN BE MULTIPLED TO OTHER PANELS PROVIDED THE OUTPUT OF POWER SOURCE IS NOT EXCEEDED.
4. IF LEADS FROM PRECEEDING PANELS ARE LOADED TO CAPACITY, PROVIDE SEPARATE RINGING SUPPLY TO THIS PANEL.
5. DISTRIBUTE PANELS BETWEEN LF3, LW3 OR LF4, LW4 LEADS.
6. ADD STRAP WHEN INSTALLING 461A KTU IN PANEL.

Fig. 15—584A (MD) Panel Equipped With 412A KTU (Panel used alone and also to control one other panel)

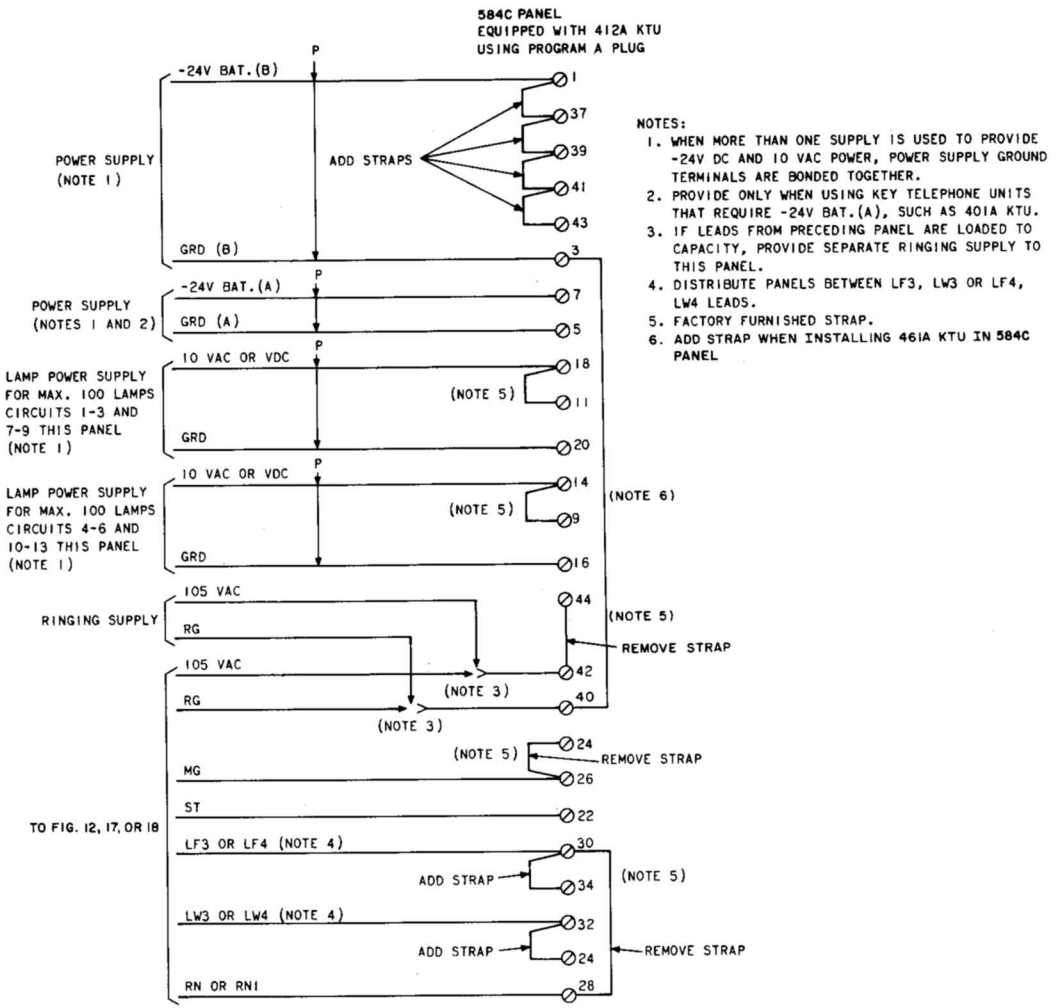

Fig. 16—584C Panel Equipped With 412A KTU (Panel not used to control other panels)

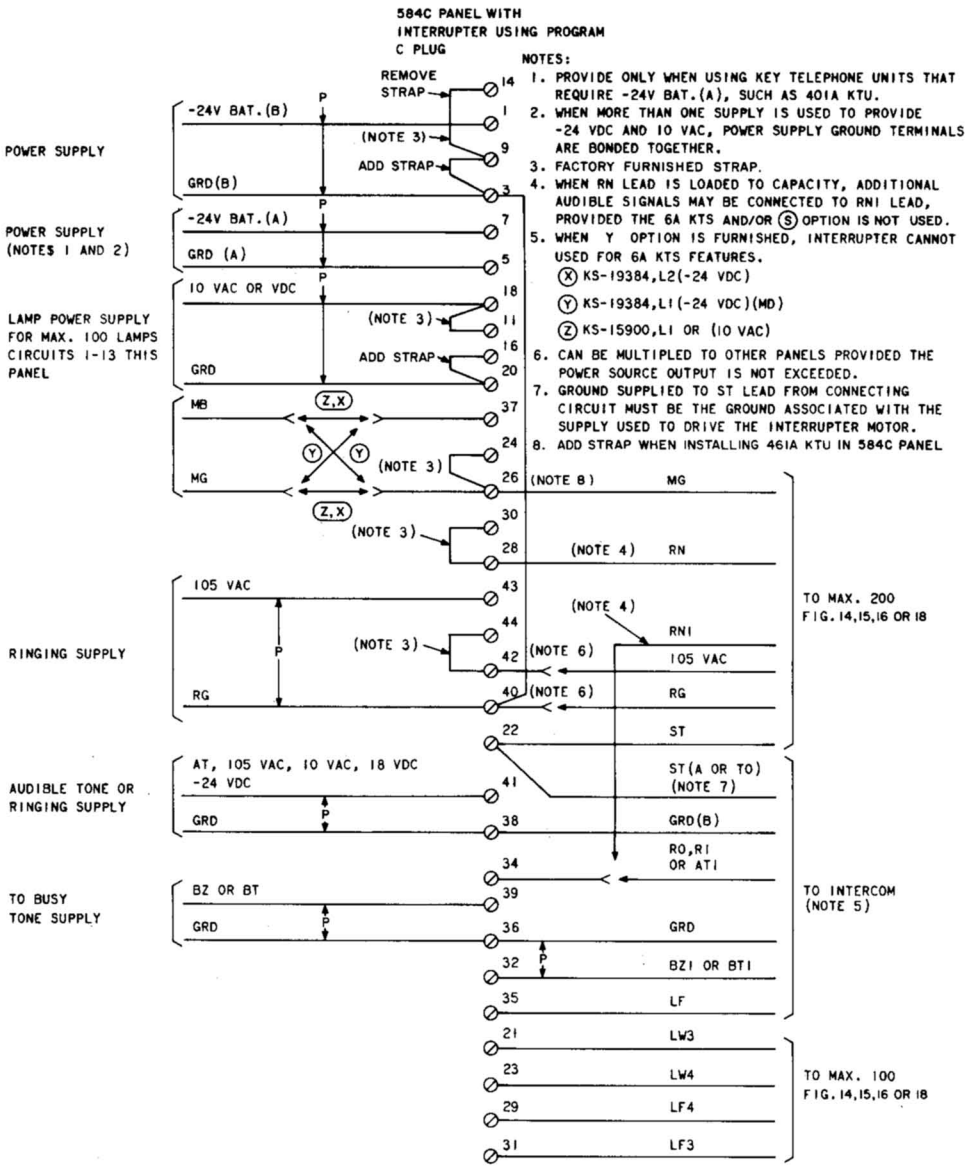

Fig. 17—584C Panel Equipped With Interrupter (Master panel used to control up to 200 other panels each equipped with 412A KTU)

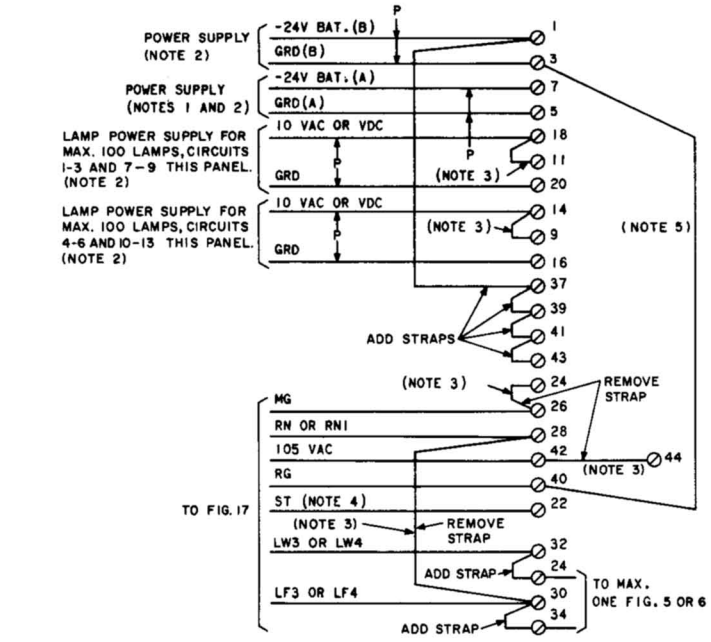

NOTES:
1. PROVIDE ONLY WHEN USING KEY TELEPHONE UNITS THAT REQUIRE -24V BAT.(A), SUCH AS THE 401A KTU.
2. WHEN MORE THAN ONE SUPPLY IS USED TO PROVIDE -24 VDC AND 10 VAC, POWER SUPPLY GROUND TERMINALS ARE BONDED TOGETHER.
3. FACTORY FURNISHED STRAP.
4. GROUND SUPPLIED TO ST LEAD FROM CONNECTING CIRCUIT MUST BE THE GROUND ASSOCIATED WITH THE SUPPLY USED TO DRIVE THE INTERRUPTER MOTOR.
5. ADD STRAP WHEN INSTALLING 461A KTU IN 584C PANEL.

Fig. 18—584C Panel Equipped With 412A KTU (Panel used to control one other panel)

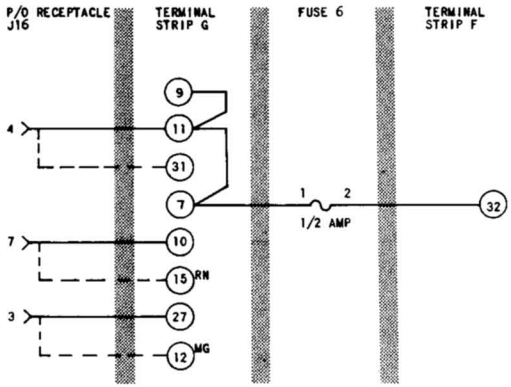

Fig. 19—Modification of 584A (MD) Panel to Accept 412A KTU

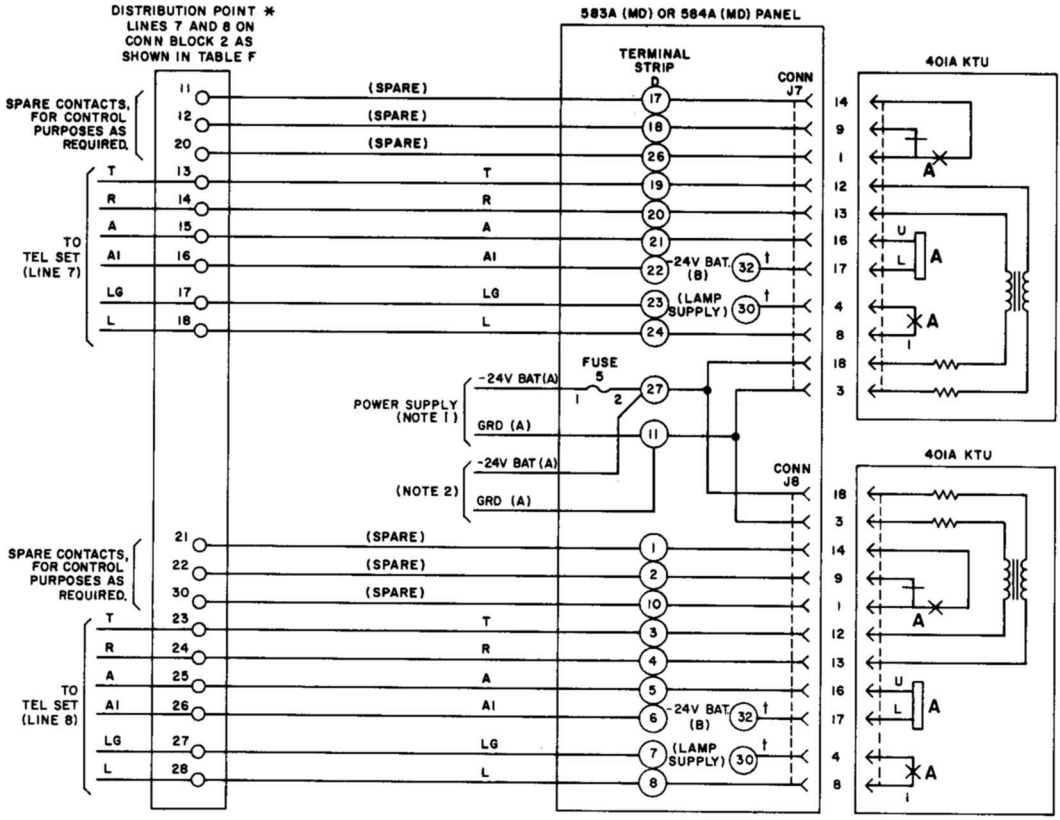

NOTES:

1. A MAXIMUM OF SIX 401A KTUS CAN BE SERVED THROUGH FUSE 5. IF ADDITIONAL 401A KTUS ARE REQUIRED, -24V BAT (A) MUST BE SUPPLIED THROUGH A SPARE FUSE.
2. IF ADDITIONAL 401A KTUS ARE REQUIRED, MULTIPLE TO ANY DESIRED TERMINAL STRIP EXCEPT TERMINAL STRIP G (CONN J13), WITHIN THE LIMITATIONS OF NOTE 1.

* A MAXIMUM OF 3 STATION CABLES OR 2 STATION CABLES AND A DISTRIBUTING CABLE CAN CONNECT DIRECTLY TO PANEL.

† FURNISHED WITH BASIC WIRING OF PANEL. FOR CLARITY, SAME TERMINAL SHOWN TWICE.

Fig. 20—Manual Intercommunication Connections for 583A (MD) and 584A (MD) Panels

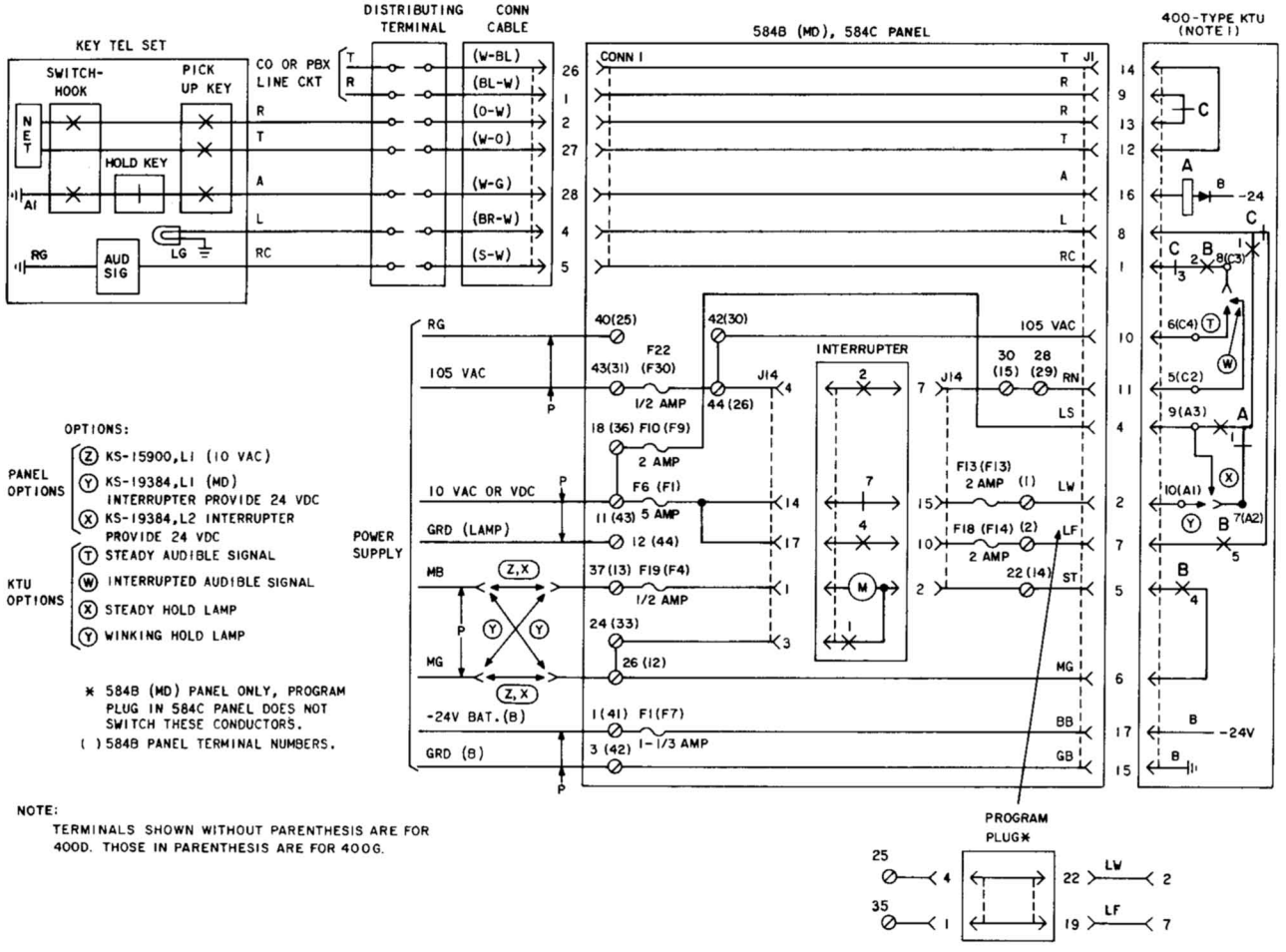

NOTE:
TERMINALS SHOWN WITHOUT PARENTHESIS ARE FOR 400D. THOSE IN PARENTHESIS ARE FOR 400G.

Fig. 21—Typical Functional Layout of 584B (MD) and 584C Panels Showing Circuit 1 Only (400D or 400G KTU)

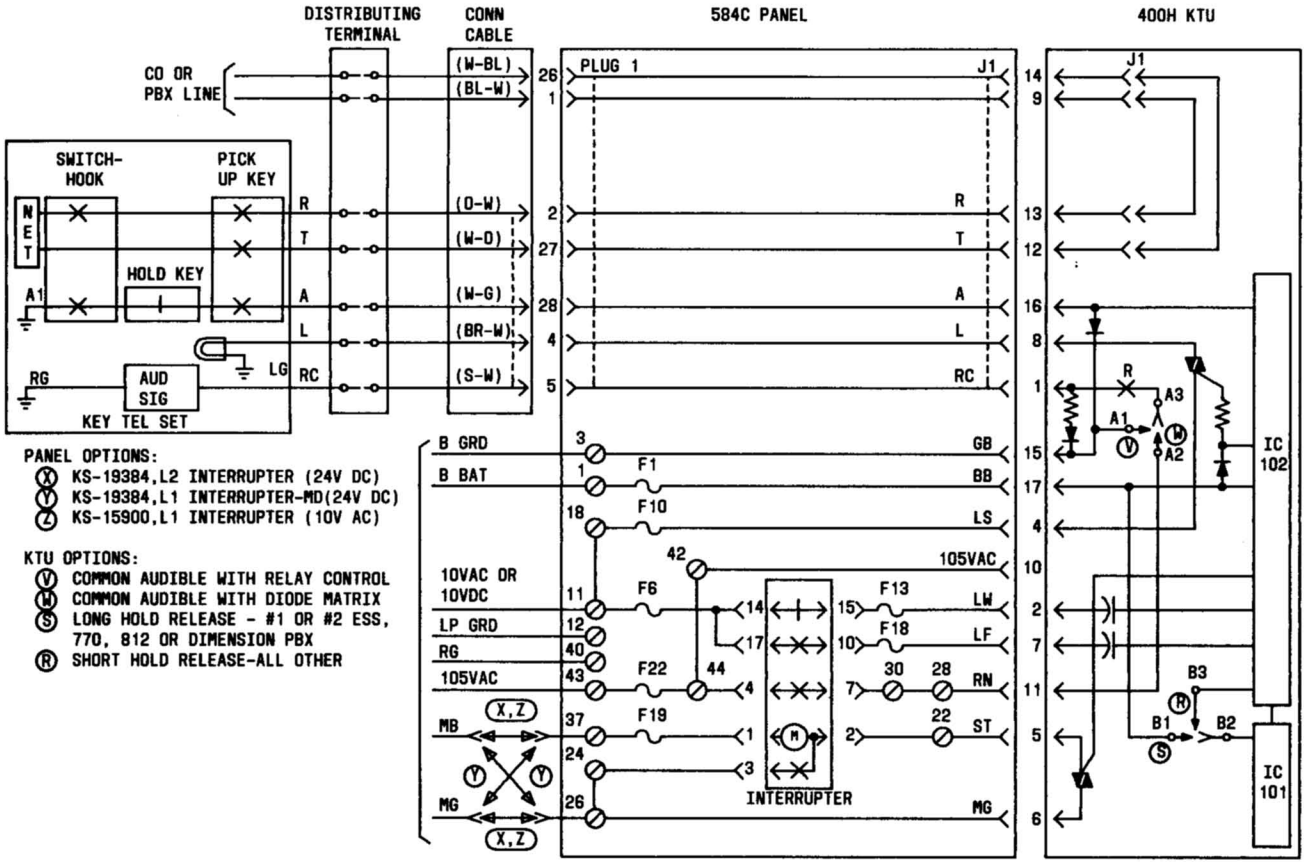

Fig. 22—Typical Functional Layout of 584C Panel Showing Circuit 1 Only (400H KTU)

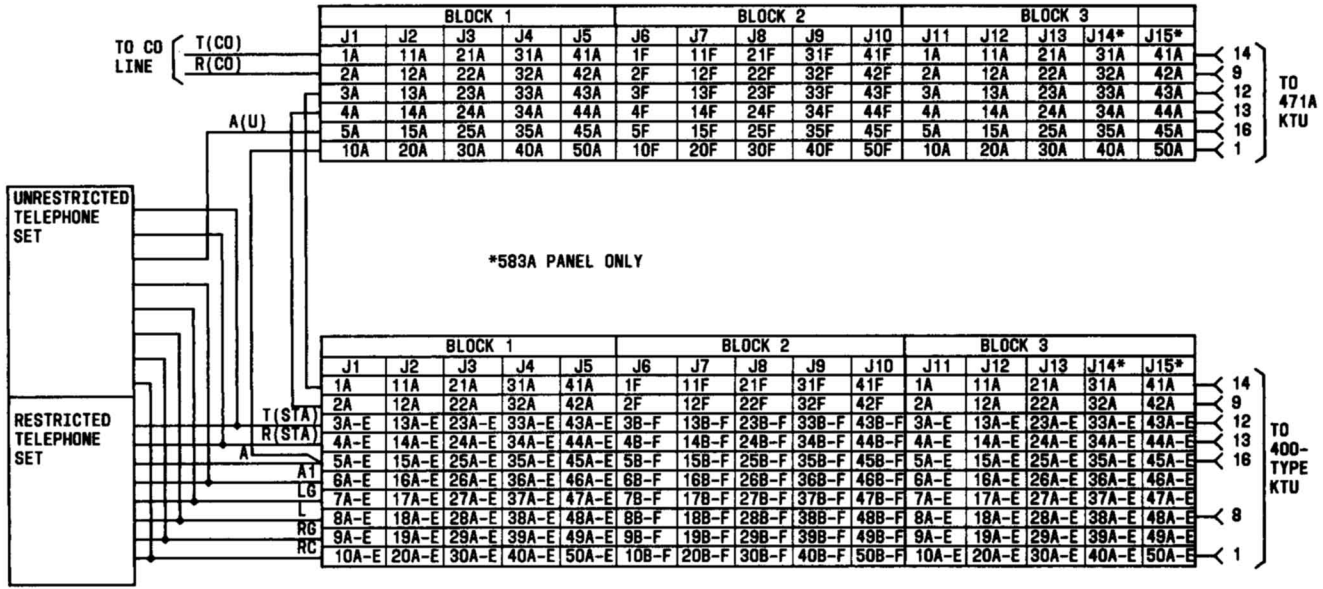

Fig. 23—Connections for 471-Type KTU in 583- or 584-Type Panel

SERVICE

597- AND 598-TYPE PANELS

IDENTIFICATION, INSTALLATION, AND CONNECTIONS

1A2 KEY TELEPHONE SYSTEM

1. GENERAL

1.01 This section provides information on the 400-series key telephone units (KTUs) used in the 597- and 598-type panels.

1.02 This section is reissued to:

- Add registration program information
- Revise all connection diagrams to associate panel connectors with connecting block terminals
- Add connections for 452A.

1.03 This issue of the section is based on drawing SD-69608-01, Issue 4. If this section is to be used with equipment or apparatus reflecting later issues of the drawing, reference should be made to the SD to determine the extent of the changes and the manner in which the section may be affected.

1.04 ⧫The 597- and 598-type panels have not been registered with the Federal Communications Commission (FCC) and cannot be installed new on any service order after January 1, 1980. Previously connected or Class C panels may be used for maintenance at grandfathered installations for the life of the equipment, provided they are not modified.⧫

2. IDENTIFICATION

2.01 ***Purpose:*** The 597-type (Fig. 1) and 598-type (Fig. 2) panels provide auxiliary mounting facilities for 20- and 40-pin (4-inch) 400-series KTUs, respectively.

2.02 ***Application:*** Large centralized installations of 1A2 Key Telephone System arrangements.

2.03 ***Ordering Guide:***

(a) ***Basic Units***

Panel, 597B (Fig. 1)

Panel, 598B (Fig. 2)

(b) ***Replaceable Components***

- Fuse, 24G (1-1/3 amperes)

(c) ***Associated Apparatus (Order Separately)***

- Block, Connecting, 66B4-25 (four required for 597-type; ten required for 598-type)
- Cable, Connector, A25B (four required for 597-type; ten required for 598-type)
- Unit, Telephone Key (as required; order per Table A).

2.04 ***Design Features:*** Both panels have essentially the same basic features, differing only in the number of connector pins provided.

(a) Each panel is 4-inches high and mounts on any frame structure designed for 23-inch wide mounting plates.

(b) Accepts up to fourteen 400-series KTUs in any combination. The KTUs may be intermixed in any connector position. See Table A.

NOTICE
Not for use or disclosure outside the
Bell System except under written agreement

(c) The 597-type panel accepts only 20-pin KTUs, and the 598-type panel accepts either 20- or 40-pin KTUs.

(d) Factory wiring is provided from the KTU connectors to the plugs, permitting the use of A25B connector cables for line and station terminations.

(e) Dedicated leads such as LF, LW, battery, ground, etc, are factory wired between the connectors and screw terminal field (TSA).

(f) Screw terminal field (TSA) for power connections and interpanel wiring.

(g) Screw terminal field (TSB on 597 type) for optional field connections.

(h) Fuse panel provided with 24G fuses for power distribution (Table B).

(i) A retainer is provided to lock the KTUs in place in the connectors.

3. INSTALLATION

3.01 For information on apparatus mountings and relay racks on which the 597- and 598-type panels can be mounted, refer to Section 463-140-100.

3.02 Install panel on relay rack or in apparatus cabinet in the usual manner.

3.03 Install 66B4-25 connecting blocks and stencil each block.

3.04 ◗Connect the A25B connector cables to the plugs on the rear of the panel and route to location of proper 66B4-25 connecting block. The panels are wired so that the nondedicated leads appear in a pair of connector cables which are terminated on one left-hand and one right-hand block. Figures 3 and 4 show the relationship between the KTU connectors, connector cables, and connecting blocks.◖

3.05 ◗The A25B connector cables are cut down on the connecting blocks as shown in Fig. 5 and 6. On the odd or left-hand blocks (1, 3, 5, 7, 9), the cable from the panel is terminated on column F, leaving columns A to E for field connections. On the even or right-hand blocks (2, 4, 6, 8, 10), the cable from the panel is terminated on column A, leaving columns B to F for field connections. Figures 5 and 6 contain a block diagram showing the path of a typical lead through the panel.◖

3.06 Dedicated lead connections for both panels are shown in Fig. 7. Fuse functions are shown in Table B. These connections should be made before installing KTUs in the panels. Dedicated leads are those leads such as BAT, GRD, LF, LW, etc, that appear on the same numbered pin of each KTU. These panels must obtain interrupted lamps and ringing signals from 583- or 584-type panel.

3.07 Install KTUs as required.

4. CONNECTIONS

4.01 If 414A or 416A KTUs are to be installed in the 597-type panel, wire G option per Fig. 8 to place ring ground on pin 0 of required connector.

4.02 Figures 9 through 56 cover the nondedicated lead connections for the 400-series KTUs that can be installed in the 597- and 598-type panels. Field connections are shown on the left, connecting block row assignments in the center, and connector pin numbers on the right. Pin numbers are shown for reference only, so that a complete picture of the KTU circuitry can be seen when the connection drawing of a KTU is compared with the functional schematic.

4.03 Field connections are made for any KTU by determining which connector on the panel is to be used and its related connecting block (Fig. 3 or 4). For example:

(a) If a 400-type KTU (Fig. 9, 10, or 11) is installed in connector J1 of a 597-type panel (Fig. 3), field connections are made to terminals 1, 2, 4, and 6 on connecting block 1 and to terminals 1, 2, 3, 4, 5, and 6 on connecting block 2.

(b) If the 400-type KTU (Fig. 9, 10, or 11) is installed in connector J14 of a 597-type panel (Fig. 3), field connections are made to terminals 37, 38, 40, and 42 on connecting block 3 and to terminals 37, 38, 39, 40, 41, and 42 on connecting block 4.

(c) If the 400-type KTU (Fig. 28, 29, or 30) is installed in connector J8 of a 598-type panel (Fig. 4), field connections are made to terminals 17, 18, 21, and 22 on connecting block 5 and to terminals 17, 18, 19, 20, 21, and 22 on connecting block 6.

CONNECTION INDEX

Fig. 5—A25B Connector Cables to 66B4-25 Connecting Blocks for 597-Type Panel

Fig. 6—A25B Connector Cables to 66B4-25 Connecting Blocks for 598-Type Panel

Fig. 7—Dedicated Leads (Signaling and Power Connections) for 597- and 598-Type Panels

Fig. 8—Wiring of Connector Terminal 0 in 597-Type Panel for G Option

Nondedicated Lead Connections for 597-Type Panel:

Fig. 9—400D KTU (MD) (CO or PBX Line Circuit)

Fig. 10—400G KTU (MD) (CO or PBX Line Circuit)

Fig. 11—400H KTU (CO or PBX Line Circuit)

Fig. 12—401A KTU (Manual Intercom Line Circuit)

Fig. 13—413A KTU (Auxiliary Ringup Circuit)

Fig. 14—414A KTU (Manual Signaling, Ringdowm Private Line Circuit)

Fig. 15—415A KTU (Automatic, DC Signaling, Private Line Circuit)

Fig. 16—416A KTU (Station Line Circuit)

Fig. 17—418A KTU (Short Range, DC Signaling, Private Line Circuit)

Fig. 18—420A KTU (Long Line Circuit)

Fig. 19—421A KTU (Power Failure Transfer Circuit)

Fig. 20—421A KTU (Audible Signal Suppression Circuit) Arranged to Suppress Bridged Ringing and Intercom Audible Signal

Fig. 21—421A KTU (Audible Signal Suppression Circuit) Arranged to Suppress Common Audible Ringing and Intercom Audible Signal

Fig. 22—423A KTU (Dial Tone, Busy Tone, and Audible Ringback Tone Circuit)

Fig. 23—430A KTU (Flutter Generator Circuit)

Fig. 24—461A KTU (Manual Signaling, Ringdown Private Line Circuit)

Fig. 25—467A KTU (Low Voltage Monitor Circuit)

Fig. 26—469A KTU (Lamp Extender Circuit)

Fig. 27—471B KTU (Battery Reversal Toll Restriction Circuit)

Nondedicated Lead Connections for 598-Type Panel:

Fig. 28—400D KTU (MD) (CO or PBX Line Circuit)

Fig. 29—400G KTU (MD) (CO or PBX Line Circuit)

Fig. 30—400H KTU (CO or PBX Line Circuit)

Fig. 31—401A KTU (Manual Intercom Line Circuit)

Fig. 32—413A KTU (Auxiliary Ringup Circuit)

Fig. 33—414A KTU (Manual Signaling, Ringdown Private Line Circuit)

Fig. 34—415A KTU (Automatic, DC Signaling, Private Line Circuit)

Fig. 35—416A KTU (Station Line Circuit)

Fig. 36—417A KTU (Add-On Conference Circuit)

Fig. 37—418A KTU (Short Range, DC Signaling, Private Line Circuit)

Fig. 38—420A KTU (Long Line Circuit)

Fig. 39—421A KTU (Power Failure Transfer Circuit)

Fig. 40—421A KTU (Wired for DSS Feature for Dial Intercom Line)

Fig. 41—421A KTU (Audible Signal Suppression Circuit) Arranged to Suppress Bridged Ringing and Intercom Audible Signal

Fig. 42—421A KTU (Audible Signal Suppression Circuit) Arranged to Suppress Common Audible Ringing and Intercom Audible Signal

Fig. 43—421A KTU or 413A KTU (Wired for Preset Conference Circuit for Deluxe Dial Intercom Line)

Fig. 44—422B KTU (Station Busy Selector Circuit)

Fig. 45—423A KTU (Dial Tone, Busy Tone, and Audible Ringback Tone Circuit)

Fig. 46—428A KTU (Multiline Exclusion Circuit)

Fig. 47—429-Type KTU (Supplementary Hold Detector Circuit) and 430A KTU (Flutter Generator Circuit)

Fig. 48—448A KTU (Variable Delay Timer Circuit)

Fig. 49—449A KTU (Immediate Transfer Control Circuit)

Fig. 50—451B KTU (Music-On-Hold)

Fig. 51—452A KTU (Power Failure Ringing Circuit)

Fig. 52—461A KTU (Manual Signaling, Ringdown Private Line Circuit)

Fig. 53—467A KTU (Low Voltage Monitor Circuit)

Fig. 54—469A KTU (Lamp Extender Circuit)

Fig. 55—471B KTU (Battery Reversal Toll Restriction Circuit)

Fig. 56—498A KTU (Music-On-Hold).

◗TABLE A◖

KTU SELECTION AND CONNECTION FIGURE INDEX FOR 597B AND 598B PANELS (SEE NOTE)

KTU	CIRCUIT FUNCTION		PANEL	
			597B	598B
			FIG.	FIG.
400D	CO or PBX Line		9	28*
400G			10	29*
400H			11	30*
401A	Manual Intercom Line		12	31*
413A	Auxiliary Ringup		13	32*
	Preset Conference for Dial Intercom Line		na	43*
414A	Manual Signaling, Ringdown Private Line		14	33*
415A	Automatic, DC Signaling, Private Line		15	34*
416A	Station Line		16	35*
417A	Add-On Conference		na	36
418A	Short Range, DC Signaling, Private Line		17	37*
420A	Long Line		18	38*
421A	Power Failure Transfer		19†	39*
	Direct Station Selection (DSS)		na	40
	Audible Signal Suppression	Bridged Ringing	20	41*
		Common Audible	21	42*
	Preset Conference for Dial Intercom		na	43
422A, B	Station Busy Selector		na	44
423A	Dial Tone, Busy Tone, and Audible Ringback Tone		22	45*
428A	Multiline Exclusion		na	46
429A, B	Supplementary Hold Detector		na	47
430A	Flutter Generator		23	47*
448A	Variable Delay Timer		na	48
449A	Immediate Transfer Control		na	49
451B	Music-On-Hold		na	50
498A			na	56

◗ TABLE A (Contd) ◖

KTU SELECTION AND CONNECTION FIGURE INDEX FOR 597B AND 598B PANELS (SEE NOTE)

KTU	CIRCUIT FUNCTION	PANEL	
		597B	598B
		FIG.	FIG.
452A	Power Failure Ringing	na	51
461A	Manual Signaling, Ringdown Private Line	24	52*
467A	Low Voltage Monitor	25	53*
469A	Lamp Extender	26	54*
471B	Battery Reversal Toll Restriction	27	55*

Note: Connection figures are designated for current model KTUs but are applicable for all codes indicated on this table.

* Not recommended for initial installations; use for growth only when necessary.

† Will transfer only one circuit.

na—Not applicable.

TABLE B

FUSE FUNCTIONS FOR 597- AND 598-TYPE PANELS

CONN SERVED	A BAT.	B BAT.
J1-7	F1	F3
J8-14	F2	F4

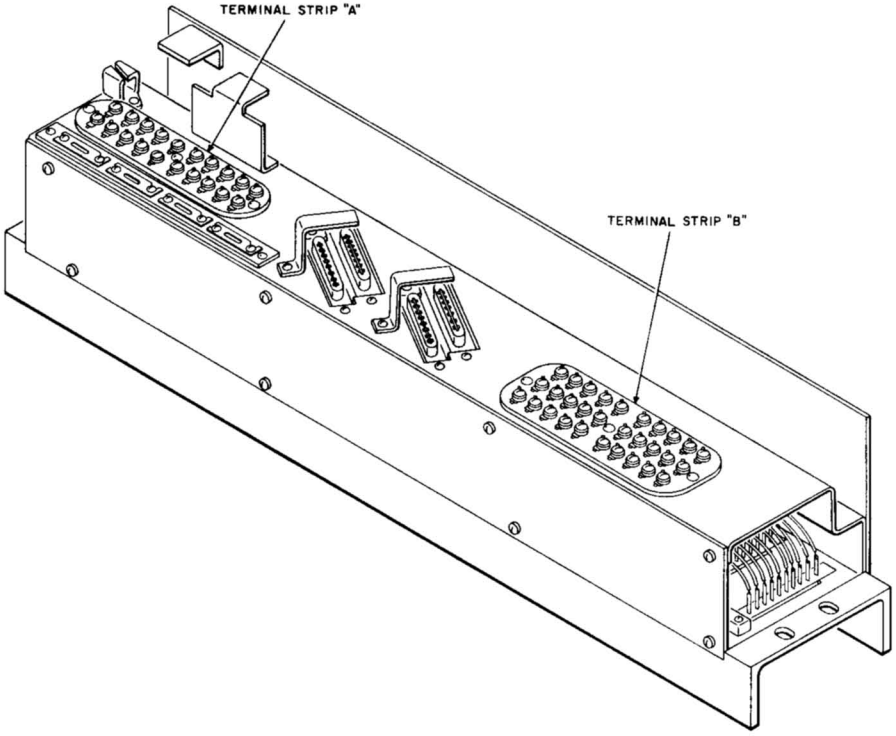

Fig. 1—597-Type Panel

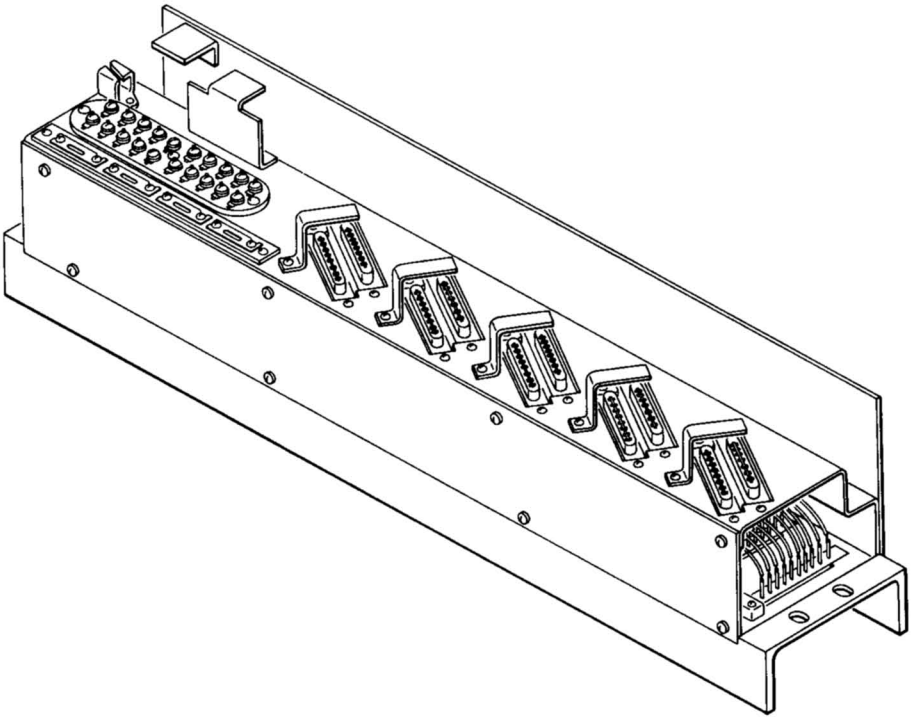

Fig. 2—598-Type Panel

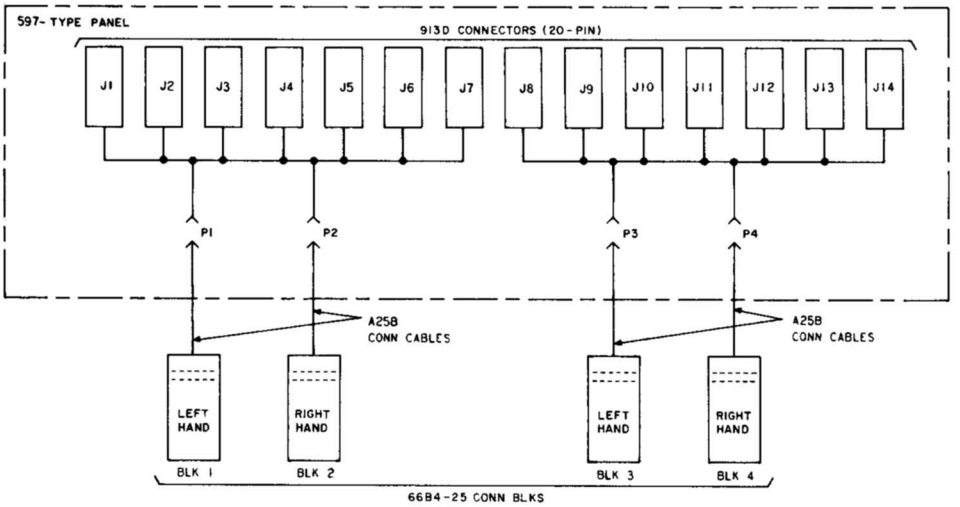

Fig. 3—◗597-Type Panel With Connecting Block Layout◖

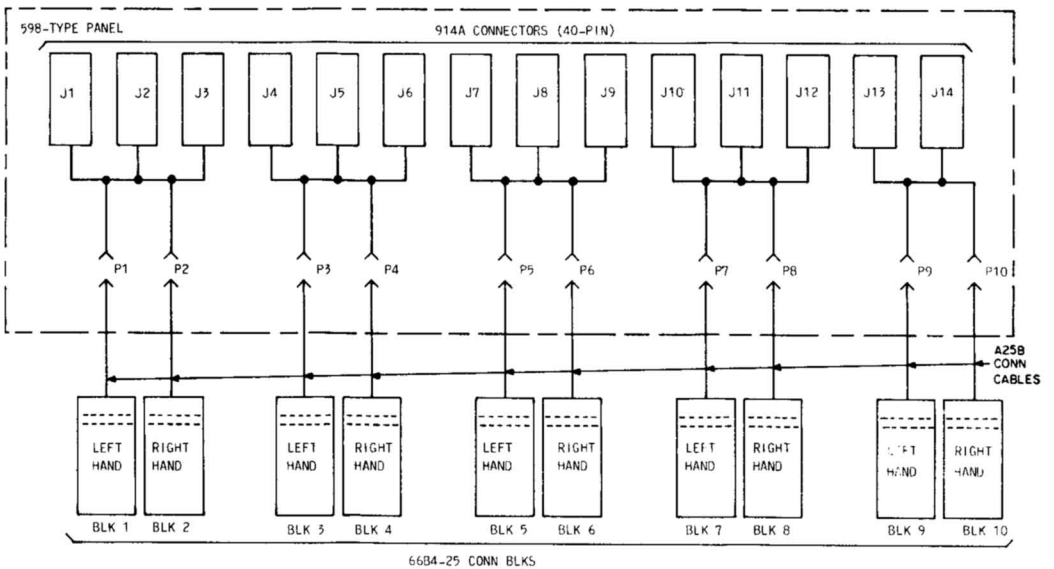

Fig. 4—◗598-Type Panel With Connecting Block Layout◖

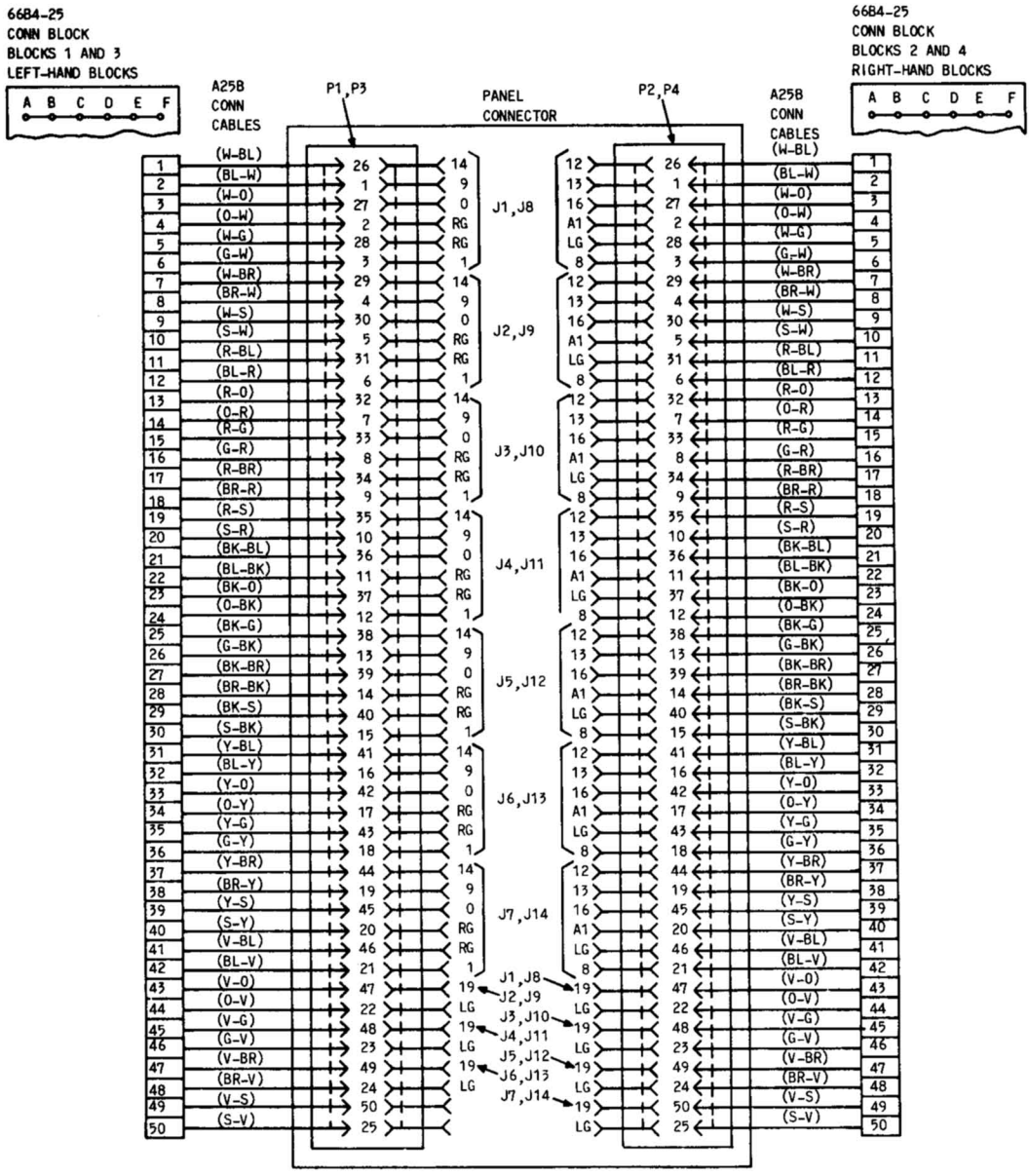

Fig. 5—Connections for A25B Connector Cables to 66B4-25 Connecting Blocks for 597-Type Panel (Sheet 1 of 2)

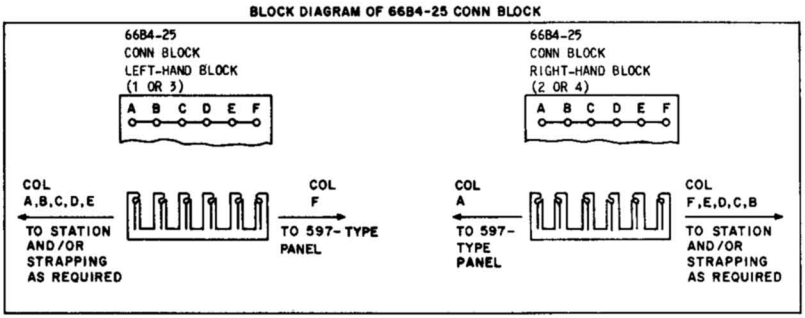

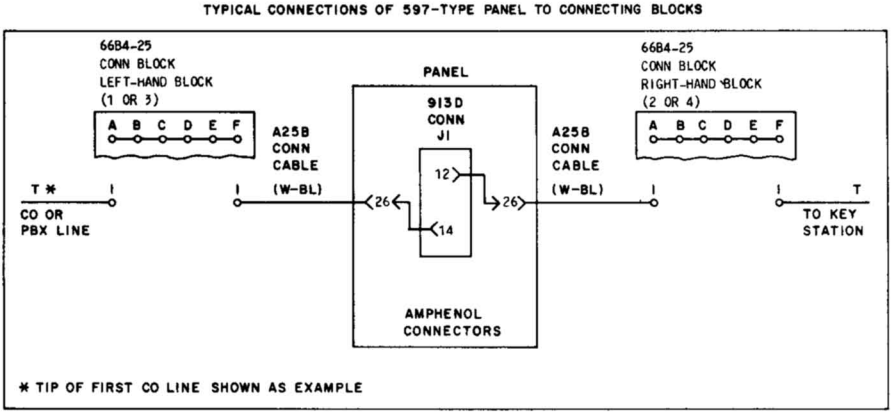

Fig. 5—Connections for A25B Connector Cables to 66B4-25 Connecting Blocks for 597-Type Panel (Sheet 2 of 2)

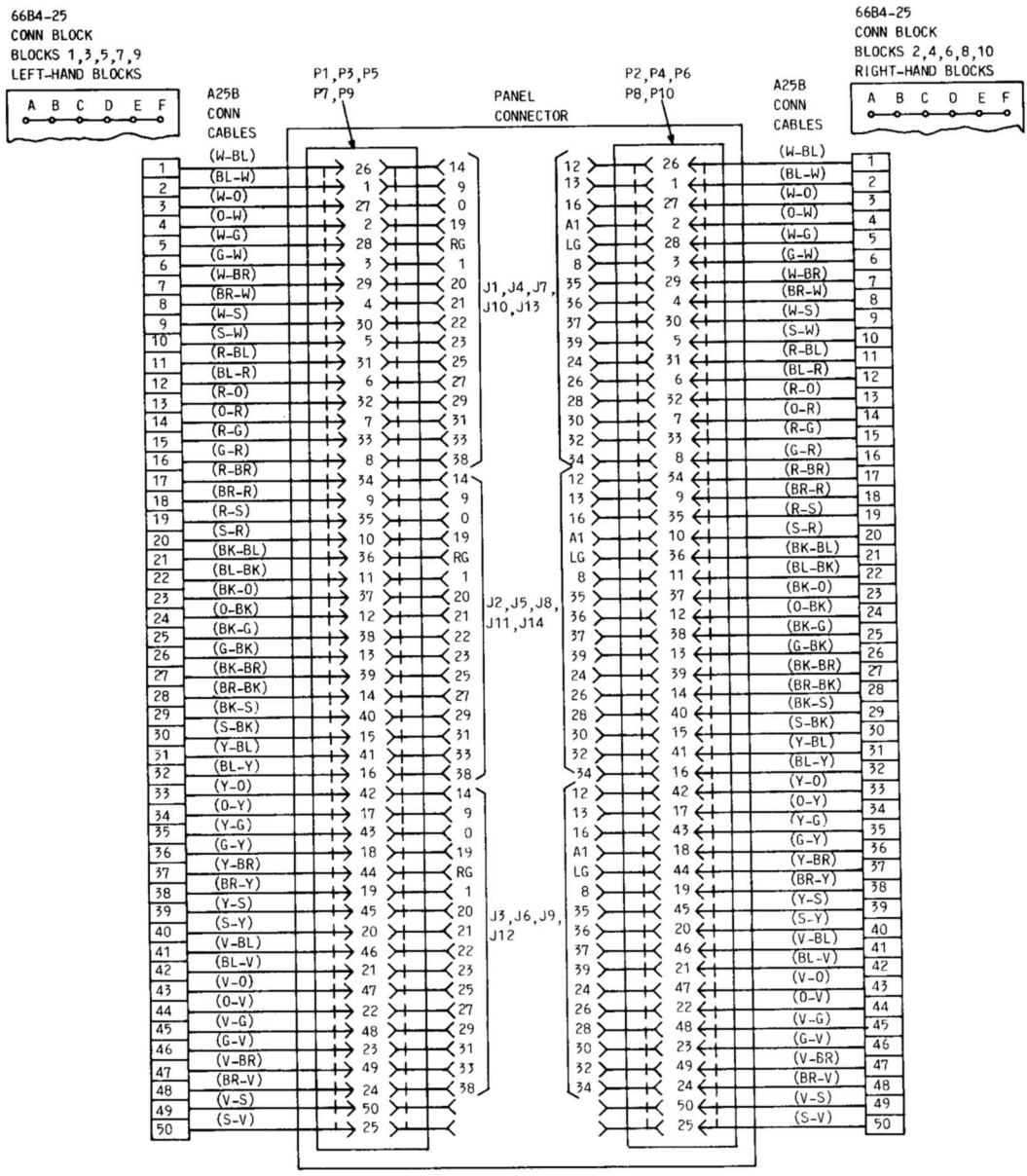

Fig. 6—Connections for A25B Connector Cables to 66B4-25 Connecting Blocks for 598-Type Panel (Sheet 1 of 2)

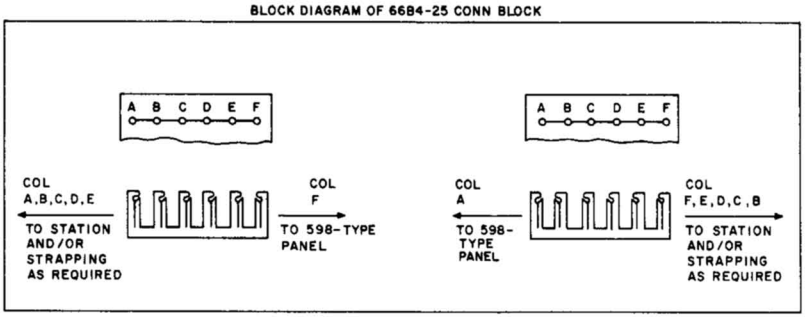

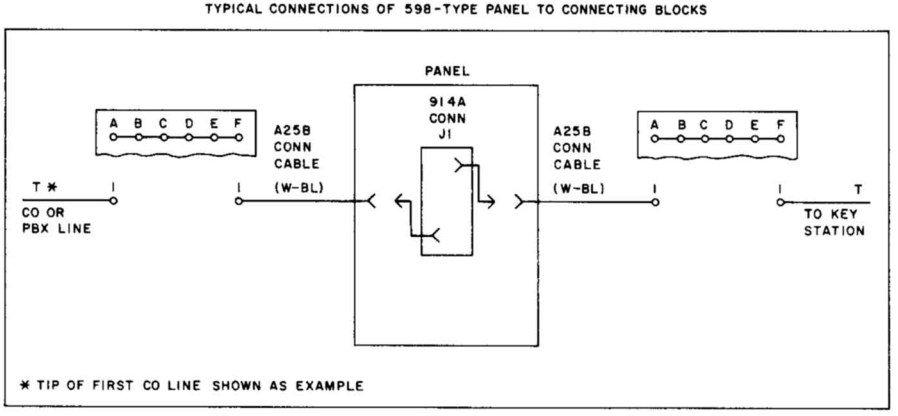

NOTE:
TERMINALS 33 THROUGH 48 ARE SPARES ON CONNECTING BLOCKS 9 AND 10.

Fig. 6—Connections for A25B Connector Cables to 66B4-25 Connecting Blocks for 598-Type Panel (Sheet 2 of 2)

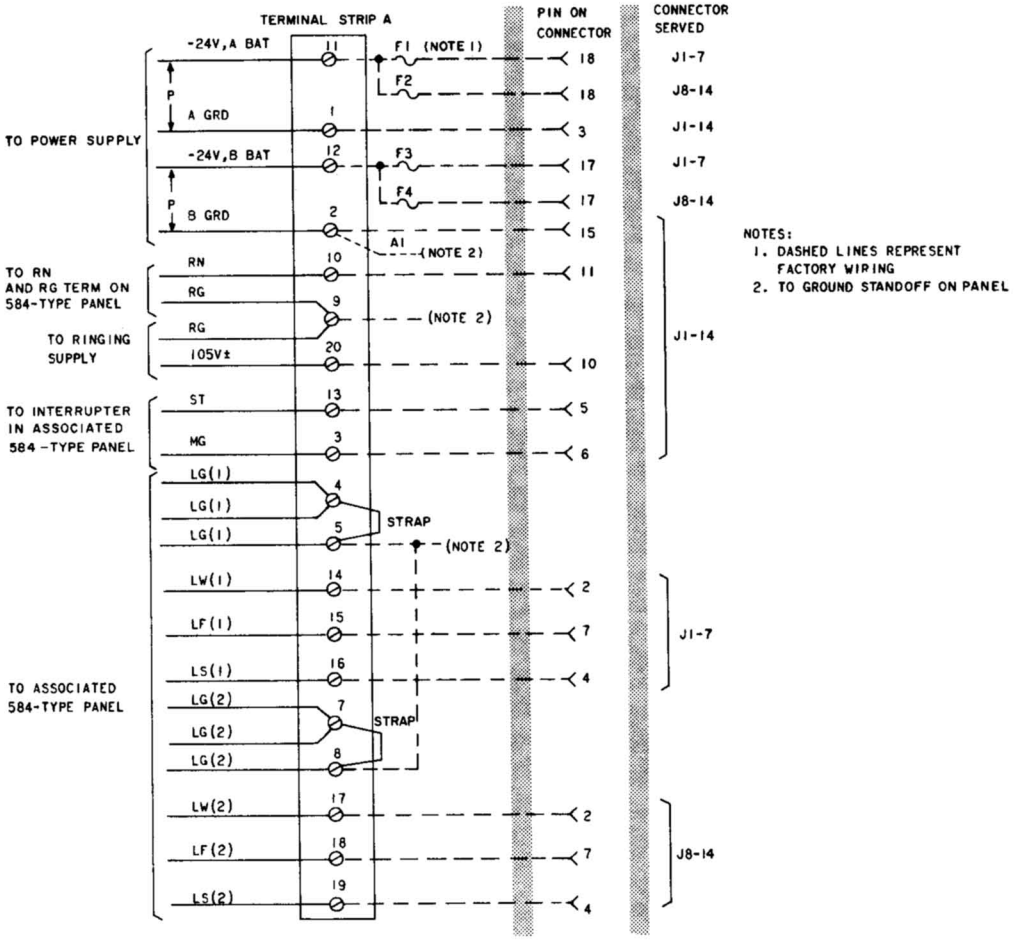

Fig. 7—Connections for Dedicated Leads (Signaling and Power Connections) for 597- and 598-Type Panels

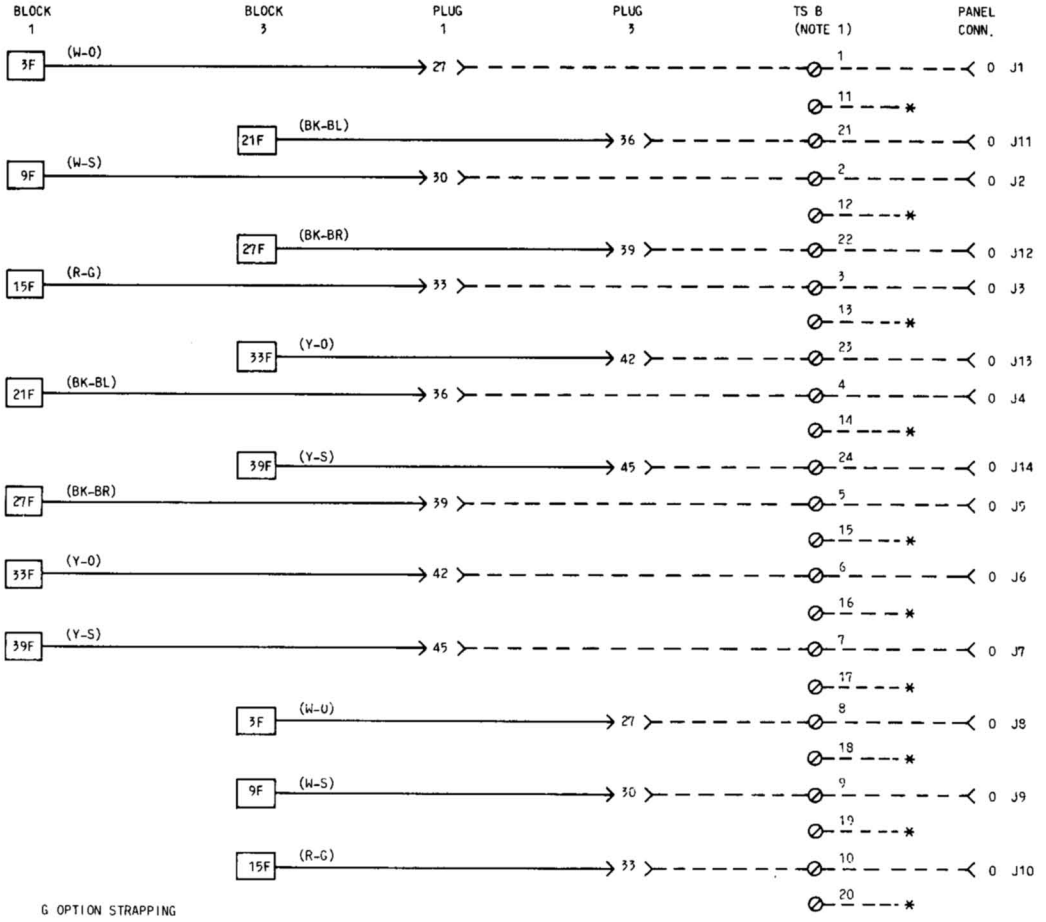

G OPTION STRAPPING
TS B

CONN	PLACE STRAP
J1	1 TO 11
J2	2 TO 12
J3	3 TO 13
J4	4 TO 14
J5	5 TO 15
J6	6 TO 16
J7	7 TO 17
J8	8 TO 18
J9	9 TO 19
J10	10 TO 20
J11	11 TO 21
J12	12 TO 22
J13	13 TO 23
J14	14 TO 24

* TO RING GROUND MULTIPLE

NOTES:
1. TERMINALS 25 THRU 30 ARE SPARE
2. DASHED LINES INDICATE FACTORY WIRING
3. WHEN INSTALLING A 414A OR 416A KTU IN A 597-TYPE PANEL, ADD OPTION G TO DESIRED CONNECTOR PER TABLE.

Fig. 8—Wiring of Connector Terminal 0 in 597-Type Panel for G Option

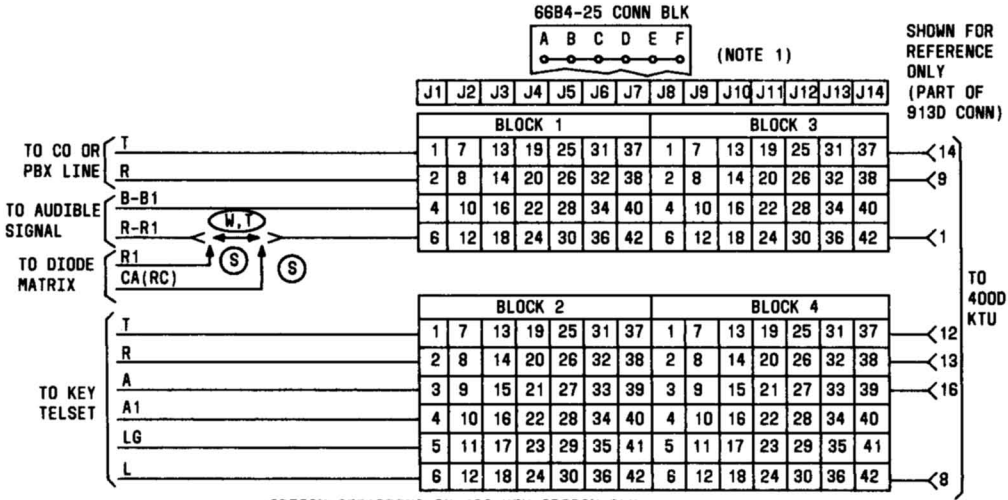

OPTION STRAPPING ON 400 KTU OPTION BLK

FEATURES		OPTION	400A,B,C	400D
AUDIBLE SIGNALS	INTERRUPTED RING	W	5 TO 6	5 TO 8
	STEADY RING	T	4 TO 6	6 TO 8
	COMMON WITH DIODE MATRIX CONTROL	S	5 TO 6	5 TO 8
VISUAL HOLD CIRCUIT	LAMP WINK	Y	8 TO 9	10 TO 7
	LAMP STEADY	X	7 TO 9	7 TO 9
TIME-OUT CONTROL	SHORT TIME DELAY (10 SECONDS)	Z*	1 TO 2	1 TO 2
	LONG TIME DELAY	†	†	
RELEASE OF HOLDING BRIDGE FROM CO OR PBX LINE CURRENT OPENS GREATER THAN	500 MILLISECONDS WHEN ASSOCIATED WITH NO. 1 ESS HAVING RESWITCH CAPABILITY	ZC (NOTE 2)	2 TO 3 USING 601A (5 UF) CAPACITOR OR EQUIVALENT	
	100 MILLISECONDS WHEN ASSOCIATED WITH 800A PBX AND/OR NO. 5 X-BAR CENTREX NOT HAVING AUTOMATIC PERMANENT SIGNAL RELEASE	ZD	2 TO 3 USING 575C (1 UF) CAPACITOR OR EQUIVALENT	
	50 MILLISECONDS WHEN ASSOCIATED WITH NO. 5 X-BAR CENTREX HAVING AUTOMATIC PERMANENT SIGNAL RELEASE	ZJ	2 TO 3 USING 575B (0.5 UF) CAPACITOR OR EQUIVALENT	

* TO PROVIDE TIME-OUT CYCLES OF RING-UP CIRCUITS FROM 2.5 TO 7.5 SECONDS, INSTALL KS-13490,L1,1 WATT OR EQUIVALENT RESISTOR BETWEEN TERMINALS 1 AND 3 WITH A STRAP FROM 1 TO 2. TIME-OUT CYCLE AND RESISTOR VALUES ARE AS FOLLOWS
- 2.5 SECONDS - 0.13 MEGOHM RESISTOR
- 3.3 SECONDS - 0.20 MEGOHM RESISTOR
- 5.0 SECONDS - 0.39 MEGOHM RESISTOR
- 6.7 SECONDS - 0.75 MEGOHM RESISTOR
- 7.5 SECONDS - 1.2 MEGOHM RESISTOR

† FOR 30-SECOND TIME-OUT CYCLE REMOVE ALL STRAPS FROM TERMINALS 1, 2, AND 3. WHEN THE DURATION OF MACHINE RINGING IS 1 SECOND OR LESS, TIME-OUT SHALL NOT BE REDUCED BELOW 5 SECONDS.

NOTES:
1. COLUMN ASSIGNMENT FOR LEFT-HAND BLK (1 OR 3) IS A-E AND FOR RIGHT-HAND BLK (2 OR 4) IS F-B.
2. WHEN ZC OPTION IS USED, DUE TO THE DELAYED RELEASE OF THE HOLD BRIDGE, SOME TRANSMISSION LOSS IS ENCOUNTERED FOR APPROXIMATELY ONE SECOND WHEN STATION REENTERS A HELD CALL.

Fig. 9—Connections for 400D KTU (MD) (CO or PBX Line Circuit) in 597-Type Panel

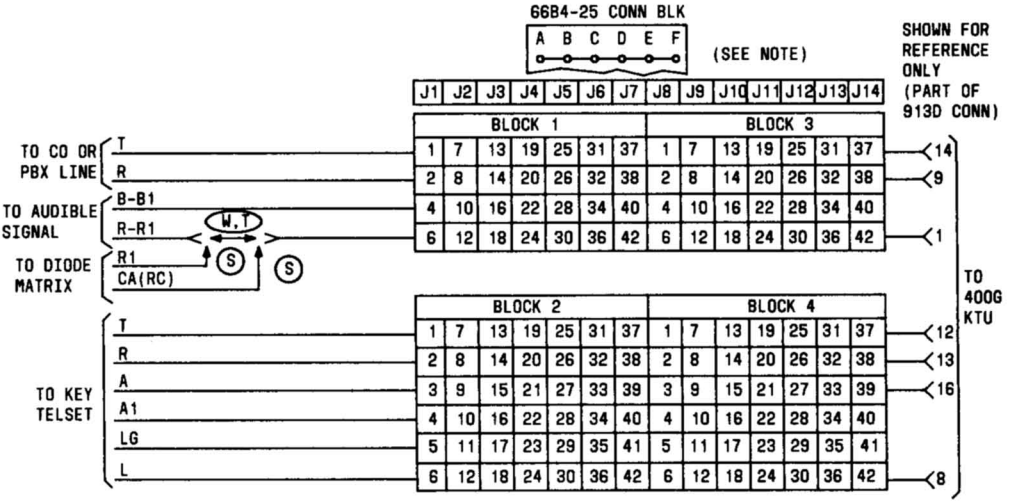

NOTES:
COLUMN ASSIGNMENT FOR LEFT-HAND BLK (1 OR 3) IS A-E AND FOR RIGHT-HAND BLK (2 OR 4) IS F-B.

OPTION STRAPPING

OPT	FEATURES		
M	TIMEOUT	LONG TIME DELAY (APPROXIMATELY 20 SECONDS)	
Z		SHORT TIME DELAY (APPROXIMATELY 5 SECONDS)	
Y	VISUAL	LAMP WINK	
X	HOLD CKT	LAMP STEADY	
W	AUDIBLE SIGNAL	INTERRUPTED RING	
T		STEADY RING	
S		COMMON WITH DIODE MATRIX CONTROL	
V		COMMON WITH RELAY CONTROL	
R	DELAYED HOLD RELEASE	RELEASE OF HOLDING BRIDGE FROM CO OR PBX BY LINE CURRENT OPENS	MINIMUM OF 25 MS
K			600 MS

OPTION	CONNECT OPTION PLUG TO TERMINALS
Z	B2-B3
Y	A1-A2
X	A2-A3
T	C3-C4
W	C2-C3
V	C1-C3
R	E2-E3
K	E1-E2
M	B1-B2

TOP VIEW OF OPTION BLOCK WITH HANDLE TOWARD USER. OPTION SYMBOLS SHOWN CONNECTED TO TERMINALS INDICATE FACTORY PROVIDED OPTIONS.

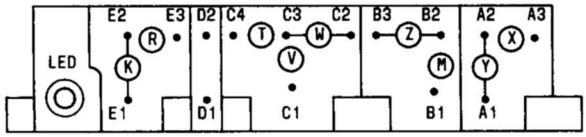

Fig. 10—Connections for 400G KTU (MD) (CO or PBX Line Circuit) in 597-Type Panel

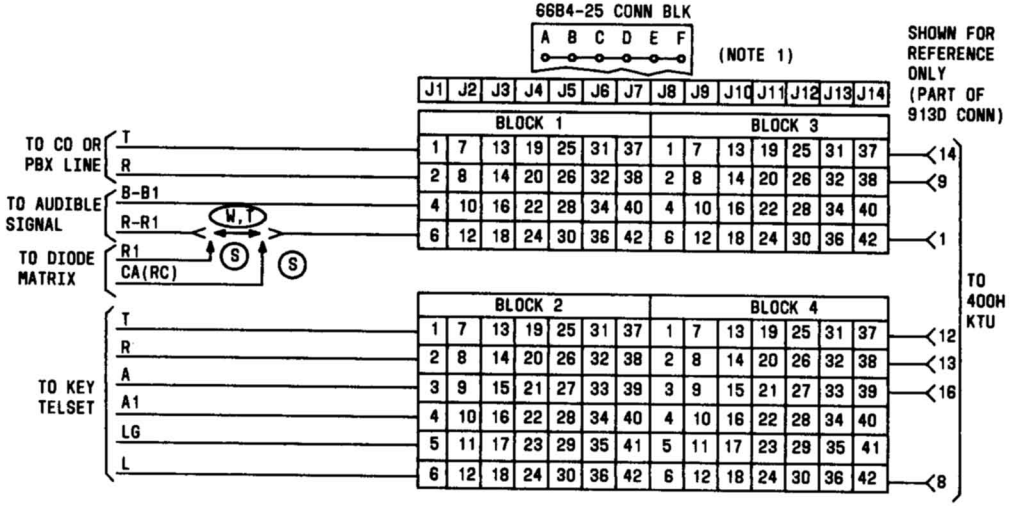

OPTION	FEATURE	PLUG POSITION
W	INTERRUPTED RING	A2-A3*
V	COMMON AUDIBLE WITH RELAY CONTROL	A1-A3
X	COMMON AUDIBLE WITH DIODE MATRIX	A2-A3*
S	LONG HOLD RLS #1 ESS, #2 ESS, 812 770, DIMENSION PBX	B1-B2*
R	SHORT HOLD RLS ALL OTHERS	B2-B3

* FACTORY PROVIDED

NOTES:
1. COLUMN ASSIGNMENT FOR LEFT-HAND BLK (1 OR 3) IS A-E AND FOR RIGHT-HAND BLK (2 OR 4) IS F-B.
2. RING TIMEOUT IS NOT ADJUSTABLE; OCCURS IN 5 TO 8-1/2 SECONDS.

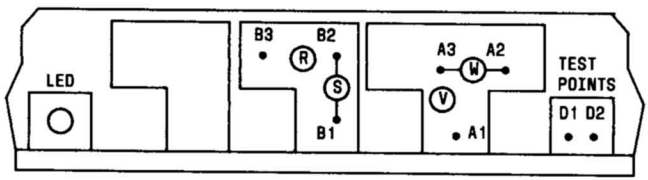

TOP VIEW OF OPTION-HANDLE ASSEMBLY. OPTION SYMBOLS SHOWN CONNECTED ARE FACTORY-INSTALLED OPTIONS.

Fig. 11—Connections for 400H KTU (CO or PBX Line Circuit) in 597-Type Panel

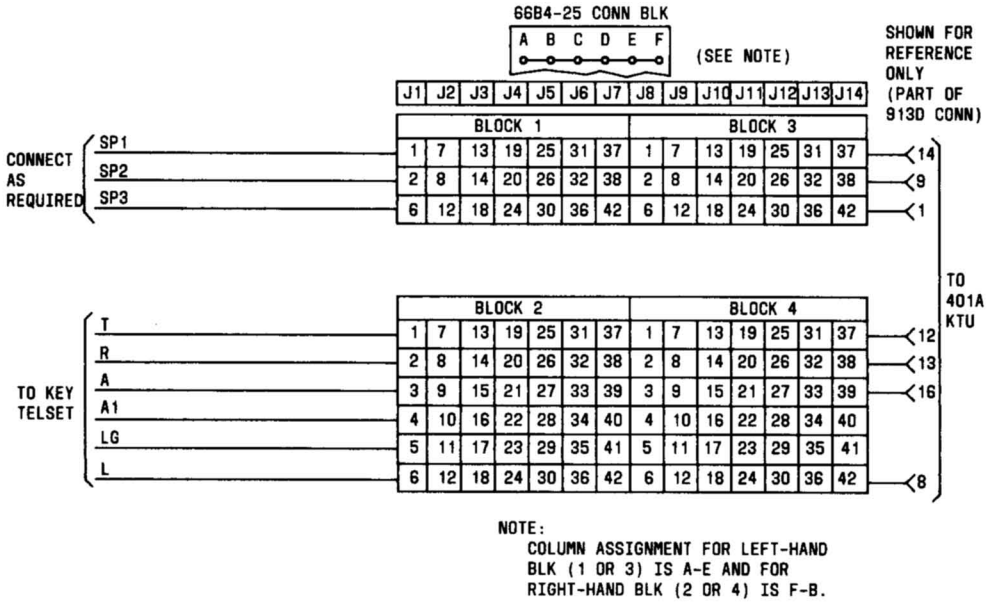

Fig. 12—Connections for 401A KTU (Manual Intercom Line Circuit) in 597-Type Panel

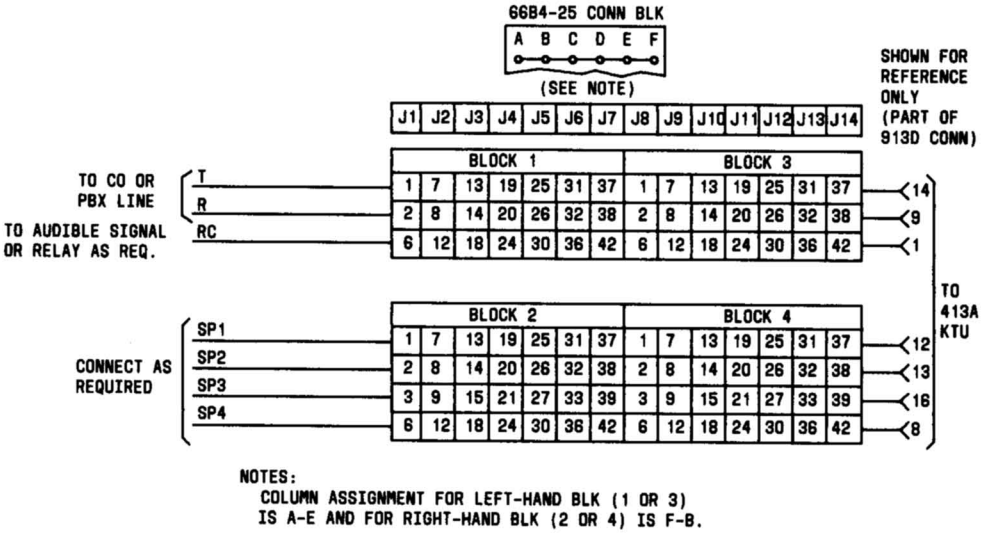

NOTES:
COLUMN ASSIGNMENT FOR LEFT-HAND BLK (1 OR 3) IS A-E AND FOR RIGHT-HAND BLK (2 OR 4) IS F-B.

* OPTION STRAPPING ON 413A KTU OPTION BLK

FEATURES		OPTION	STRAP TERMINALS
AUDIBLE SIGNALS	STEADY RING	X	9 TO 10
	INTERRUPTED RING	Z	8 TO 10

Fig. 13—Connections for 413A KTU (Auxiliary Ringup Circuit) in 597-Type Panel

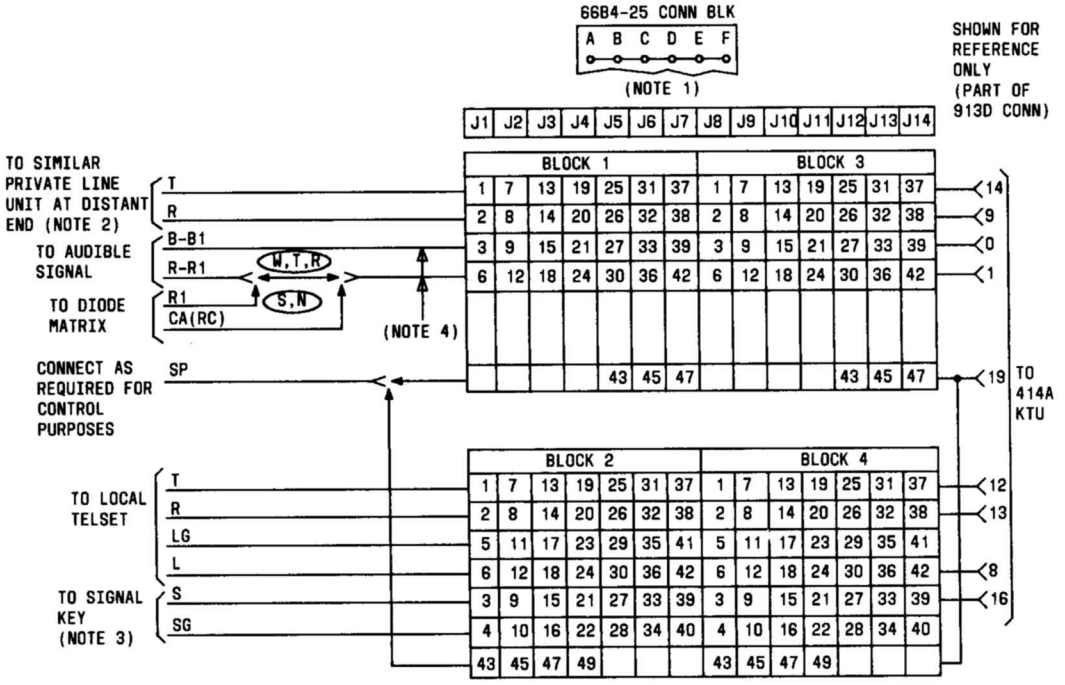

OPTION STRAPPING ON 414A KTU (MD) OPTION BLK

FEATURES			OPTIONS	STRAP TERMINALS
AUDIBLE SIGNALS	UNDER CONTROL OF TIME-OUT CIRCUIT (B RELAY)	INTERRUPTED RING	W	7 TO 8
		STEADY RING	T	6 TO 7
		COMMON WITH DIODE MATRIX CONTROL	S	7 TO 8
	UNDER CONTROL OF R RELAY	STEADY RING	R	4 TO 6
		COMMON WITH DIODE MATRIX CONTROL	N	
TIME-OUT	10 SECONDS		X	1 TO 2
	16 SECONDS		Z	2 TO 3
	23 SECONDS		WITHOUT X OR Z	REMOVE X OR Z STRAPS
AUDIBLE RINGBACK TONE			M	9 TO 10

NOTES:
1. COLUMN ASSIGNMENT FOR LEFT-HAND BLK (1 OR 3) IS A-E AND FOR RIGHT-HAND BLK (2 OR 4) IS F-B.
2. PRIVATE LINE CIRCUIT AT DISTANT END MAY BE A 414A KTU (MD), 419A KTU, 461A KTU, OR ANY OTHER TYPE PRIVATE LINE UNIT REQUIRING RINGING VOLTAGE FOR THE RING UP CIRCUIT AND FURNISHING RINGING VOLTAGE FROM THE SIGNALING CIRCUIT.
3. SIGNAL KEY MAY BE A CONVERTED PICKUP KEY OR AN EXTERNAL NON LOCKING KEY.
4. SEE FIG. 8 CONNECTIONS TO BE MADE ON OPTION TERMINAL STRIP B (Ⓖ OPTION).

Fig. 14—Connections for 414A KTU (Manual Signaling, Ringdown Private Line Circuit) in 597-Type Panel

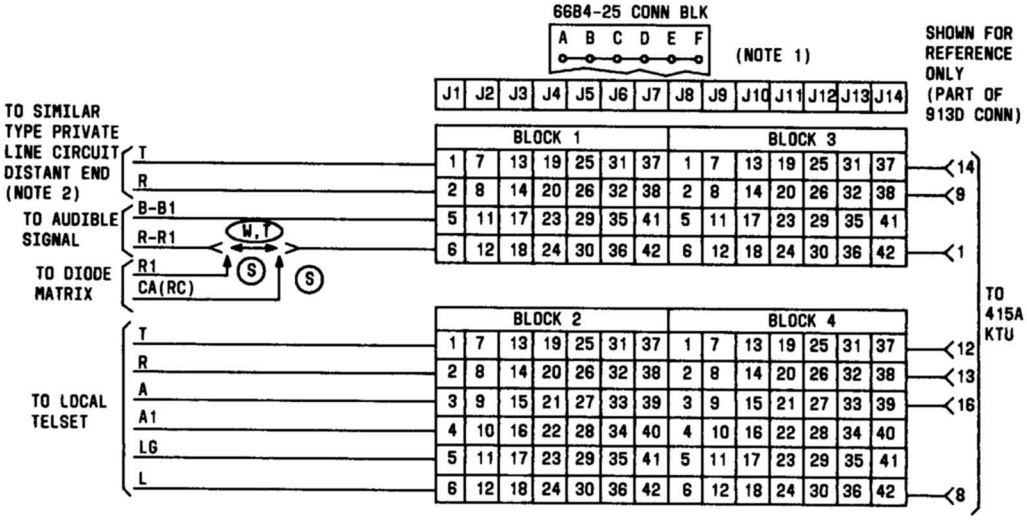

* OPTION STRAPPING ON 415A KTU OPTION BLK

FEATURES		OPTION	STRAP TERMINALS
AUDIBLE SIGNALS	INTERRUPTED RING	W	4 TO 6
	STEADY RING	T	5 TO 6
	COMMON WITH DIODE MATRIX CONTROL	S	4 TO 6
AUDIBLE RINGBACK TONE		M	1 TO 2
VISUAL HOLD SIGNAL		Y	7 TO 8

NOTES:

1. COLUMN ASSIGNMENT FOR LEFT-HAND BLK (1 OR 3) IS A-E AND FOR RIGHT-HAND BLK (2 OR 4) IS F-B.
2. PRIVATE LINE CIRCUIT AT DISTANT END MAY BE A 415A KTU OR ANY OTHER TYPE PRIVATE LINE UNIT REQUIRING DC VOLTAGE FOR THE RING UP CIRCUIT AND FURNISHING DC VOLTAGE FROM THE SIGNALING CIRCUIT.

* -FOR IDLE LINE TERMINATION CONNECT A KS-13490,L1 910 OHM RESISTOR IN SERIES WITH A 542F, 2 μF CAPACITOR ACROSS TERMINALS 9 AND 10. ORDER COMPONENTS LOCALLY AND INSTALL.

Fig. 15—Connections for 415A KTU (Automatic, DC Signaling, Private Line Circuit) in 597-Type Panel

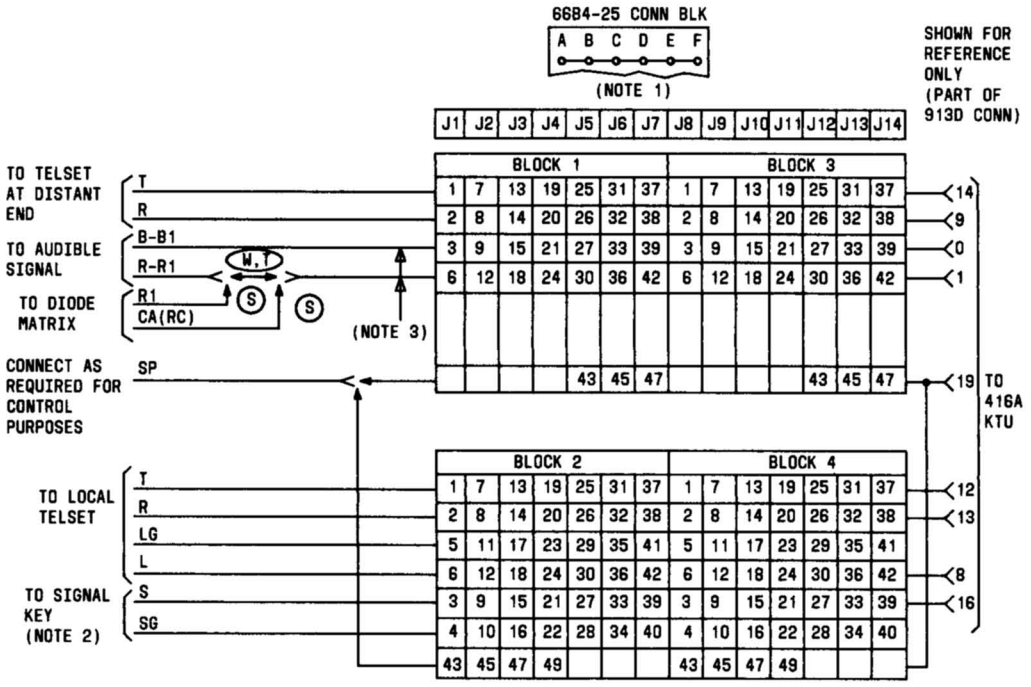

OPTION STRAPPING ON 416A KTU OPTION BLK

FEATURES		OPTION	STRAP TERMINALS
AUDIBLE SIGNALS	INTERRUPTED RING	W	5 TO 8
	STEADY RING	T	7 TO 8
	COMMON WITH DIODE MATRIX CONTROL	S	5 TO 8
AUDIBLE RINGBACK TONE		M	9 TO 10

NOTES:
1. COLUMN ASSIGNMENT FOR LEFT-HAND BLK (1 OR 3) IS A-E AND FOR RIGHT-HAND BLK (2 OR 4) IS F-B.
2. SIGNAL KEY MAY BE A CONVERTED PICKUP KEY OR AN EXTERNAL NON LOCKING KEY.
3. SEE FIG. 8 FOR CONNECTIONS TO BE MADE ON OPTION TERMINAL STRIP B (Ⓖ OPTION).

Fig. 16—Connections for 416A KTU (Station Line Circuit) in 597-Type Panel

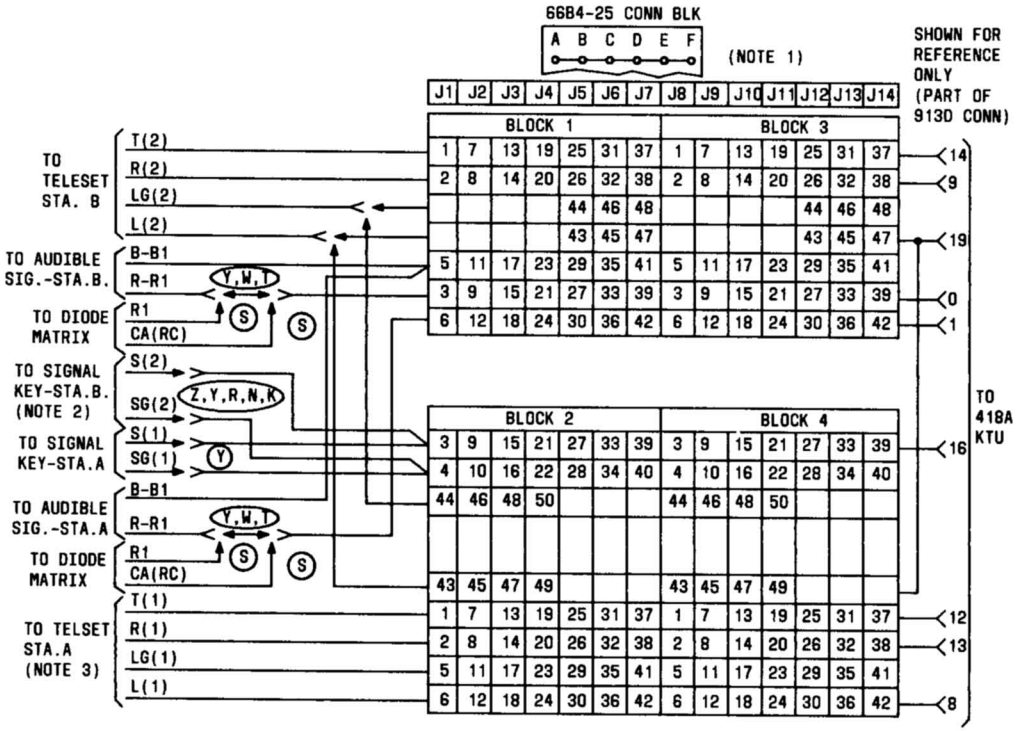

NOTES:

1. COLUMN ASSIGNMENT FOR LEFT-HAND BLK (1 AND 3) IS A-E AND FOR RIGHT-HAND BLK (2 AND 4) IS F-B.
2. SIGNAL KEY CAN BE A CONVERTED PICKUP KEY OR ANY EXTERNAL NONLOCKING KEY.
3. STATION "A" IS ALWAYS ASSIGNED AS THE AUTOMATIC SIGNALING STATION WHENEVER THE ONE-WAY AUTOMATIC, ONE-WAY MANUAL SIGNALING OPTION IS USED.
4. THESE OPTIONS APPLY TO THE SIGNAL KEY AND AUDIBLE SIGNAL AT STATION "B" ONLY. THE AUDIBLE SIGNAL AT STATION "A" IS UNDER CONTROL OF SIGNAL KEY AT STATION "B". THE AUDIBLE SIGNAL AT STATION "A" MAY BE PART OF A COMMON AUDIBLE ARRANGEMENT PROVIDED THE DIODE MATRIX IS USED FOR CONTROL.
5. THE AUDIBLE SIGNALS AT STATION "A" AND "B" MAY BE PART OF A COMMON AUDIBLE ARRANGEMENT PROVIDED THE DIODE MATRIX IS USED FOR CONTROL.

OPTION STRAPPING ON 418A KTU OPTION BLK

FEATURES			OPTION	STRAP TERMINALS
AUDIBLE SIGNALS	TWO-WAY AUTOMATIC	INTERRUPTED RING	W	2 TO 3 TO 4*
		STEADY RING	T	1 TO 2 TO 4*
		COMMON WITH DIODE MATRIX CONTROL	S	2 TO 3 TO 4*
	ONE-WAY AUTOMATIC, ONE-WAY MANUAL (NOTE 4)	INTERRUPTED RING	R	3 TO 4
		STEADY RING	Z	1 TO 4
		COMMON WITH DIODE MATRIX CONTROL	K	3 TO 4
	TWO-WAY MANUAL (NOTE 5)		Y	
AUDIBLE RING-BACK	TWO-WAY AUTOMATIC		O	9 TO 10, 5 TO 7 TO 8*
	ONE-WAY AUTOMATIC, ONE-WAY MANUAL		H	5 TO 7, 9 TO 10
	TWO-WAY MANUAL		M	9 TO 10

* USE CONTINUOUS METHOD OF STRAPPING

Fig. 17—Connections for 418A KTU (Short Range, DC Signaling, Private Line Circuit) in 597-Type Panel

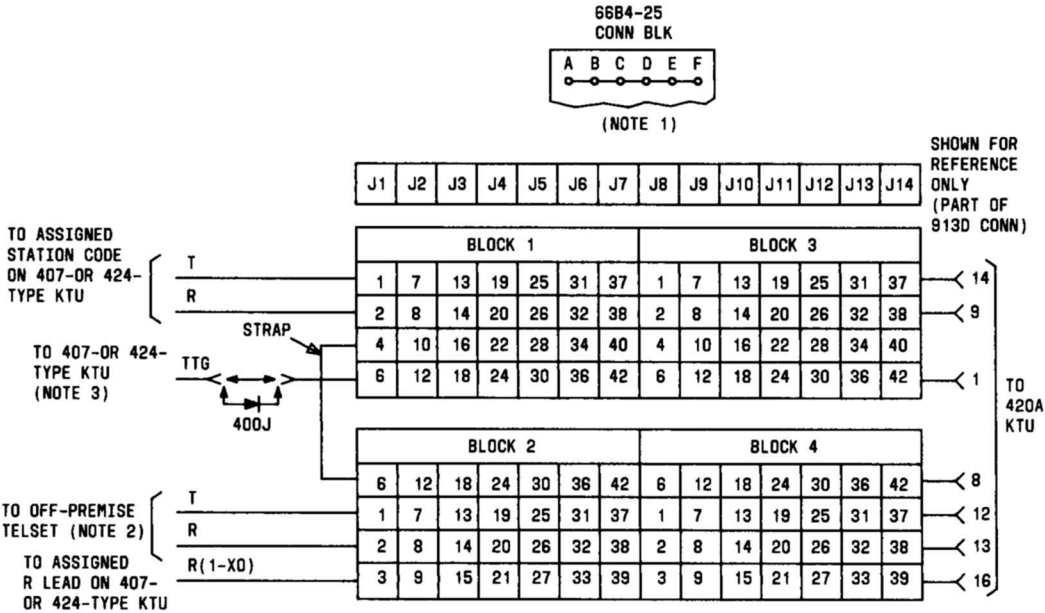

NOTES:

1. COLUMN ASSIGNMENT FOR LEFT-HAND BLK (1 OR 3) IS COLUMN A-E AND FOR RIGHT-HAND BLK (2 OR 4) IS COLUMN F-B.
2. MAXIMUM STATION CONDUCTOR LOOP IS 500 OHMS. OFF-PREMISE TELEPHONE SET MAY BE EQUIPPED WITH A "TOUCH-TONE" DIAL PROVIDED THE INTERCOM CIRCUIT IS SO EQUIPPED.
3. PROVIDE A 400J DIODE FOR EACH 420A KTU INSTALLED WHEN THE INTERCOM IS EQUIPPED WITH THE "TOUCH-TONE" ADAPTER (426/427-TYPE, 440A, OR 478B KTU) DIODE NOT REQUIRED WITH 494A KTU

OPTION STRAPPING ON 420A KTU OPTION BLK

FEATURE		OPTION	STRAP TERMINALS
AUDIBLE SIGNALS	AC BUZZER, 10V±, 18V±	J	1 TO 4
	DC BUZZER, 24 VDC	K	7 TO 8
	RINGER, 105V± STEADY	M	2 TO 4 7 TO 8

Fig. 18—Connections for 420A KTU (Long Line Circuit) in 597-Type Panel

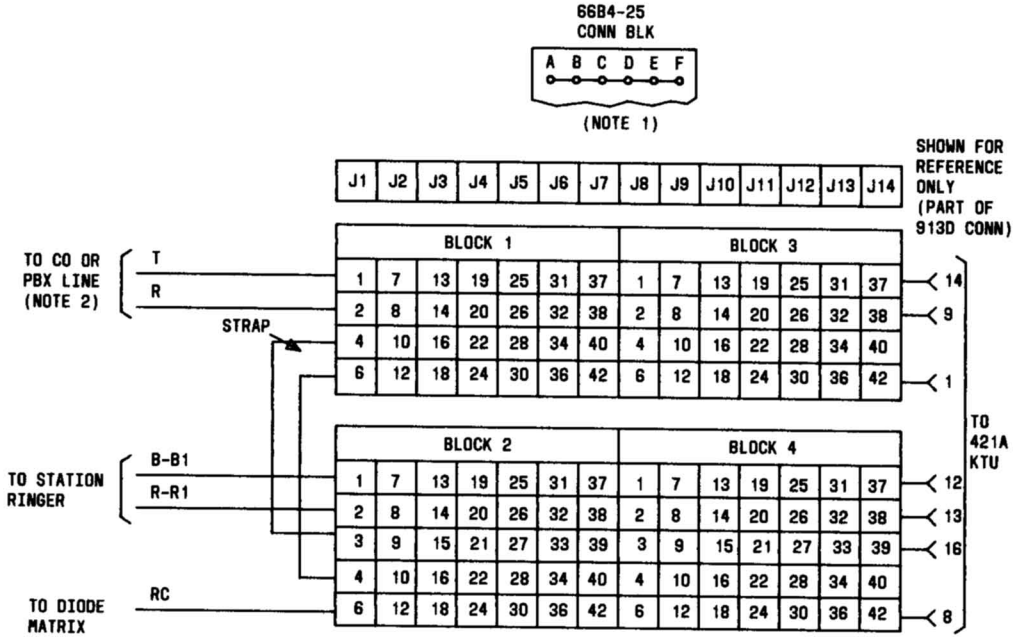

NOTES:
1. COLUMN ASSIGNMENT FOR LEFT-HAND BLK (1 OR 3) IS COLUMN A-E AND FOR RIGHT-HAND BLK (2 OR 4) IS COLUMN F-B.
2. ONLY ONE STATION RINGER CAN BE TRANSFERRED WHEN THE 421A KTU IS USED IN A 597A PANEL.

OPTION STRAPPING ON 421A KTU OPTION BLK

FEATURE	OPTION	STRAP TERMINALS
FOR GENERAL PURPOSE USE	W	1 TO 2 5 TO 6 7 TO 8

Fig. 19—Connections for 421A KTU (Power Failure Transfer Circuit) in 597-Type Panel

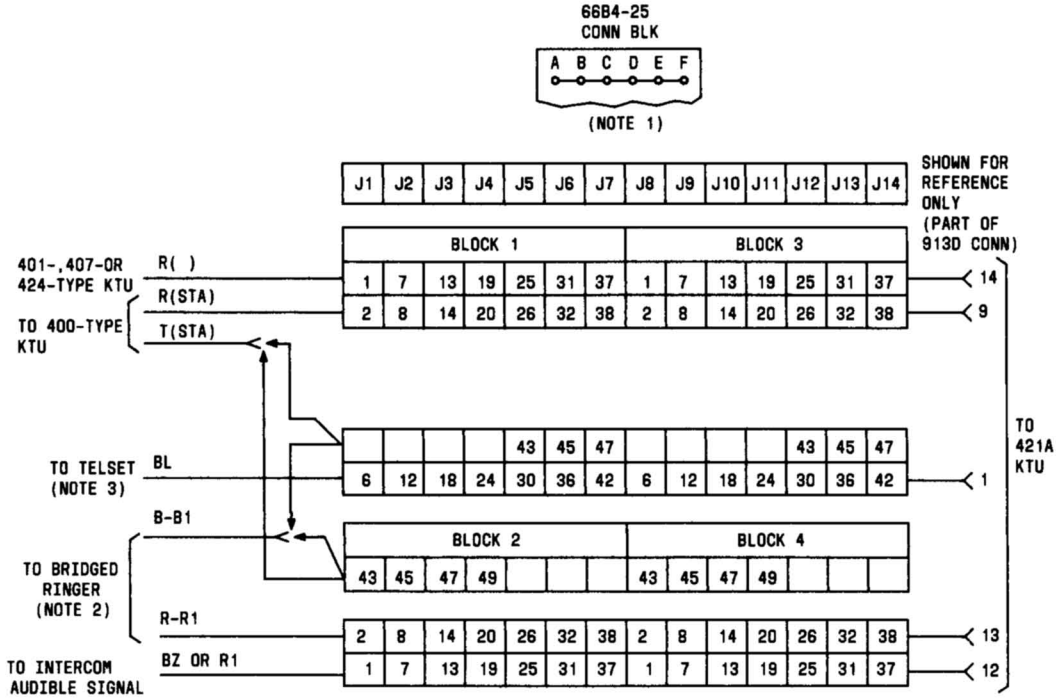

NOTES:
1. COLUMN ASSIGNMENT FOR LEFT-HAND BLK (1 OR 3) IS A-E AND FOR RIGHT-HAND BLK (2 OR 4) IS F-B.
2. ONLY ONE BRIDGED RINGER CAN BE SUPRESSED WHEN THE 421A KTU IS USED IN A 597A PANEL
3. TELEPHONE SET MUST BE EQUIPPED WITH STATION BUSY OPTION

Fig. 20—Connections for 421A KTU (Audible Signal Suppression Circuit) in 597-Type Panel Arranged to Suppress Bridged Ringing and Intercom Audible Signal

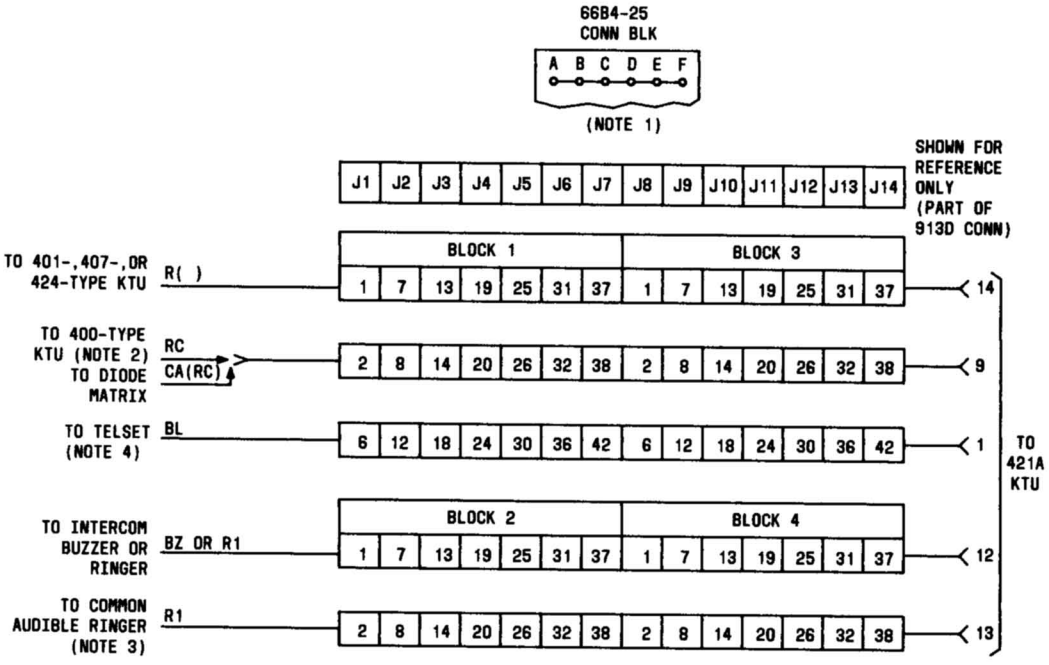

NOTES:

1. COLUMN ASSIGNMENT FOR LEFT-HAND BLK (1 OR 3) IS A-E AND FOR RIGHT-HAND BLK (2 OR 4) IS F-B.
2. REFER TO 400-TYPE KTU FOR OPTION.
3. ONLY ONE COMMON RINGER CAN BE SUPPRESSED WHEN THE 421A KTU IS USED IN A 597A PANEL.
4. TELEPHONE SET MUST BE EQUIPPED WITH STATION BUSY OPTION.

421A KTU OPTION

OPTION	PLACE STRAP
W	1 TO 2

Fig. 21—Connections for 421A KTU (Audible Signal Suppression Circuit) in 597-Type Panel Arranged to Suppress Common Audible Ringing and Intercom Audible Signal

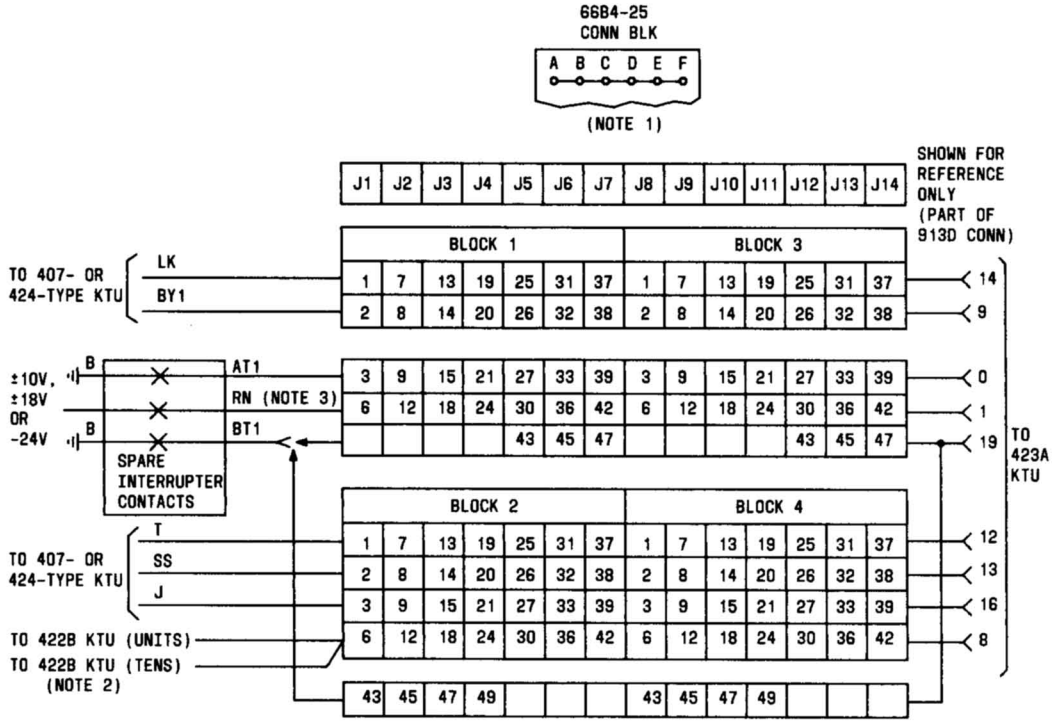

NOTES:

1. COLUMN ASSIGNMENT FOR LEFT-HAND BLK (1 OR 3) IS COLUMN A-E AND FOR RIGHT-HAND BLK (2 OR 4) IS COLUMN F-B.
2. 422B KTUS ASSOCIATED WITH THE SAME DIAL INTERCOM AS THE 423A KTU.
3. IF INTERRUPTED 105V± IS USED FOR DIAL INTERCOM, DO NOT CONNECT THIS LEAD. IF BUZZERS ARE USED FOR DIAL INTERCOM, AUDIBLE SIGNAL IS SUPPLIED ON THIS LEAD VIA SPARE INTERRUPTER CONTACTS TO PIN 1 OF 423A KTU. ON 423A KTU OPTION BLK, STRAP TERMINALS 6 TO 7 AND REMOVE (R) OPTION STRAP BETWEEN TERMINALS 4 AND 6.
4. TURN KNURLED WHEEL TO FULL CLOCKWISE POSITION FOR MINIMUM DIAL TONE VOLUME AND TO FULL COUNTERCLOCKWISE POSITION FOR MAXIMUM DIAL TONE VOLUME.

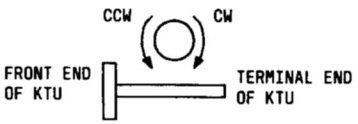

FEATURE	423A	
	OPTION	STRAP
DIAL TONE	T	1-2
STATION BUSY TONE	R	4-6
AUDIBLE RINGBACK	S	*

* REQUIRES NO STRAPPING ON KTU

Fig. 22—Connections for 423A KTU (Dial Tone, Busy Tone, and Audible Ringback Tone Circuit) in 597-Type Panel

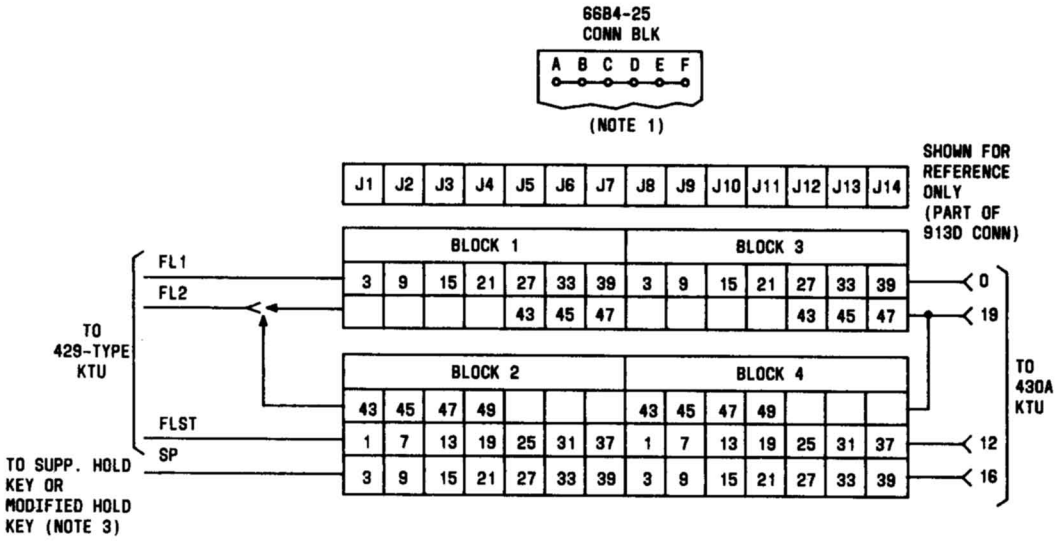

NOTES:

1. COLUMN ASSIGNMENT FOR LEFT-HAND BLK (1 OR 3) IS A-E AND FOR RIGHT-HAND BLK (2 OR 4) IS F-B
2. LIMITATION OF 430A KTU ARE AS FOLLOWS:
   (A) FL1 OR FL2 CAN SERVE A MAXIMUM OF 50 LAMPS (51A) EACH. DIVIDE LAMPS AS EVENLY AS POSSIBLE BETWEEN THE TWO LEADS.
   (B) SP LEAD CAN CONNECT TO A MAXIMUM OF 20 STATIONS
3. FOR MODIFICATION OF HOLD KEY, SEE SECTION COVERING TELEPHONE SET IN USE.

Fig. 23—Connections for 430A KTU (Flutter Generator Circuit) in 597-Type Panel

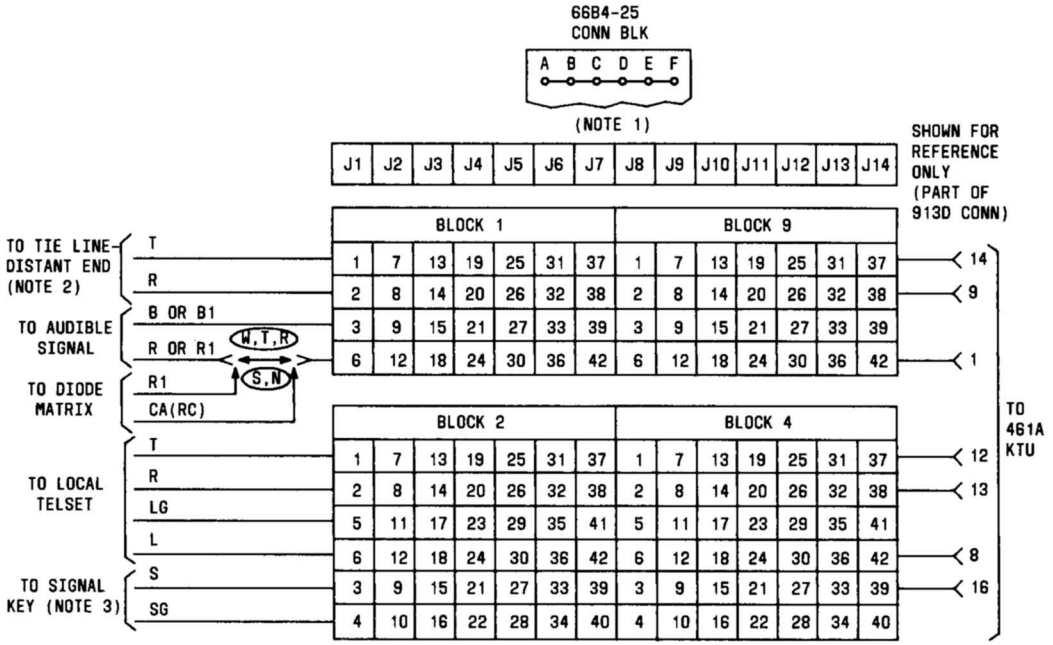

OPTION STRAPPING ON 461A KTU OPTION BLK

FEATURES			OPTIONS	STRAP TERMINALS
AUDIBLE SIGNALS	UNDER CONTROL OF TIME-OUT CIRCUIT (B RELAY)	INTERRRUPTED RING	W	7 TO 8
		STEADY RING	T	6 TO 7
		COMMON WITH DIODE MATRIX CONTROL	S	7 TO 8
	UNDER CONTROL OF R RELAY	STEADY RING	R	
		COMMON WITH DIODE MATRIX CONTROL	N	4 TO 6
TIME-OUT	10 SECONDS		X	1 TO 2
	16 SECONDS		Z	2 TO 3
	23 SECONDS		WITHOUT X OR Z	REMOVE X OR Z STRAPS
AUDIBLE RINGBACK TONE			M	9 TO 10

NOTES:
1. COLUMN ASSIGNMENT FOR LEFT-HAND BLK (1 OR 3) IS A-E AND FOR RIGHT-HAND BLK (2 OR 4) IS F-B.
2. PRIVATE LINE CIRCUIT AT DISTANT END MAY BE A 414A KTU (MD), 419A KTU, 461A KTU, OR ANY OTHER TYPE PRIVATE LINE UNIT REQUIRING RINGING VOLTAGE FOR THE RING UP CIRCUIT AND FURNISHING RINGING VOLTAGE FROM THE SIGNALING CIRCUIT.
3. SIGNAL KEY MAY BE A CONVERTED PICKUP KEY OR ANY EXTERNAL NONLOCKING KEY.

Fig. 24—Connections for 461A KTU (Manual Signaling, Ringdown Private Line Circuit) in 597-Type Panel

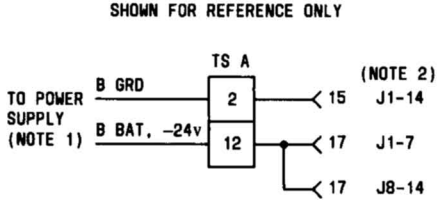

NOTES
1. B BAT AND GRD PROVIDED AS DEDICATED WIRING, NO OTHER CONNECTIONS ARE REQUIRED.
2. KTU MAY BE INSTALLED IN ANY AVAILABLE JACK.

Fig. 25—Connections for 467A KTU (Low Voltage Monitor Circuit) in 597-Type KTU

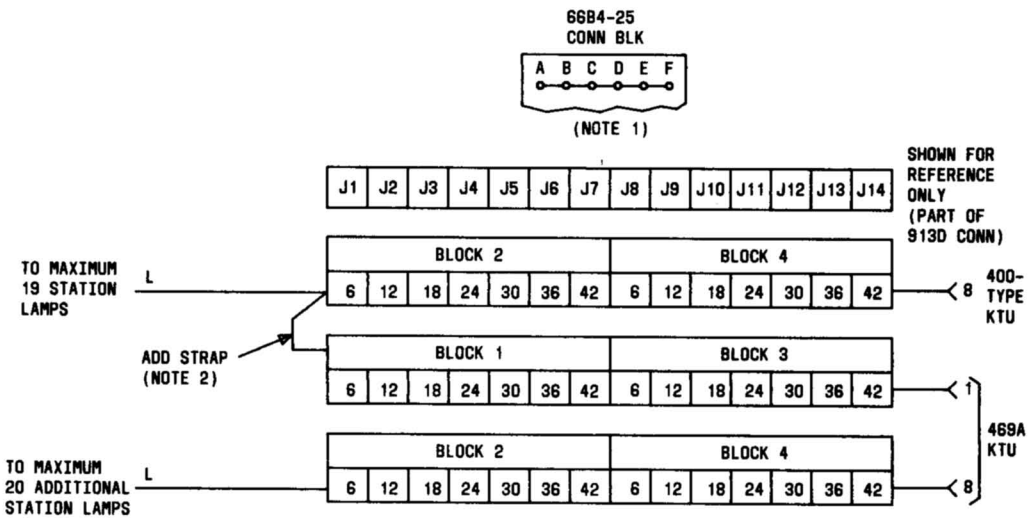

NOTES:
1. COLUMN ASSIGNMENT FOR LEFT-HAND BLOCK (1 OR 3) IS A-E AND FOR RIGHT-HAND BLOCK (2 OR 4) IS F-B.
2. ADD STRAP FROM JACK CONTAINING 400-TYPE KTU REQUIRING LAMP MULTIPLE TO JACK CONTAINING 469A KTU. CONNECT ADDITONAL LAMP LEADS TO L LEAD OF 469A KTU.

Fig. 26—Connections for 469A KTU (Lamp Extender Circuit) in 597-Type KTU

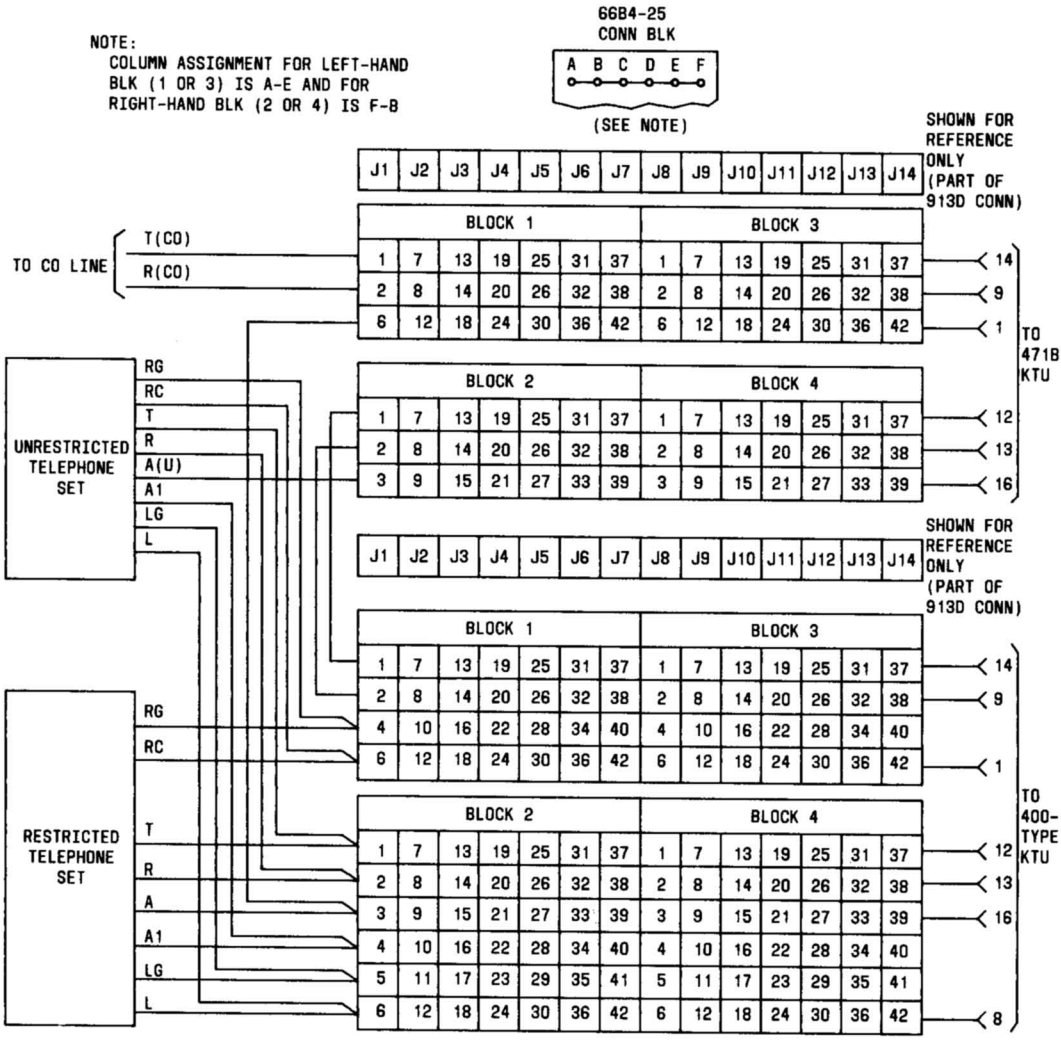

Fig. 27—Connections for 471B KTU (Battery Reversal Toll Restriction Circuit) in 597-Type Panel

NOTES:
1. COLUMN ASSIGNMENT FOR LEFT-HAND BLK (1,3,5,7,9) IS A-E AND FOR RIGHT-HAND BLK (2,4,6,8,10) IS F-B.
2. TERMINALS 33 THRU 48 ARE SPARES ON CONN BLKS 9 AND 10.
3. WHEN ZC OPTION IS USED, DUE TO THE DELAYED RELEASE OF THE HOLD BRIDGE, SOME TRANSMISSION LOSS IS ENCOUNTERED FOR APPROXIMATELY ONE SECOND WHEN STATION REENTERS A HELD CALL.

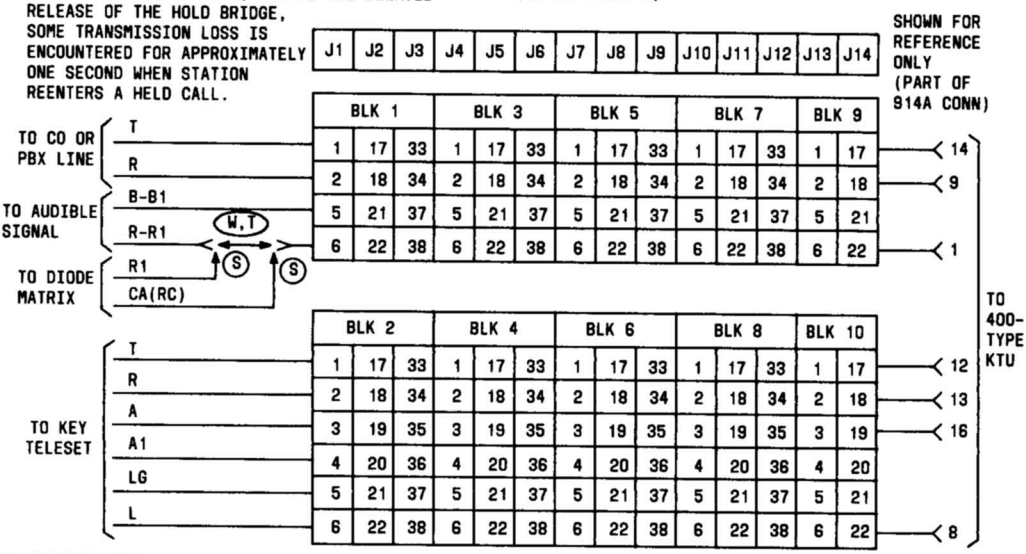

* TO PROVIDE TIME-OUT CYCLES OF RING-UP CIRCUITS FROM 2.5 TO 7.5 SECONDS, INSTALL KS-13490, L1,1 WATT OR EQUIVALENT RESISTOR BETWEEN TERMINALS 1 AND 3 WITH STRAP FROM 1 TO 2. TIME-OUT CYCLE AND RESISTOR VALUES ARE AS FOLLOWS:
2.5 SECONDS - 0.13 MEGOHM RESISTOR
3.3 SECONDS - 0.20 MEGOHM RESISTOR
5.0 SECONDS - 0.39 MEGOHM RESISTOR
6.7 SECONDS - 0.75 MEGOHM RESISTOR
7.5 SECONDS - 1.2 MEGOHM RESISTOR

† FOR 30-SECONDS TIME-OUT CYCLE REMOVE ALL STRAPS FROM TERMINALS 1,2, AND 3. WHEN THE DURATION OF MACHINE RINGING IS 1 SECOND OR LESS, TIME-OUT SHALL NOT BE REDUCED BELOW 5 SECONDS.

OPTION STRAPPING ON 400-TYPE KTU OPTION BLK

FEATURES		OPTION	400A,B,C	400D
AUDIBLE SIGNALS	INTERRUPTED RING	W	5 TO 6	5 TO 8
	STEADY RING	T	4 TO 6	6 TO 8
	COMMON WITH DIODE MATRIX CONTROL	S	5 TO 6	5 TO 8
VISUAL HOLD CIRCUIT	LAMP WINK	Y	8 TO 9	10 TO 7
	LAMP STEADY	X	7 TO 9	7 TO 9
TIME-OUT CONTROL	SHORT TIME DELAY (10 SECONDS)	Z*	1 TO 2	1 TO 2
	LONG TIME DEALY	†	†	
RELEASE OF HOLDING BRIDGE FROM CO OR PBX LINE CURRENT OPENS GREATER THAN	500 MILLISECONDS WHEN ASSOCIATED WITH NO. 1 ESS HAVING RESWITCH CAPABILITY	ZC (NOTE 3)	2 TO 3 USING 601A (5 UF) CAPACITOR OR EQUIVALENT	
	100 MILLISECONDS WHEN ASSOCIATED WITH 800A PBX AND/OR NO. 5 X-BAR CENTREX NOT HAVING AUTOMATIC PERMANENT SIGNAL RELEASE	ZD	2 TO 3 USING 575C (1 UF) CAPACITOR OR EQUIVALENT	
	50 MILLISECONDS WHEN ASSOCIATED WITH NO. 5 X-BAR CENTREX HAVING AUTOMATIC PERMANENT SIGNAL RELEASE	ZJ	2 TO 3 USING 575B (0.5 UF) CAPACITOR OR EQUIVALENT	

Fig. 28—Connections for 400D KTU (MD) (CO or PBX Line Circuit) in 598-Type Panel

NOTES:
1. COLUMN ASSIGNMENT FOR LEFT-HAND BLK (1,3,5,7,9) IS A-E AND FOR RIGHT-HAND BLK (2,4,6,8,10) IS F-B.
2. TERMINALS 33 THRU 48 ARE SPARES ON CONN BLKS 9 AND 10.

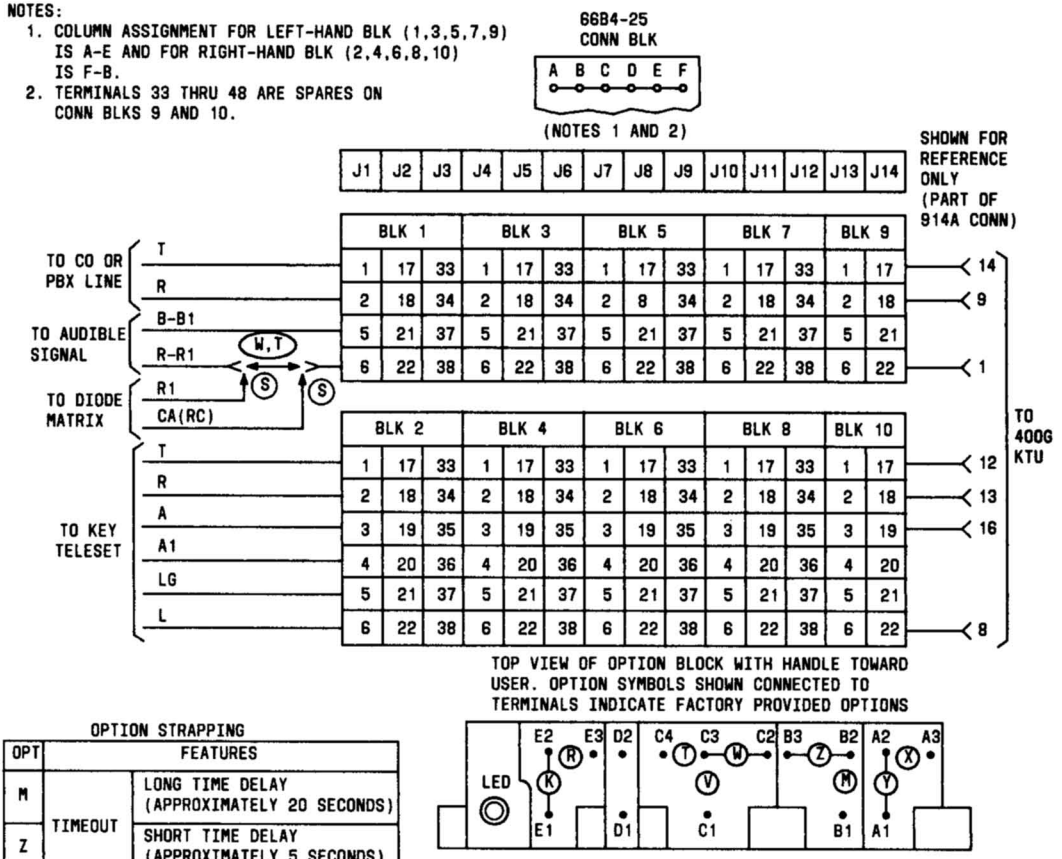

TOP VIEW OF OPTION BLOCK WITH HANDLE TOWARD USER. OPTION SYMBOLS SHOWN CONNECTED TO TERMINALS INDICATE FACTORY PROVIDED OPTIONS

OPTION STRAPPING

OPT	FEATURES		
M	TIMEOUT	LONG TIME DELAY (APPROXIMATELY 20 SECONDS)	
Z		SHORT TIME DELAY (APPROXIMATELY 5 SECONDS)	
Y	VISUAL HOLD CKT	LAMP WINK	
X		LAMP STEADY	
W	AUDIBLE SIGNAL	INTERRUPTED RING	
T		STEADY RING	
S		COMMON WITH DIODE MATRIX CONTROL	
V		COMMON WITH RELAY CONTROL	
R	DELAYED HOLD RELEASE	RELEASE OF HOLDING BRIDGE FROM CO OR PBX BY LINE CURRENT OPENS	MINIMUM OF 25 MS
K			600 MS

OPTION	CONNECT OPTION PLUG TO TERMINALS
Z	B2-B3
Y	A1-A2
X	A2-A3
T	C3-C4
W	C2-C3
V	C1-C3
R	E2-E3
K	E1-E2
M	B1-B2

Fig. 29—Connections for 400G KTU (MD) (CO or PBX Line Circuit) in 598-Type Panel

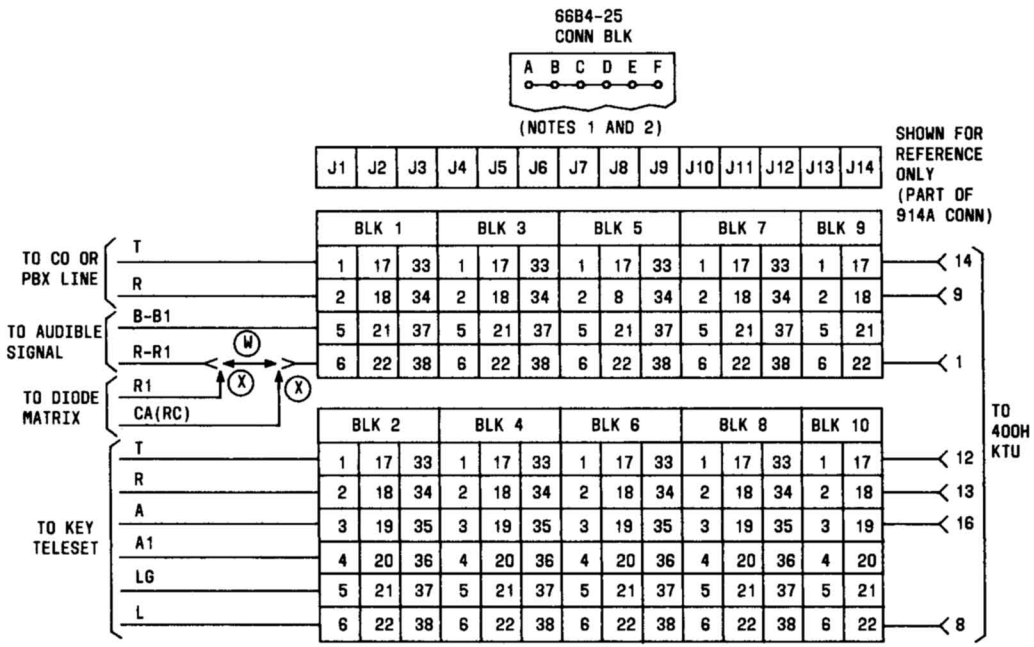

NOTES:
1. COLUMN ASSIGNMENTS FOR LEFT-HAND BLK (1,3,5,7,9) IS A-E AND FOR RIGHT BLK (2,4,6,8,10) IS F-B.
2. TERMINALS 33 THRU 48 ARE SPARES ON CONN BLKS 9 AND 10.
3. RING TIMEOUT IS NOT ADJUSTABLE; OCCURS IN 5 TO 8-1/2 SECONDS.

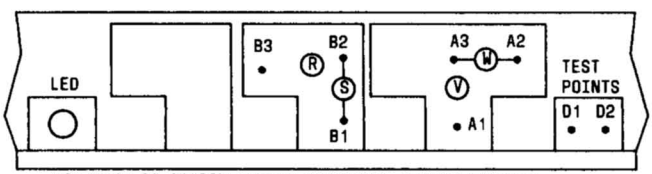

TOP VIEW OF OPTION-HANDLE ASSEMBLY, OPTION SYMBOLS SHOWN CONNECTED ARE FACTORY-INSTALLED OPTIONS.

OPTION	FEATURES	PLUG POSITION
W	INTERRUPTED RING	A2-A3*
V	COMMON AUDIBLE WITH RELAY CONTROL	A1-A3
X	COMMON AUDIBLE WITH DIODE MATRIX	
S	LONG HOLD RLS #1 ESS, #2 ESS, 812 770, DIMENSION PBX	B1-B2*
R	SHORT HOLD RLS ALL OTHER	B2-B3

*FACTORY PROVIDED

Fig. 30—Connections for 400H KTU (CO or PBX Line Circuit) in 598-Type Panel

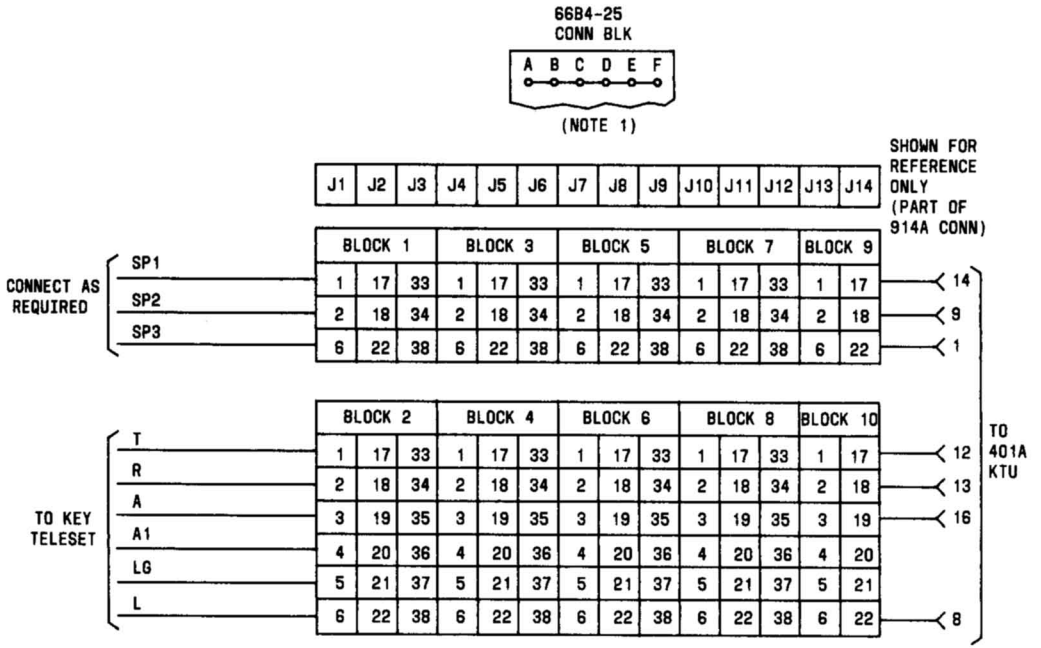

NOTES:
1. COLUMN ASSIGNMENT FOR LEFT-HAND BLK (1, 3, 5, 7, 9) IS A-E AND FOR RIGHT-HAND BLK (2, 4, 6, 8, 10) IS F-B.
2. TERMINALS 33 THRU 48 ARE SPARES ON CONN BLKS 9 AND 10.

Fig. 31—Connections for 401A KTU (Manual Intercom Line Circuit) in 598-Type Panel

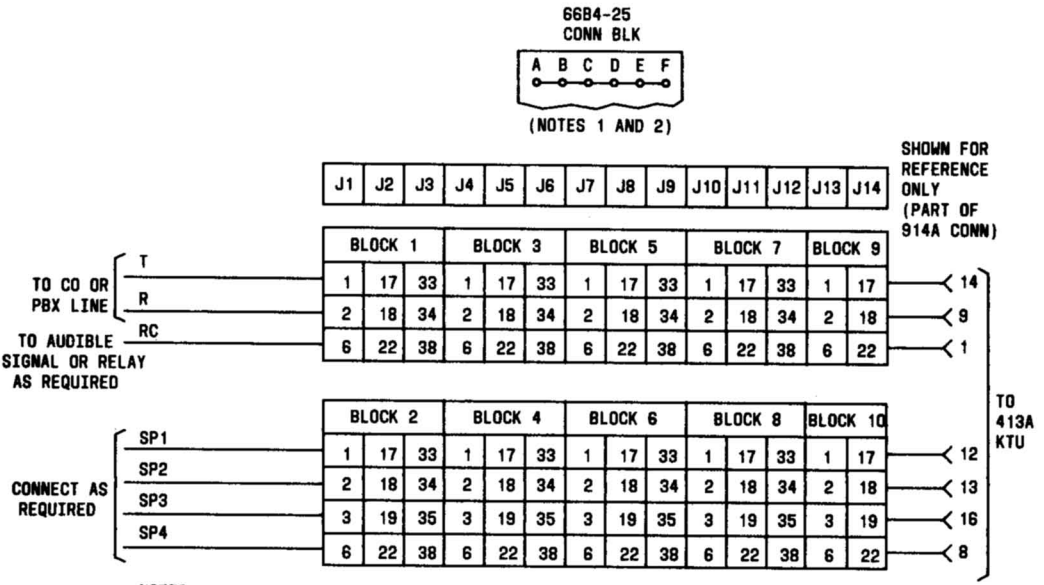

NOTES:

1. COLUMN ASSIGNMENT FOR LEFT-HAND BLK (1, 3, 5, 7, 9) IS A-E AND FOR RIGHT-HAND BLK (2, 4, 6, 8, 10) IS F-B.
2. TERMINALS 33 THRU 48 ARE SPARES ON CONN BLKS 9 AND 10.

OPTION STRAPPING ON 413A KTU OPTION BLK

FEATURE		OPTION	STRAP TERMINALS
AUDIBLE SIGNALS	STEADY RING	X	9 TO 10
	INTERRUPTED RING	Z	8 TO 10

Fig. 32—Connections for 413A KTU (Auxiliary Ringup Circuit) in 598-Type Panel

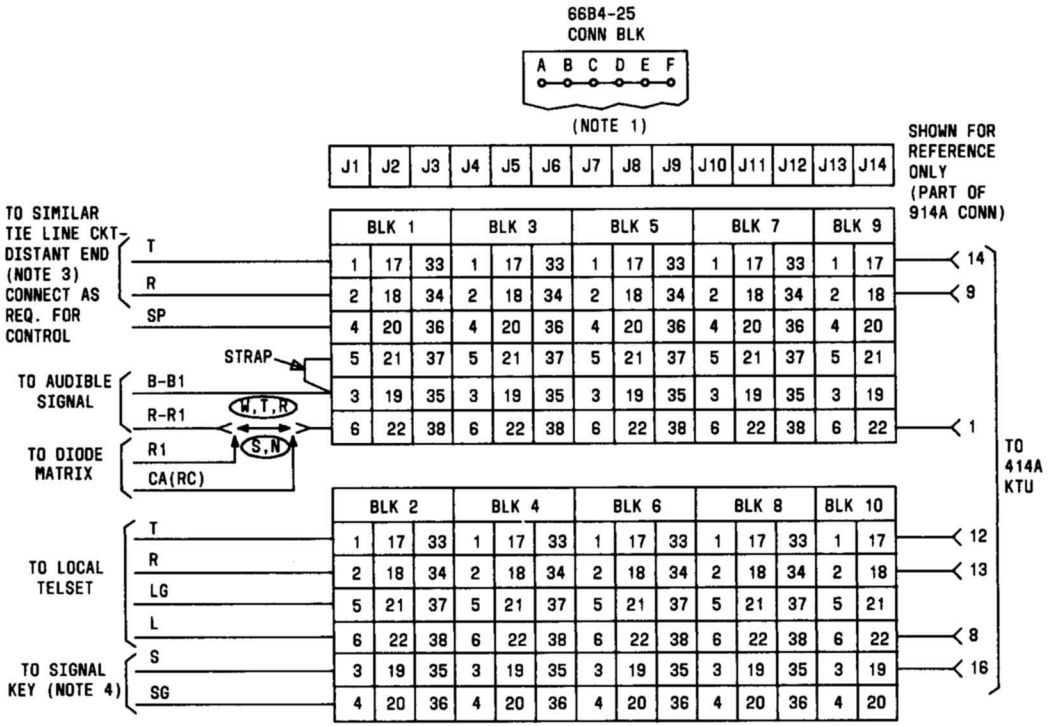

OPTION STRAPPING ON 414A KTU (MD) OPTION BLK

FEATURES			OPTIONS	STRAP TERMINALS
AUDIBLE SIGNALS	UNDER CONTROL OF TIME-OUT CIRCUIT (B RELAY)	INTERRRUPTED RING	W	7 TO 8
		STEADY RING	T	6 TO 7
		COMMON WITH DIODE MATRIX CONTROL	S	7 TO 8
	UNDER CONTROL OF R RELAY	STEADY RING	R	
		COMMON WITH DIODE MATRIX CONTROL	N	4 TO 6
TIME-OUT	10 SECONDS		X	1 TO 2
	16 SECONDS		Z	2 TO 3
	23 SECONDS		WITHOUT X OR Z	REMOVE X OR Z STRAPS
AUDIBLE RINGBACK TONE			M	9 TO 10

NOTES:

1. COLUMN ASSIGNMENT FOR LEFT-HAND BLK (1,3,5,7,9) IS A-E AND FOR RIGHT-HAND BLK (2,4,6,8,10) IS F-B.
2. TERMINALS 33 THRU 48 ARE SPARES ON CONN BLKS 9 AND 10.
3. PRIVATE LINE CIRCUIT AT DISTANT END MAY BE A 414A KTU, OR ANY OTHER TYPE PRIVATE LINE UNIT REQUIRING RINGING VOLTAGE FOR THE RING UP CIRCUIT AND FURNISHING RINGING VOLTAGE FROM THE SIGNALING CIRCUIT.
4. SIGNAL KEY MAY BE A CONVERTED PICKUP KEY OR ANY EXTERNAL NONLOCKING KEY.

Fig. 33—Connections for 414A KTU (Manual Signaling, Ringdown Private Line Circuit) in 598-Type Panel

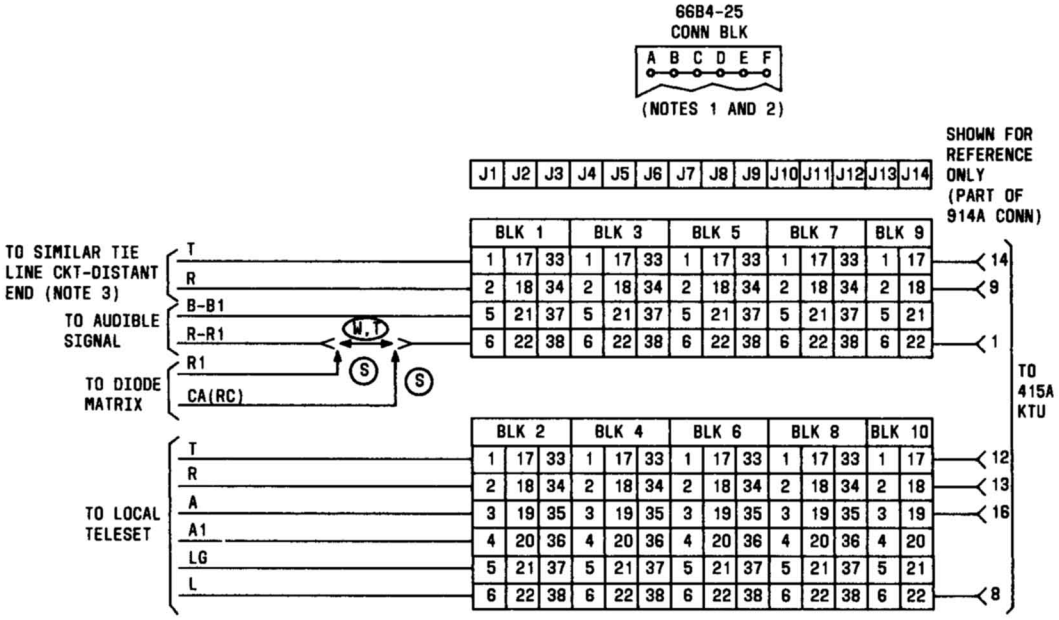

NOTES:

1. COLUMN ASSIGNMENT FOR LEFT-HAND BLK (1,3,5,7,9) IS A-E AND FOR RIGHT-HAND BLK (2,4,6,8,10) IS F-B.
2. TERMINALS 33 THRU 48 ARE SPARES ON CONN BLKS 9 AN 10.
3. PRIVATE LINE CIRCUIT AT DISTANT END MAY BE A 415A KTU OR ANY OTHER TYPE PRIVATE LINE UNIT REQUIRING DC VOLTAGE FOR THE RING UP CIRCUIT AND FURNISHING DC VOLTAGE FROM THE SIGNALING CIRCUIT.

OPTION STRAPPING ON 415A KTU OPTION BLK*

FEATURES		OPTION	STRAP TERMINALS
AUDIBLE SIGNALS	INTERRPTED RING	W	4 TO 6
	STEADY RING	T	5 TO 6
	COMMON WITH DIODE MATRIX CONTROL	S	4 TO 6
AUDIBLE RINGBACK TONE		M	1 TO 2
VISUAL HOLD SIGNAL		Y	7 TO 8

* FOR IDLE LINE TERMINATION CONNECT A KS-13490, L1 910 OHM RESISTOR IN SERIES WITH A 542F, 2 μF CAPACITOR ACROSS TERMINALS 9 AND 10. ORDER COMPONENTS LOCALLY AND INSTALL.

Fig. 34—Connections for 415A KTU (Automatic, DC Signaling, Private Line Circuit) in 598-Type Panel

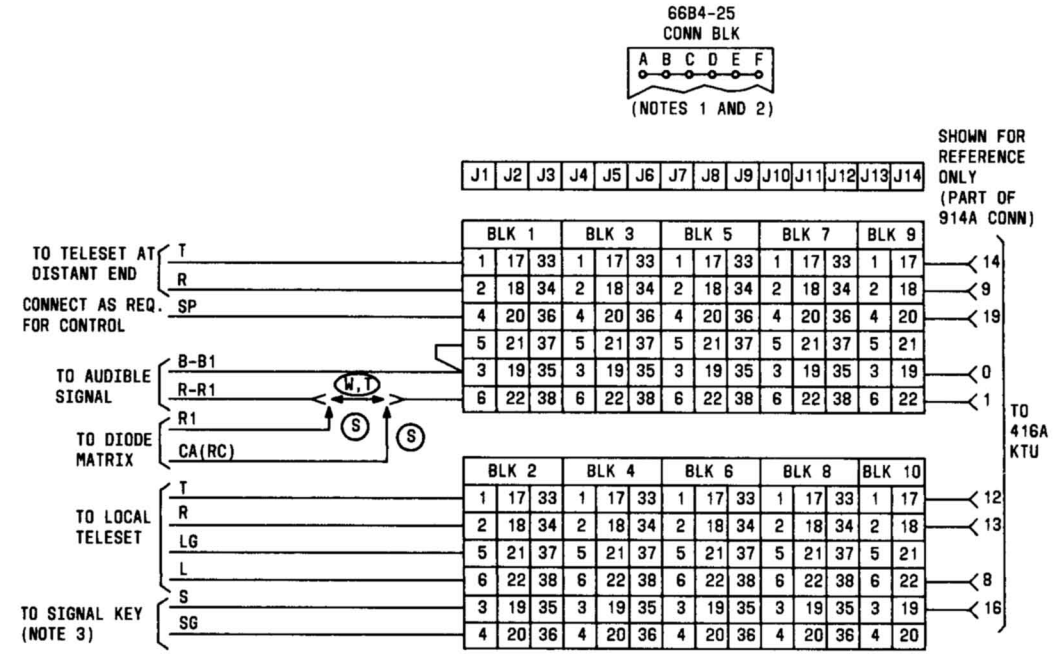

NOTES:

1. COLUMN ASSIGNMENT FOR LEFT-HAND BLK (1,3,5,7,9) IS A-E AND FOR RIGHT-HAND BLK (2,4,6,8,10) IS F-B.
2. TERMINALS 33 THRU 48 ARE SPARES ON CONN BLKS 9 AN 10.
3. SIGNAL KEY MAY BE A CONVERTED PICKUP KEY OR AN EXTERNAL NONLOCKING KEY.

OPTION STRAPPING ON 416A KTU OPTION BLK*

FEATURES		OPTION	STRAP TERMINALS
AUDIBLE SIGNALS	INTERRPTED RING	W	5 TO 8
	STEADY RING	T	7 TO 8
	COMMON WITH DIODE MATRIX CONTROL	S	5 TO 8
AUDIBLE RINGBACK TONE		M	9 TO 10

Fig. 35—Connections for 416A KTU (Station Line Circuit) in 598-Type Panel

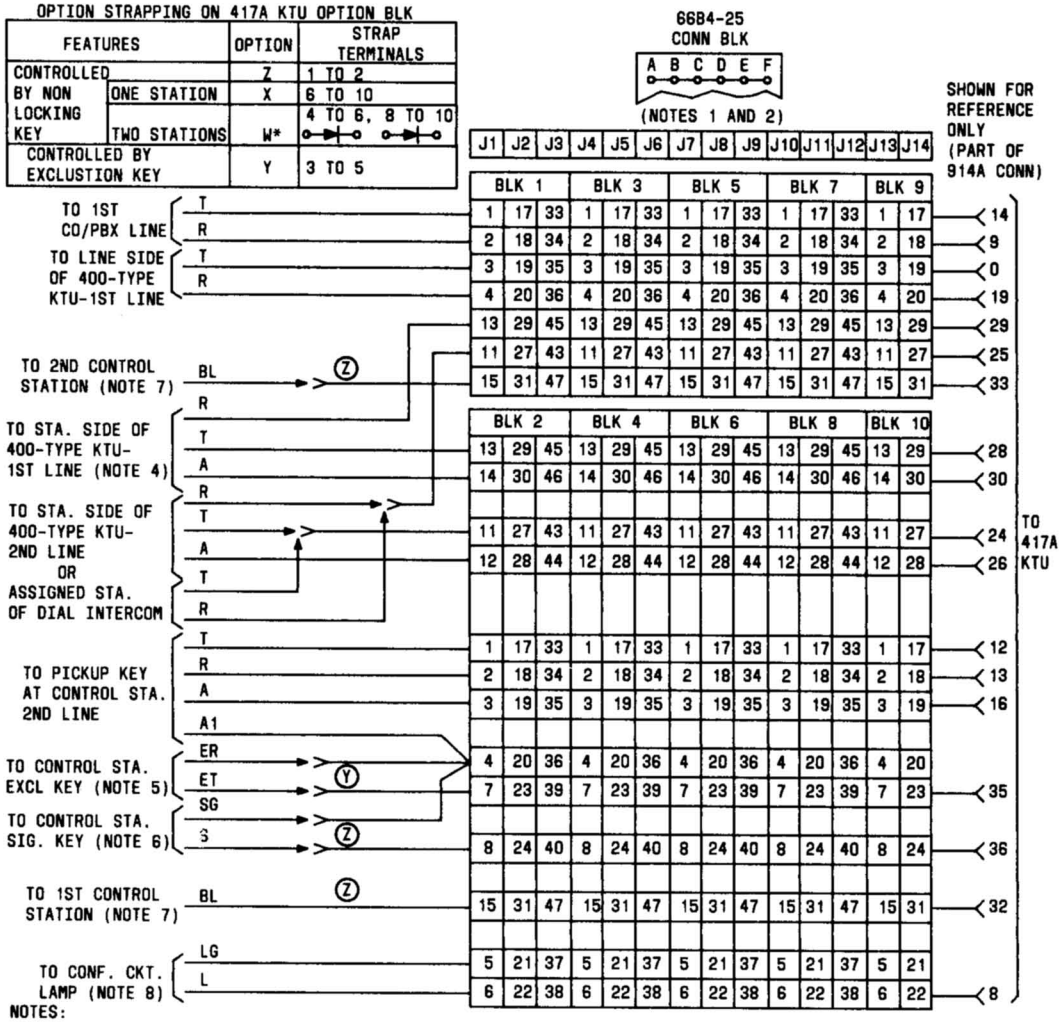

NOTES:

1. COLUMN ASSIGNMENT FOR LEFT-HAND BLK (1,3,5,7,9) IS A-E AND FOR RIGHT HAND BLK (2,4,6,8,10) IS F-B.
2. TERMINALS 33 THRU 48 ARE SPARES ON CONN BLKS 9 AND 10.
3. ASSOCIATED LAMP AND RINGING LEADS FROM THE 400-TYPE KTUS AND DIAL INTERCOM LINE CONNECT DIRECTLY TO TO TELEPHONE SETS.
4. STATION LEADS FROM THE TEL SET FOR THE 1ST LINE MUST ALSO BE TERMINATED TO THE STA SIDE OF THE ASSIGNED 400-TYPE KTU.
5. REMOVE AND INSULATE EXCLUSION KEY LEADS FROM 1T AND 1R IN THE TEL SET IF SO CONNECTED.
6. SIGNAL KEY MAY BE A CONVERTED PICKUP KEY OR AN EXTERNAL NONLOCKING KEY.
7. A DIODE MUST BE INSTALLED IN THE "A" LEAD OF THE TEL SET WHEN Z OPTION IS PROVIDED. FOR METHOD OF CONNECTION USE STATION BUSY LAMP OPTION AS SHOWN IN CONNECTION SECTION OF TYPE SET USED.
8. LAMP INDICATING CONFERENCE CKT IS ACTIVATED.

Fig. 36—Connections for 417A KTU (Add-On Conference Circuit) in 598-Type Panel

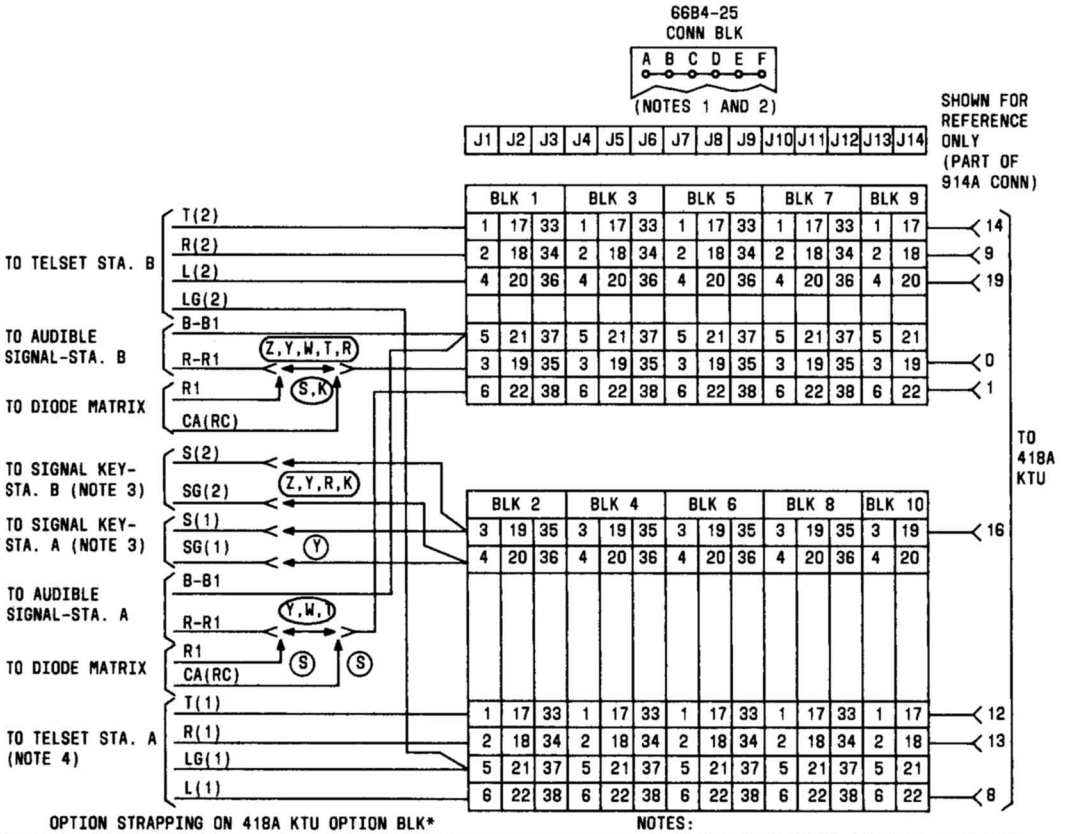

OPTION STRAPPING ON 418A KTU OPTION BLK*

FEATURES			OPTION	STRAP TERMINALS
AUDIBLE SIGNALS	TWO-WAY AUTOMATIC	INTERRPTED RING	W	2 TO 3 TO 4*
		STEADY RING	T	1 TO 2 TO 4*
		COMMON WITH DIODE MATRIX CONTROL	S	2 TO 3 TO 4*
	ONE-WAY AUTOMATIC ONE-WAY MANUAL (NOTE 5)	INTERRUPTED RING	R	3 TO 4
		STEADY RING	Z	1 TO 4
		COMMON WITH DIODE MATRIX CONTROL	K	3 TO 4
		TWO-WAY MANUAL (NOTE 6)	Y	
AUDIBLE RING-BACK	TWO-WAY AUTOMATIC		Q	9 TO 10, 5 TO 7 TO 8*
	ONE-WAY AUTOMATIC ONE-WAY MANUAL		H	5 TO 7, 9 TO 10
	TWO-WAY MANUAL		M	9 TO 10

6. THE AUDIBLE SIGNALS AT STATION "A" AND "B" MAY BE PART OF A COMMON AUDIBLE ARRANGEMENT PROVIDED THE DIODE MATRIX IS USED FOR CONTROL.

NOTES:

1. COLUMN ASSIGNMENT FOR LEFT-HAND BLK (1,3,5,7,9) IS A-E AND FOR RIGHT-HAND BLK (2,4,6,8,10) IS F-B)
2. TERMINALS 33 THRU 48 ARE SPARES ON CONN BLKS 9 AND 10.
3. SIGNAL KEY CAN BE A CONVERTED PICKUP OR ANY EXTERNAL NONLOCKING KEY.
4. STATION "A" IS ALWAYS ASSIGNED AS THE AUTOMATIC SIGNALING STATION WHENEVER THE ONE-WAY AUTOMATIC, ONE-WAY MANUAL SIGNALING OPTION IS USED.
5. THESE OPTIONS APPLY TO THE SIGNAL KEY AND AUDIBLE SIGNAL TO STATION "B" ONLY. THE AUDIBLE SIGNAL AT STATION "A" IS UNDER CONTROL OF SIGNAL KEY AT STATION "B". THE AUDIBLE SIGNAL AT STATION "A" MAY BE PART OF COMMON AUDIBLE ARRANGEMENT PROVIDED THE DIODE MATRIX IS USED FOR CONTROL.

Fig. 37—Connections for 418A KTU (Short Range, DC Signaling, Private Line Circuit) in 598-Type Panel

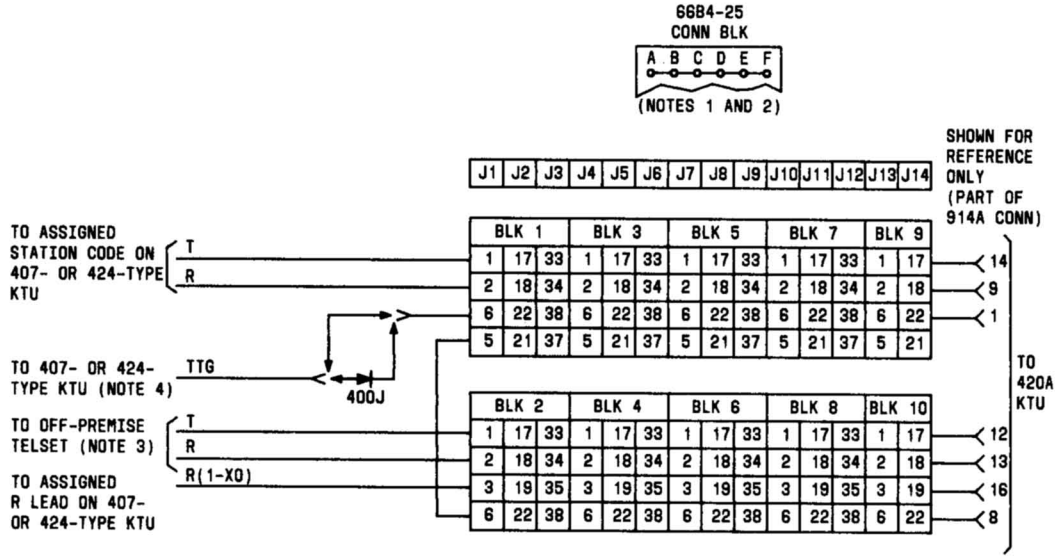

OPTION STRAPPING ON OPTION BLK

FEATURES		OPTION	STRAP TERMINALS
AUDIBLE SIGNALS	AC BUZZER, 18V±,10V±	J	1 TO 4, 7 TO 8
	DC BUZZER, 24 VDC	K	
	RINGER, 105V± STEADY	M	2 TO 4, 7 TO 8

NOTES:

1. COLUMN ASSIGNMENT FOR LEFT-HAND BLK (1,3,5,7,9) IS A-E AND FOR RIGHT-HAND BLK (2,4,6,8,10) IS F-B.
2. TERMINALS 33 THRU 48 ARE SPARES ON CONN BLKS 9 AN 10.
3. MAXIMUM STATION CONDUCTOR LOOP IS 500 OHMS, OFF-PREMISE TELEPHONE SET MAY BE EQUIPPED WITH A "TOUCH-TONE" DIAL PROVIDED THE INTERCOM CIRCUIT IS SO EQUIPPED.
4. PROVIDE A 400J DIODE FOR EACH 420A KTU INSTALLED WHEN THE INTERCOM IS EQUIPPED WITH THE "TOUCH-TONE" ADAPTER (426/427-TYPE, 440A OR 478B KTU). DIODE NOT REQUIRED WITH 494A KTU.

Fig. 38—Connections for 420A KTU (Long Line Circuit) in 598-Type Panel

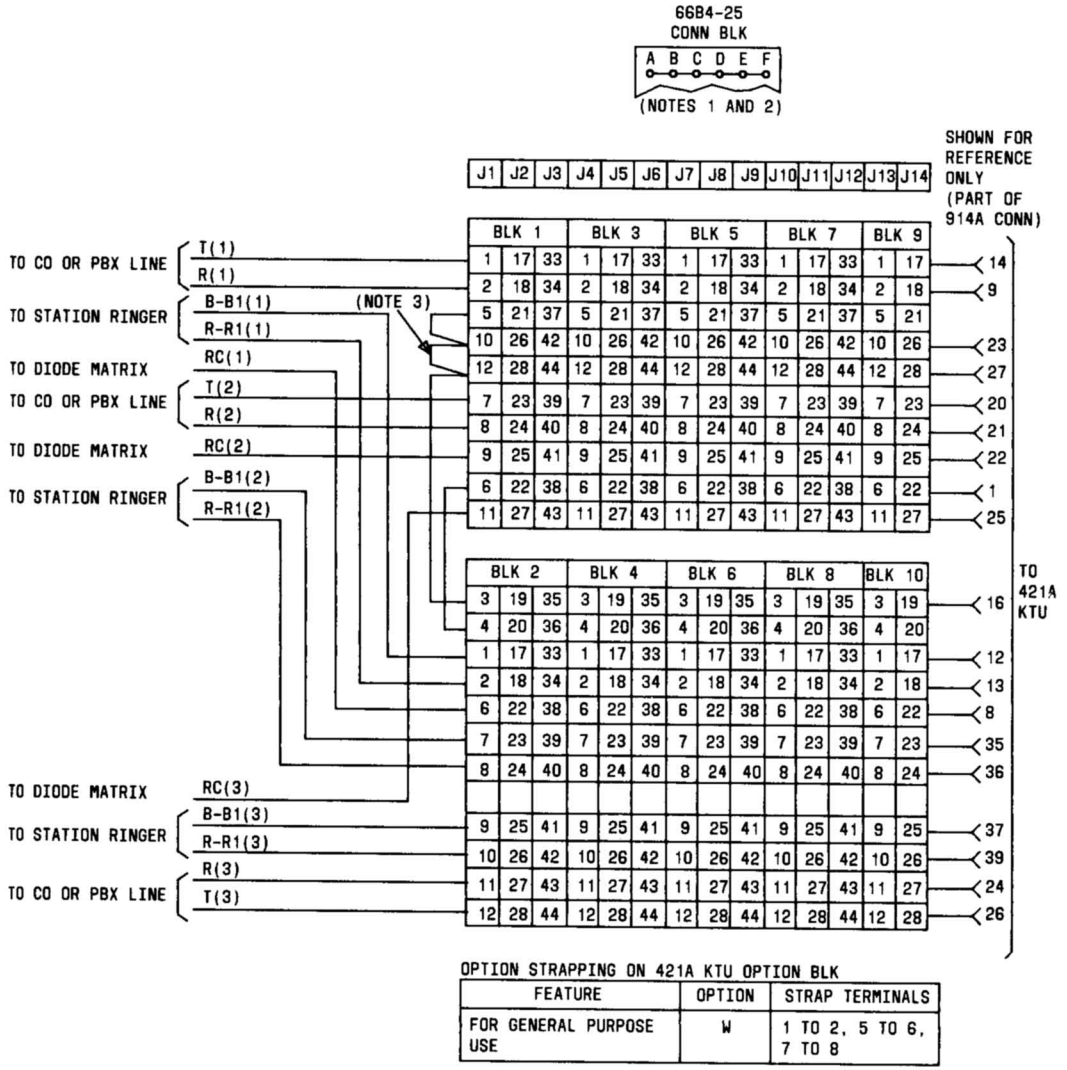

OPTION STRAPPING ON 421A KTU OPTION BLK

FEATURE	OPTION	STRAP TERMINALS
FOR GENERAL PURPOSE USE	W	1 TO 2, 5 TO 6, 7 TO 8

NOTES:
1. COLUMN ASSIGNMENT FOR LEFT-HAND BLK (1,3,5,7,9) IS A-E AND FOR RIGHT HAND BLK (2,4,6,8,10) IS F-B.
2. TERMINALS 33 THRU 48 ARE SPARES ON CONN BLKS 9 AND 10.
3. ADD STRAPS ACCORDING TO NUMBER OF LINES SERVED.

Fig. 39—Connections for 421A KTU (Power Failure Transfer Circuit) in 598-Type Panel

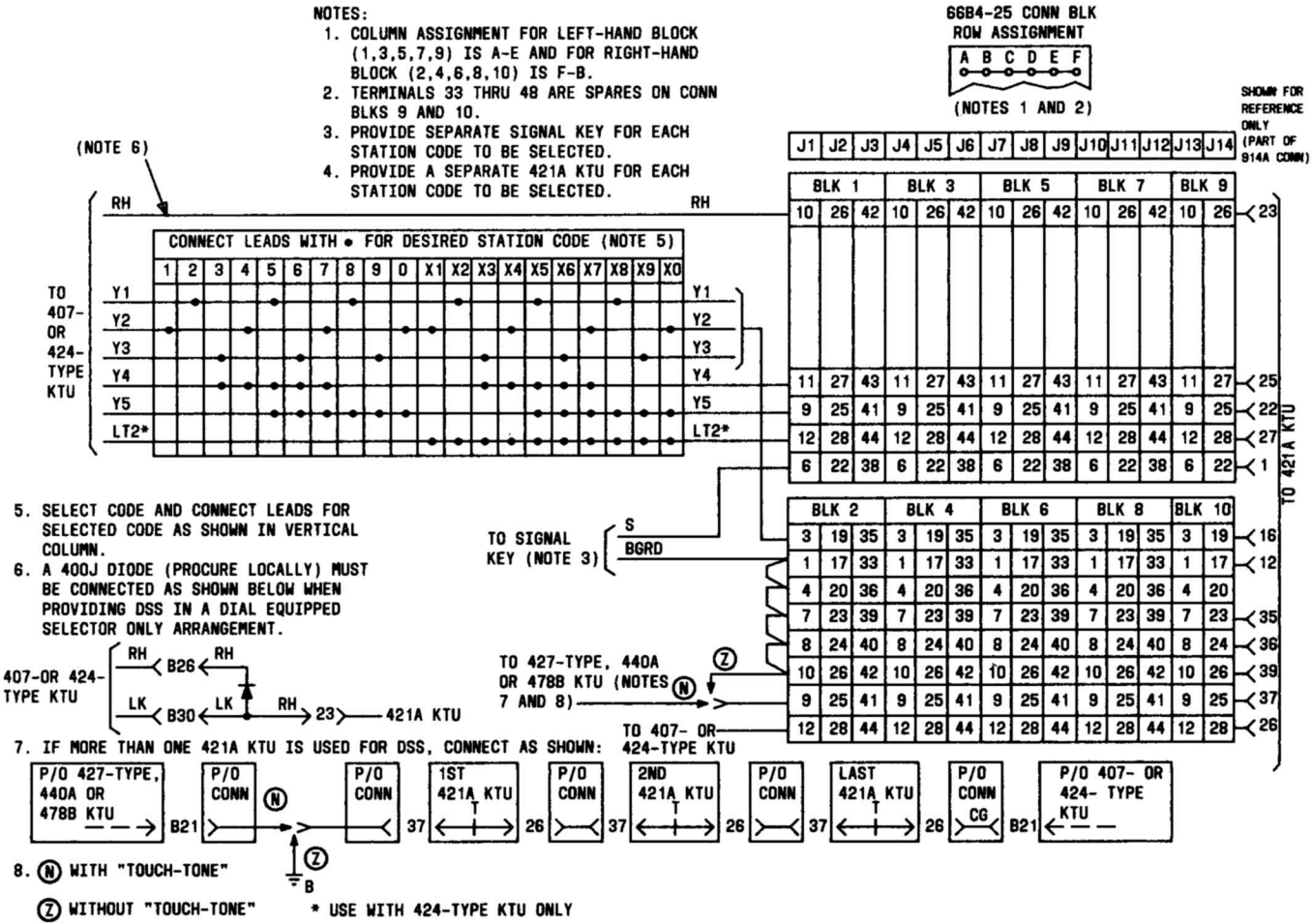

Fig. 40—Connections for 421A KTU (Wired for DSS Feature for Dial Intercom Line) in 598-Type Panel

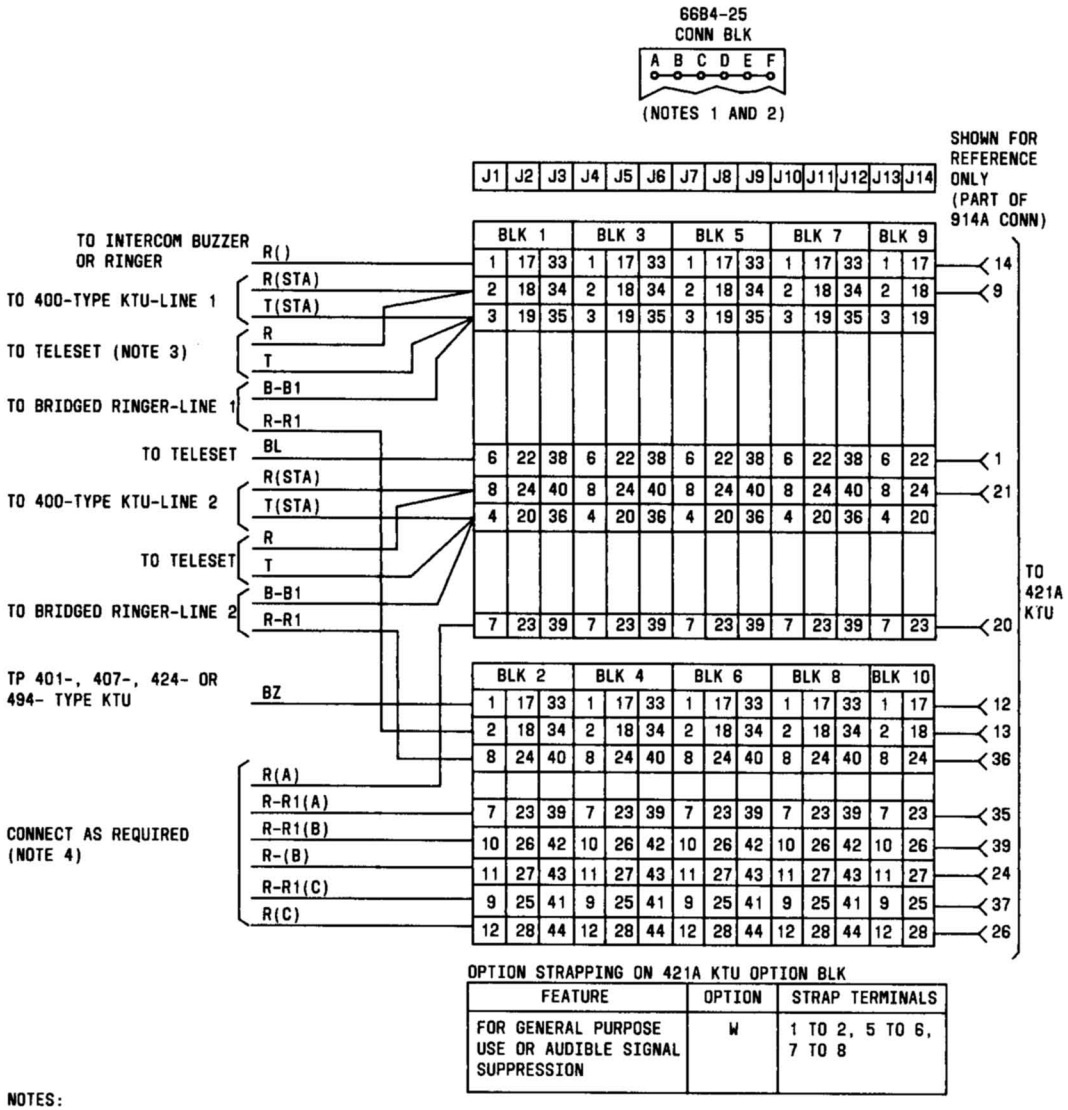

OPTION STRAPPING ON 421A KTU OPTION BLK

FEATURE	OPTION	STRAP TERMINALS
FOR GENERAL PURPOSE USE OR AUDIBLE SIGNAL SUPPRESSION	W	1 TO 2, 5 TO 6, 7 TO 8

NOTES:
1. COLUMN ASSIGNMENT FOR LEFT-HAND BLK (1,3,5,7,9) IS A-E AND FOR RIGHT HAND BLK (2,4,6,8,10) IS F-B.
2. TERMINALS 33 THRU 48 ARE SPARES ON CONN BLKS 9 AND 10.
3. TELEPHONE SET MUST BE EQUIPPED WITH STATION BUSY OPTION.
4. LETTERS IN PARENTHESES ARE FOR REFERENCE ONLY. CONNECT AS REQUIRED TO SUPPRESS BRIDGED RINGERS ON ADDITIONAL LINES.

Fig. 41—Connections for 421A KTU (Audible Signal Suppression Circuit) in 598-Type Panel Arranged to Suppress Bridged Ringing and Intercom Audible Signal

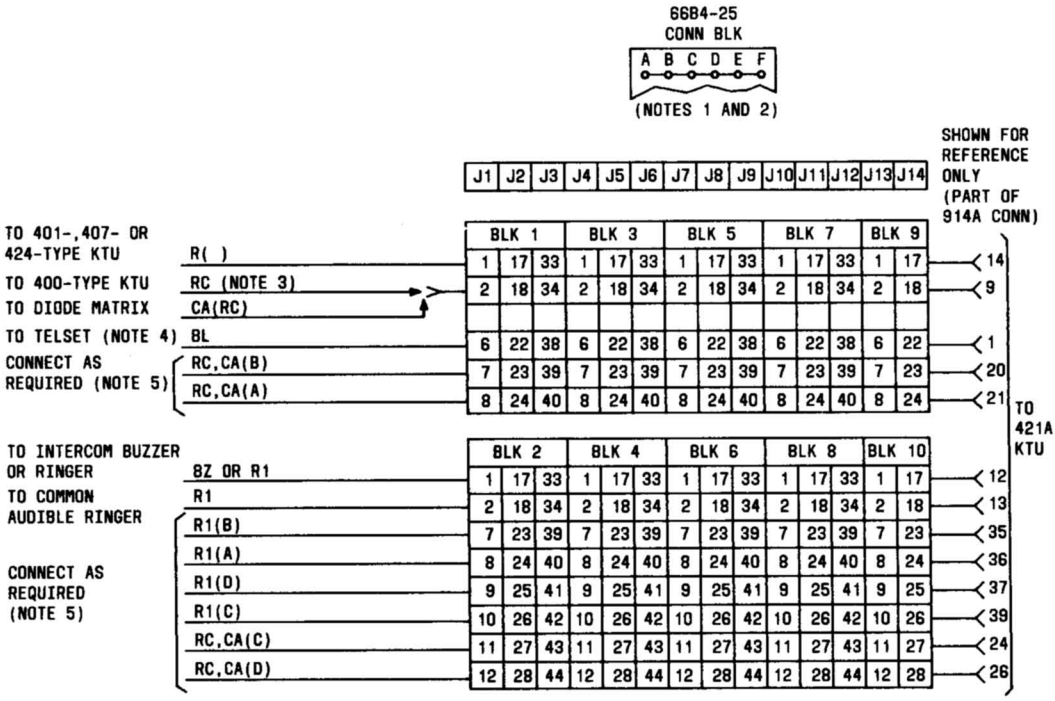

OPTION STRAPPING ON 421A KTU OPTION BLK

FEATURES	OPTION	STRAP TERMINALS
FOR GENERAL PURPOSE USE OR AUDIBLE SIGNAL SUPPRESSION	W	1 TO 2, 5 TO 6, 7 TO 8

NOTES:
1. COLUMN ASSIGNMENT FOR LEFT-HAND BLK (1,3,5,7,9) IS A-E AND FOR RIGHT-HAND BLK (2,4,6,8,10) IS F-B.
2. TERMINALS 33 THRU 48 ARE SPARES ON CONN BLKS 9 AN 10.
3. REFER TO 400-TYPE KTU FOR OPTION.
4. TELEPHONE SET MUST BE EQUIPPED WITH STATION BUSY OPTION.
5. LETTERS IN PARENTHESIS ARE FOR REFERENCE ONLY.

Fig. 42—Connections for 421A KTU (Audible Signal Suppression Circuit) in 598-Type Panel Arranged to Suppress Common Audible Ringing and Intercom Audible Signal

OPTION STRAPPING 421A KTU

OPTION	STRAP TERMINALS
W	1 TO 2, 7 TO 8

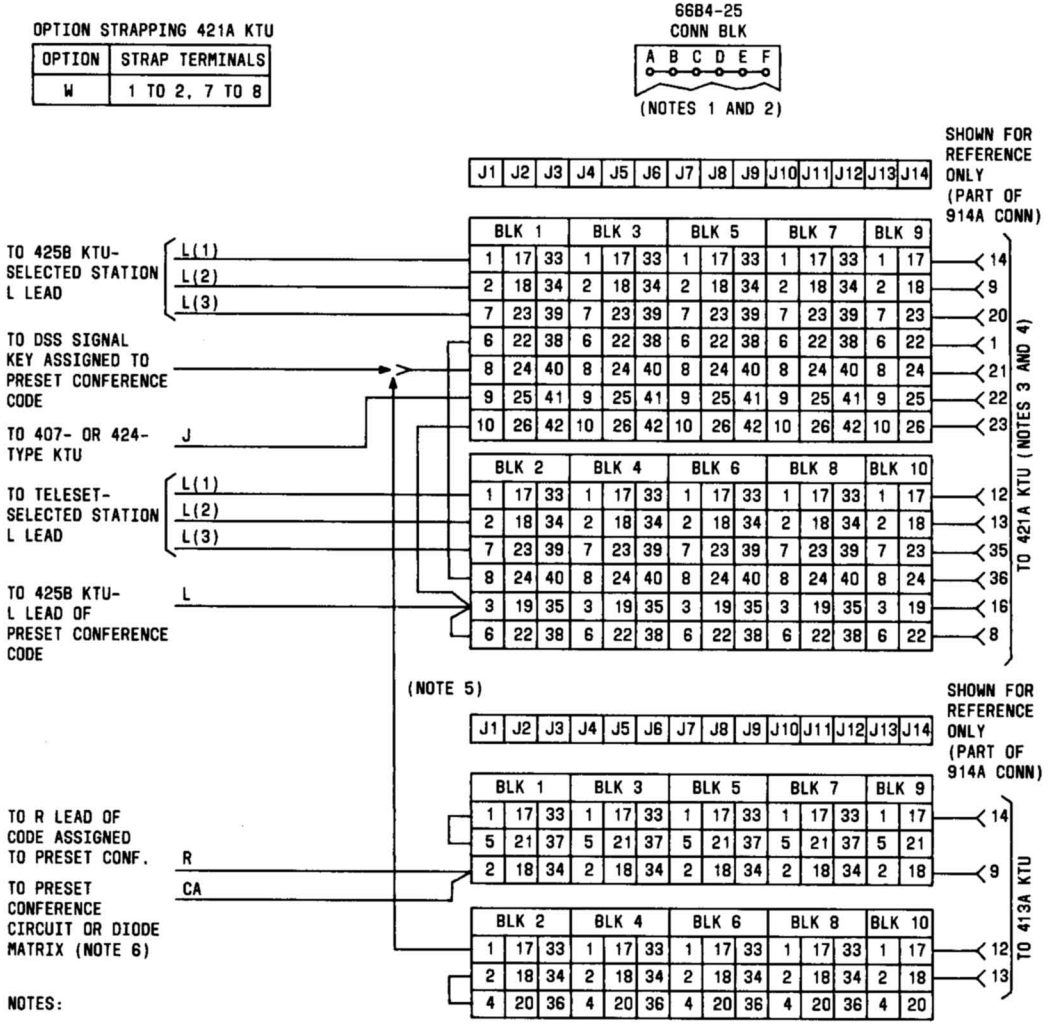

1. COLUMN ASSIGNMENT FOR LEFT-HAND BLK (1,3,5,7,9) IS A-E AND FOR RIGHT-HAND BLK (2,4,6,8,10) IS F-B.
2. TERMINALS 33 THRU 48 ARE SPARES ON CONN BLKS 9 AND 10.
3. WHEN THIS CIRCUIT IS PROVIDED, RING VOLTAGE (150V±) MUST BE USED TO OPERATE THE AUDIBLE SIGNALS CONNECTED TO THE DIAL INTERCOM LINE.
4. "W" OPTION MUST BE PROVIDED ON THE 421A KTU.
5. PROVIDE THE 413A KTU ONLY WHEN ACCESS TO THE PRESET CONFERENCE IS BY DIAL CODE OR BY DIAL CODE AND DSS. DO NOT PROVIDE THE 413A KTU WHEN ACCESS TO THE PRESET CONFERENCE IS LIMITED TO DSS.
6. THE "CA" LEAD MUST CONNECT TO THE DIODE MATRIX WHETHER OR NOT THE 413A KTU IS PROVIDED.

Fig. 43—Connections for 421A KTU or 413A KTU (Wired for Preset Conference Circuit for Deluxe Dial Intercom Line) in 598-Type Panel

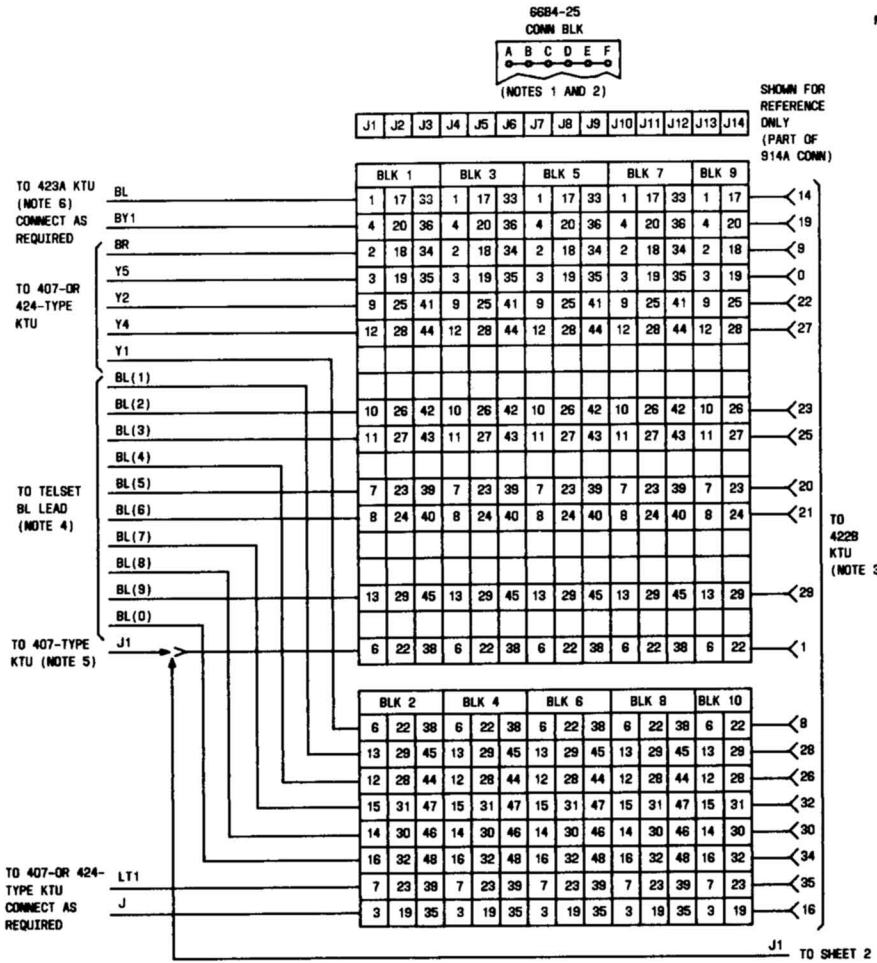

NOTES:

1. COLUMN ASSIGNMENT FOR LEFT-HAND BLK (1, 3, 5, 7, 9) IS A-E AND FOR RIGHT-HAND BLK (2, 4, 6, 8, 10) IS F-B.
2. TERMINALS 33 THRU 48 ARE SPARES ON CONN BLKS 8 AND 19.
3. PROVIDE SEPARATE 422B KTU FOR THE UNITS GROUPS (1-0, SINGLE DIGIT NOS.) AND FOR THE TENS GROUP (X1-X0, TWO DIGIT NOS.).
4. PROVIDE AND INSTALL A DIODE IN THE A LEAD OF THE ASSOCIATED TELSETS. FOR CONNECTION, USE THE STATION BUSY OPTION AS SHOWN IN THE CONNECTIN SECTION OF THE TYPE SET USED.
5. CONNECT J1 LEAD OF UNITS 422B KTU WHEN A 407-TYPE KTU IS PROVIDED FOR THE DIAL INTERCOM CIRCUIT. WHEN A 424-TYPE KTU IS PROVIDED, STRAP THE J1 LEAD OF UNITS 422B KTU TO J2 LEAD OF TENS 422B KTU.
6. 423A KTU ASSOCIATED WITH SAME DIAL INTERCOM AS THE 422B KTUS.

Fig. 44—Connections for 422B KTU (Station Busy Selector Circuit) in 598-Type Panel (Sheet 1 of 2)

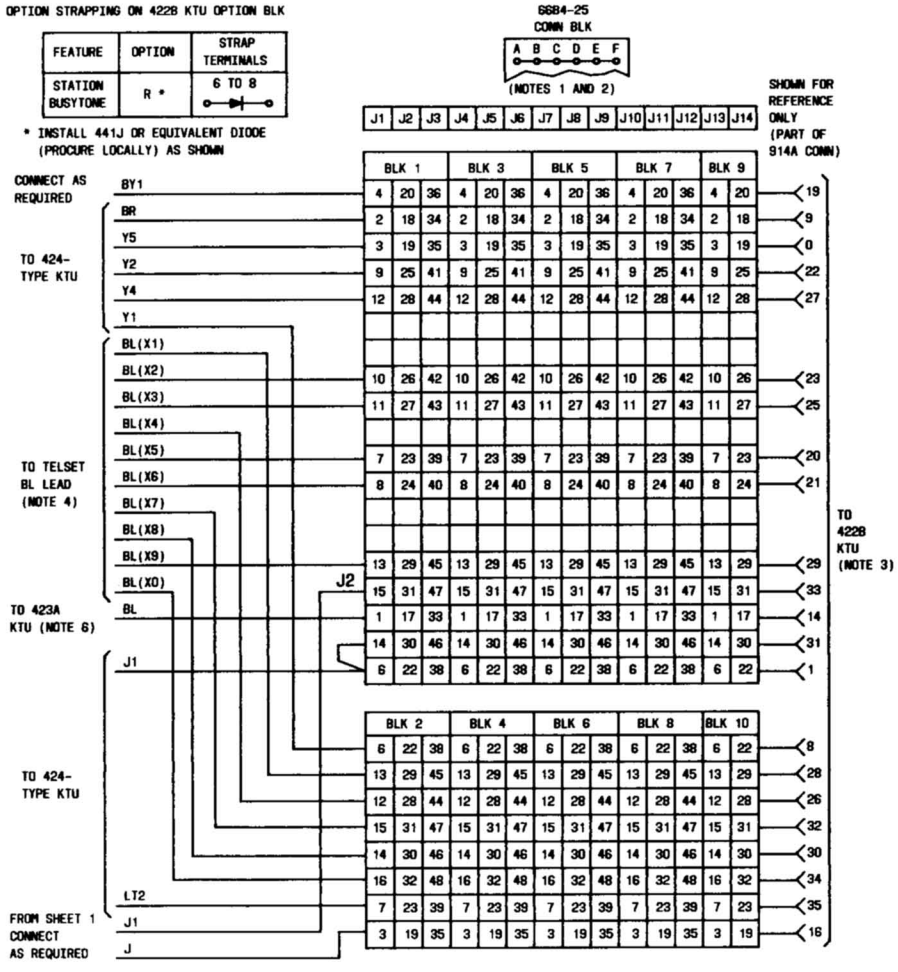

Fig. 44—Connections for 422B KTU (Station Busy Selector Circuit) in 598-Type Panel (Sheet 2 of 2)

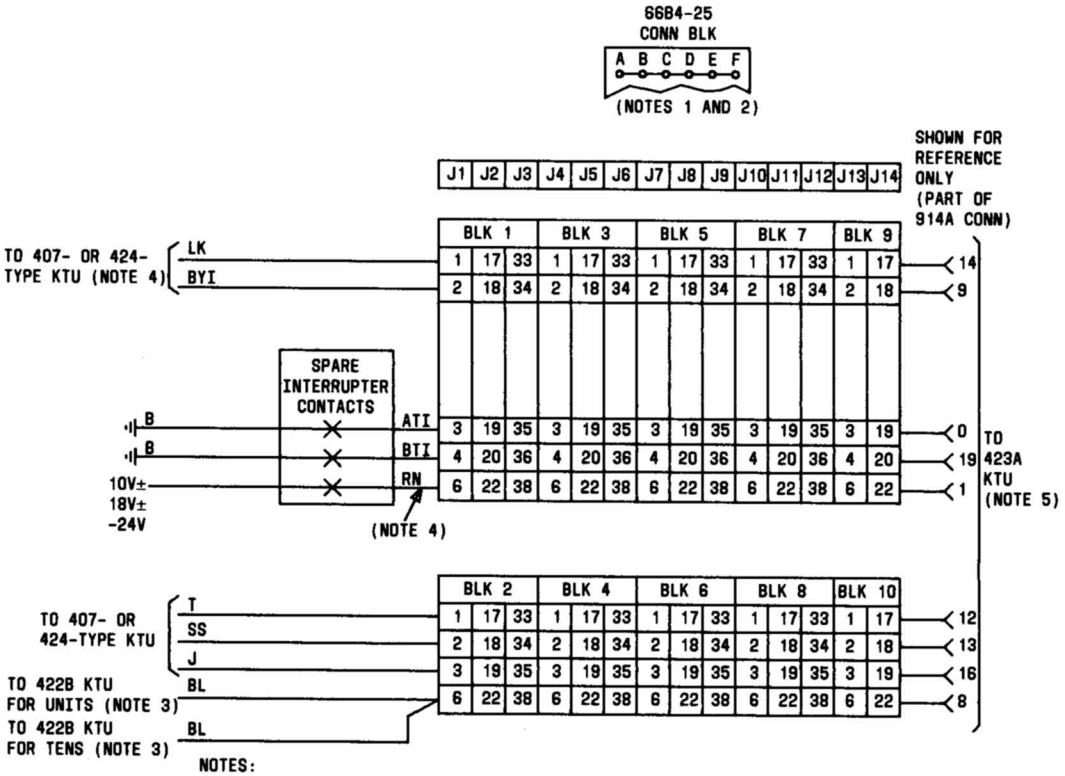

NOTES:

1. COLUMN ASSIGNMENT FOR LEFT-HAND BLK (1,3,5,7,9) IS A-E AND FOR RIGHT-HAND BLK (2,4,6,8,10) IS F-B.
2. TERMINALS 33 THRU 48 ARE SPARES ON CONN BLKS 9 AN 10.
3. 422B KTUS ASSOCIATED WITH THE SAME DIAL INTERCOM AS THE 423A KTU.
4. IF INTERRUPTED 105V± IS USED FOR DIAL INTERCOM, DO NOT CONNECT THIS LEAD. IF BUZZERS ARE USED FOR DIAL INTERCOM, AUDIBLE SIGNAL IS SUPPLIED ON THIS LEAD VIA SPARE INTERRUPTER CONTACTS TO PIN 1 OF 423A KTU ON 423A KTU OPTION BLK, STRAP TERMINAL 6 TO 7 AND REMOVE (R) OPTION STRAP BETWEEN 4 AND 6.
5. TURN KNURLED WHEEL TO FULL CLOCKWISE POSITION FOR MINIMUM DIAL TONE VOLUME AND TO FULL COUNTERCLOCKWISE POSITION FOR MAXIMUM DIAL TONE VOLUME.

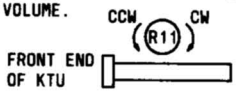

FEATURES	423A	
	OPTION	STRAP
DIAL TONE	T	1-2
STATION BUSY TONE	R	4-6
AUDIBLE RINGBACK	S	*

* REQUIRES NO STRAPPING ON KTU

Fig. 45—Connections for 423A KTU (Dial Tone, Busy Tone, and Audible Ringback Tone Circuit) in 598-Type Panel

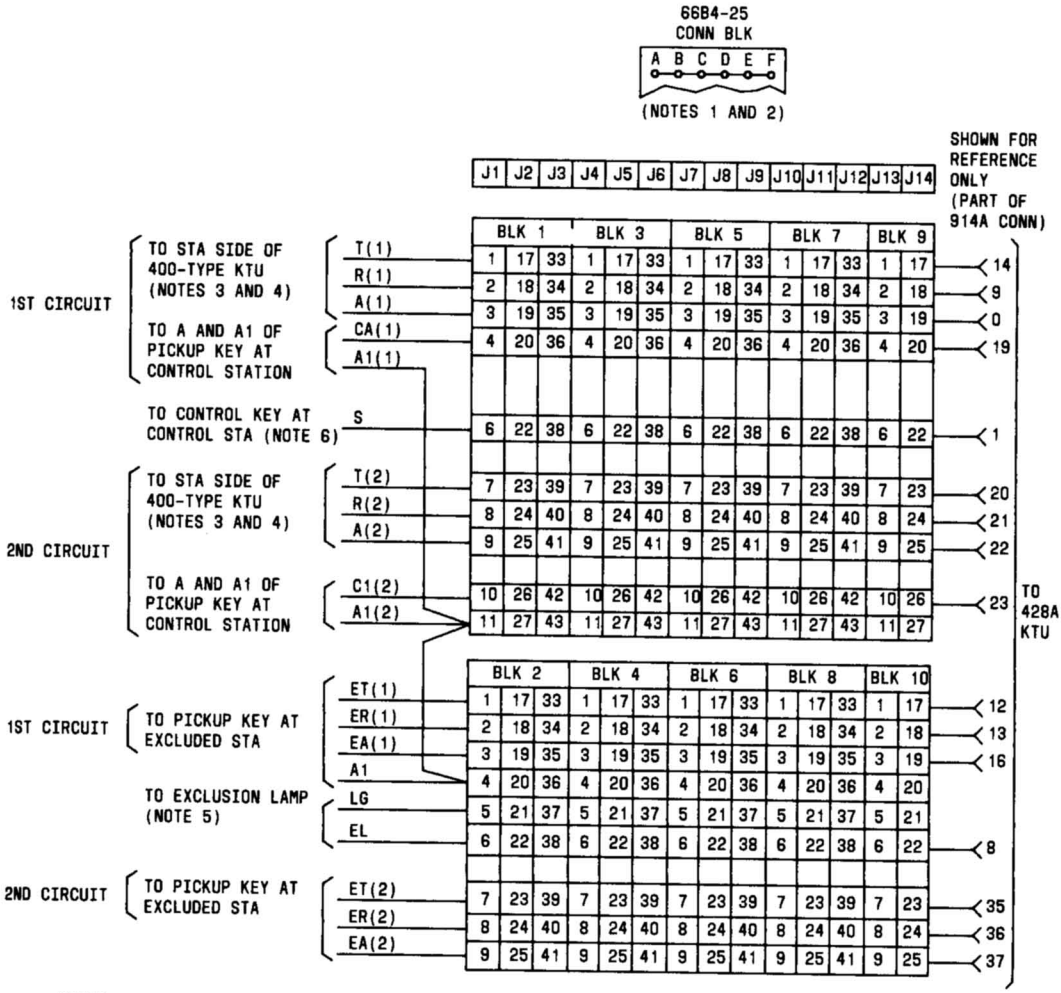

NOTES:

1. COLUMN ASSIGNMENT FOR LEFT-HAND BLK (1,3,5,7,9) IS A-E AND FOR RIGHT HAND BLK (2,4,6,8,10) IS F-B.
2. TERMINALS 33 THRU 48 ARE SPARES ON CONN BLKS 9 AND 10.
3. ASSOCIATED LAMP LEADS FROM THE 400-TYPE KTU TERMINATE DIRECTLY TO TEL SETS.
4. T AND R LEAD FROM STATION SIDE OF 400-TYPE KTU ALSO TERMINATES TO TEL SET OF CONTROL STATION. "A" LEAD FROM STATION SIDE OF 400-TYPE KTU MUST CONNECT THROUGH 428A KTU BEFORE CONNECTING TO TEL SET (CA(1) OR CA(2) LEAD).
5. LAMP INDICATING AN EXCLUSION CIRCUIT IS ACTIVATED
6. CONTROL KEY MAY BE A LOCKING OR NONLOCKING TYPE.

Fig. 46—Connections for 428A KTU (Multiline Exclusion Circuit) in 598-Type Panel

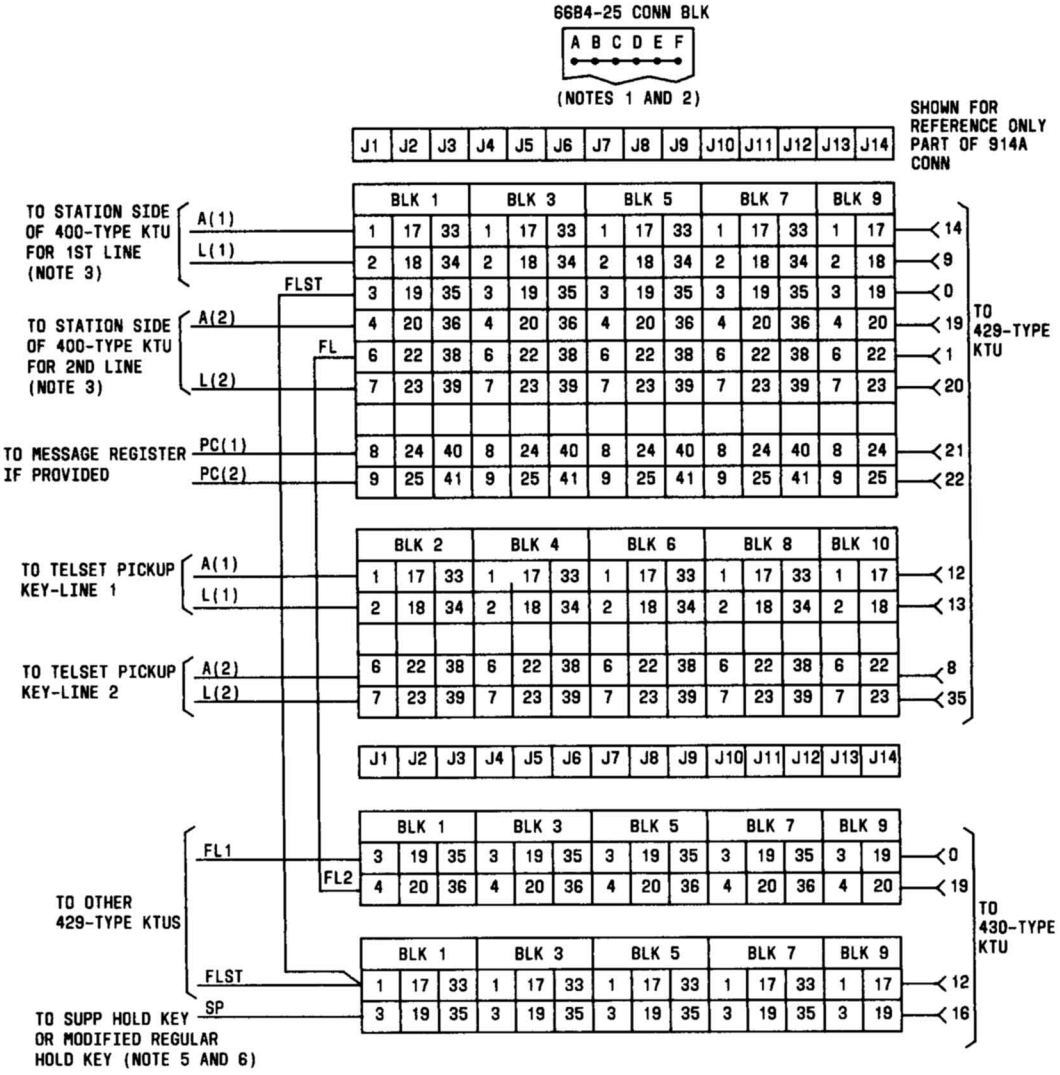

Fig. 47—Connections for 429-Type KTU (Supplementary Hold Detector Circuit) and 430A KTU (Flutter Generator Circuit) in 598-Type Panel (Sheet 1 of 2)

NOTES:

1. COLUMN ASSIGNMENT FOR LEFT-HAND BLK (1,3,5,7,9) IS A-E AND FOR RIGHT-HAND BLK (2,4,6,8,10) F-B.
2. TERMINALS 33 THRU 48 ARE SPARES ON CONN BLKS 9 AND 10.
3. T AND R LEADS FROM STATION SIDE OF 400-TYPE KTU TERMINATE DIRECTLY TO THE ASSIGNED PICKUP KEY AT TELEPHONE SET.
4. LIMITATIONS OF 430A KTU ARE AS FOLLOWS:
   (A) FL1 OR FL2 CAN SERVE A MAXIMUM OF 50 LAMPS (51A) EACH. DIVIDE LAMPS AS EVENLY AS POSSIBLE BETWEEN THE TWO LEADS.
   (B) SP LEAD CAN CONNECT TO A MAXIMUM OF 20 STATIONS.
5. ANY TELEPHONE SET EQUIPPED WITH A HOLD KEY HAVING A SET OF TRANSFER CONTACTS AND SUFFICIENT CORD LEADS CAN INITIATE I HOLD. REWIRE HOLD KEY ACCORDING TO CONNECTION SECTION OF TYPE SET USED.
6. WHEN USED WITH CONCENTRATOR SETS AND THE 657 KEY MODULE CONNECT AS FOLLOWS:

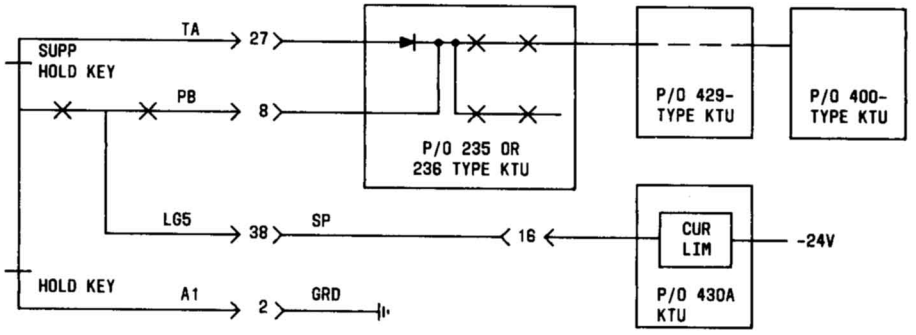

Fig. 47—Connections for 429-Type KTU (Supplementary Hold Detector Circuit) and 430A KTU (Flutter Generator Circuit) in 598-Type Panel (Sheet 2 of 2)

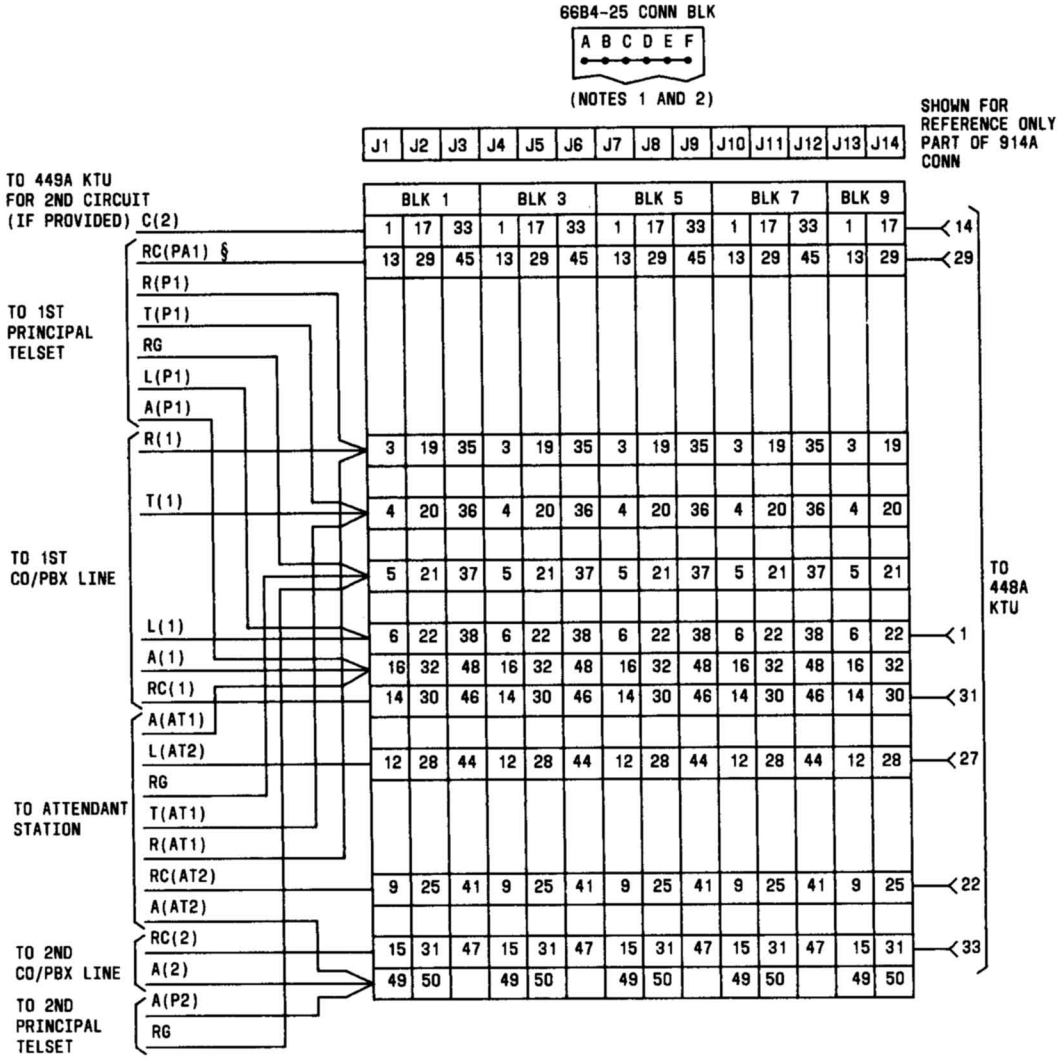

Fig. 48—Connections for 448A KTU (Variable Delay Timer Circuit) in 598-Type Panel (Sheet 1 of 2)

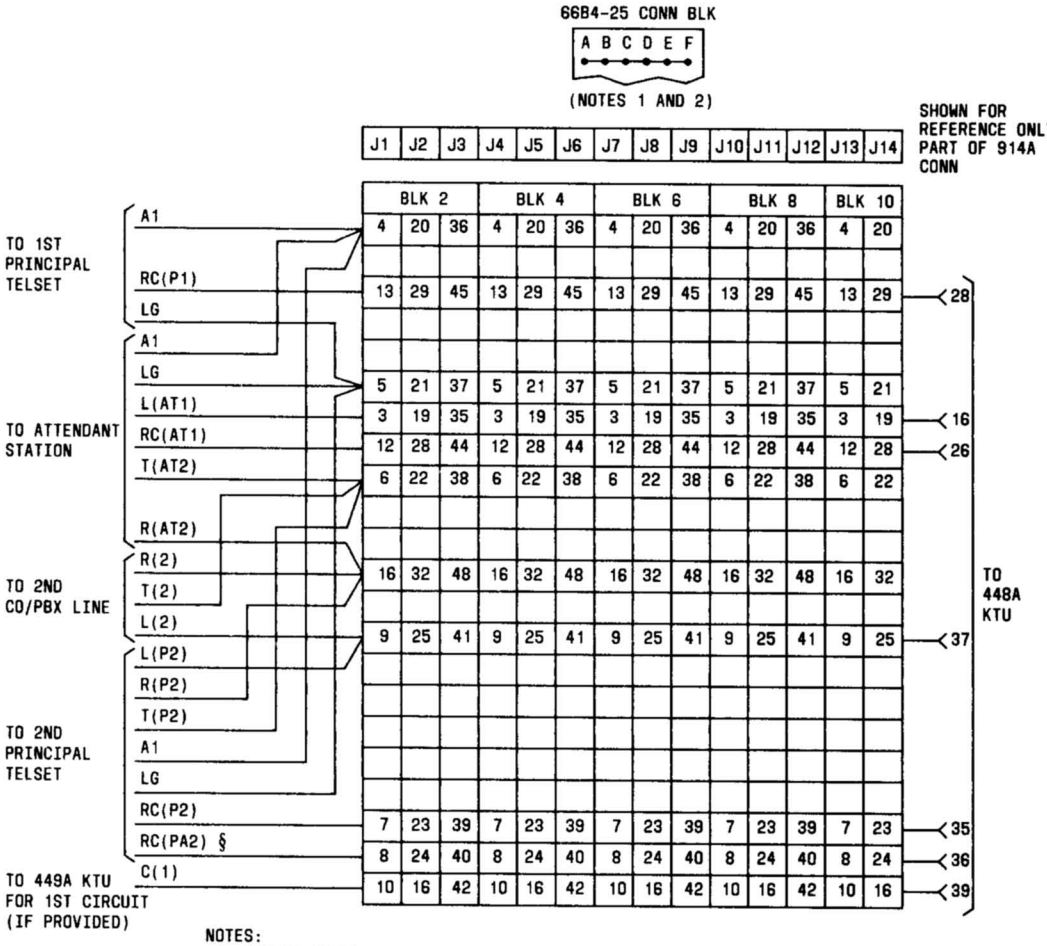

NOTES:

1. COLUMN ASSIGNMENT FOR LEFT-HAND BLK (1, 3, 5, 7, 9) IS A-E AND FOR RIGHT-HAND BLK (2, 4, 6, 8, 10) IS F-B.
2. TERMINALS 33 THRU 48 ARE SPARES ON CONN BLKS 9 AND 10.

§ USE FOR COMMON AUDIBLE SIGNALING WHEN RINGER IS NOT TO BE CUT OFF.

OPTION STRAPPING ON 448A KTU OPTION BLOCK

FEATURES		OPTION	STRAP TERMINALS	
			1ST CKT	2ND CKT
AUDIBLE SIGNALS	INTERRUPTED RING	W	5 TO 8	1 TO 4
	STEADY RING	T	6TO 8	2 TO 4
	STEADY BUZZER	X	9 TO 8	3 TO 4

Fig. 48—Connections for 448A KTU (Variable Delay Timer Circuit) in 598-Type Panel (Sheet 2 of 2)

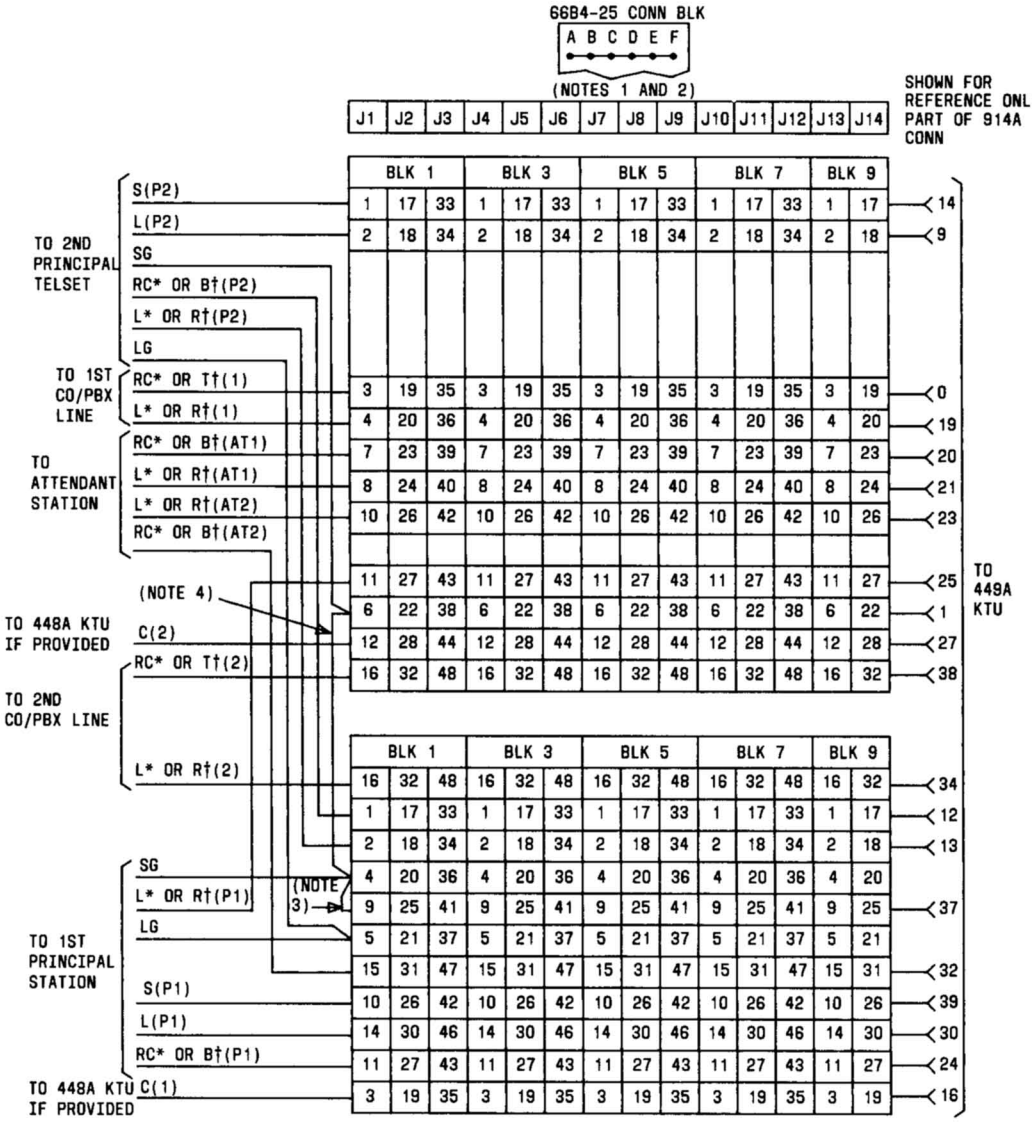

NOTES:
1. COLUMN ASSIGNMENT FOR LEFT-HAND BLK (1,3,5,7,9) IS A-E AND FOR RIGHT-HAND BLK (2,4,6,8,10) IS F-B.
2. TERMINALS 33 THRU 48 ARE SPARES ON CONN BLKS 9 AND 10.
3. ADD STRAP IF 448A KTU IS USED WITH 2ND CKT OF 449A KTU. NONE OF THE RINGER CONNECTIONS SHOWN ARE REQUIRED IF 448A KTU IS PROVIDED.
4. ADD STRAP IF 448A KTU IS USED WITH 1ST CKT OF 449A KTU. IF 448A KTU IS PROVEDED, NONE OF THE RINGER CONNECTIONS SHOWN ARE REQUIRED.

* FOR COMMON AUDIBLE RINGING
† FOR LINE RINGING

Fig. 49—Connections for 449A KTU (Immediate Transfer Control Circuit) in 598-Type Panel

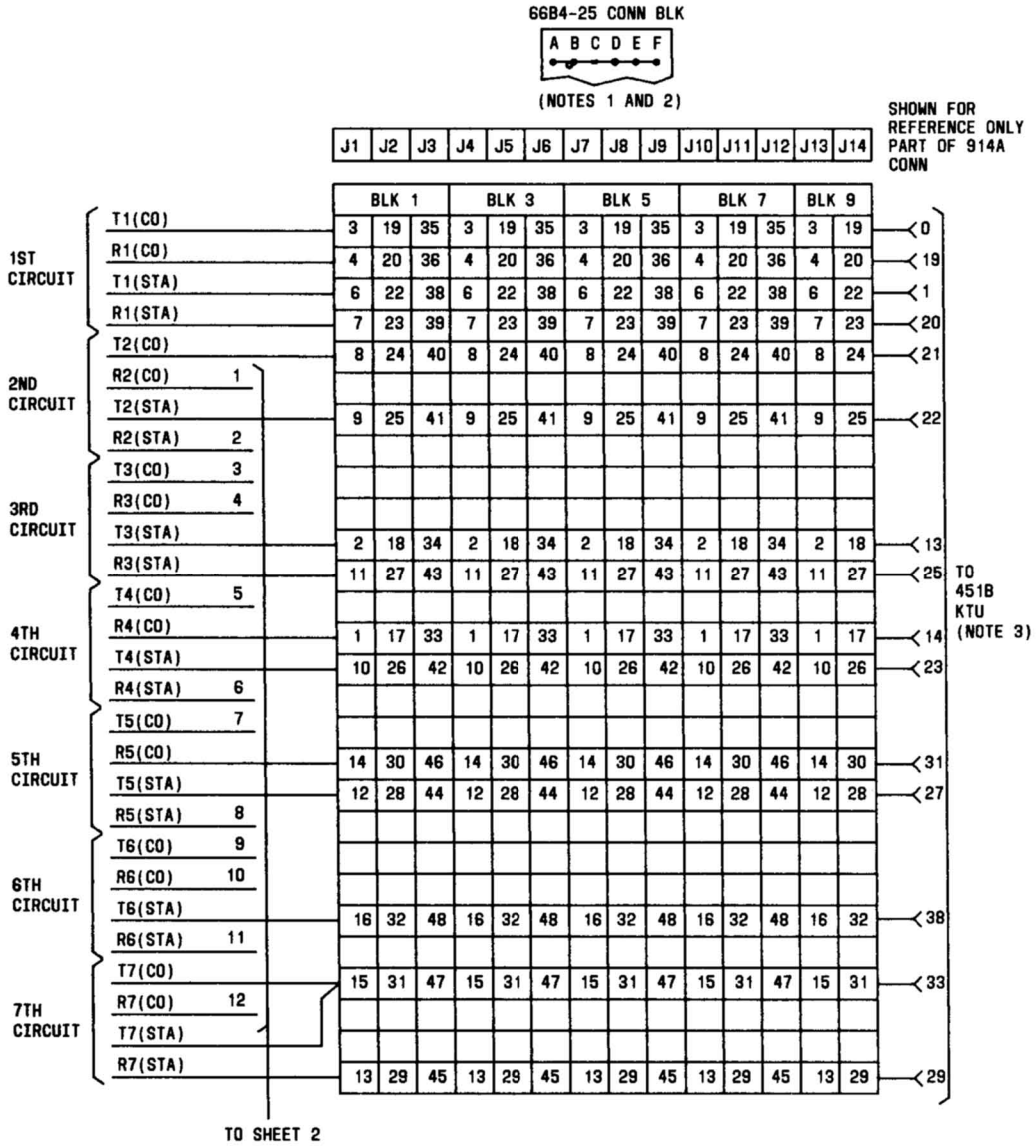

Fig. 50—Connections for 451B KTU (Music-On-Hold) in 598-Type Panel (Sheet 1 of 2)

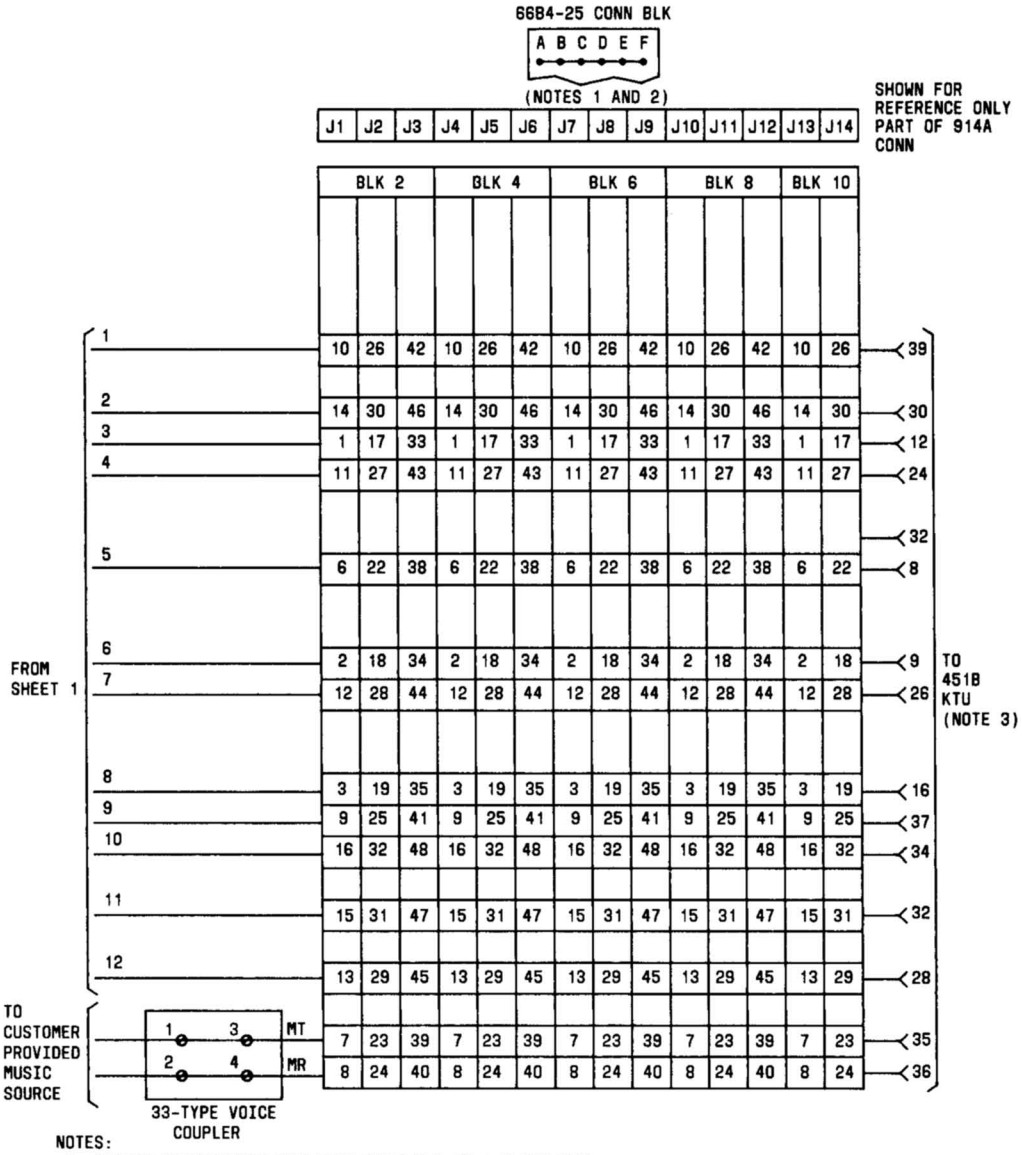

NOTES:

1. COLUMN ASSIGNMENTS FOR LEFT-HAND BLK IS A-E AND FOR RIGHT-HAND BLK F-B.
2. TERMINALS 33 THRU 48 ARE SPARES ON CONN BLKS 9 AND 10.
3. 400H KTU NOT COMPATIBLE WITH 451B KTU.

Fig. 50—Connections for 451B KTU (Music-On-Hold) in 598-Type Panel (Sheet 2 of 2)

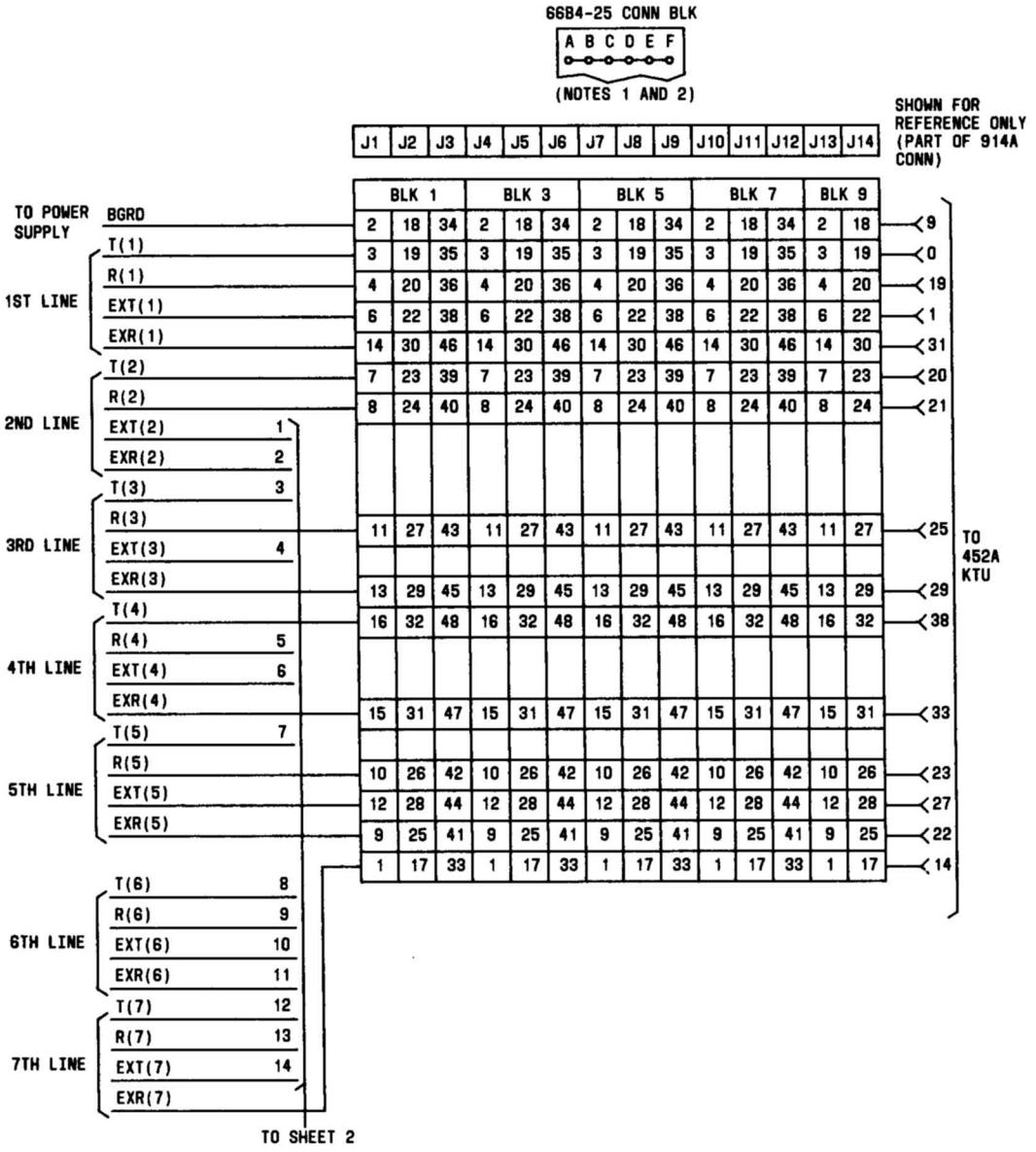

Fig. 51—Connections for 452A KTU (Power Failure Ringing Circuit) in 598-Type Panel (Sheet 1 of 2)

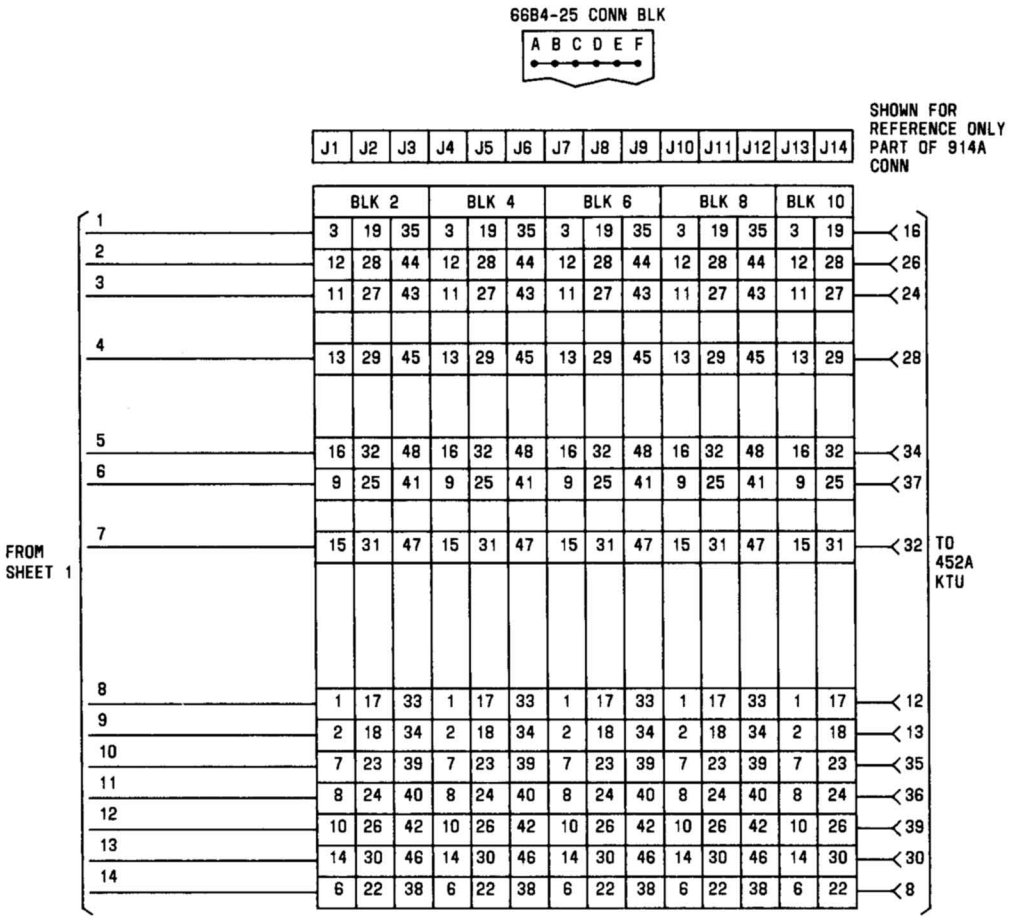

NOTES:
1. COLUMN ASSIGNMENTS FOR LEFT-HAND BLK (1, 3, 5, 7, 9) BLK IS A-E AND FOR RIGHT-HAND BLK (2, 4, 6, 8, 10) IS F-B.
2. TERMINALS 33 THRU 48 ARE SPARES ON CONN BLKS 9 AND 10.

Fig. 51—Connections for 452A KTU (Power Failure Ringing Circuit) in 598-Type Panel (Sheet 2 of 2)

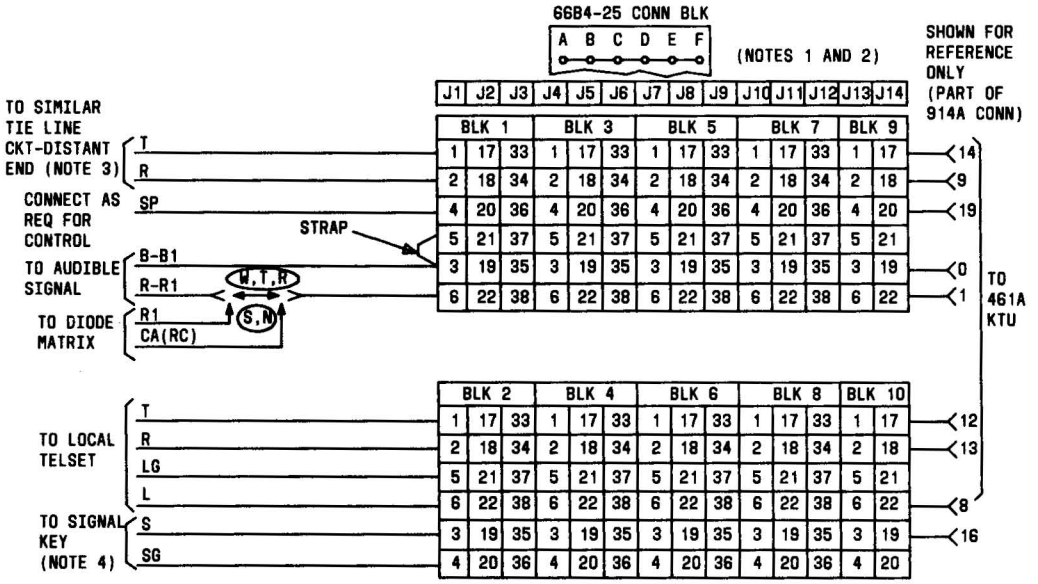

NOTES:

1. COLUMN ASSIGNMENT FOR LEFT-HAND BLK (1,3,5,7,9) IS A-E AND FOR RIGHT-HAND BLK (2,4,6,8,10) IS F-B.
2. TERMINALS 33 THRU 48 ARE SPARES ON CONNECTING BLOCKS 9 AND 10.
3. PRIVATE LINE CIRCUIT AT DISTANT END MAY BE A 414A KTU (MD), 416A KTU, OR ANY OTHER TYPE PRIVATE LINE UNIT REQUIRING RINGING VOLTAGE FOR THE RING UP CIRCUIT AND FURNISHING RINGING VOLTAGE FROM THE SIGNAL CIRCUIT.
4. SIGNAL KEY MAY BE A CONVERTED PICKUP KEY OR ANY EXTERNAL NONLOCKING KEY.

OPTION STRAPPING ON 461A KTU OPTION BLK

FEATURES			OPTION	STRAP TERMINALS
	UNDER CONTROL OF TIME-OUT CIRCUIT (B RELAY)	INTERRUPTED RING	W	7 TO 8
		STEADY RING	T	6 TO 7
		COMMON WITH DIODE MATRIX CONTROL	S	7 TO 8
		STEADY RING	R	4 TO 6
		COMMON WITH DIODE MATRIX CONTROL	N	
TIME-OUT	10 SECONDS		X	1 TO 2
	16 SECONDS		Z	2 TO 3
	23 SECONDS		WITHOUT X OR Z	REMOVE X OR Z STRAPS
AUDIBLE RINGBACK TONE			M	9 TO 10

Fig. 52—Connections for 461A KTU (Manual Signaling, Ringdown Private Line Circuit) in 598-Type Panel

SHOWN FOR REFERENCE ONLY

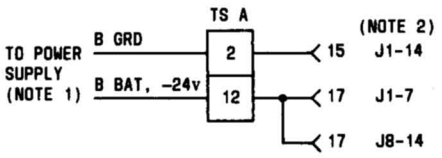

NOTES
1. B BAT AND GRD PROVIDED AS DEDICATED WIRING, NO OTHER CONNECTIONS ARE REQUIRED.
2. KTU MAY BE INSTALLED IN ANY AVAILABLE JACK.

Fig. 53—Connections for 467A KTU (Low Voltage Monitor Circuit) in 598-Type Panel

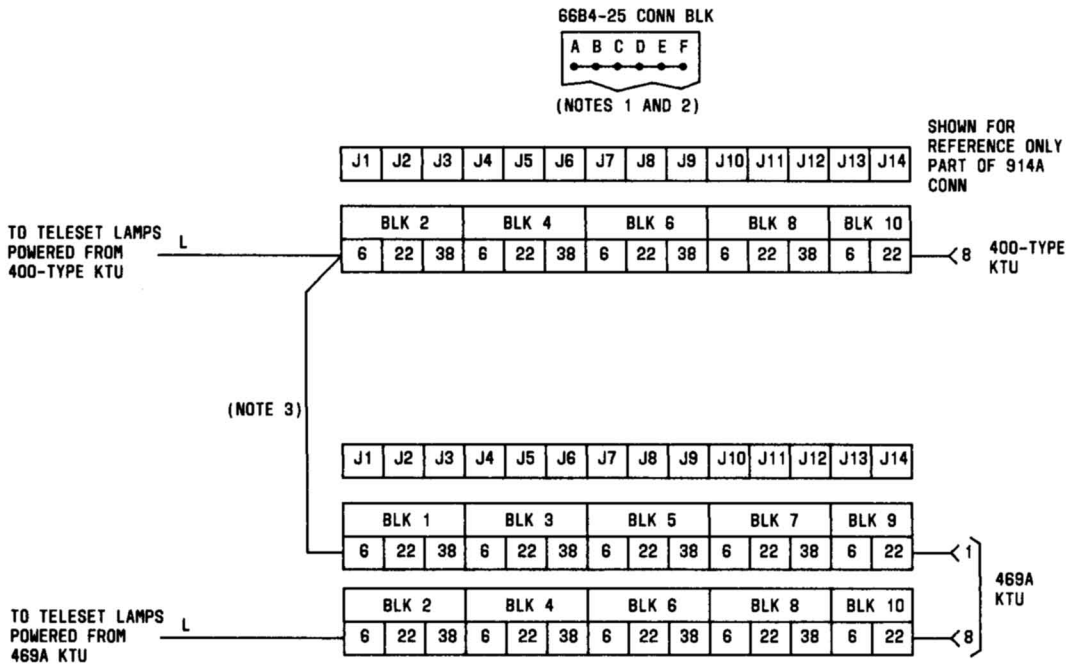

NOTES:
1. COLUMN ASSIGNMENTS FOR LEFT-HAND BLK (1,3,5,7,9) IS A-E AND FOR RIGHT-HAND BLK (2,4,6,8,10) IS F-B.
2. TERMINALS 33 THRU 48 ARE SPARES ON CONN BLKS 9 AND 10.
3. PLACE STRAP FROM CONNECTOR TERMINAL OF 400-TYPE KTU REQUIRING LAMP MULTIPLE TO CONNECTOR TERMINAL OF 469A KTU. ADDITIONAL LAMPS ARE POWERED FROM 469A KTU.

Fig. 54—Connections for 469A KTU (Lamp Extender Circuit) in 598-Type Panel

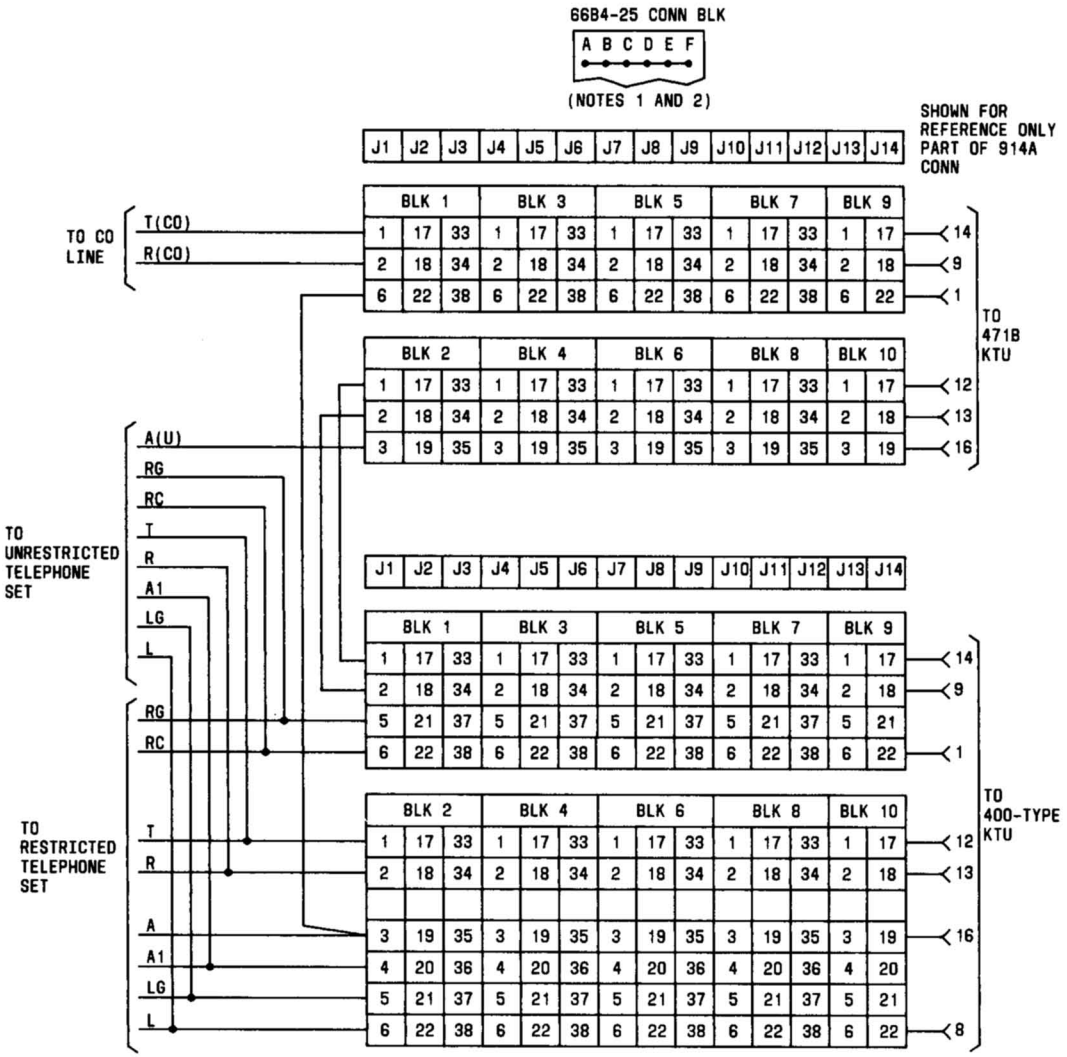

NOTES:
1. COLUMN ASSIGNMENTS FOR LEFT-HAND BLK (1,3,5,7,9) IS A-E AND FOR RIGHT-HAND BLK (2,4,6,8,10) IS F-B.
2. TERMINALS 33 THRU 48 ARE SPARES ON CONN BLKS 9 AND 10.

Fig. 55—Connections for 471B KTU (Battery Reversal Toll Restriction Circuit) in 598-Type Panel

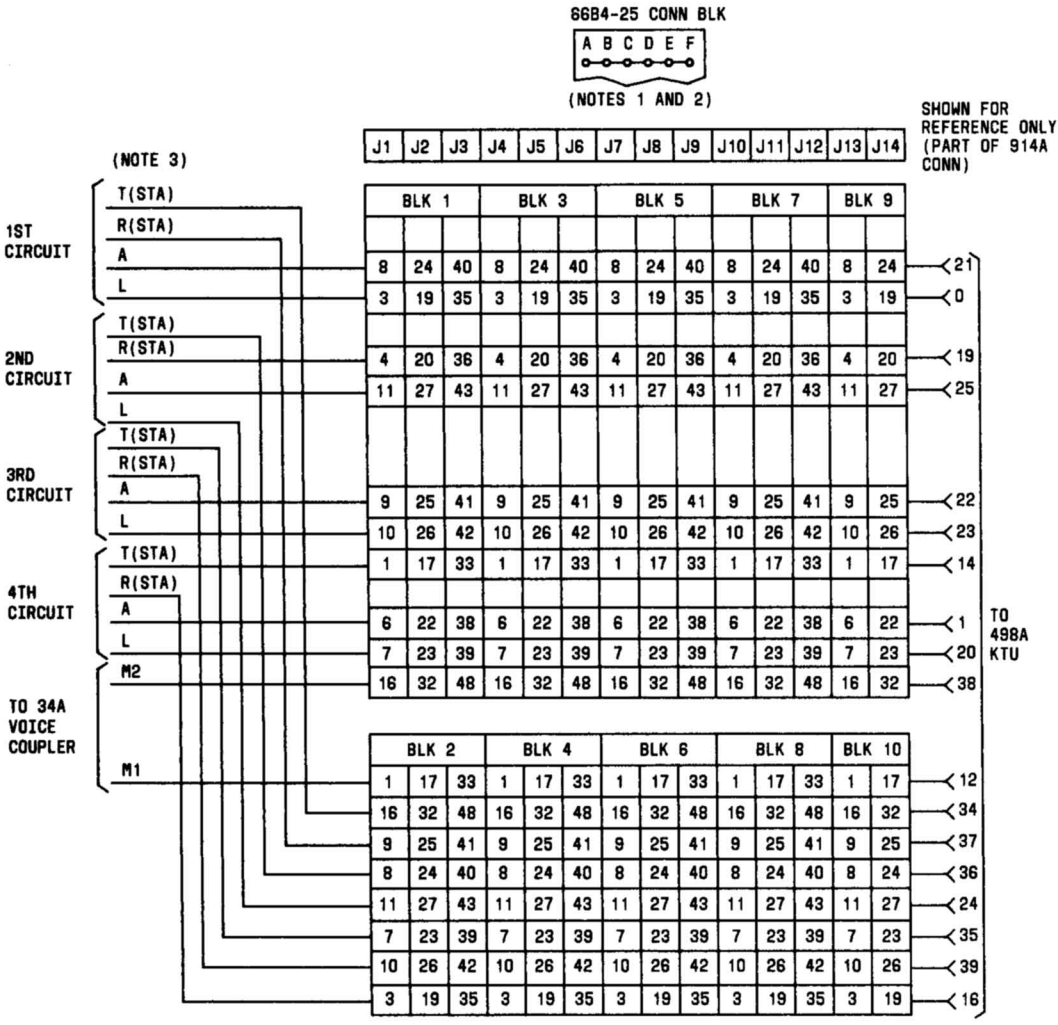

NOTES:
1. COLUMN ASSIGNMENTS FOR LEFT-HAND BLK IS A-E AND FOR RIGHT-HAND BLK IS F-B.
2. TERMINALS 33 THROUGH 48 ARE SPARES ON CONN BLKS 9 AND 10.
3. THIS KTU SHOULD BE USED FOR 4 CIRCUITS ONLY. THE 116A1 CIRCUIT MODULE SHOULD NOT BE ADDED TO THIS UNIT BECAUSE OF WIRING INCOMPATIBILITY IN THE 598-TYPE PANEL.

Fig. 56—Connections for 498A KTU (Music-On-Hold) in 598-Type Panel

SERVICE

1A2 KEY TELEPHONE SYSTEM

PANELS

601-, 602-, AND 603-TYPE

1. GENERAL

1.01 The 601A, 602A, and 603A (Fig. 1, 2, and 3) panels provide auxiliary mounting facilities for the 400 series key telephone units required to provide basic dial intercom, deluxe dial intercom, and intercom TOUCH-TONE® calling, respectively.

1.02 This section is reissued to:

- Cover complete redesign of factory wiring within the panels
- Add identification and installation information formerly contained in Section 518-215-118 which is hereby canceled.

Since this reissue covers a general revision, arrows ordinarily used to indicate changes have been omitted.

Caution: Issue 1 of this section and Issue 2 of Section 518-215-118 cannot be used for identification, installation, and connections of 601A, 602A, and 603A panels.

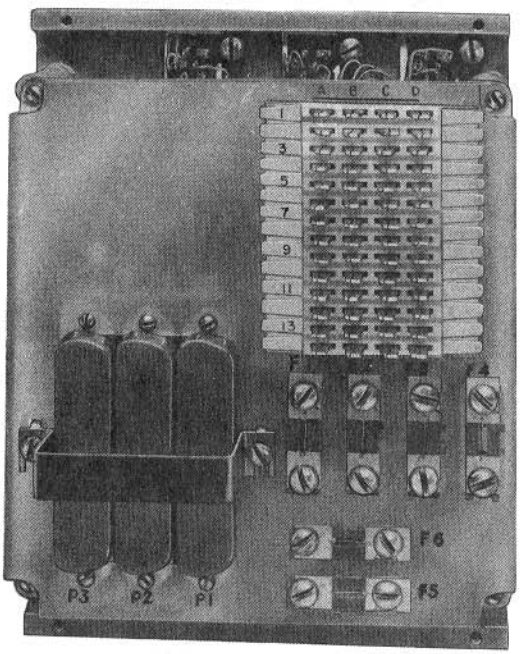

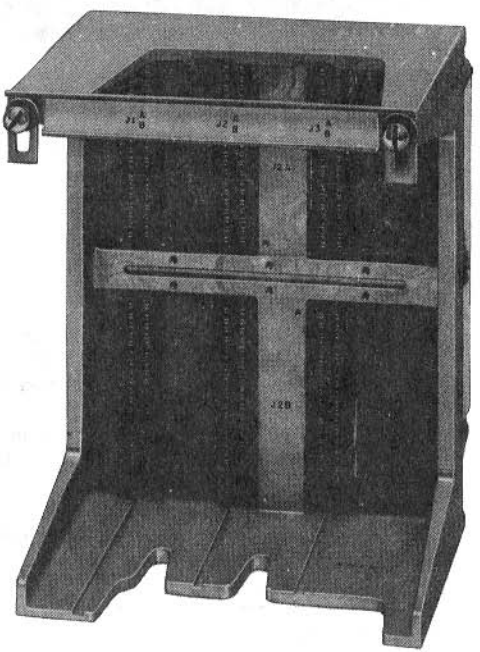

Fig. 1—601A Panel

© American Telephone and Telegraph Company, 1971
Printed in U.S.A.

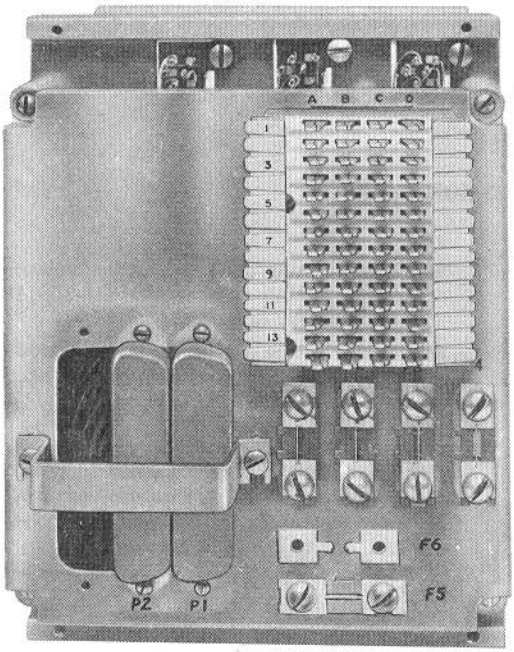

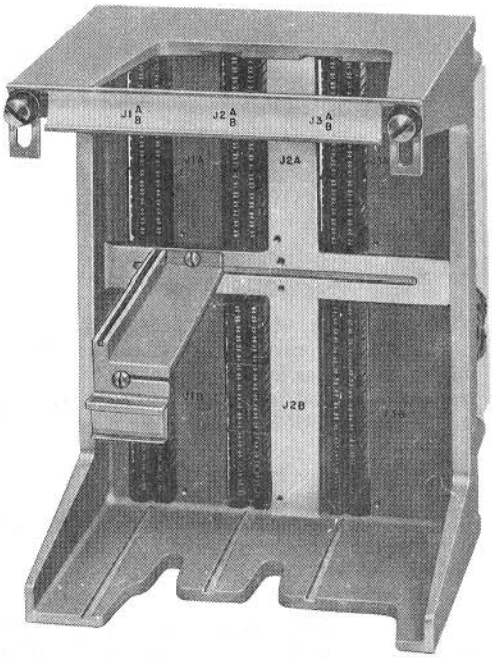

Fig. 2—602A Panel

1.03 This issue of the section is based on the following drawings:

- SD-69608-01, Issue 3—Station Systems, Key Telephone System No. 1A2, Dial Intercommunicating and Miscellaneous Panels
- SD-69567-01, Issue 8—Station Systems, Key Telephone System No. 1A2, Dial Selective Intercommunicating Line Circuit.

If this section is to be used with equipment or apparatus reflecting later issues of the drawings, reference should be made to the SDs to determine the extent of the changes and the manner in which the section may be affected.

1.04 ***Basic Dial Intercom:*** A station (on pickup) is connected to a common talking path which is part of the selector circuit. Station selection is

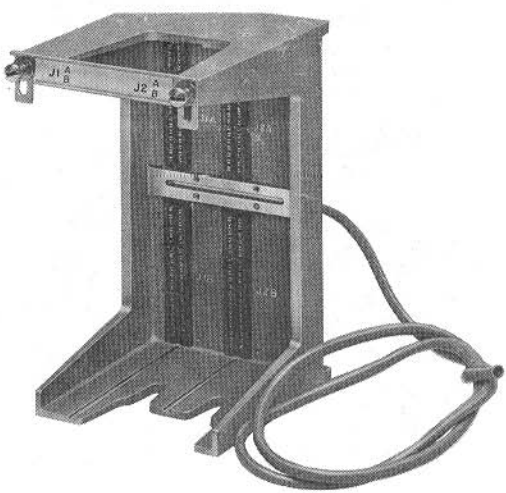

Fig. 3—603A Panel

then accomplished by dialing one digit (for 10-station selector) or two digits (for 19-station selector).

1.05 ***Deluxe Dial Intercom:*** Same as basic dial intercom plus flashing lamps on incoming calls, dial tone, station busy tone, audible ringback tone, and interrupted ringing.

2. IDENTIFICATION

PURPOSE

In 1A2 Key Telephone System arrangements to provide auxiliary mounting facilities for 584-type panels in large centralized installations.

ORDERING GUIDE

Panel, 601A

Panel, 602A

Panel, 603A

(a) ***Replaceable Components***

- Fuse, 24C (2A)*
- Fuse, 24E (1/2A)*
- Fuse, 24G (1-1/3A) †

* For 601 and 602A panels.

† For 602A panel only.

(b) ***Associated Apparatus (Order Separately)***

- Block, Connecting, 66B4-25 (as required)
- Cable, Connector, A25B, A50B, or A75A (as required)
- Mounting, Apparatus, 69B or 69D (as required, order per Table A)
- Unit, Telephone, Key (as required, order per Table A)
- 1A1 Matrix Block

DESIGN FEATURES

(a) Can be installed on a 23-inch relay rack by using a 99A (MD) or 99B bracket or in a 16-type apparatus mounting.

(b) Four No. 8-32 RHM mounting screws are furnished with each panel.

(c) A retainer is provided to lock the KTUs in the connectors.

601A Panel

(d) Arranged to mount three basic dial intercom circuits (Table A).

602 Panel

(e) Arranged to mount one deluxe dial intercom circuit (Table A).

601A and 602A Panels

(f) Factory wiring is provided from the connectors to the jacks. This permits use of connector cables for line and station terminations.

(g) Connecting block on panel for terminating power, option, and TOUCH-TONE leads.

(h) Fuse panel provided with 24-type fuses for power distribution (Table B).

(i) Dimensions are 6 inches wide by 8 inches high.

603A Panel

(j) Designed to mount 426A and 427B (Series 4) or C KTUs (Table A) to provide TOUCH-TONE calling in 601A and 602A panels.

(k) Equipped with a 5-foot cable stub for connecting to the 601A or 602A panel.

(l) Dimensions are 4-1/2 inches wide by 8 inches high.

TABLE A

KTU	DIAL INTERCOM FUNCTION	PANELS			APPARATUS MOUNTINGS *	
		601A	602A	603A	69B	69D
407B	10-Code Selector Circuit	●	●			
413A	Auxiliary Ringup Circuit				●	
420A	Long Line Circuit				●	
421A	Transfer Circuit (for DSS)					● †
422B	Station Busy Selector Circuit		●			
423A	Dial Tone, Busy Tone, and Audible Ringback Tone Circuit		●			
424A	19-Code Selector Circuit	●	●			
425B	Flashing Lamp Circuit		●			
426A & 427B (Series 4) or C	TOUCH—TONE Adapter Circuit			●		

* The 69-type apparatus mountings and associated KTUs provide optional features for the dial intercom systems. See Fig. 4 through 13 for additional information.

† If interrupted signal for intercom differs from that provided by existing panel interrupter, a separate 421A KTU and 69D apparatus mounting must be provided.

TABLE B

FUSE FUNCTIONS FOR 601A AND 602A PANELS

PANEL		FUSE SIZE	FUSE CODE	CONN SERVED	±10V	±18V	SS †	A BAT.	B BAT.
601A	F1	1/2A	24E	J1A&B			●		
	F2	2A	24C		●				
	F3	1/2A	24E	J2A&B			●		
	F4	2A	24C		●				
	F5	1/2A	24E	J3A&B			●		
	F6	2A	24C		●				
602A	F1	1-1/3A	24G	J3A&B*				●	
	F2	1-1/3A	24G	Serves all conn					●
	F3	1/2A	24E	J3A&B			●		
	F4	1/2A	24E	J1B		●			
	F5	2A	24C	J3A&B	●				

* Also serves 603A panel.
† May be ±10V, -24V, ±18V, or ±105V, depending on option provided.

3. INSTALLATION

3.01 For information on apparatus mountings and relay racks, refer to Section 463-140-100.

3.02 Fig. 4 through 13 show panel and connecting block layouts for 601A, 602A, and 603A panels.

3.03 When a 424A KTU (19-code circuit) is used in the 602A panel, an additional 422B KTU, 69D apparatus mounting, an A25B connector cable, and a 66B4-25 connecting block are required. (See Fig. 9 for layout.)

> ***Note:*** A separate 421A KTU must be provided in a 69D apparatus mounting if interrupted signal for intercom differs from that provided by existing panel interrupter (see Fig. 8 and 9 for layout)

3.04 Panel and connecting block layouts are shown for optional features such as preset conference, DSS, and long line circuits. These configurations require additional 66-type connecting blocks, connector cables, 69-type apparatus mountings, and KTUs. (See Fig. 6, 7, 10, 11, and 12, whichever apply, for layouts of these options.)

3.05 Install panels on relay rack or 16-type apparatus mountings in the usual manner. A 99A (MD) or 99B bracket must be used when installing the panels on a relay rack.

3.06 Install 69-type apparatus mountings (if required).

3.07 Install 66B4-25 connecting blocks and stencil each block as required (Fig. 4 through 12).

601A and 602A Panels

3.08 Install A25B connector cables from panels to connecting blocks.

> ***Note:*** A75A and A50B connector cables can also be used to connect 601A and 602A panels, respectively, to the connecting blocks. When using the A75A connector cable, the conductors in the BL-W, O-W, and G-W binders are terminated on connecting blocks 1, 2, and 3, respectively. When using the A50B connector cable, terminate the conductors in the BL-W and O-W binder on connecting blocks 1 and 2, respectively.

3.09 After all other panel connections have been made, use 20-gauge strapping wire to terminate power leads to connecting block on the panel. Strip ends of wire and be careful to avoid shorting adjacent terminals; then, connect power leads to the power supply provided for the 584-type panels.

3.10 Install key telephone units.

3.11 Make certain fuses are properly installed and not blown after power leads have been terminated.

603A Panel

3.12 Terminate free end of cable stub on connecting block located on 601A (Fig. 15) or 602A (Fig. 23) panel. Do not cut cable stub.

3.13 Install key telephone units.

4. CONNECTIONS

4.01 Fig. 14 and 22 show the connections of A25B connector cables to 66B4-25 connecting blocks for 601A and 602A panels, respectively.

4.02 The method of terminating leads on the 66B4-25 connecting block is shown below:

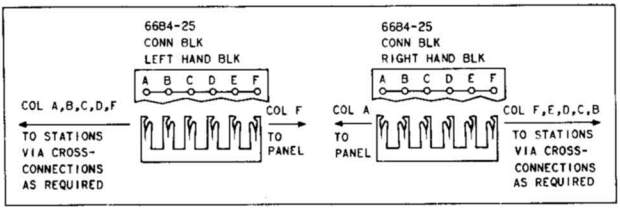

4.03 TOUCH-TONE (603A panel), power, interrupter and option connections for the 601A, and 602A panels are shown in Fig. 15 and 23, respectively. These connections should be made on the 66T1 connecting block located on the panel before installing KTUs.

4.04 Fig. 14 through 31 cover station connections, option connections, basic dial intercom, deluxe dial intercom, and 603A panel connections.



Do not cut cable tail on 603A panel. Store excess length by dressing in place.

CONNECTION INDEX

601A Panel (Basic Dial Intercom)

Fig. 14—A25B Connector Cables to 66B4-25 Connecting Blocks

Fig. 15—Power Leads, Option Strapping, and TOUCH-TONE Connections

Fig. 16—424A KTU—Transfer Digit Lead Connections

Fig. 17—407B KTU—Station Connections

Fig. 18—424A KTU—Station Connections

Fig. 19—420A KTU, Long Line Circuit Mounted in 69B Apparatus Mounting

Fig. 20—421A KTU Arranged for DSS Mounted in 69B Apparatus Mounting

Fig. 21—1A1 Matrix Block, Optional Dial Selected Preset Conference

602A Panel (Deluxe Dial Intercom)

Fig. 22—A25B Connector Cables to 66B4-25 Connecting Blocks

Fig. 23—Power and Interrupter Leads, Option Strapping, and TOUCH-TONE Connections

Fig. 24—424A KTU—Transfer Digit Lead Connections

Fig. 25—422B KTU—X1-X0, Station Busy Selector Circuit for Adding Tens Group and Optional 421A KTU to Provide Interrupted Signaling

Fig. 26—407B KTU, Station Connections

Fig. 27—424A KTU, Station Connections

Fig. 28—420A KTU, Long Line Circuit—Mounted in 69B Apparatus Mounting

Fig. 29—421A KTU Arranged for DSS Mounted in 69D Apparatus Mounting

Fig. 30—421A and 413A KTUs, Preset Conference Circuit Mounted in 69D Apparatus Mounting, and 1A1 Matrix Block

Fig. 31—421A KTU, Preset Conference Circuit Mounted in 69D Apparatus Mounting

5. REFERENCES

5.01 For additional information, refer to the following:

- Section 518-010-101 Centralized Key Telephone Installations
- Section 518-215-400 Service, 1A2 KTS Key Telephone Units, 400 Series.
- Section 518-215-410, Service, 1A2 KTS, Panels, 583-and 584-Type
- Section 461-620-100, Matrix Block-1A1, Identification, Installation, Wiring and Maintenance

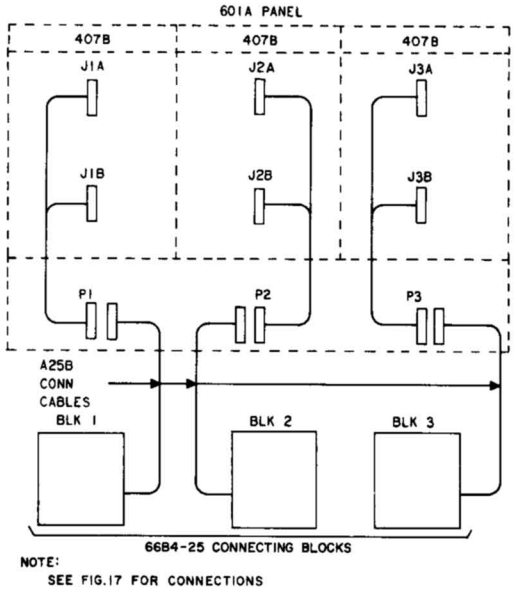

Fig. 4—601A Panel and Connecting Block Layout with Three 407B KTUs

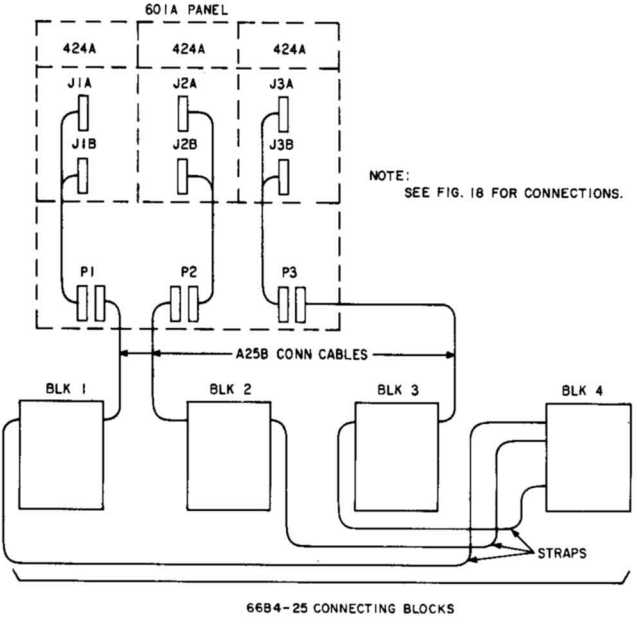

Fig. 5—601A Panel and Connecting Block Layout with Three 424A KTUs

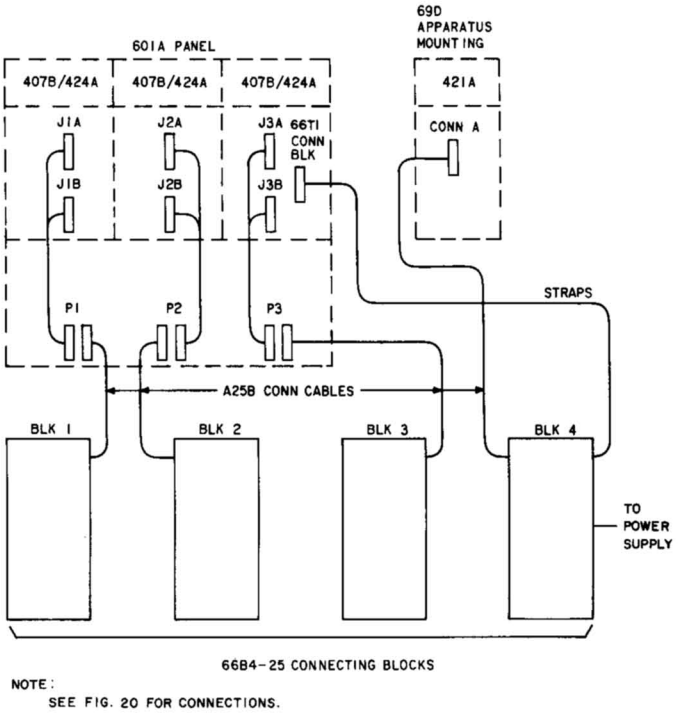

Fig. 6—601A Panel and Connecting Block Layout with Optional DSS Circuit

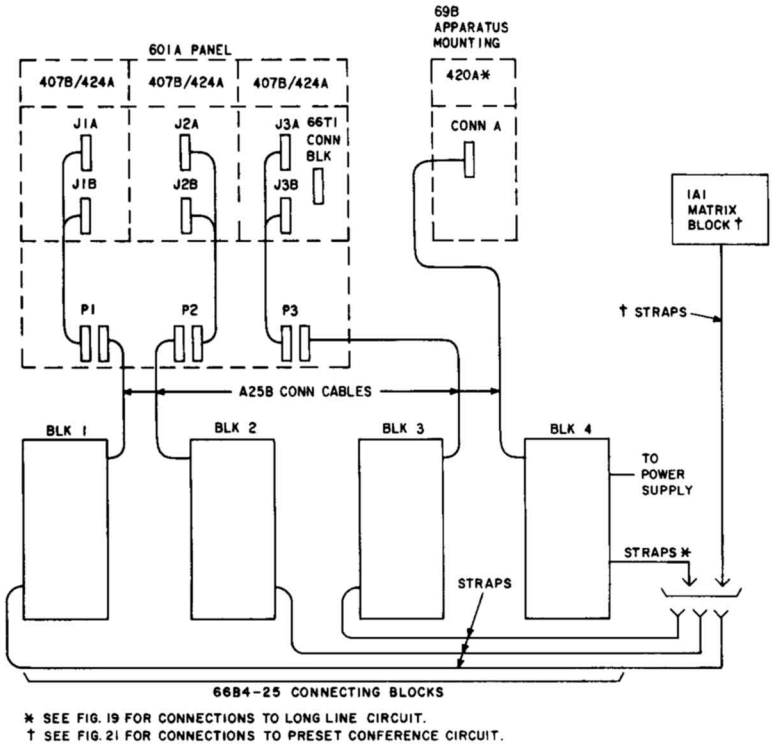

Fig. 7—601A Panel and Connecting Block Layout with Optional Long Line Circuit or Preset Conference Circuit

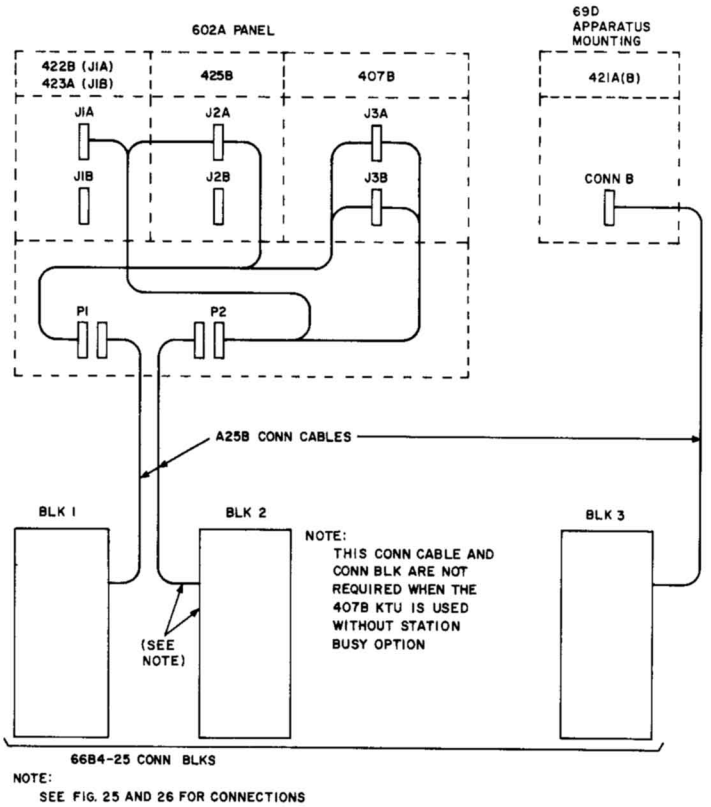

Fig. 8—602A Panel and Connecting Block Layout with 407B KTU (10-Code Circuit)

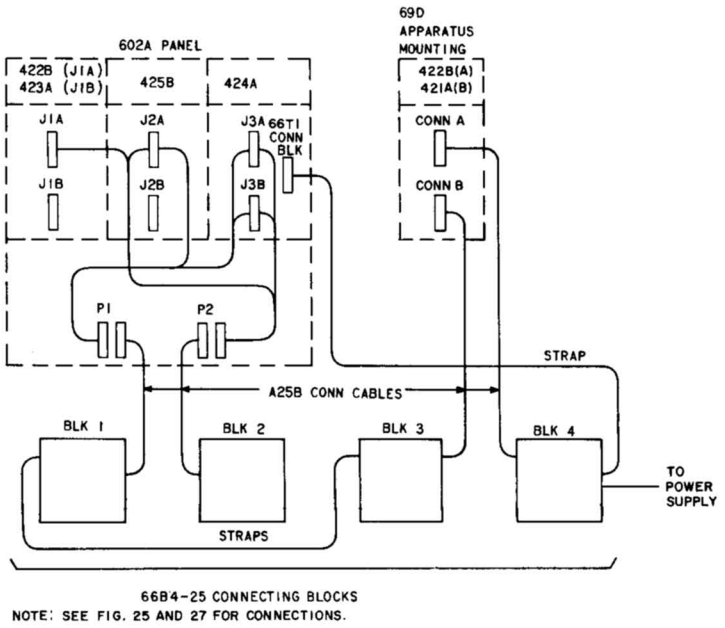

Fig. 9—602A Panel and Connecting Block Layout with 424A KTU (19-Code Circuit)

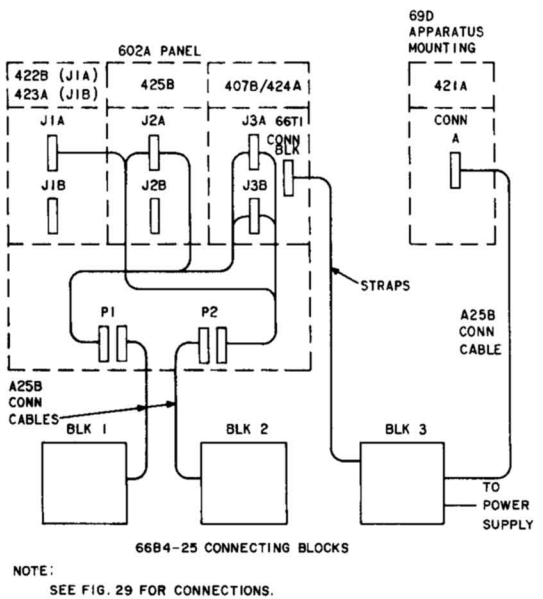

Fig. 10—602A Panel and Connecting Block Layout with Optional DSS Circuit

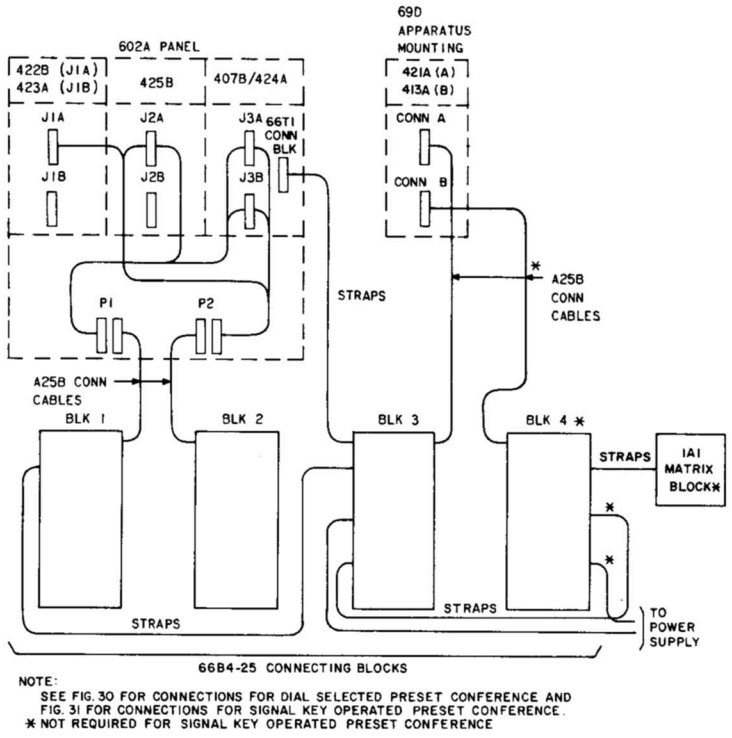

Fig. 11—602A Panel and Connecting Block Layout with Optional Preset Conference Circuit

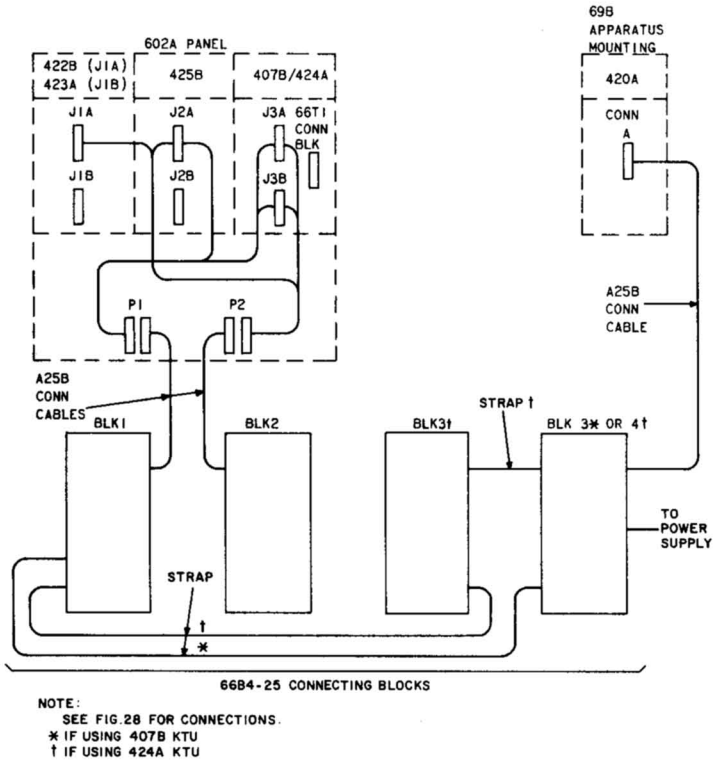

Fig. 12—602A Panel and Connecting Block Layout with Optional Long Line Circuit

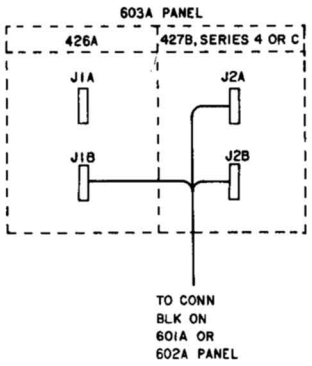

Fig. 13—603A Panel Layout

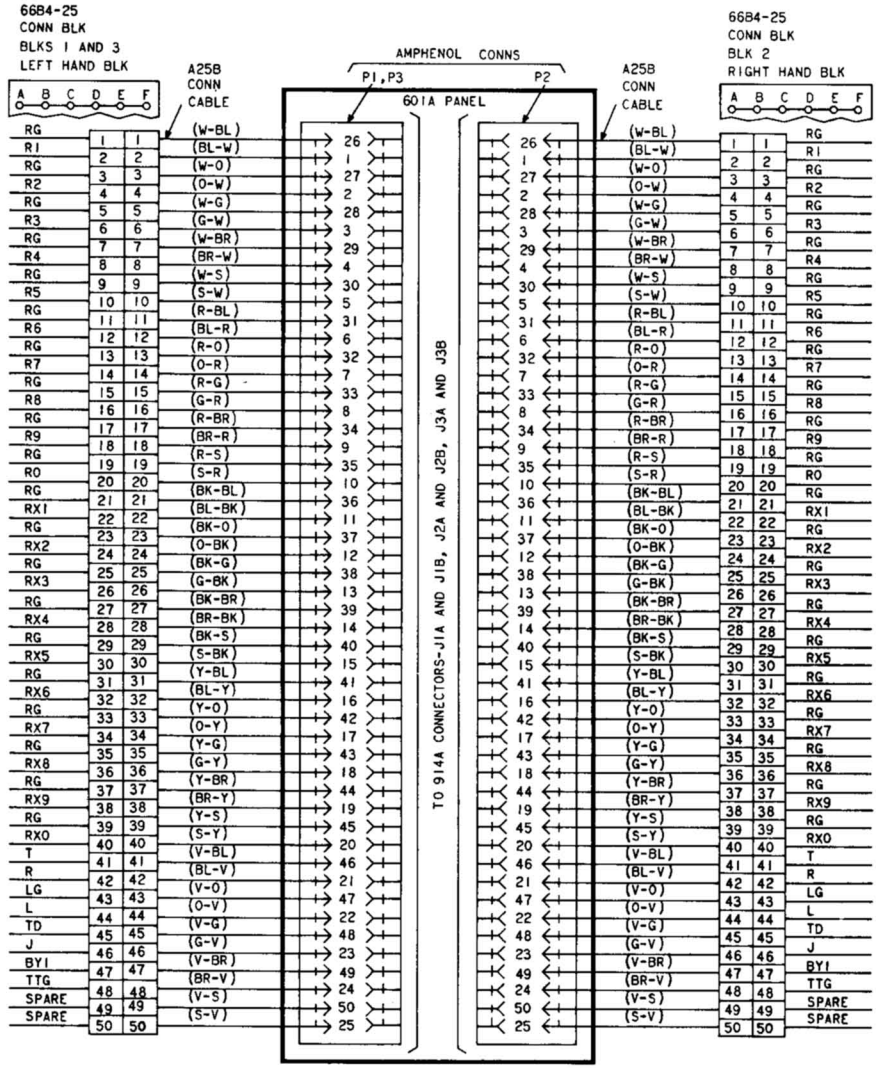

Fig. 14—601A Panel, Connection of A25B Connector Cables to 66B4-25 Connecting Blocks

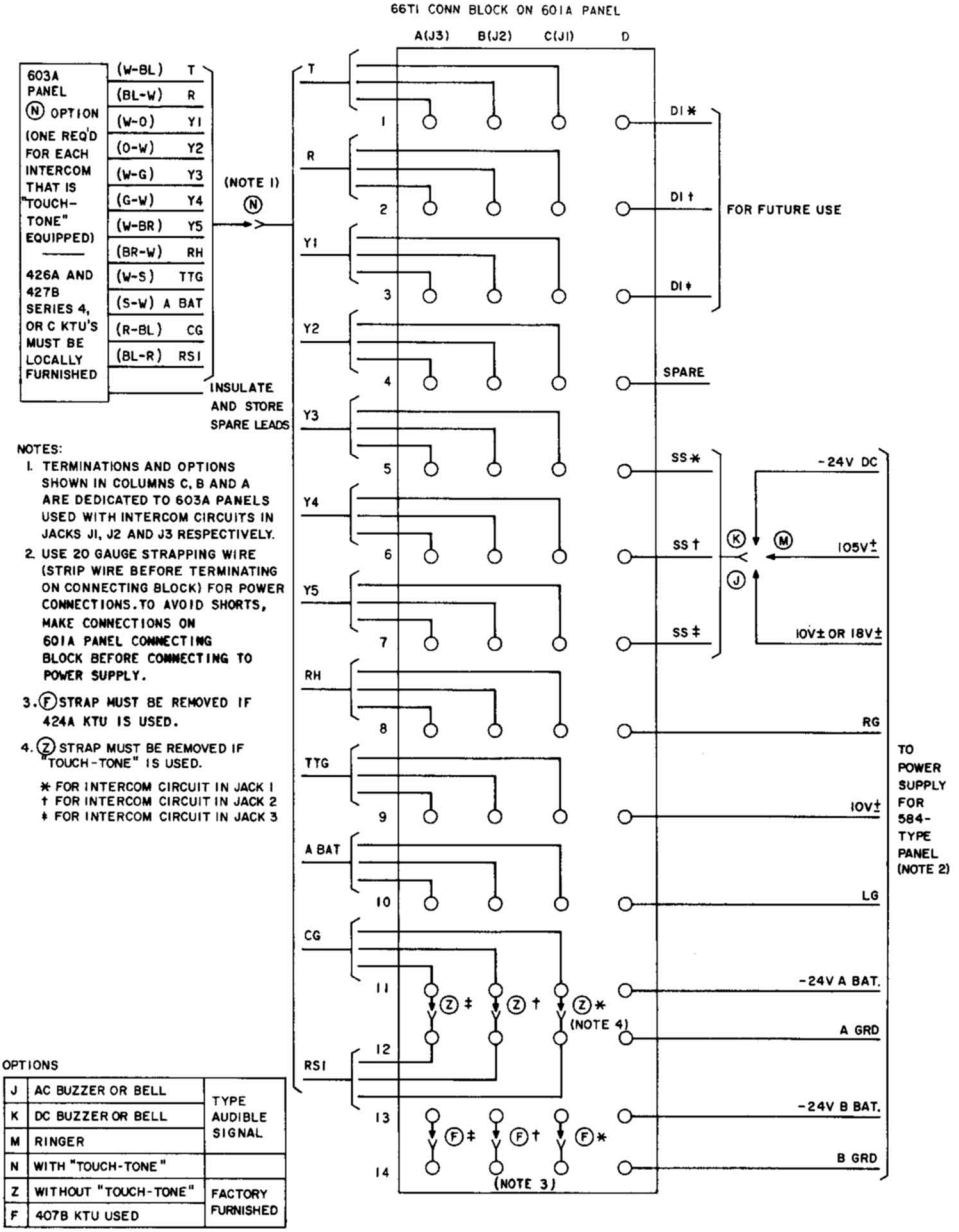

Fig. 15—601A Panel, Connections of Power Leads, Option Strapping, and TOUCH-TONE

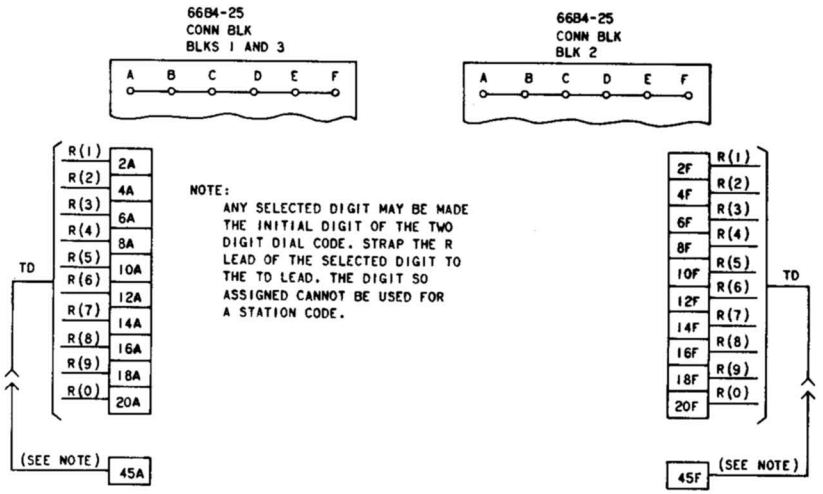

Fig. 16—601A Panel, 424A KTU Connection of Transfer Digit Lead

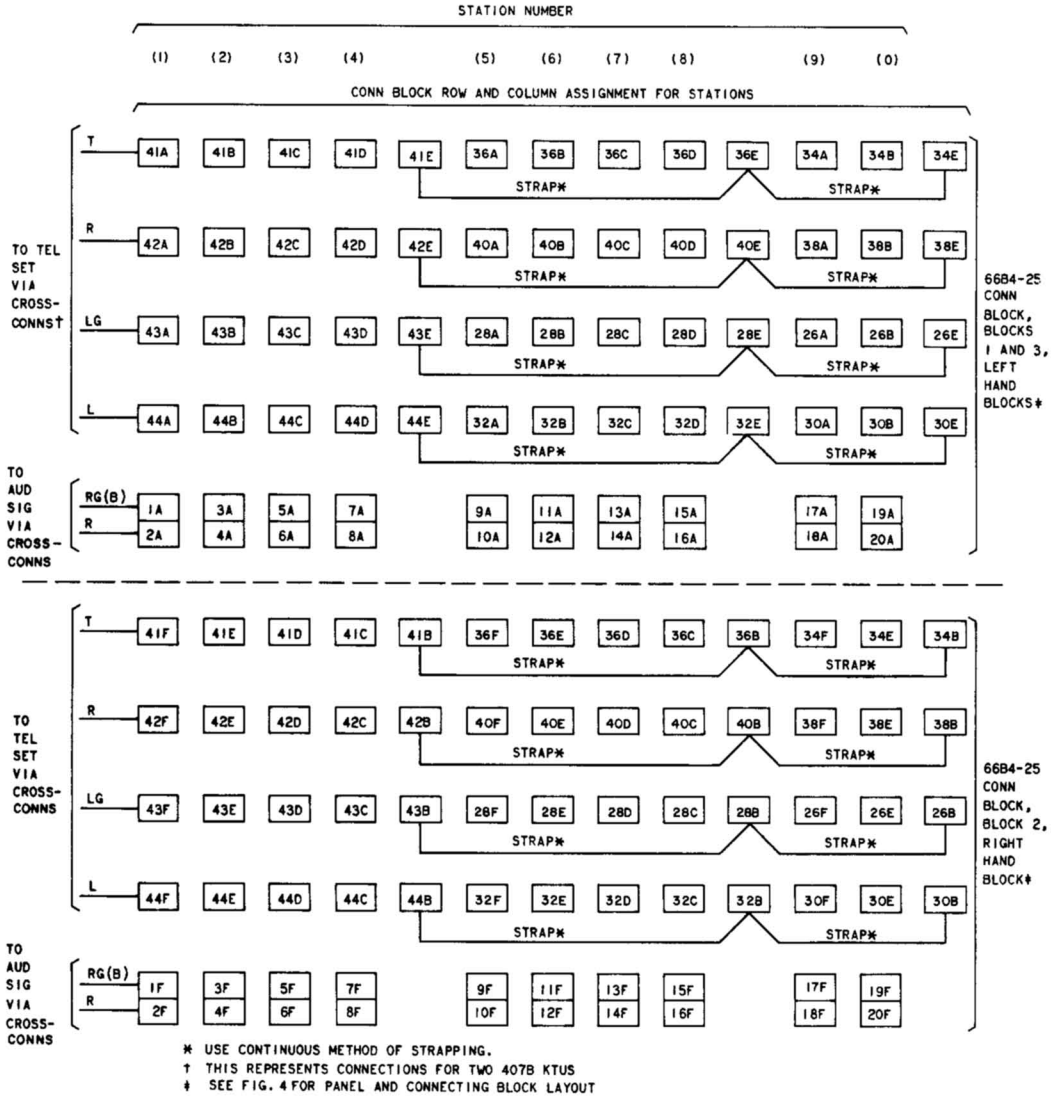

* USE CONTINUOUS METHOD OF STRAPPING.
† THIS REPRESENTS CONNECTIONS FOR TWO 407B KTUS
‡ SEE FIG. 4 FOR PANEL AND CONNECTING BLOCK LAYOUT

Fig. 17—601A Panel, 407B KTU, Station Connections via Cross-Connections for Basic Dial Intercom

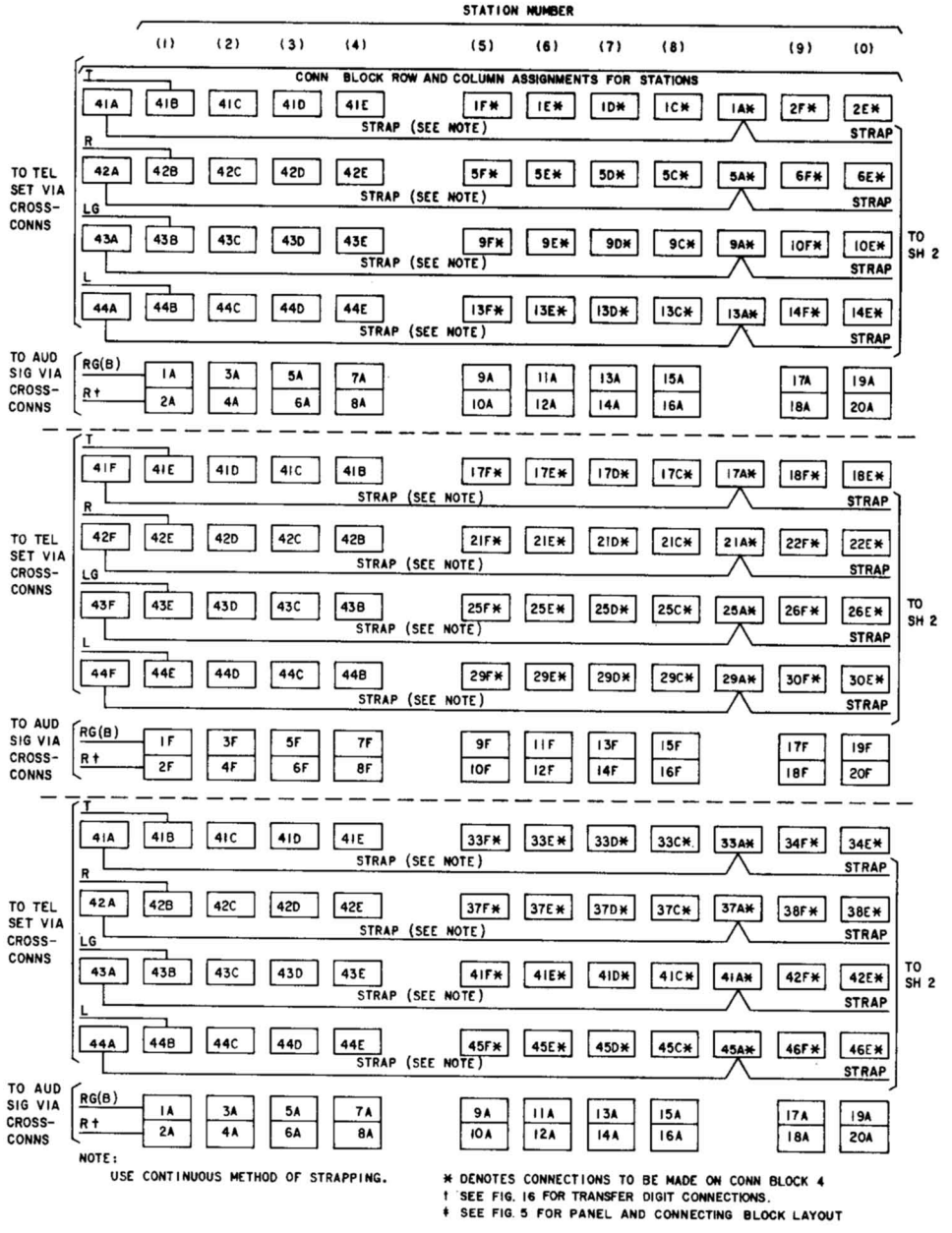

Fig. 18—601A Panel, 424A KTU, Station Connections via Cross-Connections for Basic Dial Intercom (Sheet 1)

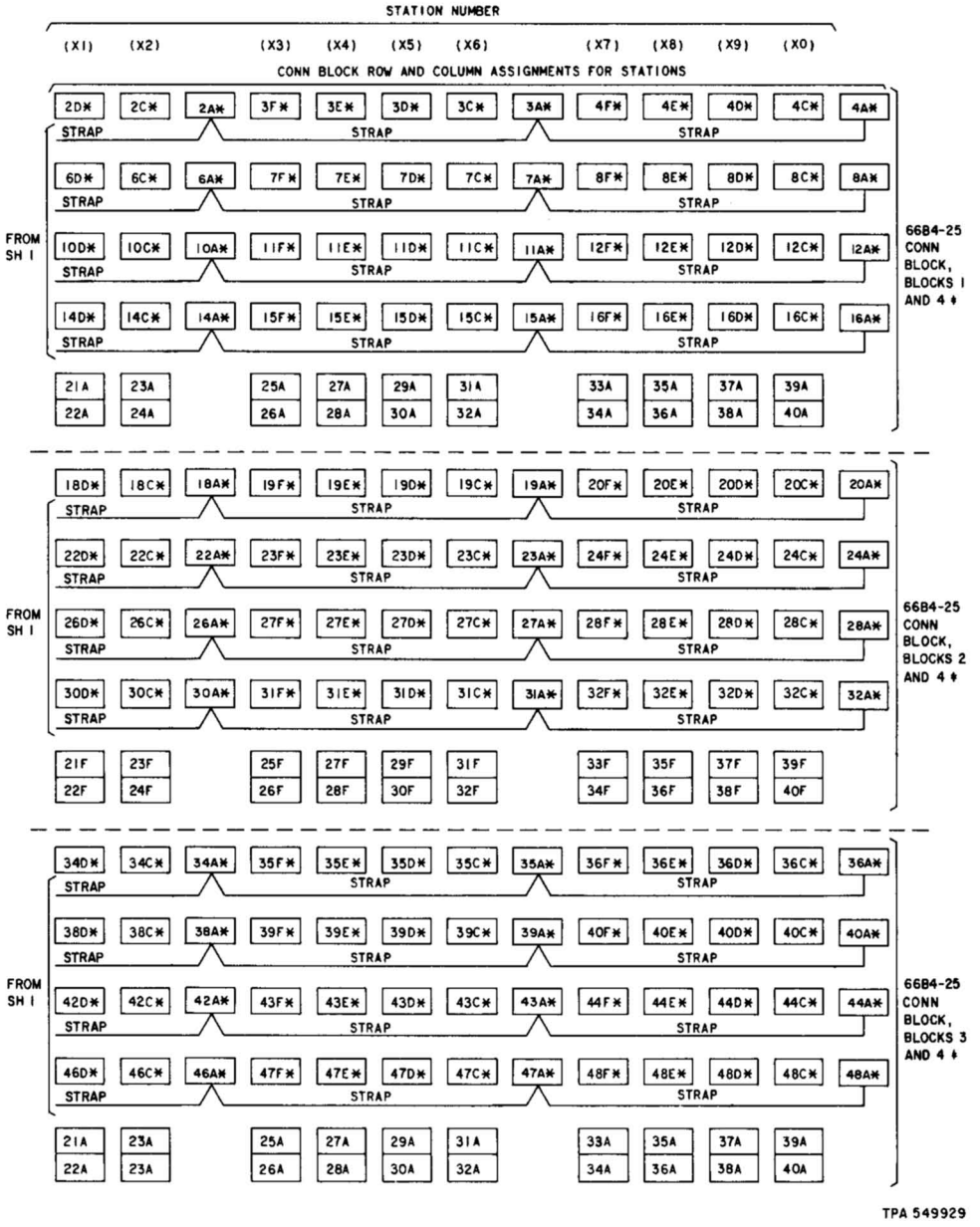

Fig. 18—601A Panel, 424A KTU, Station Connections via Cross-Connections for Basic Dial Intercom (Sheet 2)

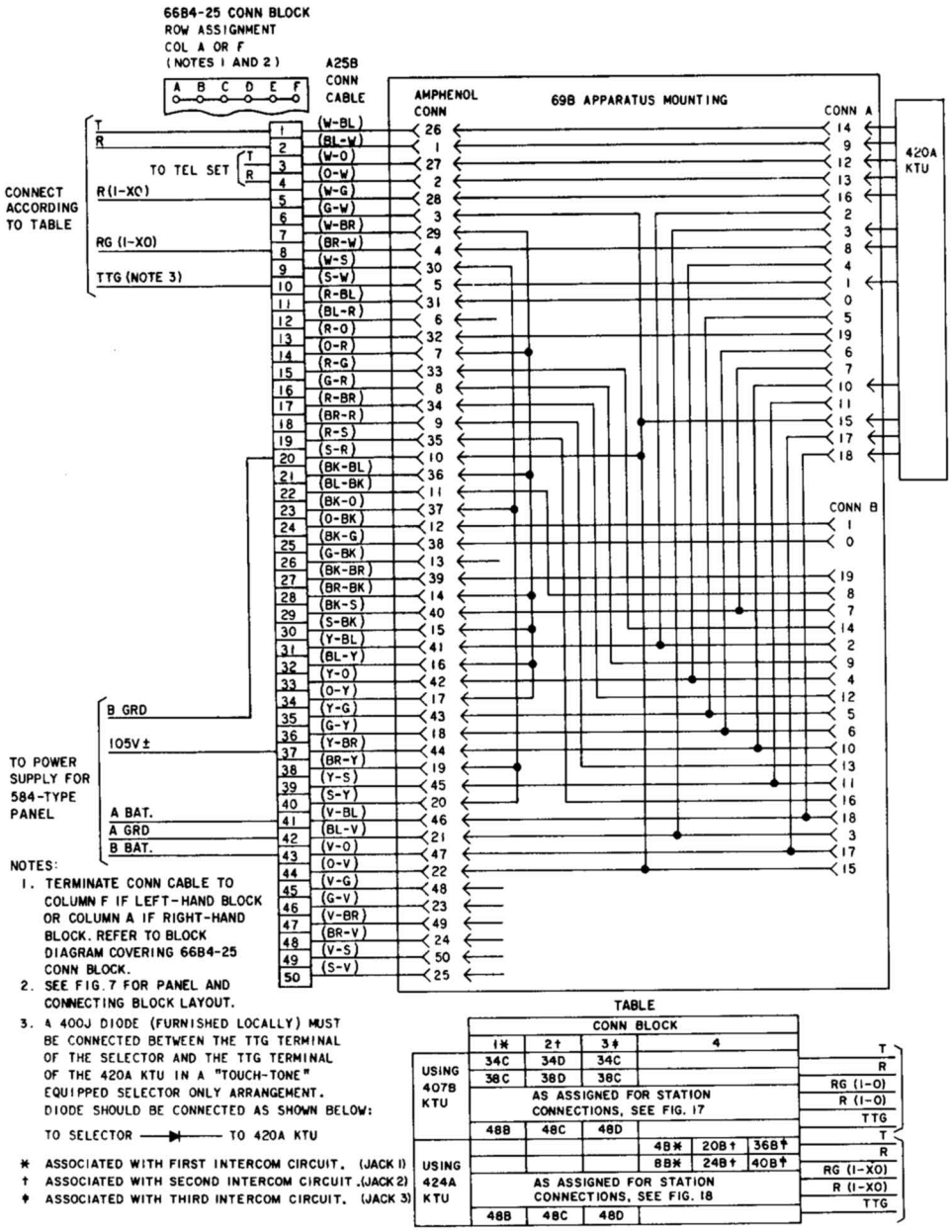

Fig. 19—601A Panel, 420A KTU, Long Line Circuit, Basic Dial Intercom, Connections to Optional KTU Mounted in 69B Apparatus Mounting

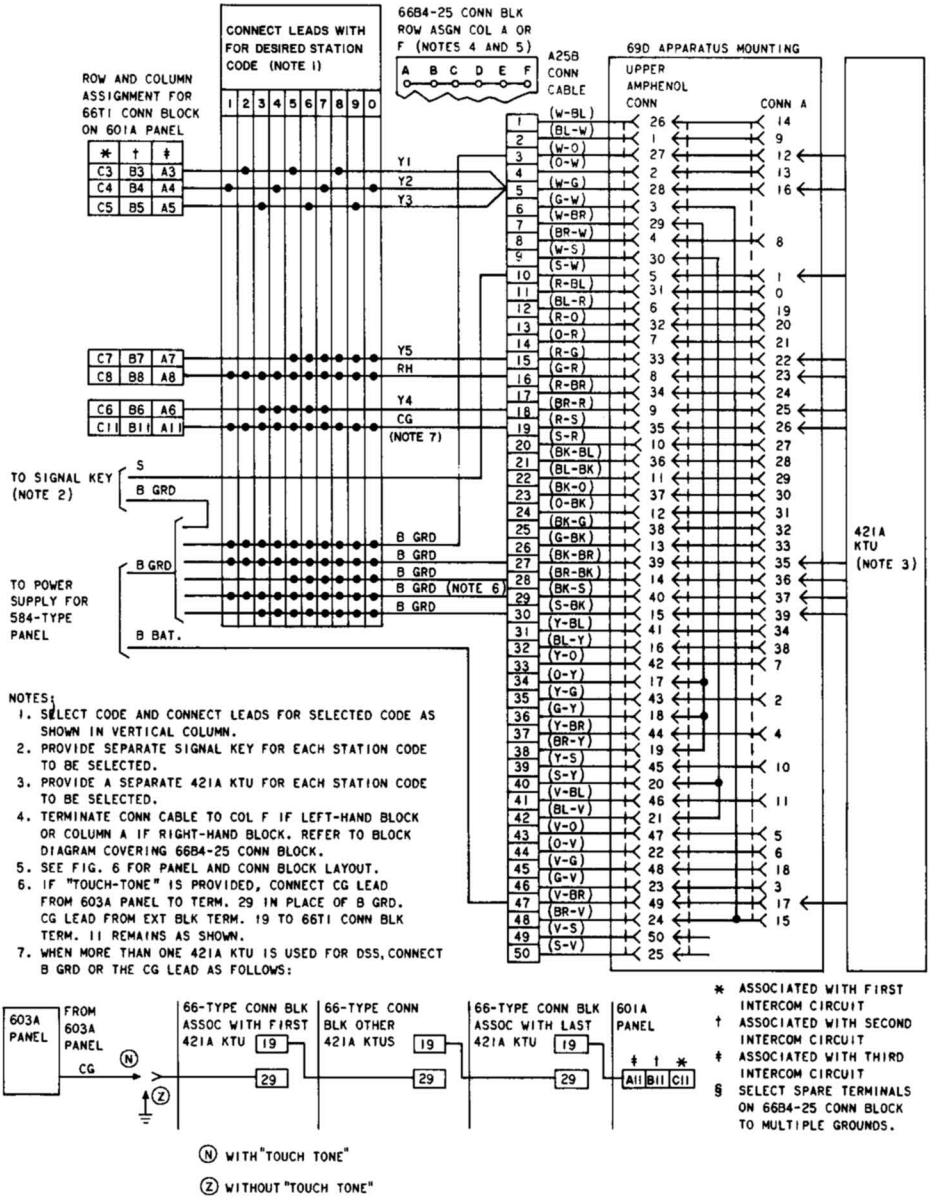

Fig. 20—601A Panel, 421A KTU, Arranged for DSS, Basic Dial Intercom, Connections to Optional KTU Mounted in 69D Apparatus Mounting

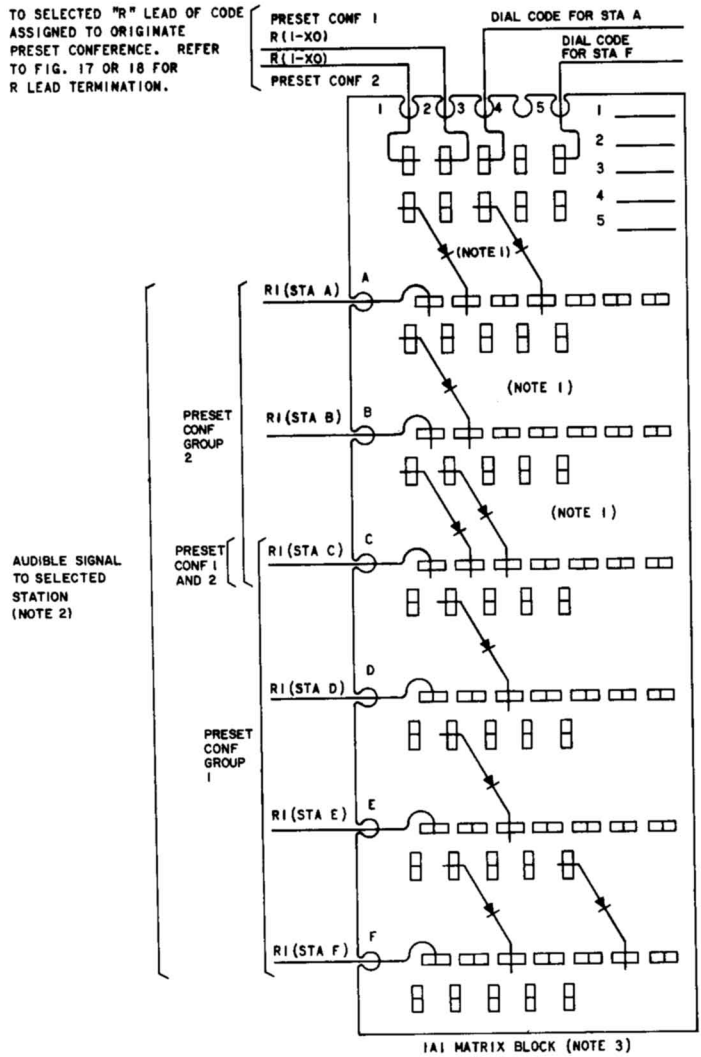

NOTES:
1. USE 446F DIODE (PROCURE LOCALLY)
2. WHEN RINGERS ARE USED AS AUDIBLE SIGNALS, REMOVE RINGER CAPACITORS FROM CIRCUITS.

Fig. 21—601A Panel, Basic Dial Intercom, Connections to Optional Dial Selected Preset Conference Circuit Using 1A1 Matrix Block

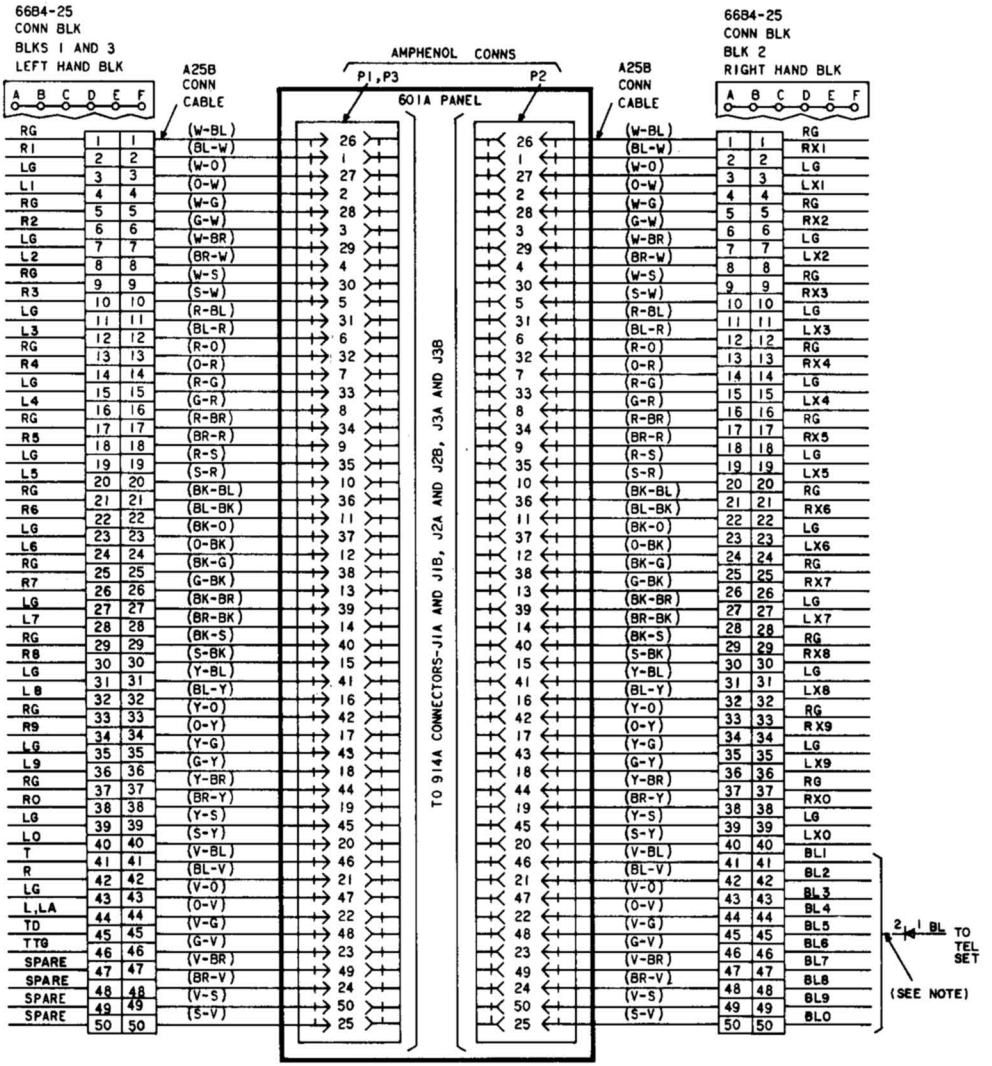

NOTE:
WHEN BL LEAD IS USED TO PROVIDE BUSY TONE, CONNECT 400J DIODE IN EACH BL LEAD AS REQUIRED. POLE LOCALLY PROCURED DIODE AS SHOWN.

Fig. 22—602A Panel, Connection of A25B Connector Cables to 66B4-25 Connecting Blocks

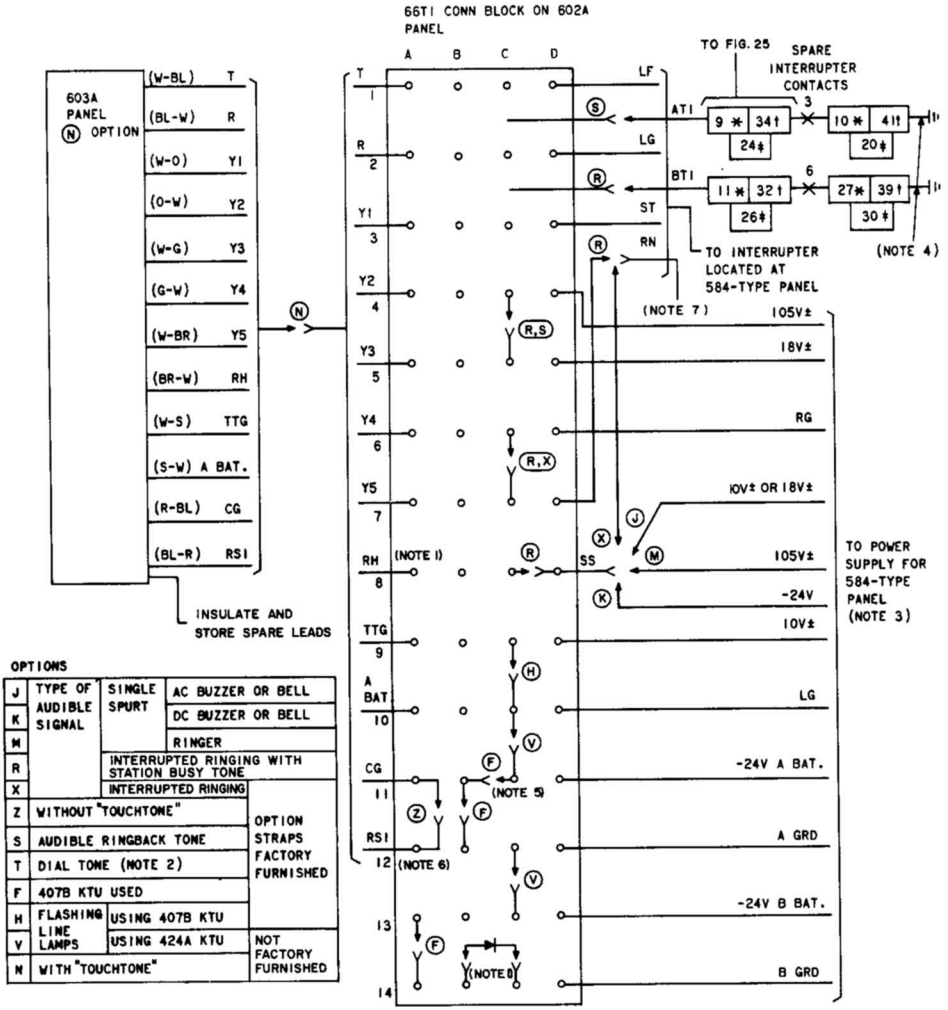

OPTIONS

J	TYPE OF AUDIBLE SIGNAL	SINGLE SPURT	AC BUZZER OR BELL
K			DC BUZZER OR BELL
M			RINGER
R		INTERRUPTED RINGING WITH STATION BUSY TONE	
X		INTERRUPTED RINGING	
Z	WITHOUT "TOUCHTONE"		OPTION STRAPS FACTORY FURNISHED
S	AUDIBLE RINGBACK TONE		
T	DIAL TONE (NOTE 2)		
F	407B KTU USED		
H	FLASHING LINE LAMPS	USING 407B KTU	
V		USING 424A KTU	NOT FACTORY FURNISHED
N	WITH "TOUCHTONE"		

NOTES:
1. IF (T) AND (N) OPTIONS ARE PROVIDED, A 400J DIODE (PROCURED LOCALLY) MUST BE PLACED BETWEEN TERMINALS B14,C14 AND RH LEAD MOVED FROM TERM. A8 TO TERM. B8.
2. DIAL TONE PROVIDED BY PLUGGING IN 423A KTU.
3. USE 20 GAUGE STRAPPING WIRE (STRIP WIRE BEFORE TERMINATING ON CONNECTING BLOCK) FOR POWER CONNECTIONS TO AVOID SHORTS. MAKE CONNECTIONS ON 602A PANEL CONNECTING BLOCK BEFORE CONNECTING TO THE POWER SUPPLY.
4. CONNECT TO B GRD AS SHOWN.
5. REMOVE (F) OPTION IF 424A KTU IS USED.
6. REMOVE (Z) OPTION IF "TOUCH-TONE" IS USED.
7. CONNECT RN LEAD TO PANEL IF INTERRUPTED SIGNAL FOR INTERCOM IS THE SAME AS PROVIDED BY 584-TYPE PANEL INTERRUPTER. IF DIFFERENT INTERRUPTED SIGNAL IS REQUIRED FOR INTERCOM, CONNECT TO FIG. 25.

* TERMINALS ON 584B (MD) PANEL
† TERMINALS ON 584C (MD) PANEL
‡ TERMINALS ON 584D PANEL.

Fig. 23—602A Panel, Connection of Power and Interrupter Leads, Option Strapping, and TOUCH-TONE

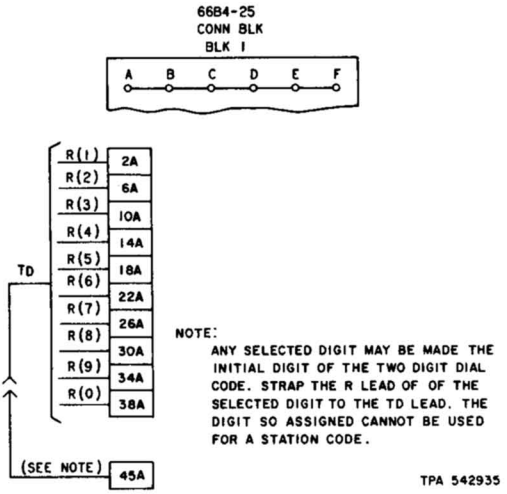

Fig. 24—602A Panel, 424A KTU Connection of Transfer Digit Lead

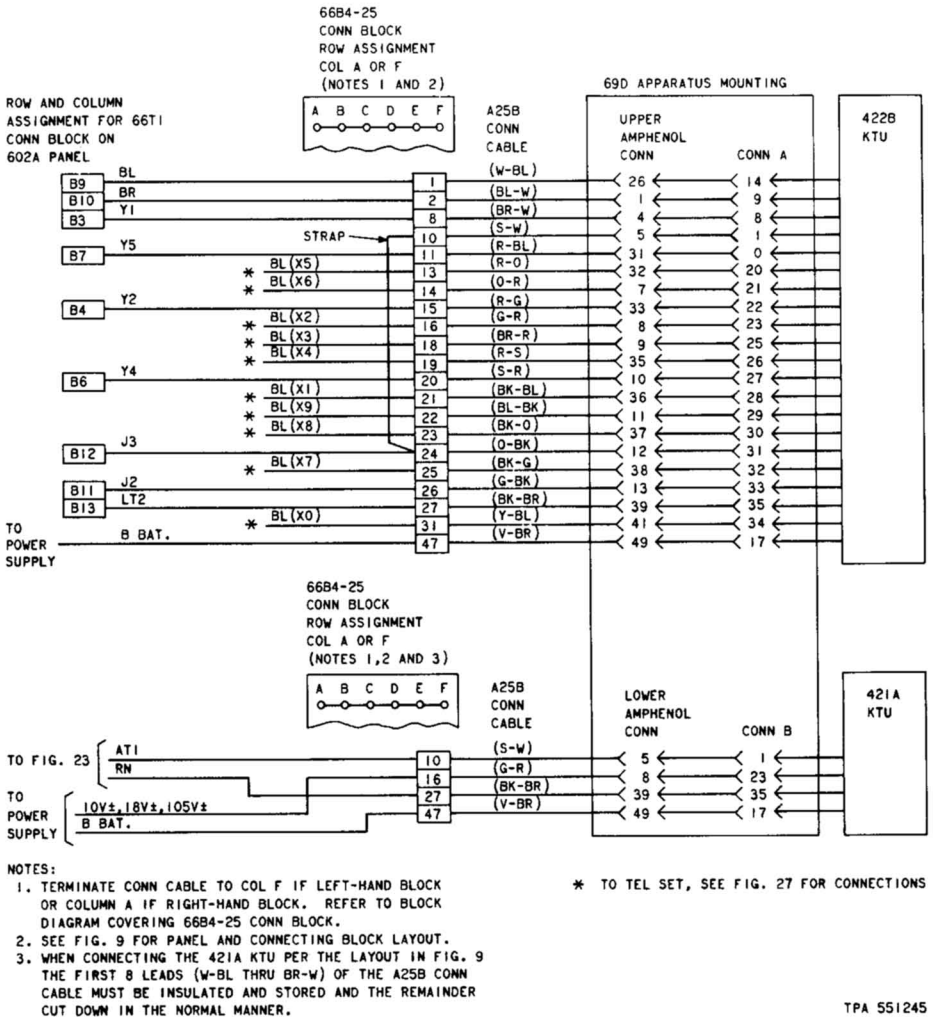

NOTES:

1. TERMINATE CONN CABLE TO COL F IF LEFT-HAND BLOCK OR COLUMN A IF RIGHT-HAND BLOCK. REFER TO BLOCK DIAGRAM COVERING 6684-25 CONN BLOCK.
2. SEE FIG. 9 FOR PANEL AND CONNECTING BLOCK LAYOUT.
3. WHEN CONNECTING THE 421A KTU PER THE LAYOUT IN FIG. 9 THE FIRST 8 LEADS (W-BL THRU BR-W) OF THE A25B CONN CABLE MUST BE INSULATED AND STORED AND THE REMAINDER CUT DOWN IN THE NORMAL MANNER.

* TO TEL SET, SEE FIG. 27 FOR CONNECTIONS

TPA 551245

Fig. 25—602A Panel, 422B KTU, X1-X0 Station Busy Selector Circuit Connections for Adding Tens Group and Optional 421A KTU to Provide Interrupted Signaling

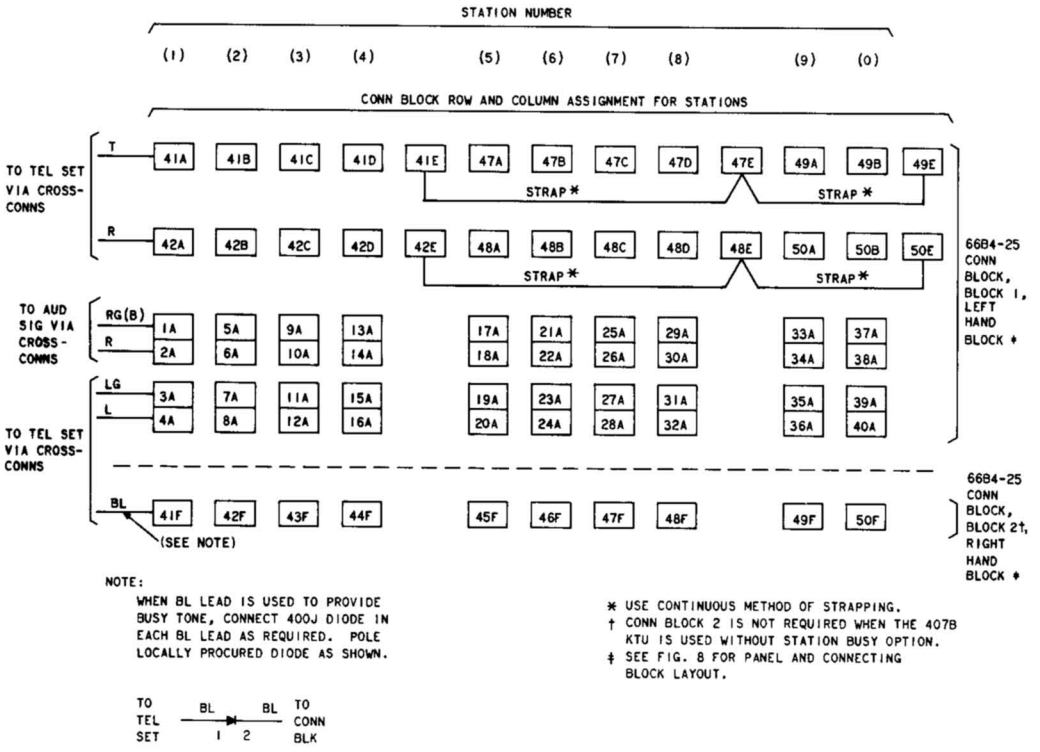

Fig. 26—602A Panel, 407B KTU, Station Connections via Cross-Connections for Deluxe Dial Intercom

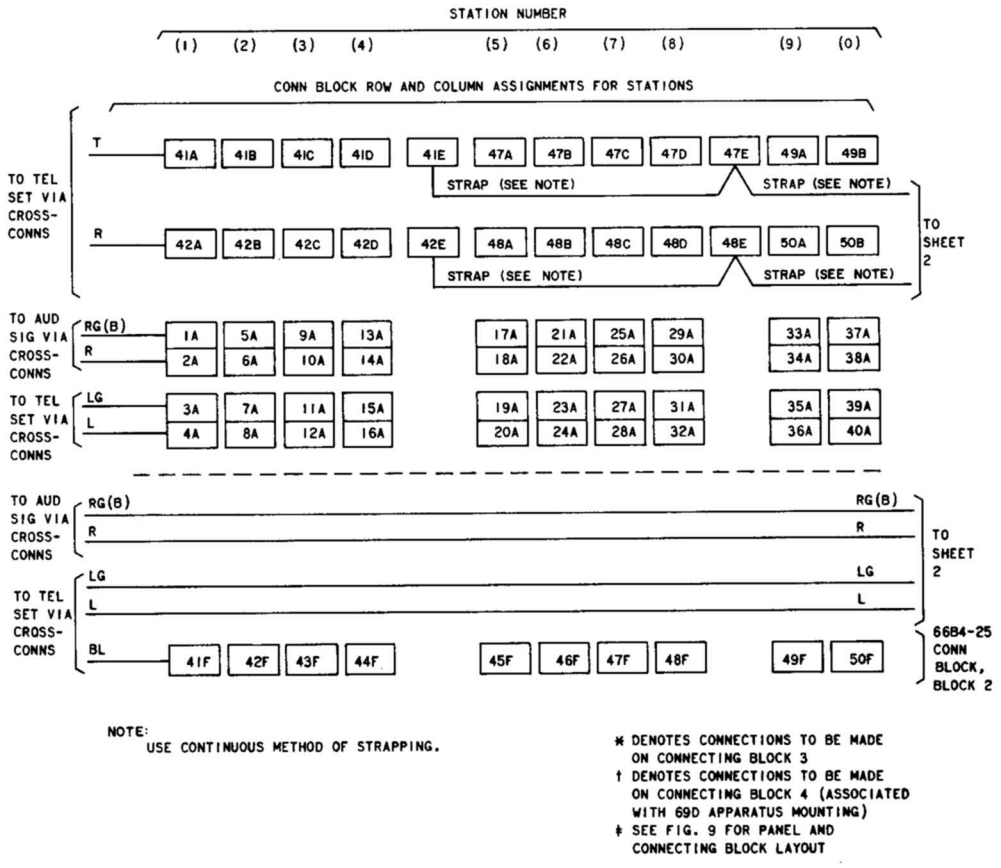

NOTE:
USE CONTINUOUS METHOD OF STRAPPING.

* DENOTES CONNECTIONS TO BE MADE ON CONNECTING BLOCK 3
† DENOTES CONNECTIONS TO BE MADE ON CONNECTING BLOCK 4 (ASSOCIATED WITH 69D APPARATUS MOUNTING)
‡ SEE FIG. 9 FOR PANEL AND CONNECTING BLOCK LAYOUT

Fig. 27—602A Panel, 424A KTU, Station Connections via Cross-Connections for Deluxe Dial Intercom (Sheet 1)

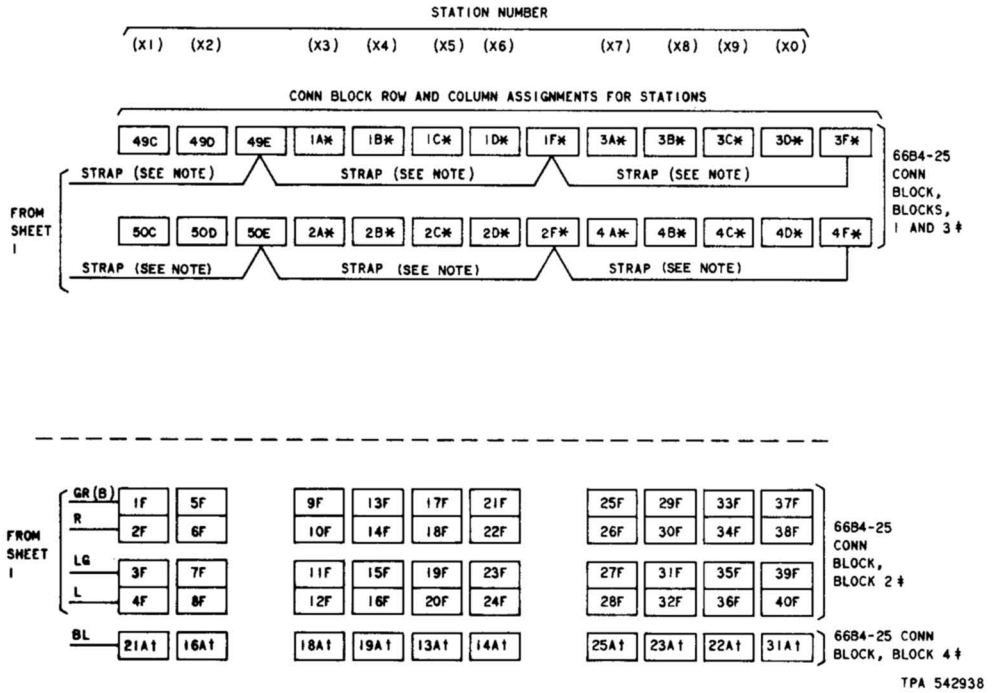

Fig. 27—602A Panel, 424A KTU Station Connections via Cross-Connections for Deluxe Dial Intercom (Sheet 2)

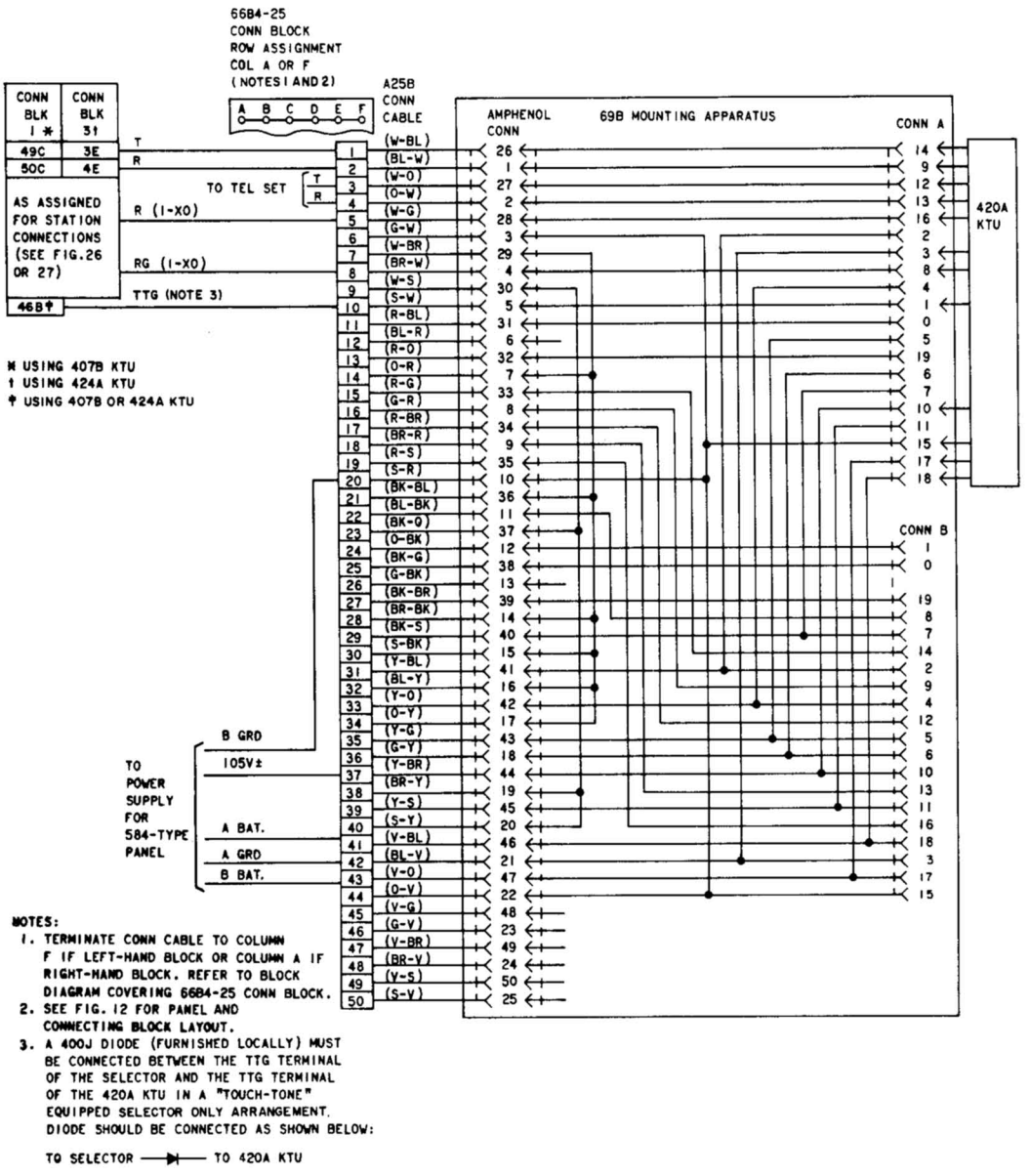

NOTES:

1. TERMINATE CONN CABLE TO COLUMN F IF LEFT-HAND BLOCK OR COLUMN A IF RIGHT-HAND BLOCK. REFER TO BLOCK DIAGRAM COVERING 66B4-25 CONN BLOCK.
2. SEE FIG. 12 FOR PANEL AND CONNECTING BLOCK LAYOUT.
3. A 400J DIODE (FURNISHED LOCALLY) MUST BE CONNECTED BETWEEN THE TTG TERMINAL OF THE SELECTOR AND THE TTG TERMINAL OF THE 420A KTU IN A "TOUCH-TONE" EQUIPPED SELECTOR ONLY ARRANGEMENT. DIODE SHOULD BE CONNECTED AS SHOWN BELOW:

TO SELECTOR —▶|— TO 420A KTU

Fig. 28—602A Panel, 420A KTU, Long Line Circuit, Deluxe Dial Intercom, Connections to Optional KTU in 69B Apparatus Mounting

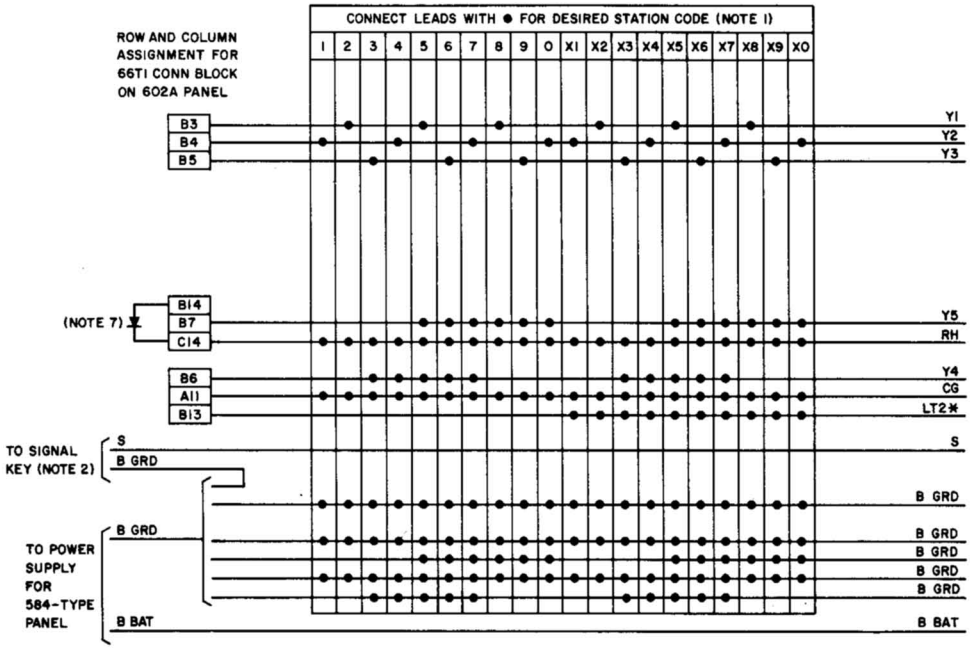

NOTES:

1. SELECT CODE AND CONNECT LEADS FOR SELECTED CODE AS SHOWN IN VERTICAL COLUMN.
2. PROVIDE SEPARATE SIGNAL KEY FOR EACH STATION CODE TO BE SELECTED.
3. PROVIDE SEPARATE 421A KTU FOR EACH STATION CODE TO BE SELECTED.
4. SEE FIG. 10 FOR PANEL AND CONNECTING BLOCK LAYOUT
5. WHEN MORE THAN ONE 421A KTU IS USED FOR DSS CONNECT B GROUND OR THE CG LEAD FROM 603A PANEL AS FOLLOWS:

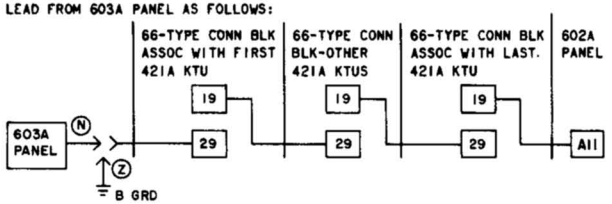

Ⓝ - WITH "TOUCH-TONE"

Ⓩ - WITHOUT "TOUCH-TONE"

6. A 400J DIODE (PROCURE LOCALLY) MUST BE CONNECTED AS SHOWN IN A DIAL-TONE EQUIPPED SELECTOR-ONLY ARRANGEMENT ON 66T1 CONNECTING BLOCK. MOVE RH LEAD FROM TERMINAL A8 TO TERMINAL B8. (SEE NOTE 1, FIG. 23.)

Fig. 29—602A Panel, 421A KTU, Arranged for DSS, Deluxe Dial Intercom, Connections to Optional KTU Mounted in 69D Apparatus Mounting (Sheet 1)

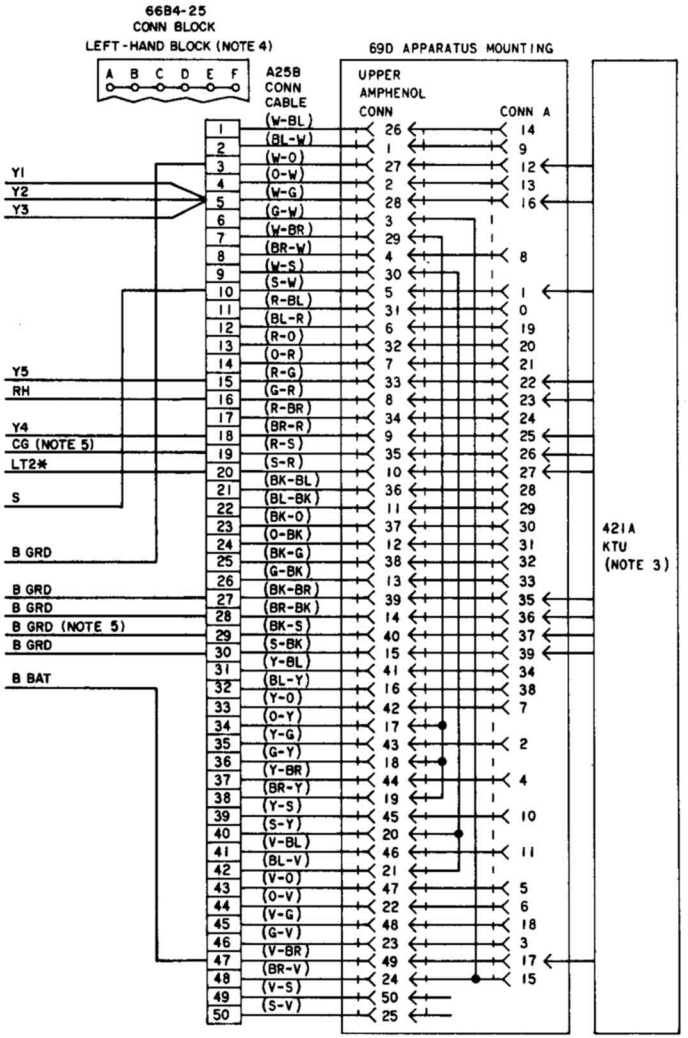

Fig. 29—602A Panel 421A KTU, Arranged for DSS, Deluxe Dial Intercom, Connections to Optional KTU Mounted in 69D Apparatus Mounting (Sheet 2)

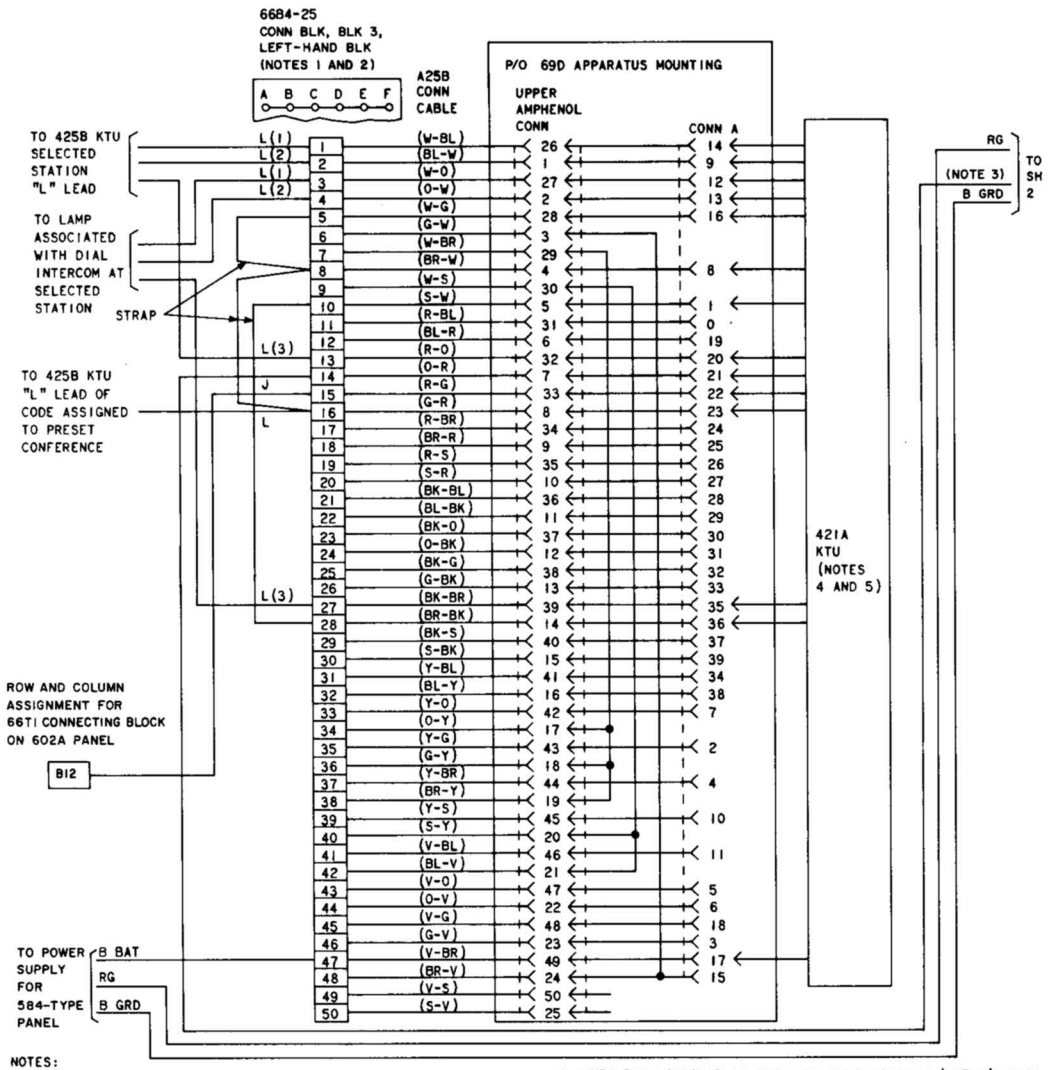

NOTES:

1. TERMINATE CONN CABLE TO COLUMN F IF LEFT-HAND BLOCK OR COLUMN A IF RIGHT-HAND BLOCK. REFER TO BLOCK DIAGRAM COVERING 6684-25 CONN BLOCK.
2. SEE FIG. 11 FOR PANEL AND CONNECTING BLOCK LAYOUT.
3. PROVIDE THE 413A KTU ONLY WHEN ACCESS TO THE PRESET CONFERENCE IS BY DIAL CODE OR BY DIAL CODE AND DSS. DO NOT PROVIDE THE 413A KTU WHEN ACCESS TO THE PRESET CONFERENCE IS LIMITED TO DSS.
4. WHEN THIS CIRCUIT IS PROVIDED, RING VOLTAGE (105V±) MUST BE USED TO OPERATE THE AUDIBLE SIGNALS CONNECTED TO THE DIAL INTERCOM LINE.
5. "W" OPTION MUST BE PROVIDED ON THE 421A KTU. ON 421A KTU OPTION BLOCK, STRAP TERMINALS AS FOLLOWS: 1 TO 2, 5 TO 6, 7 TO 8.
6. THE "CA" LEAD MUST CONNECT TO THE DIODE MATRIX WHETHER OR NOT THE 413A KTU IS PROVIDED.
7. WHEN RINGERS ARE USED AS AUDIBLE SIGNALS, REMOVE RINGER CAPACITORS FROM CIRCUIT.

Fig. 30—602A Panel, Deluxe Dial Intercom, Connections to Optional Preset Conference Circuit (421A KTU, Mounted in 69D Apparatus Mounting, 413A KTU Mounted in 69B Apparatus Mounting and a 1A1 Matrix Block) (Sheet 1)

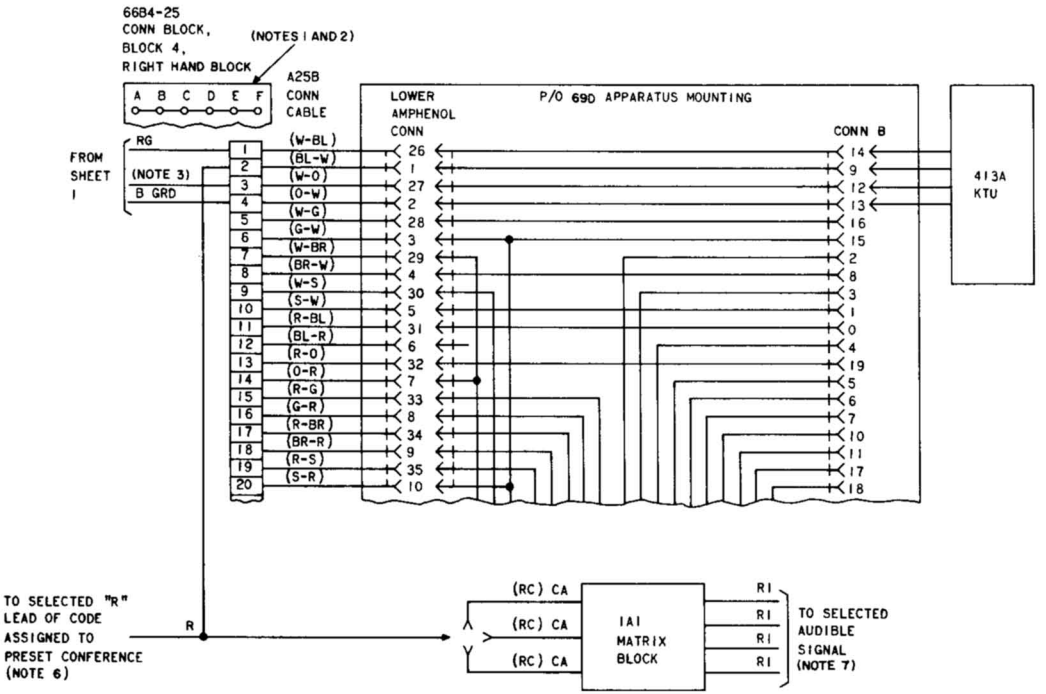

Fig. 30—602A Panel, Deluxe Dial Intercom, Connections to Optional Preset Confernce Circuit (421A KTU, Mounted in 69D Apparatus Mounting, 413A KTU Mounted in 69B Apparatus Mounting and a 1A1 Matrix Block) (Sheet 2)

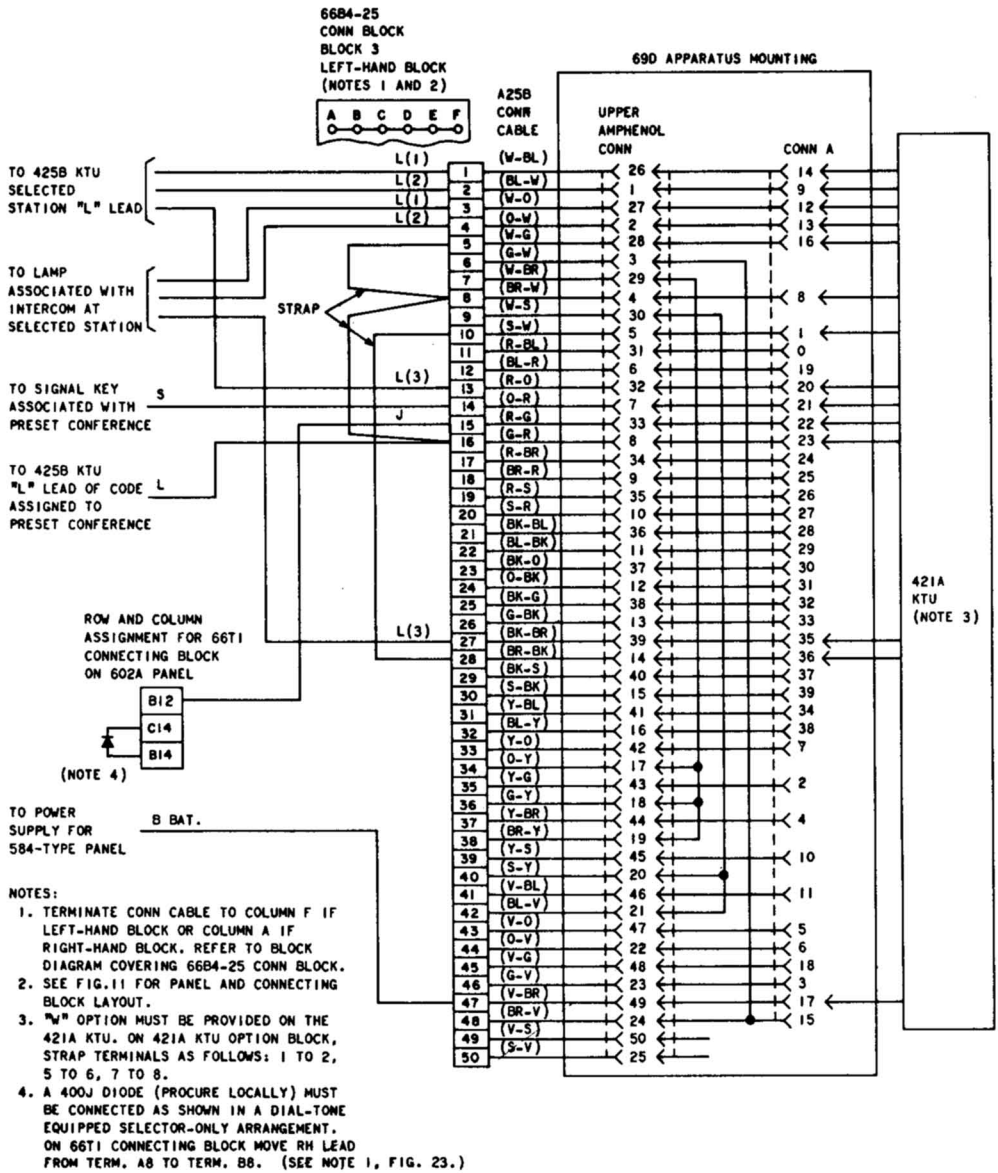

Fig. 31—602A Panel, Deluxe Dial Intercom, Connections to Optional Signal Key Preset Coference Circuit (421A KTU Mounted in 69D Apparatus Mounting)

SERVICE

620A (MD), 641A, AND 642A MODULAR PANELS

1A2 KEY TELEPHONE SYSTEM

IDENTIFICATION, INSTALLATION, CONNECTIONS, AND MAINTENANCE

CONTENTS PAGE

1. GENERAL 2
2. IDENTIFICATION 2
ORDERING GUIDE 2
DESIGN FEATURES 9
A. Common Features 9
B. 620A (MD) Modular Panel . . . 9
C. 620A2 Modular Panel 9
D. 641A Modular Panel 9
E. 642A Modular Panel 9
POWER 11
A. 79B1 Power Unit 11
B. 79B2 Power Unit 12
C. 90B1 Power Unit 12
D. 19-, 20-, 29-, or 30-Type Power Unit 13
3. INSTALLATION 13
PLANNING 13
INSTALLING 16
A. Centralized Installation 16
B. Stacking Panels 19
C. Grounding and Protection 19
D. KTU Installation 23
E. Applying Power 25
4. CONNECTIONS 26
CONNECTION INDEX 28
5. MAINTENANCE 29
Continuity Diagrams 29
KTUs 36
MODULAR PANELS 36
POWER UNIT 37
TESTING 37
TESTS 37
A. 400-Type KTU—CO/PBX Line Circuit . 45
B. 401-Type KTU—Manual Intercom Circuit 47
C. 414A KTU and 461A KTU—Manual Signaling, Ringdown Private Line . 49
D. 415-Type KTU—Automatic, DC Signaling, Ringdown Private Line 51

NOTICE
Not for use or disclosure outside the
Bell System except under written agreement

Printed in U.S.A.

CONTENTS PAGE

E. 416A KTU—Station Line Circuit . . 53

F. 419A KTU—Automatic Signaling, Ringdown Private Line 55

G. 469A KTU—Lamp Extender . . . 57

H. 471-Type KTU—Battery Reversal Toll Restriction 59

I. 407- or 424-Type KTU—Basic Dial Intercom Selector Circuit 67

J. 494A KTU—TOUCH-TONE Selector Circuit 69

K. 420A KTU—Long Line Circuit . . 79

L. 417A KTU—Add-On Conference Circuit 86

M. 418A KTU—Short Range, DC Signaling Private Line 90

N. 451B or 498A KTU—Music-On-Hold Circuit 103

O. 452A KTU—Power Failure Ringing Circuit 105

1. GENERAL

1.01 This section provides information for the 620A (MD), 620A2, 641A, and 642A modular panels (Fig. 1, 2, 3, and 4) and associated power units (Fig. 6).

1.02 This section is reissued to add:

- Information on the treatment of 1A2 Key Telephone System (KTS) and key telephone units (KTUs) under the Federal Communications Commission's (FCC) Registration Program
- Maintenance diagrams for the 620A-type, 641A, and 642A modular panels
- Connections and testing information for the 452A KTU (power failure ringing circuit)
- Use of 620A-type, 641A, and 642 panels with 630A key service panel (KSP).

1.03 This issue of the section is based on the following drawings:

- SD-69658-01, Issue 5A—Modular Panels, 620A (MD), 620A2, 626A, 641A, and 642A
- SD-82227-01, Issue 1—Power Unit, 79B1
- SD-82227-02, Issue 2—Power Unit, 79B2
- SD-82198-01, Issue 3—Power Unit, 90B1.

If this section is to be used with equipment or apparatus reflecting later issue(s) of the drawing(s), reference should be made to the SDs and CDs to determine the extent of changes and the manner in which the section may be affected.

1.04 Incoming central office (CO) lines to be installed in compliance with the FCC Registration Program must be routed through a standard network interface. Information on approved interfaces is contained in Sections 463-400-100 through 463-400-150.

1.05 ▶After January 1, 1980, connection of customer-provided equipment (CPE) or telephone company-provided equipment to the 1A2 KTS requires the use of a 33B voice coupler when providing music-on-hold. Also, after January 1, 1980, the 415B, 471C, and 479C KTUs must be used when providing their related services. Previously connected or Class C voice couplers and KTUs may be used for additions and maintenance at grandfathered installation for the life of the equipment, provided they are not modified.◀

2. IDENTIFICATION

2.01 The 600-series modular panels make installation easier, minimize connections, and reduce mounting and terminal space requirements.

2.02 These panels provide standard 1A2 KTS features and accommodate the 1A2 KTUs listed in Table A.

ORDERING GUIDE

2.03 This section covers the three initial modular panels coded as follows:

- Panel, Modular 620A (MD) or 620A2 (Line Services)

- Panel, Modular, 641A (Dial Intercom)
- Panel, Modular, 642A (Miscellaneous).

Information on the 626A panel which provides button-per-path intercom can be found in Section 518-215-421.

Note: The 620A (MD), 620A2, and 642A panels are equipped with 834055907 (P-40V590) guide assemblies.

(a) ***Replaceable Components (Table B)***

(b) ***Associated Apparatus (order separately)***

- Unit, Telephone, Key—order as required from Table A
- Unit, Power—refer to Table C for selection
- Block, Connecting, 92A—interconnects one 620A (MD), 620A2, 641A, or 642A modular panel to a 19-, 20-, 29-, or 30-type power unit
- Cord, Power

  824013262 (P-40J326)—1-1/2 feet

  824013270 (P-40J327)—2 feet

  824013288 (P-40J328)—4 feet

  824013296 (P-40J329)—6 feet

  824010995 (P-40J099)—12 feet
- Cord, P12D—power interconnect cable extender
- Insulator, Terminal, C Clip—for insulating RN terminals on all panels and 105-volt terminals on 641A panel.

(c) ***Optional Apparatus (order separately; Table D)***

◆TABLE A◆

600-SERIES MODULAR PANEL AND KTU SELECTION AND CONNECTION FIGURE INDEX

KTU	SIZE		CIRCUIT FUNCTION	MODULAR PANEL			TEST	CONNECTION FIGURE (SEE NOTE)
	INCHES	PINS		620A/A2	641A	642A		
400B, C, D	4	18	CO/PBX Line	•			A	18
400G	4	18	CO/PBX Line	•			A	19
400H	4	18	CO/PBX Line	•			A	20
401-Type	4	18	Manual Intercom	•			B	21
407B, C	8	80	Dial Intercom, 10-Code		•		I	31 thru 38
413A	4	18	Auxiliary Ringup	•				22
414A	4	20	Manual Signaling, Ringdown, Private Line	•			C	23
415A	4	18	Automatic, DC Signaling, Ringdown, Private Line	•			D	24
416A	4	20	Station Line	•			E	25
417A	4	40	Add-On Conference			•	L	40
418A	4	20	Short Range, DC Signaling, Private Line			•	M	41
419A	8	80	Automatic Signaling, Ringdown, Private Line	•			F	26
420A	4	18	Long Line			•	K	37
421A	4	40	Power Failure Transfer			•		42
			Direct Station Selection			•		38
			Audible Signal Suppression			•		43
422B	4	40	Station Busy Selector			•		35,36
424-Type	8	80	Dial Intercom, 19-Code		•		I	31 thru 38
425-Type	8	80	Dial Intercom, Flashing Lamp		*	•		33,34,35,36
428A	4	40	Multiline Exclusion			•		44

♦ TABLE A (Contd) ♦

600-SERIES MODULAR PANEL AND KTU
SELECTION AND CONNECTION FIGURE INDEX

KTU	SIZE		CIRCUIT FUNCTION	MODULAR PANEL			TEST	CONNECTION FIGURE (SEE NOTE)
	INCHES	PINS		620A/A2	641A	642A		
429A, B	4	40	Supplementary Hold Detector			•		45
430A	4	20	Flutter Generator			•		45
440A	8	80	TOUCH-TONE Adapter		*	•		31,33,34,36
448A	4	40	Variable Delay Timer			•		46
449A	4	40	Immediate Transfer Control			•		47
451B‡	4	40	Music-On-Hold			•	N	48
452A	4	40	Power Failure Ringing Circuit			•	O	
461A	4	18	Manual Signaling, Ringdown, Private Line	•			C	23
467A	4	18	Low Voltage Monitor	•		•		
469A	4	18	Lamp Extender	•			G	27
471-Type	4	18	Battery Reversal Toll Restriction	•			H	28
476†	4	20	Dial Tone, Station Busy Tone, and Audible Ringback Tone			•		34,35,36
478B	8	80	TOUCH-TONE Adapter		*	•		31,33,34,36
479-Type	8	80	Rotary Dial Toll Restriction			•		9
494A	8	80	TOUCH-TONE Selector Circuit		•		J	32
498A‡	4	40	Music-On-Hold			•	N	50

Note: Connection figures are designed for current model KTUs but are applicable for all codes indicated in this table.

* If 425A or B KTU is used in 641A panel, the 440A or 478B KTU must go in a 642A panel.

† 476A KTU replaces 423B (MD). Do not use 423A KTU in modular panels.

‡ The 451B KTU supplies music-on-hold for seven circuits. The 498A KTU contains four circuits and can be increased to seven by the addition of a 116A1 circuit module to the KTU.

TABLE B

REPLACEABLE COMPONENTS

UNIT	DESCRIPTION			IDENTIFICATION CODE
Modular Panel	Lamp		10V	51A
	Indicator, Fuse		White	KS-14174, L1
			Brown	KS-14174, L8
			Green	KS-14174, L4
	Fuse		1-1/3 amp	70A
			3/4 amp	70H
			5 amp	70D
Power Unit	Fuse	Input	2 amp*	BUSSMAN MDL-2
			5 amp	BUSSMAN MDX-5
		Output	2 amp	24C
			3 amp	24B
			5 amp	24F
	Interrupter		10V	KS-19175, L3

* 79B2 only.

TABLE C

POWER UNIT CAPACITIES

POWER UNIT	CAPACITY
79B1	Maximum three 620A or 620A2 panels or two 620A or 620A2 panels plus any combination of two 641A or 642A panels or any combination of four 641A or 642A panels plus four 66B4-25 connecting blocks or four 16A1-160 terminal blocks
79B2	Maximum of four 620A, 620A2, 641A, or 642A panels in any combination plus four 66B4-25 connecting blocks or four 16A1-160 terminal blocks
90B1	Maximum of ten 620A, 620A2, 641A, or 642A panels in any combination plus sixteen 66B4-25 connecting blocks or sixteen 16A1-160 terminal blocks
19-, 20-, 29-, or 30-type	One or two 620A, 620A2, 641A, or 642A panels where interrupted power is not required or can be obtained from 584C panel or 232-type KTU.

Note: If 630 KSP is used, the 79- or 90-type power unit is not required until the third additional modular panel is added.

TABLE D

OPTIONAL APPARATUS
(ORDER SEPARATELY)

DESCRIPTION		IDENTIFICATION CODE
Adapter, Plug, Power Cord		HUBBELL BL-12433
Adapter, Bridging, Quick-Connect	Horizontal	183A2
	Vertical	183B2
Block, Matrix		1A1
Backboards	Green	183A2*
	Blue	183B1*
	Red	184A1, B1†, B2†
	Yellow	185A1
	White	187B1
	White	198A
Block, Connecting		66B4-25
		66B3-50
		66M1-50
Block, Terminal		16A1-160
Cord (Power Interconnect Cord Extender)	8 ft. ‡	P12D
Cover	For 620A or 620A2	151A
	For 641A or 642A	152A
Cover (End Cap)		153A
Tag, Ground		E3013B
Trough, Wiring (with Cover)		840348288

* Equipped with 89B brackets.

† Equipped with four 66B4-25 connecting blocks.

‡ 8 ft. is standard length. Available in other lengths if specified on order.

DESIGN FEATURES

A. Common Features

2.04 The 600-series modular panels share the following features:

- Accommodate 400-series KTUs providing services described in Table A.
- 66-type quick-connect terminal field.
- Steady and interrupted power (Table F) provided by an external power source via factory-wired, 12-conductor, 42-inch power cable. Extender cords are available and must be ordered separately (Table D).
- Retainer and guide assembly serve to lock KTUs in connectors (Fig. 1).
- Dimensions: same height and depth; 620A twice as wide as 641A or 642A (Table E).
- Built-in lamp and fuse block assembly (Fig. 5) with self-indicating fuses and lamps which offer visual indications of the status of a related circuit.

B. 620A (MD) Modular Panel

- Provide line and auxiliary services (maximum 8) as listed in Table A.
- 913B connectors accommodate eight 4-inch KTUs.
- Two terminal fields (RED) divided into quadrants and wired to similarly positioned connectors (Fig. 2) which offer KTU services independent of each other.
- Lamp load not to exceed 100 lamps per panel (60 if 79B1 power unit is used) or 20 lamps per line circuit. Lamp loads in excess of these requirements must use lamp extenders (469A KTU).

C. 620A2 Modular Panel (Fig. 1 and 2)

The 620A2 panel, shown in Fig. 14 through 29, is identical to the 620A except for the following:

- Has a rigid metal PWB backplane.
- Provides access to the 10-volt ac signal required for the buzzer operation when manual intercom is desired. This access is provided on a quick-connect terminal in each of the 8-line quadrants of the termination field at the bottom of the panel (Fig. 14).
- Provides access to the -24 volt dc signal required for buzzer operation where manual intercom is to be provided. The -24 volt dc signal appears on a quick-connect terminal in quadrant 1A only of the termination field at the bottom of the panel (Fig. 14).
- Has a fourth fuse at the top of the panel for 10-volt ac (Fig. 5).

D. 641A Modular Panel (Fig. 3)

- Provides 10- and 19-code dial intercom services (Tables A, G, and H)
- Optionally accommodates either flashing lamp circuit (425B KTU) or TOUCH-TONE® adapter (440A or 478B KTU)
- Four 914B connectors are vertically paired to accommodate two 8-inch KTUs
- Terminal field (YELLOW) utilized by all connectors for a common dial intercom service [***NOT*** related to individual connectors by quadrants as on the 620A (MD), 620A2, and 642A panels]
- Built-in lamp and fuse block assembly equipped with fuses in positions 1A and 1B, and a lamp in position 1A (remaining fuse and lamp positions unequipped) (Fig. 5)
- Provides station cross-connect field and option terminal field with designated areas TT (TOUCH-TONE), POWER, LAMP FLASH, and OPTIONS.

E. 642A Modular Panel (Fig. 4)

- Provides miscellaneous KTU services (Table A)
- Four 40-pin 914B connectors accommodate four 4-inch KTUs or two 8-inch KTUs (through removal of guide assemblies)

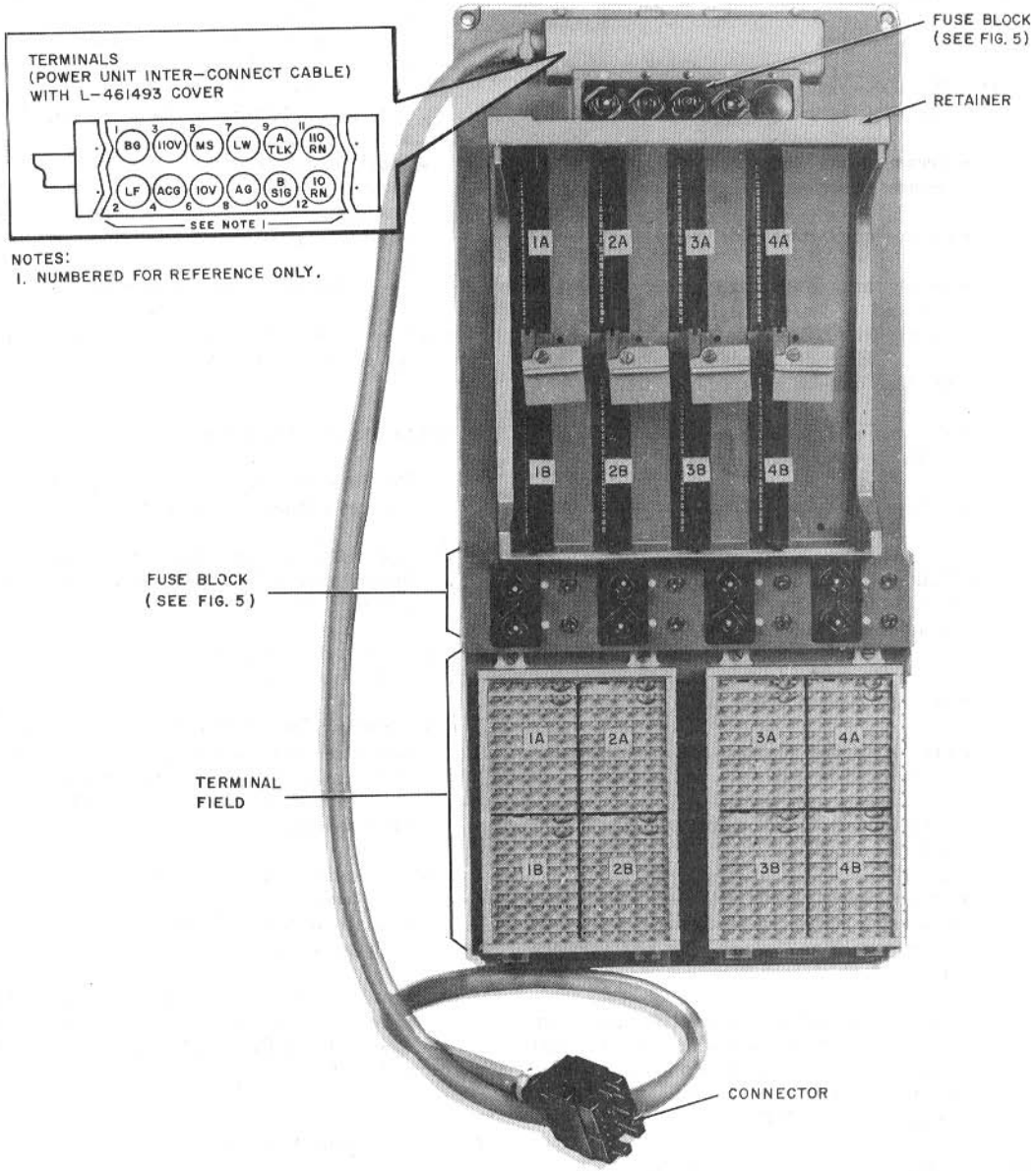

Fig. 1—620A2 Modular Panel

TABLE E

DIMENSIONS

DESCRIPTION		(IN INCHES)		
		WIDTH	HEIGHT	DEPTH
Modular Panel	620A 620A2	8-1/2	18-3/8	5-3/4
	641A 642A	4-1/4	18-3/8	5-3/4
Power Unit	79B1 79B2	14-1/8	8-3/8	6-5/16
	90B1	16-1/8	9-1/4	6-5/16
	19-, 20-type	8-3/4	9-1/4	5
	29-, 30-type	14-1/8	18-3/8	6-3/8

- Terminal field (YELLOW) divided into quadrants and wired to similarly positioned connectors which offer KTU services independent of each other.

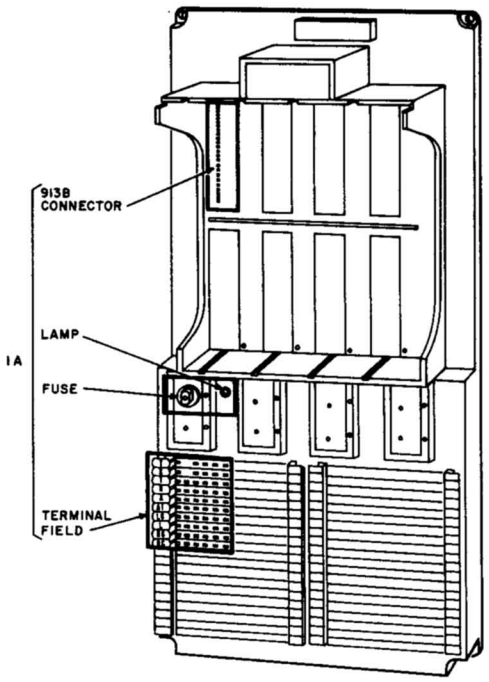

Fig. 2—620A (MD) or 620A2 Modular Panel, Typical Connector, Fuse, Lamp, and Terminal Field Relationship

POWER

2.05 The 79B1, 79B2, and 90B1 power units (Fig. 6):

- Have capacity to serve modular panels in varied combinations (Table C)
- Provide all required KTS voltages per Table F
- Provide three ac voltage input taps
- Self-contained interrupter
- Designed for horizontal mounting on backboard assembly (provided) above modular panel.

Note: Modular panel installations using a 79- or 90-type power unit may be susceptible to KTU damage or operation of the -24B fuse due to transient voltages. The 79B2 and 90B1 power units manufactured after October 1975 have a diode added and are marked "521A Diode Added" on the insulator. Later versions of the 79B2 are manufactured with a KS-19175, List 5 interrupter and are marked "Protection Not Required." The 90B2 power unit will also be equipped with the List 5 and will also be marked. Any 79- or 90-type power unit not having the diode added or not equipped with the List 5 interrupter can be protected by installing a 140A protector in an unused socket of the power unit. If all sockets are in use, the transient energy will be sufficiently distributed among the panels so the surge protection is not required.

A. 79B1 Power Unit

- Early production model utilizing 20A2 power unit

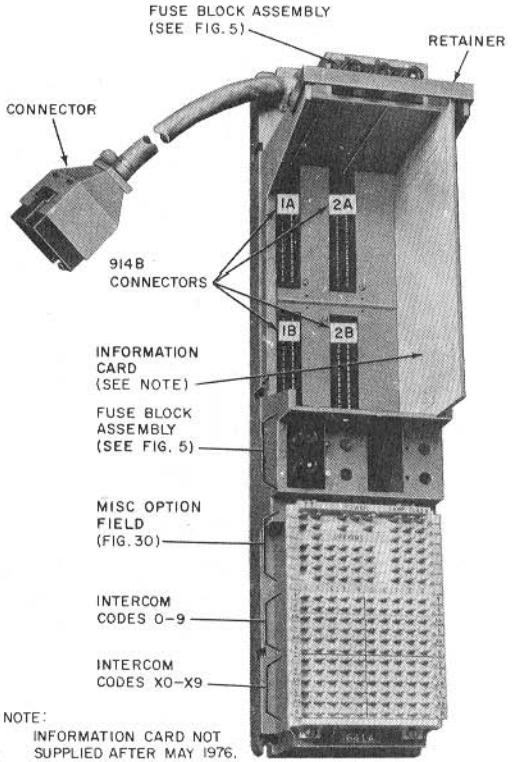

Fig. 3—641A Modular Panel

- Equipped with four multipled-wired output connectors

- Serves a maximum of three 620A-type panels or two 620A-type panels plus ***any combination*** of two 641A or 642A panel or ***any combination*** of four 641A or 642A panels; plus up to four 66B4-25 connecting blocks or four 16A1-160 terminal blocks if required for line multiples in excess of panel capacity.

B. 79B2 Power Unit

- Replacement for 79B1 model utilizing a 20A3 power unit and providing additional direct current and lamp power

- Equipped with four multipled-wired output connectors

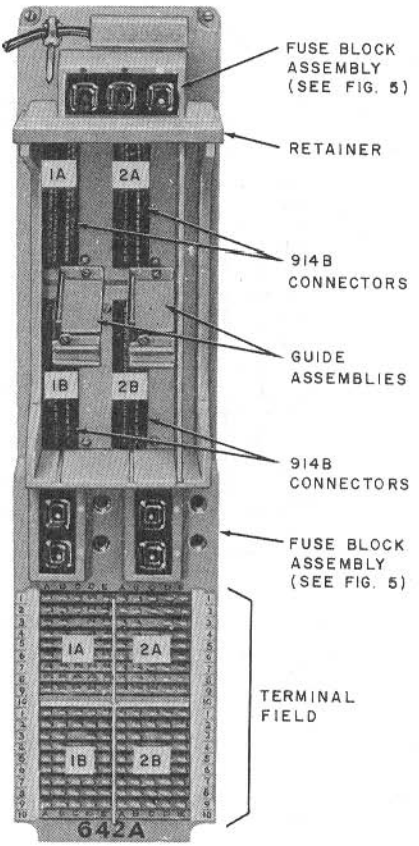

Fig. 4—642A Modular Panel

- Serves a maximum of four 620A-type, 641A, or 642A panels ***in any combination*** plus four 66B4-25 connecting blocks of four 16A1-160 terminal blocks if required for line multiples in excess of panel capacity.

C. 90B1 Power Unit

- Utilizes a 30A1 power unit

- Equipped with ten multipled-wired output connectors

- Serves a maximum of ten 620A-type, 641A, or 642A panels ***in any combination*** and

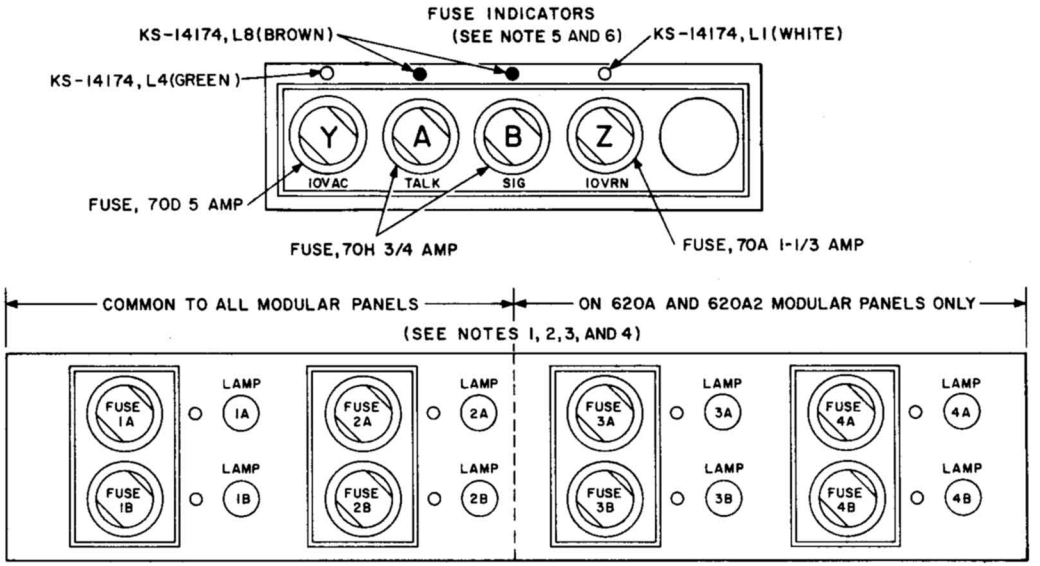

NOTES:

1. ALL PANELS (WHEN REQUIRED):
   - FUSES 1A-4B ARE 70A, 1-1/3 AMP.
   - LAMPS 1A-4B ARE 51A, 10V AC.
   - FUSE INDICATORS 1A-4B ARE KS-14174, L1 (WHITE).
2. 620A OR 620A2 MODULAR PANEL:
   - FUSES AND LAMPS 1A-4B SERIES WIRED IN LINE LAMP OUTPUT CIRCUIT OF CONNECTORS 1A-4B RESPECTIVELY.
3. 641A MODULAR PANEL:
   - FUSE AND LAMP 1A (10V STEADY) WIRED TO BUSY LAMP CIRCUIT OF SELECTOR (407 OR 424 KTU)
   - FUSE 1B (10V FLASH) WIRED TO INPUT OF FLASHING LAMP CIRCUIT (425 KTU)
   - REMAINING FUSE AND LAMP POSITIONS NOT EQUIPPED
4. 642A MODULAR PANELS:
   - FUSE 1A (10V STEADY INPUT) WIRED TO CONNECTORS 1A AND 1B
   - FUSE 2A (10V STEADY INPUT) WIRED TO CONNECTORS 2A AND 2B
   - FUSE 1B (10V FLASH INPUT) WIRED TO ALL CONNECTORS
   - FUSE 2B (10V WINK INPUT) WIRED TO ALL CONNECTORS
   - LAMP POSITIONS TO BE FIELD EQUIPPED PER JOB REQUIREMENTS
5. SOME EARLY PANELS WERE MANUFACTURED WITH THE 1-1/3 AMP FUSE IN POSITION A AND 3/4 AMP FUSES IN POSITIONS B AND Z. THE KS-14174 INDICATORS SHOULD BE REARRANGED TO AGREE WITH FUSES. WHERE REQUIRED THE NECESSARY INDICATORS CAN BE ORDERED AS: D-180586 KIT OF PARTS
6. ON 620A2 PANELS SD-69658-01 ISSUE 5B CHANGED FUSE Y FROM 1 1/3 AMP TO 5 AMP AND INDICATOR FROM L1 TO L4

Fig. 5—Line Lamp and Fuse Block Assembly

up to sixteen 66B4-25 connecting blocks or sixteen 16A1-160 terminal blocks if required for line multiples in excess of panel capacity.

D. 19-, 20-, 29-, or 30-Type Power Unit

- Used at small installations for one or two panels where interrupted power is not required, or can be separately obtained from a 584C panel or 232-type KTU
- Requires a 92A connecting block as interface between power unit and modular panel power connector.

3. INSTALLATION

PLANNING

3.01 Select a wall location for a centralized key telephone installation in accordance with the following:

- Customer approval and best interest.
- Accessible with adequate illumination for maintenance.
- Wall offering adequate support and stability.

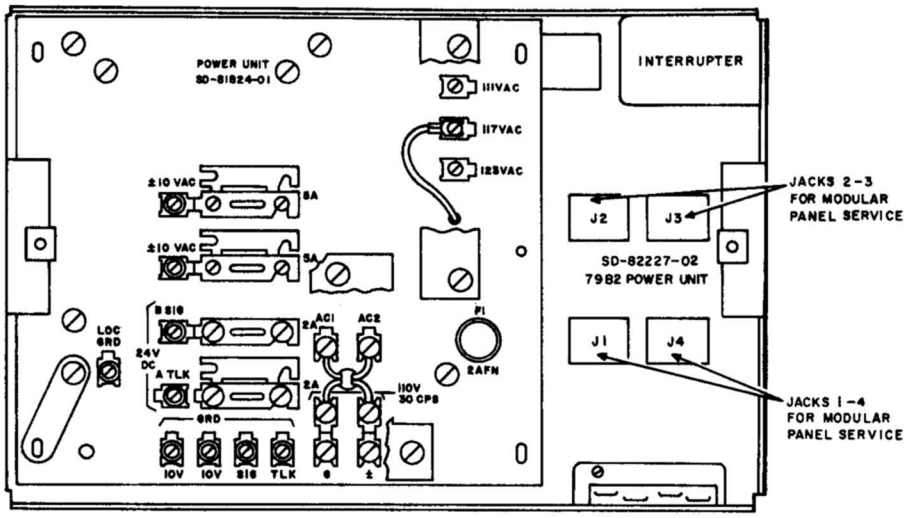

FRONT VIEW OF 79B2 POWER UNIT

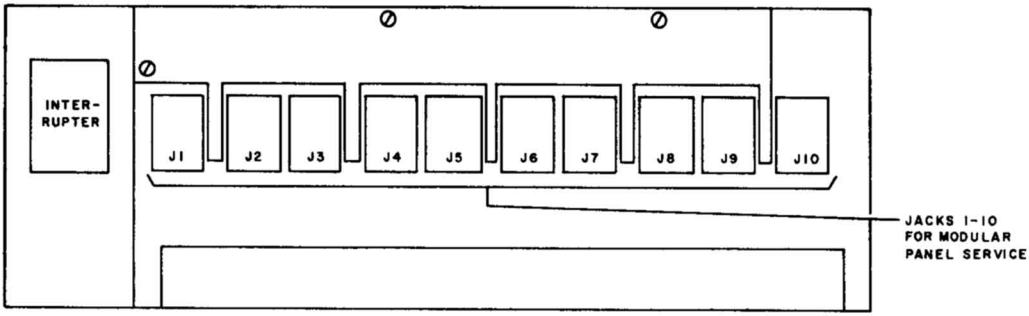

BOTTOM VIEW OF 90B1 POWER UNIT

Fig. 6—Modular Panel Power Jacks on 79B1, 79B2, and 90B1 Power Units

- As close as practicable to stations being served.
- Close to conduit or duct system for cabling purposes.
- Near commercial ac power receptacle(s).
- Sufficient clearance above floor to avoid damage from water or blows incident to cleaning.

TABLE F

POWER UNIT OUTPUT

POWER UNIT			LEAD		TERMINAL NUMBER		
79B1	79B2 90B1	19-, 20-, 29- OR 30-TYPE	DESCRIPTION	DESIGNATION	POWER UNIT JACKS AND 92A CONN. BLK.	MOD. PANEL INTERCONNECT (FIG. 1)	MOD. PANEL 913B/914B CONNECTOR
20-26V DC	20-26V DC	20-26V DC	Signal	B SIG	8	10	17
				B GRD	20	1	15
20-26V DC	18-26V DC	18-26V DC	Talk	A TLK	12	9	18
				A GRD	16	8	3
105-125V 30 HZ	105-125V 30 HZ	105-125V 30 HZ	Ringing	105V 30 HZ	9	3	10
				ACG and MG	24	4	6
9-11V AC	8.75-11V AC	8.75-11V AC	Lamp Supply	10V AC	4	6	4
105-125V 30 HZ	105-125V 30 HZ	105-125V 30 HZ	Interrupted Ring	105V RN*	1	11	
9-11V AC	8.75-11V AC	16-20V AC	Interrupted Buzz	10V RN*	19	12	
9-11V AC	8.75-11V AC	8.75-11V AC	Flash	LF*	17	2	7
9-11V AC	8.75-11V AC	8.75-11V AC	Wink	LW*†	21	7	2
			Motor Start	MS	22	5	5

* Interrupter must be operating for interrupted voltages to be present. The 19-, 20-, 29-, and 30-type power units do not have an interrupter.

† LW does not appear on 641A panel.

- Clean, dry, well-ventilated, and free from flammable or corrosive fumes.
- Where the surrounding room temperature normally does not exceed 110°F. Avoid locations near radiators, steam pipes, registers, and similar heating devices which would subject the equipment to excessive heat.

3.02 Select appropriate modular panels and KTUs (Table A), backboards and connecting blocks (Table D), per job requirements.

3.03 Determine type and quantity of power units required (see POWER, paragraph 2.05 or Table C).

Note: Varied combinations of panels per power unit are desirable to more evenly balance power unit load; eg, on installations having more than one power unit, mix panel codes on any single power unit rather than having one power unit serve only 620A-type panels, and another to serve 641A or 642A panels.

3.04 A 19-, 20-, 29-, or 30-type power unit can be used to supply a small number of 641A or 642A panels, either in installations where the power unit is in place or in new installations as long as the output of the power unit is not exceeded and interrupted power (flash, wink, etc) is not required by the KTUs. A 92A connecting block is required to provide a receptacle for the panel power connector and terminals for the leads from the power unit. The lack of interrupted power restricts usage to the following KTUs:

- 641A panel—407- and 424-type, 440A, 478B or 494A KTU
- 642A panel—417A, 420A, 421A, 422B, 428A, 429A/B, 430A, 440A or 478B, 448A, 449A, 451B, 476A, 471A/B or 479B KTU.

If interrupted power can be obtained from an associated 584C panel or 232-type KTU, any KTUs that can be mounted in the panels per Table A (including the 620A-type panel) may be used.

3.05 Customer must provide adequate number of commercial ac receptacles to meet job requirements in accordance with the following:

- Not controlled by a switch
- Separately fused if possible
- Within access of power unit cord(s), preferably 6- to 7-foot high
- AC receptacles must be 3-wire grounded type.

3.06 For additional information required to plan the installation of a KTS, refer to the following sections:

- 518-010-101—Centralized Key Telephone Installations
- 518-010-105—KTS, Grounding and Special Protection Requirements
- 518-215-100—1A2 KTS, Identification and Arrangements
- 518-215-400—Service, 1A2 KTS, Line Services
- 518-215-401—Service, 1A2 KTS, Auxiliary Line Services
- 518-215-402—Service, 1A2 KTS, Intercom Services
- 518-215-403—Service, 1A2 KTS, Control Services.

INSTALLING

3.07 Use care unpacking modular panels, power units, and KTUs to prevent damage to them.

A. Centralized Installation

3.08 ▶A preferred installation method is illustrated in Fig. 7 using the 630A KSP (Section 518-215-424) as the first modular panel in a centralized terminal field. The 287A1 power supply in the 630A KSP will power two additional modular panels. With the arrangement in Fig. 7, the installer has the option of using the 113A1 connecting unit (CU) and modular panel terminals as a station terminal (BLUE) field, or may use the 113A1 CU and modular panel terminals as a KTS equipment (RED) field with the station terminal (BLUE) field mounted below.◀

3.09 ▶In Fig. 8, the 620A-type, 641A, and 642A panels are mixed in any order with 184-type backboards mounted in a single row directly above a WHITE and BLUE backboard field. No space between adjacent panels should be left unless stacking panels (see ***Note***) or if covers and end panels are used (paragraph 3.10).◀

> ***Note:*** Some locations may be limited for space or otherwise will not allow this arrangement and will require stacking of panels one above the other (see Stacking Panels, paragraph 3.11).

3.10 A recommended sequence for mounting modular panels, backboards, and power units is as follows (Fig. 8):

(1) Mount a 183A2 (GREEN) backboard in lower left corner, 1 foot above floor. Stack second GREEN backboard atop first (see ***Note***).

> ***Note:*** When job requirements call for less than two BLUE or GREEN backboards, the lower backboard may be omitted and adequate

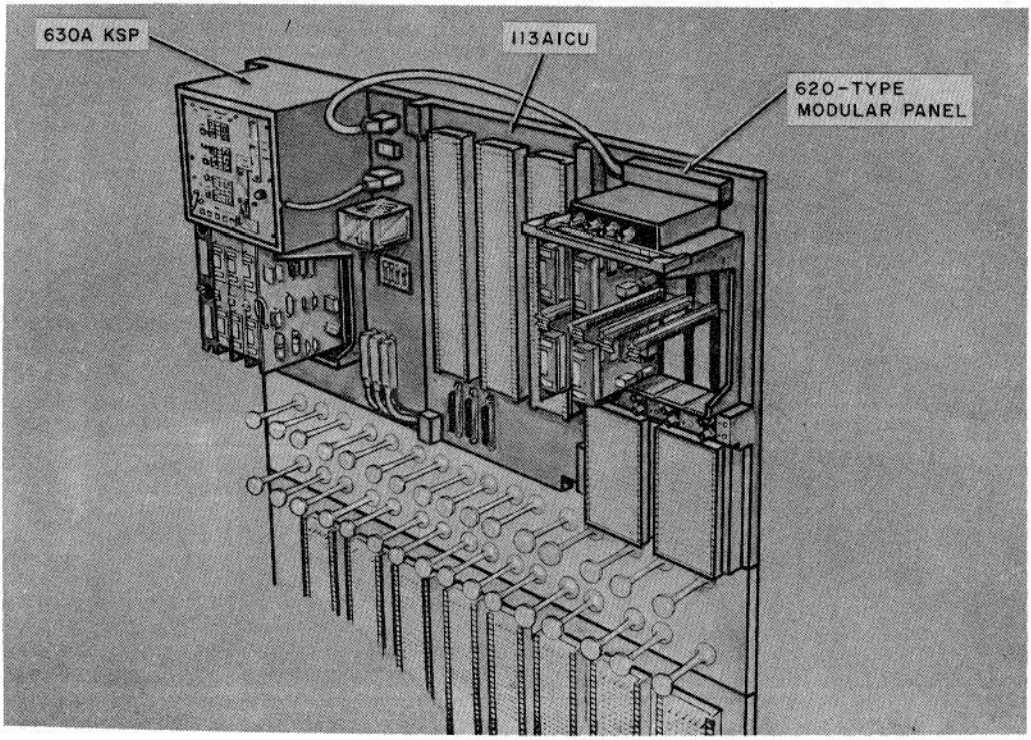

Fig. 7—Typical Large KTS Installation With 630A KSP, 113A1 CU, and 620-Type Modular Panel

space allowed for its addition as future growth demands.

(2) Place a 185A1 (YELLOW) backboard atop second GREEN backboard.

(3) Mount 183B1 (BLUE) backboards, stacked two high and butted next to GREEN backboards.

(4) Mount a 187B1 (WHITE) backboard atop each uppermost BLUE backboard, butting first against the side of the YELLOW backboard, and expanding from left to right. WHITE backboards must be installed to the widest point of either the RED (modular panel) or BLUE terminal field.

(5) Line, intercom, and miscellaneous panels, selected per job requirements, may be intermixed freely in the RED terminal field butting atop the WHITE backboards. First panel is placed above the extreme left BLUE backboard and the remaining panels suitably arranged and added in order from left to right. If covers are to be used on the panels, leave 1/2-inch space between the top of the WHITE backboards and the bottom of the panels and 1-inch space between adjacent panels. If wiring troughs are also used, allow 1/2 inch between top of panels and wiring trough. (A paper template is provided with each panel to facilitate mounting.)

Note: The 16A1-160 terminal blocks or 184A1, B1 or B2 (RED) backboards may also be intermixed with modular panels as desired to

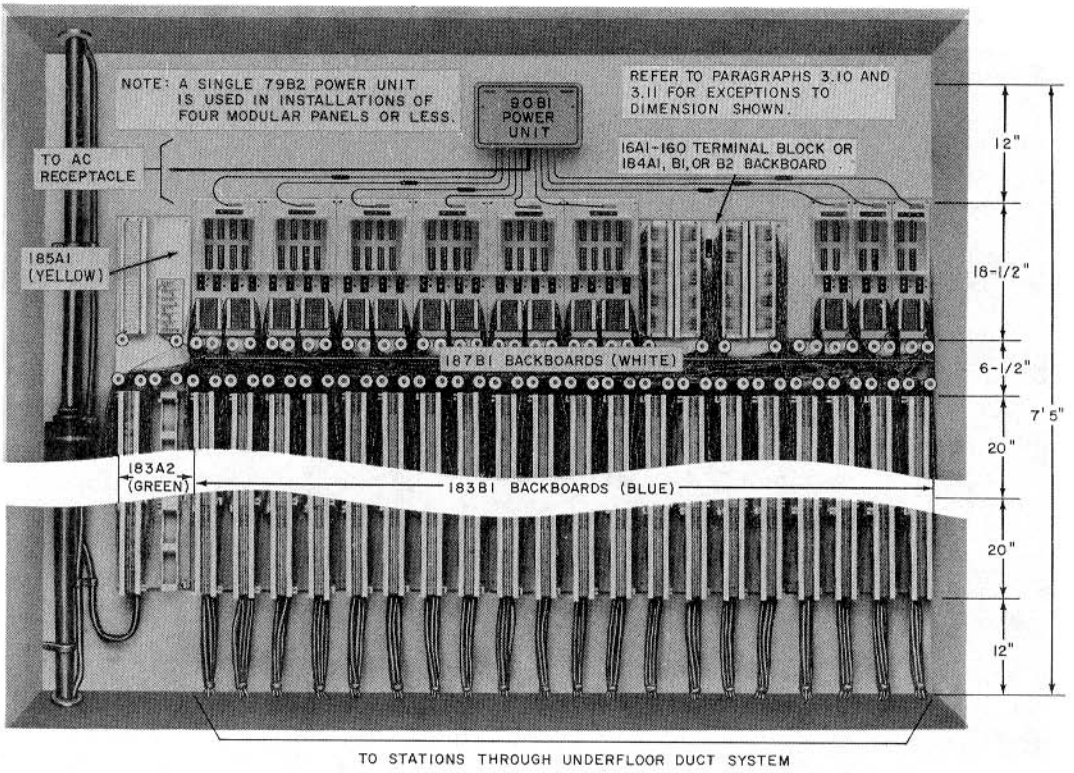

Fig. 8—Centralized Terminal Field, Typical Arrangement of Modular Apparatus

provide station terminations in excess of the panel terminal capacity (Fig. 8 or 9). The 16A1-160 terminal block is the same height as the modular panels and half the width of a 620A-type panel. Two connecting blocks are provided which duplicate the designations and quadrants of a 620A-type panel. If required, the terminal blocks will accept 152A covers and 153A end caps.

(6) The 79B1, 79B2, and 90B1 power units are to be mounted above the cluster of modular panels they service with top of unit(s) 7 feet 5 inches from the floor. Add 1 inch to this dimension if wiring trough is used.

Note: Power units must be mounted in an area allowing adequate ventilation.

(7) Fasten the backboard plate assembly to the wall using appropriate fasteners.

(8) Hang power unit on backboard and secure it with the machine screw(s) provided.

(9) Plug single-ended power interconnect cable of modular panel into appropriate connector of power unit. If it will not reach the power unit, use a P12D cord (Table D) to complete the connection. ▶To disconnect power cord, squeeze the tabs on the top and bottom of the power cord connector and pull out.◀

(10) Wiring troughs (Fig. 11) may be used to hold excess loops of power cable and improve the appearance of the installation. Mount the troughs horizontally on the wall directly above the modular panels (mounting screws to be

obtained locally). Press the loose power cable into the slots, looping it until slack is removed. Put cover on troughs. One trough will fit above two 620A-type panels or four 641As or 642As. Snap-on covers are provided with the wiring trough to retain the cables and to improve appearance.

Caution: Do not apply commerical ac power until completion of paragraph 3.29.

(11) For 19- or 20-type power unit, install and connect as indicated in Section 167-440-201. For 29- or 30-type power unit, install and connect as indicated in Section 167-446-101. Mount the 92A connecting block in reach of the power cable of the modular panel or extend with a P12D cord.

(12) Interconnect the 92A connecting block and the power unit as shown in Fig. 51. The recommended wiring is as follows:

(a) For a 641A or 642A panel, use a 451M cable, a 12-pair D inside wiring cable, or individual 18-gauge solid wires. If a 12-pair inside wiring cable is used, each pair should be skinned, twisted together, and terminated as a single conductor.

(b) For a 620A-type panel, use a 457M cable or individual 18-gauge solid wires. ***Do not*** use inside wiring cable since four conductors would be required for each connection to provide adequate current-carrying capacity. This number of twisted conductors cannot be reliably terminated.

Table I provides the color codes for D inside wiring cable and 451M or 457M cables. After all connections are made, insert the power interconnect cable of the modular panel into the connector on the 92A connecting block.

B. Stacking Panels

3.11 Where modular panels must be stacked one above the other, the following installation method is recommended (Fig. 9 and 10).

- Place 198A backboards between the upper and lower rows of modular panels to provide a means of routing wiring to the inner quadrants of the upper panels.
- The 620A-type and 642A panels and 184-type backboards, if required, may be mixed in any order provided similar size units are mounted atop one another.
- A 2-inch space must separate the sides of each panel. This space allows cross-connect wiring to be run vertically between panels.
- Power unit(s) mounts in an area allowing adequate ventilation with top of unit approximately 8 feet above floor.
- Power interconnect cables are routed in a direction up and over the top of the panels to the power unit connectors.

Note: Minimize intermeshing power interconnect cables and cross-connect wiring.

3.12 Cross-connect wiring should run straight down from the modular panel fanning strip to the WHITE field. All horizontal travel is made within the WHITE field.

C. Grounding and Protection

3.13 ***Grounding:*** To prevent damage to the telephone equipment, it is imperative the KTS be properly grounded and protected to limit voltage surges which may occur due to:

- Malfunction of power unit
- Crosses between telephone and power lines
- Power line surges
- Lightning surges.



The susceptibility of surge damage to semiconductor components used in 400-series KTUs requires the grounding and protection procedures be followed carefully. Properly protected and grounded installations will minimize service failures that can result from surge voltages or difference between dissimilar grounds. Refer to Section 518-010-105 for coverage

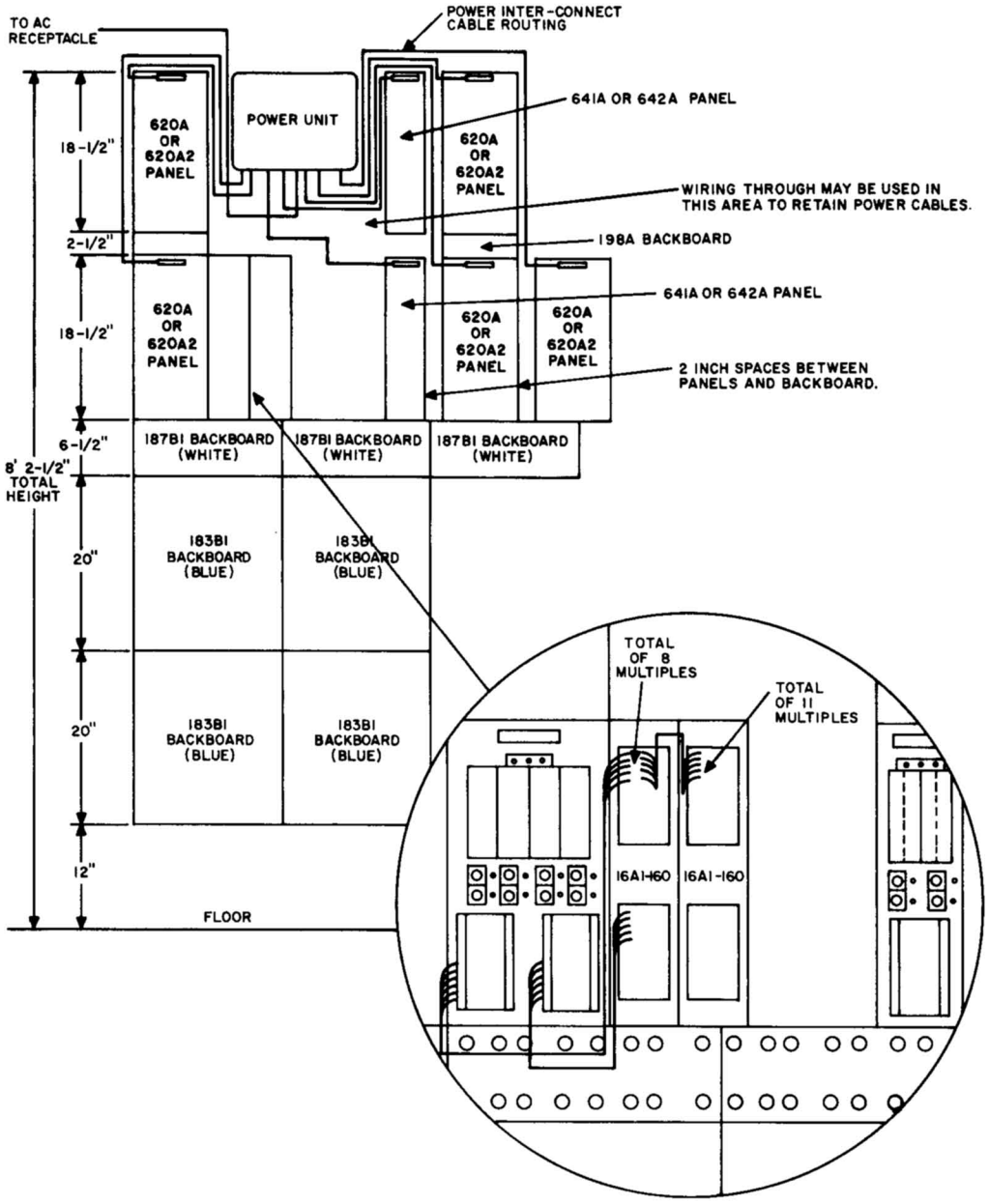

Fig. 9—Stacked Modular Apparatus and Method of Terminal Multiplying Using 16A1-160 Terminal Blocks

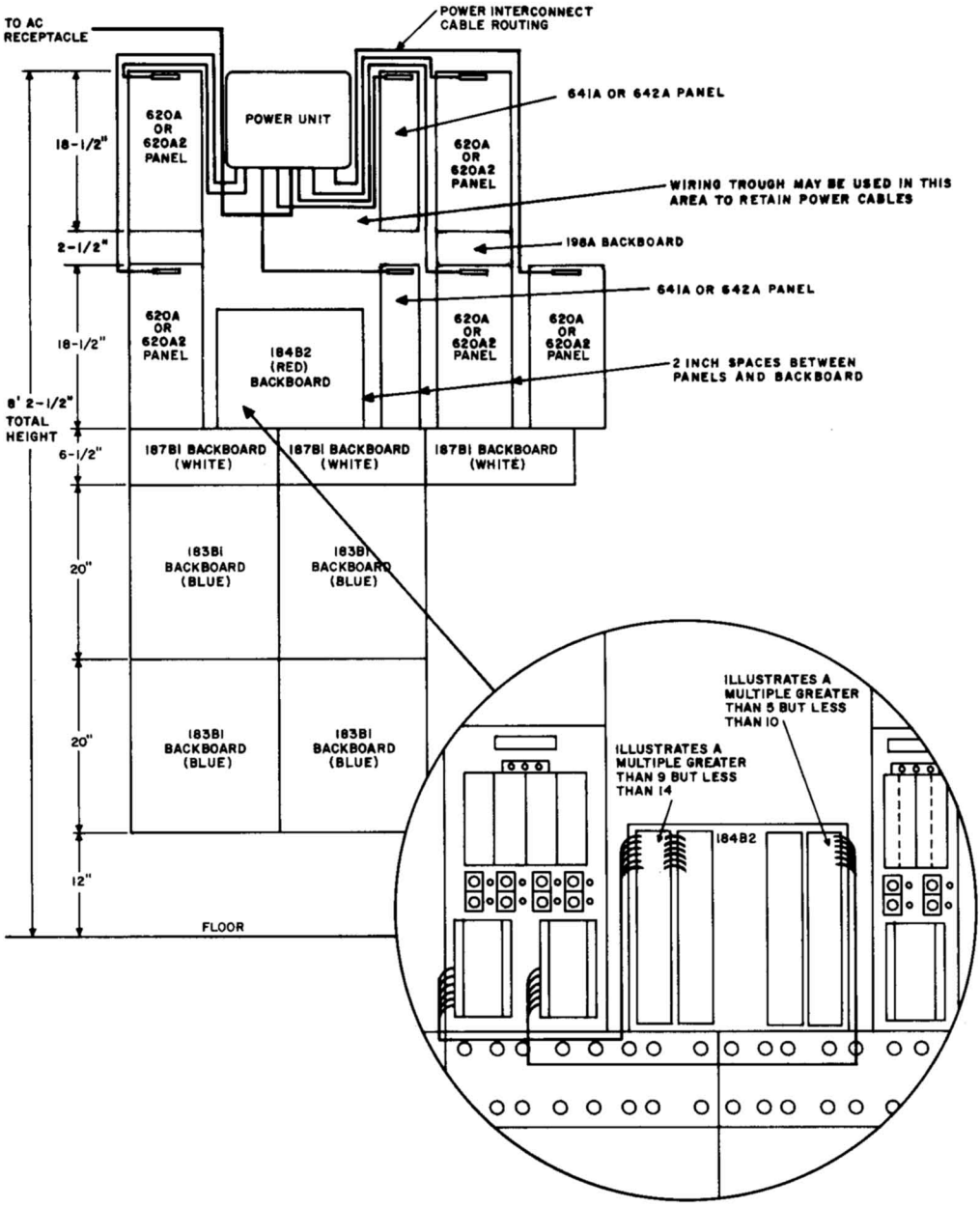

Fig. 10—Stacked Modular Apparatus and Method of Terminal Multiplying Using 184-Type Backboards

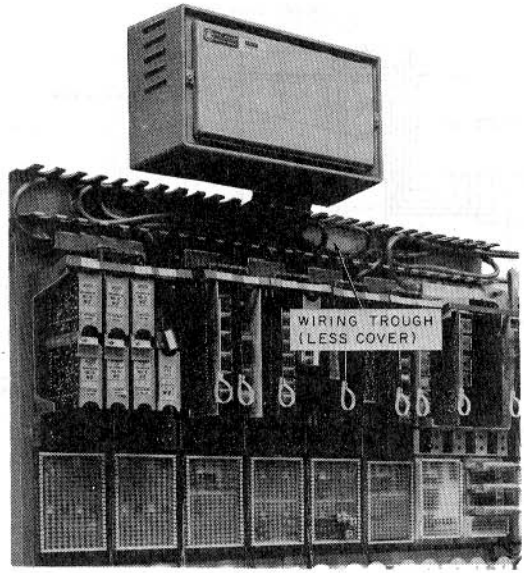

Fig. 11—Installation Using Wiring Troughs for Power Cabling

of KTS grounding and protection requirements.

3.14 ***Protection:*** It is recommended all incoming CO/PBX lines be connected to protectors. The protector ground terminal will serve as the primary KTS ground point and must be connected to the best available ground source, preferably the same as that used for the ac power service. In any case, the KTS ground source and the power service ground source should be bonded together.

3.15 ***Power Unit Circuit Ground:*** Using No. 12 gauge wire, connect the circuit ground terminal (LOC GRD) of the power unit to the protector ground terminal (paragraph 3.14), if the incoming CO/PBX lines are protected. If they are not protected, connect LOC GRD to the best available ground source.

Caution: DO NOT use sprinkler system, hot water, or gas pipes for ground.

3.16 ***Power Unit Frame Ground:*** The framework of power units should be grounded where required by local regulations. The ground may be provided as follows:

- Via the grounding conductor in the 3-conductor power cord (ordered separately) when a grounded ac receptacle is available.

- Via a No. 12 gauge wire connected from the case, framework, or chassis ground terminal (if provided) of the power unit to an electrically approved ground. The power unit circuit ground shall be associated only with the output circuit of the power unit. ***Do not strap the circuit ground to the frame or case of the power unit (Fig. 12).***

3.17 After connecting the No. 12 gauge wire for circuit ground as in paragraph 3.15 and frame ground as in paragraph 3.16, attach an E-3013B station ground tag to each ground wire.

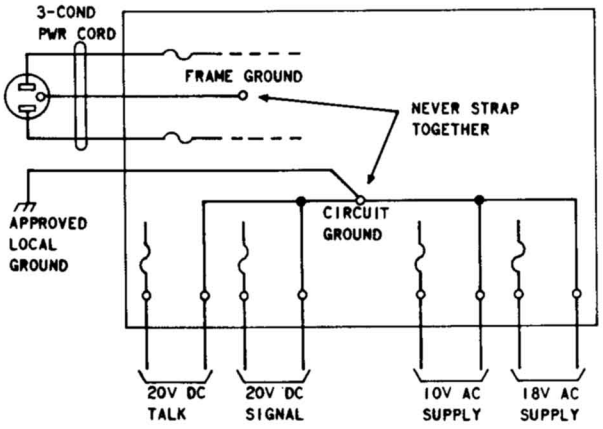

Fig. 12—Grounding of Typical KTS Installation

3.18 Where local requirements permit, the following equipment, as covered in Section 167-400-210, may be employed:

- ***Power-cord plug adapter (Hubbell BL-12433)***—when a 3-conductor ac power cord must be connected to a duplex 2-conductor ac power receptacle (Fig. 13)

- ***Power-cord plug retainer assembly (KS-19266)***—to prevent accidental removal of a power-cord plug (Fig. 13).

Caution: The ac power cord should remain disconnected from commercial ac power until completion of paragraph 3.29.

D. KTU Installation

3.19 Prior to terminating distribution of telephone set cabling, cross-connections, or panel options, selected KTUs shall be unpacked, options applied as applicable, and installed in their appropriate modular panels.

3.20 Install KTUs by inserting the plug-end of the printed wiring boards into the modular panel connectors.



Exercise care when handling and inserting plug-in KTUs to avoid damage to the printed wiring boards and other components.

3.21 Installation of a 419A KTU (Automatic Signaling, Ringdown Private Line), an 8-inch unit in a 620A-type panel, requires two 913B connectors mounted in a vertical plane and removal of a guide assembly. Connections are made to the upper quadrant of the terminal field, and the lower quadrant remains vacant (Fig. 26).

3.22 The 498A KTU (Fig. 50) provides music-on-hold for four CO/PBX lines. Three more music-on-hold circuits may be added to the 498A KTU for a total of seven circuits by connecting a 116A1 circuit module to the 498A KTU.

3.23 A 498A KTU is compatible with 400D (MD), G (MD), or H KTU. When using a 451A or B KTU to provide music-on-hold, a 400D (MD) or G KTU (MD) must be used as a line circuit,

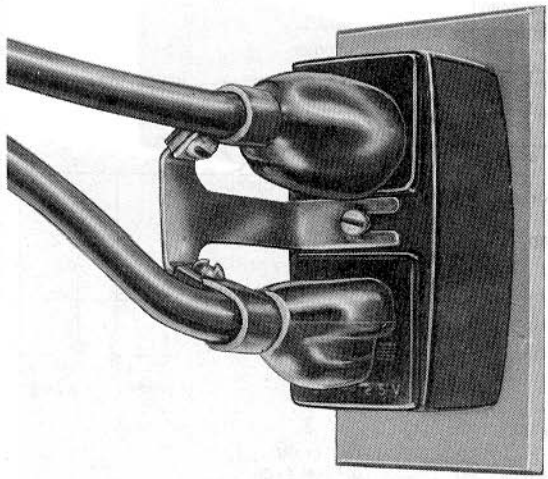

Fig. 13—Twin-Plug Retainer Mounted on a Power Cord Plug Adapter

since the 400H and the 451-type KTUs are not compatible with each other.

3.24 A 467A KTU can be installed in any connector of a 620A-type or 642A panel. The 467A monitors the -24 volt signal battery supply for a low-voltage condition. If the voltage drops below the adjustable level (factory adjusted at 19 volts), a light emitting diode (LED) on the KTU will light and remain lighted until the reset button is depressed. No external connections are required since the KTU checks the B voltage available through the power interconnect cord.

3.25 The following applies to the installation of a 641A modular panel (Fig. 30 and Table G):

- Connectors 1A and 1B are intended for an 8-inch dial intercom selector circuit (407B or 424-type KTU) or a TOUCH-TONE selector circuit (494A KTU). The 494A KTU can be used to provide basic intercom in installations having TOUCH-TONE telephone sets only. Flashing lamps, audible ringback, and busy tone cannot be provided when using a 494A KTU.

- Connectors 2A and 2B are intended primarily for an 8-inch TOUCH-TONE adapter (440A or 478B KTU) but will also accommodate a 425-type KTU. ***Add option Z to 478B KTU when installed in a 641A panel.***

Note: When a 425-type KTU is used and TOUCH-TONE service is desired, the 425-type KTU is installed in connectors 2A and 2B. The 440A or 478B KTU must then be installed in a 642A modular panel. ***Apply option Y to 478B KTU when installed in a 642A panel.***

- When audible tones (476A KTU), station busy (422-type KTU), TOUCH-TONE (440A or 478B KTU, as previously described), or other related optional features are desired, they may be added to the dial intercom system by addition of the KTUs in a 642A modular panel and cross-connected as required.

- The lower portion of the quick-connect terminal field contains terminals for station codes, assigned from left to right, R-0 to R-9, and below those terminals in a similar manner, codes R-X0 to R-X9; X indicates the selected TD code, see the following.

- When a 19-code selector (424-type KTU) is used, a transfer digit (TD) must be assigned

and cross-connected from the TD terminal in the option field to the chosen digit R(0-9) terminal in the cross-connect terminal field (Fig. 31 through 36). If a 494A KTU is used, the digit 1 is treated as the transfer digit. No strapping is required.

THINK

The TD when using a 424-type KTU may be any digit; once selected, the digit code cannot be used as a single digit code.

- When a 494A KTU is used, use 10-volt ac or -24 volt dc only as audible signal voltage. Use of 105-volt ac may result in damage to the KTU.

3.26 The following applies to installation of a 642A modular panel:

- Lamp positions in the line lamp and fuse block assembly are assigned to a related connector and are unequipped, except when locally provided at time of installation for use with a 417A, 418A, or 428A KTU.

Note: When a KTU is removed from service in the 642A modular panel, its related lamp, if provided, must be removed to prevent possible damage should another type KTU inadvertently be placed in the connector.

- Appropriate KTU features may be cross-connected to other quadrants, either within the panel or to other panels, if interrelating of features is desired.

- Alphanumeric fanning strip designations are repeated for each quadrant to aid in locating and identifying terminals. (See Fig. 39 for terminal designations and connector pin identification and refer to Table A for appropriate KTU connection figure.)

- Installation of a 440A or 478B KTU, an 8-inch unit, requires the removal of a guide assembly and connection through the lower 914B connector while occupying the space of two connectors in a vertical plane. Apply option Y to the 478B KTU.

3.27 Covers are available (Table D) for protecting the fronts and sides of modular panels. To mount a front cover (151A or 152A) on a panel, engage the hooks on the top edge with the slots at the top of the panel. Cover the sides by attaching end cap covers (153A) to the front covers with the clips supplied. Where several panels are mounted next to each other, the front covers form a continuous surface, and only two end cap covers are installed at the extreme sides.

E. Applying Power

Warning: 105 volts is present on the 105-volt 30-Hz RN terminals of the 620A-type and 641A panel terminal fields when power is applied.

3.28 Put a C clip terminal insulator over the 105-volt 30-Hz RN terminals on the 620A-type and 641A panels (Fig. 14 and 30). One clip will cover the 105-volt terminal and the adjacent RN terminal.

3.29 Select appropriate length 3-conductor ac power cord and insert first into the power unit, and second into the commercial ac power receptacle. Excess length cord should be coiled, tied, and stored neatly.

3.30 If abnormal commercial ac input voltage is suspected:

(1) ***Remove the ac power cord from the ac receptacle.***

(2) Using an ac voltmeter, determine the ac voltage potential of the commercial ac receptacle.

(3) Move the ac voltage adjustment lead to that voltage tap nearest the actual line voltage.

Note: The power units are furnished with the adjustment lead connected to the 117-volt tap. With this connection, the unit will perform satisfactorily for line voltage between 111 and 123 volts.

(4) Reconnect power cord to receptacle.

3.31 If desired, limited testing of KTUs may be made prior to placing station cabling or cross-connections. Apply commercial ac power and test as appropriate (see TESTING, paragraphs 5.05 and 5.06).

TABLE G

DIAL INTERCOM OPTIONS

FEATURE (Note 1)			OPTION
Selector Circuit	10 or 19 Codes	Non TOUCH-TONE	Z
		TOUCH-TONE	N
	10 Codes	TOUCH-TONE or Non TOUCH-TONE	F
Station Busy			ZF*
Audible Ringback			ZE*
Dial Tone			ZD*
Long Line Circuit			Q
Lamp Signal	Steady		W
	Flashing	10 Codes	H
		19 Codes	V†
Audible Signal	Interrupted (Note 2)	10V AC Buzzer	E
		110V 30-Hz Ringer	X
	Single Spurt (Note 3)	10V AC Buzzer	G
		110V 30-Hz Ringer	M
		18V AC Buzzer	J
		DC Buzzer	K

Note 1: Per SD-69567-01, Issue 14.

Note 2: 425B KTU required.

Note 3: Not to be used with station busy tone feature (422A and 476A KTUs).

* Appear on KTU option block.

† No strapping. Requires removal of H option strap.

4. CONNECTIONS

4.01 Connection figures are grouped according to the types of services offered: CO/PBX and Private Lines, Dial Intercom, and Miscellaneous.

4.02 Preceding the 620A-type and 642A modular panel connections are typical terminal field illustrations of those panels showing the upper left-hand quadrant (1A) of the quick-connect field as an example of all its quadrants (Fig. 14 and 39).

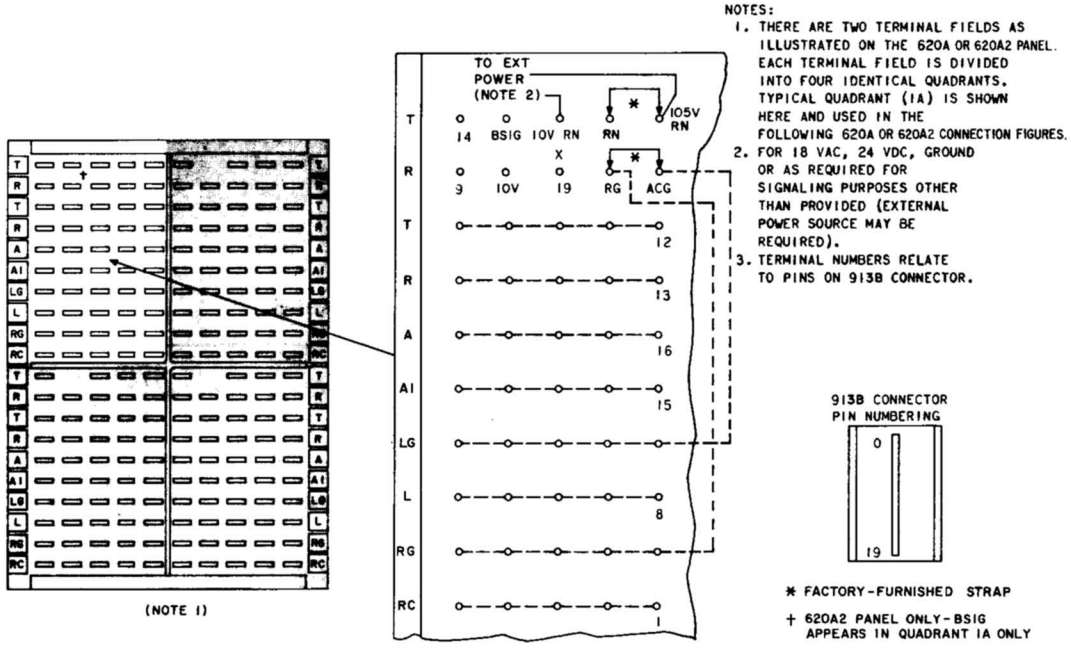

Fig. 14—◆Terminal Field Illustration and Terminal Designations for 620A (MD) or 620A2 Modular Panel (CO/PBX and Private Line Services)◆

4.03 The 641A modular panel terminal field is illustrated in its entirety (Fig. 30).

4.04 Typical terminal field illustrations provide terminal and option field locations, terminal designations, connector-pin identification, and factory-furnished wiring and straps.

4.05 Connections are applied to the quick-connect terminals of the modular panels through use of the 714B tool, or equivalent.

4.06 Each quick-connect terminal is limited to termination of a single lead. Terminations in excess of panel terminal field capacity may be applied in any of the following methods most appropriate:

- ***Continuous strapping (looping)***—single leads common to more than one terminal.
- ***183A2 adapter***—provides two additional common terminals and is applied atop two terminals of like-designations in a horizontal plane.
- ***183B2 adapter***—provides two additional, but separate, terminals and is applied atop two terminals in a vertical plane.
- ***16A1-160 terminal block***—for additional line service terminations in excess of 620A-type or 642A panel capacity (Fig. 9).
- ***66B4-25 connecting block on a 184A1, B1, or B2 (RED) backboard***—for additional line service terminations in excess of 620A-type or 642A panel capacity (Fig. 10).
- ***66B3-50 or 66B4-25 connecting block on a 185A1 (YELLOW) backboard***—for additional dial intercom terminations in excess of 641A panel capacity (Fig. 8).

4.07 The 620A (MD) or 620A2 modular panel fanning strips are predesignated for typical line services and repeated for each quadrant (Fig. 14). Exceptions to the designations are the following:

- 401-type KTU—spare leads SP-1, SP-2, and SP-3 are substituted for T, R, and RC, respectively (Fig. 21).
- 413A KTU—spare leads SP-1, SP-2, SP-3, and SP-4 are substituted for T, R, A, and L, respectively (Fig. 22).
- 414A, 461A, and 416A KTUs—S and SG leads are substituted for A and A1, respectively (Fig. 23 and 25).
- 471-type and 479-type KTUs—A(U) and A leads are substituted for A and RC, respectively (Fig. 28 and 29).

4.08 The KTU options: Apply to optional features offered by individual KTUs; they are indicated in table form on their connection figures only.

4.09 Intercom options (Table G): Wiring of associated KTUs providing features directly affecting or adding to the dial intercom system.



Many KTU and intercom system options share like-designations and provide similar optional features, but several similarly-lettered options differ in features they provide in the two applications. Consult appropriate KTU or intercom option table for desired feature prior to applying any options.

CONNECTION INDEX

4.10 Table A provides an index to KTU connection figures and associated KTU tests. Other related figures and tables are as follows:

Fig. 14—Terminal Field Illustration and Terminal Designations for 620A (MD) or 620A2 Modular Panel (CO/PBX and Private Line Services)

Fig. 30—Terminal Field Illustration and Terminal Designations for 641A Modular Panel (Dial Intercom Services)

Fig. 39—Terminal Field Illustration and Terminal Designations for 642A Modular Panel (Miscellaneous Services)

Table H—Dial Intercom Arrangements (Fig. 31 through 36).

TABLE H

DIAL INTERCOM ARRANGEMENTS

DIAL INTERCOM FEATURE		KTU	FIGURE								
			31		32	33		34		35	36
			BASIC			DELUXE					
						WITHOUT STATION BUSY OPTION				WITH STATION BUSY OPTION	
			R	TT	TT	R	TT	R	TT	R	TT
Selector Codes	10	407	•	•		•	•	•	•	•	•
	19	424									
TOUCH-TONE Selector	19	494			•						
Dialing	R	†	†			†		†		†	
	TT	440/478		•			•		•		•
Station Busy Selector		422								•	•
Audible Tones		476						•	•	•	•
Flashing Lamps*		425				•	•	•	•	•	•

* Interrupter required with flashing lamps.

† No KTU required.

• Indicated KTU required.

5. MAINTENANCE

5.01 Maintenance of 600-series modular panels can be done in the areas of:

- Checks of terminal field cross-connections
- Replacement of defective fuses, lamps, and KTUs.

Continuity Diagrams

- Continuity testing power interconnect terminals and cable connectors, etc. Consult Table F and Fig. 1 through 4.
- Continuity testing (913-/914-type connectors to 66-type terminal connections). Consult Fig. 15, 16, and 17.

5.02 As a KTS, maintenance is limited to normal station repairs, wiring checks, and replacement of defective components.

5.03 When trouble is encountered, ***first perform a thorough check of all cross-connections and, second, assure all station connections and related apparatus are properly applied;*** then the following checks are

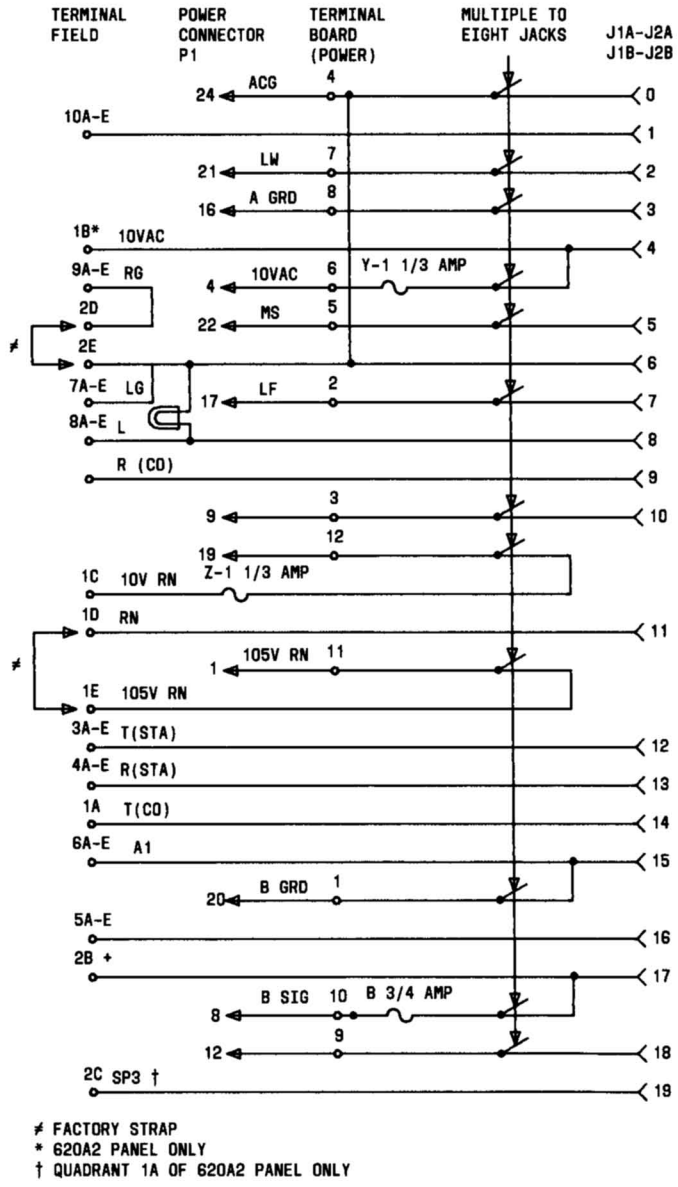

≠ FACTORY STRAP
* 620A2 PANEL ONLY
† QUADRANT 1A OF 620A2 PANEL ONLY

Fig. 15—620A (MD) or 620A2 Modular Panel Maintenance Diagram

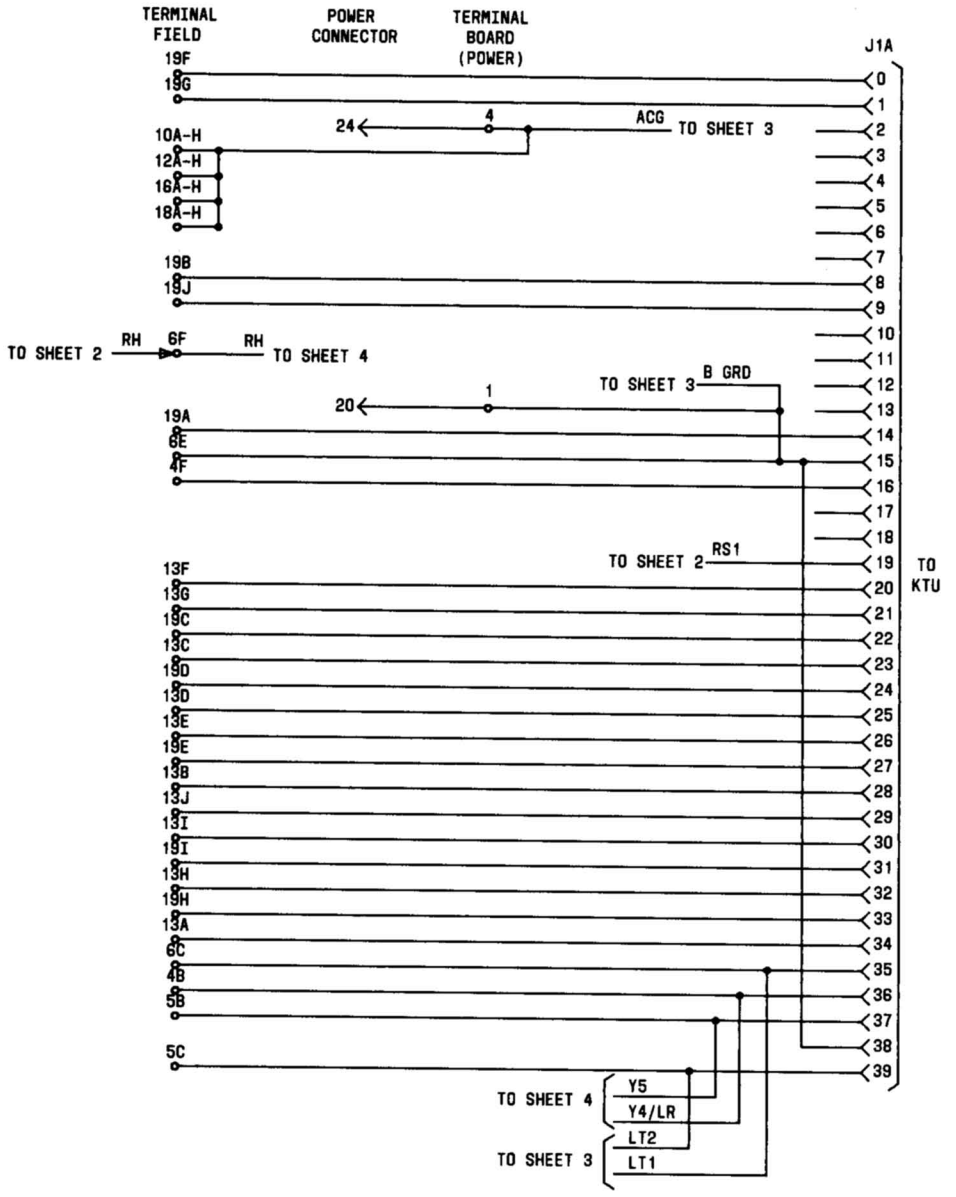

Fig. 16—◗641A Panel Maintenance Diagram (Sheet 1 of 4)◖

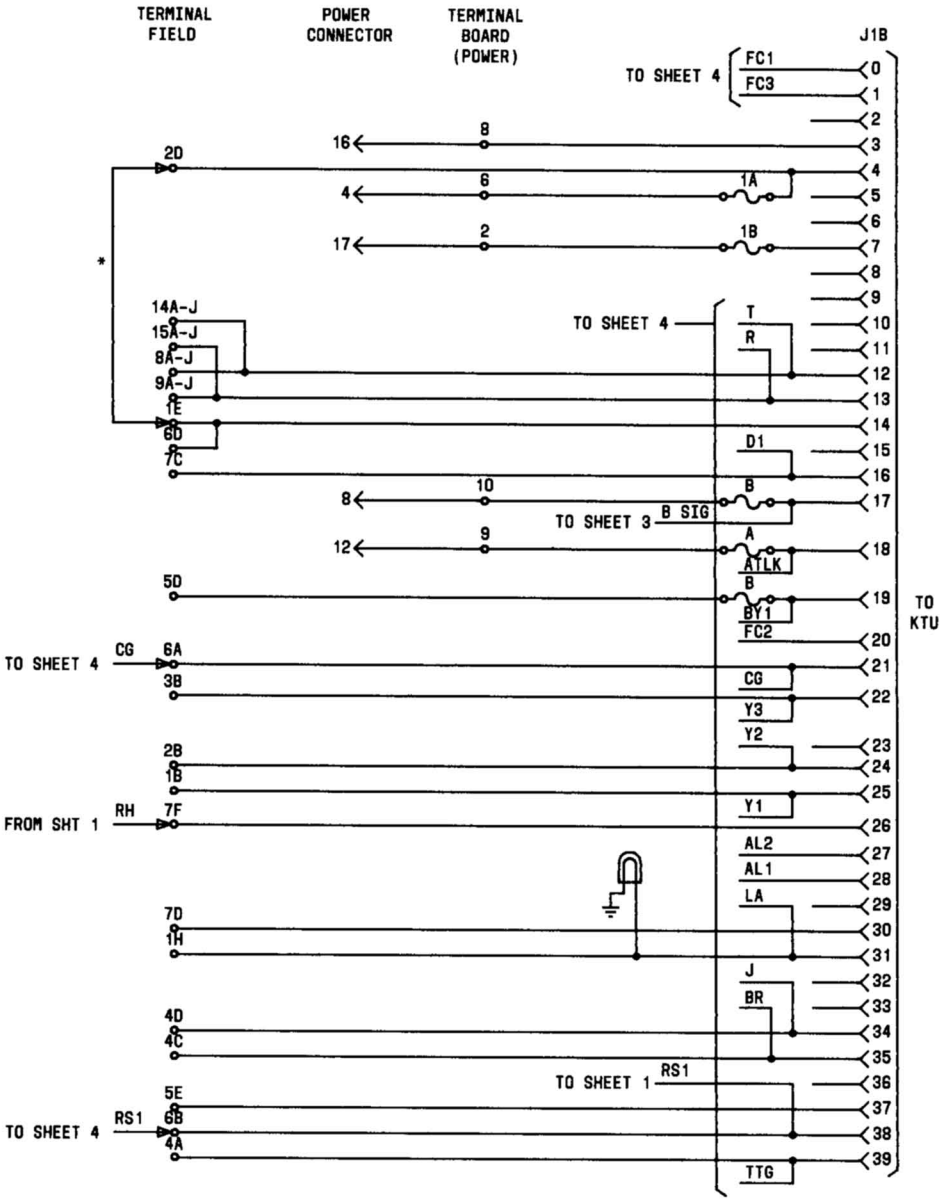

Fig. 16—◊641A Panel Maintenance Diagram (Sheet 2 of 4)◊

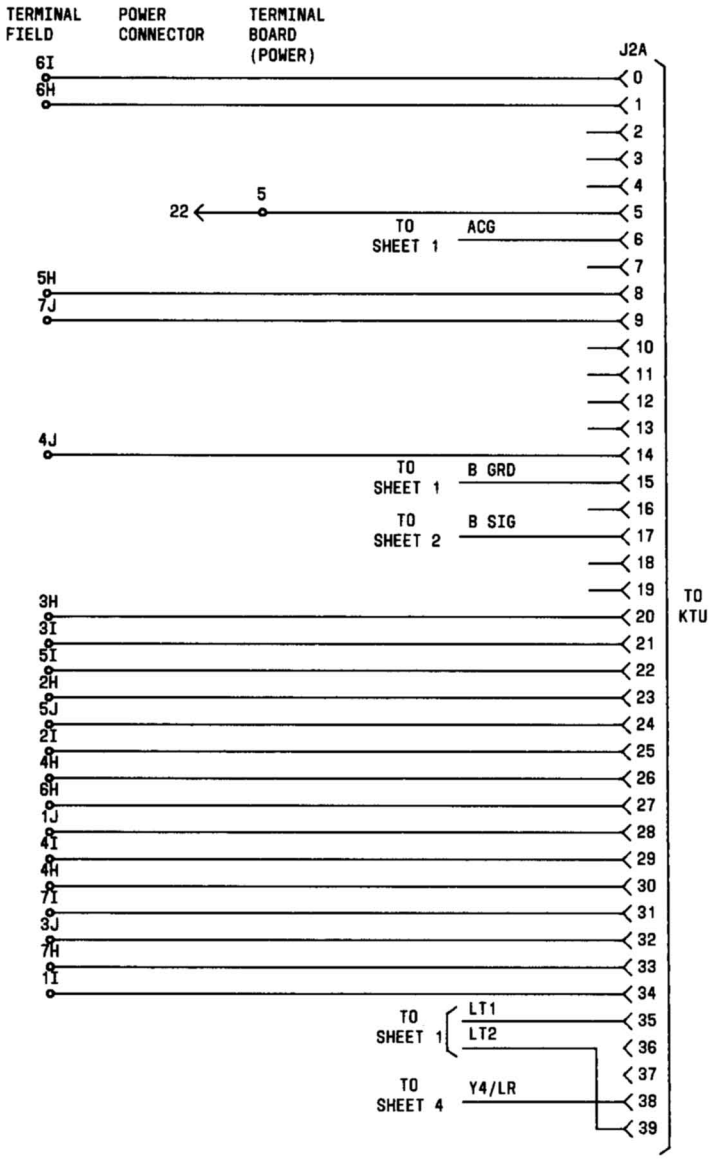

Fig. 16—◆641A Panel Maintenance Diagram (Sheet 3 of 4)◆

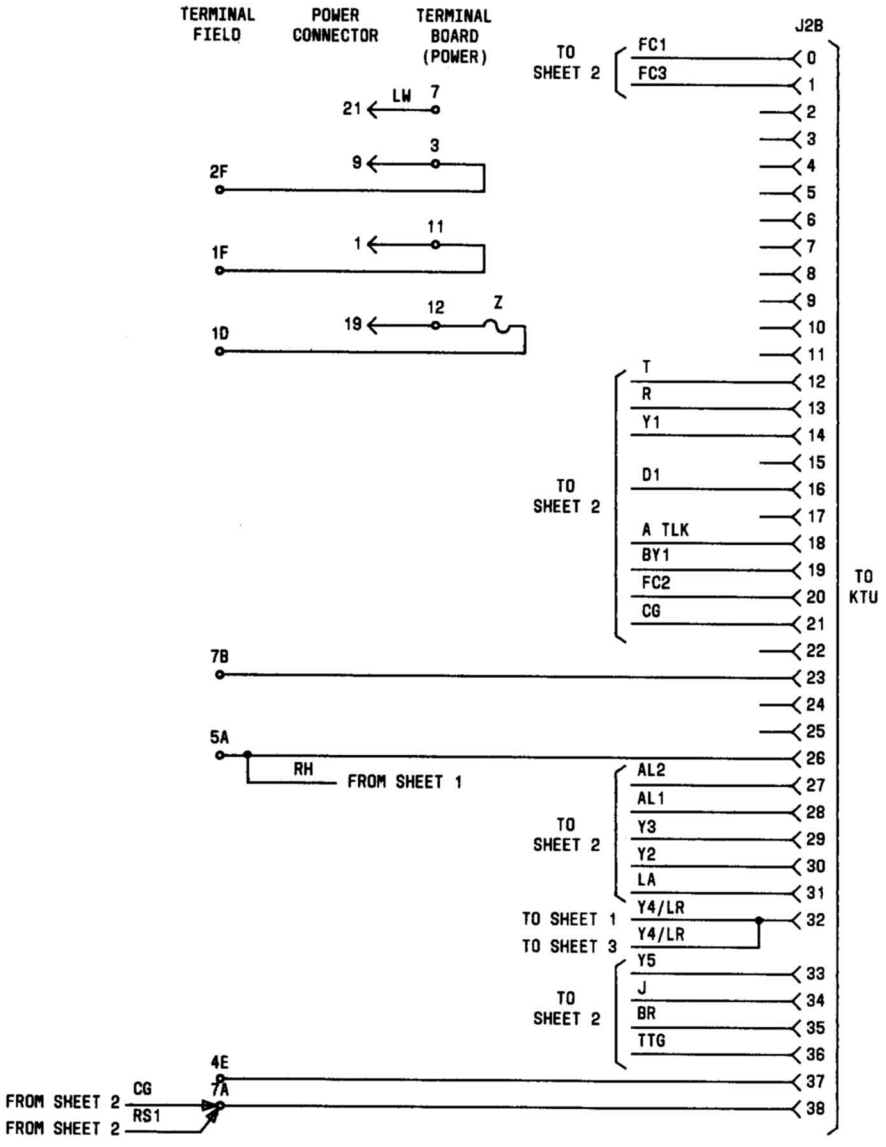

Fig. 16—◊641A Panel Maintenance Diagram (Sheet 4 of 4)◊

JK	CONN BLK QUADRANT
1A	1A
1B	1B
2A	2A
2B	2B

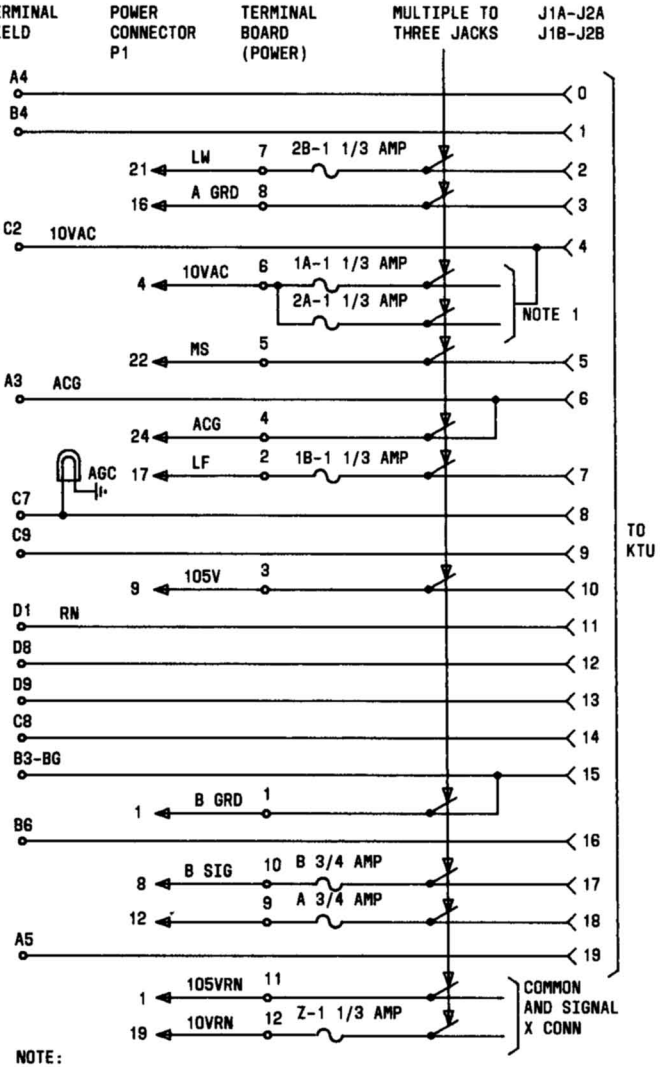

Fig. 17—▮642A Panel Maintenance Diagram (Sheet 1 of 2)▮

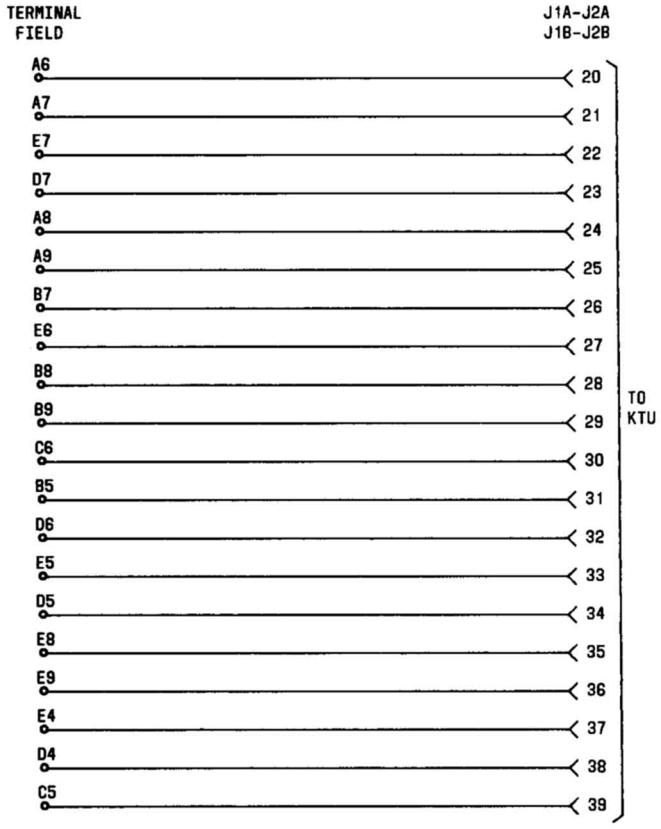

Fig. 17—◆642A Panel Maintenance Diagram (Sheet 2 of 2)◆

suggested before replacement of a KTU, modular panel, or power unit is considered:

Caution: Several of the following checks require testing live potentials at the modular panel connectors and power interconnect terminal field. Closeness of these terminals to each other requires extra care be taken to avoid shorting or otherwise damaging them.

KTUs

- Securely placed in proper connectors.
- Properly strapped for required option(s). (See appropriate KTU connection figures.)
- Replace suspected KTU with one known to be in good working order to determine whether trouble is in the KTU or external to it [be sure to strap in the correct option(s) on the replacement KTU, as applicable].
- Should the replacement KTU not clear the trouble, the trouble is external to it and the original KTU should be placed back in service.

MODULAR PANELS (Check as Applicable)

- Option straps(s) properly applied.

- Fuses in place and in good working condition (Fig. 5).
- Lamps in place and in good condition.
- Plug end of modular panel power interconnect cable securely positioned in power unit connector.
- KTUs securely mounted in 913-/914-type connectors with retainer and/or guide assemblies in place.
- Dedicated leads (Table F) may be tested for appropriate potential or function.

Caution: Power interconnect cable must be disconnected and modular panel void of KTUs prior to attempting the following test.

- Dedicated leads (Table F) may be continuity tested between the KTU connectors within a given panel.
- Using the appropriate modular panel terminal field illustration (Fig. 14, 30, or 39), continuity tests of the nondedicated wiring may be made between the KTU connectors and the terminal field.
- Continuity testing of power unit interconnect cable leads may be performed.

POWER UNIT (Fig. 6)

- All fuses in place and in good condition.
- The ac power cord securely in place in both the commercial ac receptacle and the power unit input connector.
- Commercial ac input present at receptacle and not controlled by a switch.
- Interrupter securely in place and operative. Place ground on start lead (MS) pin at power interconnect cable terminal field of modular panel (Fig. 1) and, using 1013A test set or equivalent, test for interrupted potentials on the LW, LF, 10-volt ac RN, and 105-volt RN terminals in the modular panel power interconnect field. The LW does not appear on the 641A panel. Remove MS ground when check is completed.
- Using 1013A test set, or equivalent, verify that battery, ground, and signal potentials are present at output taps on the face of the power unit panel.
- Circuit and frame grounds properly applied (paragraphs 3.15 and 3.16).
- The ac voltage adjustment lead on appropriate tap.

5.04 If the previous checks fail to reveal the source of trouble, it can be reasonably assumed the trouble is external to the power units, modular panels, and KTUs, and cross-connections, station wiring, and components should be checked.

TESTING

5.05 Prior to termination of cross-connections, station and distributing cabling, continuity testing may be performed between terminal field terminals and like-designated connector pins. See appropriate terminal field illustration.

Caution: Power unit connector cable must be disconnected and modular panel void of KTUs before attempting continuity tests.

5.06 The line lamp or circuit busy lamp (641A panel), provided in the lamp and fuse block assembly, offers a visual indication of a circuit under operational test.

TESTS

5.07 It is impractical to attempt operational tests of several KTUs prior to termination of appropriate cross-connections. The following KTUs may be tested at the modular panel regardless of cross-connections, station or distributing cables applied. The tests appear adjacent to the related KTU connection figures. (All circuits must be idle prior to starting tests.) The tests are:

A. 400-Type KTU—CO/PBX Line Circuit

B. 401-Type KTU—Manual Intercom Circuit

C. 414A KTU and 461A KTU—Manual Signaling, Ringdown Private Line

D. 415-Type KTU—Automatic, DC Signaling, Ringdown Private Line

E. 416A KTU—Station Line Circuit

F. 419A KTU—Automatic Signaling, Ringdown Private Line

G. 469A KTU—Lamp Extender

H. 471-Type KTU—Battery Reversal Toll Restriction

I. 407- or 424-Type KTU—Basic Dial Intercom Selector Circuit

J. 494A KTU—TOUCH-TONE Selector Circuit

K. 420A KTU—Long Line Circuit

L. 417A KTU—Add-On Conference Circuit

M. 418A KTU—Short Range, DC Signaling Private Line

N. 451B or 498A KTU—Music-On-Hold Circuit

O. ♦452A KTU—Power Failure Ringing Circuit♦

5.08 ***Lettered Steps:*** A letter a, b, c, etc, added to a step number in Part 5 of this section indicates an action which may or may not be required depending on local conditions. The condition under which a lettered step or a series of lettered steps should be made is given in the ACTION column, and all steps governed by the same condition are designated by the same letter within a test. Where a condition does not apply, all steps designated by that letter should be omitted.

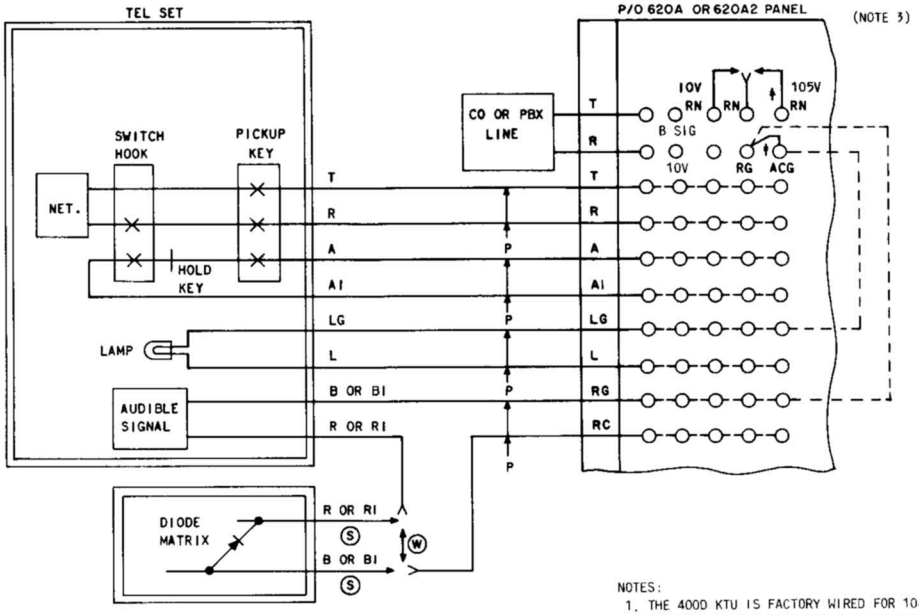

OPTION STRAPPING (SEE NOTE 1)

FEATURES				KTU OPTION	OPTION STRAPPING ON	
					MODULAR PANEL CONN BLK	400D KTU
AUDIBLE SIGNALS	INTERRUPTED	WITHOUT DIODE MATRIX CONTROL	10V AC	W	10 RN TO RN	5 TO 8
			105V AC		105V RN TO RN	
		WITH DIODE MATRIX CONTROL	10V AC	S	10 RN TO RN	
			105V AC		105V RN TO RN	
VISUAL HOLD CIRCUIT		LAMP WINK		Y		7 TO 10,
		LAMP STEADY		X		7 TO 9,
RING TIMEOUT		SHORT TIME DELAY (10 SECONDS)		Z *		1 TO 2,
		LONG TIME DELAY (30 SECONDS)		†	†	
RELEASE OF HOLDING BRIDGE FROM CO OR PBX LINE CURRENT OPENS GREATER THAN		500 MILLISECONDS WHEN ASSOCIATED WITH NO.1 ESS HAVING RESWITCH CAPABILITY		ZC	2 TO 3 USING 601A (5 UF) CAPACITOR OR EQUIVALENT §	
		100 MILLISECONDS WHEN ASSOCIATED WITH 800A PBX AND/OR NO.5 X-BAR CENTREX NOT HAVING AUTOMATIC PERMANENT SIGNAL RELEASE		ZD (NOTE 2)	2 TO 3 USING 575C (1 UF) CAPACITOR OR EQUIVALENT	
		50 MILLISECONDS WHEN ASSOCIATED WITH NO.5 X-BAR CENTREX HAVING AUTOMATIC PERMANENT SIGNAL RELEASE		ZJ	2 TO 3 USING 575B (0.5 UF) CAPACITOR OR EQUIVALENT	

NOTES:
1. THE 400D KTU IS FACTORY WIRED FOR 10-SECOND TIMEOUT, PLUS WINKING-HOLD LAMP, AND W AND S WIRING OPTIONS.
2. ZD OPTION IS REPLACED BY ZJ OPTION, HOWEVER, IT IS NOT NECESSARY TO UPDATE CIRCUITS PREVIOUSLY MODIFIED WITH OPTION ZD.
3. ON 620 A2 PANELS, 10 VAC OR B SIG CAN BE CONNECTED ON TERMINAL FIELD TO OPERATE AUDIBLE SIGNALS. 10 VAC APPEARS IN ALL 8 QUADRANTS AND B SIG APPEARS IN 1A ONLY.

* TO PROVIDE TIME-OUT CYCLES OF RING-UP CIRCUITS FROM 3.4 TO 7.5 SECONDS. INSTALL KS-13490 L1, 1-WATT OR EQUIVALENT RESISTOR BETWEEN TERMINALS 1 AND 3 WITH A STRAP FROM 1 TO 2. TIME-OUT CYCLE AND RESISTOR VALUES ARE AS FOLLOWS:
3.4 SECONDS – 0.20 MEGOHM RESISTOR
5.0 SECONDS – 0.39 MEGOHM RESISTOR
6.7 SECONDS – 0.75 MEGOHM RESISTOR
7.5 SECONDS – 1.2 MEGOHM RESISTOR
WHEN THE DURATION OF MACHINE RINGING IS 1 SECOND OR LESS, TIME-OUT SHALL NOT BE REDUCED BELOW 5 SECONDS.

† FOR 30 SECOND TIME-OUT CYCLE REMOVE ALL STRAPS FROM TERMINALS 1, 2, AND 3.

‡ FACTORY-FURNISHED STRAPS

§ INSTALL POLARIZED CAPACITOR AS FOLLOWS:



Fig. 18—400D KTU (MD) Connections (CO/PBX Line) in 620A (MD) or 620A2 Modular Panel

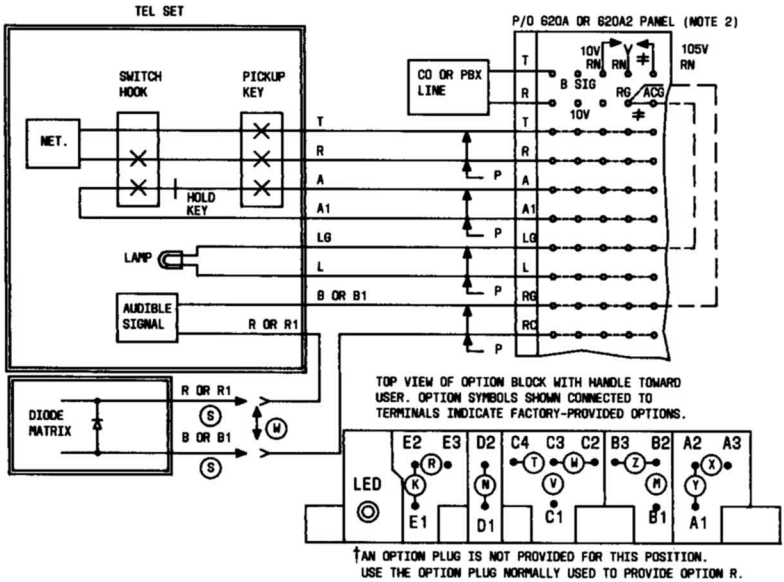

OPTION		FEATURE		CONNECT TERMINALS
M	RING TIMEOUT	LONG TIME DELAY (APPROXIMATELY 20 SECONDS)		B1-B2
Z		SHORT TIME DELAY (APPROXIMATELY 5.75 SECONDS)		B2-B3‡
Y	VISUAL HOLD CKT	LAMP WINK		A1-A2‡
X		LAMP STEADY		A2-A3‡
W	AUDIBLE SIGNAL	INTERRUPTED RING		C2-C3‡
T		STEADY RING		C3-C4
S		COMMON WITH DIODE MATRIX CONTROL		C1-C3
V		COMMON WITH RELAY CONTROL		C1-C3
R	DELAYED HOLD RELEASE	RELEASE OF HOLDING BRIDGE FROM CO OR PBX BY LINE CURRENT OPENS	MINIMUM OF 25 MS	E2-E3
K			600 MS	E1-E2

‡DENOTES FACTORY PROVIDED OPTIONS

NOTES:
1. DO NOT CONNECT RINGING VOLTAGE THROUGH TERMINAL 10 WHEN N OPTION IS PROVIDED
2. ON 620A2 PANELS, 10V AC OR B SIG CAN BE CONNECTED ON TERMINAL FIELD TO OPERATE AUDIBLE SIGNALS. 10V AC APPEARS IN ALL B QUADRANTS AND B SIG APPEARS IN 1A ONLY.

Fig. 19—400G KTU (MD) Connections (CO/PBX Line) in 620A (MD) or 620A2 Modular Panel

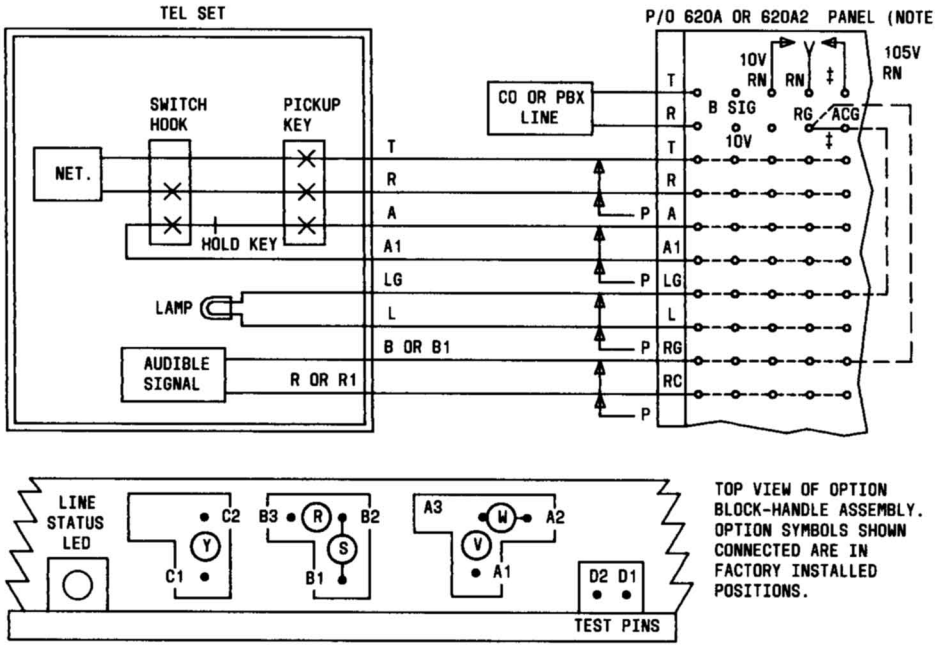

OPTIONS

OPT	FEATURES		
T*	CO OR PBX LINE CIRCUIT		
W*	AUDIBLE SIGNAL	INTERRUPTED RING	
V		COMMON AUDIBLE WITH GROUND FOR RELAY CONTROL	
S*	HOLD CIRCUIT RELEASE	LONG HOLD ABANDON TIMEOUT (FOR ESS #1, ESS #2, 812 PBX, 770 PBX, DIMENSION PBX)	
R		SHORT HOLD ABANDON (FOR ALL OTHERS)	
Y †	TIMEOUT	WITH	14 SECONDS
		WITHOUT	6 SECONDS

*FACTORY INSTALLED
†OPTION PLUG IS NOT PROVIDED. USE KS-21290L7, OPTION PLUG COMCODE 841 732 613

NOTE:
ON 620A2 PANELS, 10V AC OR B SIG CAN BE CONNECTED TO TERMINAL FIELD TO OPERATE AUDIBLE SIGNALS. 10V AC APPEARS IN ALL 8 QUADRANTS AND B SIG APPEARS IN 1A ONLY.

Fig. 20—♦400H KTU Connections (CO/PBX Line) in 620A (MD) or 620A2 Modular Panel♦

A. 400-Type KTU—CO/PBX Line Circuit (Fig. 18, 19, and 20)

STEP	ACTION	VERIFICATION
1	Short A and A1 terminals.	Panel lamp lights steadily (BUSY).
2a	If CO/PBX T and R battery is present— Maintaining A and A1 short, short T and R (STA) terminals.	
3a	Remove A and A1 short.	Panel lamp winks.
4a	Reapply A and A1 short.	Panel lamp lights steadily.
5a	Remove T and R short.	
6	Remove A and A1 short.	Panel lamp extinguished.
7b	If interrupter is operating (another line in system in use and working from same power unit as line under test)— Place E1 ringer, or equivalent, across T and R (STA).	
8b	Place straps RG to T (CO) and 105V RN to R (CO).	Panel lamp flashes (CALL). Ringer sounds.
9	Remove straps 105V RN to R (CO) and RG to T (CO)	Panel lamp continues to flash. Ringer continues (Time-out circuit operating until . . .) Panel lamp extinguishes. Ringer silences. (Time-out complete.)
10b	Remove ringer from T and R (STA).	(END TEST)

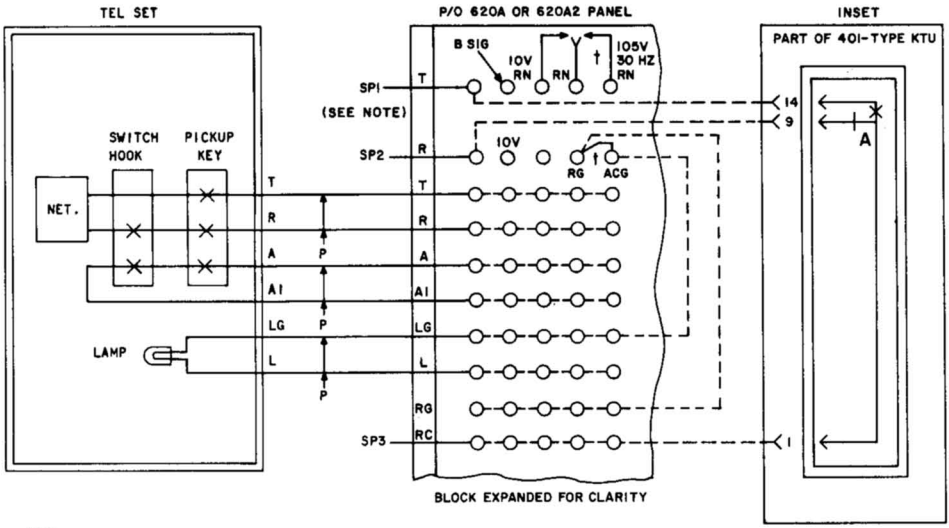

NOTE:
SP1, SP2, AND SP3 LEADS CAN BE USED FOR CONTROL PURPOSES AS REQUIRED (SEE INSET). ON 620A2 PANELS, 10V AC OR B SIG CAN BE CONNECTED ON TERMINAL FIELD TO OPERATE AUDIBLE SIGNAL. 10V AC TERMINAL APPEARS IN ALL EIGHT QUADRANTS - B SIG APPEARS IN 1A ONLY.

Fig. 21—401-Type KTU (Manual Intercom Circuit) in 620A (MD) or 620A2 Modular Panel

B. 401-Type KTU—Manual Intercom Circuit (Fig. 21)

STEP	ACTION	VERIFICATION
1	Place 1013A, or equivalent, test set (MONITOR) across T and R (STA) terminals.	
2	Put test key in TALK position.	Sidetone heard.
3	Put test key in MONITOR position.	Sidetone lost.
4	Apply A and A1 short.	Panel lamp lights steadily.
5	Remove A and A1 short.	Panel lamp extinguished.
6	Remove test set from terminals.	(END TEST)

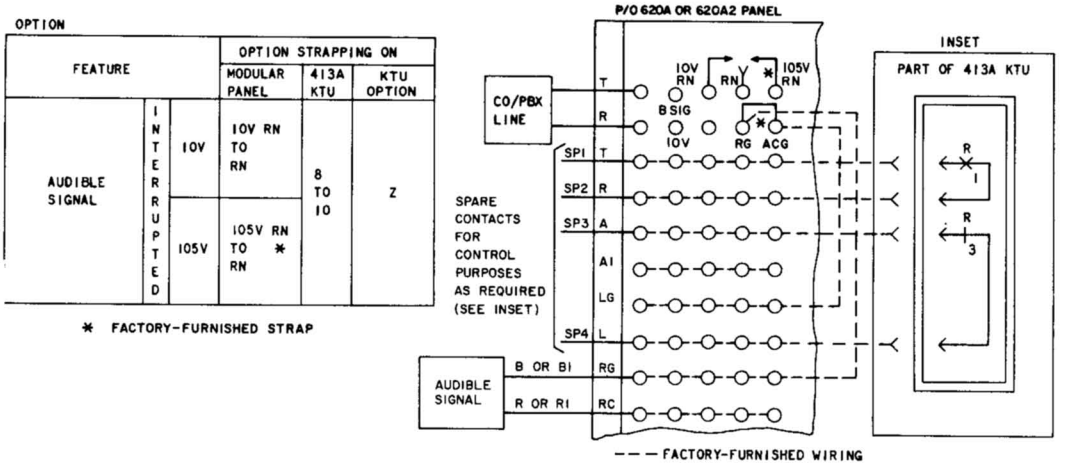

Fig. 22—413A KTU Connections (Auxiliary Ringup) in 620A (MD) or 620A2 Modular Panel

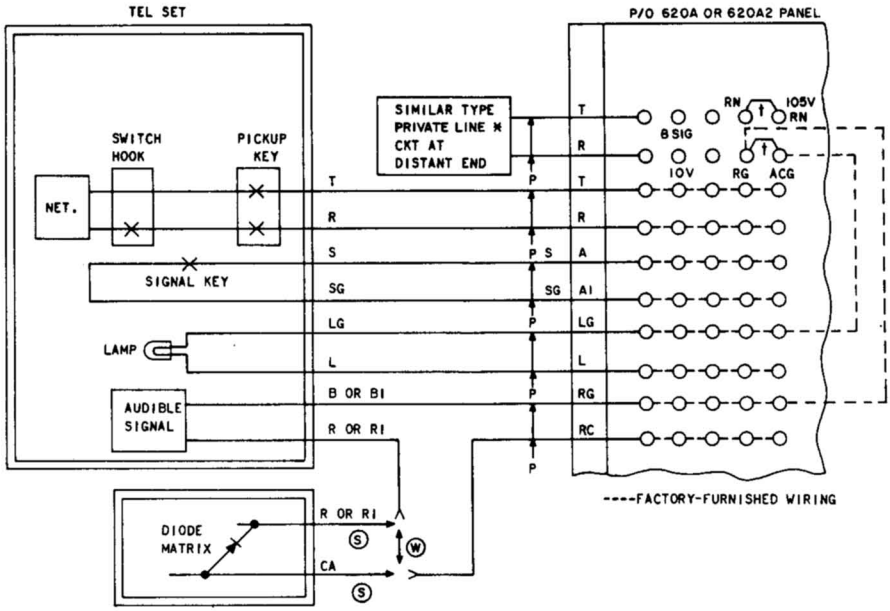

OPTIONS

FEATURES				OPTION STRAPPING ON		KTU OPTION
				MODULAR PANEL	414A OR 461A KTU	
AUDIBLE SIGNALS	UNDER CONTROL OF TIME-OUT CIRCUIT (B RELAY)	INTERRUPTED	WITHOUT DIODE MATRIX CONTROL	105V	105V RN TO RN	7 TO 8	W†
			WITH DIODE MATRIX CONTROL				S†
TIME-OUT	10 SECONDS					1 TO 2	X
	16 SECONDS					2 TO 3	Z
	23 SECONDS					REMOVE X OR Z STRAPS	WITH OUT X OR Z
AUDIBLE RINGBACK TONE						9 TO 10	M

* CIRCUIT AT DISTANT END MAY BE A 414A KTU, 419A KTU, 461A KTU, OR ANY OTHER TYPE PRIVATE LINE UNIT WHOSE RINGUP CIRCUIT REQUIRES RINGING VOLTAGE AND WHOSE SIGNALING CIRCUIT SENDS OUT SIGNALING VOLTAGE.

† FACTORY-FURNISHED STRAP

Fig. 23—414A KTU and 461A KTU Connections (Manual Signaling, Ringdown Private Line) in 620A (MD) or 620A2 Modular Panel

C. 414A KTU and 461A KTU—Manual Signaling, Ringdown Private Line (Fig. 23)

STEP	ACTION	VERIFICATION
1	Place E1 ringer or equivalent across T and R (DISTANT END).	
2	Place 1013A, or equivalent, test set (MONITOR) across T and R (STA) terminals.	
3	Put test key in TALK position.	Sidetone heard; Panel lamp lights steadily.
4	Apply S and SG (A and A1) short.	Ringer sounds (interrupted).
5	Remove S and SG short.	Ringer silenced.
6	Put test key in MONITOR position.	Sidetone lost; Panel lamp extinguished.
7	Remove test set from terminals.	
8	Remove ringer.	(END TEST)

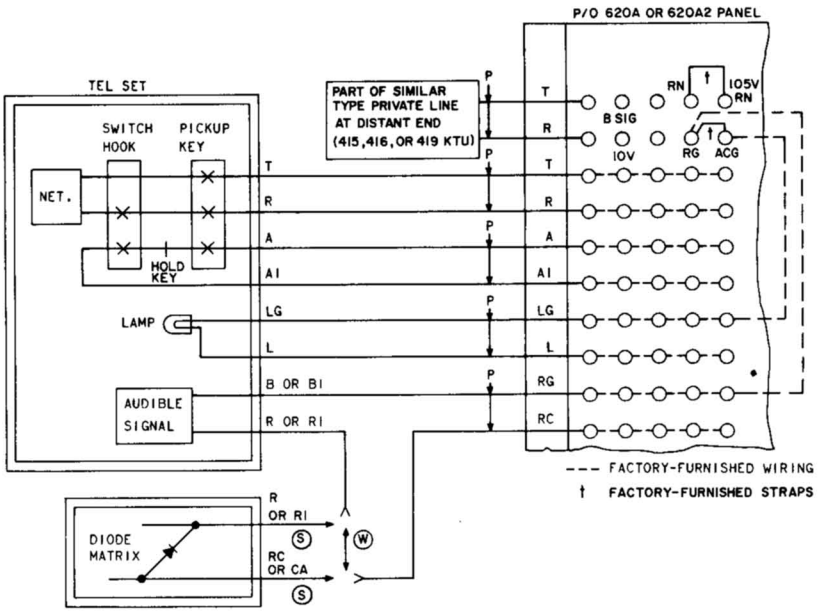

OPTIONS *

FEATURES				OPTION STRAPPING ON		KTU OPTION
				MODULAR PANEL CONN BLOCK	415A KTU	
AUDIBLE SIGNALS	INTERRUPTED	WITHOUT DIODE MATRIX CONTROL	105V	105V RN TO RN	4 TO 6	W†
		WITH DIODE MATRIX CONTROL				S†
AUDIBLE RINGBACK TONE					1 TO 2	M†
VISUAL HOLD SIGNAL					7 TO 8	Y†

* FOR IDLE LINE TERMINATION CONNECT A KS-13490L1 910-OHM RESISTOR IN SERIES WITH A 542F, 2UF CAPACITOR ACROSS TERMINALS 9 AND 10. ORDER COMPONENTS LOCALLY AND INSTALL.

Fig. 24—415-Type KTU Connections (Automatic, DC Signaling, Ringdown Private Line) in 620A (MD) or 620A2 Modular Panel

D. 415-Type KTU—Automatic, DC Signaling, Ringdown Private Line (Fig. 24)

STEP	ACTION	VERIFICATION
1	Place 1013A, or equivalent, test set (MONITOR) across T and R (STA) terminals.	
2	Put test key in TALK position.	Sidetone heard.
3	Put test key in MONITOR position.	Sidetone lost.
4	Remove test set from terminals.	
5	Place test set across T and R (DISTANT END) terminals.	
6	Put test key in TALK position.	
7	Apply A and A1 short.	Sidetone heard; Panel lamp lights steadily.
8	Remove A and A1 short.	Sidetone lost; Panel lamp extinguished.
9	Remove test set from terminals.	(END TEST)

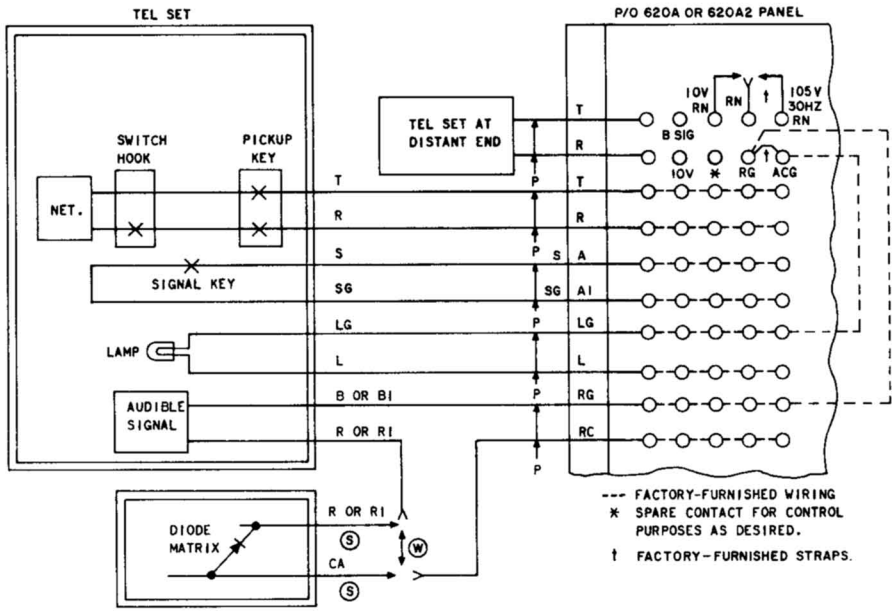

OPTIONS

FEATURES				OPTION STRAPPING ON: MODULAR PANEL	OPTION STRAPPING ON: 416A KTU	KTU OPTION
AUDIBLE SIGNALS	INTERRUPTED	WITHOUT DIODE MATRIX CONTROL	10V	10V RN TO RN	5 TO 8	W†
			105V	105V RN TO RN		
		WITH DIODE MATRIX CONTROL	10V	10V RN TO RN		S†
			105V	105V RN TO RN		
AUDIBLE RINGBACK TONE					9 TO 10	M†

Fig. 25—416A KTU Connections (Station Line Circuit) in 620A (MD) or 620A2 Modular Panel

E. 416A KTU—Station Line Circuit (Fig. 25)

STEP	ACTION	VERIFICATION
1	Place ringer across RG and RC terminals.	
2	Place 1013A, or equivalent, test set (MONITOR) across T and R (DISTANT END) terminals.	
3	Put test key in TALK position.	Sidetone heard; Panel lamp (STA) flashes; Ringer sounds (interrupted).
4	Apply T and R (STA) short.	Momentary audible click in test set; Sidetone continues; Panel lamp (STA) lights steadily; Ringer silenced.
5	Remove T and R (STA) short.	Momentary audible click in test set; Sidetone continues; Panel lamp (STA) flashes; Ringer sounds (interrupted).
6	Put test key in MONITOR position.	Sidetone lost; Panel lamp (STA) extinguished; Ringer silenced.
7	Remove test set from T and R (DISTANT END).	
8	Remove ringer from RG and RC terminals.	(END TEST)

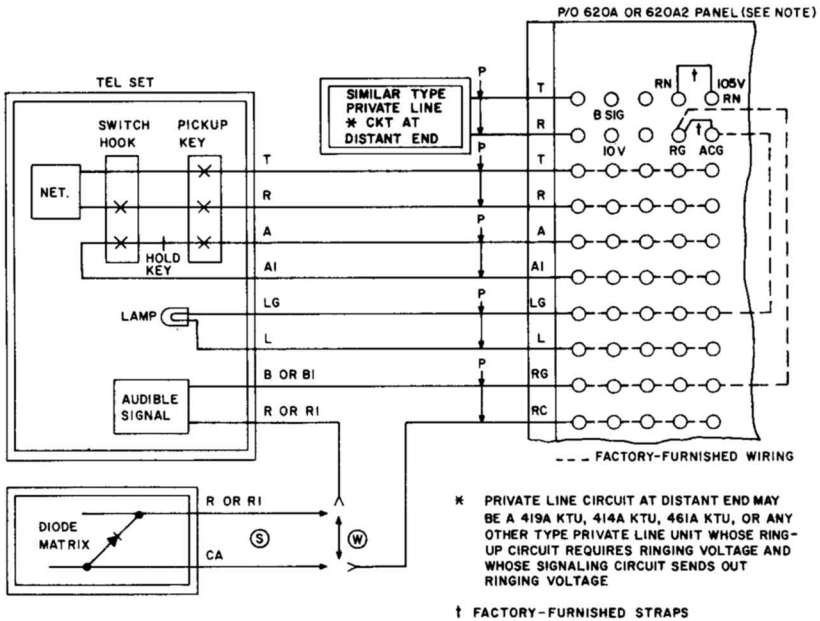

FEATURES				OPTION STRAPPING ON		KTU OPTION
				MODULAR PANEL	419A KTU	
AUDIBLE SIGNALS	UNDER CONTROL OF TIME-OUT CIRCUIT (B RELAY)	INTERRUPTED: WITHOUT DIODE MATRIX CONTROL	105V AC	105V RN TO RN	6 TO 8	W†
		INTERRUPTED: WITH DIODE MATRIX CONTROL				S†
TIME-OUT	6 SECONDS				9 TO 10	X
	17 SECONDS				7 TO 10	Z
	25 SECONDS				REMOVE X OR Z STRAPS	WITH-OUT X OR Z
AUDIBLE RINGBACK TONE					1 TO 2	M†

NOTE:
INSTALLATION OF A 419A KTU IN A 620A OR 620A2 PANEL REQUIRES TWO 9138 CONNECTORS IN A VERTICAL PLANE AND REMOVAL OF A GUIDE ASSEMBLY. CONNECTIONS ARE MADE TO THE UPPER QUADRANT OF THE TERMINAL FIELD AND THE LOWER QUADRANT REMAINS VACANT.

Fig. 26—419A KTU Connections (Automatic Signaling, Ringdown Private Line) in 620A (MD) or 620A2 Modular Panel

F. 419A KTU—Automatic Signaling, Ringdown Private Line (Fig. 26)

STEP	ACTION	VERIFICATION
1	Place ringer across T and R (DISTANT END) terminals.	
2	Place 1013A, or equivalent, test set (MONITOR) across T and R (STA) terminals.	
3	Put test key in TALK position.	Sidetone heard.
4	Apply A and A1 short.	Ringer (DISTANT END) sounds; Panel lamp (STA) lights steadily.
5	Remove A and A1 short.	Ringer (DISTANT END) silenced; Panel lamp extinguished.
6	Put test key in MONITOR position.	Sidetone lost.
7	Remove test set from T and R (STA).	
8	Move ringer from T and R (DISTANT END) terminals to RC and RG (STA) terminals.	
9	Factory-furnished straps RN to 105V RN and RG to ACG in place, add strap RG to T (DISTANT END) and strap RN to R (DISTANT END).	Ringer (STA) sounds; Panel lamp flashes.
10	Apply A and A1 short.	Ringer (STA) silenced; Panel lamp lights steadily.
11	Remove A and A1 short.	Ringer (STA) sounds; Panel lamp flashes.
12	Remove RN to R (DISTANT END) strap.	Ringer (STA) silenced; Panel lamp extinguished.
13	Remove RG to T (DISTANT END) strap.	
14	Remove ringer from T and R (STA) terminals.	(END TEST)

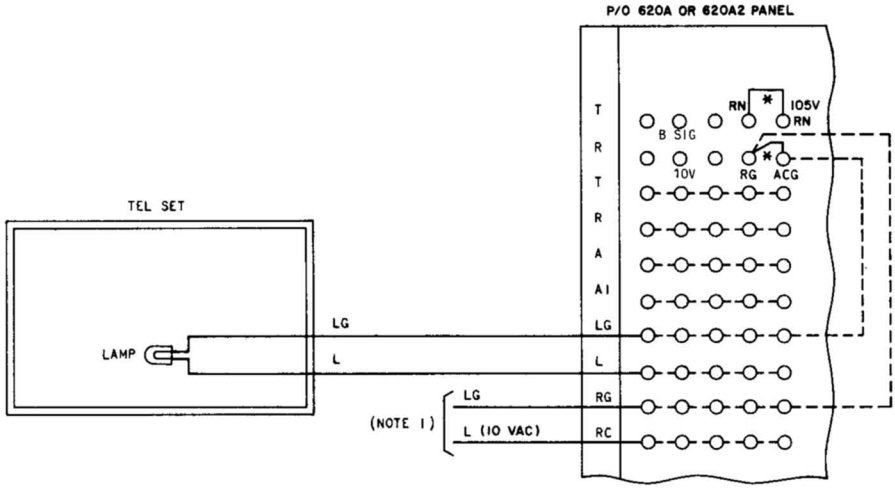

NOTES:
1. FROM L AND LG TERMINALS OF QUADRANT OF ASSOCIATED 400 LINE CIRCUIT OR ANOTHER 469A KTU.
2. 469A KTU CAN DRIVE MAXIMUM OF 20 LAMPS (OR 19 LAMPS AND ANOTHER 469A).

--- FACTORY-FURNISHED WIRING

* FACTORY-FURNISHED STRAP

Fig. 27—469A KTU Connections (Lamp Extender) in 620A (MD) or 620A2 Modular Panel

STEP	ACTION	VERIFICATION

G. 469A KTU—Lamp Extender (Fig. 27)

STEP	ACTION	VERIFICATION
1	Place strap from 10V RN terminal on panel to RC (L lead) terminal.	Panel lamp flashes.
2	Remove strap.	Panel lamp extinguished.
		(END TEST)

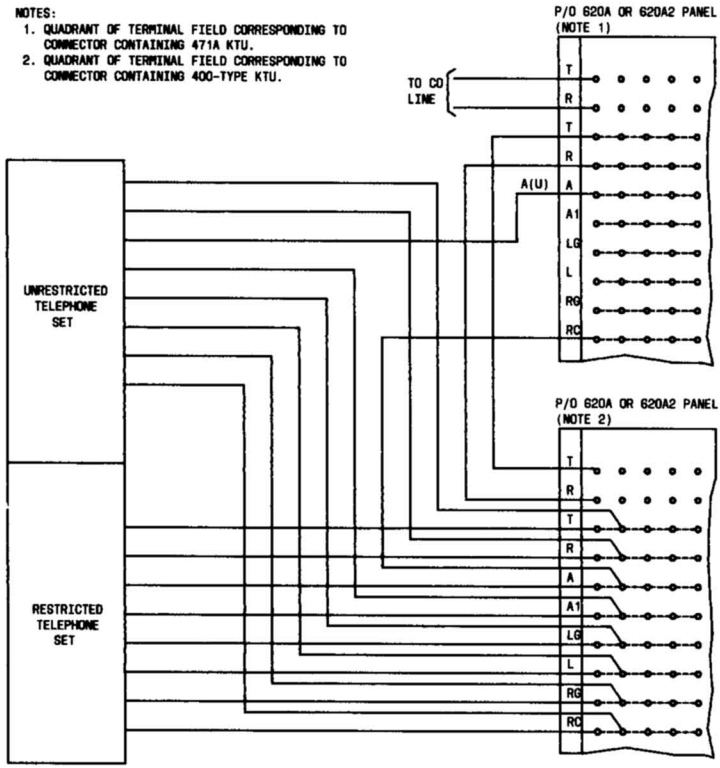

Fig. 28—♦471-Type KTU Connections (Battery Reversal Toll Restriction) in 620A (MD) or 620A2 Modular Panel♦

H. 471-Type KTU—Battery Reversal Toll Restriction (Fig. 28)

STEP	ACTION	VERIFICATION
1	Test requires CO line be connected to T and R (CO) terminals.	
2	Strap A1 and RC terminals.	
3	Connect 1013A test set or equivalent to T and R (STA) terminals with switch in MONITOR.	
4	Operate switch to TALK.	Dial tone heard.
5	Dial toll code.	CO line opened for approximately 1 second. Dial tone heard.
6	Operate switch to MONITOR.	CO disconnects.
7	Move strap to A1 and A terminals.	
8	Operate switch to TALK.	Dial tone heard.
9	Dial toll code.	Call not restricted.
10	Operate switch to MONITOR. Remove 1013A test set and A1 and A strap.	(END TEST)

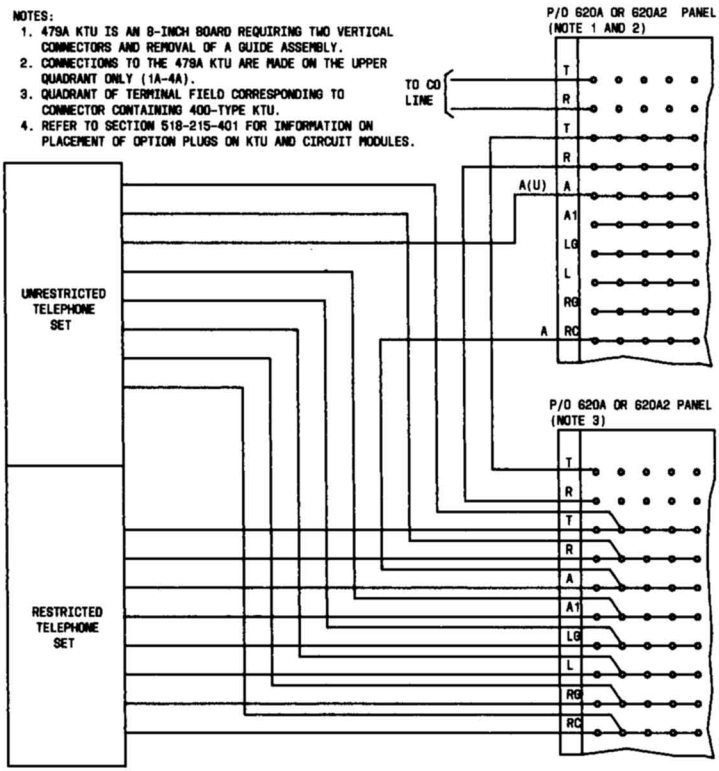

Fig. 29—479-Type KTU Connections (Rotary Dial Toll Restriction) in 620A (MD) or 620A2 Modular Panel

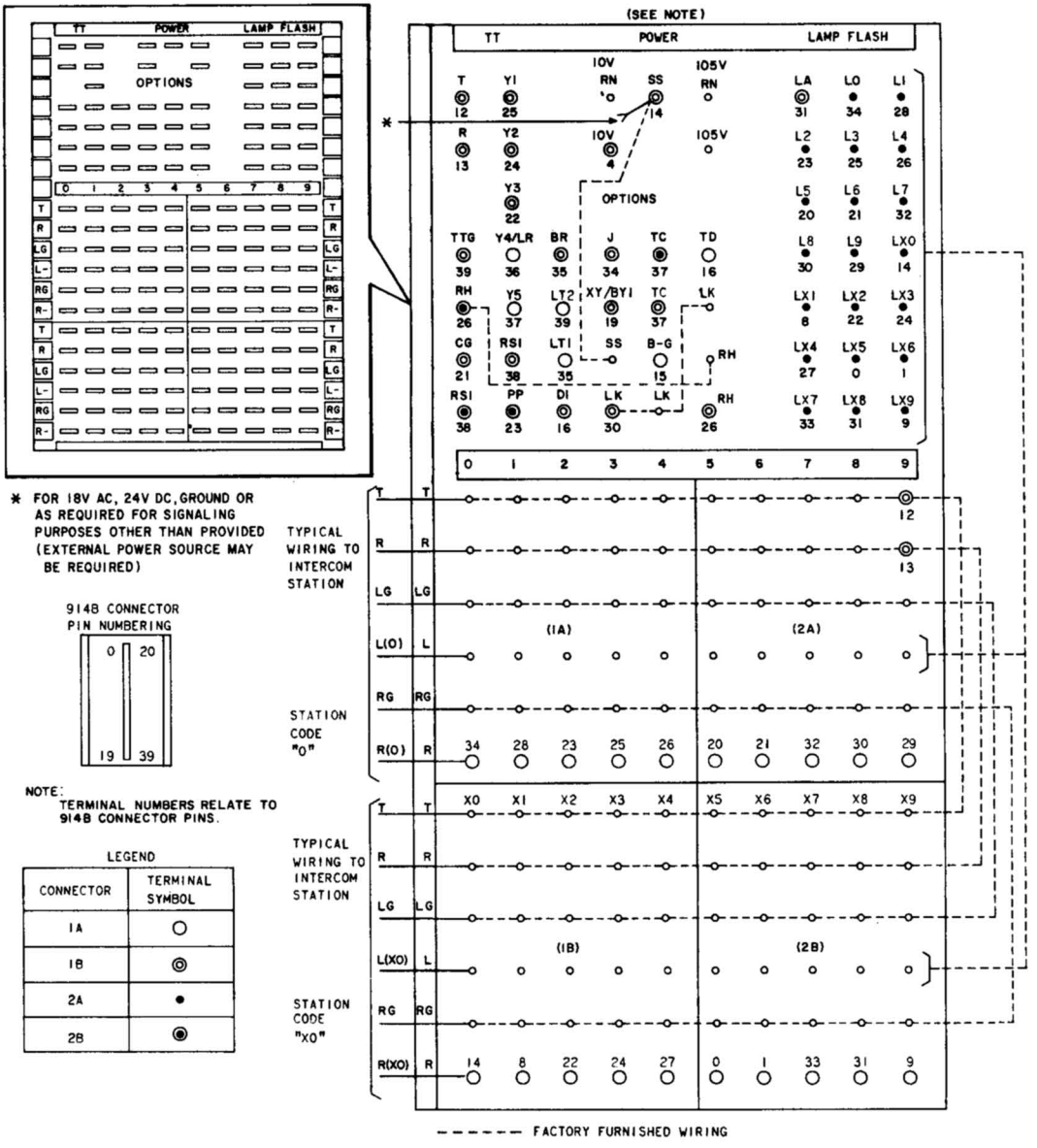

Fig. 30—Terminal Field Illustration and Terminal Designations for 641A Modular Panel (Dial Intercom Services)

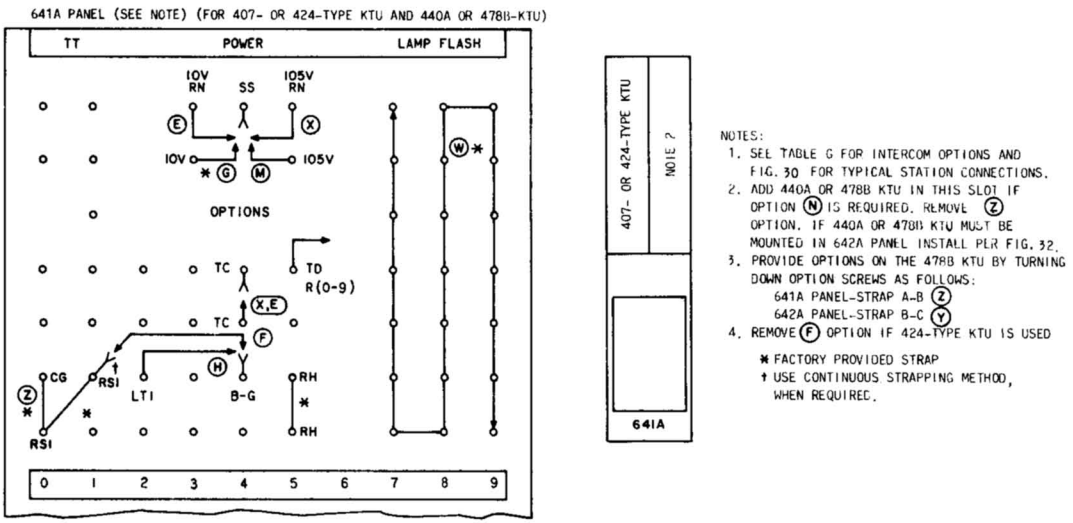

Fig. 31—407- or 424-Type Connections (Basic Dial Intercom Selector Circuit) With Rotary or TOUCH-TONE Dialing (440A or 478B KTU)

I. 407- or 424-Type KTU—Basic Dial Intercom Selector Circuit (Fig. 31)

STEP	ACTION	VERIFICATION
1	Place appropriate type audible signal device (bell or buzzer) across RG and R-5 terminals.	
2	Place 1013A, or equivalent, test set (MONITOR) across T and R (STA) terminals.	
3	Put test key in TALK position.	Sidetone heard; Panel lamp lights steadily.
4	Dial digit 5.	Audible signal sounds.
5	Put test key in MONITOR position.	Sidetone lost; Panel lamp extinguished.
6	Remove test set from terminals.	
7	Remove audible signal device.	
8a	If 407-type KTU under test—	(END TEST)
9b	If 424-type KTU under test— Place appropriate type audible signal device across RG and R-X7 terminals.	
10b	Strap TD terminal to R-2 terminal. (R-2 selected as transfer digit for testing purposes.)	
11b	Place 1013A, or equivalent, test set (MONITOR) across T and R (STA) terminals.	
12b	Put test key in TALK position.	Sidetone heard; Panel lamp lights steadily.
13b	Dial intercom code 27.	Audible signal sounds.
14b	Put test key in MONITOR position.	Sidetone lost; Panel lamp extinguished.
15b	Remove test set from terminals.	
16b	Remove audible signal device.	
17b	Remove strap between TD and R-2 terminals.	(END TEST)

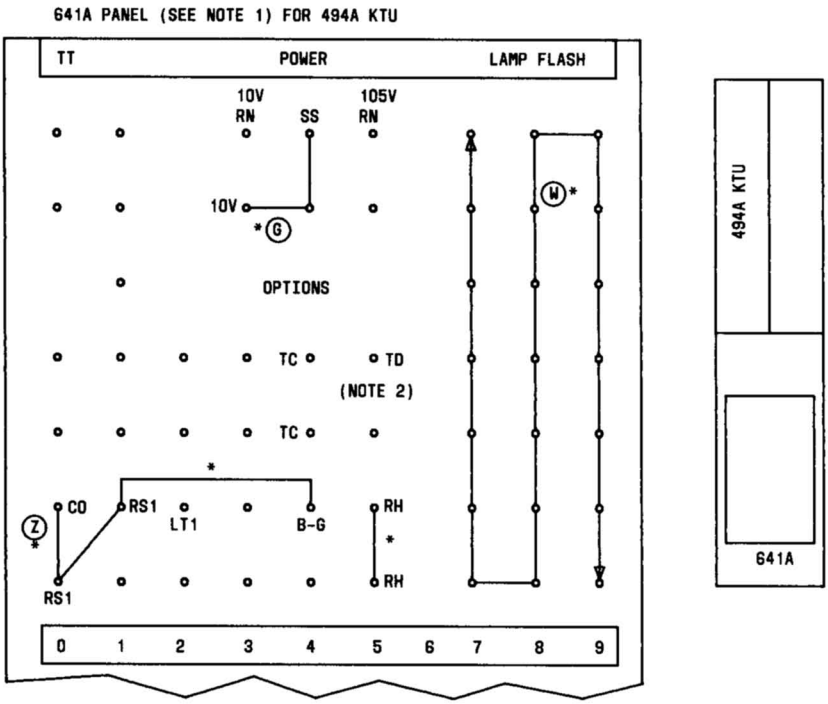

NOTES:
1. SEE TABLE G FOR INTERCOM OPTIONS AND FIG. 30 FOR TYPICAL STATION CONNECTIONS.
2. FOR 19-CODE INTERCOM, THE DIGIT 1 IS THE TRANSFER DIGIT. NO TRANSFER CODE STRAP IS REQUIRED.

* FACTORY-PROVIDED STRAP. OPTIONS (G) AND (W) ARE REQUIRED. OTHER FACTORY-PROVIDED STRAPS MAY BE LEFT IN PLACE IF PRESENT.

Fig. 32 -494 KTU Connections (Basic Dial Intercom) With TOUCH-TONE Selector Circuit

J. 494A KTU—TOUCH-TONE Selector Circuit (Fig. 32)

STEP	ACTION	VERIFICATION
1	Place appropriate type audible signal device (bell or buzzer) across RG and R-5 terminals.	

STEP	ACTION	VERIFICATION
2	Connect tip and ring leads of 2500D, or equivalent, telephone set across T and R (STA) terminals.	
3	Go off-hook.	Sidetone heard; Panel lamp lights steadily.
4	Dial digit 5.	Audible signal sounds.
5	Go on-hook.	Panel lamp extinguished.
6	Move audible signal to RG and R-XS terminals.	
7	Go off-hook.	Sidetone heard; Panel lamp lights steadily.
8	Dial digit 15.	Audible signal sounds.
9	Go on-hook.	Panel lamp extinguished.
10	Remove audible signal device.	
11	Remove telephone set from terminals.	(END TEST)

Functional Designations

5.09 The following list provides functional designations for dial intercom leads and relates them to their function in the system.

BL,BL1,...BLO	STATION BUSY GROUND	LX1, LX0	TRANSFERRED STATION LAMP
BR	SWITCHED B BATTERY	R1,...RX0	STATION RINGING LEAD
BY1	BUSY GROUND	RH	R RELAY HOLD
CG	COUNTER GROUND	RN	INTERRUPTED RINGING
D1	OFF-HOOK DETECTION	RS1	RESET
J	J GROUND	SS	SIGNAL INPUT
L	LAMP	ST	START
L1,...LX0	STATION LAMP	TC	B RELAY CONTROL
LG or MG	LAMP GROUND or MOTOR GROUND	TD	TRANSFER DIGIT
LK	DIAL TONE DISCONNECT	TTG	TOUCH-TONE GROUND
LT1, LT2	LAMP TRANSFER	Y1,...Y5	COUNTER RELAY SELECTION

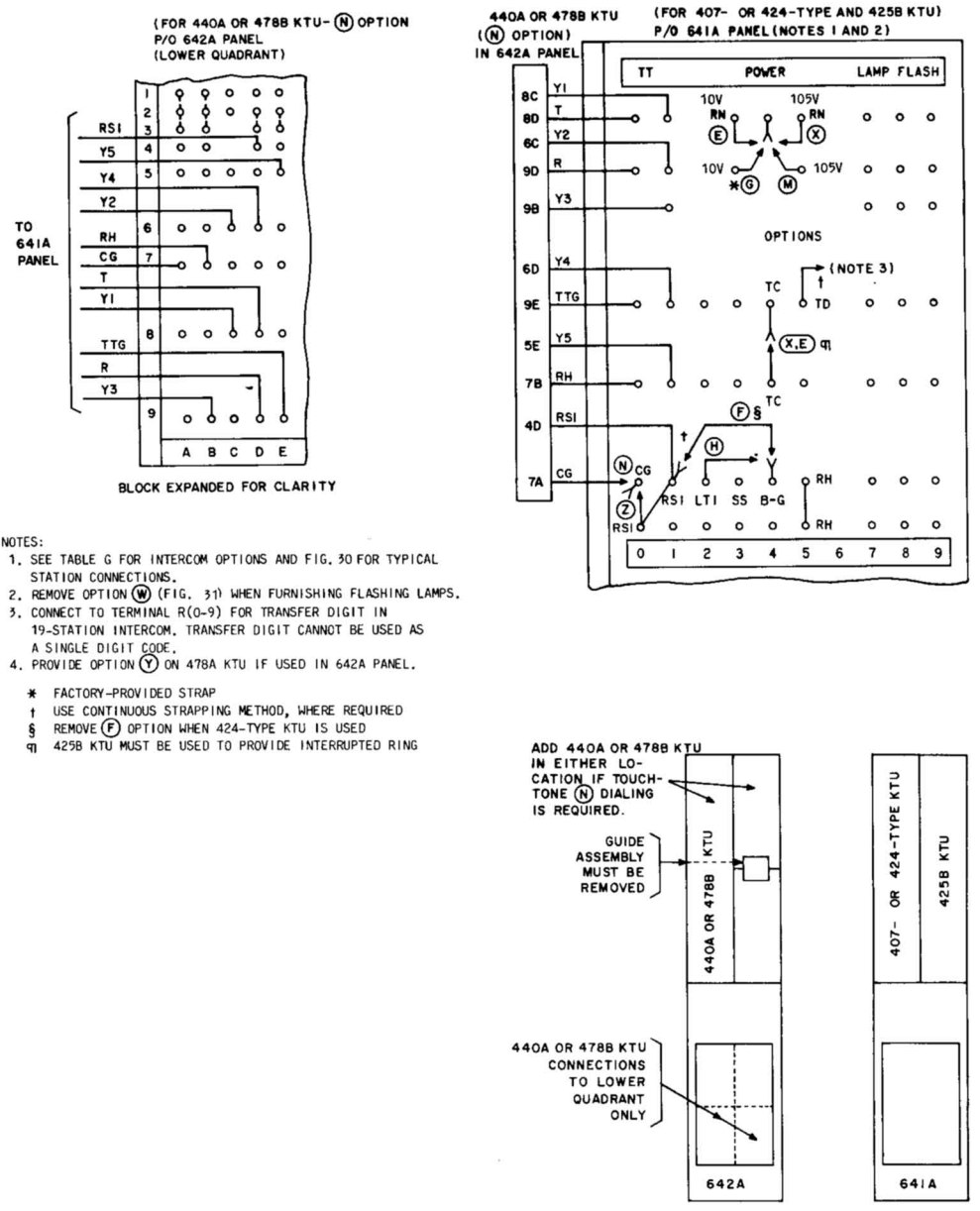

NOTES:
1. SEE TABLE G FOR INTERCOM OPTIONS AND FIG. 30 FOR TYPICAL STATION CONNECTIONS.
2. REMOVE OPTION (W) (FIG. 31) WHEN FURNISHING FLASHING LAMPS.
3. CONNECT TO TERMINAL R(0-9) FOR TRANSFER DIGIT IN 19-STATION INTERCOM. TRANSFER DIGIT CANNOT BE USED AS A SINGLE DIGIT CODE.
4. PROVIDE OPTION (Y) ON 478A KTU IF USED IN 642A PANEL.

* FACTORY-PROVIDED STRAP
† USE CONTINUOUS STRAPPING METHOD, WHERE REQUIRED
§ REMOVE (F) OPTION WHEN 424-TYPE KTU IS USED
¶ 425B KTU MUST BE USED TO PROVIDE INTERRUPTED RING

Fig. 33—Deluxe Dial Intercom Connections (407- or 424-Type KTU) With Flashing Lamp (425B KTU) and Rotary or TOUCH-TONE Dialing (440A or 478B KTU)

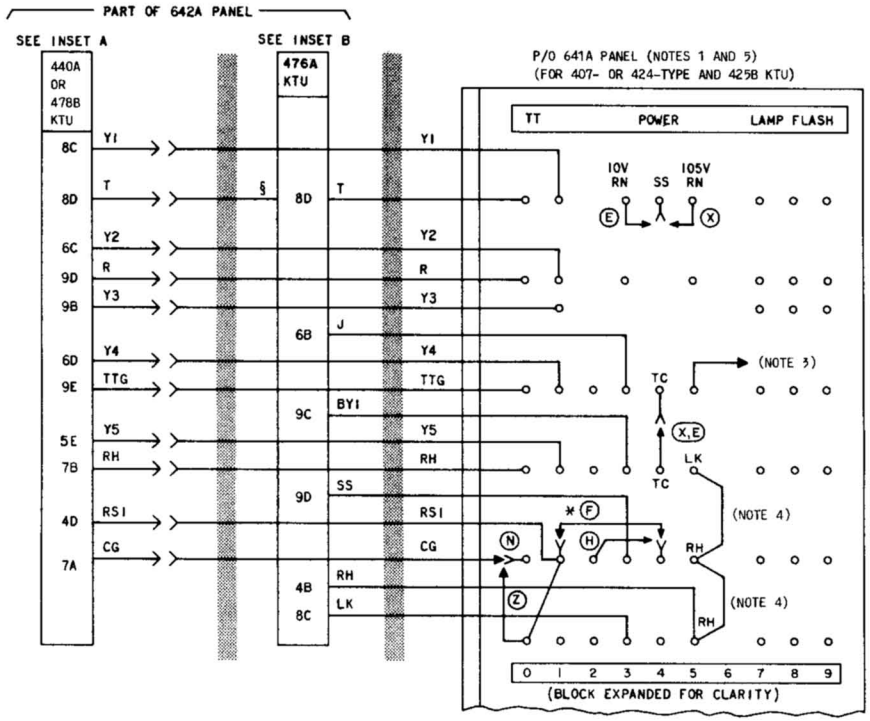

NOTES:

1. SEE TABLE G FOR INTERCOM OPTIONS AND FIG. 30 FOR TYPICAL STATION CONNECTIONS.
2. WHEN 476A KTU IS USED, ALL POWER OPTIONS EXCEPT THE TC TO TC STRAP FOR (C, X) WILL BE APPLIED ON THE 642A PANEL INSTEAD OF THE 641A PANEL.
3. CONNECT TO TERMINAL R(0-9) FOR TRANSFER DIGIT OF 19-CODE INTERCOM. TRANSFER DIGIT CAN NOT BE USED AS A SINGLE DIGIT CODE.
4. STRAP RH TO LK WHEN 440A OR 478B AND 476A KTU ARE BOTH USED. STRAP RH TO RH WHEN EITHER IS NOT USED.
5. REMOVE OPTION (W) (FIG. 31) WHEN FURNISHING FLASHING LAMPS.

* REMOVE OPTION F WHEN 424-TYPE KTU IS USED.

OPTION STRAPPING ON KTUS

KTU	FEATURES		OPTION	STRAP TERMINALS
476A	DIAL TONE		ZD	1 TO 2
	STA BUSY TONE		ZF	7 TO 8
	RINGBACK TONE	± 110V ± 10V	ZE	4 TO 5
478B	USED IN 642A PANEL		Y	B TO C

Fig. 34—Deluxe Dial Intercom Connections (407- or 424-Type KTU) With Flashing Lamp (425B KTU), Audible Tone (476A KTU), and Rotary or TOUCH-TONE Dialing (440A or 478B KTU) (Sheet 1 of 2)

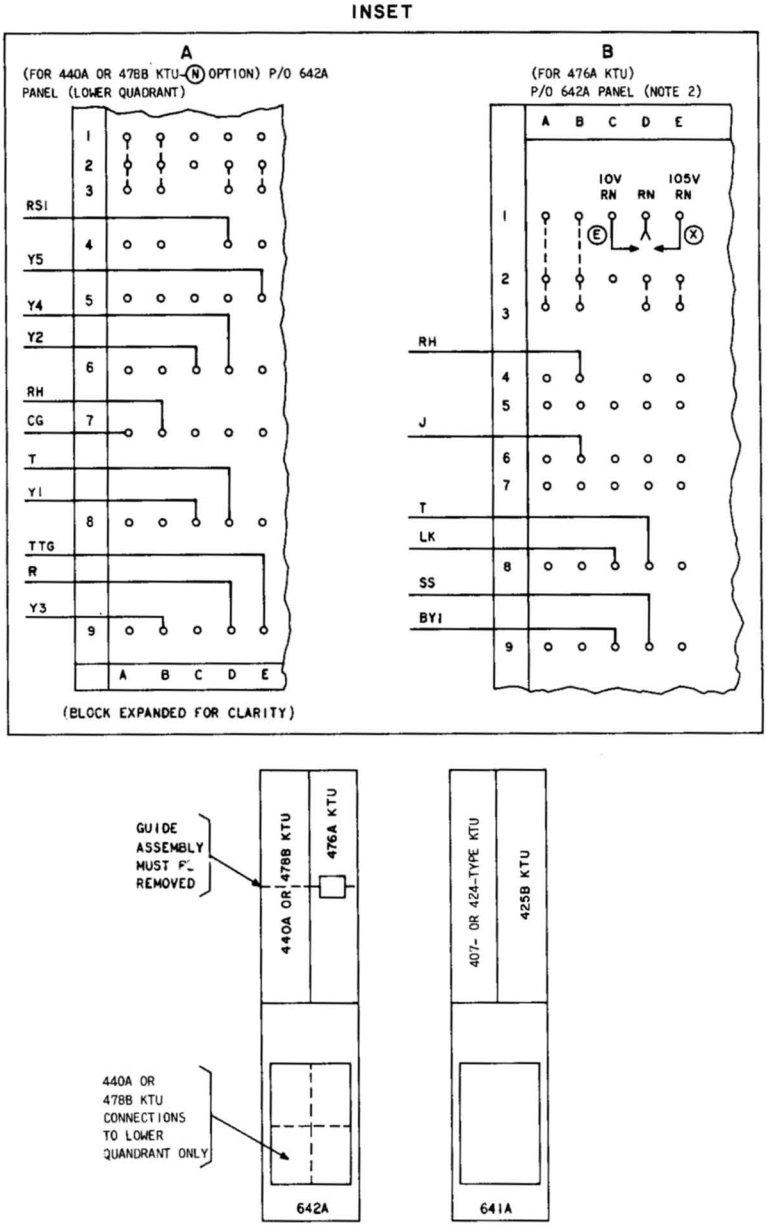

Fig. 34—Deluxe Dial Intercom Connections (407- or 424-Type KTU) With Flashing Lamp (425B KTU), Audible Tone (476A KTU), and Rotary or TOUCH-TONE Dialing (440A or 478B KTU) (Sheet 2 of 2)

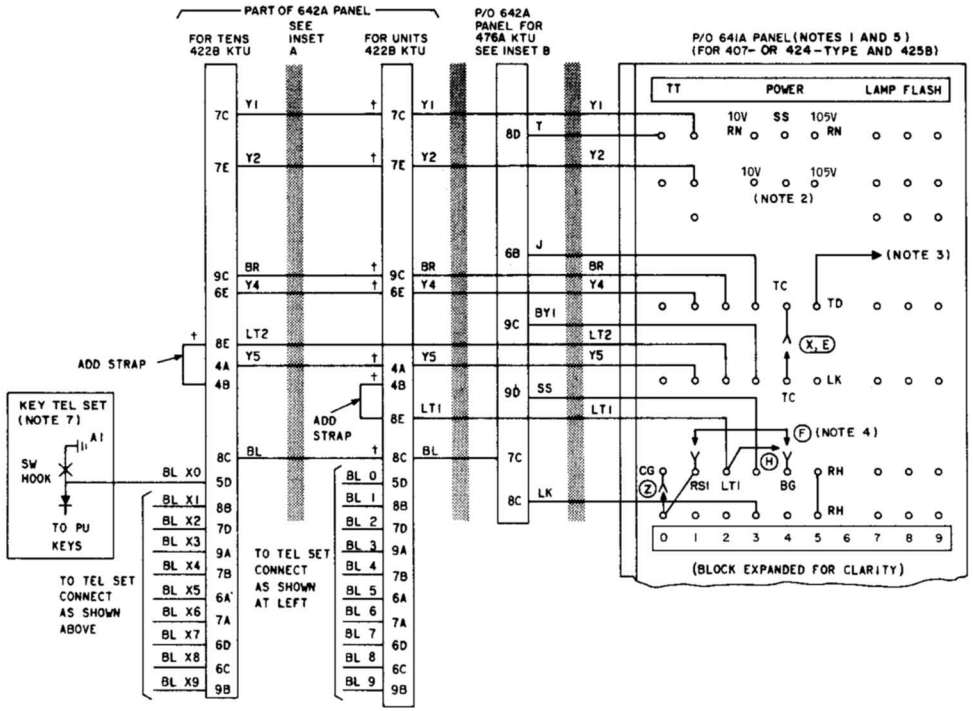

OPTION STRAPPING ON 476A KTU OPTION BLOCK

FEATURES		OPTION	STRAP TERMINALS
DIAL TONE		ZD	1 TO 2
STA BUSY TONE		ZF	7 TO 8
RINGBACK TONE	± 110V	ZE	4 TO 5
	+ 10V		

NOTES:
1. SEE TABLE G FOR INTERCOM OPTIONS AND FIG. 30 FOR TYPICAL STATION CONNECTIONS.
2. OPTIONS (G), (M) CANNOT BE USED WITH STATION BUSY TONE (476A KTU) OR FLASHING LAMPS (425B KTU).
3. CONNECT TO TERMINAL R(0-9) FOR TRANSFER DIGIT OF 19-CODE INTERCOM. TRANSFER DIGIT CANNOT BE USED AS A SINGLE DIGIT CODE.
4. REMOVE FACTORY-FURNISHED OPTION (F) WHEN A 424A KTU IS USED.
5. REMOVE OPTION (W) (FIG. 31) WHEN FURNISHING FLASHING LAMPS.
6. WHEN 476A KTU IS USED, ALL POWER OPTIONS EXCEPT THE TC TO TC STRAP FOR (E,X) WILL BE APPLIED TO THE 642A PANEL INSTEAD OF THE 641A PANEL.
7. FOR CONNECTION OF DIODE, USE BUSY LAMP OPTION AS SHOWN IN SECTION FOR SET USED.

* WHEN A 424-TYPE KTU IS USED, SEPARATE 422B KTUS MUST BE PROVIDED FOR THE UNITS GROUP (0-9) AND THE TENS GROUP (X0-X9). TENS GROUP LEADS ARE BRIDGED (LOOPED) FROM THE UNITS GROUPS, EXCEPTING THE LT1 AND LT2 LEADS.
† USE CONTINUOUS STRAPPING METHOD

Fig. 35—Deluxe Dial Intercom Connections (407- or 424-Type KTU) With Flashing Lamp (425B KTU), Audible Tone (476A KTU), and Rotary Dialing With Optional Station Busy Selector (422-Type KTU) (Sheet 1 of 2)

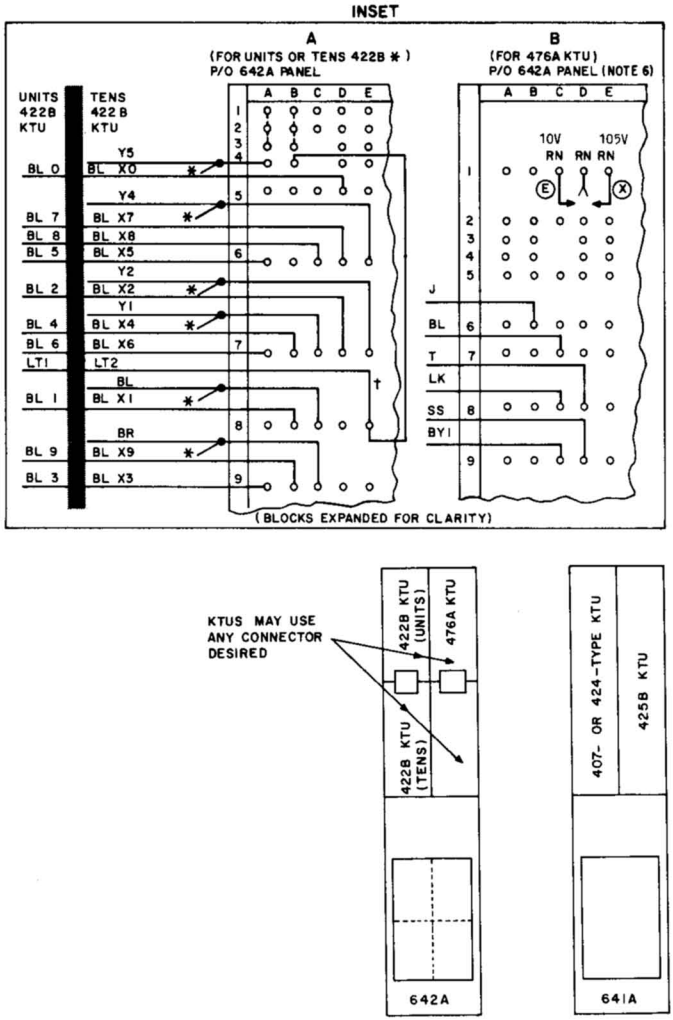

Fig. 35—Deluxe Dial Intercom Connections (407- or 424-Type KTU) With Flashing Lamp (425B KTU), Audible Tone (476A KTU), and Rotary Dialing With Optional Station Busy Selector (422-Type KTU) (Sheet 2 of 2)

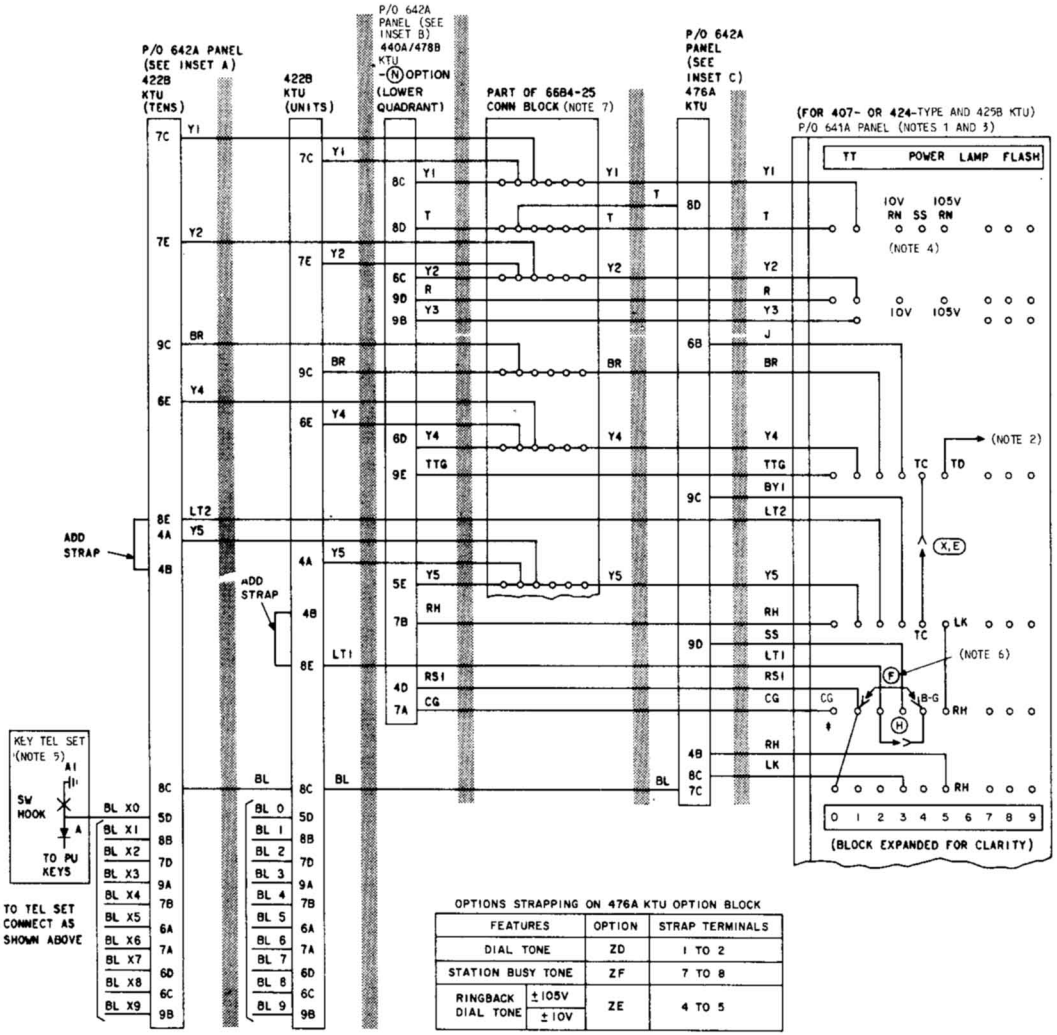

Fig. 36—Deluxe Dial Intercom Connections (407- or 424-Type KTU) With Flashing Lamp (425B KTU), Audible Tone (476A KTU), and TOUCH-TONE Dialing (440A or 478B KTU) With Optional Station Busy Selector (422-Type KTU) (Sheet 1 of 2)

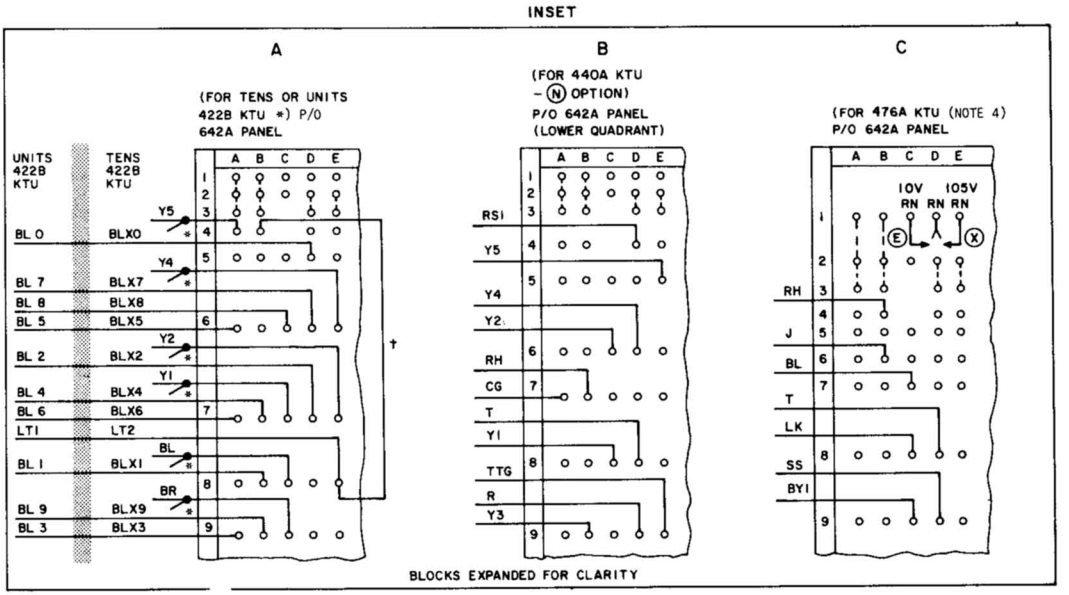

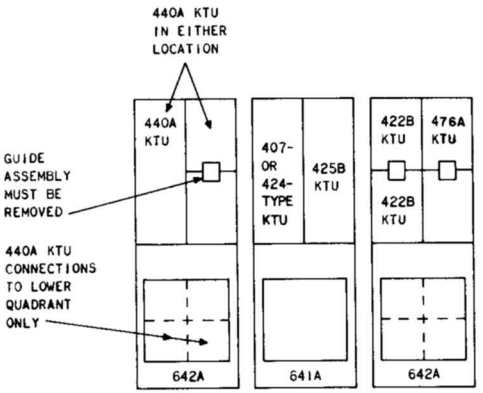

NOTES:

1. SEE TABLE G FOR INTERCOM OPTIONS AND FIG. 30 FOR TYPICAL STATION CONNECTIONS.
2. CONNECT TO R(0-9) TERMINAL FOR TRANSFER DIGIT OF 19-STATION INTERCOM. TRANSFER DIGIT CANNOT BE USED AS A SINGLE DIGIT CODE.
3. REMOVE OPTION (W) (FIG.31) WHEN FURNISHING FLASHING LAMPS.
4. WHEN 476A KTU IS USED, ALL POWER OPTIONS EXCEPT THE TC TO TC STRAP FOR (E,X) WILL BE APPLIED TO THE 642A PANEL INSTEAD OF THE 641A. BOTH PANELS MUST USE SAME POWER SUPPLY.
5. FOR CONNECTION OF DIODE, USE BUSY LAMP OPTION AS SHOWN IN SECTION FOR SET USED.
6. REMOVE OPTION (F) IF A 424-TYPE KTU IS USED.
7. YELLOW BACKBOARD (185A1) RECOMMENDED.

* WHEN A 424-TYPE KTU IS USED, SEPARATE 422B KTUS MUST BE PROVIDED FOR THE UNITS GROUP (0-9) AND THE TENS GROUP (X0-X9). TENS GROUP LEADS ARE BRIDGED (LOOPED) FROM THE UNITS GROUP EXCEPTING THE SEPARATE LT1 AND LT2 LEADS.

† USE CONTINUOUS STRAPPING METHOD

* DISCONNECT (Z) OPTION AT CG TERMINALS

Fig. 36—Deluxe Dial Intercom Connections (407- or 424-Type KTU) With Flashing Lamp (425B KTU), Audible Tone (476A KTU), and TOUCH-TONE Dialing (440A or 478B KTU) With Optional Station Busy Selector (422-Type KTU) (Sheet 2 of 2)

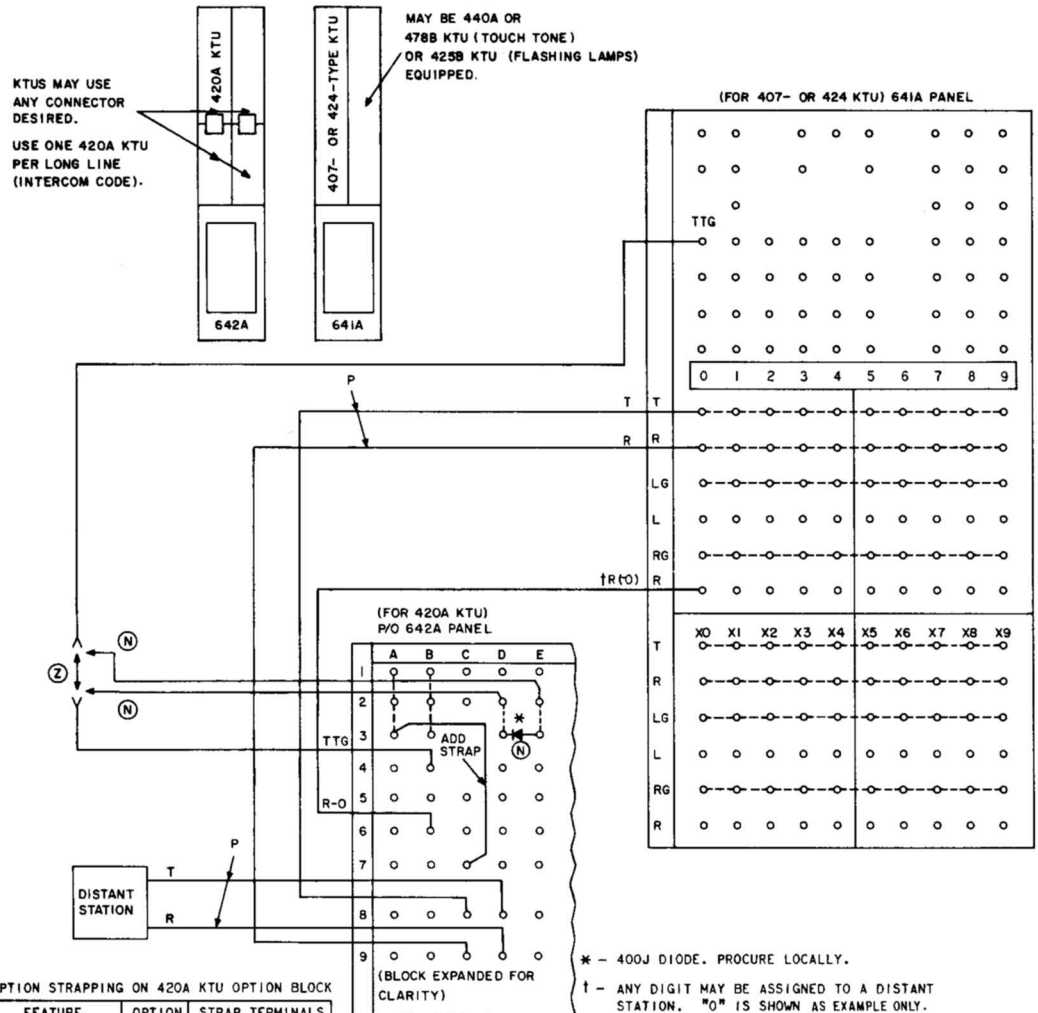

OPTION STRAPPING ON 420A KTU OPTION BLOCK

FEATURE		OPTION	STRAP TERMINALS
AUDIBLE SIGNALS	10 VAC	E OR G	1 TO 4, 7 TO 8
	-24 VDC	K	
	110V 30 HZ	X OR M	2 TO 4, 7 TO 8

Fig. 37—Long Line Circuit (420A KTU) Option for Basic or Deluxe Dial Intercom

K. 420A KTU—Long Line Circuit (Fig. 37)

STEP	ACTION	VERIFICATION
1	Place 1013A, or equivalent, test set (MONITOR) across T and R (DISTANT END) terminals.	
2	Put test key in TALK position.	Sidetone heard.
3	Put test key in MONITOR position.	Sidetone lost.
4	Remove test set from T and R (DISTANT END) terminals.	(END TEST)

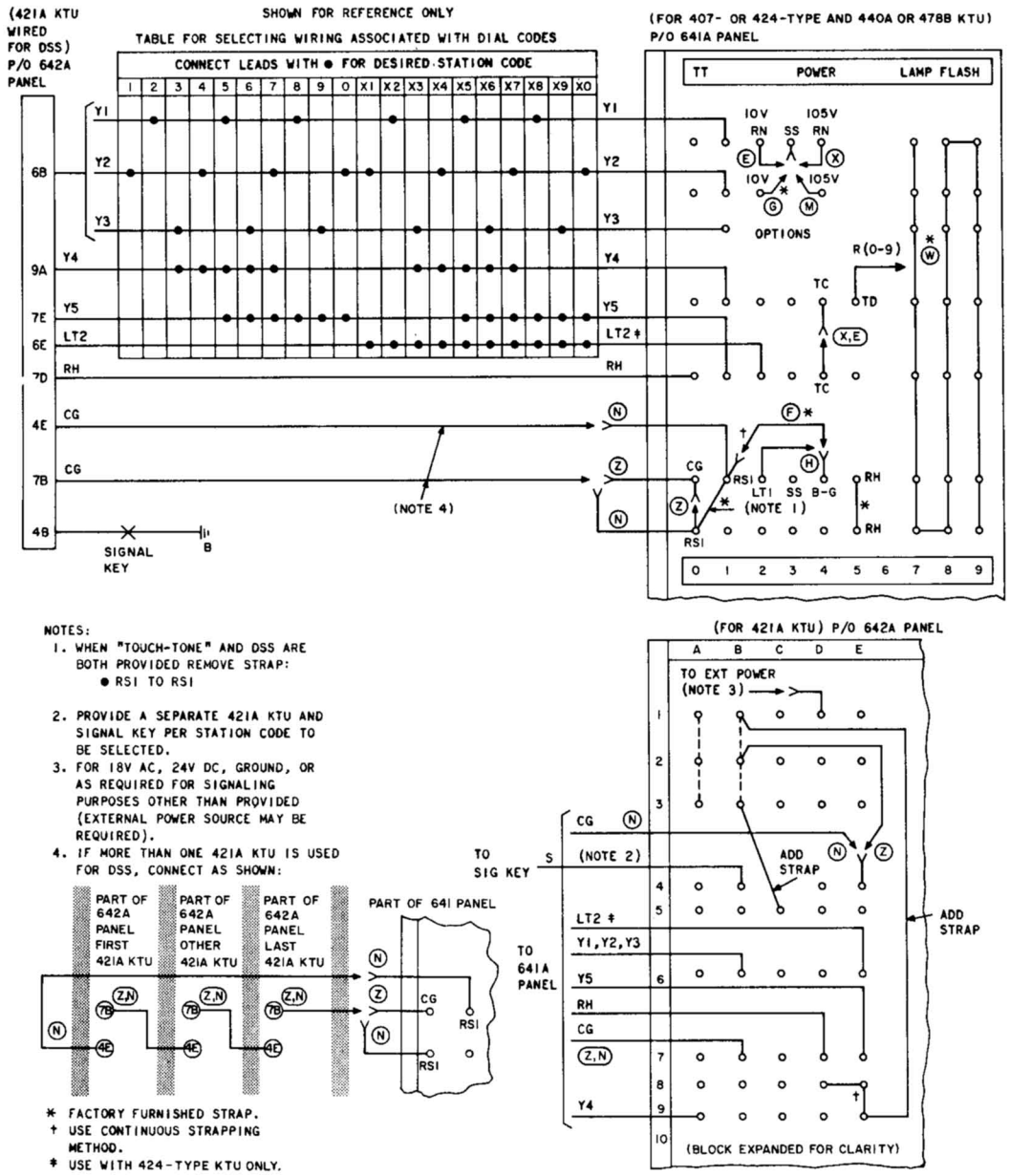

Fig. 38—Direct Station Selection Option (421A KTU in 642A Modular Panel) for Basic or Deluxe Dial Intercom (Sheet 1 of 2)

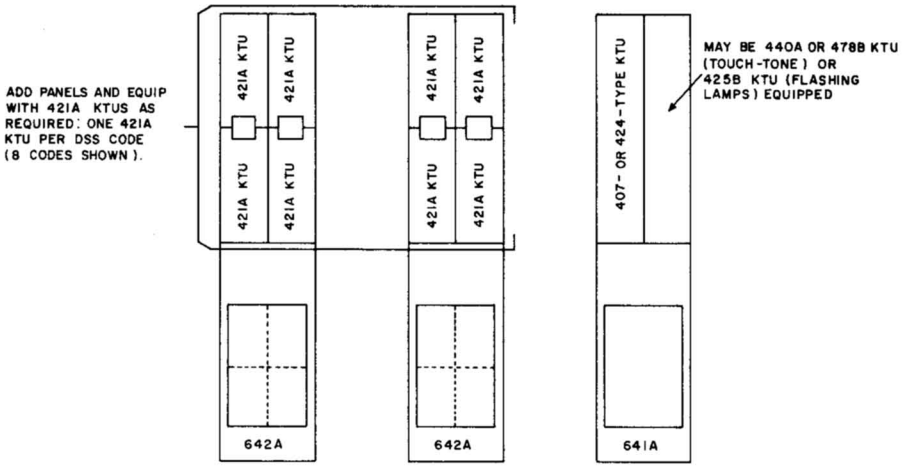

Fig. 38—Direct Station Selection Option (421A KTU in 642A Modular Panel) for Basic or Deluxe Dial Intercom (Sheet 2 of 2)

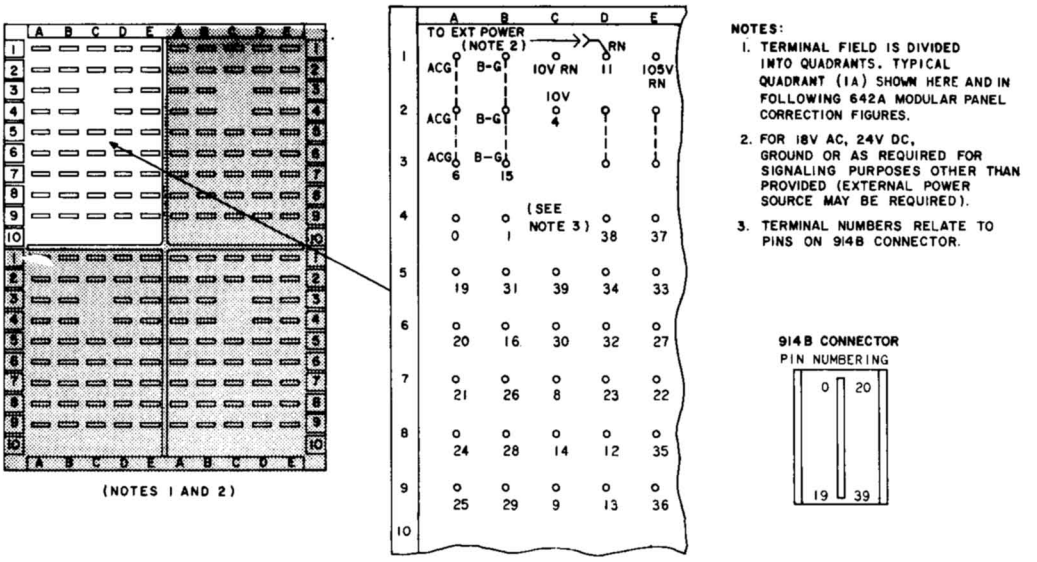

Fig. 39—Terminal Field Illustration and Terminal Designations for 642A Modular Panel (Miscellaneous Services)

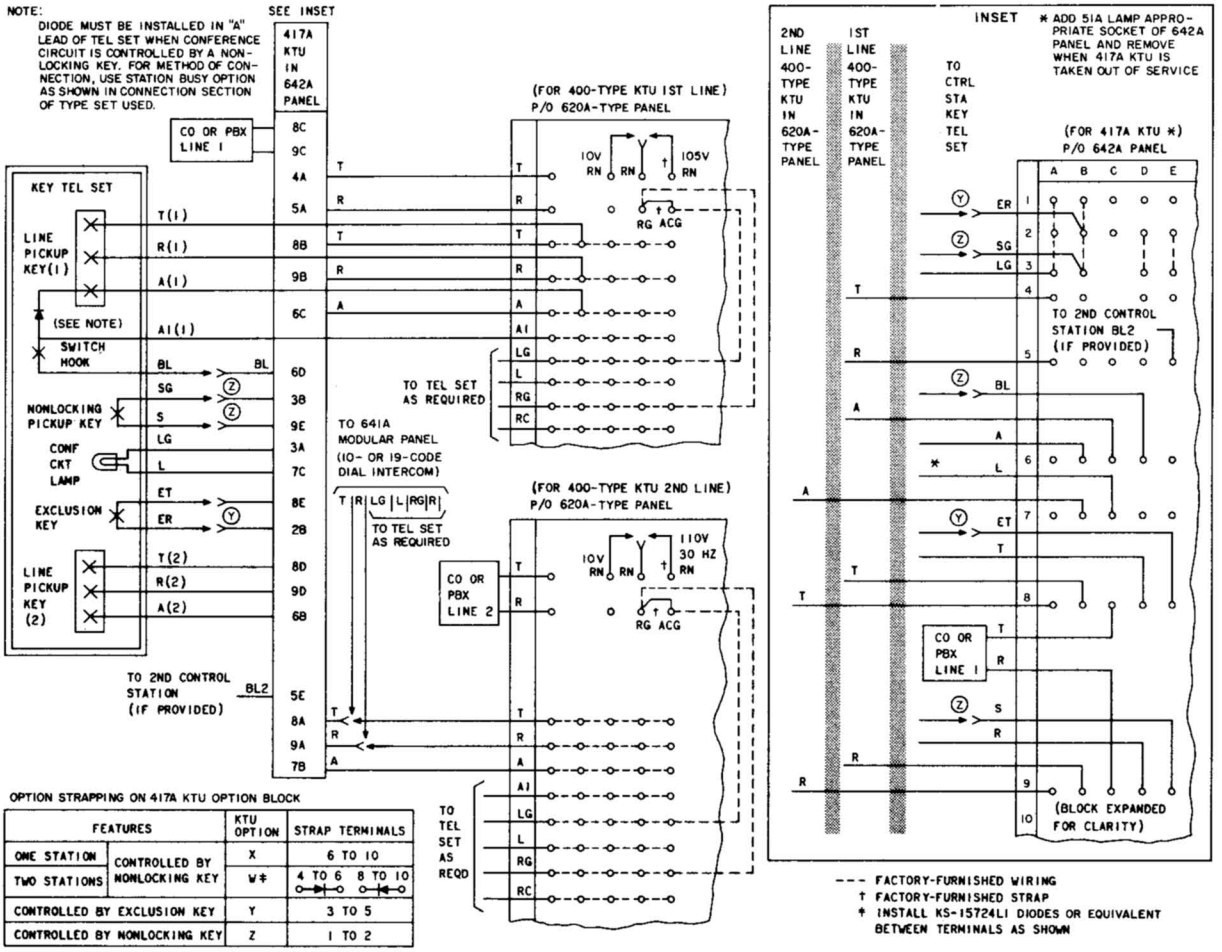

OPTION STRAPPING ON 417A KTU OPTION BLOCK

FEATURES		KTU OPTION	STRAP TERMINALS
ONE STATION	CONTROLLED BY NONLOCKING KEY	X	6 TO 10
TWO STATIONS		W‡	4 TO 6, 8 TO 10
CONTROLLED BY EXCLUSION KEY		Y	3 TO 5
CONTROLLED BY NONLOCKING KEY		Z	1 TO 2

--- FACTORY-FURNISHED WIRING
† FACTORY-FURNISHED STRAP
‡ INSTALL KS-15724L1 DIODES OR EQUIVALENT BETWEEN TERMINALS AS SHOWN

Fig. 40—417A KTU Connections (Add-On Conference Circuit) in 642A Modular Panel

L. 417A KTU—Add-On Conference Circuit (Fig. 40)

STEP	ACTION	VERIFICATION
1	(Z option in place.) Apply S and SG (A and A1) short.	Panel lamp lights steadily.
2	Remove S and SG short.	Panel lamp extinguished. (END TEST)

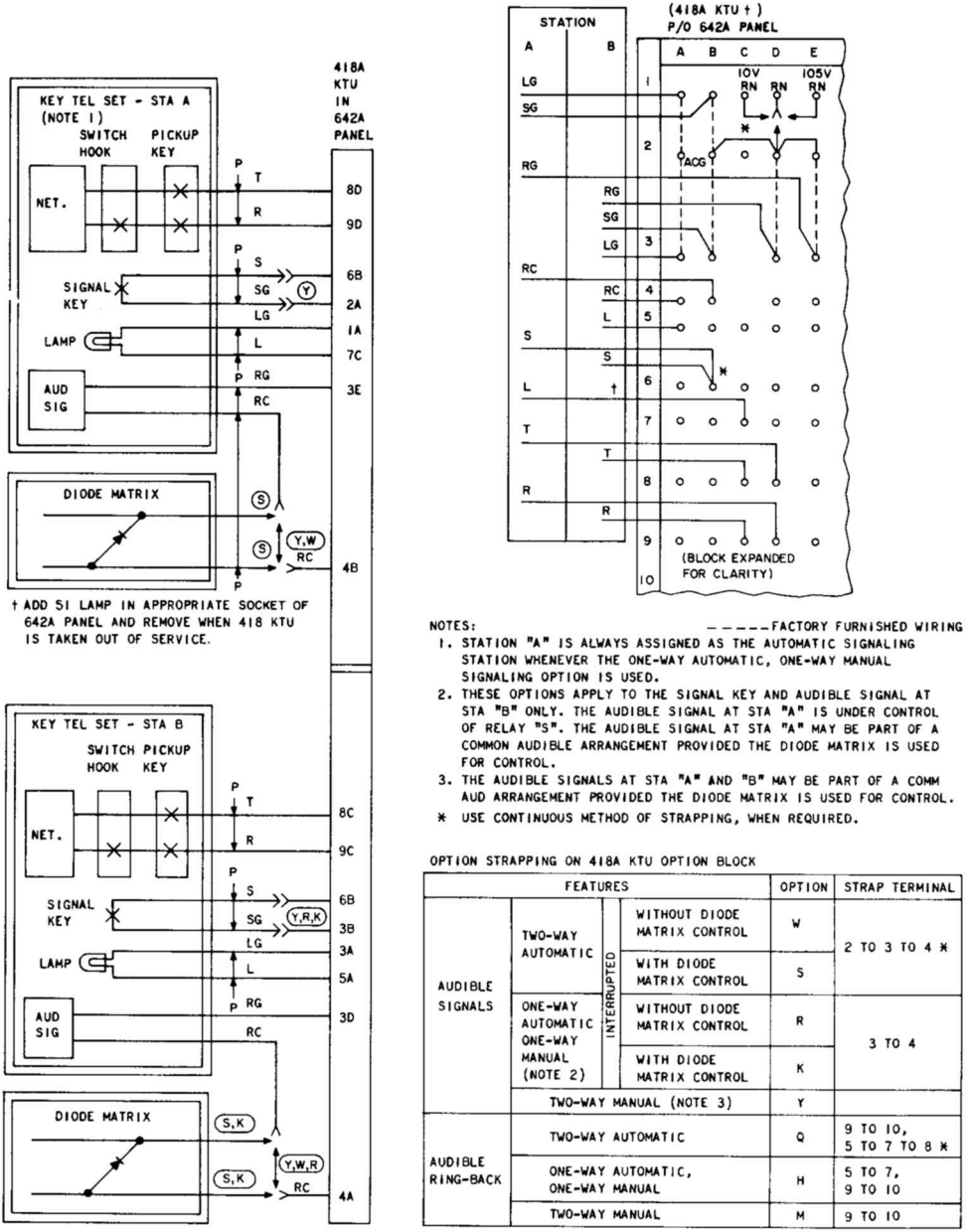

NOTES: ----- FACTORY FURNISHED WIRING

1. STATION "A" IS ALWAYS ASSIGNED AS THE AUTOMATIC SIGNALING STATION WHENEVER THE ONE-WAY AUTOMATIC, ONE-WAY MANUAL SIGNALING OPTION IS USED.
2. THESE OPTIONS APPLY TO THE SIGNAL KEY AND AUDIBLE SIGNAL AT STA "B" ONLY. THE AUDIBLE SIGNAL AT STA "A" IS UNDER CONTROL OF RELAY "S". THE AUDIBLE SIGNAL AT STA "A" MAY BE PART OF A COMMON AUDIBLE ARRANGEMENT PROVIDED THE DIODE MATRIX IS USED FOR CONTROL.
3. THE AUDIBLE SIGNALS AT STA "A" AND "B" MAY BE PART OF A COMM AUD ARRANGEMENT PROVIDED THE DIODE MATRIX IS USED FOR CONTROL.

* USE CONTINUOUS METHOD OF STRAPPING, WHEN REQUIRED.

OPTION STRAPPING ON 418A KTU OPTION BLOCK

FEATURES				OPTION	STRAP TERMINAL
AUDIBLE SIGNALS	TWO-WAY AUTOMATIC	INTERRUPTED	WITHOUT DIODE MATRIX CONTROL	W	2 TO 3 TO 4 *
			WITH DIODE MATRIX CONTROL	S	
	ONE-WAY AUTOMATIC ONE-WAY MANUAL (NOTE 2)		WITHOUT DIODE MATRIX CONTROL	R	3 TO 4
			WITH DIODE MATRIX CONTROL	K	
	TWO-WAY MANUAL (NOTE 3)			Y	
AUDIBLE RING-BACK	TWO-WAY AUTOMATIC			Q	9 TO 10, 5 TO 7 TO 8 *
	ONE-WAY AUTOMATIC, ONE-WAY MANUAL			H	5 TO 7, 9 TO 10
	TWO-WAY MANUAL			M	9 TO 10

Fig. 41—418A KTU Connections (Short Range, DC Signaling Private Line) in 642A Modular Panel

M. 418A KTU—Short Range, DC Signaling Private Line (Fig. 41)

STEP	ACTION	VERIFICATION
1	Place ringer across RG2 and RC2 (STA B) terminals.	
2	Place 1013A or equivalent, test set (MONITOR) across T and R (STA A).	
3	Put test key in TALK position.	Sidetone heard; Panel lamp (STA A) lights steadily. Ringer (STA B) sounds (interrupted).
4	Apply S and SG/A (A and A1) short (STA A).	Ringer (STA B) sounds (steady).
5	Remove S and SG short (STA A).	Ringer (STA B) sounds (interrupted).
6	Put test set in MONITOR position.	Sidetone lost; Panel lamp (STA A) extinguished. Ringer (STA B) silenced.
7	Move ringer from RG2 and RC2 (STA B) terminals to RG1 and RC1 (STA A) terminals.	
8	Move test from T and R (STA A) terminals to T and R (STA B).	
9	Put test key in TALK position.	Sidetone heard. Ringer (STA A) sounds (interrupted). Panel lamp (STA A) flashes.
10	Apply S and SG (A and A1) short (STA B).	Ringer (STA A) sounds (steady).
11	Remove S and SG short (STA B).	Ringer (STA A) sounds (interrupted). Panel lamp (STA A) flashes.
12	Apply T and R (STA A) short.	Ringer (STA A) silenced. Panel lamp (STA A) lights steadily.
13	Put test key in MONITOR position.	Sidetone lost.
14	Remove test set from T and R (STA B) terminals.	
15	Remove ringer from RG1 and RC1 terminals.	(END TEST)

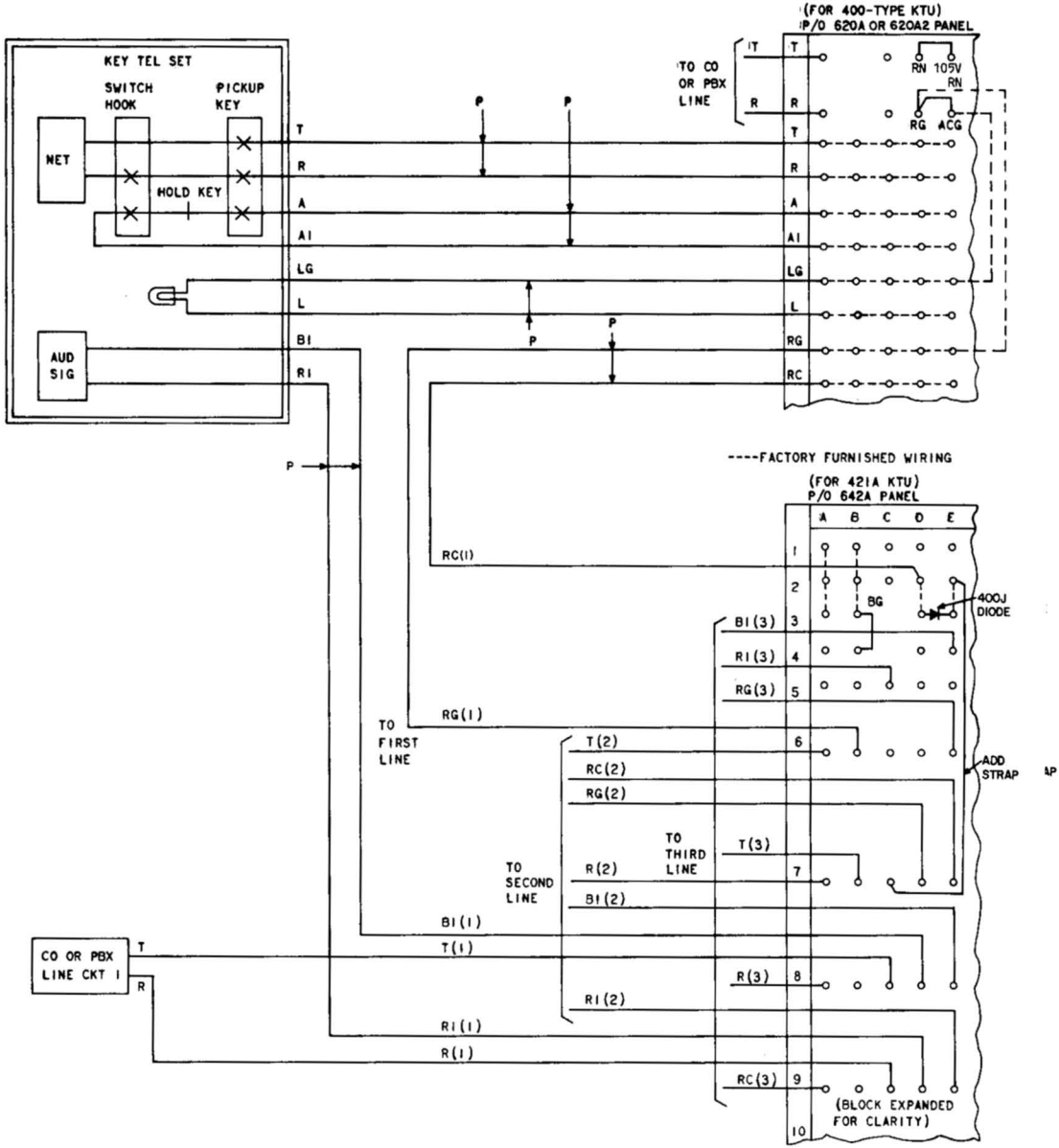

Fig. 42—421A KTU Connections (Power Failure Transfer) in 642A Modular Panel

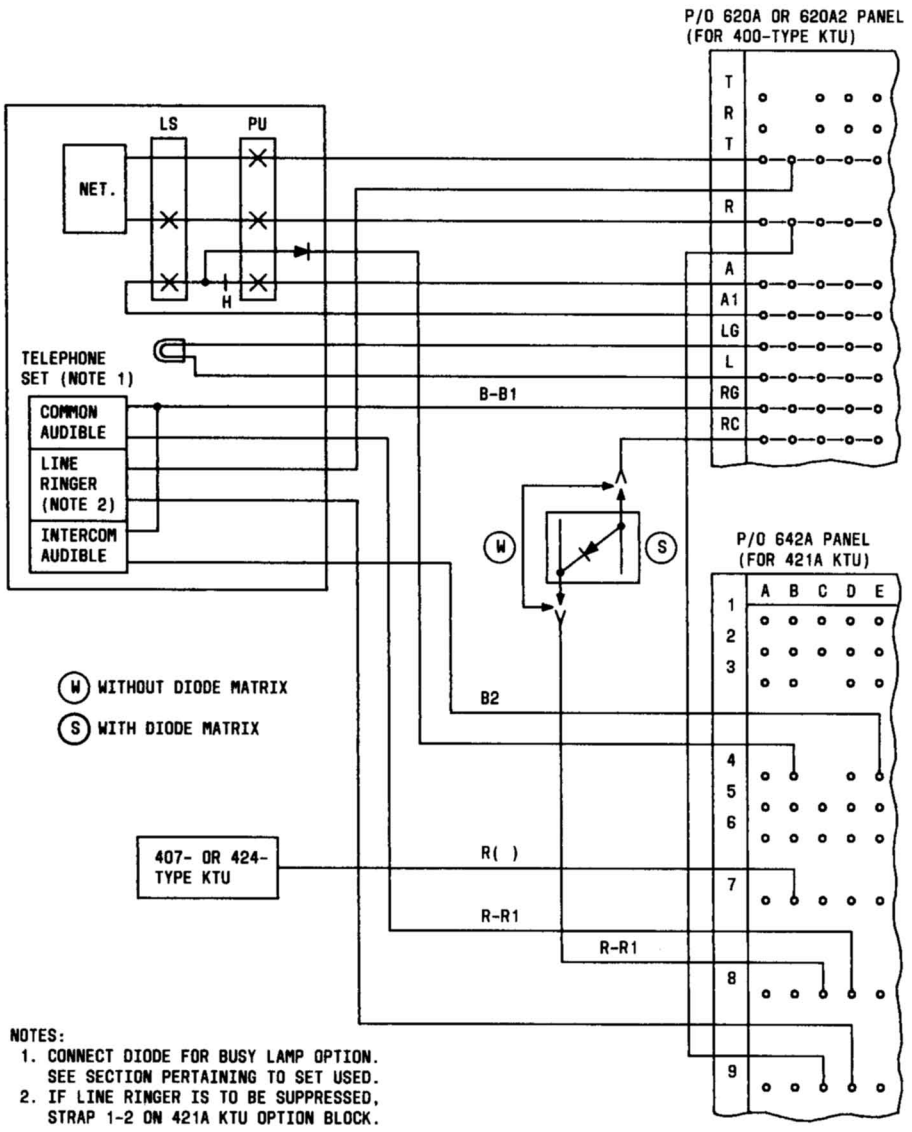

Fig. 43—421A KTU Connections (Audible Signal Suppression) in 642A Modular Panel

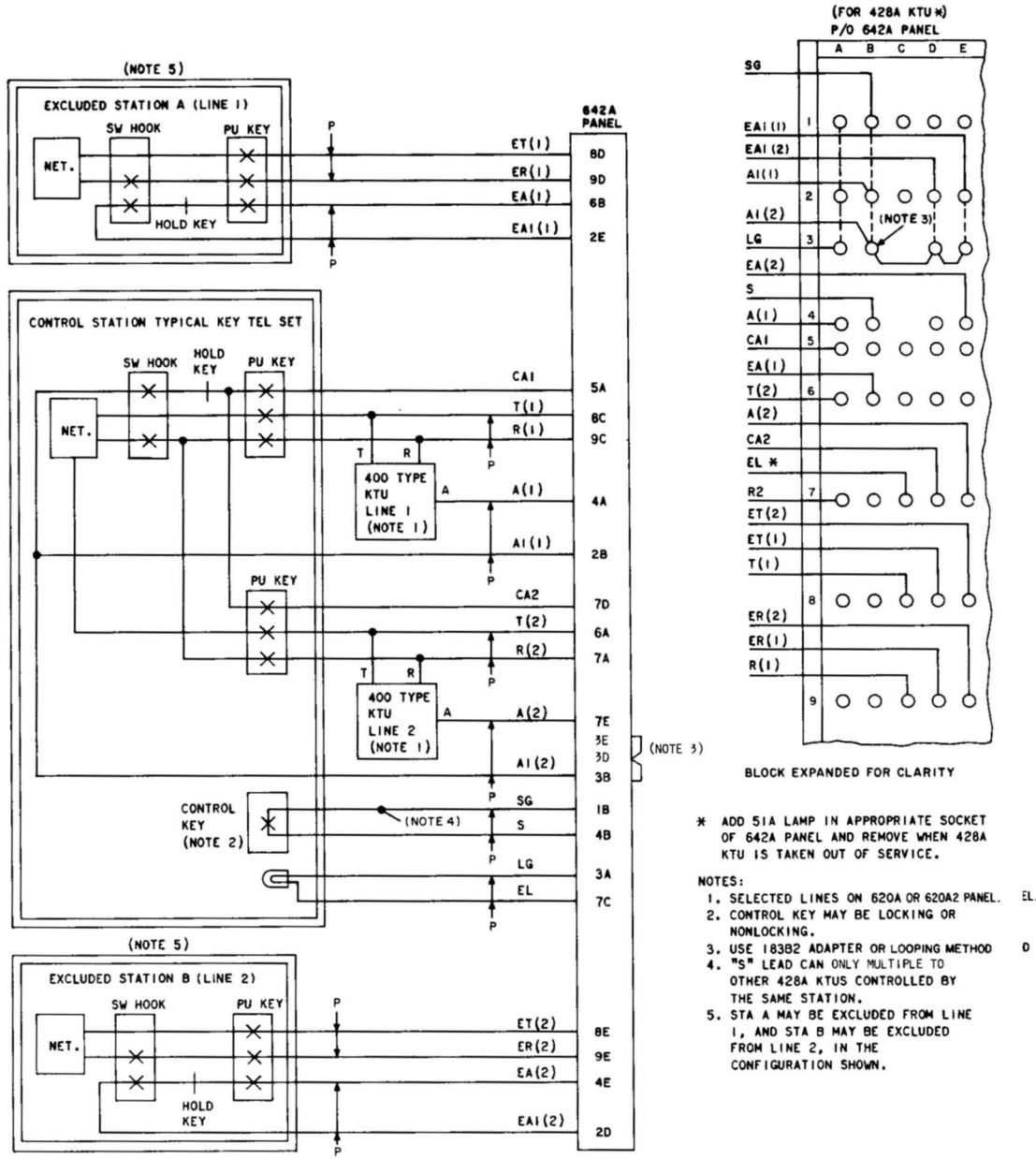

* ADD 51A LAMP IN APPROPRIATE SOCKET OF 642A PANEL AND REMOVE WHEN 428A KTU IS TAKEN OUT OF SERVICE.

NOTES:

1. SELECTED LINES ON 620A OR 620A2 PANEL.
2. CONTROL KEY MAY BE LOCKING OR NONLOCKING.
3. USE 183B2 ADAPTER OR LOOPING METHOD
4. "S" LEAD CAN ONLY MULTIPLE TO OTHER 428A KTUS CONTROLLED BY THE SAME STATION.
5. STA A MAY BE EXCLUDED FROM LINE 1, AND STA B MAY BE EXCLUDED FROM LINE 2, IN THE CONFIGURATION SHOWN.

Fig. 44—428A KTU Connections (Multiline Exclusion) in 642A Modular Panel

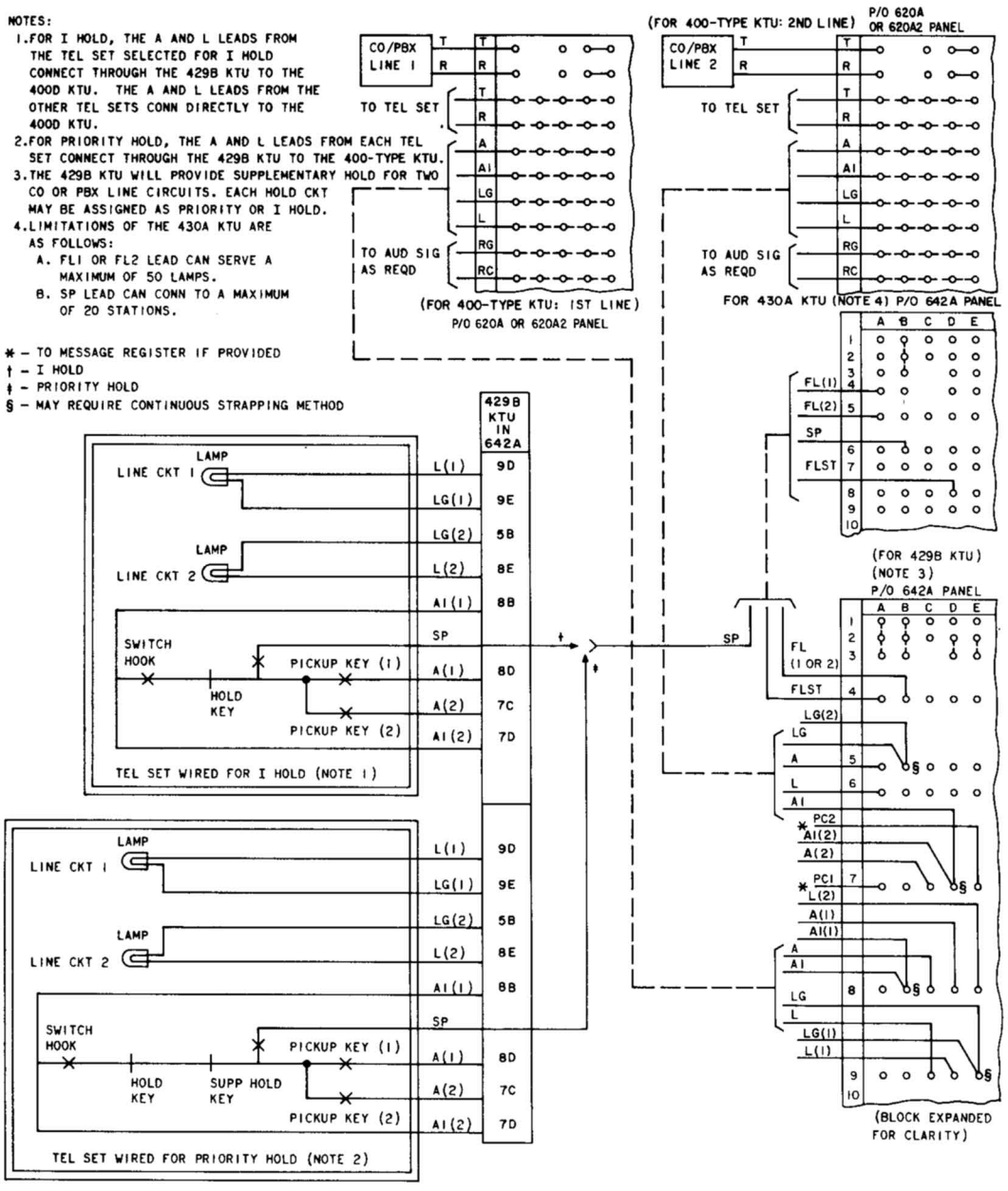

Fig. 45—429B KTU Connections (Supplementary Hold Detector) and 430A KTU (Flutter Generator) in 642A Modular Panel

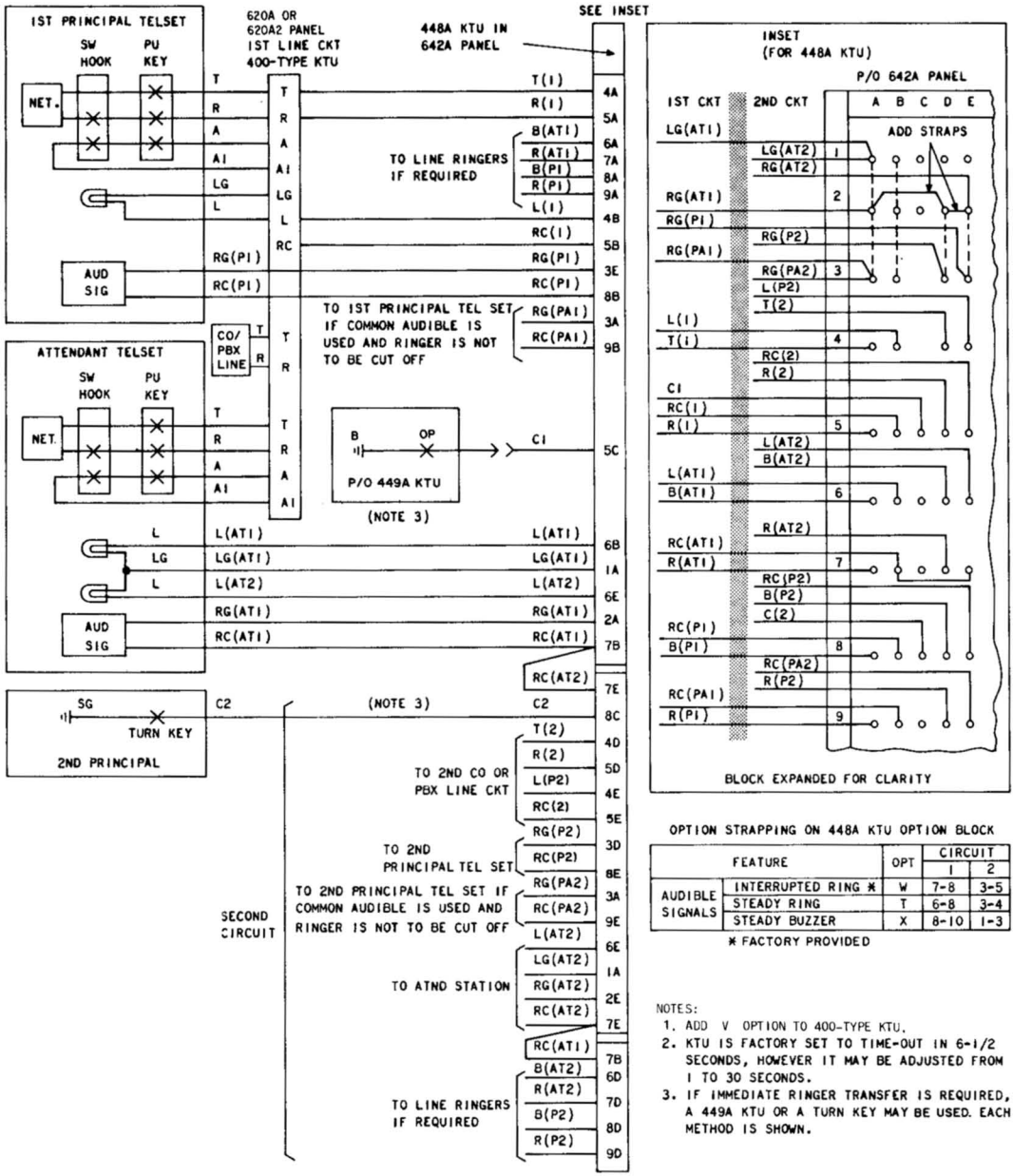

OPTION STRAPPING ON 448A KTU OPTION BLOCK

FEATURE		OPT	CIRCUIT 1	CIRCUIT 2
AUDIBLE SIGNALS	INTERRUPTED RING *	W	7-8	3-5
	STEADY RING	T	6-8	3-4
	STEADY BUZZER	X	8-10	1-3

* FACTORY PROVIDED

NOTES:
1. ADD V OPTION TO 400-TYPE KTU.
2. KTU IS FACTORY SET TO TIME-OUT IN 6-1/2 SECONDS, HOWEVER IT MAY BE ADJUSTED FROM 1 TO 30 SECONDS.
3. IF IMMEDIATE RINGER TRANSFER IS REQUIRED, A 449A KTU OR A TURN KEY MAY BE USED. EACH METHOD IS SHOWN.

Fig. 46—448A KTU Connections (Variable Delay Timer) in 642A Modular Panel

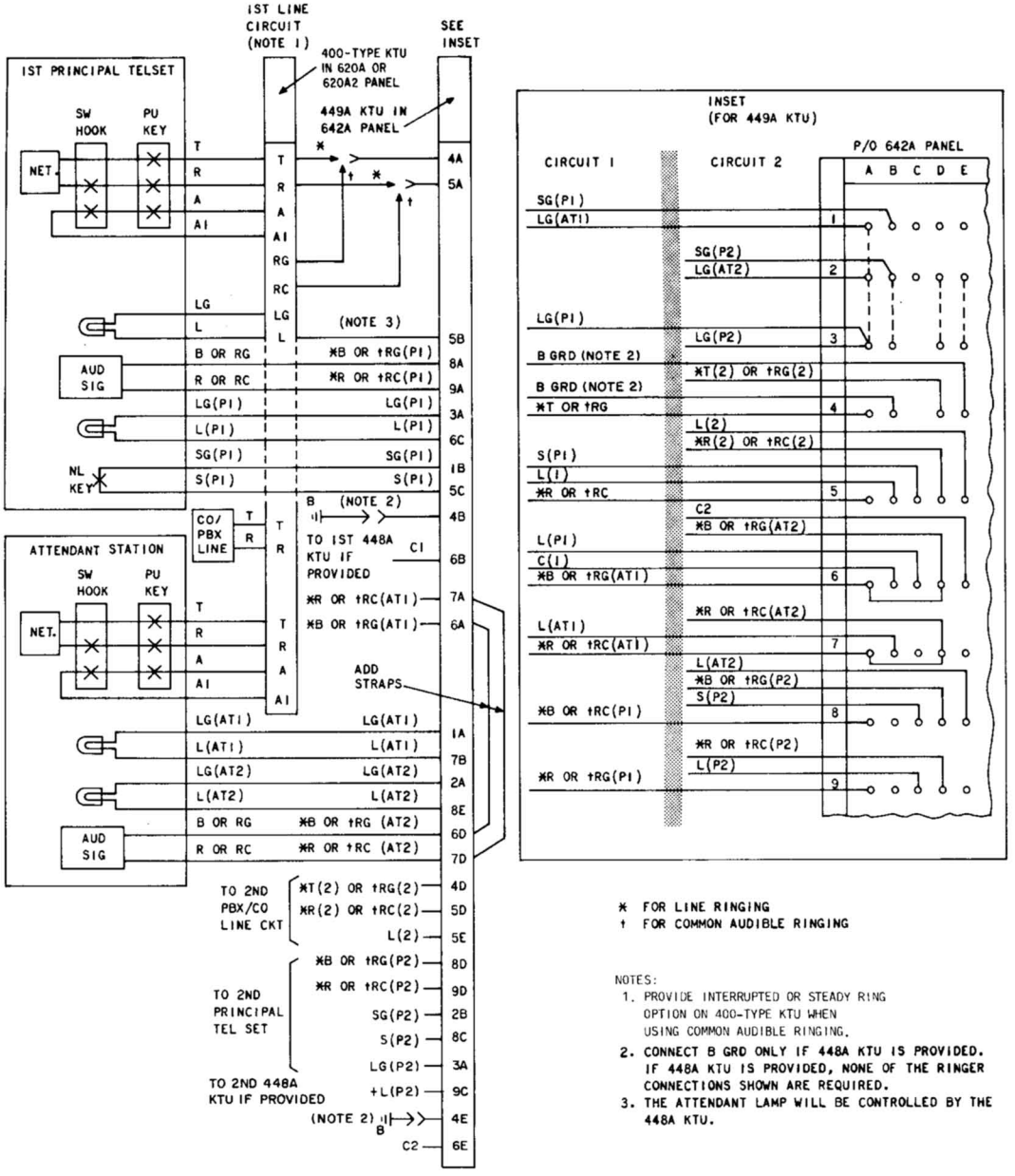

Fig. 47—449A KTU Connections (Immediate Transfer Control) in 642A Modular Panel

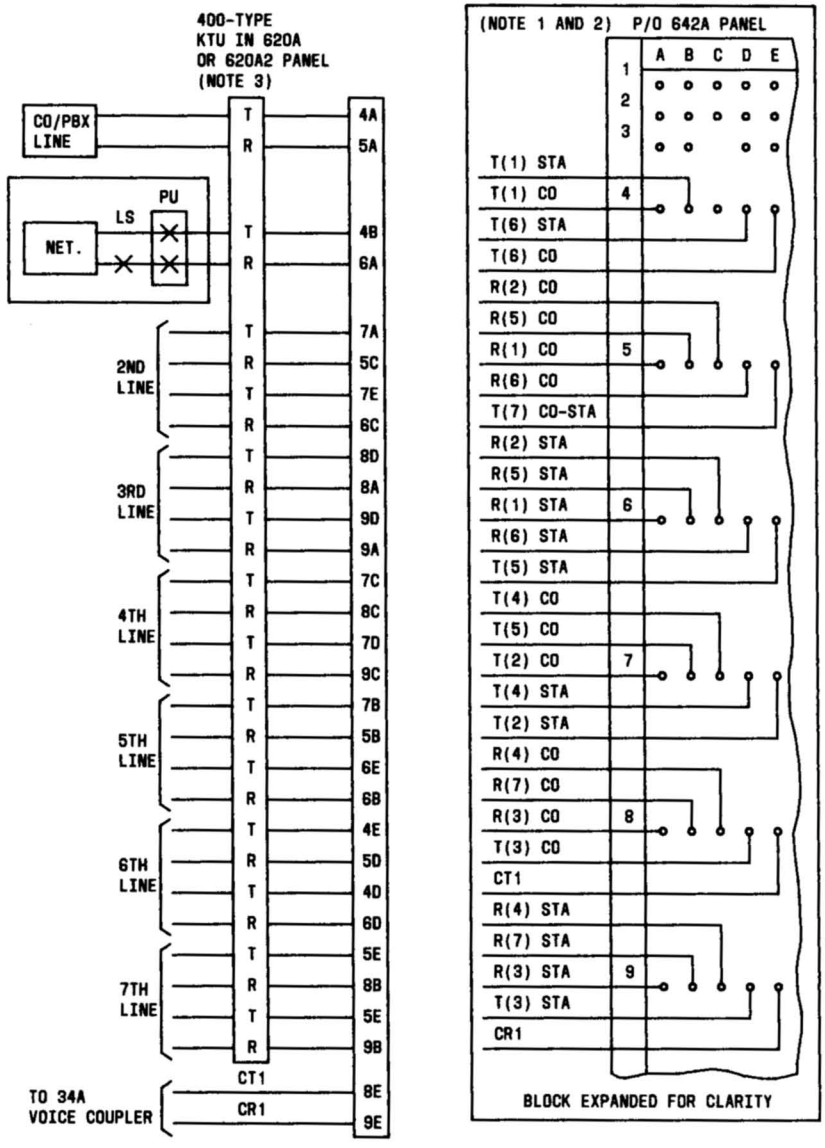

NOTES:
1. DO NOT INSTALL STATUS LAMP FOR JACK CONTAINING 451B KTU
2. USE 183A2 ADAPTER ON TERMINAL 5E FOR T(7) CO AND T(7) STA
3. USE 400D OR G KTU. DO NOT USE 400H

Fig. 48—451B KTU Connections (Music-On-Hold) in 642A Modular Panel

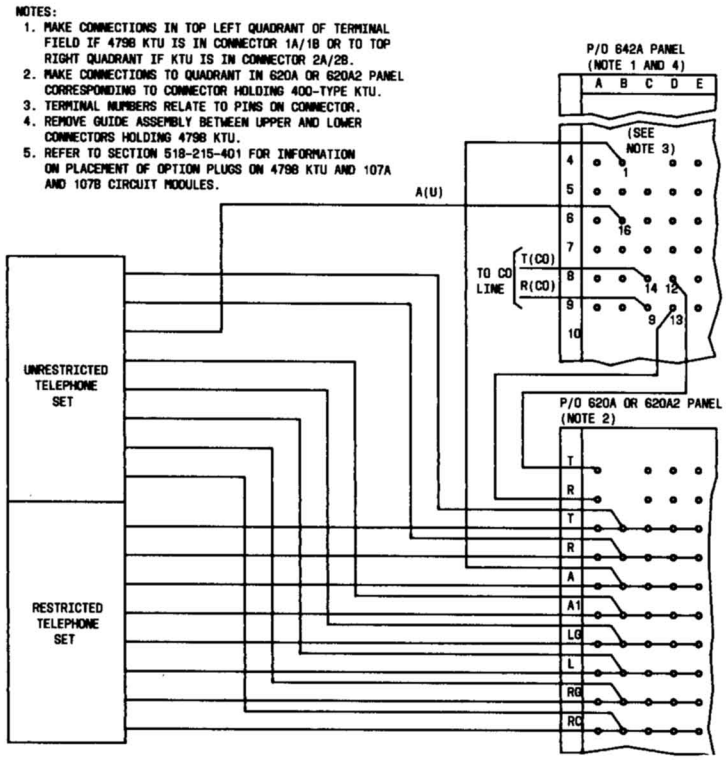

Fig. 49—479-Type KTU Connections (Rotary Dial Toll Restrictions) in 642A Modular Panel

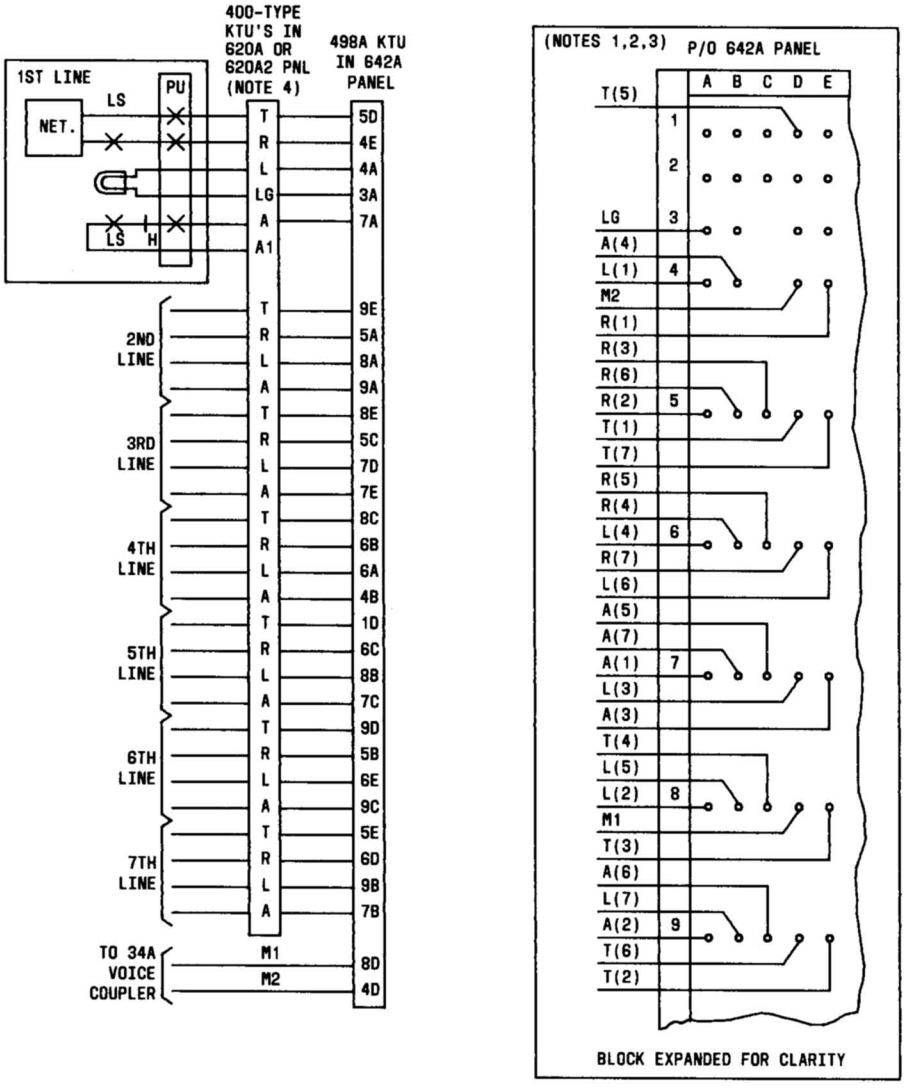

NOTES:
1. EACH 498A KTU CONTAINS FOUR CIRCUITS. TO INCREASE CAPACITY TO SEVEN, ADD 116A1 CM.
2. DO NOT CONNECT ANY SIGNAL VOLTAGE TO TERMINAL 1D OF QUADRANT CONTAINING 498A KTU.
3. DO NOT INSTALL STATUS LAMP FOR JACK CONTAINING 498A KTU.
4. USE A 400D, G, OR H KTU.

Fig. 50—498A KTU Connections (Music-On-Hold) in 642A Modular Panel

N. 451B or 498A KTU—Music-On-Hold Circuit (Fig. 48 or 50)

STEP	ACTION	VERIFICATION
1	Place a call to a CO/PBX line having music-on-hold.	
2	After answering, place line on hold.	Calling party hears music in receiver.
3	Depress winking CO/PBX line button.	Music ceases.
		(END TEST)

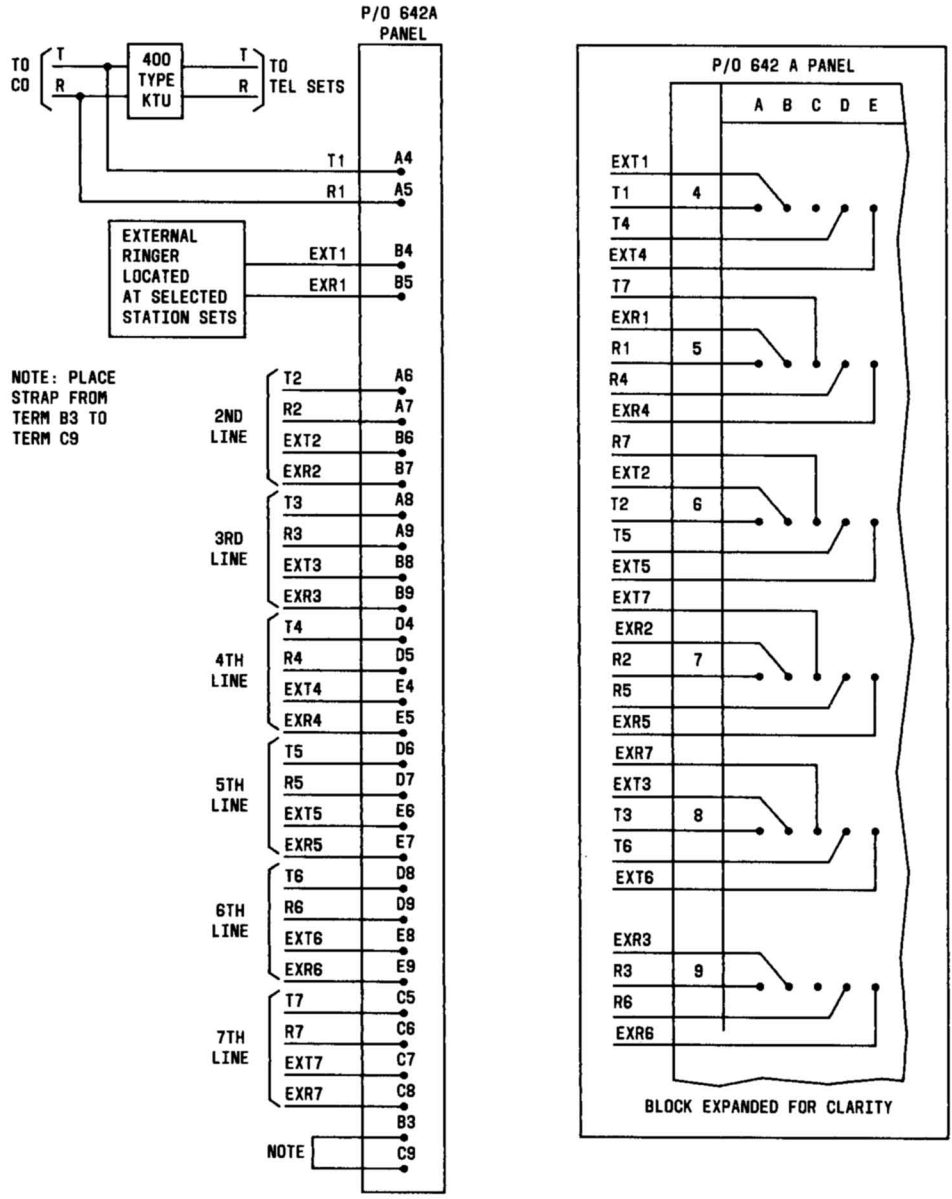

Fig. 51—452A KTU Connections (Power Failure Ringing Circuit) in 642A Modular Panel

O. ◗452A KTU—Power Failure Ringing Circuit (Fig. 51)

STEP	ACTION	VERIFICATION
1	Place a call to a CO/PBX line having a power failure ringer connected to it.	
2	Remove power supply 110-volt ac plug from commercial power outlet.	Power failure ringer will operate.
	Caution: Do not remove 110-volt ac commercial plug if other calls are being processed in the KTS.	
3	Reinsert 110-volt ac plug from power supply into commercial outlet.	(END TEST)◖

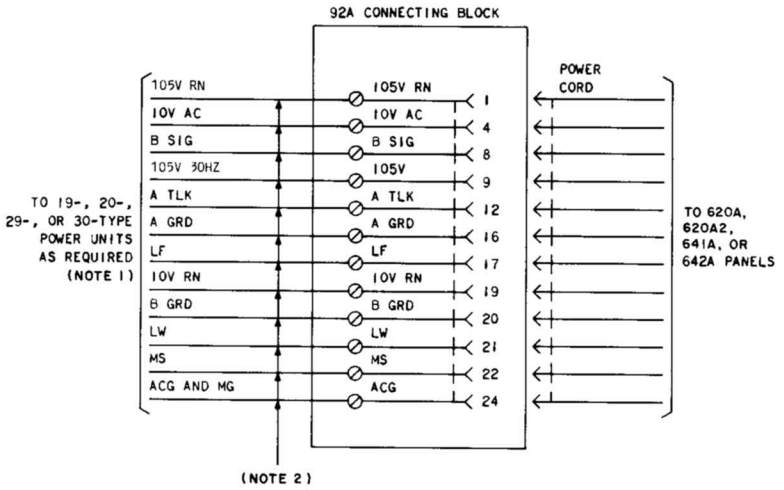

NOTES:
1. INTERRUPTED VOLTAGES, WHEN REQUIRED MUST BE SUPPLIED THROUGH AN INTERRUPTER.
2. REFER TO 3.09(12) FOR WIRING REQUIREMENTS.

Fig. 52—19-, 20-, 29-, or 30-Type Power Unit Connections Using 92A Connecting Block

TABLE I

WIRING BETWEEN 92A CONNECTING BLOCK AND POWER UNIT

LEAD DESIGNATION	D INSIDE WIRING CABLE	451M OR 457M CABLE
A TALK	(W-BL) (BL-W)	(BL)
A GRD	(W-O) (O-W)	(BL-R)
B SIG	(W-G) (G-W)	(O)
B GRD	(W-BR) (BR-W)	(O-R)
10V AC	(W-S) (S-W)	(G)
ACG and MG	(R-BL) (BL-R)	(G-R)
LF	(R-O) (O-R)	(BR)
LW	(R-G) (G-R)	(BR-R)
105V RN	(R-BR) (BR-R)	(S)
10V RN	(R-S) (S-R)	(S-R)
105V 30 Hz	(BK-BL) (BL-BK)	(BL-W)
MS	(BK-0) (0-BK)	(BL-W-R)

SERVICE

1A2 KEY TELEPHONE SYSTEM

69B, D, AND G APPARATUS MOUNTINGS

IDENTIFICATION, INSTALLATION, AND CONNECTION

1. GENERAL

1.001 This addendum supplements Section 518-215-420, Issue 6. Place this pink sheet ahead of Page 1 of the section.

1.002 This addendum is issued to provide additional information relating to the Federal Communications Commission's (FCC) Registration Program.

2. CHANGES TO SECTION

2.001 On Page 2, following paragraph 1.03, revise text as follows:

1.04 Incoming central office (CO) lines to be installed in compliance with the FCC Registration Program must be routed through a standard network interface. Information on approved interfaces is contained in Sections 463-400-100 through 463-400-150.

1.05 After January 1, 1980, connection of customer-provided equipment (CPE) or telephone company-provided equipment to the 1A2 Key Telephone System (KTS) requires the use of a 33B voice coupler when providing music-on-hold. Also after January 1, 1980, the 401B, 415B, 471C, and 479C key telephone units (KTUs) must be used when providing their related services. Previously connected or Class C voice couplers and KTUs may be used for additions and maintenance at grandfathered installations for the life of the equipment, provided they are not modified. Class C stock may also be used in new installations after January 1, 1980.

NOTICE
Not for use or disclosure outside the
Bell System except under written agreement

SERVICE

1A2 KEY TELEPHONE SYSTEM

69B, D, AND G APPARATUS MOUNTINGS

IDENTIFICATION, INSTALLATION, AND CONNECTION

1. GENERAL

1.01 This section contains information for the 69B, D, and G apparatus mountings used in the 1A2 Key Telephone System (KTS).

1.02 This section is reissued to:

- Add information on the treatment of central office (CO) lines under the Federal Communication Commission (FCC) Registration Program
- Rerate 419A KTU from AT&TCo Standard to Manufacture Discontinued (MD)
- Add 419B KTU—Automatic Signaling, Ringdown Private Line Circuit
- Add 494A KTU—TOUCH-TONE® Selector (Fig. 6 revised and new Fig. 39 added)
- Add 440A (MD) and 478B KTU—TOUCH-TONE Adapters
- Remove information on the 470A KTU which was never manufactured
- Add 451A and 498A KTUs—Music-On-Hold Circuits
- Add 471B KTU—Battery Reversal Toll Restriction Circuit
- Add 479B Rotary Dial Toll Restriction Circuit
- Revise Table A to include these KTUs.

1.03 This issue of the section is based on the following drawings:

SD-69475, Issue 6—401A KTU

SD-69489, Issue ▶6◀ —428A KTU

SD-69513, Issue 15—400D (MD) KTU

SD-69530, Issue ▶9◀ —429C and 430A KTUs

SD-69559, Issue ▶10◀ —414A, 415A, 416A, 418A, 419-type, 461A, and 469A KTUs

SD-69561, Issue 2—417A KTU

SD-69567, Issue ▶15◀ —407B (MD), 407C, 420A, 422B, 423A, 424A (MD), 424B (MD), 424C, 425B, and ▶494A◀ KTUs

SD-69590, Issue ▶3◀ —413A, 421A, 448A, and 449A KTUs

SD-69595, Issue ▶10◀ —426A and 427C KTUs

SD-69651-01, Issue ▶5◀ —400G (MD) KTU

SD-69906-01, Issue 4—440A KTU

SD-69917, Issue 1—467A KTU

SD-69921-01, Issue ▶3◀ —471-type and 479-type KTUs

▶SD-69922, Issue 3—451A and 498A KTU

SD-69942, Issue 2—400H KTU◀

SD-69599, Issue ▶3◀ —69-Type Apparatus Mounting

NOTICE
Not for use or disclosure outside the
Bell System except under written agreement

SD-69931, Issue 4—478B KTU

If this section is to be used with equipment or apparatus reflecting later issues of the drawings, reference should be made to the SDs to determine the extent of the changes and the manner in which the section may be affected.

1.04 Incoming CO lines to be installed in compliance with the FCC Registration Program must be routed through a standard network interface. Information on approved interfaces is contained in Section 461-640-105, entitled Connecting Blocks, 66M3-50R, Identification, Installation, and Maintenance.

2. IDENTIFICATION

2.01 ***Purpose:*** The purpose of the 69B, D, and G apparatus mountings is to provide alternative mounting facilities for 400-series KTUs in centralized installations of the 1A2 KTS in conjunction with 584-type panels.

2.02 ***Ordering Guide***

(a) ***Basic Units***

- Mounting, Apparatus, 69B
- Mounting, Apparatus, 69D
- Mounting, Apparatus, 69G

(b) ***Replaceable Optional Components***

- Assembly, Guide, 834055907 (P-40V590)
- Assembly, Tab, 834481699 (P-44Y169)
- Strip, Designation, 834481673 (P-44Y167)

(c) ***Associated Apparatus or Equipment (order separately)***

- Block, Connecting, 66B4-25 (as required)
- Bracket, Mounting, 99A (MD) or B
- Cable, Connector, A25B (as required)
- Unit, Telephone, Key (as required, see Table A).

2.03 ***Design Features***

(a) Equipped with two connectors aligned vertically to accommodate one 8-inch KTU or [by adding an 834055907 (P-40V590) guide assembly which must be ordered separately] two 4-inch KTUs (Table A).

(b) The 69B apparatus mounting consists of two 913A (20-pin) connectors wired to a KS-16671,L1 plug mounted on the back of the apparatus mounting (Fig. 1).

(c) The 69D or G apparatus mounting consists of two 914A (40-pin) connectors wired to two KS-16671,L1 plugs mounted on the back of the apparatus mounting (Fig. 2).

(d) Tab assemblies hold the KTUs in place and provide mountings for designation strips.

(e) The same numbered pins of each connector on which the 11 dedicated leads (BAT, GRD, LF, LW, etc) appear are strapped between the two connectors, and each dedicated lead is then brought out on one conductor.

(f) The 69B, D, and G apparatus mountings are wired for those 400-series KTUs indicated by a bullet (•) in Table A.

(g) The 69B, D, and G apparatus mountings are designed for frame mounting with a 99A (MD) or B bracket (Fig. 3). Mounting screws are furnished with each apparatus mounting.

Note: The 99A (MD) or B bracket consists of two 23-inch mounting bars on which a maximum of 12 apparatus mountings may be installed. The upper bar includes cable supports which retain the connector cables. The bracket requires a 9-inch vertical mounting space.

(h) The A25B connector cables are required to extend the mountings to distributing terminals.

3. INSTALLATION

PLANNING

3.01 Select the type apparatus mounting(s) required for specific KTUs to be used per Table A.

♦TABLE A♦

ARRANGEMENT OF 400 SERIES KTUs IN 69-TYPE APPARATUS MOUNTINGS

KTU	FUNCTION	SIZE (IN.)	PINS	APPARATUS MOUNTING			REMARKS
				69B	69D	69G	
400-Type	CO or PBX Line Circuit	4	18	●	●	*	When the 417A, 420A, or 421A KTU is used in the 69-type apparatus mountings, the cable run from the apparatus mounting to the connecting block should be as short as possible, preferably not longer than 10 feet to reduce the possibility of noise pickup on unpaired leads.
401A	Manual Intercom Line Ckt	4	18	●	●	*	
407B (MD) or 407C	Dial Intercom 10-Code Selector Circuit	8	80	*	*	●	
413A	Auxiliary Ringup Circuit	4	18	●	●	*	
414A	Manual Signaling, Ringdown Private Line Circuit	4	20	●	●	*	
415A	Automatic DC Signaling, Private Line Circuit	4	18	●	●	*	When a 400H KTU is used as a line circuit and line will be equipped with music-on-hold, a 498A KTU must be used for music-on-hold as the 400H is not compatible with 451-type KTUs.
416A	Station Line Circuit	4	20	●	●	*	
417A	Add-on Conference Ckt	4	40	*	●	*	
418A	Short Range, DC Signaling, Private Line Circuit	4	20	●	●	*	
419A (MD) or 419B	Automatic Signaling, Ringdown Private Line Circuit	8	20	●	●	*	
420A	Long Line Circuit	4	18	●	●	*	
421A	Power Failure Transfer Ckt, General Purpose Relay or Audible Signal Suppressor	4	40	†	●	*	*Note:* WORKING LIMITS: The maximum permissible length of cable run for the lamp feeder pairs (10V±, LW, LF) is determined by the lamp load. For a load of 20 lamps, the run from apparatus mounting to power supply shall be a maximum of 30 feet. For lesser loads, the length of run may be increased proportionately.
422B	Station Busy Selector Ckt	4	40	*	●	*	
423A	Dial Tone, Busy Tone, and Audible Ringback Tone Ckt	4	20	●	●	*	
424A (MD) 424B (MD), or 424C	Dial Intercom 19-Code Selector Circuit	8	80	*	*	●	
425A (MD) or 425B	Flashing Lamp Circuit	8	80	*	*	●	
426A	TOUCH-TONE Adapter Ckt	8	80	*	●	*	
427B (MD) (Series 4) or 427C		8	80	*	●	*	
428A	Multiline Exclusion Ckt	4	40	*	●	*	
429A (MD), 429B (MD), or 429C	Supplementary Hold Detector Circuit	4	40	*	●	*	
430A	Flutter Generator Circuit	4	20	●	●	*	
440A (MD)	TOUCH-TONE Adapter Circuit	8	80	*	●	*	

TABLE A (Contd)

ARRANGEMENT OF 400 SERIES KTUs IN 69-TYPE APPARATUS MOUNTINGS

KTU	FUNCTION	SIZE (IN.)	PINS	APPARATUS MOUNTING			REMARKS
				69B	69D	69G	
448A	Variable Delay-Timer Circuit	4	40	*	●	*	
449A	Immediate Transfer Cont Ckt	4	40	*	●	*	
451A (MD) or 451B	Music-On-Hold Circuit	4	40	*	●	*	
461A	Manual Signaling, Ringdown Private Line Circuit	4	20	●	●	*	
467A	Voltage Monitor Circuit	4	18	●	●	*	
469A	Lamp Extender Circuit	4	18	●	●	*	
471A (MD) or 471B	Bat. Reversal Toll Rstcn Ckt	4	18	●	●	*	
478B	TOUCH-TONE Adapter Circuit	8	80	●	●	*	
479B	Rot. Dial Toll Rstcn Ckt	8	20	*	●	*	
494A	TOUCH-TONE Selector	8	80	*	*	●	
498A	Music-On-Hold Circuit	4	40	*	●	*	

* Not usable.

● Usable.

† Restricted to transfer of one station ringer.

3.02 Apparatus mountings, connecting blocks, and power supply should be located with as short a distance between them as possible.

3.03 Verify that fusing requirements for the apparatus mountings can be met. See Table B for fusing requirements.

INSTALLING

3.04 If the 69-type apparatus mounting is to be installed in a cabinet, 16C apparatus mounting, or relay rack, install the 99A (MD) or B brackets (Fig. 3).

3.05 Install the 69-type apparatus mounting (using mounting hardware furnished).

3.06 Install the necessary 66B4-25 connecting blocks at the distribution point.



In installations where a number of 69-type apparatus mountings are installed, be sure to identify each connecting block with its associated apparatus mounting.

3.07 Connect the A25B connector cables to the apparatus mountings and route to the distributing point.

3.08 Cut down the A25B connector cables on the 66B4-25 connecting blocks as shown in Fig. 4, 5, and 6 for the 69B, D, and G apparatus mountings, respectively. Figures 4, 5, and 6 also contain schematics and block diagrams showing typical layouts of the apparatus mountings.

3.09 Dedicated lead connections for the 69B and D apparatus mountings are shown in Fig. 7. These connections should be made before installing KTUs in the apparatus mountings. Dedicated lead

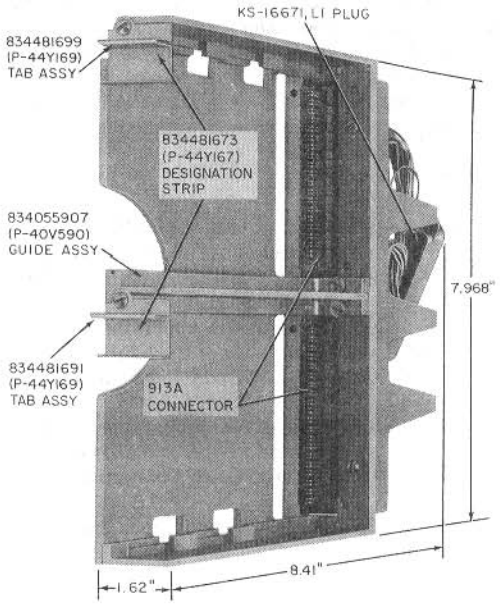

Fig. 1—69B Apparatus Mounting (With Guide Assembly)

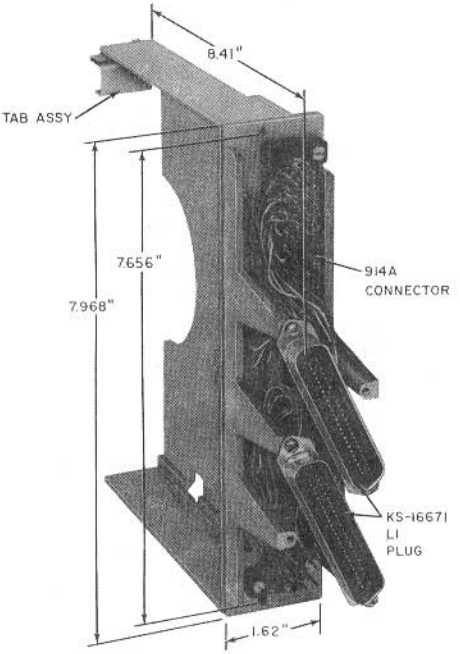

Fig. 2—69D or 69G Apparatus Mounting (Without Guide Assembly)

connections for the 69G apparatus mountings are shown in various figures covering the connections for dial intercom. Dedicated leads are those leads, such as BAT, GRD, LF, LW, etc, that appear on the same numbered pin of each KTU.

4. CONNECTIONS

4.01 Figures 8 through 38 show the nondedicated lead connections of the 400-series KTUs that can be installed in the 69B and D apparatus mountings. Each figure is divided into three sections: field connections are shown on the left, row assignments in the center, and pin numbers of the connector on the right. Pin numbers are shown for reference only so that a complete picture of the KTU circuitry can be seen when the connection drawing of any KTU is compared to the functional schematic.

4.02 Field connections are made for any KTU by determining the connector used (connector A or B) and the connecting block on which the connector appears. For example (see Fig. 8), if a 400-type KTU is installed in connector A of a 69B apparatus mounting, field connections are made to the rows shown in column 1. If a 400-type KTU is installed in connector B, field connections are made to the rows shown in column 2. If a 400-type KTU is installed in connector A or B of a 69D apparatus mounting, field connections are made to the rows shown in column 1, with the connections to connector A made to block 1 and the connections to connector B made to block 2.

4.03 Figures 39, 40, and 41 show power supply connections and strapping required to furnish a basic dial intercom, using a 407B (MD), 407C, 424A (MD), 424B (MD), 424C, and 494A KTU. Figure 42 covers the station connections and Table C covers the necessary connections to optional KTUs.

4.04 Figures 43 and 44 show the power supply and strapping required to furnish a deluxe dial intercom, using a 407B (MD), 407C, 424A (MD),

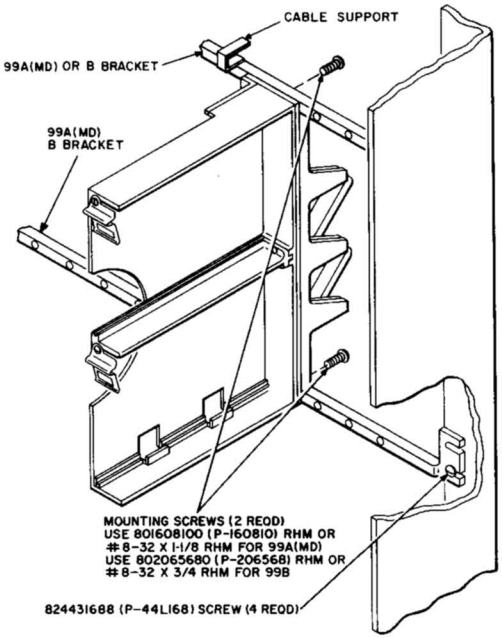

Fig. 3—69B, 69D, or 69G Apparatus Mounting on a 99A (MD) or 99B Bracket

424B (MD), or 424C KTU. Figure 45 shows the connections required when a 425B KTU is installed in a 69G apparatus mounting for a deluxe dial intercom system. Figure 46 shows the station connections, and Table D or E shows the necessary connections to associated and optional KTUs.

CONNECTION INDEX

Fig. 4—Schematic of 69B Apparatus Mounting and Connections of the A25B Connector Cable to a 66B4-25 Connecting Block

Fig. 5—Schematic of 69D Apparatus Mounting and Connections of the A25B Connector Cable to a 66B4-25 Connecting Block

Fig. 6—Schematic of 69G Apparatus Mounting and Connections of the A25B Connector Cable to a 66B4-25 Connecting Block

Fig. 7—Dedicated Lead Connections (Interrupter and Power) for 69B and 69D Apparatus Mountings.

Nondedicated Lead Connections for:

Fig. 8—400D (MD) KTU (CO or PBX Line Circuit) in 69B or 69D Apparatus Mounting

TABLE B

FUSING FOR 69-TYPE APPARATUS MOUNTINGS

FUNCTION	FUSE SIZE (AMP)	VOLTAGE	NUMBER OF FUSES NEEDED
Lamp steady (10V±)	2	10Vac	One per 50 lamps
Lamp flash (LF)	2	10Vac	
Lamp wink (LW)	2	10Vac	
Ringing (105V±)	.5	105Vac	As determined by total load connected to supply
Buzzer (18V±)	.5	18Vac	
Talk battery (BAT. A)	1-1/3	24Vdc	
Signal battery (BAT. B)	1-1/3	24Vdc	

Fig. 9—400G (MD) KTU (CO or PBX Line Circuit) in 69B or 69D Apparatus Mounting

Fig. 10—400H KTU (CO or PBX Line Circuit) in 69B or 69D Apparatus Mounting

Fig. 11—401A KTU (Manual Intercom Line Circuit) in 69B or 69D Apparatus Mounting

Fig. 12—413A KTU (Auxiliary Ringup Circuit) in 69B or 69D Apparatus Mounting

Fig. 13—414A KTU (Manual Signaling, Ringdown Private Line Circuit) in 69B or 69D Apparatus Mounting

Fig. 14—415A KTU (Automatic, DC Signaling Private Line Circuit) in 69B or 69D Apparatus Mounting

Fig. 15—416A KTU (Station Line Circuit) in 69B or 69D Apparatus Mounting

Fig. 16—417A KTU (Add-on Conference Circuit) in 69D Apparatus Mounting

Fig. 17—418A KTU (Short Range, DC Signaling Private Line Circuit) in 69B or 69D Apparatus Mounting

Fig. 18—419-Type KTU (Automatic Signaling, Ringdown Private Line Circuit) in 69B or 69D Apparatus Mounting

Fig. 19—420A KTU (Long Line Circuit) in 69B or 69D Apparatus Mounting

Fig. 20—421A KTU (Power Failure Transfer Circuit) in 69B or 69D Apparatus Mounting

Fig. 21—421A KTU (Wired for DSS Feature) in 69D Apparatus Mounting

Fig. 22—421A KTU (Used as Audible Signal Suppressor) in 69D Apparatus Mounting

Fig. 23—422B KTU (Station Busy Selector Circuit) in 69D Apparatus Mounting

Fig. 24—423A KTU (Dial, Busy and Audible Ringback Tone Circuit) in 69B or 69D Apparatus Mounting

Fig. 25—426A, 427B (MD) (Series 4), or 427C KTUs (TOUCH-TONE Adapter Circuit) in 69D Apparatus Mounting

Fig. 26—428A KTU (Multiline Exclusion Circuit) in 69D Apparatus Mounting

Fig. 27—429-Type KTU (Supplementary Hold Detector Circuit) in 69D Apparatus Mounting and 430A KTU (Flutter Generator Circuit) in 69B or 69D Apparatus Mounting

Fig. 28—448A KTU (Variable Delay Timer Circuit) in 69D Apparatus Mounting

Fig. 29—449A KTU (Immediate Transfer Control Circuit) in 69D Apparatus Mounting

Fig. 30—▶451B KTU (Music-On-Hold Circuit) in 69D Apparatus Mounting◀

Fig. 31—Preset Conference Circuit of a Deluxe Dial Intercom Line (421A KTU in 69D Apparatus Mounting and a 413A KTU in a 69B or 69D Apparatus Mounting)

Fig. 32—461A KTU (Manual Signaling, Ringdown Private Line Circuit) in 69B or 69D Apparatus Mounting

Fig. 33—467A KTU (Voltage Monitor Circuit) in 69B or 69D Apparatus Mounting

Fig. 34—469A KTU (Lamp Extender Circuit) in 69B or 69D Apparatus Mounting

Fig. 35—471A (MD) or 471B KTU (Battery Reversal Toll Restriction Circuit) in 69B or 69D Apparatus Mounting

Fig. 36—▶440A (MD) or 478B KTU (TOUCH-TONE Adapter Circuit) in 69D Apparatus Mounting◀

Fig. 37—▶479A (MD) and 479B KTU (Rotary Dial Toll Restriction Circuit) in 69D Apparatus Mounting◀

Fig. 38—498A KTU (Music-On-Hold Circuit) Equipped With a 116A1 Circuit Module in 69D Apparatus Mounting

Basic Dial Intercom

Fig. 39—Strapping and Power Supply Connections for 407B (MD) or 407C KTU

Fig. 40—Strapping and Power Supply Connections for 424A (MD), 424B (MD), or 424C KTU

Fig. 41—Strapping and Power Supply Connections for 494A KTU

Fig. 42—Station Connections

Table C—Connections From 407-Type or 424-Type KTU to Optional KTUs

Deluxe Dial Intercom

Fig. 43—Strapping and Power Supply Connections for 407B (MD) or 407C KTU

Fig. 44—Strapping and Power Supply Connections for 424A (MD), 424B (MD), or 424C KTU

Fig. 45—Strapping and Power Supply Connections for 425A (MD) or 425B KTU

Fig. 46—Station Connections

Table D—Connections From 407-Type KTU to Associated and Optional KTUs

Table E—Connections From 424-Type KTU to Associated and Optional KTUs

TABLE C

BASIC DIAL INTERCOM CONNECTIONS FROM 407-TYPE OR 424-TYPE KTU TO OPTIONAL KTUs

LEAD DESIG 407- OR 424- TYPE	66B4-25 CONN BLKS 407- OR 424-TYPE KTU ROW AND COLUMN ASSIGNMENT		OPTIONAL KTUS			
			420A KTU	421A KTU* (DSS)	"TOUCH-TONE"	
	BLK 1	BLK 2			426A	427B, SERIES 4 OR 427C
T	1A-E		•		•	
R	2A-E		•		•	
Y1	45A-E			•		•
Y2	46A-E			•		•
Y3	47A-E			•		•
LR, Y4	48A-E			•		•
Y5	49A-E			•		•
J	50A-E					
RS1		10F-B				•
LT2†		13F-B		•		
TTG		14F-B	•		•	•
RH		17F-B		•		•
CG		18F-B		•		•
B (1-XO)	As assigned for station connection (See Fig. 42)		•			
R (1-XO)			•			

* Connect required leads per Fig. 21

† Connect only when 424-type KTU provided.

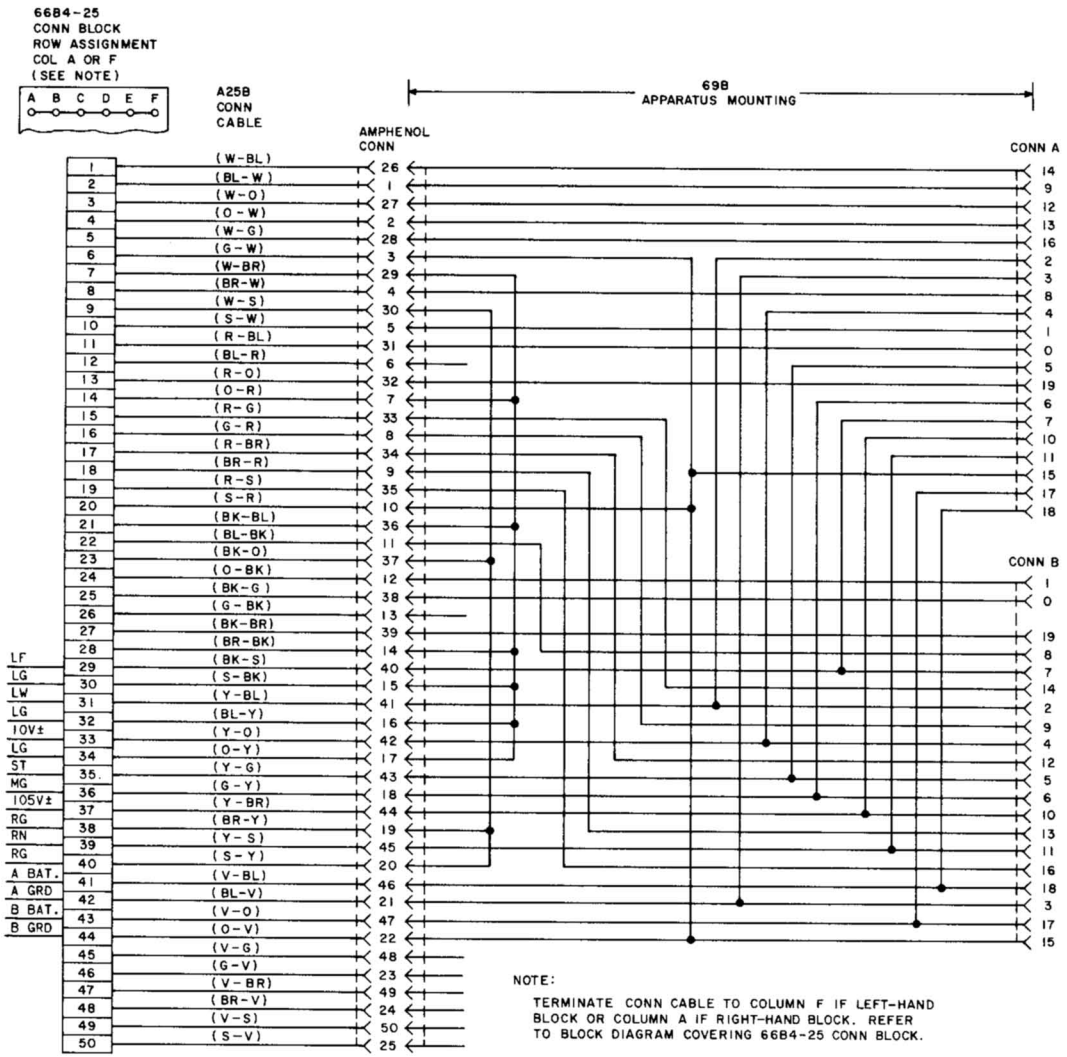

Fig. 4—Schematic of 69B Apparatus Mounting and Connections of the A25B Connector Cable to a 66B4-25 Connecting Block (Sheet 1 of 2)

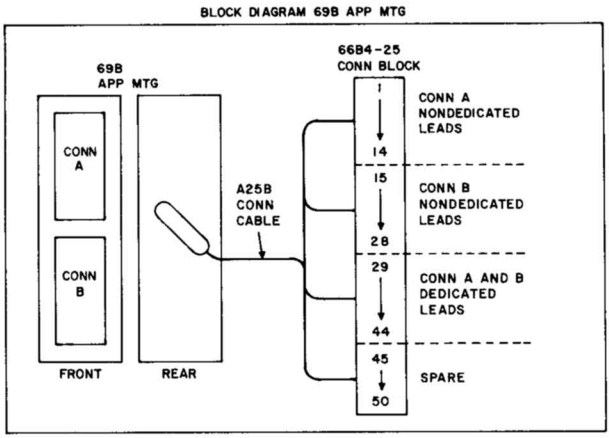

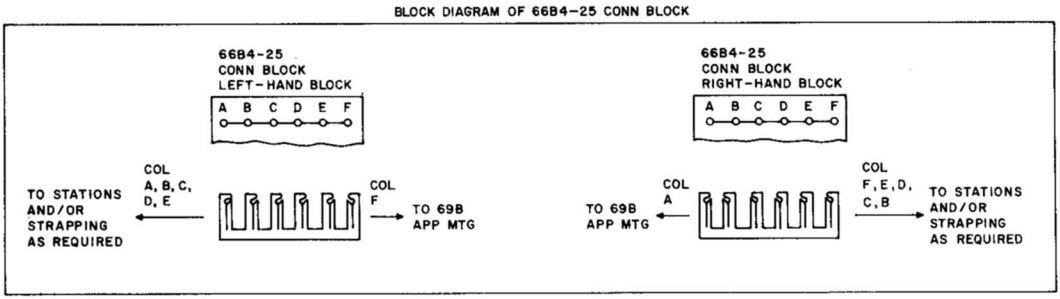

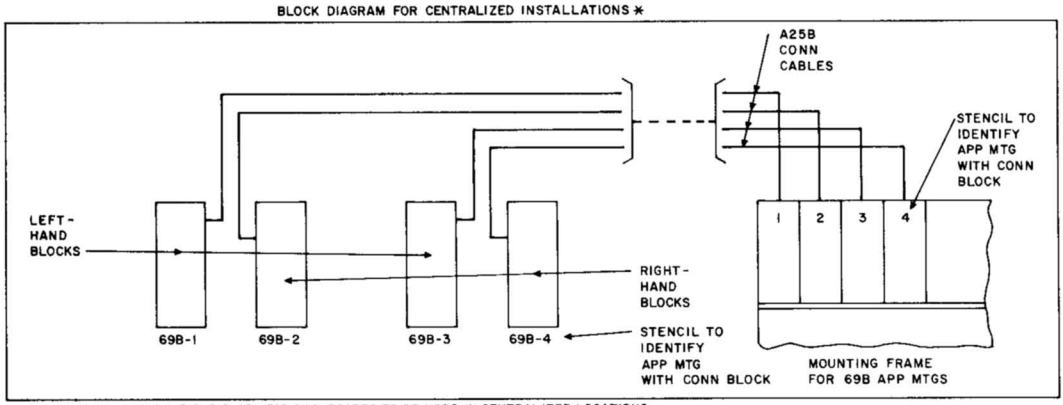

* REFER TO SECTION 518-010-101 FOR BACKBOARDS TO BE USED IN CENTRALIZED LOCATIONS

Fig. 4—Schematic of 69B Apparatus Mounting and Connections of the A25B Connector Cable to a 66B4-25 Connecting Block (Sheet 2 of 2)

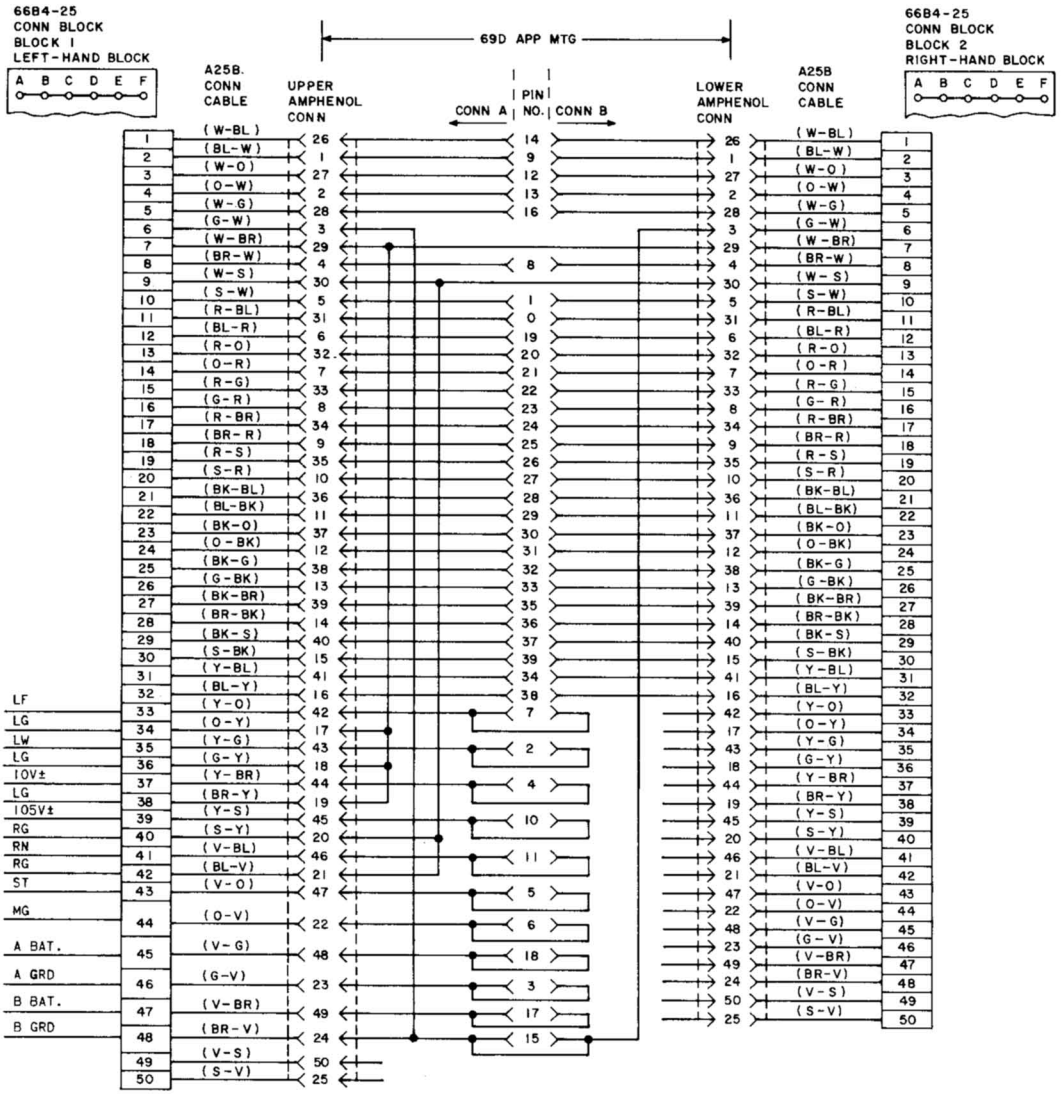

Fig. 5—Schematic of 69D Apparatus Mounting and Connections of the A25B Connector Cable to a 66B4-25 Connecting Block (Sheet 1 of 2)

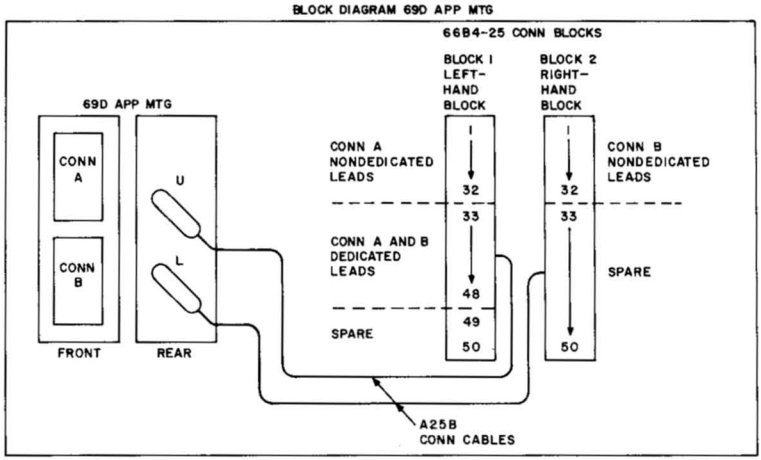

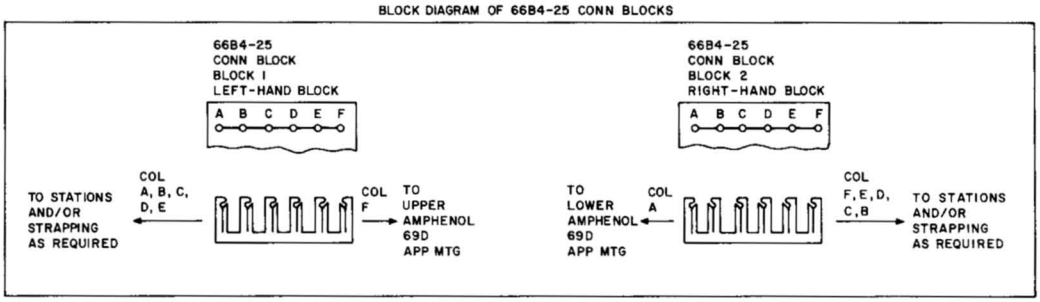

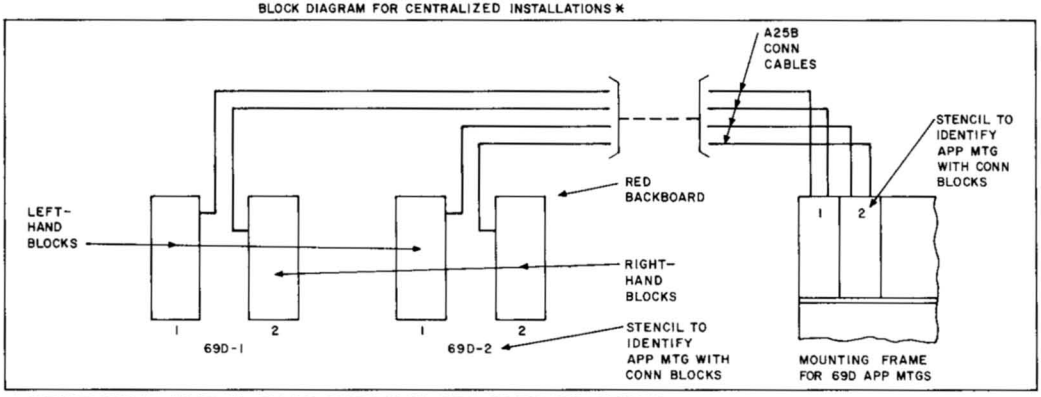

* REFER TO SECTION 518-010-101 FOR BACKBOARDS TO BE USED IN CENTRALIZED LOCATIONS.

Fig. 5—Schematic of 69D Apparatus Mounting and Connections of the A25B Connector Cable to a 66B4-25 Connecting Block (Sheet 2 of 2)

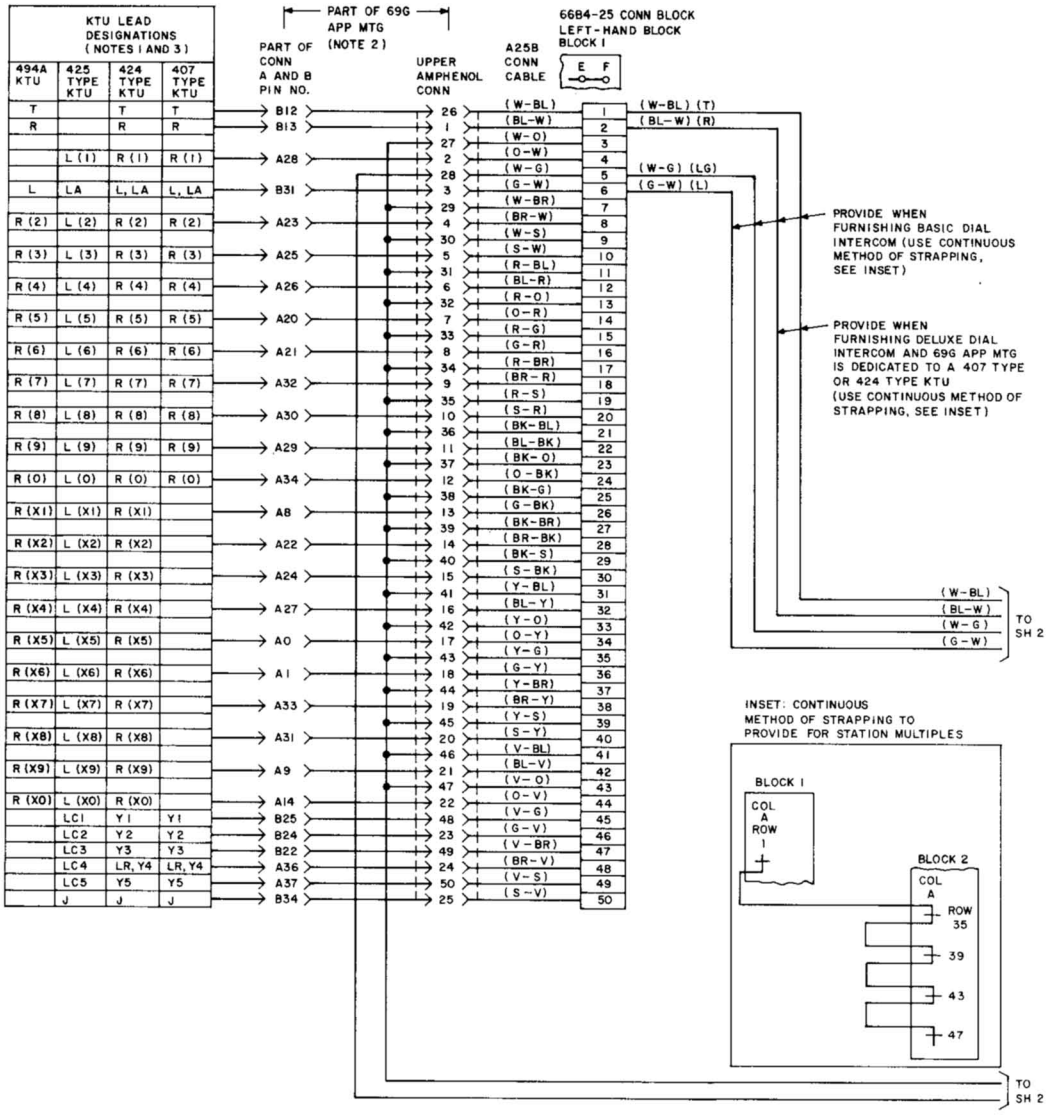

Fig. 6—Schematic of 69G Apparatus Mounting and Connections of the A25B Connector Cable to a 66B4-25 Connecting Block (Sheet 1 of 2)

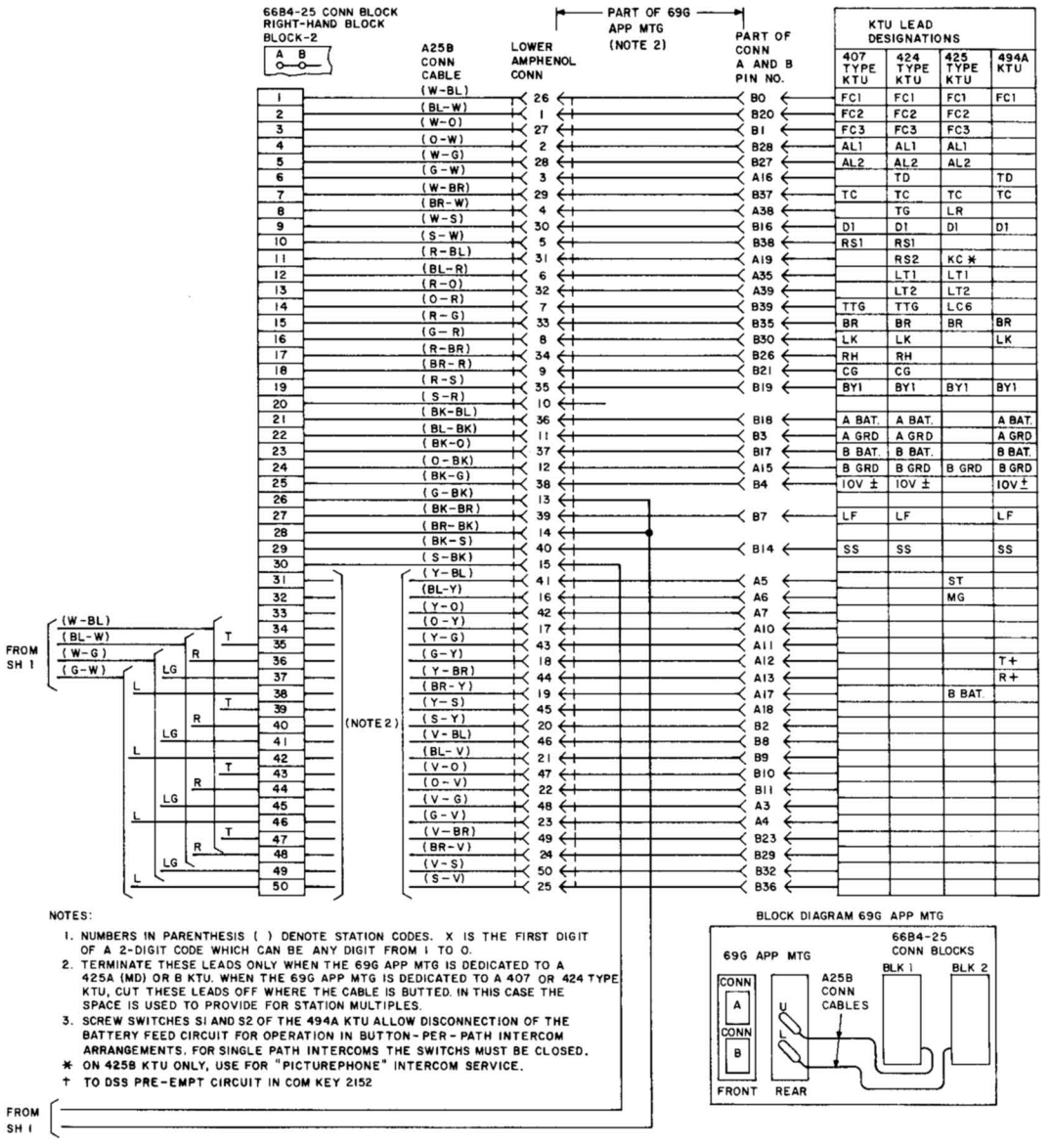

Fig. 6—Schematic of 69G Apparatus Mounting and Connections of the A25B Connector Cable to a 66B4-25 Connecting Block (Sheet 2 of 2)

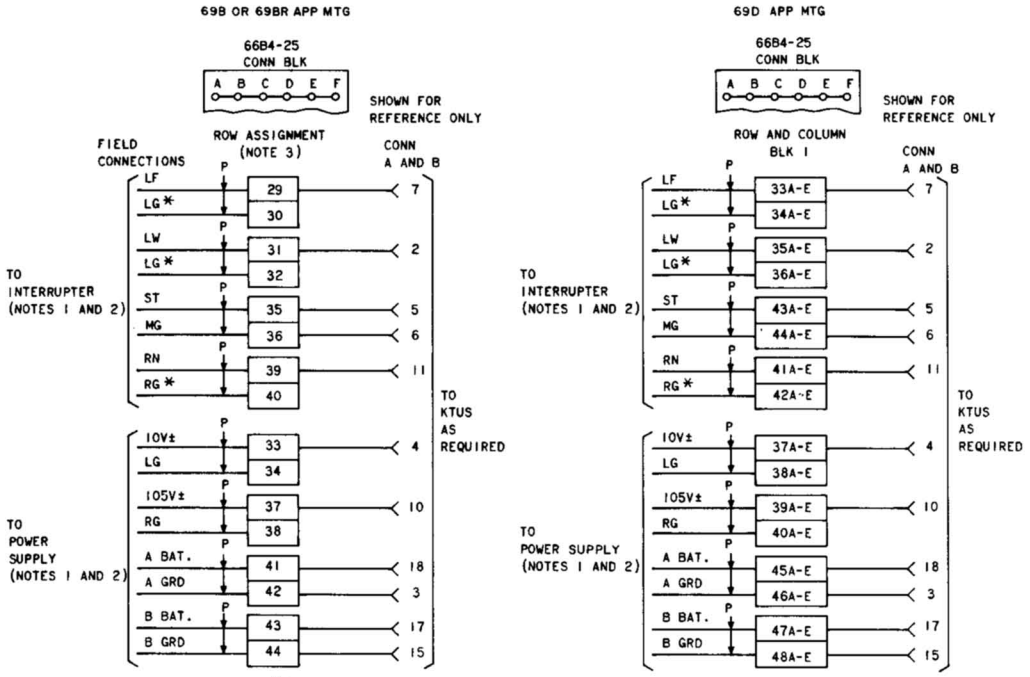

*THESE LEADS USED FOR BALANCING PURPOSES TO PREVENT INDUCED NOISE. THEY MUST BE TERMINATED TO APPROPRIATE GROUND TERMINAL ON PANEL NEAR THE INTERRUPTER.

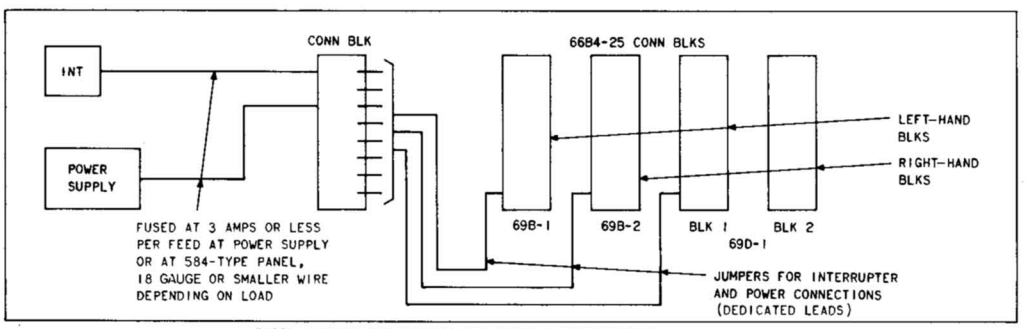

BLOCK DIAGRAM FOR CENTRALIZED INSTALLATION (NOTE 4)

NOTES:

1. CONNECT AS REQUIRED (FUSE WHERE NEEDED) SO AS NOT TO EXCEED THE MAXIMUM LOAD LIMITATIONS OF THE POWER SUPPLY.
2. THESE LEADS MAY BE MULTIPLED FROM BLOCK TO BLOCK PROVIDING THE LIMITATION OF THE POWER SUPPLY IS NOT EXCEEDED.
3. COLUMN ASSIGNMENT FOR LEFT-HAND BLOCK IS COLUMN A-E AND FOR RIGHT-HAND BLOCK IS COLUMN F-B. SEE BLOCK DIAGRAM COVERING 6684-25 CONN BLK IN FIG. 4 OR 5.
4. REFER TO SECTION 518-010-101 FOR BACKBOARDS TO BE USED IN CENTRALIZED INSTALLATIONS.

Fig. 7—Dedicated Lead Connections (Interrupter and Power) for 69B and 69D Apparatus Mountings

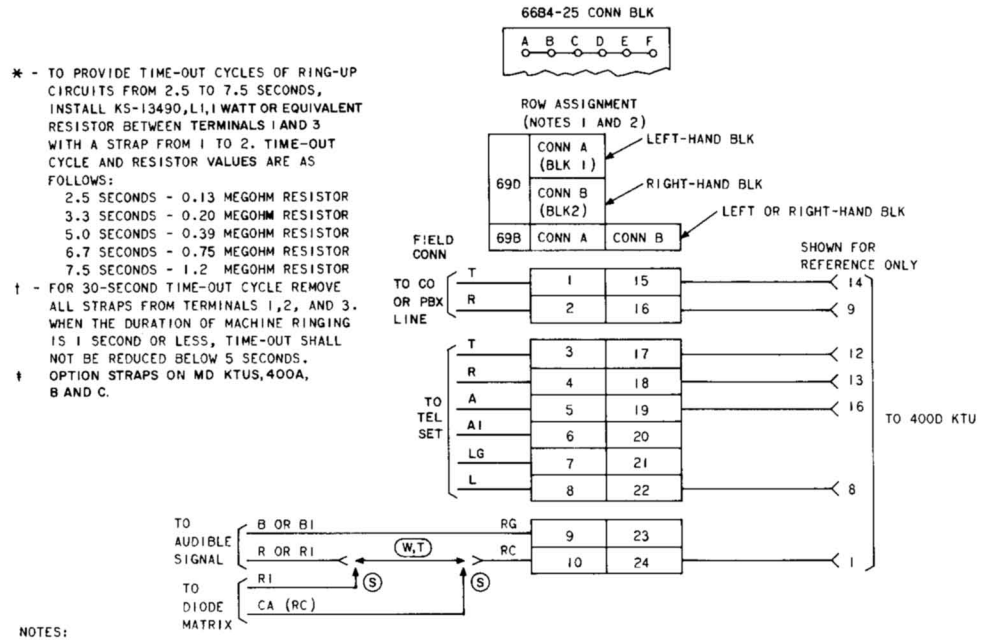

NOTES:

1. COLUMN ASSIGNMENT FOR LEFT-HAND BLK IS COLUMN A-E AND FOR RIGHT-HAND BLK IS COLUMN F-B. SEE BLOCK DIAGRAM COVERING THE 66B4-25 CONN BLK IN FIG. 5 OR 7.
2. TERMINATE DEDICATED LEADS PER FIG. 9.
3. WHEN ZC OPTION IS USED, DUE TO THE DELAYED RELEASE OF THE HOLD BRIDGE, SOME TRANSMISSION LOSS IS ENCOUNTERED FOR APPROXIMATELY ONE SECOND WHEN STATION REENTERS A HELD CALL.
4. (V) OPTION (TERM.4-8) MAY BE USED IN LOCALLY ENGINEERED ARRANGEMENTS ON RELAY COMMON AUDIBLE ARRANGEMENTS.

OPTION STRAPPING ON 400D (MD) KTU OPTION BLK

OPTION	FEATURES		STRAP TERMINALS
W	AUDIBLE SIGNALS	INTERRUPTED RING	5 TO 8, ‡5 TO 6
T		STEADY RING	6 TO 8, ‡4 TO 6
S		COMMON WITH DIODE MATRIX CONTROL	5 TO 8, ‡5 TO 6
Y	VISUAL HOLD CIRCUIT	LAMP WINK	7 TO 10, ‡8 TO 9
X		LAMP STEADY	7 TO 9, ‡7 TO 9
Z*	TIME-OUT CONTROL	SHORT TIME DELAY (10 SECONDS)	1 TO 2, ‡1 TO 9
†		LONG TIME DELAY	†
ZC (NOTE 3)	RELEASE OF HOLDING BRIDGE FROM CO OR PBX LINE CURRENT OPENS GREATER THAN	500 MILLISECONDS WHEN ASSOCIATED WITH NO. 1 ESS HAVING RESWITCH CAPABILITY	2 TO 3 USING 601A (5 UF) CAPACITOR OR EQUIVALENT
ZD		100 MILLISECONDS WHEN ASSOCIATED WITH 800A PBX AND/OR NO. 5 X-BAR CENTREX NOT HAVING AUTOMATIC PERMANENT SIGNAL RELEASE	2 TO 3 USING 575C (1 UF) CAPACITOR OR EQUIVALENT
ZJ		50 MILLISECONDS WHEN ASSOCIATED WITH NO. 5 X-BAR CENTREX HAVING AUTOMATIC PERMANENT SIGNAL RELEASE	2 TO 3 USING 575B (0.5 UF) CAPACITOR OR EQUIVALENT

Fig. 8—Nondedicated Lead Connections for 400D (MD) KTU (CO or PBX Line Circuit) in 69B or 69D Apparatus Mounting

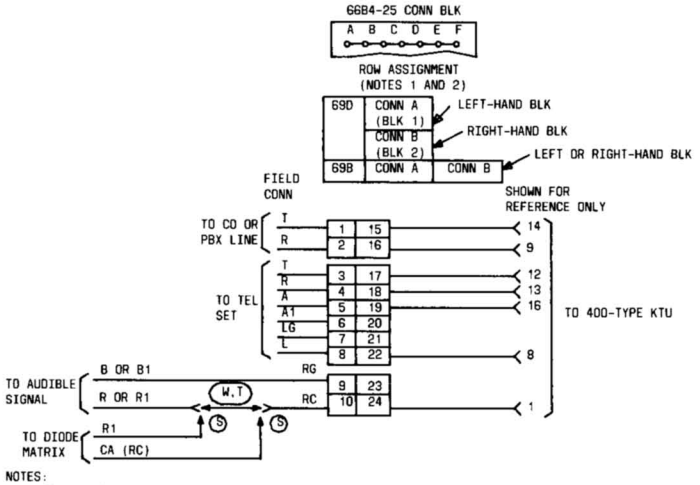

NOTES:
1. COLUMN ASSIGNMENT FOR LEFT-HAND BLK IS COLUMN A-E AND FOR RIGHT-HAND BLK IS COLUMN F-B. SEE BLOCK DIAGRAM COVERING THE 66B4-25 CONN BLK IN FIG. 4 OR 5.
2. TERMINATE DEDICATED LEADS PER FIG. 7.

OPTIONS

OPT	FEATURES		
M	TIMEOUT	LONG TIME DELAY (APPROXIMATELY 20 SECONDS)	
Z		SHORT TIME DELAY (APPROXIMATELY 6±1.5 SECONDS)	
Y	VISUAL	LAMP WINK	
X	HOLD CKT	LAMP STEADY	
W	AUDIBLE SIGNAL	INTERRUPTED RING	
T		STEADY RING	
S		COMMON DIODE MATRIX CONTROL	
V		COMMON WITH RELAY CONTROL	
R	DELAYED HOLD RELEASE	RELEASE OF HOLDING BRIDGE FROM CO OR PBX BY LINE CURRENT OPENS	MINIMUM OF 25 MS
K			600 MS
N	CONNECTS TO 50A CUSTOMER PREMISES SYSTEM		

TOP VIEW OF THE OPTION BLOCK HANDLE TOWARD USER. OPTION SYMBOLS SHOWN CONNECTED TO TERMINALS INDICATE FACTORY PROVIDED OPTIONS.

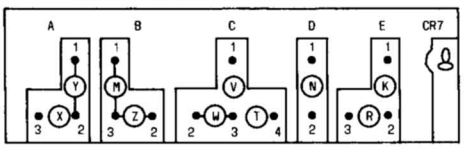

OPTION	CONNECT OPTION PLUG TO TERMINALS	FACTORY PROVIDED
Z	B2-B3	✓
Y	A1-A2	✓
X	A2-A3	
T	C3-C4	
W	C2-C3	✓
V	C1-C3	
R	E2-E3	
N	D1-D2	
K	E1-E2	
M	B1-B2	

Fig. 9—Nondedicated Lead Connections for 400G (MD) KTU (CO or PBX Line Circuit) in 69B or 69D Apparatus Mounting

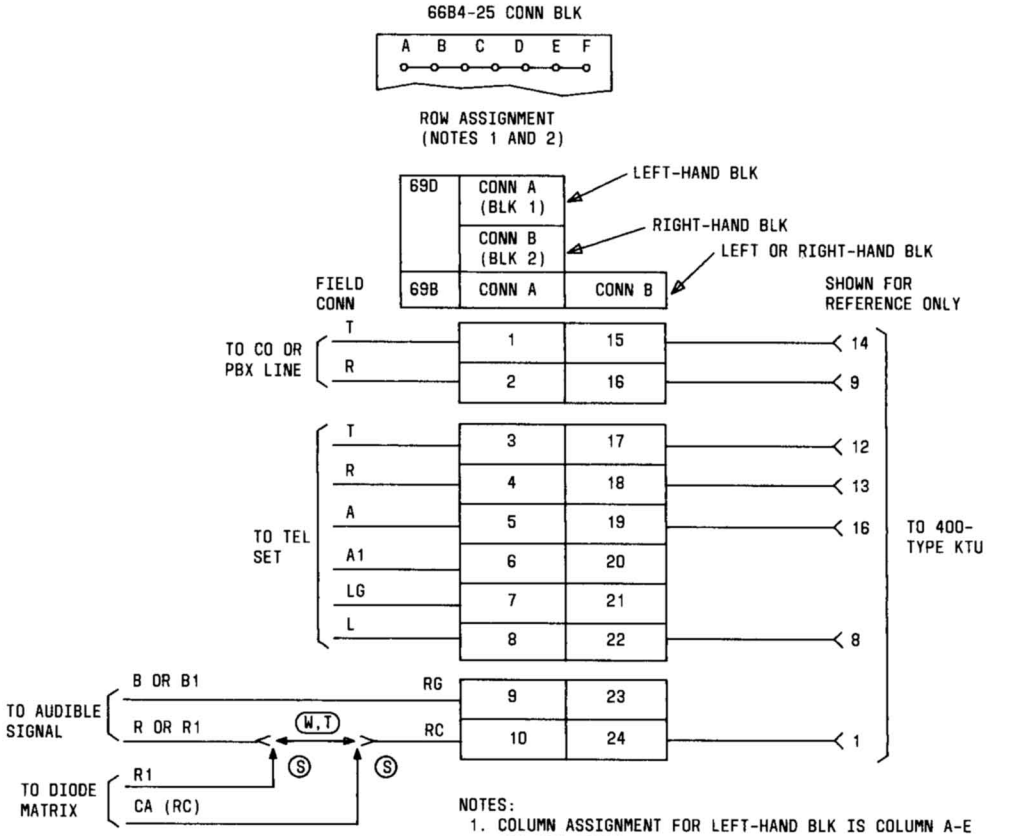

NOTES:
1. COLUMN ASSIGNMENT FOR LEFT-HAND BLK IS COLUMN A-E AND FOR RIGHT-HAND BLK IS COLUMN F-B. SEE BLOCK DIAGRAM COVERING THE 66B4-25 CONN BLK IN FIG. 4 OR 5.
2. TERMINATE DEDICATED LEADS PER FIG. 7.

OPTIONS

OPT	FEATURES	
W*	AUDIBLE SIGNAL	INTERRUPTED RING
V		COMMON AUDIBLE WITH GROUND FOR RELAY CONTROL
S*	HOLD CIRCUIT RELEASE	LONG HOLD ABANDON TIMEOUT (FOR ESS #1, ESS #2, 812 PBX, 770 PBX, DIMENSION PBX
R		SHORT HOLD ABANDON (FOR ALL OTHERS)

* FACTORY INSTALLED

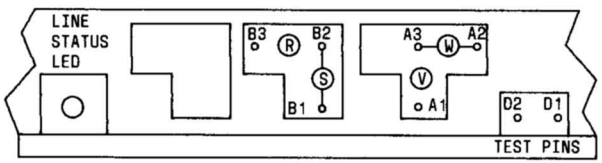

TOP VIEW OF OPTION BLOCK-HANDLE ASSEMBLY. OPTION SYMBOLS SHOWN CONNECTED ARE FACTORY INSTALLED POSITIONS.

Fig. 10—Nondedicated Lead Connections for 400H KTU (CO or PBX Line Circuit) in 69B or 69D Apparatus Mounting

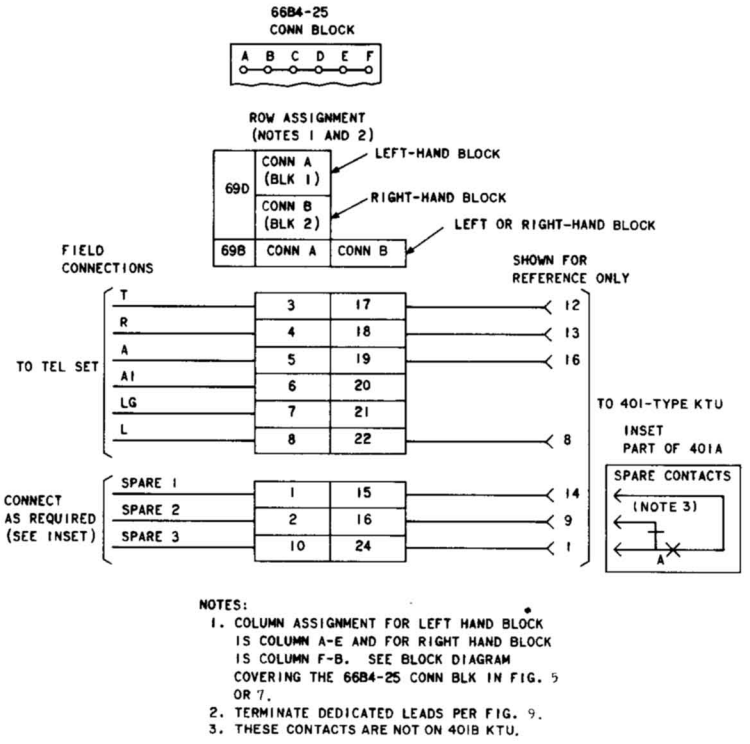

NOTES:
1. COLUMN ASSIGNMENT FOR LEFT HAND BLOCK IS COLUMN A-E AND FOR RIGHT HAND BLOCK IS COLUMN F-B. SEE BLOCK DIAGRAM COVERING THE 66B4-25 CONN BLK IN FIG. 5 OR 7.
2. TERMINATE DEDICATED LEADS PER FIG. 9.
3. THESE CONTACTS ARE NOT ON 401B KTU.

Fig. 11—Nondedicated Lead Connections for 401A KTU (Manual Intercom Line Circuit) in 69B or 69D Apparatus Mounting

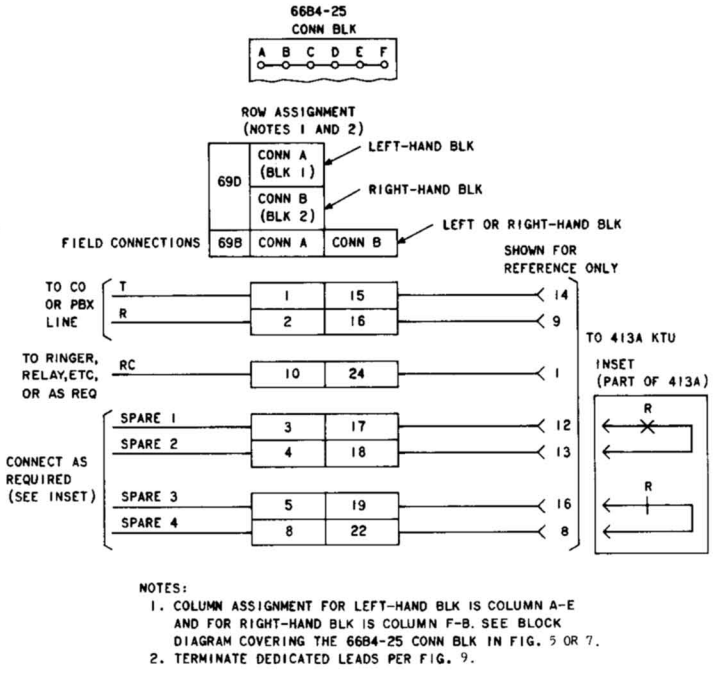

NOTES:
1. COLUMN ASSIGNMENT FOR LEFT-HAND BLK IS COLUMN A-E AND FOR RIGHT-HAND BLK IS COLUMN F-B. SEE BLOCK DIAGRAM COVERING THE 66B4-25 CONN BLK IN FIG. 5 OR 7.
2. TERMINATE DEDICATED LEADS PER FIG. 9.

OPTION STRAPPING ON 413A KTU OPTION BLK

OPTION	FEATURES		STRAP TERMINALS
X	AUDIBLE SIGNALS	STEADY RING	9 TO 10
Z		INTERRUPTED RING	8 TO 10

Fig. 12—Nondedicated Lead Connections for 413A KTU (Auxiliary Ringup Circuit) in 69B or 69D Apparatus Mounting

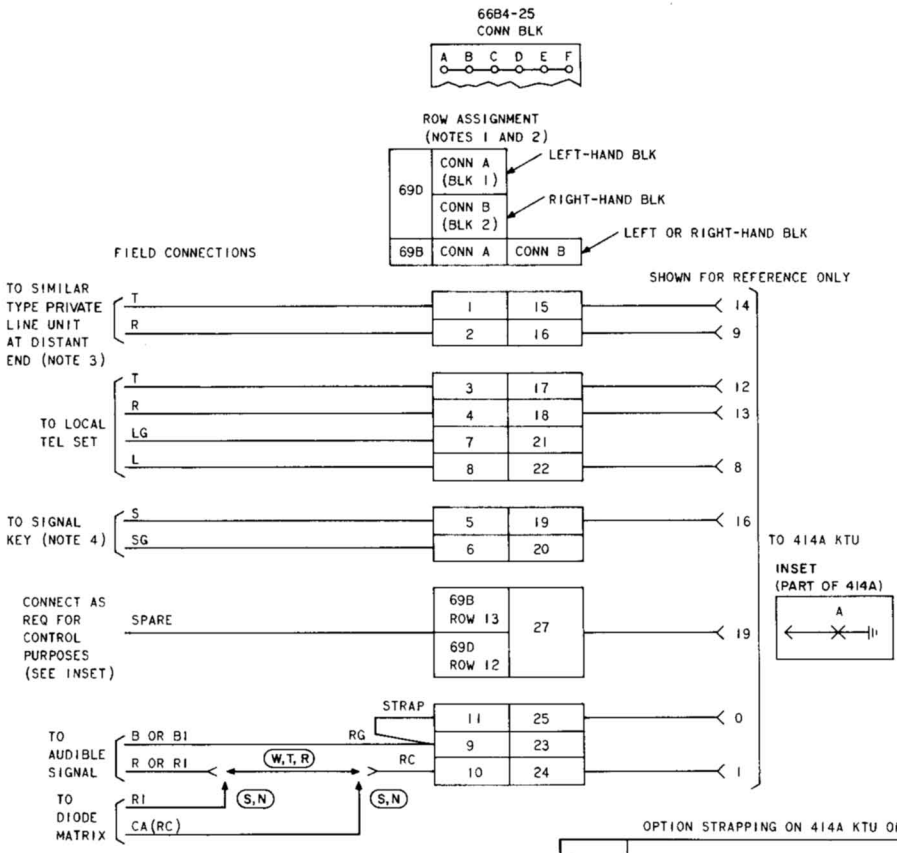

OPTION STRAPPING ON 414A KTU OPTION BLK

OPTION	FEATURES			STRAP TERMINALS
W	AUDIBLE SIGNALS	UNDER CONTROL OF TIME-OUT CIRCUIT (B RELAY)	INTERRUPTED RING	7 TO 8
T			STEADY RING	6 TO 7
S			COMMON WITH DIODE MATRIX CONTROL	7 TO 8
R		UNDER CONTROL OF R RELAY	STEADY RING	4 TO 6
N			COMMON WITH DIODE MATRIX CONTROL	
X	TIME-OUT	10 SECONDS		1 TO 2
Z		16 SECONDS		2 TO 3
WITHOUT X OR Z		23 SECONDS		REMOVE X OR Z STRAPS
M	AUDIBLE RINGBACK TONE (NOTE 5)			9 TO 10

NOTES:
1. COLUMN ASSIGNMENT FOR LEFT-HAND BLK IS COLUMN A-E AND FOR RIGHT-HAND BLK IS COLUMN F-B. SEE BLOCK DIAGRAM COVERING 66B4-25 CONN BLK IN FIG. 5 OR 7.
2. TERMINATE DEDICATED LEADS PER FIG. 9.
3. PVT LINE CKT AT DISTANT END MAY BE A 414A KTU, 419A KTU, 204A KTU, OR ANY OTHER TYPE PVT LINE UNIT REQUIRING RINGING VOLTAGE FOR THE RINGUP CIRCUIT AND FURNISHING RINGING VOLTAGE FROM THE SIGNALING CKT.
4. SIGNAL KEY MAY BE A CONVERTED PICKUP KEY OR ANY EXTERNAL NONLOCKING KEY.
5. FOR SATISFACTORY AUDIBLE RINGBACK TONE, THE RINGING SUPPLY MUST CONTAIN AN AUDIBLE COMPONENT.

Fig. 13—Nondedicated Lead Connections for 414A KTU (Manual Signaling, Ringdown Private Line Circuit) in 69B or 69D Apparatus Mounting

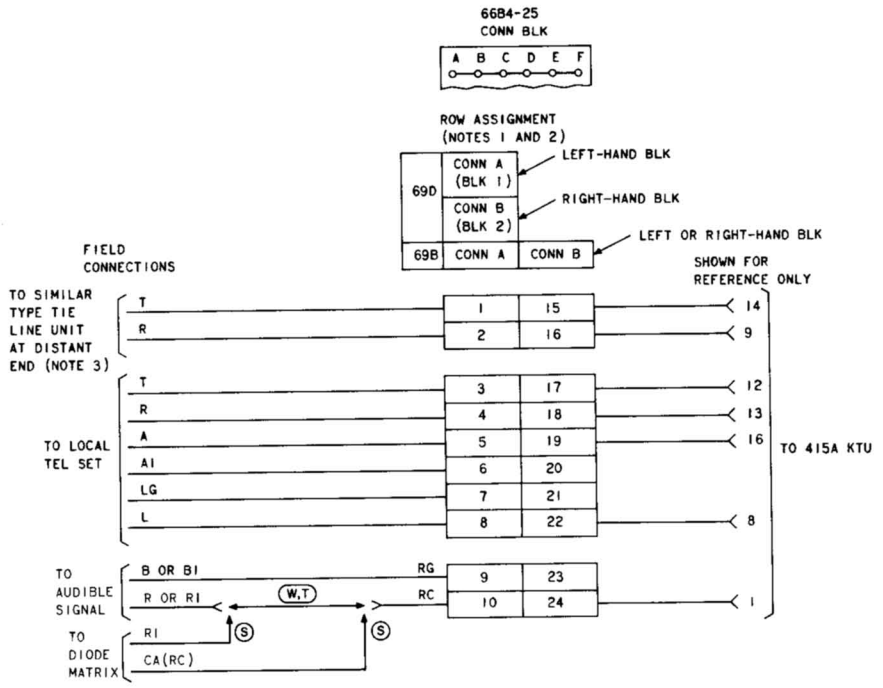

NOTES:
1. COLUMN ASSIGNMENT FOR LEFT-HAND BLK IS COLUMN A-E AND FOR RIGHT-HAND BLK IS COLUMN F-B. SEE BLOCK DIAGRAM COVERING 6634-25 CONN BLK IN FIG. 5 OR 7.
2. TERMINATE DEDICATED LEADS PER FIG. 9.
3. PVT LINE CKT AT DISTANT END MAY BE A 415A KTU,203A KTU, OR ANY OTHER TYPE PVT LINE UNIT REQUIRING DC VOLTAGE FOR THE RINGUP CIRCUIT AND FURNISHING DC VOLTAGE FROM THE SIGNALING CIRCUIT.

OPTION STRAPPING ON 415A KTU OPTION BLK *

OPTION	FEATURES		STRAP TERMINALS
W	AUDIBLE SIGNALS	INTERRUPTED RING	4 TO 6
T		STEADY RING	5 TO 6
S		COMMON WITH DIODE MATRIX CONTROL	4 TO 6
M	AUDIBLE RINGBACK TONE		1 TO 2
Y	VISUAL HOLD SIGNAL		7 TO 8

* - FOR IDLE LINE TERMINATION CONNECT A KS-13490,L1 910 OHM RESISTOR IN SERIES WITH A 542F, 2 UF CAPACITOR ACROSS TERMINALS 9 AND 10. ORDER COMPONENTS LOCALLY AND INSTALL.

Fig. 14—Nondedicated Lead Connections for 415A KTU (Automatic, DC Signaling Private Line Circuit) in 69B or 69D Apparatus Mounting

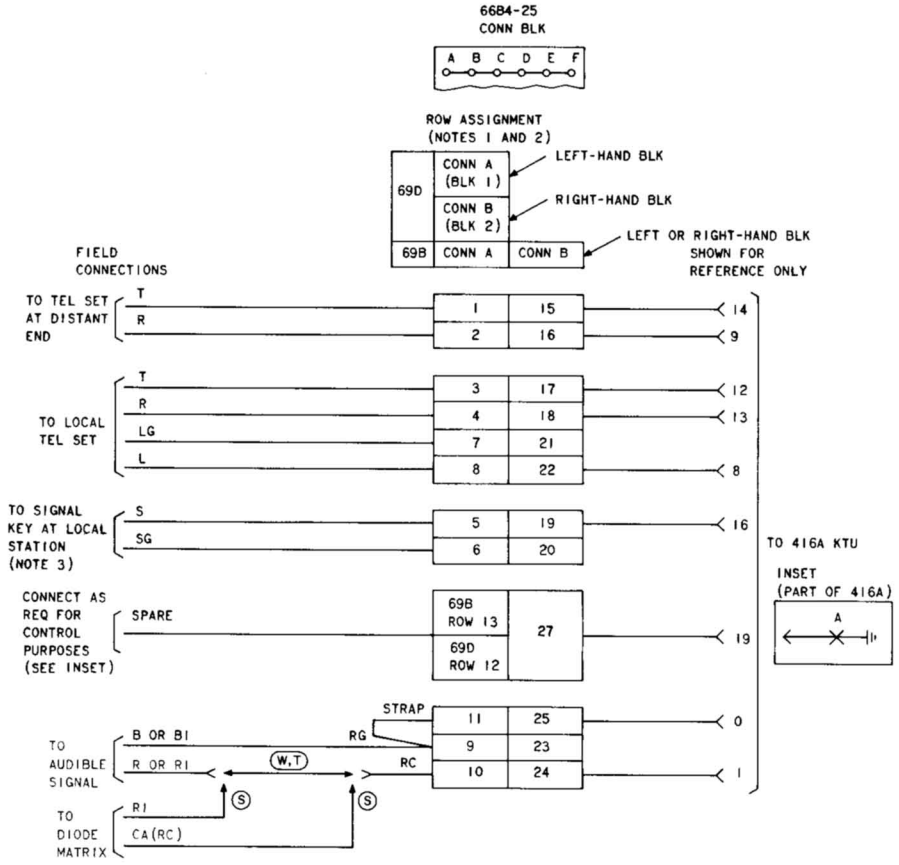

NOTES:
1. COLUMN ASSIGNMENT FOR LEFT-HAND BLK IS COLUMN A-E AND FOR RIGHT-HAND BLK IS COLUMN F-B. SEE BLOCK DIAGRAM COVERING 6684-25 CONN BLK IN FIG. 5 OR 7.
2. TERMINATE DEDICATED LEADS PER FIG. 9.
3. SIGNAL KEY MAY BE A CONVERTED PICKUP KEY OR AN EXTERNAL NONLOCKING KEY.

OPTION STRAPPING ON 416A KTU OPTION BLK

OPTION	FEATURES		STRAP TERMINALS
W	AUDIBLE SIGNALS	INTERRUPTED RING	5 TO 8
T		STEADY RING	7 TO 8
S		COMMON WITH DIODE MATRIX CONTROL	5 TO 8
M	AUDIBLE RINGBACK TONE		9 TO 10

Fig. 15—Nondedicated Lead Connections for 416A KTU (Station Line Circuit) in 69B or 69D Apparatus Mounting

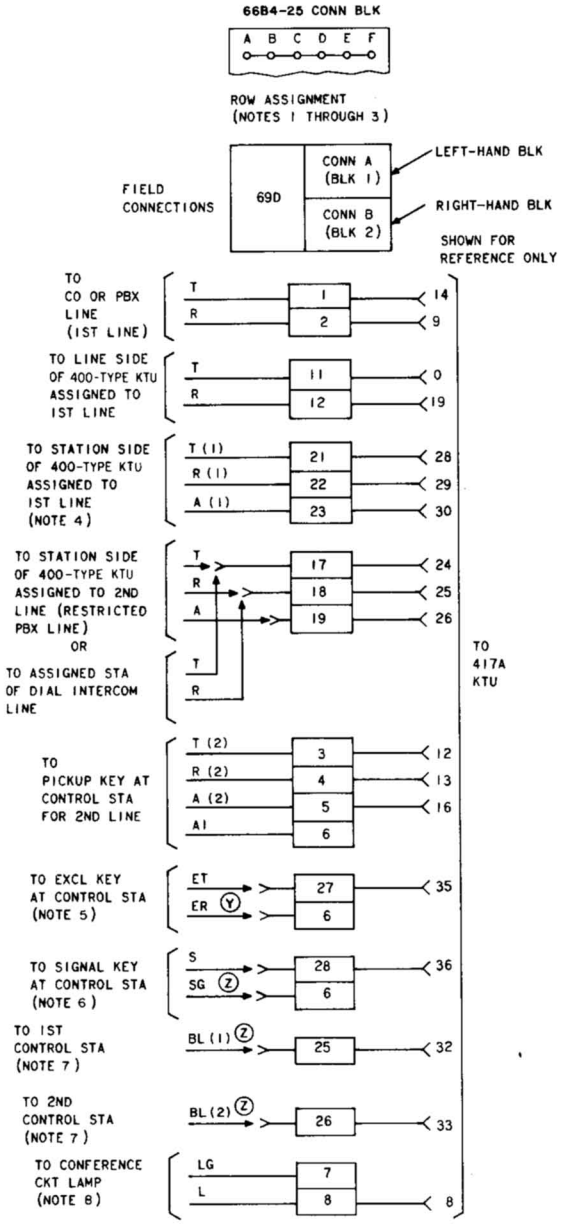

NOTES:

1. COLUMN ASSIGNMENT FOR LEFT-HAND BLK IS COLUMN A-E AND FOR RIGHT-HAND BLK IS COLUMN F-B. SEE BLOCK DIAGRAM COVERING 66B4-25 CONN BLK IN FIG. 7.
2. TERMINATE DEDICATED LEADS PER FIG. 9.
3. ASSOCIATED LAMP AND RINGING CKTS FROM 400-TYPE KTU AND DIAL INTERCOM LINE CONNECT DIRECTLY TO TELEPHONE SETS.
4. STATION LEADS FROM THE TEL SET FOR THE 1ST LINE MUST ALSO BE TERMINATED TO THE STA SIDE OF THE ASSIGNED 400-TYPE KTU.
5. REMOVE AND INSULATE EXCLUSION KEY LEADS FROM IT AND IR IN THE TEL SET IF SO CONNECTED.
6. SIGNAL KEY MAY BE A CONVERTED PICKUP KEY OR AN EXTERNAL NONLOCKING KEY.
7. A DIODE MUST BE INSTALLED IN THE "A" LEAD OF THE TEL SET WHEN Z OPTION IS PROVIDED. FOR METHOD OF CONNECTION USE STATION BUSY LAMP OPTION AS SHOWN IN CONNECTION SECTION OF TYPE SET USED.
8. LAMP INDICATING CONFERENCE CKT IS ACTIVATED.

OPTION STRAPPING ON 417A KTU OPTION BLK

OPTION	FEATURES		STRAP TERMINALS
X	ONE STATION	CONTROLLED BY NONLOCKING KEY	6 TO 10
W *	TWO STATIONS		4 TO 6, 8 TO 10
Y	CONTROLLED BY EXCLUSION KEY		3 TO 5
Z	CONTROLLED BY NONLOCKING KEY		1 TO 2

* - INSTALL KS-15724,L1 DIODES OR EQUIVALENT (PROCURE LOCALLY) BETWEEN TERMINALS AS SHOWN.

Fig. 16—Nondedicated Lead Connections for 417A KTU (Add-on Conference Circuit) in 69D Apparatus Mounting

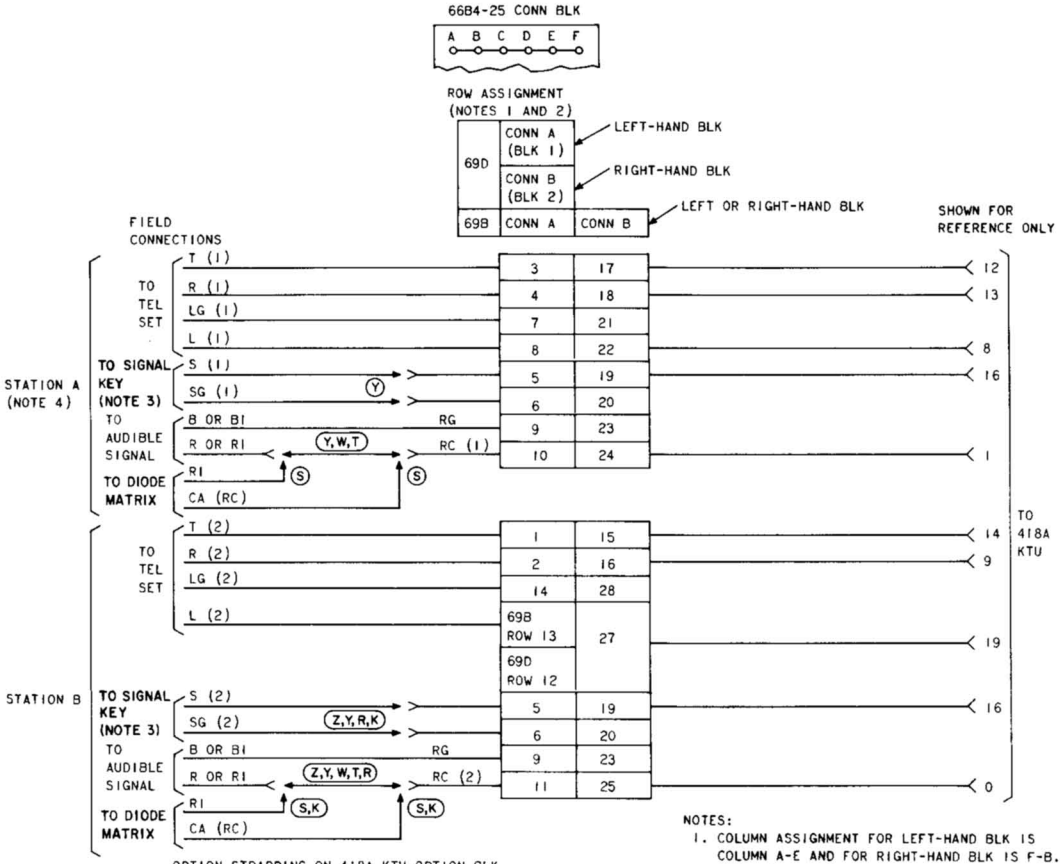

OPTION STRAPPING ON 418A KTU OPTION BLK

OPTION	FEATURES			STRAP TERMINALS
W	AUDIBLE SIGNALS	TWO-WAY AUTOMATIC	INTERRUPED RING	2 TO 3 TO 4 *
T			STEADY RING	1 TO 2 TO 4 *
S			COMMON WITH DIODE MATRIX CONTROL	2 TO 3 TO 4 *
R		ONE-WAY AUTOMATIC, ONE-WAY MANUAL (NOTE 5)	INTERRUPTED RING	3 TO 4
Z			STEADY RING	1 TO 4
K			COMMON WITH DIODE MATRIX CONTROL	3 TO 4
Y		TWO-WAY MANUAL (NOTE 6)		
Q	AUDIBLE RING-BACK	TWO-WAY AUTOMATIC		9 TO 10, 5 TO 7 TO 8 *
H		ONE-WAY AUTOMATIC, ONE-WAY MANUAL		5 TO 7, 9 TO 10
M		TWO-WAY MANUAL		9 TO 10

*-USE CONTINUOUS METHOD OF STRAPPING

NOTES:
1. COLUMN ASSIGNMENT FOR LEFT-HAND BLK IS COLUMN A-E AND FOR RIGHT-HAND BLK IS F-B. SEE BLOCK DIAGRAM COVERING 66B4-25 CONN BLK IN FIG. 5 OR 7.
2. TERMINATE DEDICATED LEADS PER FIG. 9.
3. SIGNAL KEY MAY BE A CONVERTED PICKUP KEY OR AN EXTERNAL NONLOCKING KEY.
4. STATION "A" IS ALWAYS ASSIGNED AS THE AUTOMATIC SIGNALING STATION WHENEVER THE ONE-WAY AUTOMATIC, ONE-WAY MANUAL SIGNALING OPTION IS USED.
5. THESE OPTIONS APPLY TO THE SIGNAL KEY AND AUDIBLE SIGNAL AT STA "B" ONLY. THE AUDIBLE SIGNAL AT STA "A" IS UNDER CONTROL OF THE SIGNAL KEY OF STA "B". THE AUDIBLE SIGNAL AT STA "A" MAY BE PART OF A COMM AUDIBLE ARRANGEMENT PROVIDED THE DIODE MATRIX IS USED FOR CONTROL.
6. THE AUDIBLE SIGNALS AT STAS "A" AND "B" MAY BE PART OF A COMM AUDIBLE ARRANGEMENT PROVIDED THE DIODE MATRIX IS USED FOR CONTROL.

Fig. 17—Nondedicated Lead Connections for 418A KTU (Short Range, DC Signaling Private Line Circuit) in 69B or 69D Apparatus Mounting

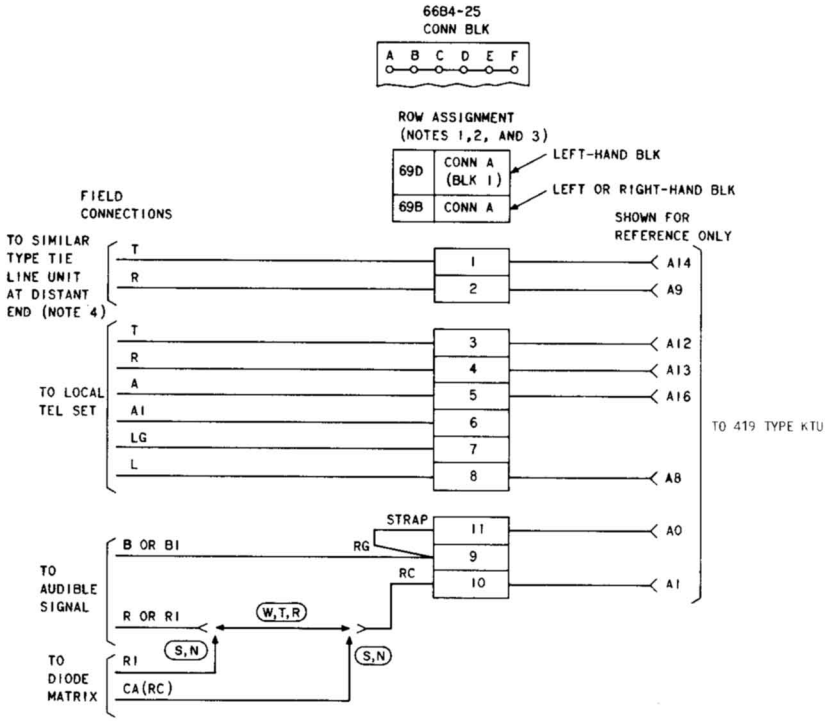

OPTION STRAPPINT ON 419 TYPE KTU OPTION BLK

OPTION	FEATURES			STRAP TERMINALS
W	AUDIBLE SIGNALS	UNDER CONTROL OF TIME-OUT CIRCUIT (B RELAY)	INTERRUPTED RING	6 TO 8
T			STEADY RING	5 TO 6
S			COMMON WITH DIODE MATRIX CONTROL	6 TO 8
R		UNDER CONTROL OF R RELAY	STEADY RING	3 TO 5
N			COMMON WITH DIODE MATRIX CONTROL	
X	TIME-OUT	6 SECONDS		9 TO 10
Z		17 SECONDS		7 TO 10
WITHOUT X OR Z		25 SECONDS		REMOVE X OR Z STRAPS
M	AUDIBLE RINGBACK TONE			1 TO 2

NOTES:
1. COLUMN ASSIGNMENT FOR LEFT-HAND BLK IS COLUMN A-E AND FOR RIGHT-HAND BLK IS COLUMN F-B. SEE BLOCK DIAGRAM COVERING 6684-25 CONN BLK IN FIG. 5 OR 7.
2. TERMINATE DEDICATED LEADS PER FIG. 9.
3. THE 419 TYPE KTU REQUIRES THE USE OF BOTH CONNECTORS IN THE APP MTG BUT CONNECTIONS ARE ONLY MADE THROUGH THE "A" CONNECTOR.
4. PVT LINE CKT AT DISTANT END MAY BE A 419A, 414A, OR 204A KTU OR ANY OTHER TYPE PVT LINE UNIT REQUIRING RINGING VOLTAGE FOR THE RINGUP CIRCUIT AND FURNISHING RINGING VOLTAGE FROM THE SIGNALING CIRCUIT.

Fig. 18—Nondedicated Lead Connections for 419-Type KTU (Automatic Signaling, Ringdown Private Line Circuit) in 69B or 69D Apparatus Mounting

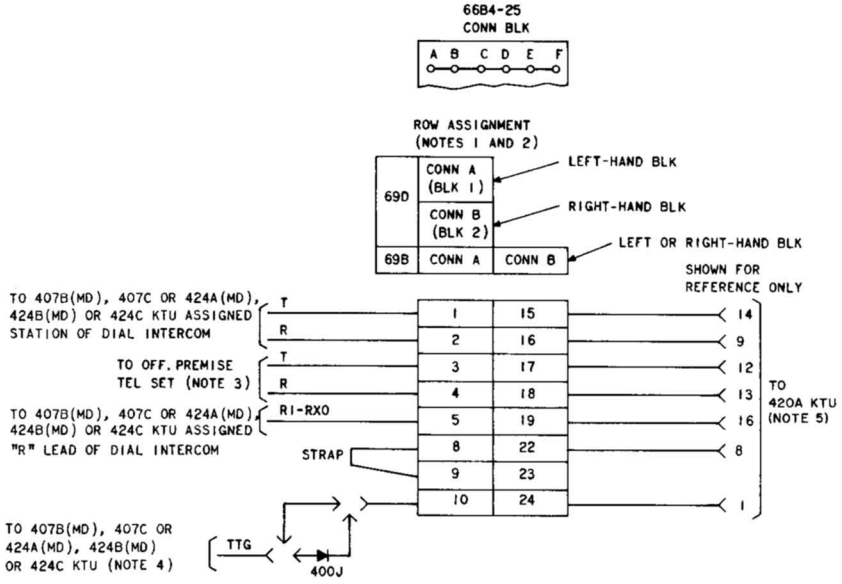

NOTES:

1. COLUMN ASSIGNMENT FOR LEFT-HAND BLK IS COLUMN A-E AND FOR RIGHT-HAND BLOCK IS COLUMN F-B. SEE BLOCK DIAGRAM COVERING 6684-25 CONN BLK IN FIG. 5 OR 7.
2. TERMINATE DEDICATED LEADS PER FIG. 9.
3. MAXIMUM STATION CONDUCTOR LOOP IS 500 OHMS. OFF-PREMISE TELEPHONE SET MAY BE EQUIPPED WITH A "TOUCH-TONE" DIAL PROVIDED THE INTERCOM CIRCUIT IS SO EQUIPPED.
4. PROVIDE A 400J DIODE FOR EACH 420A KTU INSTALLED WHEN THE INTERCOM IS EQUIPPED WITH THE "TOUCH-TONE" ADAPTER (426A AND 427B, SERIES 4 OR C KTUS).
5. THE CABLE RUN FROM THE APPARATUS MOUNTING TO THE CONNECTING BLOCK SHOULD BE AS SHORT AS POSSIBLE, PREFERABLY LESS THAN 10 FT.

OPTION STRAPPING ON 420A KTU OPTION BLK

OPTION	FEATURE		STRAP TERMINALS
J, X	AUDIBLE SIGNALS	AC BUZZER, 18V± OR 10V±	1 TO 4, 7 TO 8
K, X		DC BUZZER, 24V DC	
M, X, R		RINGER, 105V ± STEADY	2 TO 4, 7 TO 8
X		INTERRUPTED	
R		INTERRUPTED WITH STATION BUSY	

Fig. 19—Nondedicated Lead Connections for 420A KTU (Long Line Circuit) in 69B or 69D Apparatus Mounting

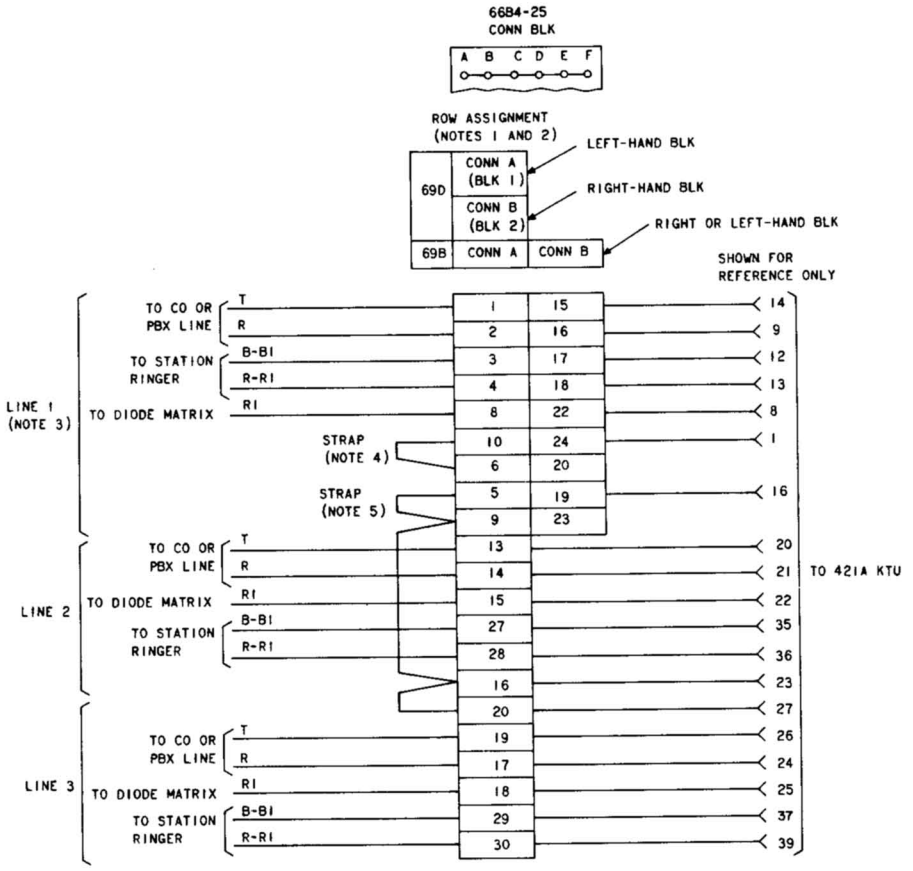

NOTES:

1. COLUMN ASSIGNMENT FOR LEFT-HAND BLK IS COLUMN A-E AND FOR RIGHT-HAND BLK IS COLUMN F-B. SEE BLOCK DIAGRAM COVERING 6684-25 CONN BLK IN FIG. 5 OR 7.
2. TERMINATE DEDICATED LEADS PER FIG. 9.
3. ONLY ONE STATION RINGER CAN BE TRANSFERRED WHEN THE 421A KTU IS USED WITH A 69B APP MTG.
4. STRAP MUST BE ADDED REGARDLESS OF APP MTG. USED.
5. ADD STRAPS ACCORDING TO NUMBER OF LINES SERVED.

OPTION STRAPPING ON 421A KTU OPTION BLK

OPTION	FEATURE	STRAP TERMINALS
W	FOR GENERAL PURPOSE USE	1 TO 2, 5 TO 6, 7 TO 8

Fig. 20—Nondedicated Lead Connections for 421A KTU (Power Failure Transfer Circuit) in 69B or 69D Apparatus Mounting

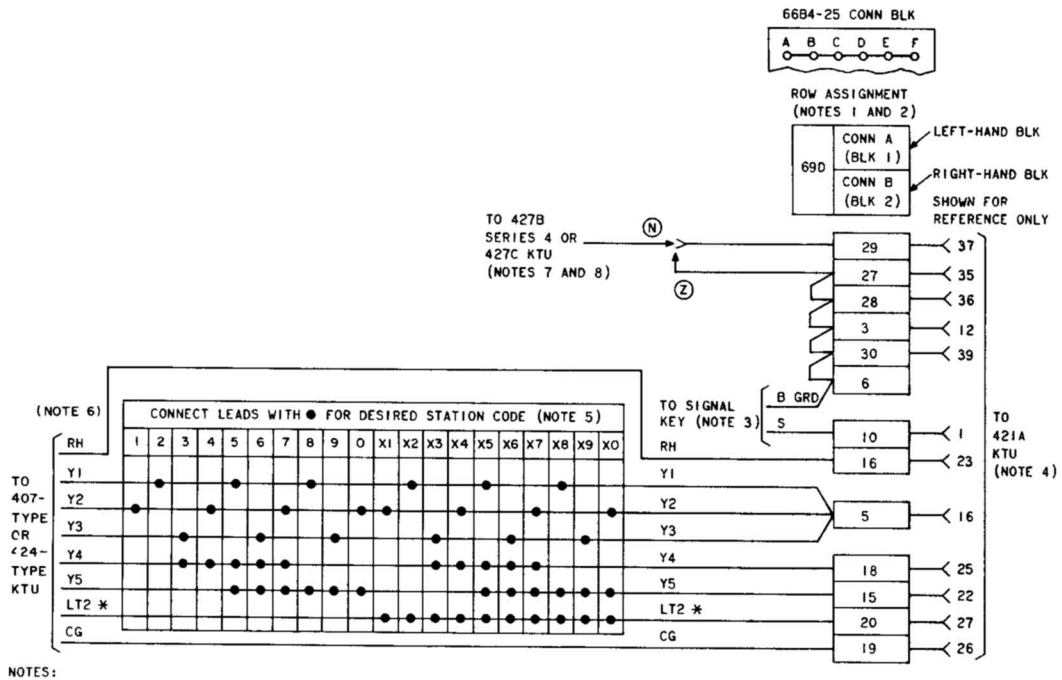

NOTES:

1. COLUMN ASSIGNMENT FOR LEFT-HAND BLK IS COLUMN A-E AND FOR RIGHT-HAND BLK IS COLUMN F-B. SEE BLOCK DIAGRAM COVERING 66B4-25 CONN BLK IN FIG. 7.
2. TERMINATE DEDICATED LEADS PER FIG. 9.
3. PROVIDE SEPARATE SIGNAL KEY FOR EACH STATION CODE TO BE SELECTED.
4. PROVIDE A SEPARATE 421A KTU FOR EACH STATION CODE TO BE SELECTED.
5. SELECT CODE AND CONNECT LEADS FOR SELECTED CODE AS SHOWN IN VERTICAL COLUMN.
6. A 400J DIODE (PROCURE LOCALLY) MUST BE CONNECTED AS SHOWN BELOW WHEN PROVIDING DSS IN A DIAL EQUIPPED SELECTOR ONLY ARRANGEMENT.

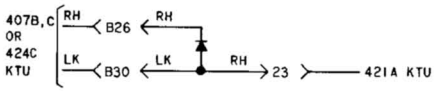

7. IF MORE THAN ONE 421A KTU IS USED FOR DSS, CONNECT AS SHOWN:

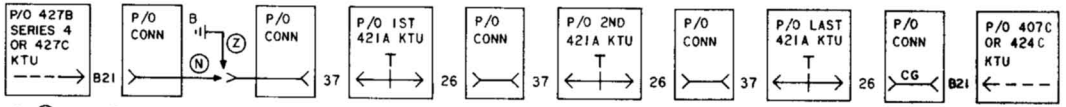

8. (N) WITH "TOUCH-TONE".
   (Z) WITHOUT "TOUCH-TONE".

* USE WITH 424A, 424B, 424C KTU.

Fig. 21—Nondedicated Lead Connections for 421A KTU (Wired for DSS Feature) in 69D Apparatus Mounting

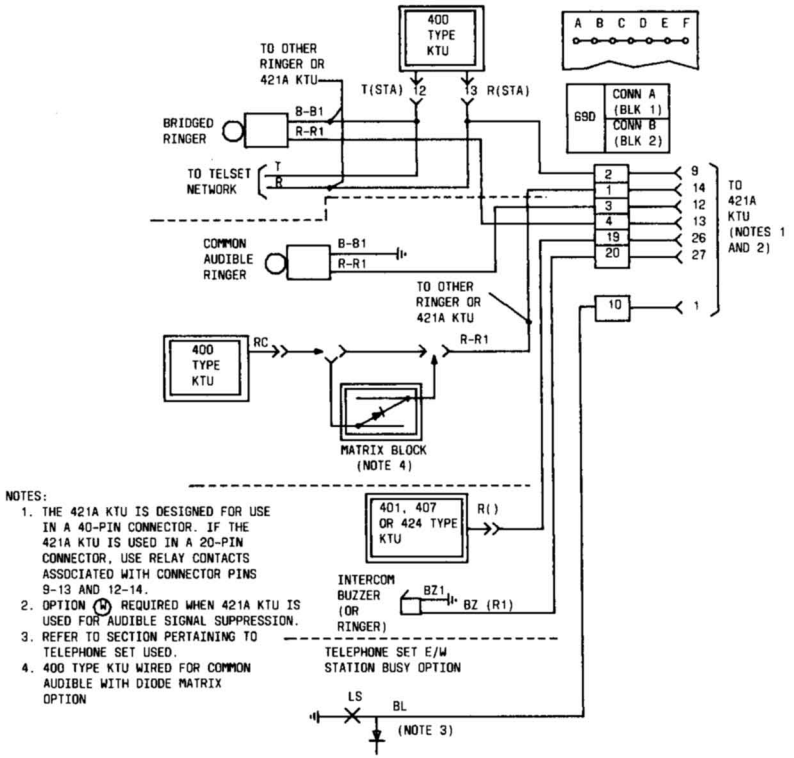

Fig. 22—Nondedicated Lead Connections for 421A KTU (Used as Audible Signal Suppressor) in 69D Apparatus Mounting

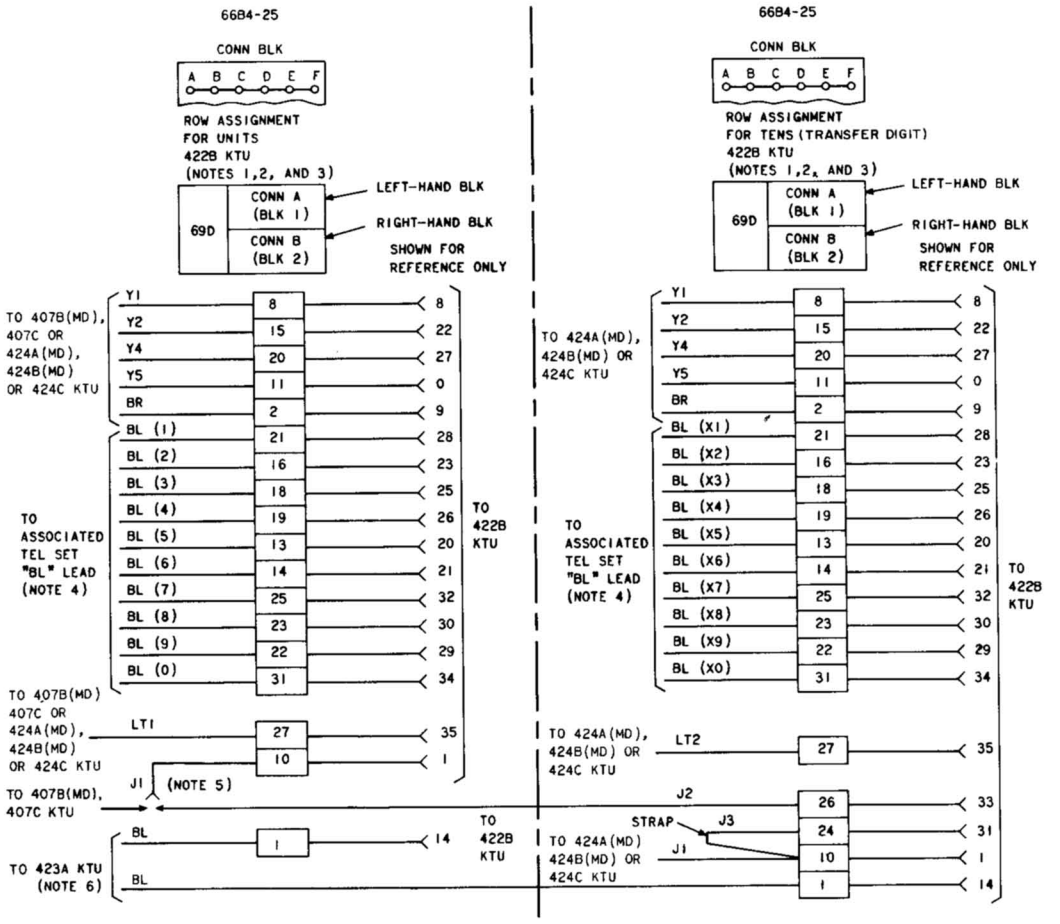

NOTES:

1. COLUMN ASSIGNMENT FOR LEFT-HAND BLK IS COLUMN A-E AND FOR RIGHT-HAND BLK COLUMN IS F-B. SEE BLOCK DIAGRAM COVERING 6684-25 CONN BLK IN FIG. 7.
2. TERMINATE DEDICATED LEADS PER FIG. 9.
3. PROVIDE A SEPARATE 422B KTU FOR THE UNITS GROUP (1-0, SINGLE DIGIT NOS.) AND FOR THE TENS GROUP (X1-X0, TWO DIGIT NOS.)
4. PROVIDE AND INSTALL A DIODE IN THE "A" LEAD OF THE ASSOCIATED TEL SETS AS SHOWN IN TEL SET CONNECTION SECTION. FOR CONNECTION, USE THE STATION BUSY OPTION AS SHOWN IN THE CONNECTION SECTION OF THE TYPE SET USED.
5. CONNECT "J1" LEAD OF UNITS 422B KTU WHEN A 407B KTU IS PROVIDED FOR THE DIAL INTERCOM CIRCUIT. WHEN A 424(MD), 424B(MD), OR 424C KTU IS PROVIDED, STRAP THE "J1" LEAD OF 422B KTU TO "J2" LEAD OF TENS 422B KTU.
6. 423A KTU ASSOCIATED WITH SAME DIAL INTERCOM AS THE 422B KTUS.

OPTION STRAPPING ON 422B KTU OPTION BLK

OPTION	FEATURE	STRAP TERMINALS
R*	STATION BUSY TONE	6 TO 8

*-INSTALL 441J OR EQUIVALENT DIODE (PROCURE LOCALLY) AS SHOWN.

Fig. 23—Nondedicated Lead Connections for 422B KTU (Station Busy Selector Circuit) in 69D Apparatus Mounting

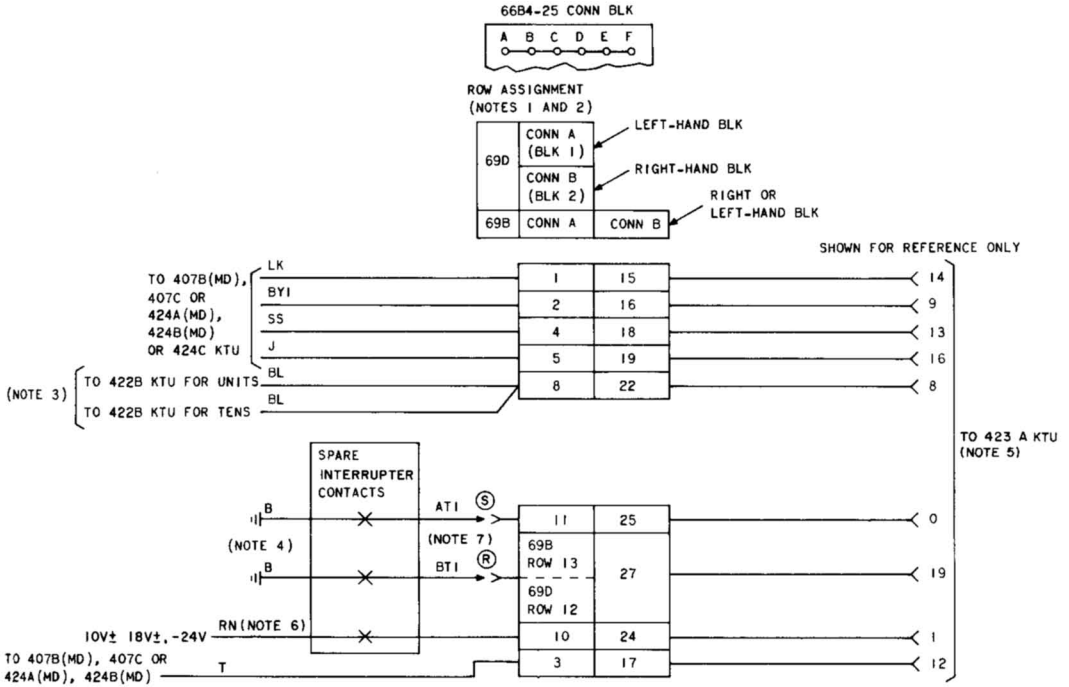

NOTES:

1. COLUMN ASSIGNMENT FOR LEFT-HAND BLK IS COLUMN A-E AND FOR RIGHT-HAND BLK IS COLUMN F-B. SEE BLOCK DIAGRAM COVERING 66B4-25 CONN BLK IN FIG. 5 OR 7.
2. TERMINATE DEDICATED LEADS PER FIG. 9.
3. 422B KTUS ASSOCIATED WITH THE SAME DIAL INTERCOM AS THE 423A KTU.
4. CONNECT TO B GRD AS SHOWN.
5. TO ADJUST DIAL TONE VOLUME ON 423A KTU. TURN KNURLED WHEEL (R1) ON 423A) TO FULL CLOCKWISE POSITION FOR MINIMUM DIAL TONE VOLUME AND TO FULL COUNTERCLOCKWISE POSITION FOR MAXIMUM DIAL TONE VOLUME.

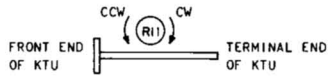

6. IF INTERRUPTED 105V± IS USED FOR DIAL INTERCOM, DO NOT CONNECT THIS LEAD. IF BUZZERS ARE USED FOR DIAL INTERCOM, AUDIBLE SIGNAL IS SUPPLIED ON THIS LEAD VIA SPARE INTERRUPTER CONTACTS TO PIN 1 OF 423A KTU ON 423A KTU OPTION BLK, STRAP TERMINALS 6 TO 7 AND REMOVE (R) OPTION STRAP BETWEEN TERMINALS 4 AND 6.

OPTION STRAPPING ON KTU OPTION BLOCK

OPTION	FEATURES	STRAP TERMINALS ON 423A
T	DIAL TONE	1 TO 2
R	STATION BUSY TONE	4 TO 6
S	AUDIBLE RINGBACK	NO STRAP

Fig. 24—Nondedicated Lead Connections for 423A KTU (Dial, Busy and Audible Ringback Tone Circuit) in 69B or 69D Apparatus Mounting

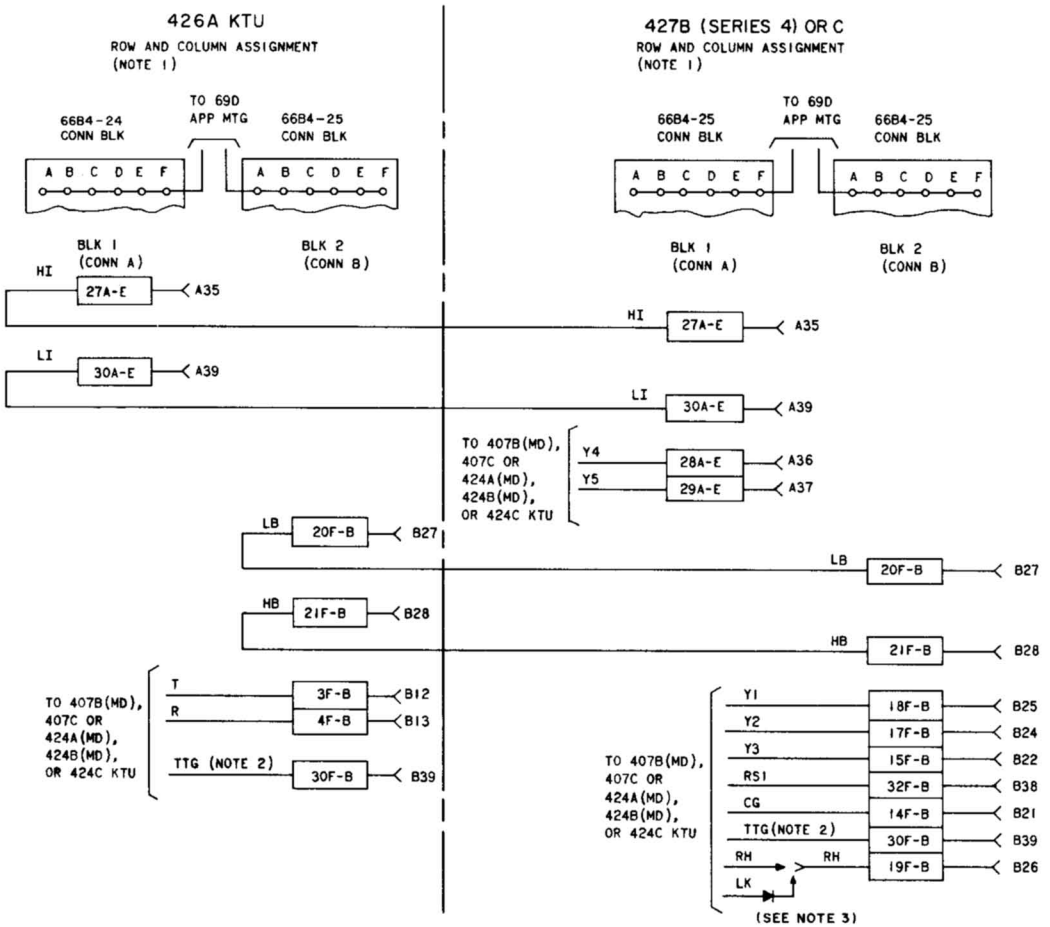

NOTES:

1. TERMINATE DEDICATED LEADS FOR THE 69D APP MTG PER FIG. 9.
2. WHEN ADDING THE 426A AND 427B (SERIES 4) OR C KTUS TO AN EXISTING SYSTEM EQUIPPED WITH A 420A KTU, A DIODE MUST BE INSTALLED IN THE TTG LEAD CONNECTING TO THE 420A KTU, SEE CONNECTING FIGURE COVERING 420A KTU.
3. A 400J DIODE (PROCURE LOCALLY) MUST BE CONNECTED AS SHOWN WHEN PROVIDING DIAL TONE IN A "TOUCH-TONE" EQUIPPED SELECTOR-ONLY ARRANGEMENT.

Fig. 25—Nondedicated Lead Connections for 426A, 427B (MD) (Series 4), or 427C KTUs (TOUCH-TONE Adapter Circuit) in 69D Apparatus Mounting

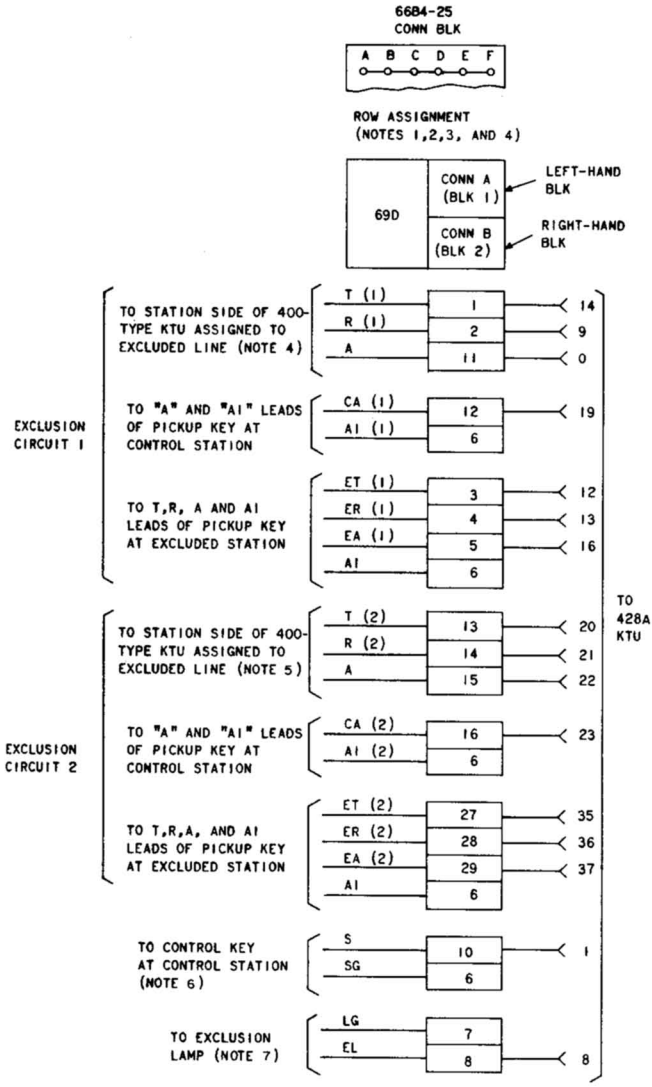

NOTES:

1. COLUMN ASSIGNMENT FOR LEFT-HAND BLK IS COLUMN A-E AND FOR RIGHT-HAND BLK IS COLUMN F-B. SEE BLOCK DIAGRAM COVERING THE 6684-25 CONN BLK IN FIG. 7.
2. TERMINATE DEDICATED LEADS PER FIG. 9.
3. ASSOCIATED LAMP LEADS FROM THE 400-TYPE KTU TERMINATE DIRECTLY TO TEL SETS.
4. FOR AUTOMATIC EXCLUSION, REMOVE B GRD FROM TERM 48A-E ON CONNECTING BLOCK 1.
5. T AND R LEAD FROM STATION SIDE OF 400-TYPE KTU ALSO TERMINATES TO TEL SET OF CONTROL STATION. "A" LEAD FROM STATION SIDE OF 400-TYPE KTU MUST CONNECT THROUGH 428A KTU BEFORE CONNECTING TO TEL SET (CA(1) OR CA(2) LEAD).
6. CONTROL KEY MAY BE A LOCKING OR NONLOCKING TYPE.
7. LAMP INDICATING AN EXCLUSION CIRCUIT IS ACTIVATED.

Fig. 26—Nondedicated Lead Connections for 428A KTU (Multiline Exclusion Circuit) in 69D Apparatus Mounting

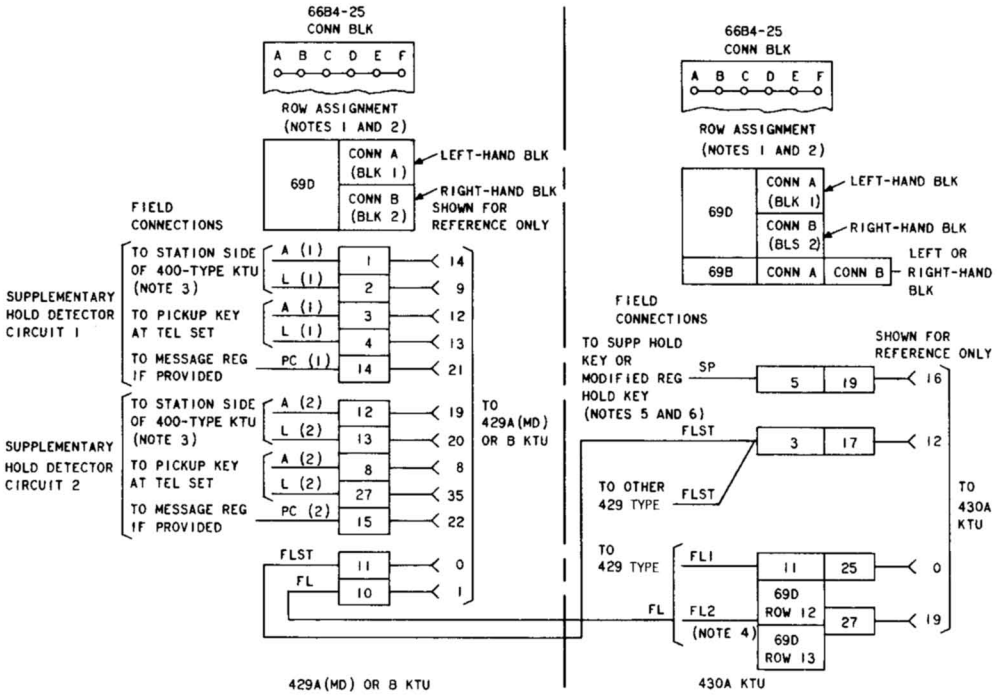

NOTES:

1. COLUMN ASSIGNMENT FOR LEFT-HAND BLK IS COLUMN A-E AND FOR RIGHT-HAND BLK IS COLUMN F-B. SEE BLOCK DIAGRAM COVERING THE 6684-25 CONN BLK IN FIG. 5 OR 7.
2. TERMINATE DEDICATED LEADS PER FIG. 9.
3. T AND R LEADS FROM STATION SIDE OF 400-TYPE KTU TERMINATE DIRECTLY TO THE ASSIGNED PICKUP KEY AT TELEPHONE SET.
4. LIMITATIONS OF 430A KTU ARE AS FOLLOWS:
   (A) FLI OR FL2 CAN SERVE A MAXIMUM OF 50 LAMPS (51A) EACH. DIVIDE LAMPS AS EVENLY AS POSSIBLE BETWEEN THE TWO LEADS.
   (B) SP LEAD CAN CONNECT TO A MAXIMUM OF 20 STATIONS.
5. ANY TELEPHONE SET EQUIPPED WITH A HOLD KEY HAVING A SET OF TRANSFER CONTACTS AND SUFFICIENT CORD LEADS CAN INITIATE I HOLD. REWIRE HOLD KEY ACCORDING TO CONNECTION SECTION OF TYPE SET USED.
6. WHEN USED WITH CONCENTRATOR SETS AND THE 657 KEY MODULE, CONNECT AS FOLLOWS:

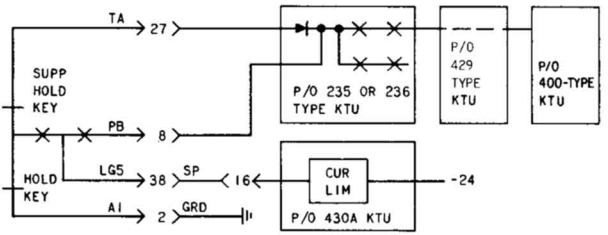

Fig. 27—Nondedicated Lead Connections for 429-Type KTU (Supplementary Hold Detector Circuit) in 69D Apparatus Mounting and 430A KTU (Flutter Generator Circuit) in 69B or 69D Apparatus Mounting

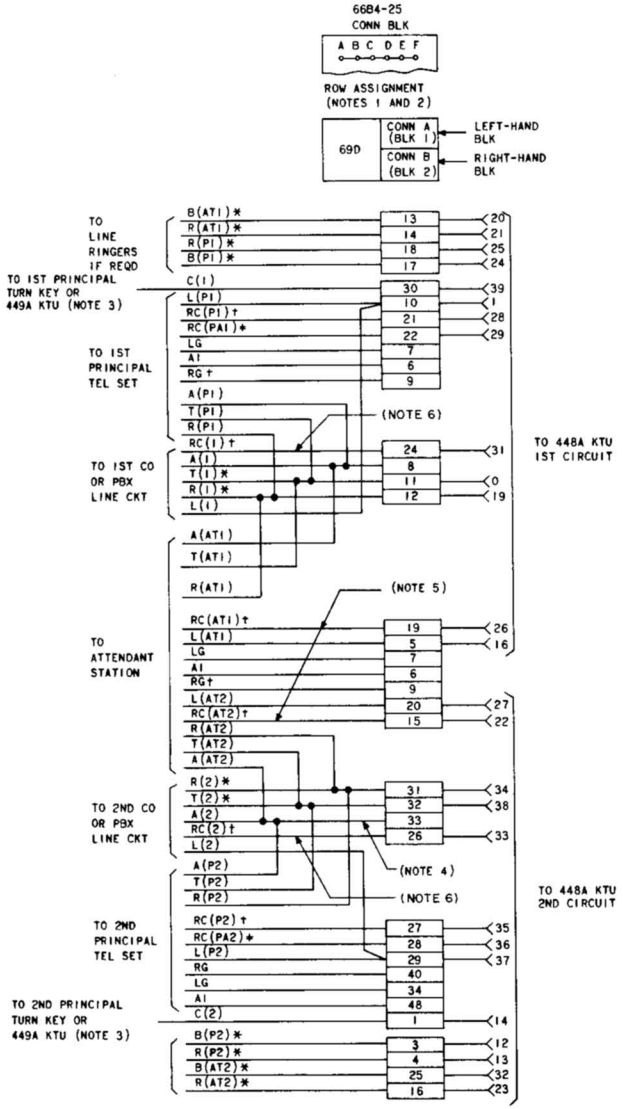

OPTION STRAPPING ON 448A KTU OPTION BLOCK

	OPTION	FEATURE	STRAP TERMINALS	
			1ST CKT	2ND CKT
AUDIBLE SIGNALS	W	INTERRUPTED RING	8 TO 7§	3 TO 5§
	T	STEADY RING	8 TO 6	3 TO 4
	X	STEADY BUZZER	8 TO 10	3 TO 1

§FACTORY PROVIDED

NOTES:
1. COLUMN ASSIGNMENT FOR LEFT-HAND BLK IS COLUMN A-E AND FOR RIGHT-HAND BLK IS COLUMN F-B. SEE BLOCK DIAGRAM COVERING THE 6684-25 CONN BLK IN FIG. 7.
2. TERMINATE DEDICATED LEADS PER FIG. 9.
3. IF IMMEDIATE RINGER TRANSFER IS REQUIRED, CONNECT TO A TURN KEY OR A 449A KTU.
4. MAKE SURE THAT ROW 33 IS NOT CONNECTED TO THE INTERRUPTED OR USED FOR ANY OTHER CONNECTION.
5. MULTIPLE RC LEADS FROM BOTH CIRCUITS TO SAME AUDIBLE SIGNAL AT ATTENDANT STATION.
6. (V) OPTION MUST BE APPLIED ON 400 TYPE KTU LINE CIRCUIT.

* FOR LINE RINGING
† FOR COMMON AUDIBLE RINGING
♦ CONNECT WHEN COMMON AUDIBLE IS USED AND RINGER IS NOT TO BE CUT OFF

Fig. 28—Nondedicated Lead Connections for 448A KTU (Variable Delay Timer Circuit) in 69D Apparatus Mounting

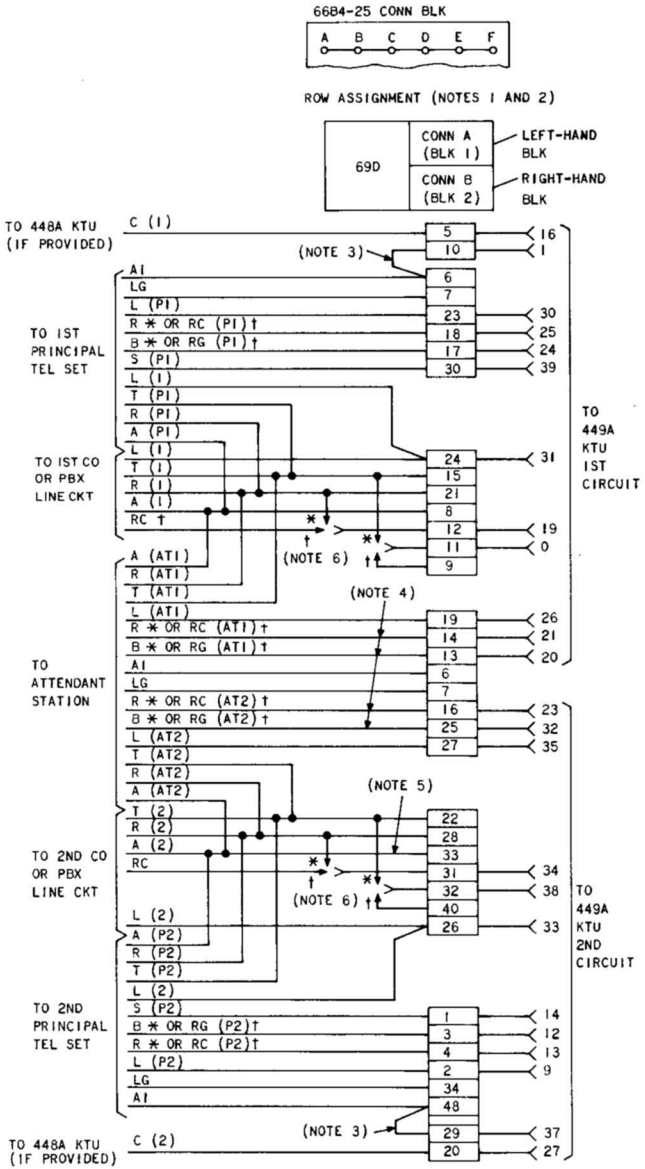

NOTES:

1. COLUMN ASSIGNMENT FOR LEFT-HAND BLK IS COLUMN A-E AND FOR RIGHT-HAND BLK IS COLUMN F-B. SEE BLOCK DIAGRAM COVERING THE 6684-25 CONN BLK IN FIG. 7.
2. TERMINATE DEDICATED LEADS PER FIG. 9.
3. PROVIDE STRAP ONLY IF CIRCUIT IS USED WITH A 448A KTU. IF CIRCUIT IS USED WITH A 448A KTU, NONE OF THE RINGER CONNECTIONS SHOWN FOR THAT CIRCUIT ARE REQUIRED.
4. MULTIPLE THE RINGING LEADS FROM BOTH CIRCUITS TO THE SAME AUDIBLE SIGNAL AT THE ATTENDANT STATION.
5. MAKE SURE THAT ROW 33 IS NOT CONNECTED TO THE INTERRUPTER OR USED FOR ANY OTHER CONNECTION.
6. FOR RINGING OPTIONS, CONNECT AS FOLLOWS:
   FOR LINE RINGING - 1ST CIRCUIT - PROVIDE A STRAP FROM ROW 15 TO ROW 11 AND A STRAP FROM ROW 21 TO ROW 12 AND DO NOT CONNECT THE RC LEAD.
   FOR COMMON AUDIBLE RINGING - 1ST CIRCUIT - PROVIDE A STRAP FROM ROW 9 TO ROW 11 AND CONNECT THE RC LEAD FROM THE LINE CKT TO ROW 12.
   FOR LINE RINGING - 2ND CIRCUIT - PROVIDE A STRAP FROM ROW 22 TO ROW 32 AND A STRAP FROM ROW 28 TO ROW 31 AND DO NOT CONNECT THE RC LEAD.
   FOR COMMON AUDIBLE RINGING - 2ND CIRCUIT - PROVIDE A STRAP FROM ROW 40 TO ROW 32 AND CONNECT THE RC LEAD FROM THE LINE CKT TO ROW 31.

(I) OPTION MUST BE APPLIED ON 400G KTU (OR EARLIER) LINE CIRCUIT.

(M) OPTION MUST BE APPLIED ON 400H KTU SEE BSP 518-215-400

* FOR LINE RINGING

† FOR COMMON AUDIBLE RINGING

Fig. 29—Nondedicated Lead Connections for 449A KTU (Immediate Transfer Control Circuit) in 69D Apparatus Mounting

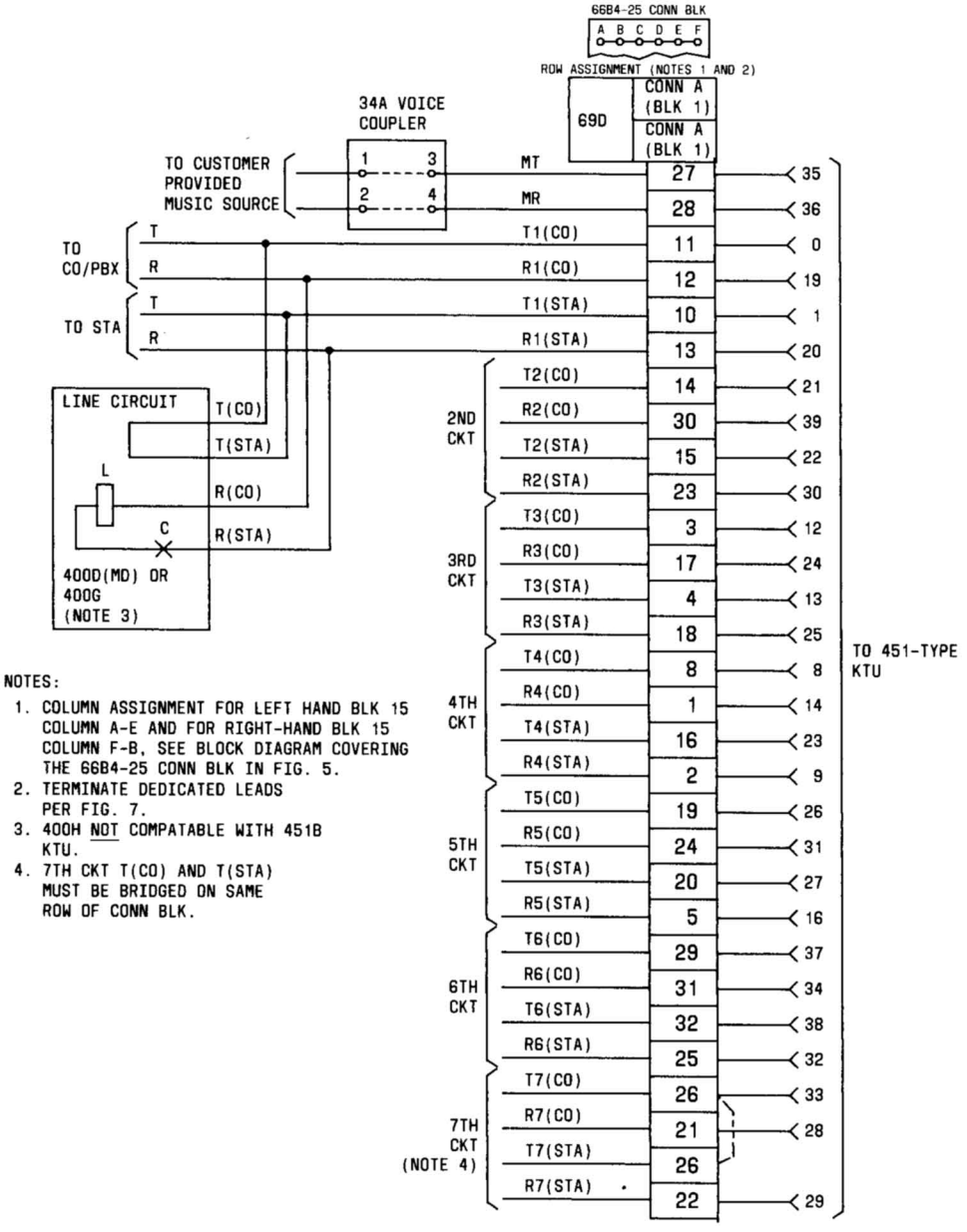

NOTES:

1. COLUMN ASSIGNMENT FOR LEFT HAND BLK 15 COLUMN A-E AND FOR RIGHT-HAND BLK 15 COLUMN F-B, SEE BLOCK DIAGRAM COVERING THE 66B4-25 CONN BLK IN FIG. 5.
2. TERMINATE DEDICATED LEADS PER FIG. 7.
3. 400H NOT COMPATABLE WITH 451B KTU.
4. 7TH CKT T(CO) AND T(STA) MUST BE BRIDGED ON SAME ROW OF CONN BLK.

Fig. 30—Nondedicated Lead Connections for 451B KTU (Music-On-Hold Circuit) in 69D Apparatus Mounting

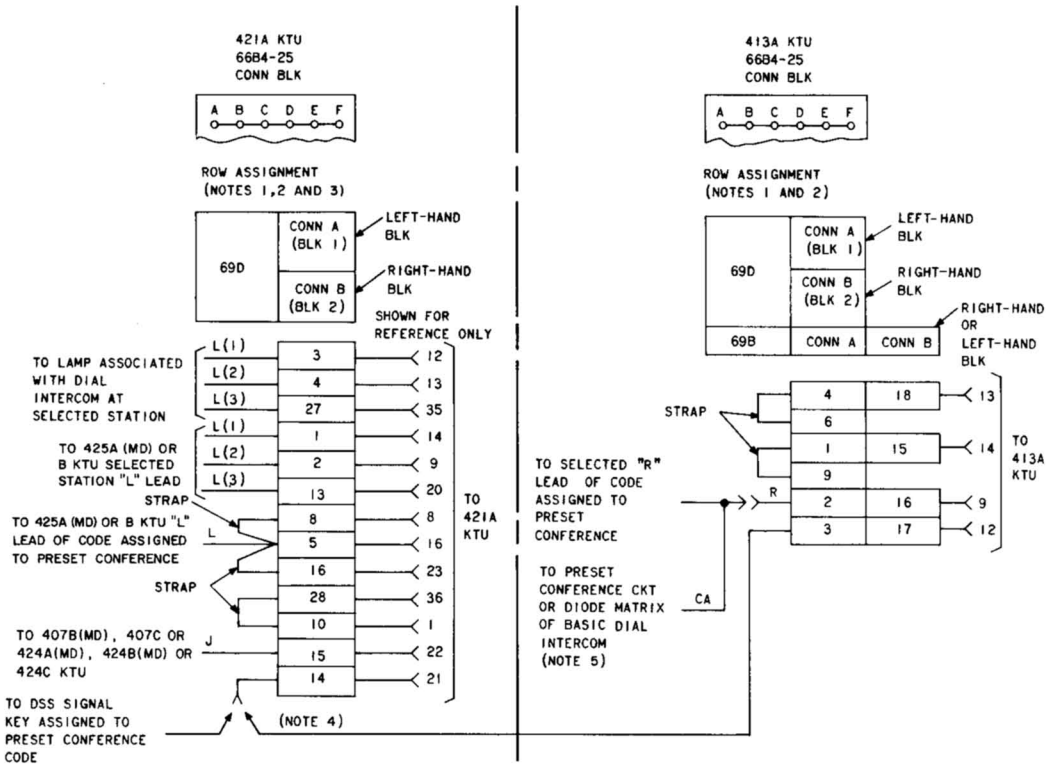

NOTES:

1. COLUMN ASSIGNMENT FOR LEFT-HAND BLK IS COLUMN A-E AND FOR RIGHT-HAND BLK IS F-B. SEE BLOCK DIAGRAM COVERING 6684-25 CONN BLK IN FIG. 5 OR 7.
2. TERMINATE DEDICATED LEADS PER FIG. 9.
3. WHEN THIS CIRCUIT IS PROVIDED, RING VOLTAGE (105V±) MUST BE USED TO OPERATE THE AUDIBLE SIGNALS CONNECTED TO THE DIAL INTERCOM LINE.
4. PROVIDE THE 413A KTU ONLY WHEN ACCESS TO THE PRESET CONFERENCE IS BY DIAL CODE OR BY DIAL CODE AND DSS. DO NOT PROVIDE THE 413A KTU WHEN ACCESS TO THE PRESET CONFERENCE IS LIMITED TO DSS.
5. THE "CA" LEAD MUST CONNECT TO THE DIODE MATRIX WHETHER OR NOT THE 413A KTU IS PROVIDED.

OPTION STRAPPING ON 421A KTU OPTION BLK

OPTION	FEATURE	STRAP TERMINALS
W	PRESET CONFERENCE	1 TO 2, 7 TO 8

Fig. 31—Nondedicated Lead Connections for Preset Conference Circuit of a Deluxe Dial Intercom Line (421A KTU in 69D Apparatus Mounting and a 413A KTU in a 69B or 69D Apparatus Mounting)

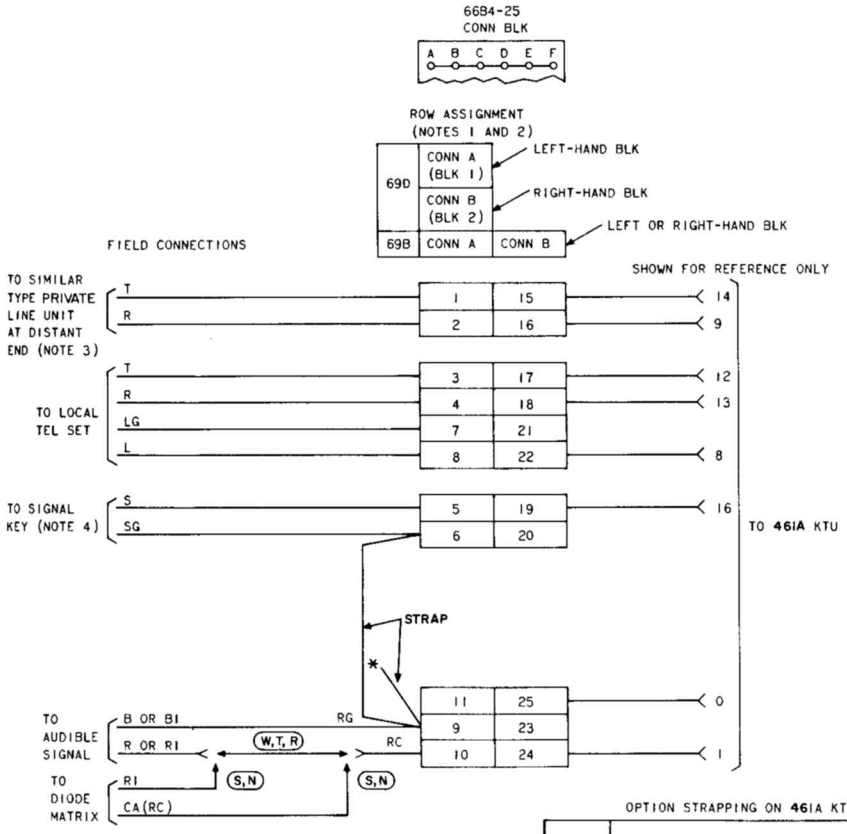

OPTION STRAPPING ON 461A KTU OPTION BLK

OPTION	FEATURES			STRAP TERMINALS
W	AUDIBLE SIGNALS	UNDER CONTROL OF TIME-OUT CIRCUIT (B RELAY)	INTERRUPTED RING	7 TO 8
T			STEADY RING	6 TO 7
S			COMMON WITH DIODE MATRIX CONTROL	7 TO 8
R		UNDER CONTROL OF R RELAY	STEADY RING	4 TO 6
N			COMMON WITH DIODE MATRIX CONTROL	
X	TIME-OUT	10 SECONDS		1 TO 2
Z		15 SECONDS		2 TO 3
WITHOUT X OR Z		23 SECONDS		REMOVE X OR Z STRAPS
M	AUDIBLE RINGBACK TONE (NOTE 5)			9 TO 10

NOTES:
1. COLUMN ASSIGNMENT FOR LEFT-HAND BLK IS COLUMN A-E AND FOR RIGHT-HAND BLK IS COLUMN F-B. SEE BLOCK DIAGRAM COVERING 6684-25 CONN BLK IN FIG. 5 OR 7.
2. TERMINATE DEDICATED LEADS PER FIG. 9.
3. PVT LINE CKT AT DISTANT END MAY BE A 414A KTU, 419A KTU, 204A KTU, OR ANY OTHER TYPE PVT LINE UNIT REQUIRING RINGING VOLTAGE FOR THE RINGUP CIRCUIT AND FURNISHING RINGING VOLTAGE FROM THE SIGNALING CKT.
4. SIGNAL KEY MAY BE A CONVERTED PICKUP KEY OR ANY EXTERNAL NONLOCKING KEY.
5. FOR SATISFACTORY AUDIBLE RINGBACK TONE, THE RINGING SUPPLY MUST CONTAIN AN AUDIBLE COMPONENT.

* STRAP TO B GRD (DEDICATED WIRING) OF APPARATUS MOUNTING

Fig. 32—Nondedicated Lead Connections for 461A KTU (Manual Signaling, Ringdown Private Line Circuit) in 69B or 69D Apparatus Mounting

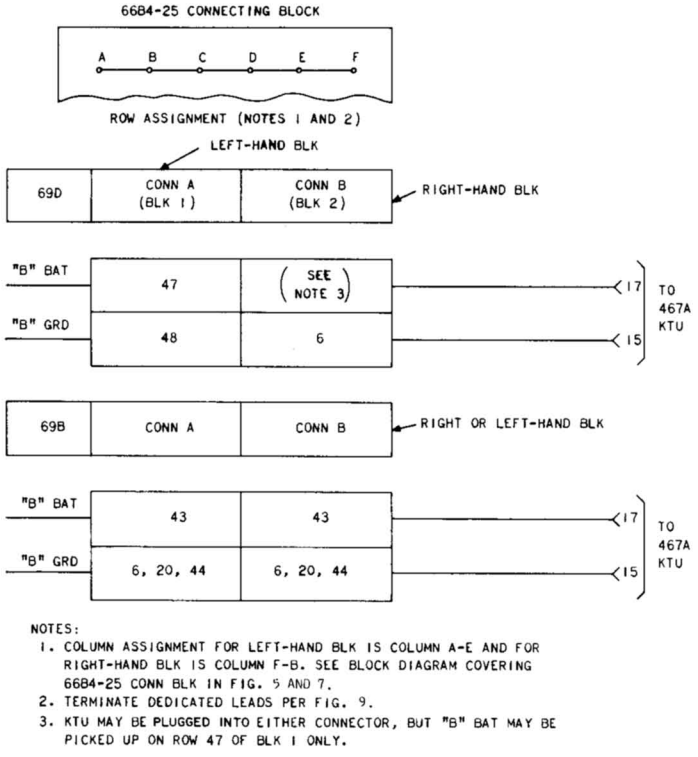

NOTES:
1. COLUMN ASSIGNMENT FOR LEFT-HAND BLK IS COLUMN A-E AND FOR RIGHT-HAND BLK IS COLUMN F-B. SEE BLOCK DIAGRAM COVERING 6684-25 CONN BLK IN FIG. 5 AND 7.
2. TERMINATE DEDICATED LEADS PER FIG. 9.
3. KTU MAY BE PLUGGED INTO EITHER CONNECTOR, BUT "B" BAT MAY BE PICKED UP ON ROW 47 OF BLK 1 ONLY.

Fig. 33—Nondedicated Lead Connections for 467A KTU (Voltage Monitor Circuit) in 69B or 69D Apparatus Mounting

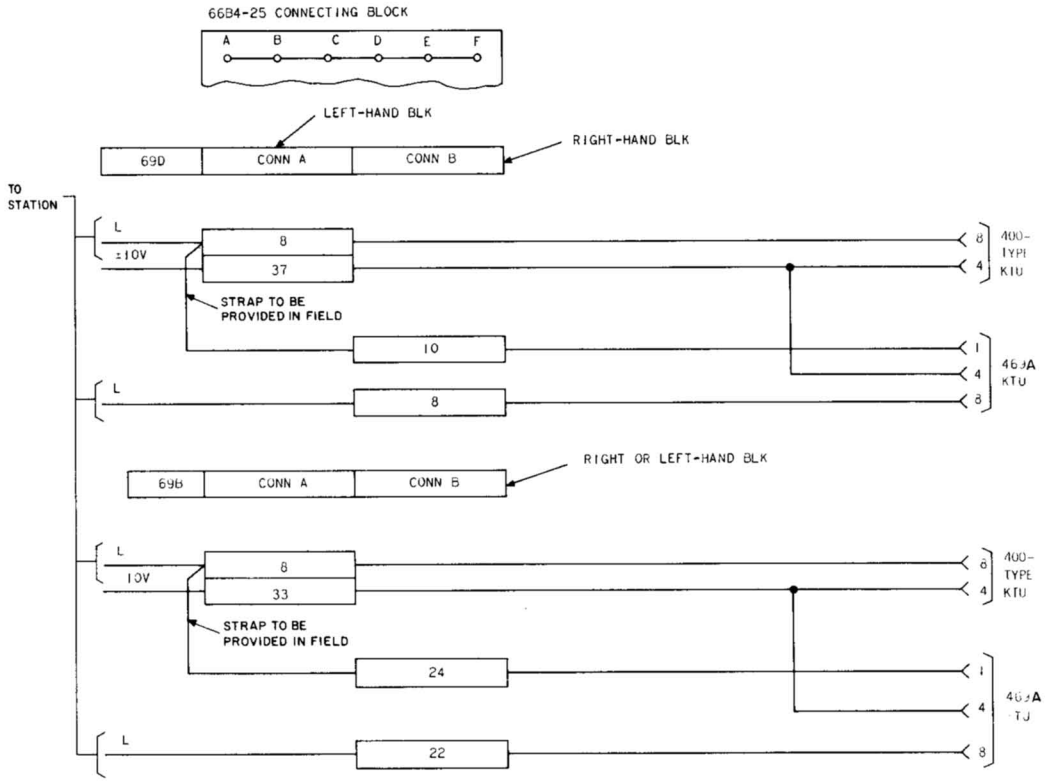

NOTES:
1. COLUMN ASSIGNMENT FOR LEFT-HAND BLK IS COLUMN A-E AND FOR RIGHT-HAND BLK IS COLUMN F-B. SEE BLOCK DIAGRAM COVERING 66B4-25 CONN BLK IN FIG. 5 AND 7.
2. TERMINATE DEDICATED LEAD PER FIG. 9.
3. KTU MAY BE PLUGGED INTO EITHER CONNECTOR BUT ±10V MAY BE PICKED UP ON ROW 37 OF BLK 1 ONLY.

Fig. 34—Nondedicated Lead Connections for 469A KTU (Lamp Extender Circuit) in 69B or 69D Apparatus Mounting

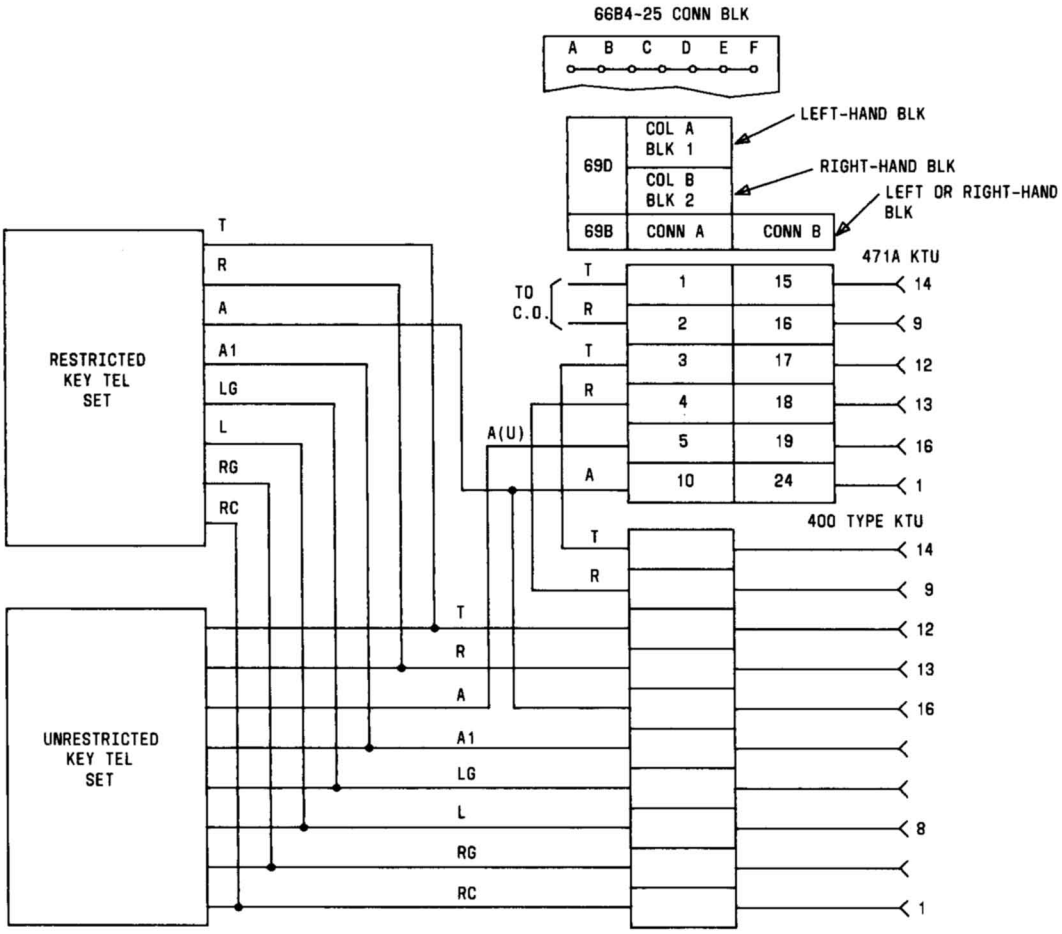

Fig. 35—Nondedicated Lead Connections for 471A (MD) or 471B KTU (Battery Reversal Toll Restriction Circuit) in 69B or 69D Apparatus Mounting

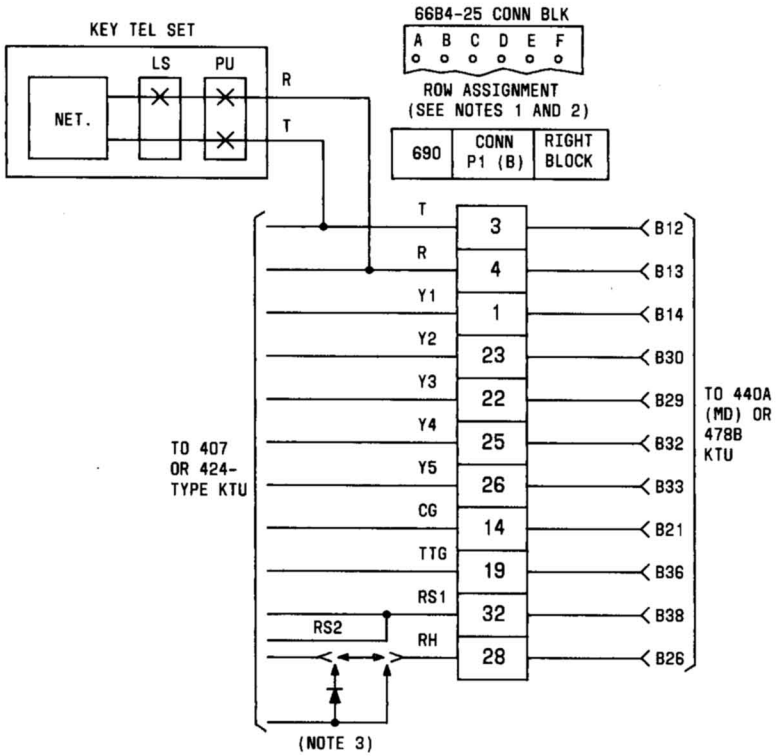

NOTES:
1. SEE BLOCK DIAGRAM COVERING 66B4-25 CONN BLK IN FIG. 5.
2. TERMINATE DEDICATED LEADS PER FIG. 7.
3. DIODE (400J, LOCALLY PROVIDED) MUST BE FURNISHED IN SYSTEM EQUIPPED WITH DIAL TONE.
4. WHEN ADDING THE 440A KTU (MD) TO AN EXISTING SYSTEM EQUIPPED WITH A 420A KTU, A DIODE MUST BE INSTALLED IN THE TTG LEAD CONNECTING TO THE 420A KTU. SEE FIG. 14 COVERING CONNECTIONS OF THE 420A KTU.

Fig. 36—Nondedicated Lead Connections for 440A (MD) or 478B KTU (TOUCH-TONE Adapter Circuit) in 69D Apparatus Mounting

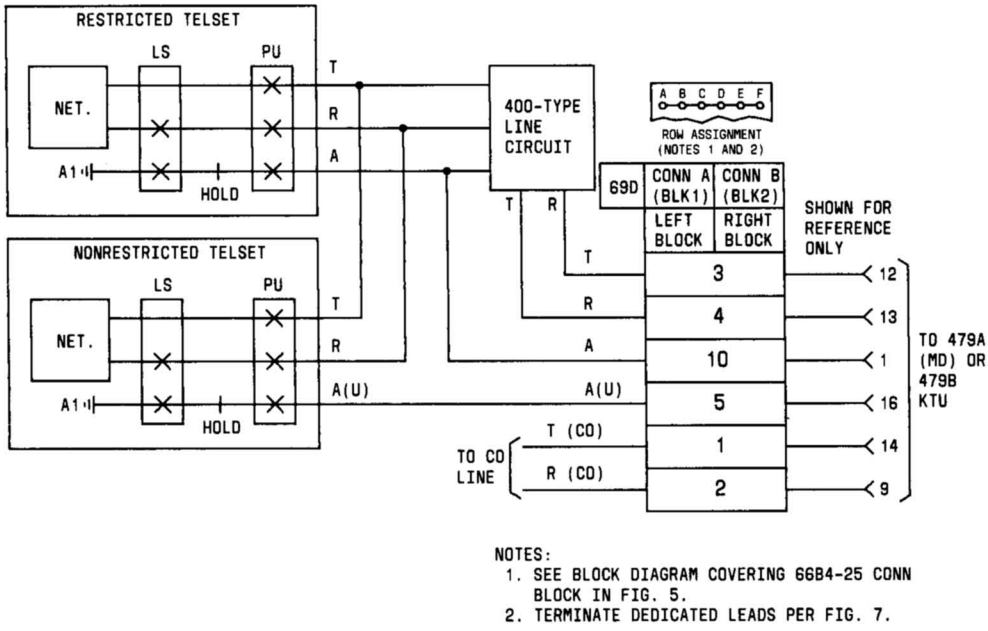

Fig. 37—Nondedicated Lead Connections for 479A (MD) and 479B KTU (Rotary Dial Toll Restriction Circuit) in 69D Apparatus Mounting

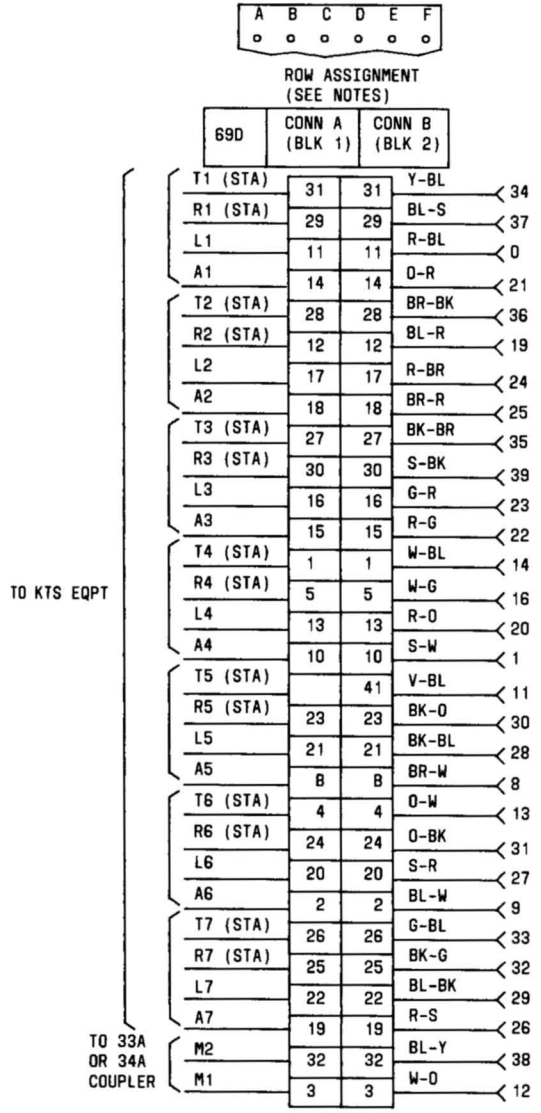

NOTES:

1. COLUMN ASSIGNMENT FOR LEFT HAND BLK IS COLUMN A-E AND FOR RIGHT HAND BLK IS B-F. SEE BLK DIAGRAM COVERING 6684-25 CONN BLK IN FIG. 5
2. TERMINATE DEDICATED LEADS PER FIG. 7
3. IF A 498A EQUIPPED WITH A 116A1 CM IS INSTALLED IN CONNECTOR A, A SECOND KTU REQUIRING THE RN LEAD CANNOT BE USED IN CONNECTOR B, IF A SECOND 498A IS USED IN CONNECTOR B, DO NOT EQUIP IT WITH A 116A1 CM

Fig. 38—Nondedicated Lead Connections for 498A KTU (Music-On-Hold Circuit) Equipped With a 116A1 Circuit Module in 69D Apparatus Mounting

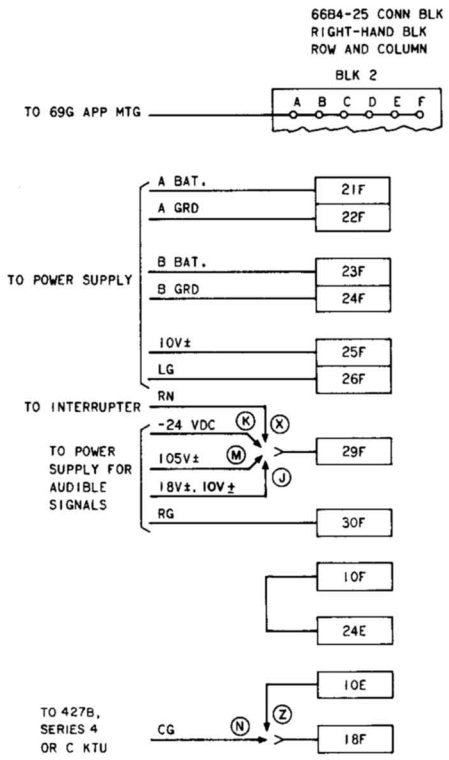

OPTIONS

Z	WITHOUT	"TOUCH-TONE" DIAL STATION
N	WITH	
M	RINGER	TYPE AUDIBLE SIGNALS
K	DC BUZZER OR BELL	
J	AC BUZZER OR BELL	
X	INTERRUPTED	

NOTE:
A COMMON RINGER MAY NOT BE USED WITH THE R2 LEAD IN THE 407B (MD) KTU. A COMMON RINGER MAY BE USED ON R2 OF 407C KTU.

Fig. 39—Basic Dial Intercom, Strapping and Power Supply Connections for 407B (MD) or 407C KTU

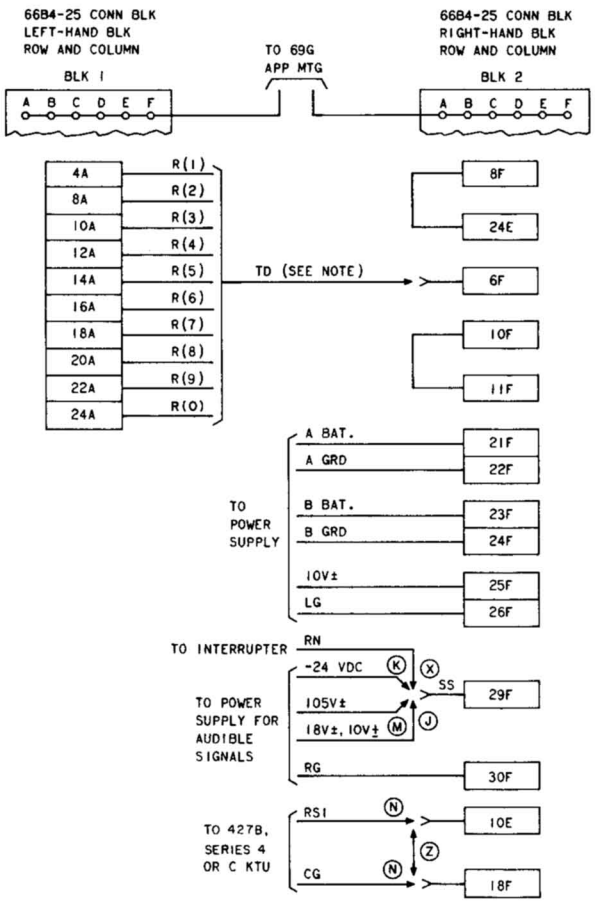

OPTIONS

Z	WITHOUT	"TOUCH-TONE" DIAL STATION
N	WITH	
M	RINGER	TYPE AUDIBLE SIGNALS
K	DC BUZZER OR BELL	
J	AC BUZZER OR BELL	
X	INTERRUPTED	

NOTE:
1. ANY SELECTED R LEAD [R(1)-R(0)] MAY BE ASSIGNED AS THE INITIAL DIGIT OF A 2-DIGIT CODE. THE R LEAD SO ASSIGNED MAY NOT BE USED FOR A STATION CODE.
2. R2 LEAD OF 424A (MD) AND 424B (MD) AND 424B (MD) MAY NOT BE USED WITH COMMON RINGER. THE 424C KTU MAY BE USED WITH A COMMON RINGER.

Fig. 40—Basic Dial Intercom, Strapping and Power Supply Connections for 424A (MD), 424B (MD), or 424C KTU

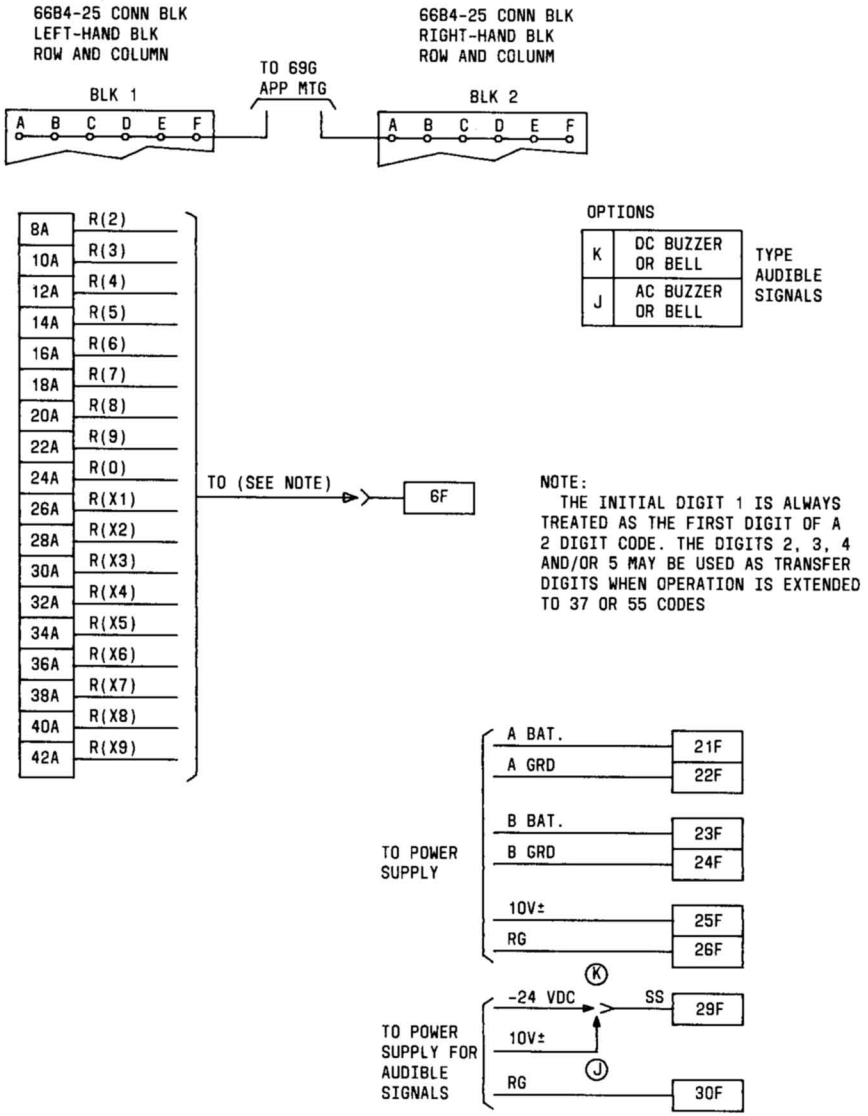

Fig. 41—Basic Dial Intercom, Strapping and Power Supply Connections for 494A KTU

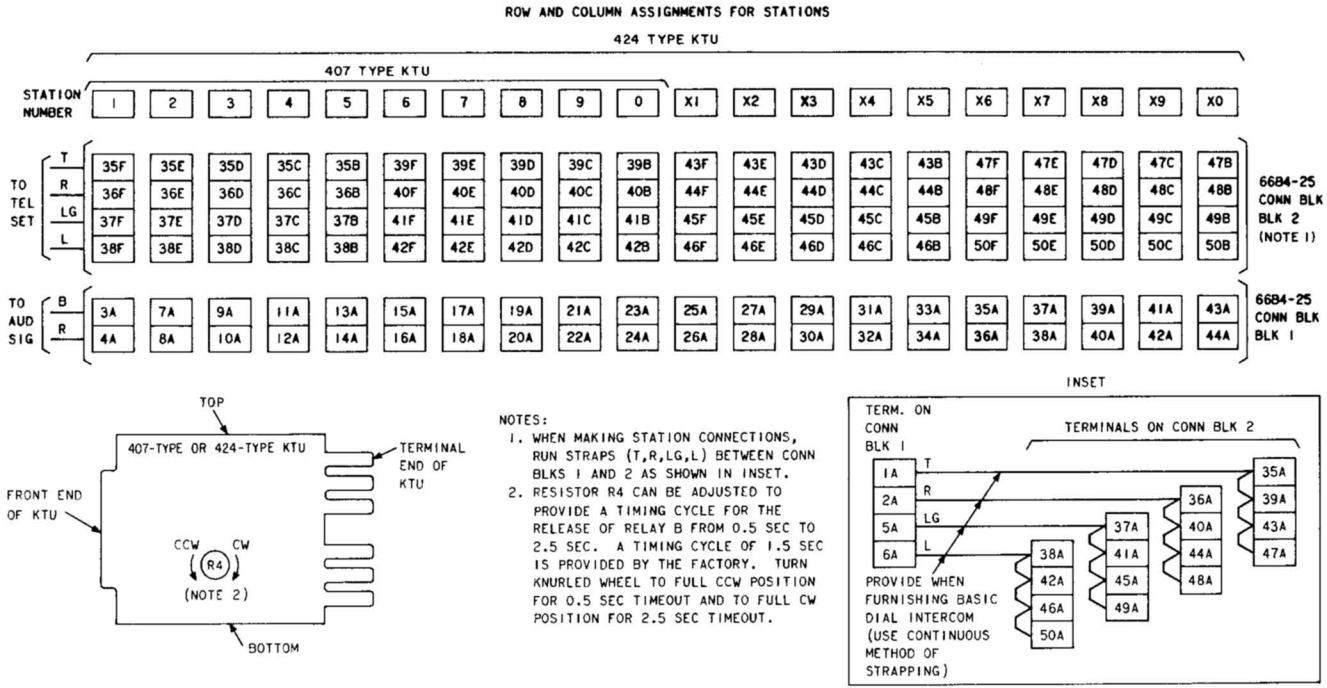

Fig. 42—Basic Dial Intercom, Station Connections

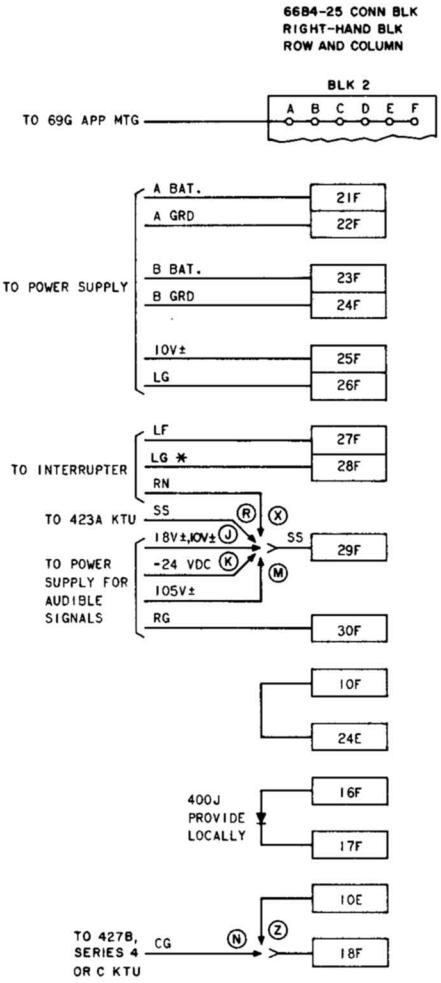

OPTIONS

Z	WITHOUT	"TOUCH-TONE" DIAL STATION
N	WITH	
M	RINGER	TYPE AUDIBLE SIGNALS
K	DC BUZZER OR BELL	
J	AC BUZZER OR BELL	
X	INTERRUPTED	
R	INTERRUPTED WITH STATION BUSY TONE	

NOTE:
A COMMON RINGER MAY NOT BE USED WITH THE R2 LEAD ON 407B (MD) KTU. A COMMON RINGER MAY BE USED WITH R2 LEAD ON 407C KTU.

* – PAIRED WITH LF LEAD TO PREVENT NOISE CONDITION.

Fig. 43—Deluxe Dial Intercom, Strapping and Power Supply Connections for 407B (MD) or 407C KTU

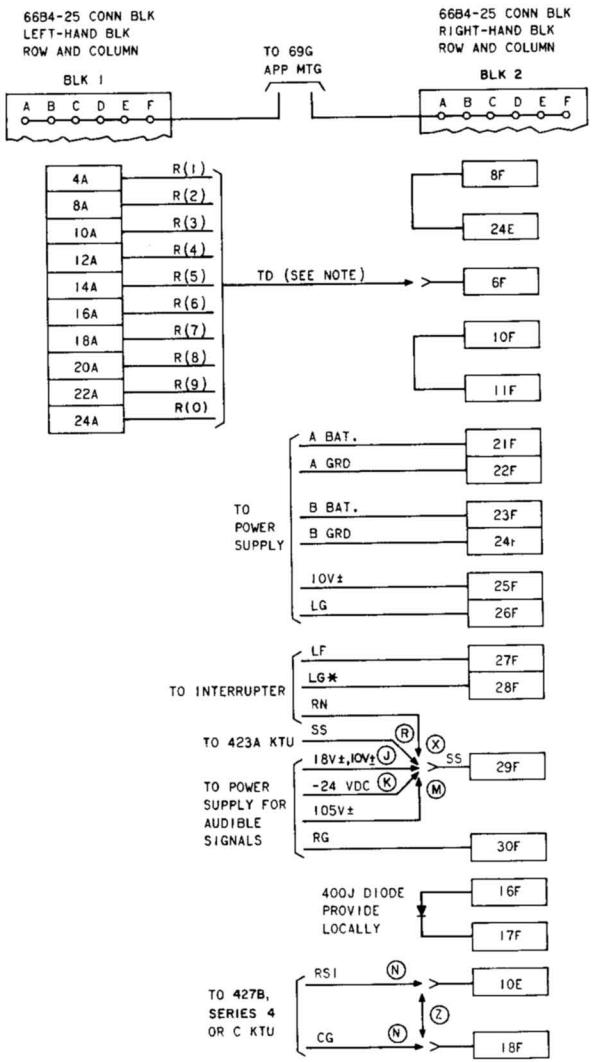

OPTIONS

Z	WITHOUT	"TOUCH-TONE" DIAL STATION
N	WITH	
M	RINGER	TYPE AUDIBLE SIGNALS
K	DC BUZZER OR BELL	
J	AC BUZZER OR BELL	
X	INTERRUPTED	
R	INTERRUPTED WITH STATION BUSY TONE	

NOTES:

1. ANY SELECTED R LEAD [R(1)-R(0)] MAY BE ASSIGNED AS THE INITIAL DIGIT OF A 2-DIGIT CODE. THE R LEAD SO ASSIGNED MAY NOT BE USED FOR A STATION CODE.
2. A COMMON RINGER MAY NOT BE USED WITH R2 LEAD OF 424A (MD) AND 424B (MD) KTU'S. A COMMON RINGER MAY BE USED WITH 424C KTU.

* - PAIRED WITH LF LEAD TO PREVENT NOISE CONDITION.

Fig. 44—Deluxe Dial Intercom, Strapping and Power Supply Connections for 424A (MD), 424B (MD), or 424C KTU

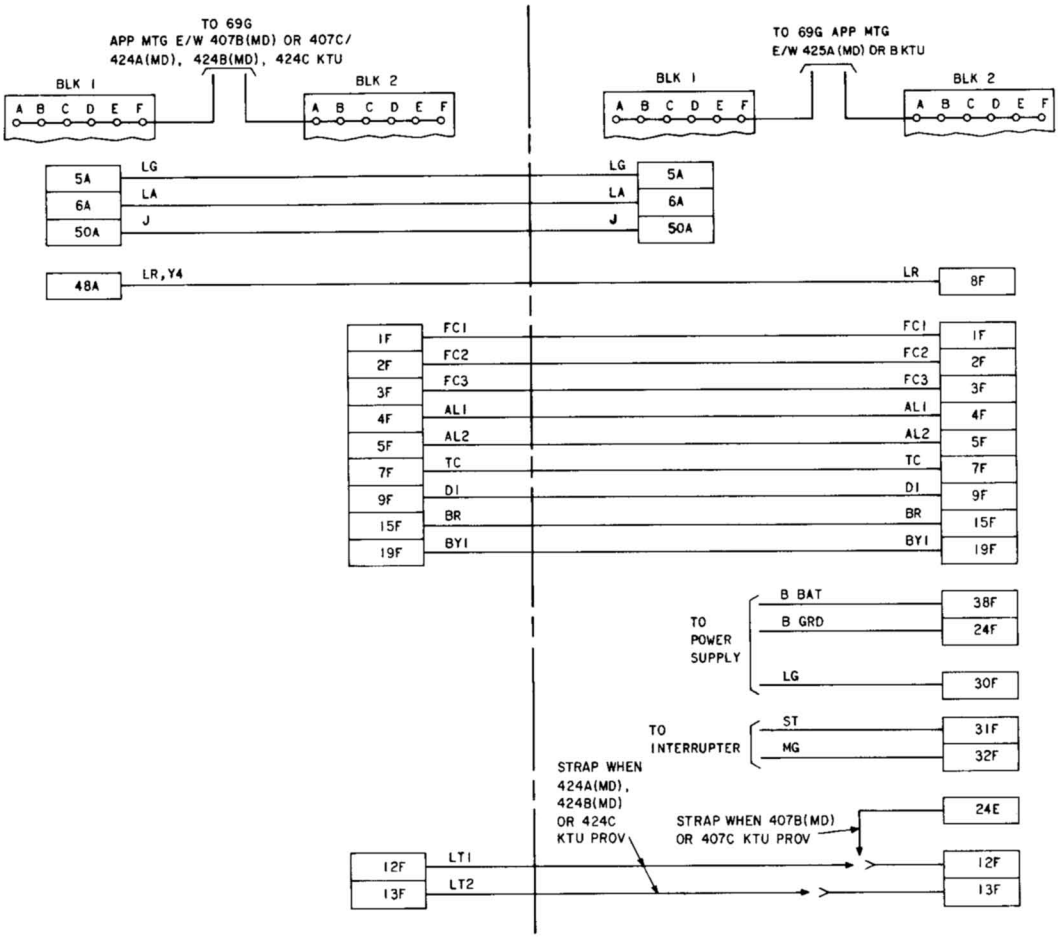

Fig. 45—Deluxe Dial Intercom, Strapping and Power Supply Connections for 425A (MD) or 425B KTU

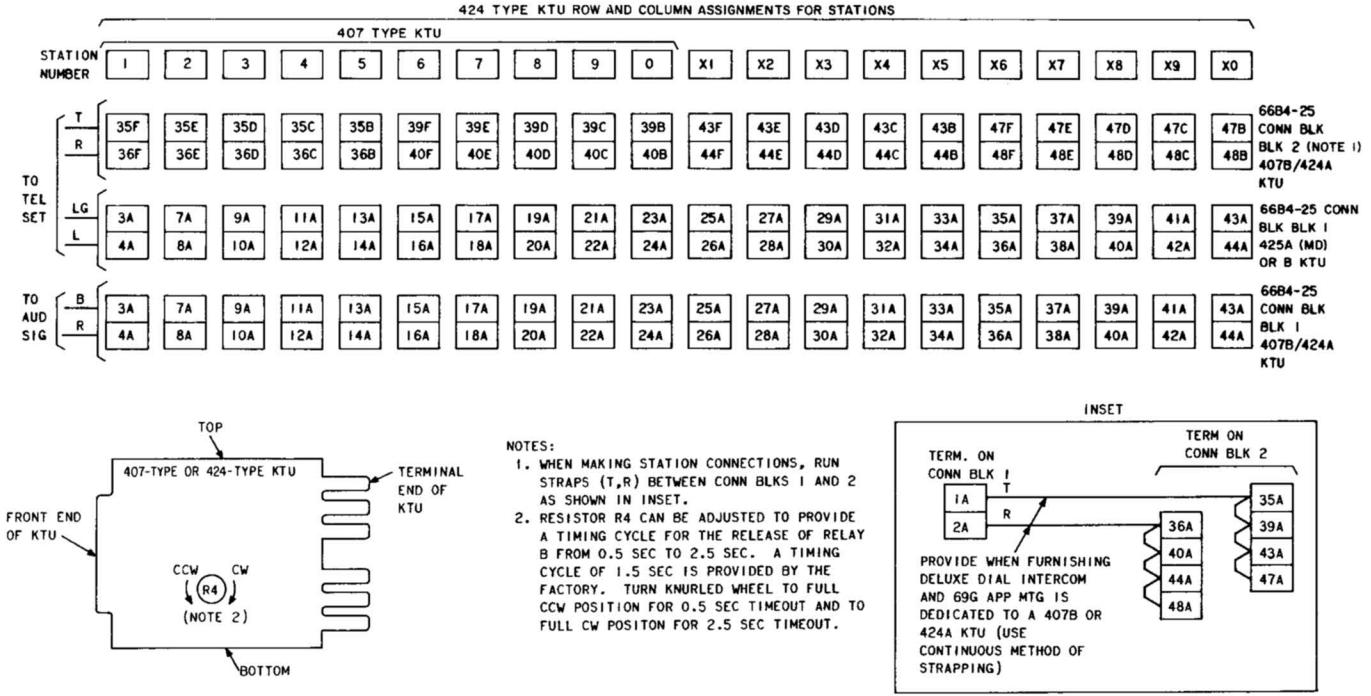

Fig. 46—Deluxe Dial Intercom, Station Connections

TABLE D

DELUXE DIAL INTERCOM CONNECTIONS FROM 407-TYPE KTU TO ASSOCIATED AND OPTIONAL KTUs

LEAD DESIG 407-TYPE	6684-25 CONN BLKS 407- OR 424-TYPE KTU ROW AND COLUMN ASSIGNMENT		ASSOCIATED KTUS TO PROVIDE DELUXE DIAL INTERCOM			OPTIONAL KTUS						
								"TOUCH-TONE"		PRESET CONFERENCE		
	BLK 1	BLK 2	425A(MD) OR 425B KTU	422B KTU	423A KTU	420A KTU	421A KTU* (DSS)	426A	427B SERIES 4 OR 427C	421A	413A	1A1 MAT. BLK
T	1A-E				•	•		•				
R	2A-E					•		•				
LA	6A-E		•									
Y1	45A-E			•			•		•			
Y2	46A-E			•			•		•			
Y3	47A-E						•		•			
LR			•									
Y4	48A-E			•			•		•			
Y5	49A-E			•			•		•			
J	50A-E		•	•	•					•		
FC1		1F-B	•									
FC2		2F-B	•									
FC3		3F-B	•									
AL1		4F-B	•									
AL2		5F-B	•									
TC		7F-B	•									
D1		9F-B	•									
RS1		10F-B							•			
TTG		14F-B				•		•	•			
BR		15F-B	•	•								
LK		16F-B			•							
RH		17F-B					•		•			
CG		18F-B					•		•			
BY1		19F-B	•		•							
SS		20F-B			•							
B (1-0)	As assigned for station connection (See Fig. 42)					•						
R (1-0)						•					•	•

* Connect required leads per Fig. 21.

TABLE E

DELUXE DIAL INTERCOM CONNECTIONS FROM 424-TYPE KTU TO ASSOCIATED AND OPTIONAL KTUs

LEAD DESIG 424-TYPE	6684-25 CONN BLKS 407- OR 424-TYPE KTU ROW AND COLUMN ASSIGNMENT		ASSOCIATED KTUS DELUXE DIAL INTERCOM						OPTIONAL KTUS				
									"TOUCH-TONE"		PRESET CONFERENCE		
	BLK 1	BLK 2	424A(MD) OR 425B KTU	422B KTU (UNITS)	422B KTU (TENS)	423A KTU	420A KTU	421A KTU* (DSS)	426A	427B SERIES 4 OR 427C	421A	413A	1A1 MAT. BLK
T	1A-E					•	•		•				
R	2A-E						•		•				
LA	6A-E		•										
Y1	45A-E			•	•			•		•			
Y2	46A-E			•	•			•		•			
Y3	47A-E							•		•			
LR			•										
Y4	48A-E			•	•			•		•			
Y5	49A-E			•	•			•		•			
J	50A-E		•		•	•					•		
FC1		1F-B	•										
FC2		2F-B	•										
FC3		3F-B	•										
AL1		4F-B	•										
AL2		5F-B	•										
TC		7F-B	•										
D1		9F-B	•										
RS1		10F-B								•			
LT1		12F-B	•	•									
LT2		13F-B	•		•			•					
TTG		14F-B					•		•	•			
BR		15F-B	•	•	•								
LK		16F-B				•							
RH		17F-B						•		•			
CG		18F-B						•		•			
BY1		19F-B	•			•							
SS		20F-B				•							
B(1-X0)	As assigned for station connection (See Fig. 42)						•						
R(1-X0)							•					•	•

* Connect required leads per Fig. 21.

SERVICE

1A2 KEY TELEPHONE SYSTEM

626A MODULAR PANEL

1. GENERAL

1.001 This addendum supplements Section 518-215-421, Issue 2. Place this pink sheet ahead of Page 1 of the section.

1.002 This addendum is reissued to provide information relating to the Federal Communications Commission's (FCC) Registration Program.

1.003 Issue 1 of this addendum was issued to correct Fig. 8 (FW Option) and Fig. 9 (S Option) and to show additional straps that are required when a 494A KTU is used.

2. CHANGES TO SECTION

Issue 1 Changes

2.001 On Page 11, Fig. 8 and 9 are obsolete. New Fig. 8 and 9 are shown in this addendum.

Issue 2 Changes

2.002 On Page 1, following paragraph 1.05, add the following:

1.06 After January 1, 1980, the 454C and 460C key telephone units (KTUs) must be used when providing their related services. Previously connected or Class C KTUs may be used for additions and maintenance at grandfathered installations for the life of the units, provided they are not modified. Class C stock may also be used in new installations after January 1, 1980.

NOTICE
Not for use or disclosure outside the
Bell System except under written agreement

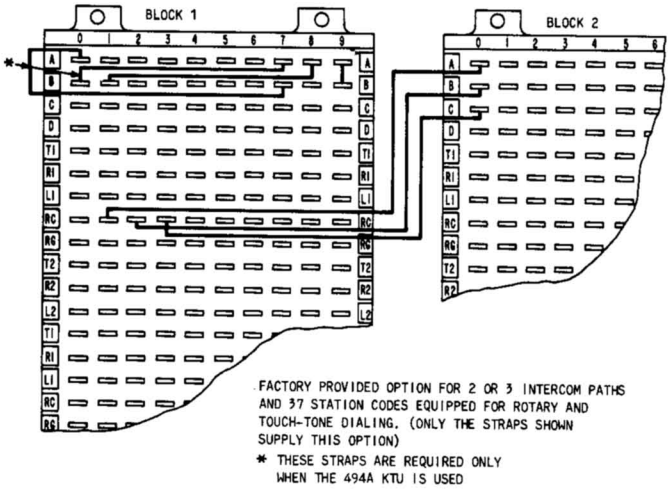

Fig. 8—FW Option

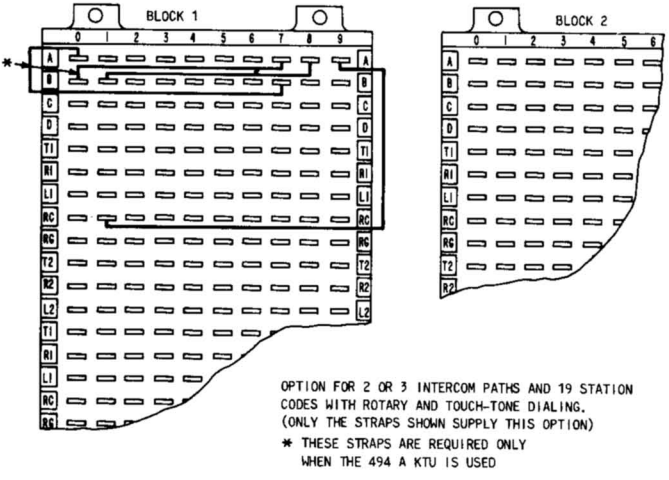

Fig. 9—S Option

SERVICE

1A2 KEY TELEPHONE SYSTEM

626A MODULAR PANEL

1. GENERAL

1.01 This section contains identification, installation, connection, and maintenance information for the 626A modular panel.

1.02 This section is reissued to:

- Provide information on the 444B, 469A, and 494A key telephone units (KTUs)
- Change the method of wiring options Y, N, and G.

1.03 This issue is based on CD- and SD-69658-01, Issue 4. If this section is to be used with equipment or apparatus reflecting a later issue of the drawing, reference should be made to the CD and SD to determine the extent of the change(s) and the manner in which the section may be affected.

1.04 ▶This issue of the section is based on the following drawings:

SD-69567-01—424B (MD) or C and 494A KTU
SD-69906-01—440A KTU
SD-69653-01—444A (MD) or B KTU
SD-69930-01—454A (MD) or B KTU
SD-69652-01—460A (MD) or B KTU
SD-69559-01—469A KTU
SD-69931-01—478B KTU
SD-82227-01—79B1 (MD) and 79B2 Power Unit

1.05 Refer to the following sections for information on associated KTUs and power units:

Section 518-215-402—424B (MD) or C, 440A, 478A and 494A KTUs
Section 518-215-403—469A KTU
Section 518-215-100—460A (MD) or B KTUs
Section 518-215-102—454A (MD) or B KTUs
Section 167-440-201—19-, 20-, and 21-Type Power Unit
Section 167-446-101—30-Type Power Unit
Section 167-454-101—67D2 Power Unit
Section 167-458-102—79B-Type Power Unit◀

2. DESCRIPTION

2.01 The 626A panel (Fig. 1) is designed for use with the 1A2 Key Telephone System (KTS). It provides a means for interconnecting a ▶number of button-per-path type dial intercoms.◀ The 626A panel can accommodate intercom configurations of 1, 2, or 3 paths with capacities of 19 or 37 stations. ▶Intercom paths are selected by operation of the associated button on KTSs.◀ Rotary and/or TOUCH-TONE® dialing can be provided. Lead terminations are provided in a quick-connect field to facilitate connecting optional features and for connecting to station blocks of a 1A2 KTS cross-connect field.

2.02 The 626A panel measures 8-1/2 inches wide, 18-1/2 inches high, and 6 inches deep. ▶It is equipped with eight 914B connectors paired vertically to accept 4- or 8-inch KTUs. The connector section is arranged to mount on a dedicated basis the KTUs listed in Table A. When the 4-inch 469A KTU (lamp extender circuit) is used in the panel, a snap-in guide assembly (841-683-501) must be installed over connector J2B.◀

2.03 The 2- and 3-path access circuits provide dial tone, selector seizure, and flashing lamps to all stations during selector seizure (dialing and ringing) and steady lamps to all stations while the circuit is in the busy mode. ▶The flashing lamps inform the customer that a call is in progress (selector seized) and no more calls can be initiated until the lamp goes steady or off (selector released). If 1-path intercom is provided (option Y, N or G),

NOTICE
Not for use or disclosure outside the
Bell System except under written agreement

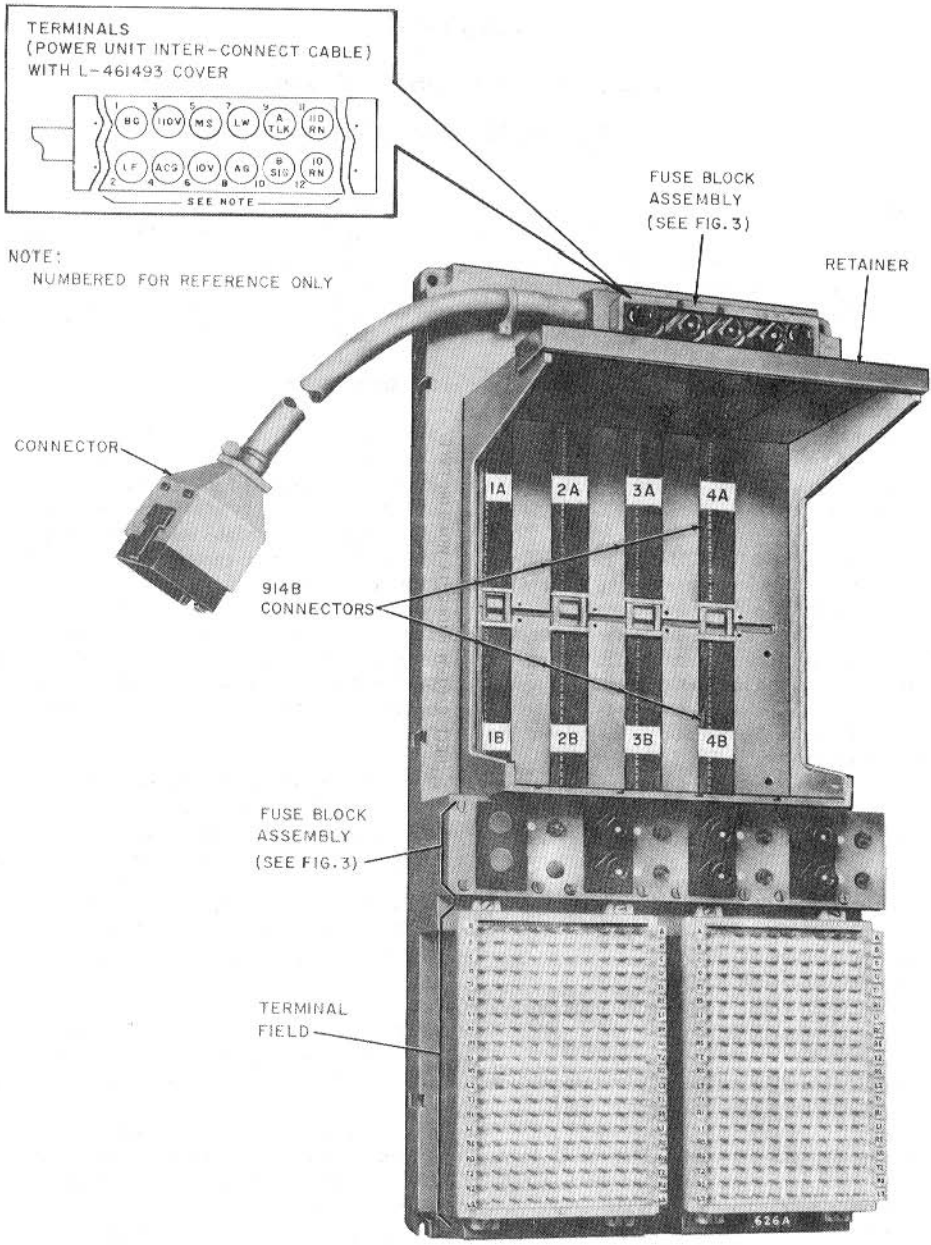

Fig. 1—626A Panel

TABLE A

626A PANEL DEDICATED KTUs

CONNECTOR	KEY TELEPHONE UNIT
1A and 1B	424B(MD) or C--Dial Intercom Ckt. Rotary Only
	494A--Dial Intercom Ckt. TOUCH-TONE Only
2B Only*	469A--Lamp Extender Ckt.
2A and 2B	460A(MD) or B--2-Path Intercom Ckt. 454A(MD) or B--3-Path Intercom Ckt.
3A and 3B	444A(MD) or B--Selector Extender Ckt.
4A and 4B	440A--TOUCH-TONE Adapter Ckt.
	478A--TOUCH-TONE Adapter Ckt.

* A 469A KTU requires a snap-in guide assembly (841683501) to hold the 4-inch circuit pack in place.

steady lamp only is supplied and dial tone is not furnished except for the 494A KTU. The selector extender circuit is used with the intercom selector to extend the dial code capability of the intercom from 19 codes to 37 codes. The lamp extender circuit is used to provide current to lamps 0-19 of the 37-code 1-path intercom (option Y). Audible signaling in the 2- and 3-path intercoms can be either a single spurt or an interrupted signal, while the audible signal for the 1-path intercom is a single spurt ring.

2.04 Power for the 626A panel is provided by an external power source and is fed to the panel by a plug-ended power cable. The power cable is located at the top of the panel above the KTU connectors. Fuses are provided in a fuse block, located just below the power cable, for the -24V talk, -24V signal, and the 10 Vac interrupted ringing sources (Fig. 2 and 3). Located below the KTU connectors and above the terminal field are seven lamps and six fuses. One lamp is connected to the code selector (424B/C or 494A KTU) lamp lead to indicate the status of the selector. The remaining six lamps and six fuses are connected to the path access circuit lamp leads on a 2-lamp/2-fuse per-path basis (Fig. 3).

2.05 The lower section of the 626A panel has two connecting blocks, light yellow in color, that contain 66-type quick-connect terminals (Fig. 4). These blocks are 20 terminals high by 10 terminals wide. The upper 4 horizontal rows of the connecting blocks contain power option and function terminals to interconnect the various intercom arrangements and optional features. The lower 16 horizontal rows of the connecting blocks provide the station cross-connect terminals for station codes and for the first- and second-path intercom stations. The third intercom path access circuit common leads are brought out on rows 1 and 2 of the second connecting block. Straps must be run to a separate 66-type connecting block (Fig. 5) for distribution to the third-path intercom station.

2.06 The total ±10V lamp power required per intercom path is approximately 1.6 amperes (37 station lamps and 2 maintenance lamps). The maximum ±10V power required is dependent on the number of intercom paths and the number of stations on each path. In a fully equipped 3-path intercom, power required for the lamp steady mode is about 4.8 amperes. Lamp flash power requirements do not exceed 1.6 amperes as the selector serves

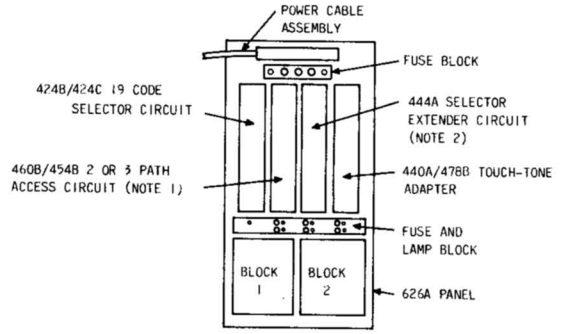

NOTES:
1. THE 460B KTU IS A 2-PATH ACCESS CIRCUIT. THE 454B KTU IS A 3-PATH ACCESS CIRCUIT.
2. THE 444A KTU CAN ONLY BE USED WITH THE 424B OR 424C KTU.

Fig. 2—KTU Arrangement, 626A Panel

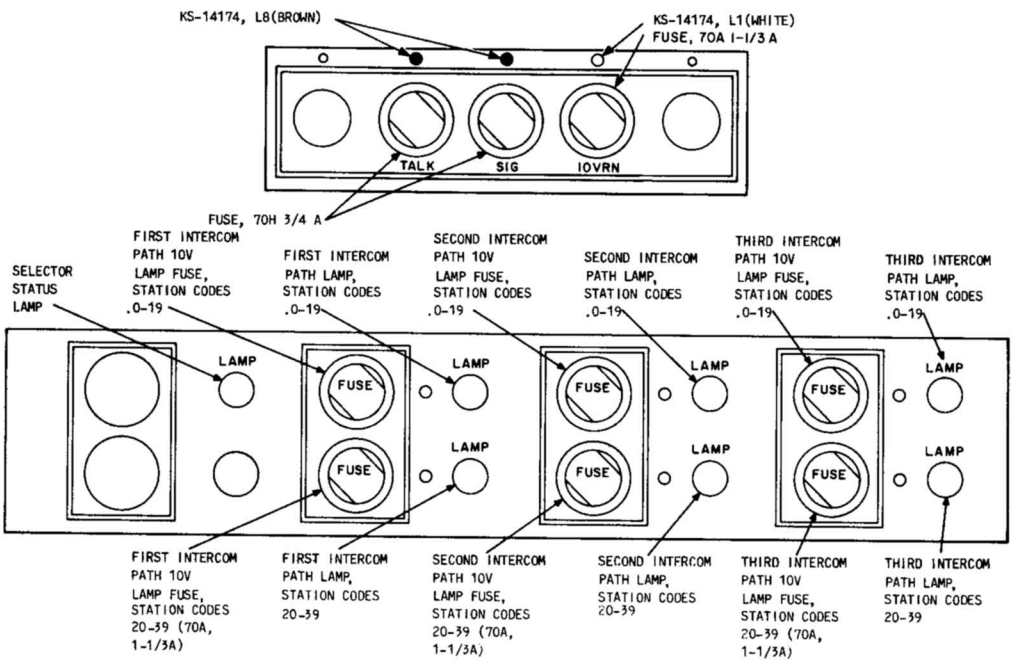

Fig. 3—Fuse and Lamp Arrangement, 626A Panel

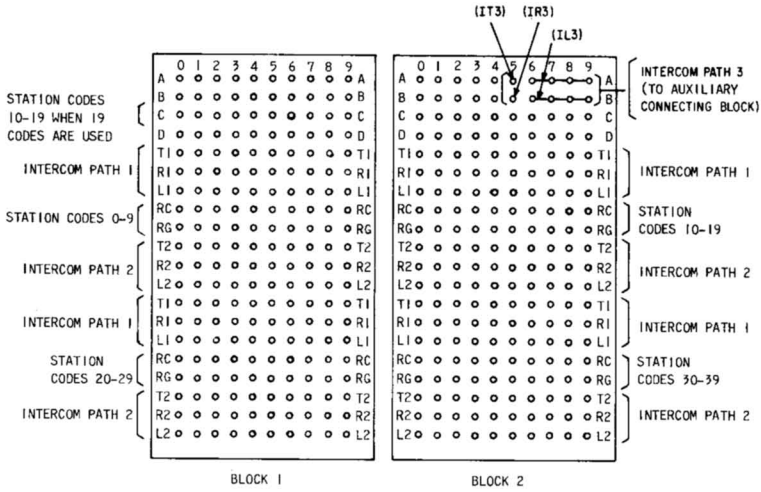

Fig. 4—Intercom Path and Station Code Terminations, 626A Panel

only one path at a time. The 67D2 power unit is recommended for intercom systems with large lamp multiples.

ORDERING GUIDE

(a) ***Basic Panel:***

- Panel, Modular, 626A

(b) ***Replaceable Components:***

- Lamp, 51A
- Fuse, 70A (1-1/3 amps)
- Fuse, 70H (3/4 amp)
- Designation Pin (Indicator, Fuse)

  KS-14174, L1—White

  KS-14174, L8—Brown

(c) ***Associated Apparatus*** (Order Separately):

- Assembly, Guide, Snap-in, 841683501

Note: The guide assembly is required only when the lamp extender circuit (469A KTU) is used.

- Unit, Telephone, Key 424B (MD) or C (Dial Intercom 19-Code Selector)

Note: The 424A (MD) KTU is not recommended for use in the 626A panel as it is not compatible with the 444A (MD) or B KTU.

- Unit, Telephone, Key 494A (TOUCH-TONE Selector)

Note: The 494A KTU should be used in lieu of the 424-type KTU when TOUCH-TONE only is provided on intercom installations. The 494A does not require a 440A or 478B TOUCH-TONE adapter, and it cannot be used for a deluxe intercom arrangement.

- Unit, Telephone, Key 440A (TOUCH-TONE Adapter)

  or

  Unit, Telephone, Key 478B (TOUCH-TONE Adapter Circuit)—order when TOUCH-TONE service is provided

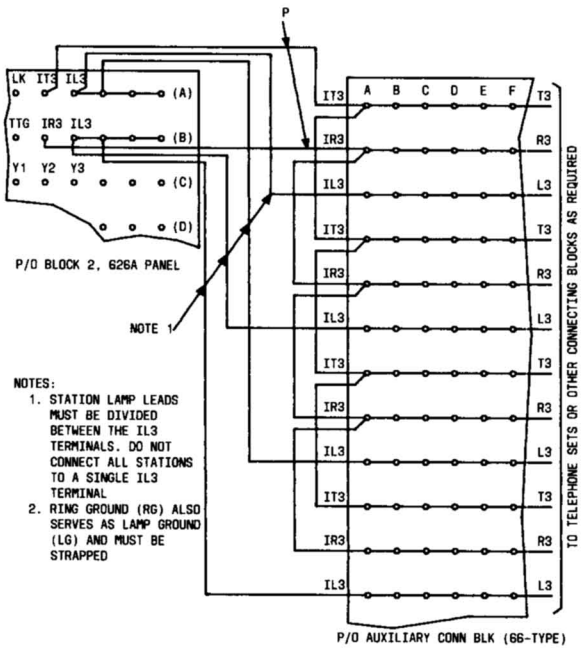

Fig. 5—Typical Arrangement for Connecting Stations to Third Intercom Path

- Unit, Telephone, Key 444A (MD) or B (Selector Extender Circuit)—extends the codes of the 424B (MD) or C and 494A code selector to 37 codes

- Unit, Telephone, Key 454A (MD) or B (3-Path Access Circuit)—order when 3-path intercom service is provided

- Unit, Telephone, Key 460 (MD) or B (2-Path Access Circuit)—order when 2-path intercom service is provided.

- ♦Unit, Telephone, Key 469A (Lamp Extender Circuit)—order when 1-path intercom with 37 station codes is provided.♦

- Cord, P12D (Power Interconnect Cable)—order when necessary to extend the panel power cable

- Unit, Power, 79B1 (MD) or 79B2

- Cord, Power—order length required:

  824013288 (P-40J328) (4 feet)

  824013296 (P-40J329) (6 feet)

  824010995 (P-40J099) (12 feet)

- Unit, Power (19-, 20-, 29-, or 30-Type)—order as required for a separate power source if

interrupted power can be obtained from an existing 584C panel or 232-type KTU

- Unit, power, 67D2—order as required (see paragraph 3.06)
- Block, Connecting, 92A—order as required to connect separate power unit to panel
- Unit, Telephone, Key 232C (Interrupter Type Key Telephone Unit)—used with separate power unit to supply interrupted voltages to panel
- Block, Connecting, 66B4-25

or

- Block, Connecting, 66B3-50—order as required for terminating common leads for third intercom path
- Block, Connecting, 66M1-50—order as required for preset conference arrangement
- Diode, KS-21765, L1, or equivalent—order as required for preset conference arrangement
- Insulator, Terminal, C Clip—order as required
- Cover, 151A
- Cover, 153A, End Cap
- Backboard, 185A1 (yellow)—order as required
- Adapter, Plug, Power Cord, Hubbell BL-12433
- Adapter, Bridging, 183B2—order as required.

3. INSTALLATION

3.01 The 626A is a wall-mounted panel and should be located with or in close proximity to 1A2 KTS panels and power sources.

3.02 Refer to the following sections for information on Key Telephone Systems:

- 518-010-101—Centralized Key Telephone Installations
- 518-010-105—Grounding and Special Protection Requirements
- 518-215-419—620A, 641A, and 642A Modular Panels.

3.03 Use care when transporting and unpacking the modular panel and KTUs to prevent damage to them.

3.04 Power for the 626A panel may be supplied by a 79B1 (MD) or 79B2 power unit associated with a 1A2 KTS. In the event the power cord of the panel is too short to connect to the power unit, a P12D cord can be used.

Warning: 115 volts may be present on the ⧫105V⧫ 30-Hz RN terminal of the 626A panel when power is applied. Install a C clip terminal insulator over the ⧫105V⧫ 30-Hz RN terminal.

3.05 Where power cannot be supplied by a 79B1 (MD) or 79B2 power unit, power can be supplied from a separate 19-, 20-, 29-, or 30-type power unit. A 92A connecting block (Fig. 6) provides a means for connecting the power cable of the 626A panel to the power unit. An interrupter must be provided with the separate power unit to furnish the interrupted voltages to the panel. All straps between the power unit and the 92A connecting block are made with 18-gauge (solid) wire.

Note: In the 626A modular panel the Ring Ground (RG) also serves as Lamp Ground (LG) and must be connected on the station cross-connect field to the lamp grounds (continuous strapping is required).

3.06 For modular panel installations that are subject to expansion or where a large lamp multiple is anticipated, a 67D2 power unit, for 10 Vac power, can be used with two 92A connecting blocks to provide the required power for the lamps (Fig. 7).

4. OPTIONS AND FEATURES

4.01 The various optional arrangements for the 626A panel are listed in Table B.

FW Option

4.02 The FW option (Fig. 8) is a factory-provided option. The FW option provides for two or three intercom paths with 37 station codes.

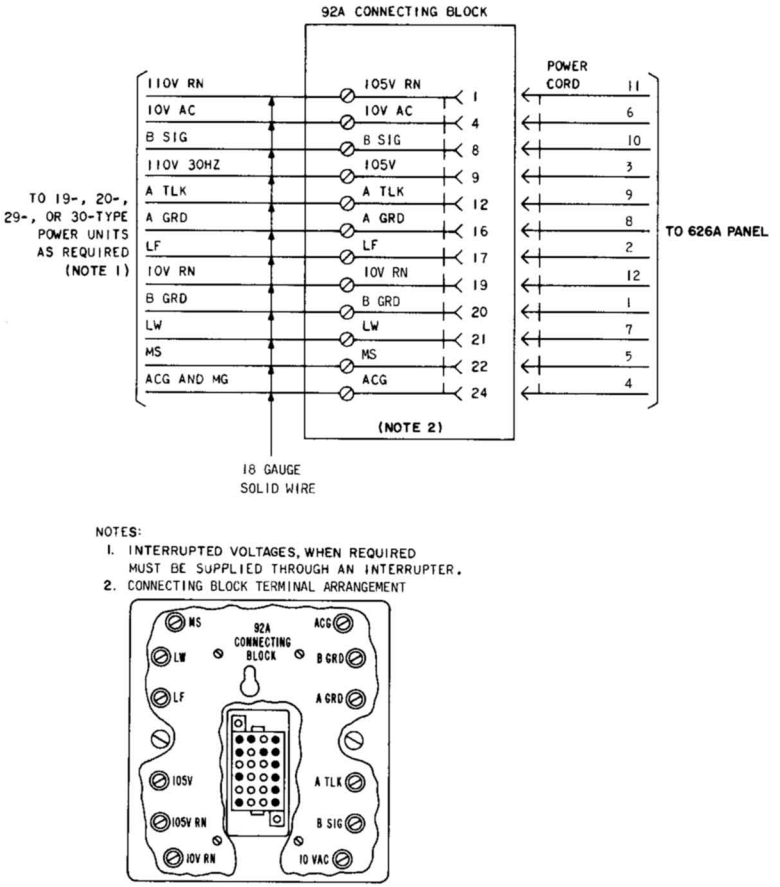

Fig. 6—19-, 20-, 29-, or 30-Type Power Unit Connection Using 92A Connecting Block

Stations can utilize both rotary and TOUCH-TONE dialing. Digits 1, 2, and 3 are used as transfer digits and are not available for station codes. Where the third intercom path is used, an external (66-type) connecting block (Fig. 5) is required to connect the common leads. ▶Interrupted signaling is provided but single spurt signaling is available by applying option G.◀



Transfer digits are not restricted to digits 1, 2, or 3 ▶except when using a 494A KTU.◀ Any digit(s) can be used as a transfer digit(s). However, the digit(s) selected as a transfer digit(s) is forfeited as a station code.

4.03 See Fig. 2 for location of the following KTUs which are required for FW option:

- 424B or C—19-code selector circuit
- ▶494A—TOUCH-TONE selector (when TOUCH-TONE only is required)

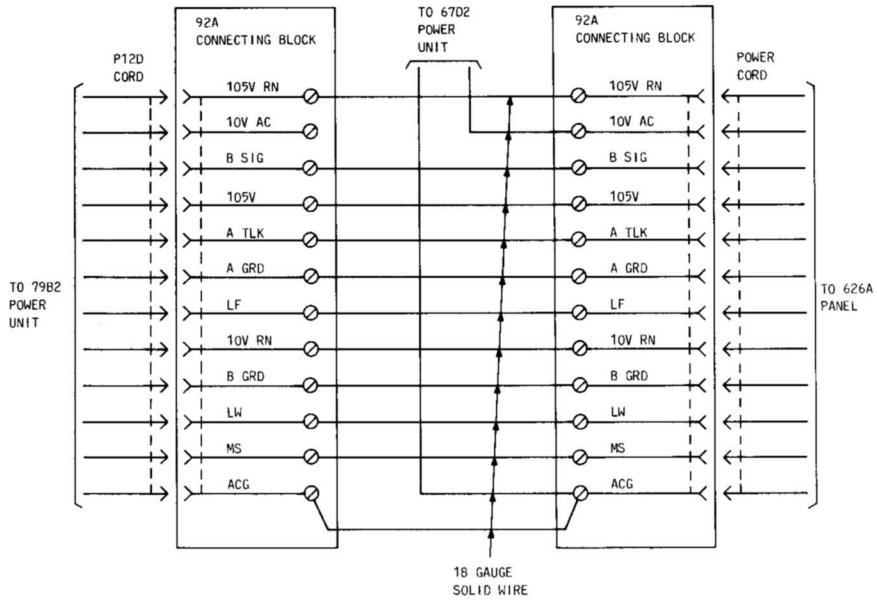

Fig. 7—67D2 Power Unit Connections Using 92A Connecting Block

Note: If a 494A KTU is used, a 440A or 478B TOUCH-TONE adapter is not required. (If a TOUCH-TONE adapter is not provided, Z option [Fig. 12] must be applied.)◀

- 460B—2-path access circuit

  or

- 454B—3-path access circuit

- 444A—Selector extender circuit

- ▶440A or 478B—TOUCH-TONE adapter, if required.◀

S Option

4.04 The S option (Fig. 9) provides for two or three intercom paths with 19 station codes. Stations can utilize both rotary and TOUCH-TONE dialing. Digit 1 is used as the transfer digit and is not available for a station code. Station codes 10 through 19 are connected to row C, terminals 0 through 9 on block 1 of the 626A panel (Fig. 4). Where a third intercom path is used, an external (66-type) connecting block (Fig. 5) is required to connect the common leads. ▶Interrupted signaling is provided but single spurt signaling is available by applying option G.◀

4.05 See Fig. 2 for location of the following KTUs which are required for S option:

- 424B or C—19-code selector circuit

  or

- ▶494A—TOUCH-TONE selector (when TOUCH-TONE only is required)

  Note: If a 494A KTU is used, a 440A or 478B TOUCH-TONE adapter is not required. (If a TOUCH-TONE adapter is not provided, Z option [Fig. 12] must be applied.)◀

- 460B—2-path access circuit

  or

TABLE B

626A PANEL OPTIONS

OPTIONS	INTERCOM PATHS	STATION CODES		REFER TO FIGURE
FW*	2 or 3	37	Rotary and/or TOUCH-TONE dialing	8
S†	2 or 3	19		9
Y	1	37		10
N†	1	19		11
Z	Non-TOUCH-TONE dialing			12
E	Interrupted ± 10V buzzer			13
X	Interrupted 105V 30-Hz ringer			14
G	Uninterrupted (single spurt) ± 10V buzzer or for 18 Vac, 24 Vdc, ground, or as required for signaling purposes other than provided (may require an external power source)			15

Note: Ring ground (RG) also serves as lamp ground (LG) and must be connected on the station cross-connect field to the lamp grounds (continuous strapping is required).

* Factory-provided option. The 1, 2, and 3 digits are factory-wired as transfer digits and cannot be used as station codes. Other digits can be used as transfer digits, but it is not recommended. In the event it becomes necessary to use other digits, consult supervisor.

† When no more than 19 codes are provided, obtain the R(10) to R(19) codes from the terminals on block 1, row C, terminals 0 to 9, respectively, and not from the R(10) to R(19) terminals of block 2.

- 454B—3-path access circuit
- ▶440A or 478B—TOUCH-TONE adpter, if required.◀

Y Option

4.06 The Y option (Fig. 10) provides for one intercom path with 37 station codes. Stations can utilize both rotary and TOUCH-TONE dialing. Digits 1, 2, and 3 are used as transfer digits and are not available for station codes. Option G must be used with the Y option to provide audible signaling.

4.07 See Fig. 2 for location of the following KTUs which are required for Y option:

- 424B or C—19-code selector circuit

or

- ▶494A—TOUCH-TONE selector (when TOUCH-TONE only is required)

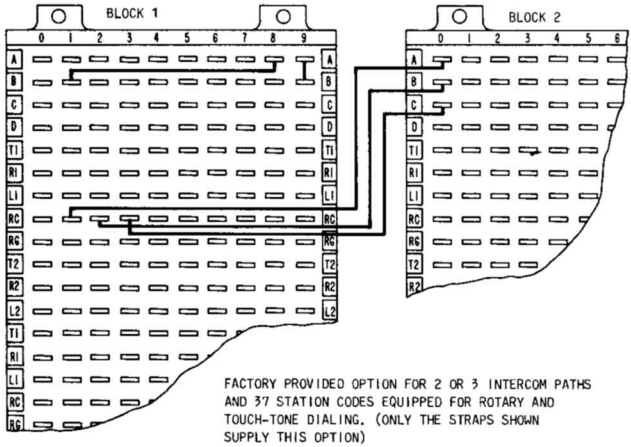

Fig. 8—FW Option

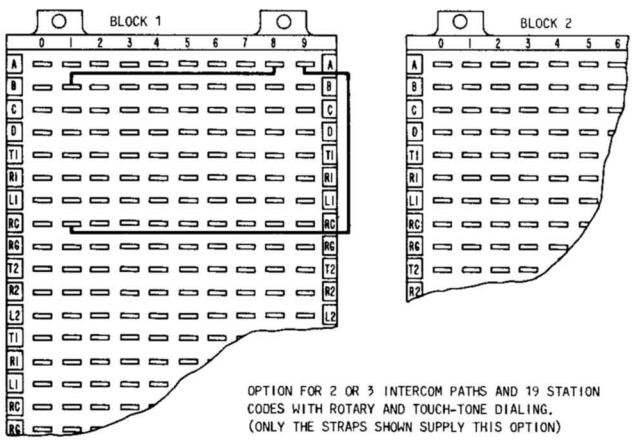

Fig. 9—S Option

Note: If a 494A KTU is used, a 440A or 478B TOUCH-TONE adapter is not required. (If a TOUCH-TONE adapter is not provided provide Z option [Fig. 12] must be applied.)

- 469A—Lamp extender (requires a guide assembly to be installed over connector J2B; see ORDERING GUIDE for type of guide assembly)
- 444A or B—selector extender circuit
- 440A or 478B—TOUCH-TONE adapter, if required.

N Option

Note: This option is a standard 1A2 KTS offering that can be provided with the 641A

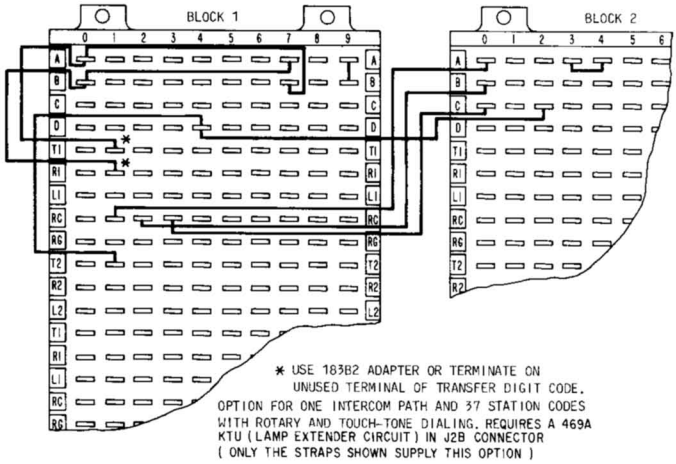

Fig. 10—▶Y Option◀

modular panel (see Section 518-215-419). It is included here for those installations that are expected to expand to two or three intercom paths and where more station codes will be required in the future.

4.08 The N option (Fig. 11) provides for one intercom path with 19 station codes. Stations can utilize both rotary and TOUCH-TONE dialing. Digit 1 is used as the transfer digit and is not available for a station code. Station codes 10 through 19 are connected to row C, terminals 0 through 9 on block 1 of the 626A panel (Fig. 4). Option G must be used with the N option to provide audible signaling.

4.09 See Fig. 2 for location of the following KTUs which are required for N option:

- 424B or C—19-code selector circuit

or

- ▶494A—TOUCH-TONE selector (when TOUCH-TONE only is required)

Note: If a 494A KTU is used, a 440A or 478B TOUCH-TONE adapter is not required. (If a TOUCH-TONE adapter is not provided, Z option [Fig. 12] must be applied.)

- 440A or 478B—TOUCH-TONE adapter, if required.◀

Z Option

4.10 The Z option (Fig. 12) is required when rotary dial service is provided. It consists of a strap on block 1 of the 626A panel between row A, terminal 2, and row B, terminal 2. The Z option must be removed if the intercom is changed to TOUCH-TONE dialing.

E Option

4.11 The E option (Fig. 13) provides interrupted 10 Vac to operate station buzzers when the station codes are dialed. Option E consists of a strap on block 1 of the 626A panel between terminals 4 and 5 on row A.

X Option

4.12 The X option (Fig. 14) provides interrupted 105V 30-Hz ringing to operate station ringers when station codes are dialed. Option X consists of a strap on block 1 of the 626A panel between terminals 5 and 6 on row A.

▶***NOTE:*** Do not use X option with a 494A KTU—damage to the KTU may result.◀

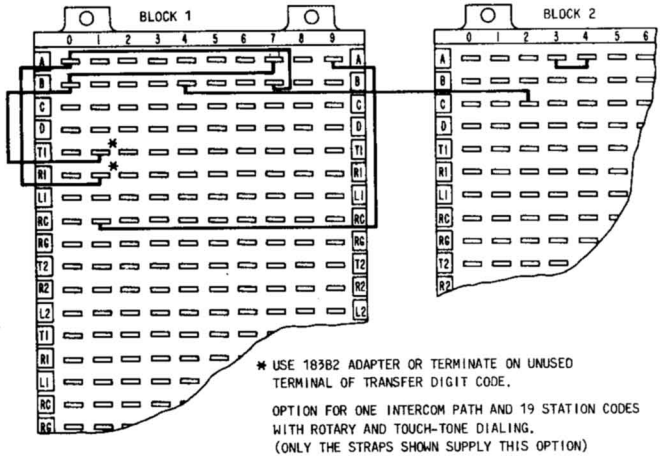

Fig. 11—▶N Option◀

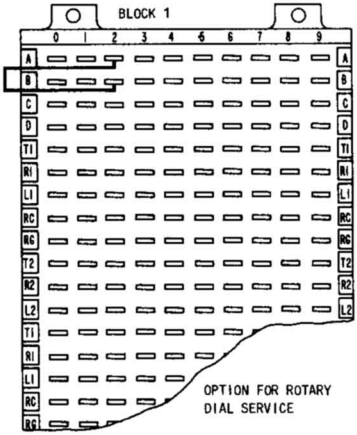

Fig. 12—Z Option

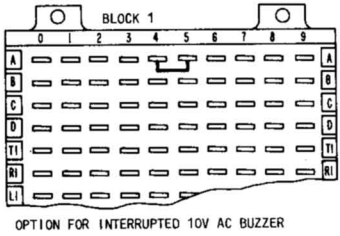

Fig. 13—E Option

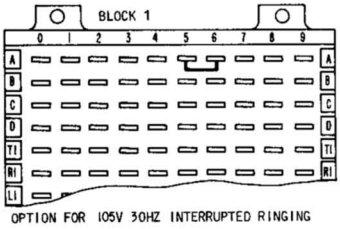

Fig. 14—▶X Option◀

G Option

4.13 The G option (Fig. 15) is used with 1-path intercom only and provides uninterrupted 10 Vac power (single spurt) to operate station buzzers when the station codes are dialed. Option G may also be 18 Vac, 24 Vdc, ground, or other voltages that may be required for signaling purposes.

When any potential (voltage or ground), other than 10 Vac, is to be used for (uninterrupted single spurt) signaling, the potential must be connected to block 1, row A, terminal 5 of the 626A panel by a separate lead. ▶The duration of the single spurt signal is adjustable on the 424-type KTU (see Section 518-215-402).◀

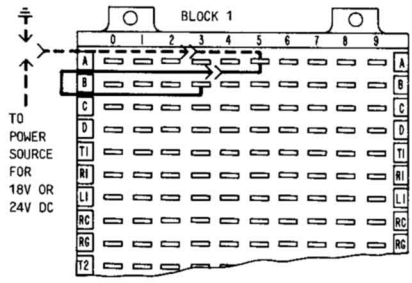

Fig. 15—G Option

Preset Conference

4.14 Preset conference is a feature which permits up to five preselected intercom stations to be signaled simultaneously by dialing a predesignated code.

4.15 To connect preset conference, a lead is strapped from the R( ) terminal of the designated code to an external 66-type connecting block for distribution, via diodes (5 maximum), to the signaling leads of the selected conference stations. A typical preset conference arrangement is shown in Fig. 16. As illustrated in Fig. 16, stations 8, 18, 27, 28 and 29 are signaled when code 39 is dialed. In this arrangement, code 39 cannot be used as a station code.

4.16 When 10 Vac signaling is used, the sound of the audible signal will be noticeably different on a conference call than on a normal call due to the effect of the diode on the signal voltage.

5. MAINTENANCE

5.01 Maintenance of the 626A panel is limited to normal station repairs (including cable and inside wire), wiring checks of the panel, replacement of defective lamps and fuses, and replacement of defective KTUs. The internal circuitry of the 626A panel consists of a flexible printed board and requires no maintenance.

5.02 Before considering the replacement of the 626A panel, make a check of the following:

- Fuses in place and not blown
- Lamps properly seated and not burnt out
- KTUs securely mounted in proper connectors with retainers in place
- Wiring on connecting blocks not loose, broken, or shorted
- Power cable is securely connected
- Proper options have been connected.

5.03 When it is suspected a KTU is defective, replace the KTU with one known to be in good working order. This will determine if the KTU is defective or if there is a trouble external to it. Should a replacement KTU not clear a trouble, the trouble is external and ***the original KTU should be returned to service.*** No field maintenance is to be performed on KTUs.

5.04 KTU functions are as follows:

- ***424B (MD) or C***—Basic selector-only 19-code rotary dial intercom circuit, capacity of a maximum of nineteen 1- and 2-digit codes. ▶Provides single spurt signaling for station selection◀ (refer to CD- and SD-69567-01).
- ***440A***—Adapter circuit used to convert the multifrequency signals (TOUCH-TONE) from the telephone to contact closures which supply ground to the proper leads of the 424B (MD) or C selector (refer to CD- and SD-69906-01).
- ▶***444A (MD) or B***—Extender circuit which expands the capacity of the 424B (MD), or C KTU and the 494A KTU to 37

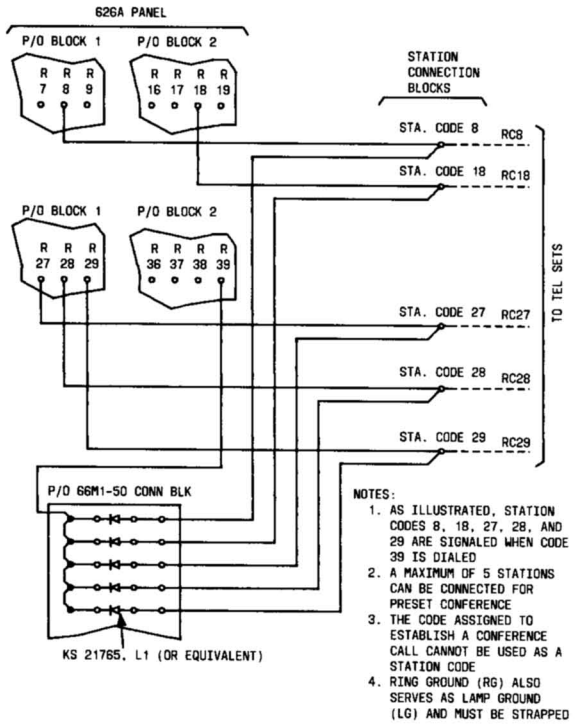

Fig. 16—Typical Preset Conference Arrangement

codes by providing two additional transfer digits. The 444B is the same as the 444A (MD) except two option plugs have been added which have application in the 21A Communication System. The 444B should be used as supplied from the factory, that is, with the option plugs in position 2-3 and 5-6 (refer to CD- and SD-69653-01).◀

Note: The 424A (MD) is not compatible with the 444A (MD) or B KTU.

- ***454A (MD) or B***—3-path access circuit containing three separate intercom paths. Provides dial tone, flashing lamps to all stations during station selection, and steady lamps during a busy condition. Provides talking battery for all three intercom paths. Has the common control circuitry to connect the 424B (MD) or C ▶or 494A◀ KTU to one path at a time ▶(with the 424B (MD) or C KTU, single spurt or interrupted ringing can be provided).◀ The 454-type KTU has

a detect circuit to free the 424B (MD) or C KTU at the proper time (refer to CD- and SD-69930-01).

- ***460A (MD) or B***—2-path access circuit with the same features as the 454B KTU except it operates on two intercom paths (refer to CD- and SD-69652-01).

- ***469A***—Lamp extender circuit to provide current to lamps 0-19 of 37-code single-path intercom. This is a 4-inch KTU and, when used in the 626A panel, requires the installation of a guide assembly over connector J2B (refer to CD- and SD-69559-01).◀

- ***478B***—Adapter circuit used to convert the multifrequency signals (TOUCH-TONE) from the telephone to supply ground to the proper leads of the 424B (MD) or C selector. When used with the 626A panel, Y (factory-provided) option must be provided on the 478B KTU. Can be used with the 626A panel in place of the 440A KTU (refer to CD- and SD-69931-01).

- ▶***494A***—TOUCH-TONE Selector circuit which provides basic TOUCH-TONE only intercom service for 19 codes. It has single spurt ringing, 10 Vac buzzers and line busy lamps. The 494A KTU also has low-frequency dial tone, capability of expansion to 37 codes, and can be used for multipath intercom arrangements when used in conjunction with the 454- and 460-type KTUs. Screw switches S1 and S2 allow disconnection of the internal battery feed circuit for operation in button-per-path intercom arrangements. For single-path intercoms, the switches must be closed to supply talking battery to the tip and ring leads. This unit cannot be used for deluxe intercom arrangements (refer to CD- and SD-69567-01).◀

5.05 As an aid for maintenance, Fig. 17 is provided to identify the terminals of the connecting blocks in the 626A panel. The letters above the terminals are the terminal designations. The terminals are symbolized in order to identify them with a connector. The numbers below the terminals indicate the pin number of the connector. An asterisk below the terminal indicates the terminal is connected to the power cable.

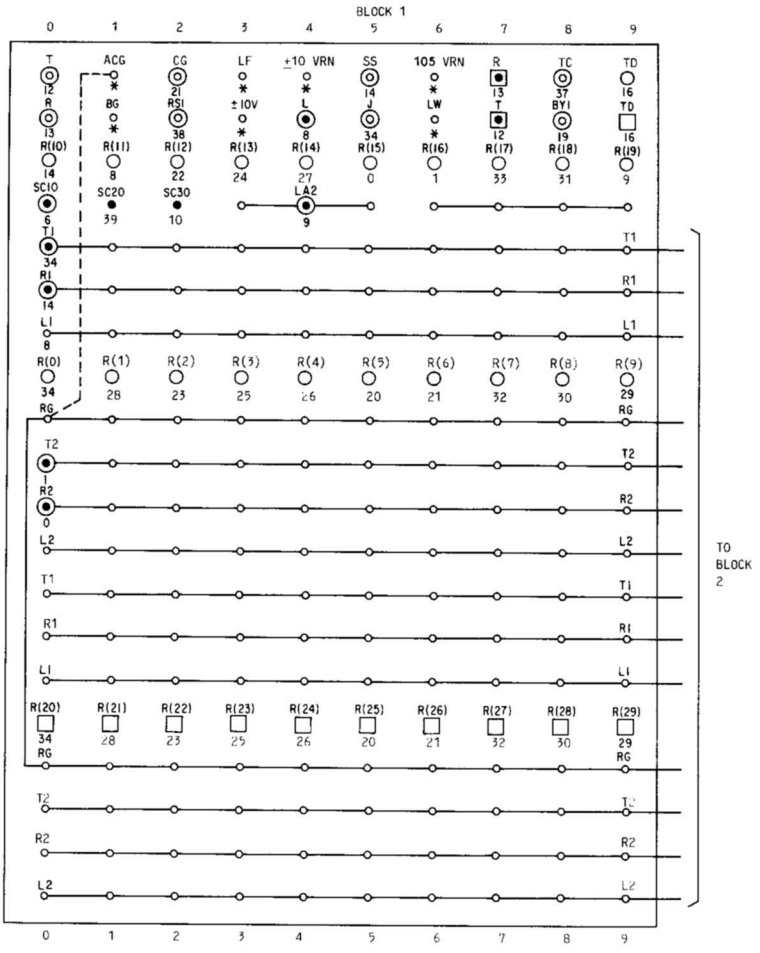

Fig. 17—Connecting Block Terminal Identification (Sheet 1 of 3)

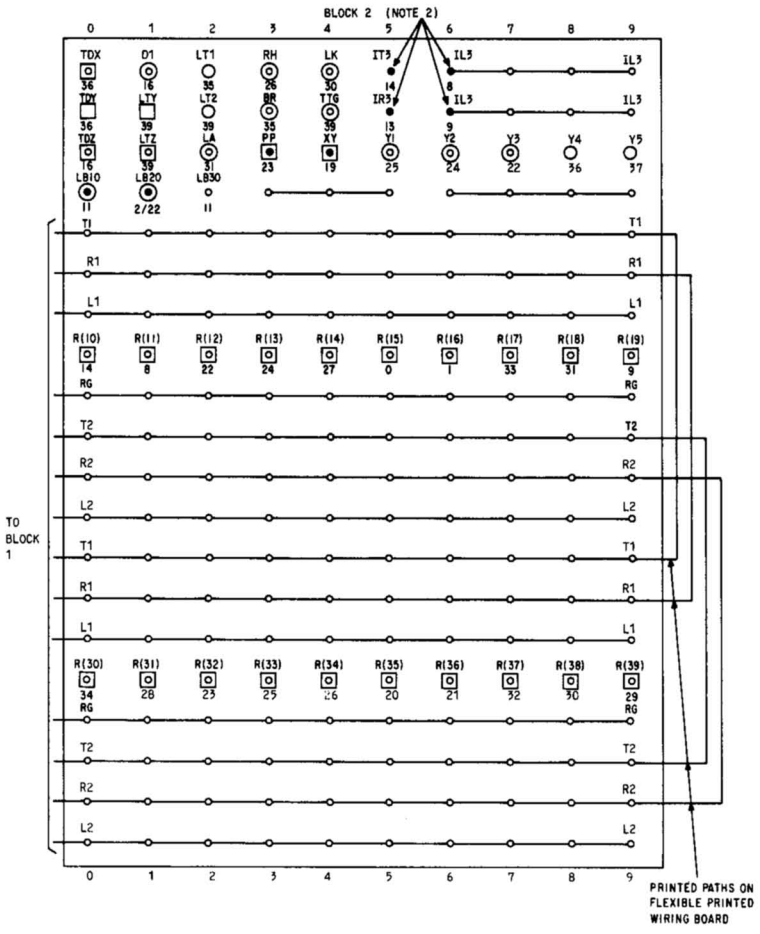

Fig. 17—Connecting Block Terminal Identification (Sheet 2 of 3)

NOTES:

1. NUMBERS UNDER TERMINALS DESIGNATE CONNECTOR PINS (SEE LEGEND). UNNUMBERED TERMINALS APPEAR ON TERMINAL BLOCKS ONLY.

LEGEND	
CONNECTOR	TERMINAL SYMBOL
J1A	○
J1B	◎
J2A	●
J2B	◉
J3A	□
J3B	⊡
J4B	▣
POWER CABLE TERMINALS	*

2. AN AUXILIARY CONNECTING BLOCK IS REQUIRED WHEN THIRD INTERCOM PATH IS USED IN ORDER TO TERMINATE THE IT3, IR3, AND IL3 LEADS.
3. CONNECTOR ARRANGEMENT:

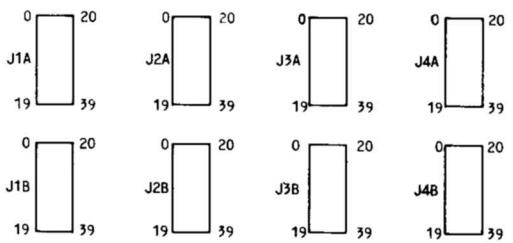

914B CONNECTORS

Fig. 17—Connecting Block Terminal Identification (Sheet 3 of 3)

SERVICE

110A APPARATUS MOUNTING

1A2 KEY TELEPHONE SYSTEM

1. GENERAL

1.01 This section provides identification, installation, and connection information for the 110A apparatus mounting (Fig. 1) used in the 1A2 Key Telephone System (KTS).

1.02 This section is reissued to:

- Add information on snap-in card guide
- Delete ordering information on the guide card 841059280
- Add connection information for the 452A KTU (power failure ringing circuit).

1.03 After January 1, 1980, connection of customer-provided equipment (CPE) or telephone company-provided equipment to the 1A2 KTS requires the use of a 33B voice coupler when providing music-on-hold. Also after January 1, 1980, the 401B, 415B, 471C, and 479C key telephone units (KTUs) must be used when providing their related services. Previously connected or Class C voice couplers and KTUs may be used for maintenance at grandfathered installations for the life of the equipment, provided they are not modified. Class C stock can be used in new installations after January 1, 1980.

1.04 Incoming central office (CO) lines to be installed in compliance with the Federal Communications Commission's (FCC) Registration Program must be routed through a standard network interface. Information on approved interfaces is contained in Sections 463-400-100 through 463-400-150.

1.05 This issue of the section is based on the following drawings:

SD-69812, Issue 1—110A Apparatus Mounting

SD-69513, Issue 15—400D KTU (MD)

SD-69651, Issue 5—400G KTU (MD)

SD-69942, Issue 2—400H KTU

SD-69475, Issue 6—401-Type KTU

SD-69567, Issue 15—407-Type, 420A, 422B, 423A, 424-Type, 425B, and 494A KTUs

SD-69590, Issue 3—413A, 421A, 448A, and 449A KTUs

SD-69559, Issue 10—414A, 415-Type, 416A, 418A, 419A, 461A, and 469A KTUs

SD-69561, Issue 2—417A KTU

SD-69489, Issue 6—428A KTU

SD-69530, Issue 6—429-Type and 430A KTUs

SD-69922, Issue 3—451B, 498A KTU, and 116A1 Circuit Module (CM)

SD-69652, Issue 3A—452A KTU

SD-69917, Issue 1—467A KTU

SD-69921, Issue 3—471-Type and 479-Type KTUs

SD-69931, Issue 1—478B KTU.

NOTICE
Not for use or disclosure outside the
Bell System except under written agreement

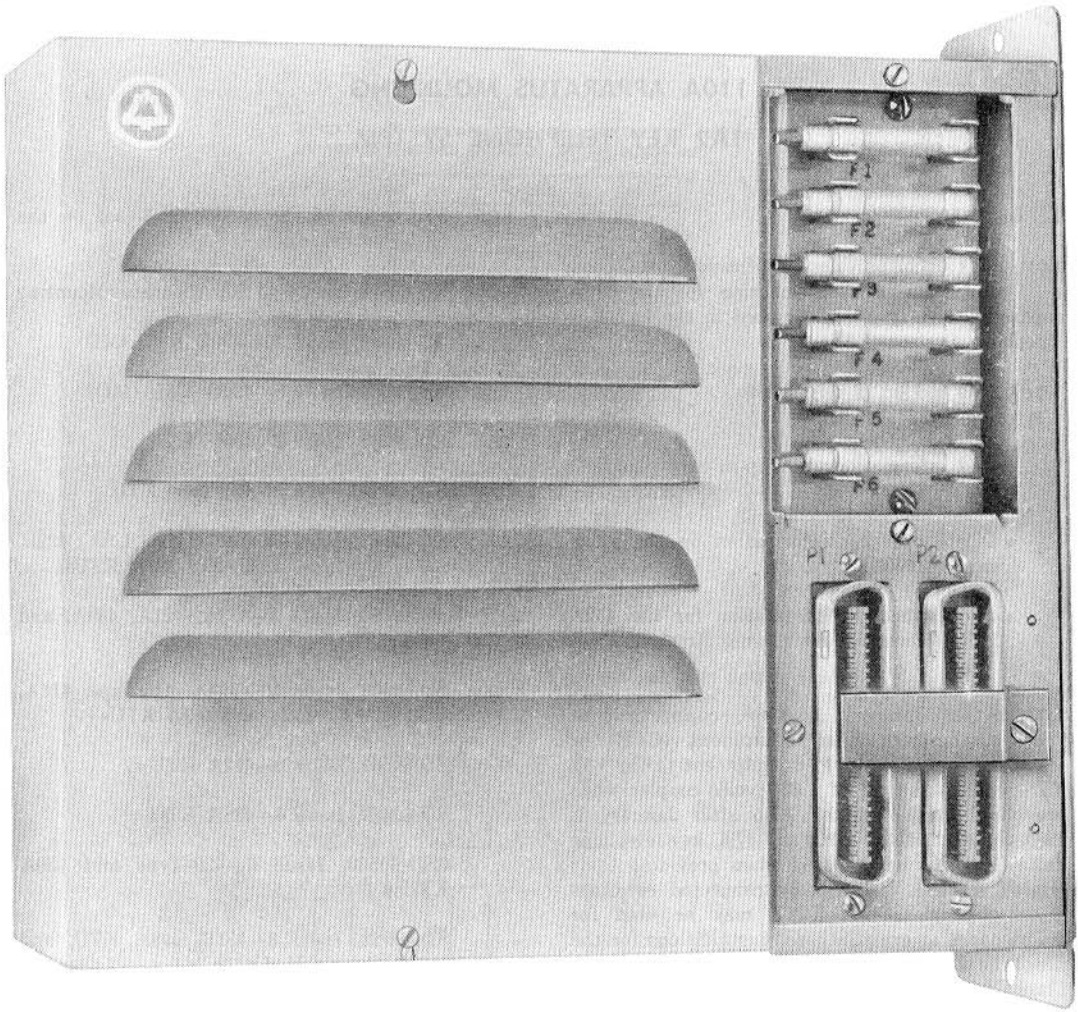

Fig. 1—110A Apparatus Mounting (With Cover)

If this section is to be used with equipment or apparatus reflecting later issues of the drawings, reference should be made to the SDs to determine the extent of the changes and the manner in which the section may be affected.

2. IDENTIFICATION

PURPOSE

2.01 The 110A apparatus mounting provides an alternate mounting facility for 400-series KTUs as add-on circuits to 1A2 KTS.

ORDERING GUIDE

2.02 Order basic unit as follows:

- Mounting, Apparatus, 110A (Fig. 1).

2.03 Replaceable components for the 110A apparatus mounting are to be ordered as follows:

- Fuse, 70B
- Fuse, 70G
- Fuse, 70H
- ▶Guide, Card, Snap-in—furnished with 110A apparatus mounting (comcode 841683501).◀

2.04 The following associated apparatus or equipment is to be ordered separately:

- Block, Connecting, 66B4-25—two required
- Cable, Connector, A25B—two required
- Unit, Telephone, Key—as required, see Table A.

Design Features

2.05 The 110A apparatus mounting (Fig. 2) is designed with the following features:

(a) Equipped with two connectors (A and B) aligned vertically to accommodate one 8-inch KTU or two 4-inch KTUs (Table A).

▶***Note:*** The 110A apparatus mounting is factory equipped with a snap-in guide card (comcode 841683501) which is used to guide the 4-inch KTUs into connectors A and B. When using an 8-inch KTU, the snap-in guide card must be removed by unscrewing the two screws holding it to the connectors and then pulling the guide card from the connectors.◀

(b) Connectors A and B are wired to two KS-16671, L1 plugs (P1 and P2) mounted on the lower right (or rear) of the apparatus mounting.

(c) Louvered cover held in place on its upper and lower edges by screws.

(d) Top, bottom, and center (when required for 4-inch KTUs) card guides hold KTUs in place.

(e) Recessed fuse panel reveals 70-type fuses through a clear plastic cover. To replace fuse, remove cover by loosening two securing screws (Fig. 1 and Table B).

(f) Dedicated leads (BAT, GRD, LF, LW, etc) appear on like-numbered pins of, and are strapped common between, connectors A and B. These leads are brought out of the apparatus mounting as individual conductors via plug P2.

(g) Arranged for wall mounting with choice of positions:

- 2 by 8-1/2 inch surface using upper and lower holes provided on flanges
- 8-1/2 by 9 inch surface using three key holes inside apparatus.

(h) Dimensions: approximately 8-1/2 inches by 9 inches by 2 inches.

(i) A25B connector cables are required to extend the mountings to distributing terminals.

3. INSTALLATION

PLANNING

3.01 Select space for the apparatus mounting and connecting blocks in the same area as the KTS being supplemented and as reasonably close to its power supply as possible.

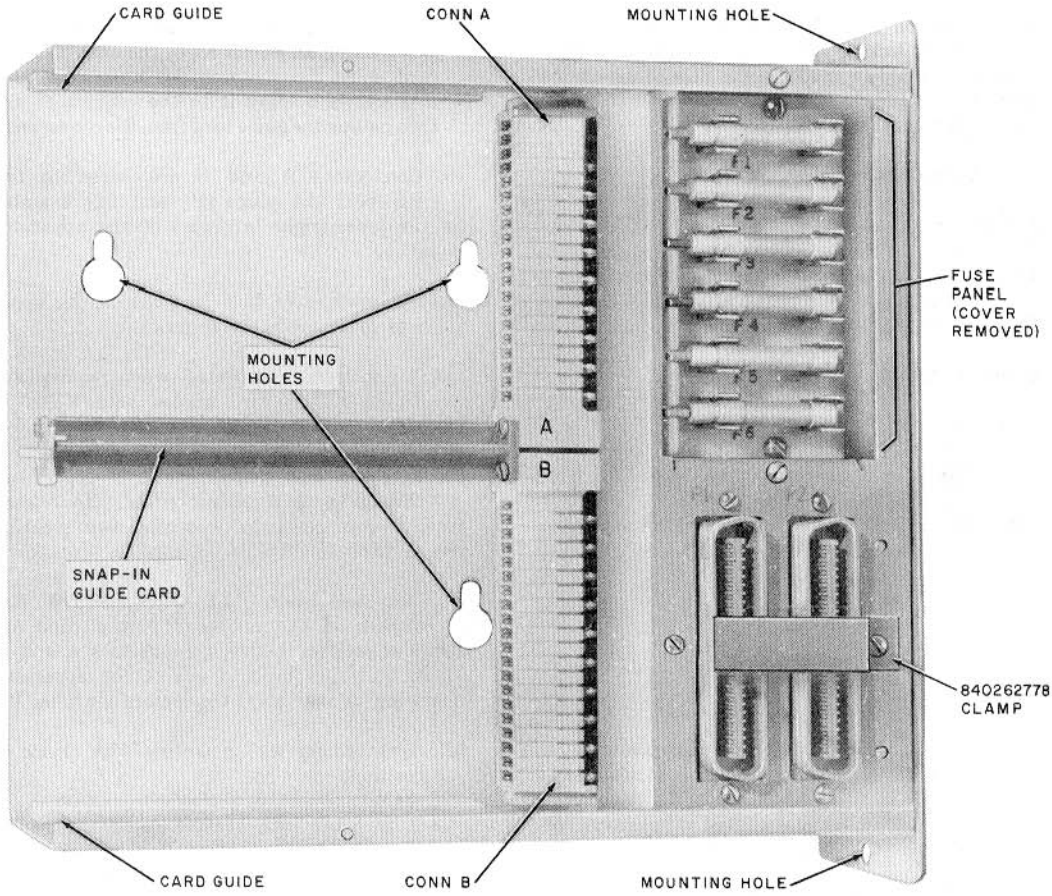

Fig. 2—110A Apparatus Mounting (With Card Guide, Cover Removed)

3.02 Decide which position and mounting holes of the apparatus mounting will be used.

3.03 Verify that fusing requirements for the apparatus mounting can be met (Table B).

INSTALLING

3.04 Mount the 110A apparatus mounting to the wall using appropriate fasteners.

3.05 Install the two 66B4-25 connecting blocks in the terminal field.



In installations where several 110A apparatus mountings are installed, be sure the connecting blocks and apparatus mountings are appropriately identified.

3.06 Connect the A25B connector cables to plugs P1 and P2 and secure them with the connector clamp and screw provided with the mounting.

3.07 Route A25B connector cables to the 66B4-25 connecting blocks and cut down as shown in Fig. 3.

◆ TABLE A ◆

KTU SELECTION AND CONNECTION FIGURE INDEX

KTU	SIZE		CIRCUIT FUNCTION	FIGURE (SEE NOTE)	REMARKS
	IN.	PINS			
400D,G,H	4	18	CO or PBX Line	5	When the 417A, 420A, or 421A KTU is used in the 110A apparatus mounting, the cable run from the apparatus mounting to the connecting block should be as short as possible, preferably not longer than 10 feet to reduce the possibility of noise pickup on unpaired leads.
401-Type	4	18	Manual Intercom	6	
407-Type	8	80	Dial Intercom 10-Code Selector	34, 38	
413A	4	18	Auxiliary Ringup	7	
414A	4	20	Manual Signaling, Ringdown Private Line	8	
415-Type	4	18	Automatic DC Signaling, Private Line	9	
416A	4	20	Station Line	10	
417A	4	20	Add-On Conference	11	WORKING LIMITS: The maximum permissible length of cable run for the lamp feeder pairs (10V±, LW, LF) is determined by the lamp load. For a load of 20 lamps, the run from apparatus mounting to power supply shall be a maximum of 30 feet. For lesser loads, the length of run may be increased proportionately.
418A	4	20	Short Range, DC Signaling, Private Line	12	
419A	8	80	Automatic Signaling, Ringdown Private Line	13	
420A	4	18	Long Line	14	
421A	4	18	Power Failure Transfer	15	
			Audible Signal Suppressor	16	
			Direct Station Selector	17	
			Preset Conference	18, 42	
422B	4	40	Station Busy Selector	19	
423A	4	20	Dial Tone, Busy Tone, and Audible Ringback Tone	20	

♦TABLE A (Contd)♦

KTU SELECTION AND CONNECTION FIGURE INDEX

KTU	SIZE		CIRCUIT FUNCTION	FIGURE (SEE NOTE)	REMARKS
	IN.	PINS			
424-Type	8	80	Dial Intercom, 19-Code Selector	35, 39	
425A	8	80	Flashing Lamp Circuit	40	
428A	4	40	Multiline Exclusion	21	
429-Type	4	40	Supplementary Hold Detector	22	
430A	4	20	Flutter Generator		
448A	4	40	Variable Delay Timer	23	
449A	4	40	Immediate Transfer Control	24	
451-Type	4	40	Music-on-Hold	25	
498A				33	
452A	4	40	Power Failure Ringing	26	
461A	4	20	Manual Signaling, Ringdown Private Line	27	
467A	4	18	Voltage Monitor	28	*Note:* Connection figures are designated for current model KTUs but are applicable for all codes indicated in this table.
469A	4	18	Lamp Extender	29	
471-Type	4	18	Battery Reversal Toll Restriction	30	
478B	8	80	*TOUCH-TONE* Adapter	31	
471-Type	8	20	Rotary Dial Toll Restriction	32	
494A	8	80	*TOUCH-TONE* Selector	36	

TABLE B

FUSING FOR 110A APPARATUS MOUNTING

DESIG	FUNCTION		VOLTAGE	TYPE	SIZE (AMP)
F1	Lamp Wink	LW	10Vac	70B	2
F2	Lamp Steady	10Vac			
F3	Lamp Flash	LF			
F4	Ringing	105Vac	105Vac	70G	1/2
F5	Signal Battery	B Bat.	24Vdc	70H	3/4
F6	Talk Battery	A Bat.			

Note: When apparatus mounting is dedicated to a 407- or 424-type KTU, ***do not*** terminate final eight pairs of P1 connector cable (right connecting block). Tape and store those conductors. This provides terminals necessary for station multiples.

3.08 Terminate dedicated leads from power supply and interrupter, if required, to connecting block 1 (left) (Fig. 4). These connections should be made before installing KTUs in the apparatus mounting. Dedicated leads are those, such as BAT, GRD, LF, LW, etc, which appear on the same-numbered pin of each KTU. The RN leads, previously treated as dedicated leads, must be placed separately when required.

4. CONNECTIONS

4.01 The nondedicated lead connections of the 400-series KTUs that can be installed in the 110A apparatus mounting are shown in Fig. 5 through 33. Each figure is divided into three sections: field connections are shown on the left, row assignments in the center, and connector pin numbers on the right. Pin numbers are shown for reference only and provide a complete picture of the KTU circuitry when the connection drawing of any KTU is compared to the functional schematic.

4.02 Field connections are made for any KTU by determining the connector used (A or B) and the connecting block on which the connector appears. For example (Fig. 5), if a 400-type KTU is installed in connector A, field connections are made to block 1 (left); and if KTU is installed in connector B, connections are made to block 2 (right).

4.03 Power connections and strapping required to furnish a basic dial intercom, using a 407- or 424-type KTU, are shown in Fig. 34 and 35; connections and strapping required when using the 494A KTU for TOUCH-TONE® dialing only are shown in Fig. 36. Dial intercom station connections are covered in Fig. 37. Table C covers connections to optional KTUs.

4.04 Power supply connections and strapping required to furnish a deluxe dial intercom are shown in Fig. 38 and 39 (407- and 424-type KTUs) and Fig. 40 (425B KTU). Dial intercom station connections are shown in Fig. 41 and Table C shows necessary connections to associated and optional KTUs.

CONNECTION INDEX

Fig. 3—Schematic of 110A Apparatus Mounting and Connections of the A25B Connector Cables to 66B4-25 Connecting Blocks

Fig. 4—Dedicated Lead Connections (Interrupter and Power) for 110A Apparatus Mounting

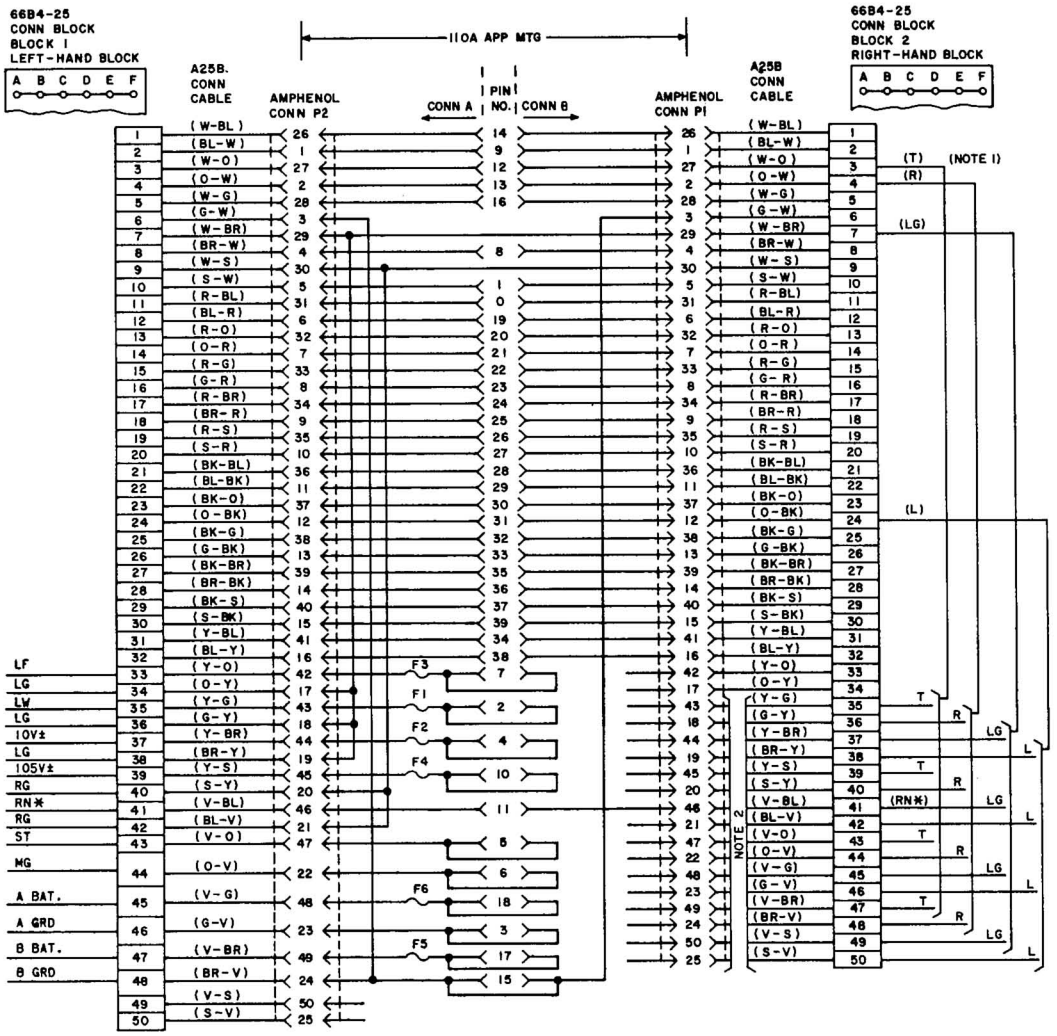

* RN LEADS MUST BE PLACED SEPARATELY WHEN REQUIRED.

NOTES:

1. PROVIDE T, R, LG, L STRAPPING WHEN FURNISHING BASIC DIAL INTERCOM. PROVIDE T, R STRAPPING (ONLY) WHEN FURNISHING DELUXE DIAL INTERCOM AND 110A APP MTG IS DEDICATED TO A 407- OR 424-TYPE KTU.
2. REMOVE (OR DO NOT TERMINATE) THESE LEADS WHEN 110A APP MTG IS DEDICATED TO A 407- OR 424-TYPE KTU. IN THIS CASE THE SPACE IS USED TO PROVIDE FOR STATION MULTIPLES.

Fig. 3—Schematic of 110A Apparatus Mounting and Connections of the A25B Connector Cables to 66B4-25 Connecting Blocks (Sheet 1 of 2)

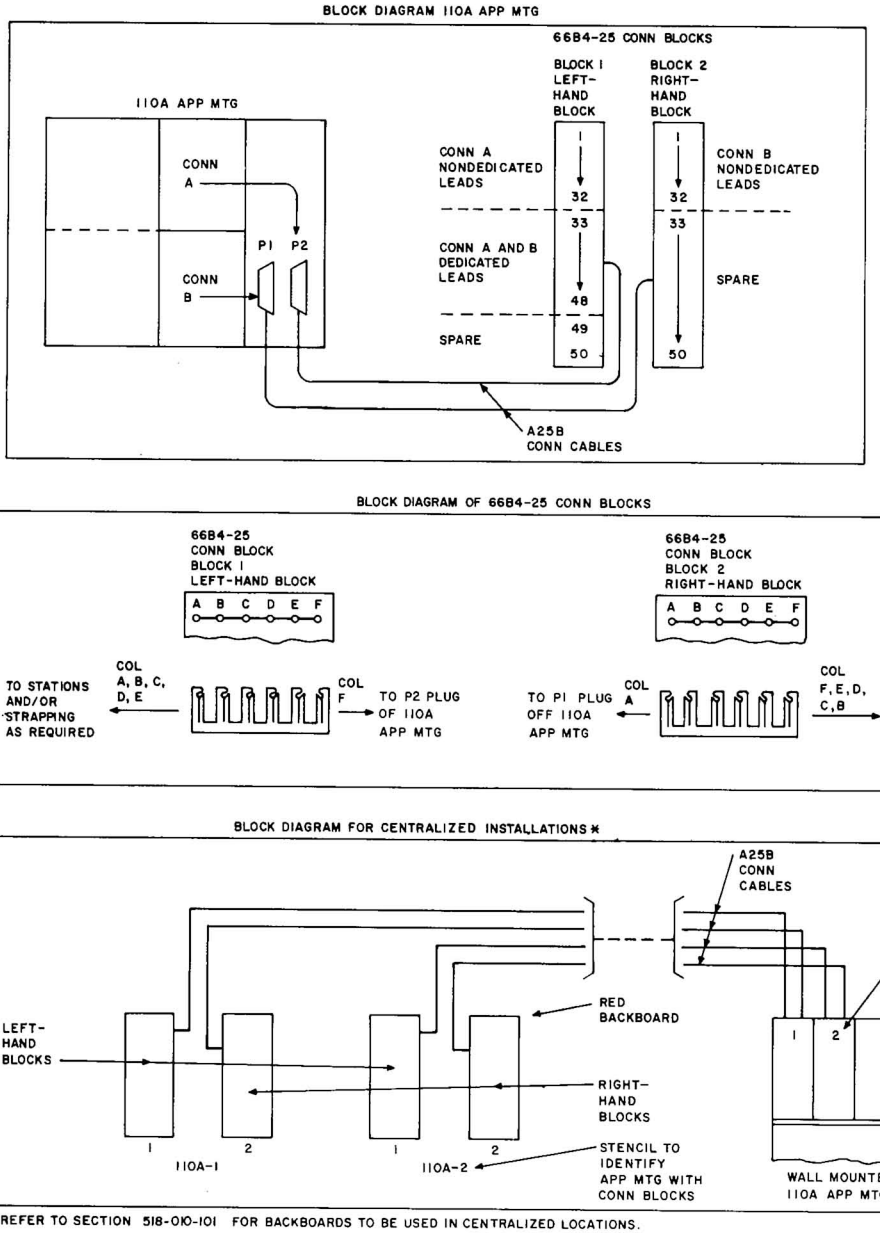

* REFER TO SECTION 518-010-101 FOR BACKBOARDS TO BE USED IN CENTRALIZED LOCATIONS.

Fig. 3—Schematic of 110A Apparatus Mounting and Connections of the A25B Connector Cables to 66B4-25 Connecting Blocks (Sheet 2 of 2)

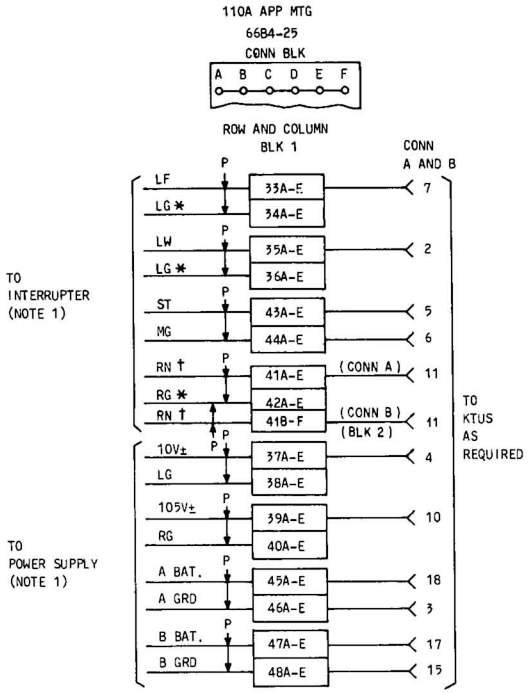

* THESE LEADS USED FOR BALANCING PURPOSES TO PREVENT INDUCED NOISE. THEY MUST BE TERMINATED TO APPROPRIATE GROUND TERMINAL ON PANEL NEAR THE INTERRUPTER.

† RN LEADS ARE TO BE PLACED INDIVIDUALLY AS REQUIRED PER CONNECTOR.

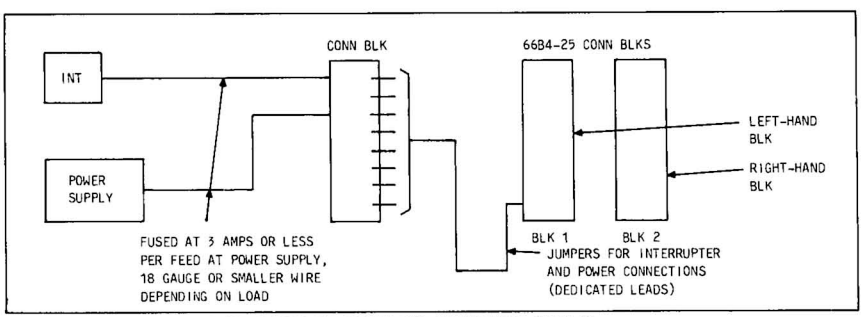

BLOCK DIAGRAM FOR CENTRALIZED INSTALLATION (NOTE 2)

NOTES:

1. CONNECT AS REQUIRED SO AS NOT TO EXCEED THE MAXIMUM LOAD LIMITATIONS OF THE POWER SUPPLY. THESE LEADS MAY BE MULTIPLED FROM BLOCK TO BLOCK PROVIDING THE LIMITATION OF THE POWER SUPPLY IS NOT EXCEEDED.
2. REFER TO SECTION 518-010-101 FOR BACKBOARDS TO BE USED IN CENTRALIZED INSTALLATIONS.

Fig. 4—Dedicated Lead Connections (Interrupter and Power) for 110A Apparatus Mounting

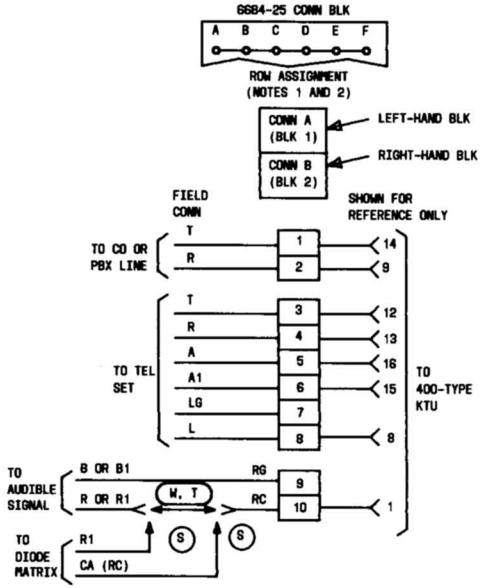

NOTES:

1. SEE BLOCK DIAGRAM COVERING 6684-25 CONNECTING BLOCK IN FIG. 3.
2. TERMINATE DEDICATED LEADS PER FIG. 4.
3. WHEN ZC OPTION IS USED, DUE TO THE DELAYED RELEASE OF THE HOLD BRIDGE, SOME TRANSMISSION LOSS IS ENCOUNTERED FOR APPROXIMATELY ONE SECOND WHEN STATION REENTERS A HELD CALL.
4. OPTION PLUG NOT PROVIDED FOR THIS POSITION: USE PLUG NORMALLY USED TO PROVIDE OPTION R.

* FACTORY PROVIDED OPTIONS

† TO PROVIDE TIME-OUT CYCLES OF RING-UP CIRCUITS FROM 2.5 TO 7.5 SECONDS, INSTALL KS-13490, L1, 1 WATT OR EQUIVALENT RESISTOR BETWEEN TERMINALS 1 AND 3 WITH A STRAP FROM 1 TO 2. TIME-OUT CYCLE AND RESISTOR VALUES ARE AS FOLLOWS:

2.5 SECONDS - 0.13 MEGOHM RESISTOR
3.3 SECONDS - 0.20 MEGOHM RESISTOR
5.0 SECONDS - 0.39 MEGOHM RESISTOR
6.7 SECONDS - 0.75 MEGOHM RESISTOR
7.5 SECONDS - 1.2 MEGOHM RESISTOR

‡ FOR 30-SECOND TIME-OUT CYCLE REMOVE ALL STRAPS FROM TERMINALS 1, 2, AND 3. WHEN THE DURATION OF MACHINE RINGING IS 1 SECOND OR LESS, TIME-OUT SHALL NOT BE REDUCED BELOW 5 SECONDS.

OPTION STRAPPING ON 400D (MD) KTU OPTION BLK

OPT	FEATURE		STRAP TERMINALS
W*	AUDIBLE SIGNALS	INTERRUPTED RING	5 TO 8 *
T		STEADY RING	6 TO 8
S*		COMMON WITH DIODE MATRIX CONTROL	5 TO 8 *
Y*	VISUAL HOLD CIRCUIT	LAMP WINK	7 TO 10 *
X		LAMP STEADY	7 TO 9
Z †	TIMEOUT	TIME SHORT (10 SECONDS)	1 TO 2 †
‡		DELAY LONG	‡
ZC (NOTE 3)	RELEASE OF HOLDING BRIDGE FROM CO OR PBX LINE CURRENT OPENS GREATER THAN	500 MILLISECONDS WHEN ASSOCIATED WITH NO. 1 ESS HAVING RESWITCH CAPABILITY	2 TO 3 USING 601A (5 UF) CAPACITOR OR EQUIVALENT
ZD		100 MILLISECONDS WHEN ASSOCIATED WITH 800A PBX AND/OR NO. 5 X-BAR CENTREX NOT HAVING AUTOMATIC PERMANENT SIGNAL RELEASE	2 TO 3 USING 575A (1 UF) CAPACITOR OR EQUIVALENT
ZJ		50 MILLISECONDS WHEN ASSOCIATED WITH NO. 5 X-BAR CENTREX HAVING AUTOMATIC PERMANENT SIGNAL RELEASE	2 TO 3 USING 575B (0.5 UF) CAPACITOR OR EQUIVALENT

400D (MD) KTU

Fig. 5—Nondedicated Lead Connections for 400D (MD), 400G (MD), and 400H KTUs (CO/PBX) in 110A Apparatus Mounting (Sheet 1 of 2)

Nondedicated Lead Connections for 400-Series KTUs Used in 110A Apparatus Mounting

Fig. 5—400D (MD), 400G (MD), and 400H KTUs (CO/PBX)

Fig. 6—401-Type KTU (Manual Intercom)

Fig. 7—413A KTU (Auxiliary Ringup)

Fig. 8—414A KTU (Manual Signaling, Ringdown Private Line)

OPT	FEATURE				OPTION PLUG TO TERMINALS
M	TIMEOUT	TIME DELAY	LONG	APPROXIMATELY 20 SECONDS	B1 - B2
Z*			SHORT	APPROXIMATELY 6 SECONDS (±1.5 SEC)	B2 - B3 *
Y*	VISUAL HOLD CIRCUIT	LAMP WINK			A1 - A2 *
X		LAMP STEADY			A2 - A3
W*	AUDIBLE SIGNAL	INTERRUPTED			C2 - C3 *
T		STEADY			C3 - C4
S		COMMON	DIODE MATRIX CONTROL		
V			RELAY CONTROL		C1 - C3
R	DELAYED HOLD RELEASE	RELEASE OF HOLDING BRIDGE FROM CO OR PBX BY LINE CURRENT OPENS		MINIMUM OF 25 MS	E2 - E3
K*				600 MS	E1 - E2 *
N	CONNECTS TO 50A CUSTOMER PREMISES SYSTEM (NOTE 4)				D1 - D2

400G (MD) KTU

TOP VIEW OF OPTION BLOCK WITH HANDLE TOWARD USER. OPTION SYMBOLS SHOWN CONNECTED TO TERMINALS INDICATE FACTORY PROVIDED OPTIONS.

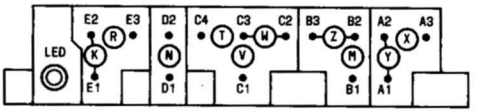

OPT	FEATURE			OPTION PLUG TO TERMINALS
T*	CO OR PBX LINE CIRCUIT			(J1 - J3) *
W*	AUDIBLE SIGNAL	INTERRUPTED		A2 - A3 *
X		COMMON	DIODE MATRIX CONTROL	
V			RELAY CONTROL	A1 - A3
S*	HOLD CIRCUIT RELEASE	LONG	ESS #1, ESS #2, DIMENSION 812, 770 PBX	B1 - B2 *
R		SHORT	ALL OTHERS	B2 - B3

400H KTU

TOP VIEW OF OPTION BLOCK WITH HANDLE TOWARD USER. OPTION SYMBOLS SHOWN CONNECTED TO TERMINALS INDICATE FACTORY PROVIDED OPTIONS.

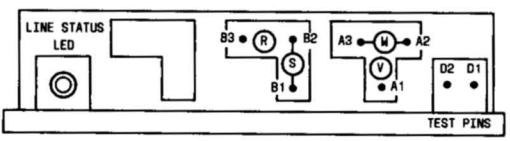

Fig. 5—Nondedicated Lead Connections for 400D (MD), 400G (MD), and 400H KTUs (CO/PBX) in 110A Apparatus Mounting (Sheet 2 of 2)

Fig. 9—415-Type KTU (Automatic, DC Signaling Private Line)

Fig. 10—416A KTU (Station Line)

Fig. 11—417A KTU (Add-On Conference)

Fig. 12—418A KTU (Short Range, DC Signaling Private Line)

Fig. 13—419A KTU (Automatic Signaling, Ringdown Private Line)

Fig. 14—420A KTU (Long Line)

Fig. 15—421A KTU (Power Failure Transfer)

Fig. 16—421A KTU (Wired for Audible Signal Suppressor)

Fig. 17—421A KTU (Wired for DSS Feature)

Fig. 18—421A KTU (Wired for Preset Conference)

Fig. 19—422B KTU (Station Busy Selector)

Fig. 20—423A KTU (Dial Tone, Busy Tone, and Audible Ringback Tone)

Fig. 21—428A KTU (Multiline Exclusion)

Fig. 22—429-Type KTU (Supplementary Hold Detector) and 430A KTU (Flutter Generator)

Fig. 23—448A KTU (Variable Delay Timer)

Fig. 24—449A KTU (Immediate Transfer Control)

Fig. 25—451B KTU (Music-On-Hold)

Fig. 26—452A KTU (Power Failure Ringing)

Fig. 27—461A KTU (Manual Signaling, Ringdown Private Line)

Fig. 28—467A KTU (Voltage Monitor)

Fig. 29—469A KTU (Lamp Extender)

Fig. 30—471-Type KTU (Battery Reversal Toll Restriction)

Fig. 31—478B KTU (TOUCH-TONE Adapter)

Fig. 32—479-Type KTU (Rotary Dial Toll Restriction)

Fig. 33—498A KTU and 116A1 CM (Music-On-Hold)

Dial Intercoms

Table C—Basic and Deluxe Dial Intercom Connections—407- and 424-Type KTUs to Associated and Optional KTUs

—Basic Dial Intercom

Fig. 34—Strapping and Power Supply Connections for 407-Type KTU

Fig. 35—Strapping and Power Supply Connections for 424-Type KTU

Fig. 36—With TOUCH-TONE Dialing, Strapping and Power Supply Connections for 494A KTU

Fig. 37—Station Connections

—Deluxe Dial Intercom

Fig. 38—Strapping and Power Supply Connections for 407-Type KTU

Fig. 39—Strapping and Power Supply Connections for 424-Type KTU

Fig. 40—Strapping and Power Supply Connections for 425B KTU

Fig. 41—Station Connections

Fig. 42—Nondedicated Lead Connections for Preset Conference Circuit of a Deluxe Dial Intercom Line (421A and 413A KTUs) in 110A Apparatus Mounting

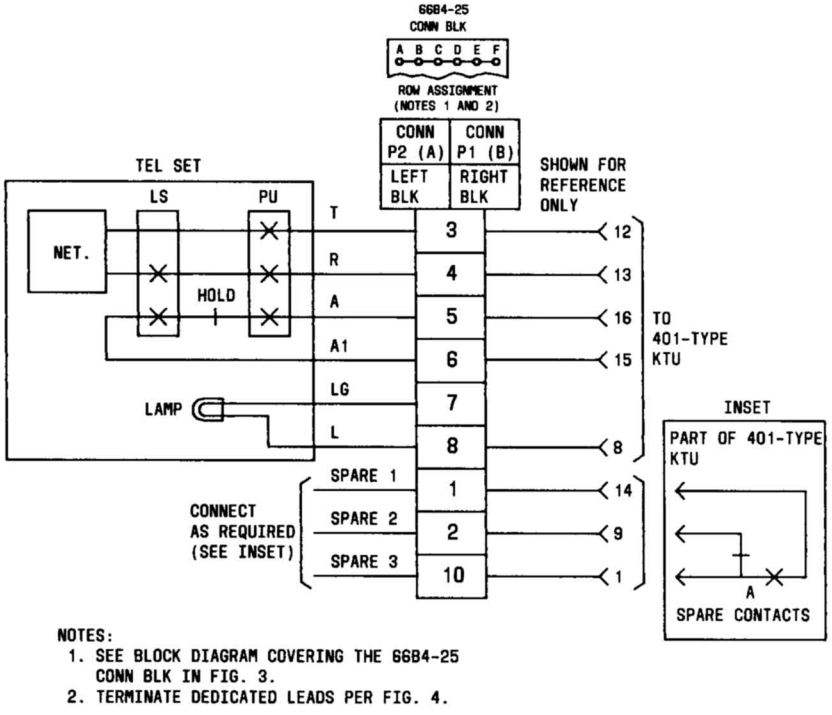

NOTES:
1. SEE BLOCK DIAGRAM COVERING THE 6684-25 CONN BLK IN FIG. 3.
2. TERMINATE DEDICATED LEADS PER FIG. 4.

Fig. 6—Nondedicated Lead Connections for 401-Type KTU (Manual Intercom Line) in 110A Apparatus Mounting

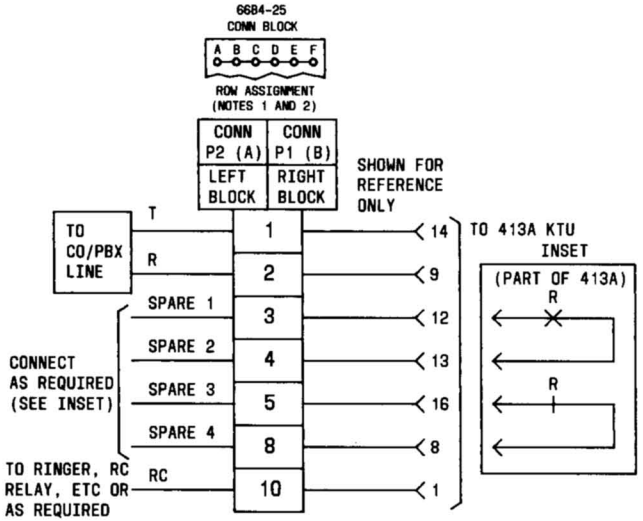

NOTES:
1. SEE BLOCK DIAGRAM COVERING THE 66B4-25 CONN BLK IN FIG. 3.
2. TERMINATE DEDICATED LEADS PER FIG. 4.

OPTION STRAPPING ON 413A KTU OPTION BLK

OPTION	FEATURES		STRAP TERMINALS
X	AUDIBLE SIGNALS	STEADY RING	9 TO 10
Z		INTERRUPTED RING	8 TO 10

Fig. 7—Nondedicated Lead Connections for 413A KTU (Auxiliary Ringup) in 110A Apparatus Mounting

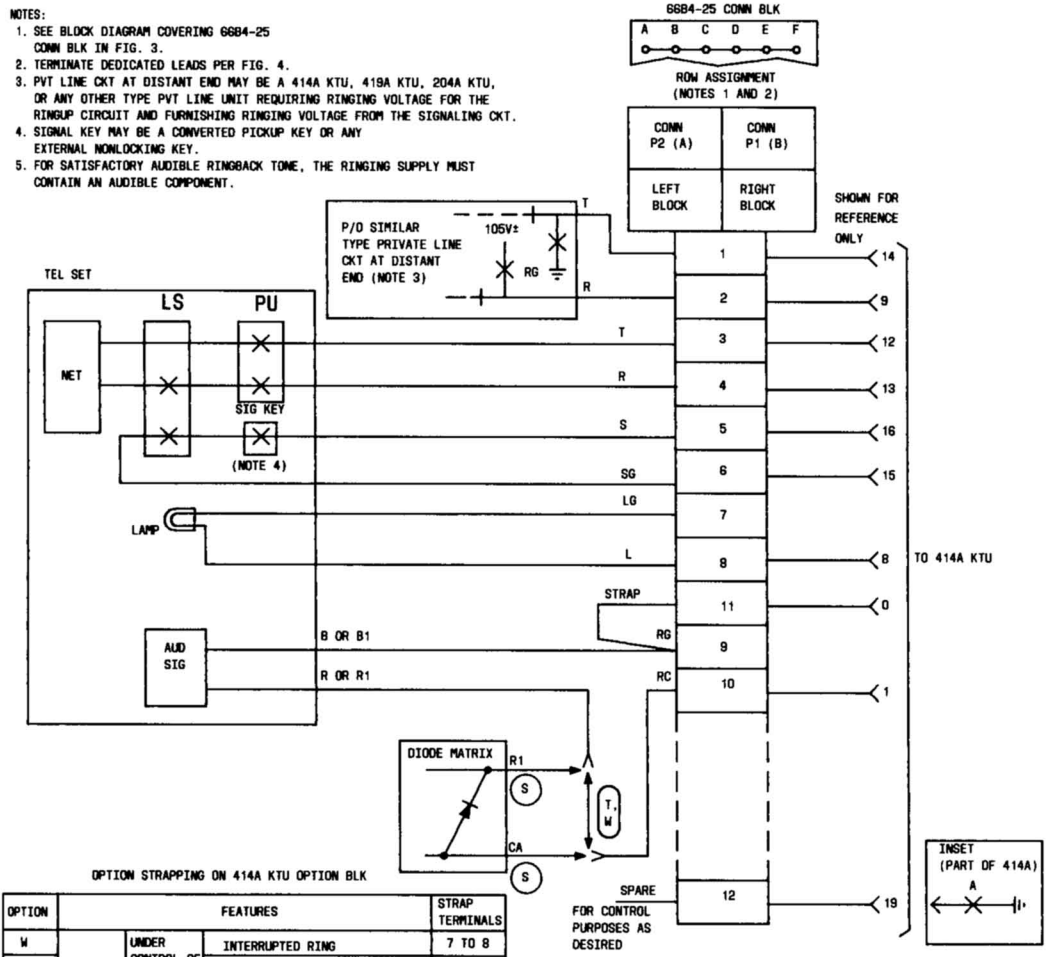

OPTION STRAPPING ON 414A KTU OPTION BLK

OPTION	FEATURES			STRAP TERMINALS
W	AUDIBLE SIGNALS	UNDER CONTROL OF TIME-OUT CIRCUIT (B RELAY)	INTERRUPTED RING	7 TO 8
T			STEADY RING	6 TO 7
S			COMMON WITH DIODE MATRIX CONTROL	7 TO 8
R		UNDER CONTROL OF R RELAY	STEADY RING	4 TO 6
N			COMMON WITH DIODE MATRIX CONTROL	
X	TIME-OUT	10 SECONDS		1 TO 2
Z		16 SECONDS		2 TO 3
WITHOUT X OR Z		23 SECONDS		REMOVE X OR Z STRAPS
M	AUDIBLE RINGBACK TONE (NOTE 5)			9 TO 10

Fig. 8—Nondedicated Lead Connections for 414A KTU (Manual Signaling, Ringdown Private Line) in 110A Apparatus Mounting

NOTES:
1. SEE BLOCK DIAGRAM COVERING 6684-25 CONN BLK IN FIG. 3.
2. TERMINATE DEDICATED LEADS PER FIG. 4.
3. PVT LINE CKT AT DISTANT END MAY BE A 415-TYPE KTU, 203A KTU, OR ANY OTHER TYPE PVT LINE UNIT REQUIRING DC VOLTAGE FOR THE RINGUP CIRCUIT AND FURNISHING DC VOLTAGE FROM THE SIGNALING CKT.

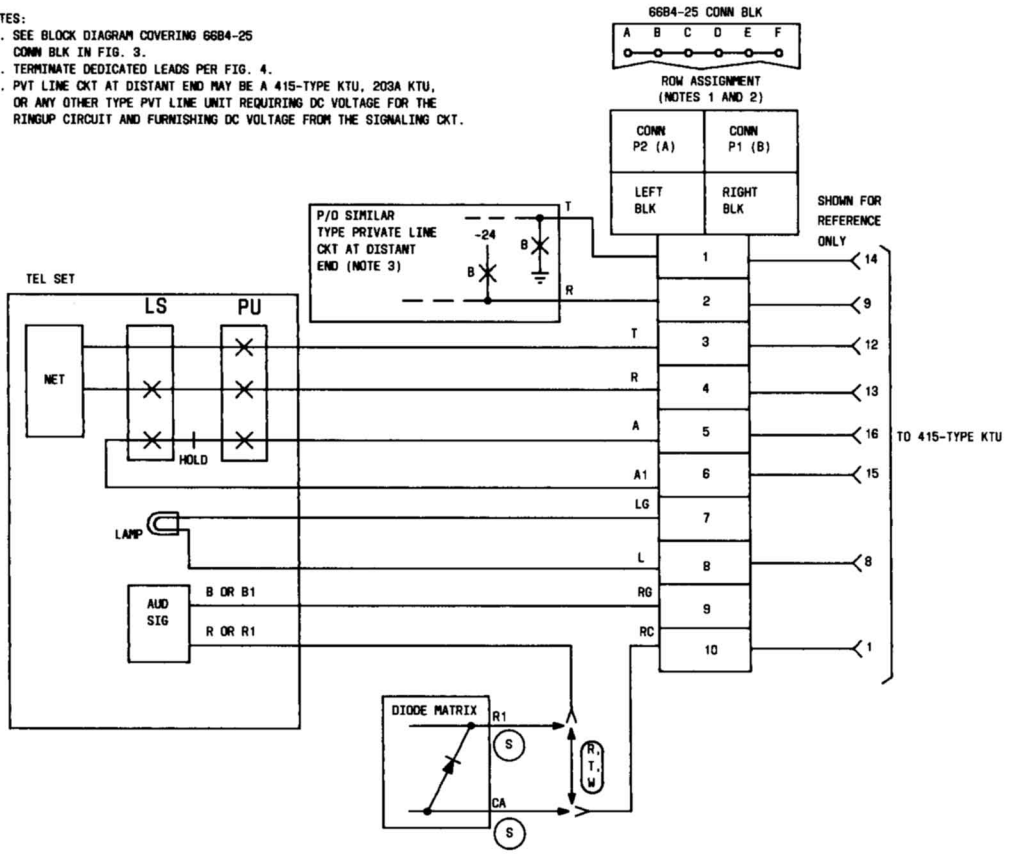

OPTION STRAPPING ON 415-TYPE KTU OPTION BLK*

OPTION	FEATURES		STRAP TERMINALS
W	AUDIBLE SIGNALS	INTERRUPTED RING	4 TO 6
T		STEADY RING	5 TO 6
S		COMMON WITH DIODE MATRIX CONTROL	4 TO 6
M	AUDIBLE RINGBACK TONE		1 TO 2
Y	VISUAL HOLD SIGNAL		7 TO 8

* FOR IDLE LINE TERMINATION, CONNECT A KS-13490, L1 910-OHM RESISTOR IN SERIES WITH A 542F, 2 UF CAPACITOR ACROSS TERMINALS 9 AND 10. ORDER COMPONENTS LOCALLY AND INSTALL.

Fig. 9—Nondedicated Lead Connections for 415-Type KTU (Automatic, DC Signaling Private Line) in 110A Apparatus Mounting

NOTES:
1. SEE BLOCK DIAGRAM COVERING 66B4-25 CONN BLK IN FIG. 3.
2. TERMINATE DEDICATED LEADS PER FIG. 4.
3. SIGNAL KEY MAY BE A CONVERTED PICKUP KEY OR ANY EXTERNAL NONLOCKING KEY.

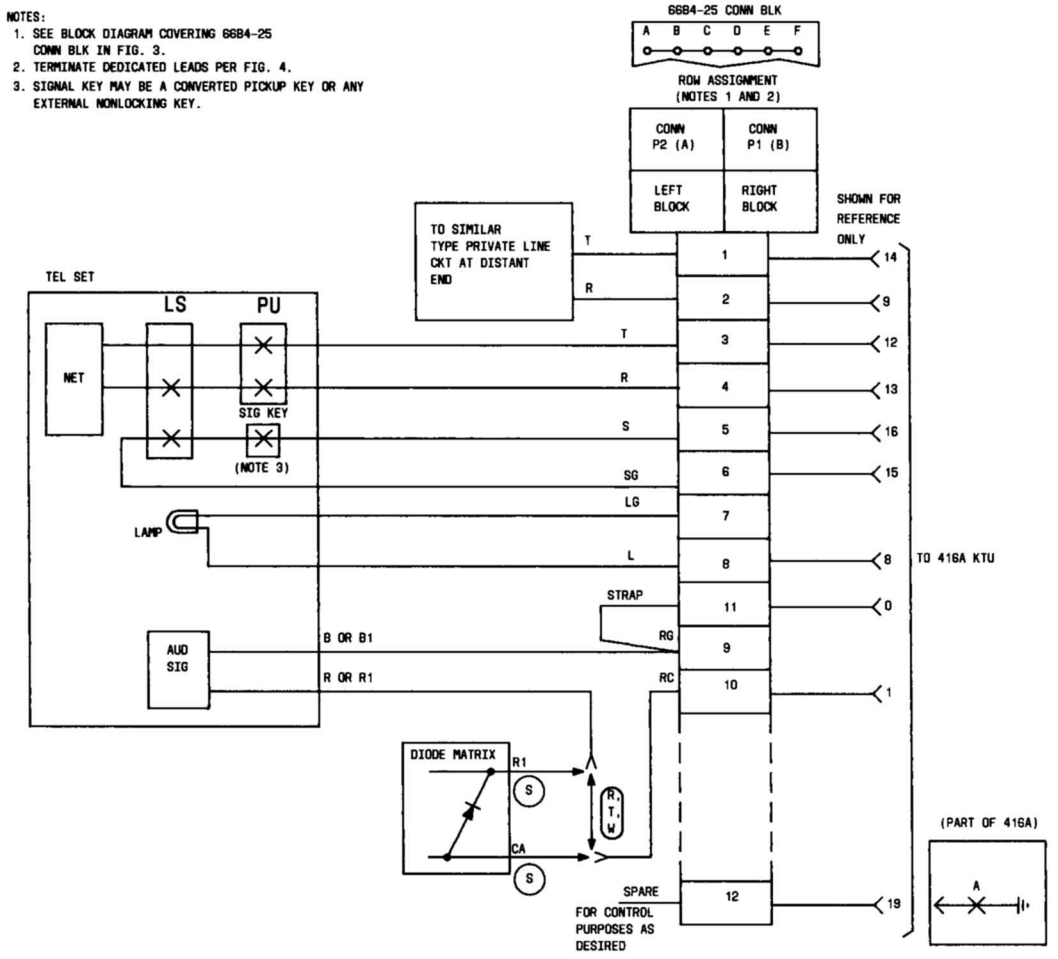

OPTION STRAPPING ON 416A KTU OPTION BLK

OPTION	FEATURES		STRAP TERMINALS
W	AUDIBLE SIGNALS	INTERRUPTED RING	5 TO 8
T		STEADY RING	7 TO 8
S		COMMON WITH DIODE MATRIX CONTROL	5 TO 8
M	AUDIBLE RINGBACK TONE		9 TO 10

Fig. 10—Nondedicated Lead Connections for 416A KTU (Station Line) in 110A Apparatus Mounting

NOTES:

1. SEE BLOCK DIAGRAM COVERING 66B4-25 CONN BLK IN FIG. 3.
2. TERMINATE DEDICATED LEADS PER FIG. 4.
3. ASSOCIATED LAMP AND RINGING CKTS FROM 400-TYPE KTU AND DIAL INTERCOM LINE CONNECT DIRECTLY TO TELEPHONE SETS.
4. STATION LEADS FROM THE TEL SET FOR THE 1ST LINE MUST ALSO BE TERMINATED TO THE STA SIDE OF THE ASSIGNED 400-TYPE KTU.
5. REMOVE AND INSULATE EXCLUSION KEY LEADS FROM IT AND IR IN THE TEL SET IF SO CONNECTED.
6. SIGNAL KEY MAY BE A CONVERTED PICKUP KEY OR AN EXTERNAL NONLOCKING KEY.
7. A DIODE MUST BE INSTALLED IN THE "A" LEAD OF THE TEL SET WHEN Z OPTION IS PROVIDED. FOR METHOD OF CONNECTION USE STATION BUSY LAMP OPTION AS SHOWN IN CONNECTION SECTION OF TYPE SET USED.
8. LAMP INDICATING CONFERENCE CKT IS ACTIVATED.

OPTION STRAPPING ON 417A KTU OPTION BLK

OPTION	FEATURES		STRAP TERMINALS
X	ONE STATION	CONTROLLED BY NONLOCKING KEY	6 TO 10
W*	TWO STATIONS		4 TO 6, 8 TO 10
Y	CONTROLLED BY EXCLUSION KEY		3 TO 5
Z	CONTROLLED BY NONLOCKING KEY		1 TO 2

* - INSTALL KS-21765, L1 DIODES OR EQUIVALENT (PROCURE LOCALLY) BETWEEN TERMINALS AS SHOWN.

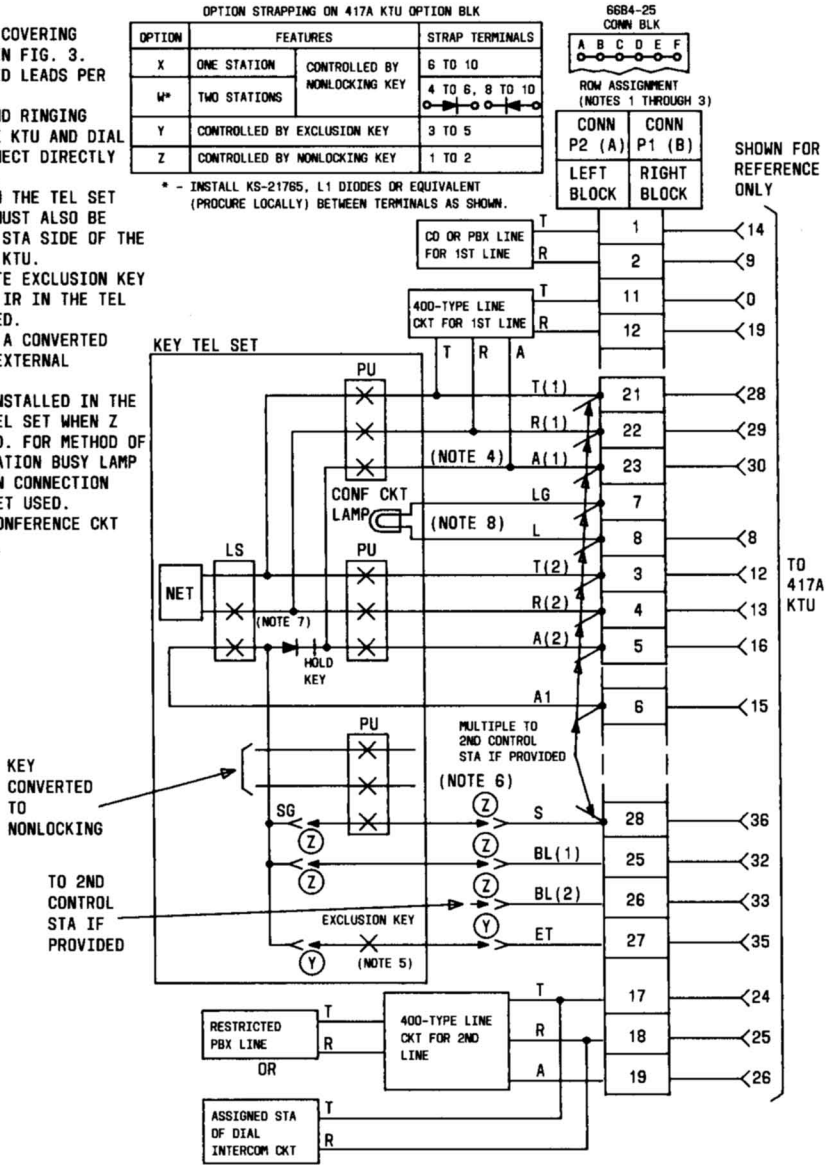

Fig. 11—Nondedicated Lead Connections for 417A KTU (Add-On Conference) in 110A Apparatus Mounting

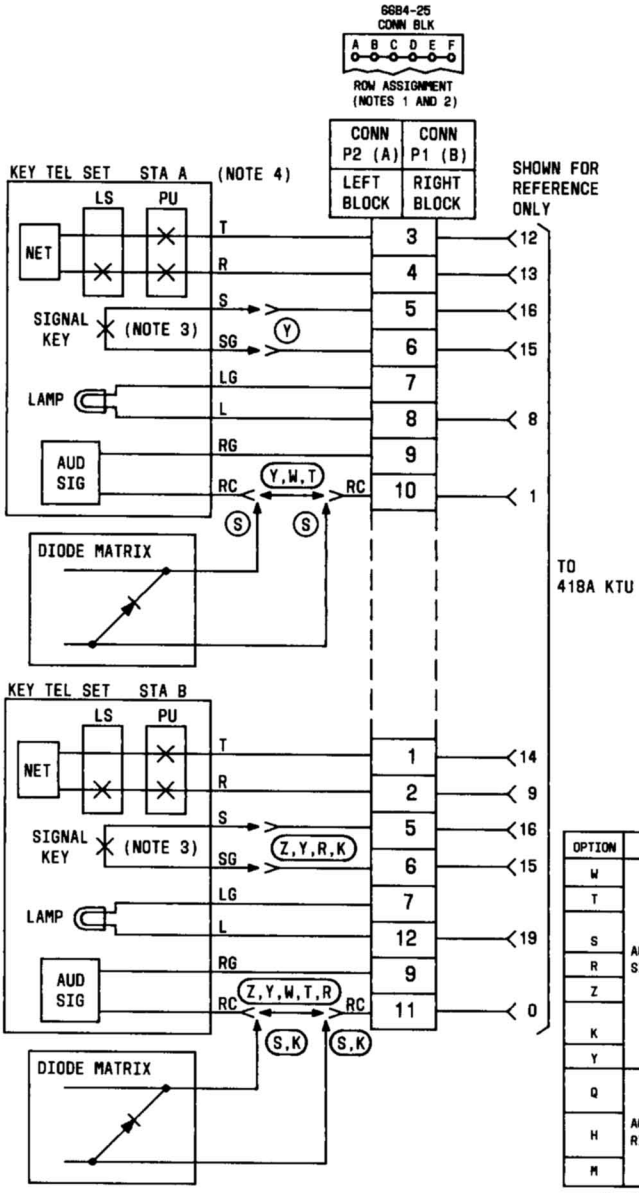

NOTES:

1. SEE BLOCK DIAGRAM COVERING 66B4-25 CONN BLK IN FIG. 3.
2. TERMINATE DEDICATED LEADS PER FIG. 4.
3. SIGNAL KEY MAY BE A CONVERTED PICKUP KEY OR AN EXTERNAL NONLOCKING KEY.
4. STATION "A" IS ALWAYS ASSIGNED AS THE AUTOMATIC SIGNALING STATION WHENEVER THE ONE-WAY AUTOMATIC, ONE-WAY MANUAL SIGNALING OPTION IS USED.
5. THESE OPTIONS APPLY TO THE SIGNAL KEY AND AUDIBLE SIGNAL AT STA "B" ONLY. THE AUDIBLE SIGNAL AT STA "A" IS UNDER CONTROL OF THE SIGNAL KEY OF STA "B". THE AUDIBLE SIGNAL AT STA "A" MAY BE PART OF A COMMON AUDIBLE ARRANGEMENT PROVIDED THE DIODE MATRIX IS USED FOR CONTROL.
6. THE AUDIBLE SIGNALS AT STAS "A" AND "B" MAY BE PART OF A COMMON AUDIBLE ARRANGEMENT PROVIDED THE DIODE MATRIX IS USED FOR CONTROL.

OPTION STRAPPING ON 418A KTU OPTION BLK

OPTION	FEATURES			STRAP TERMINALS
W	AUDIBLE SIGNALS	TWO-WAY AUTOMATIC	INTERRUPTED RING	2 TO 3 TO 4 *
T			STEADY RING	1 TO 2 TO 4 *
S			COMMON WITH DIODE MATRIX CONTROL	2 TO 3 TO 4 *
R		ONE-WAY AUTOMATIC, ONE-WAY MANUAL (NOTE 5)	INTERRUPTED RING	3 TO 4
Z			STEADY RING	1 TO 4
K			COMMON WITH DIODE MATRIX CONTROL	3 TO 4
Y		TWO-WAY MANUAL (NOTE 6)		
Q	AUDIBLE RING-BACK	TWO-WAY AUTOMATIC		9 TO 10, 5 TO 7 TO 8 *
H		ONE-WAY AUTOMATIC, ONE-WAY MANUAL		5 TO 7, 9 TO 10
M		TWO-WAY MANUAL		9 TO 10

* - USE CONTINUOUS METHOD OF STRAPPING

Fig. 12—Nondedicated Lead Connections for 418A KTU (Short Range, DC Signaling Private Line) in 110A Apparatus Mounting

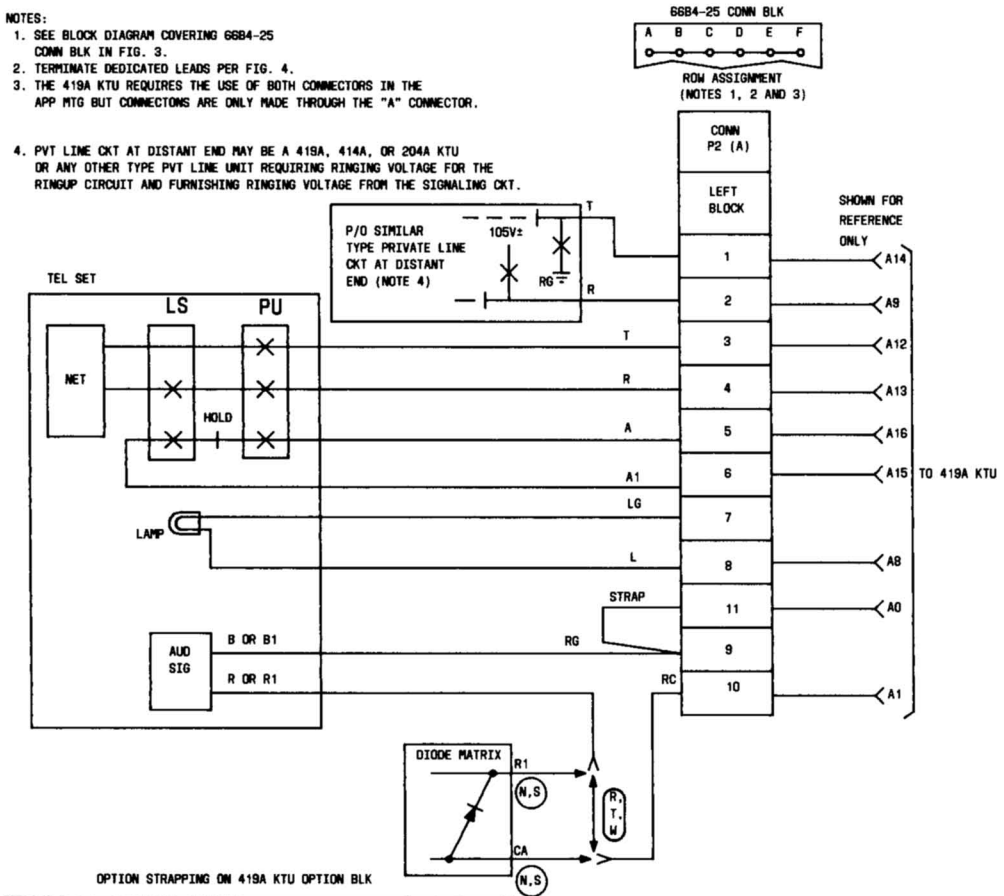

OPTION STRAPPING ON 419A KTU OPTION BLK

OPTION	FEATURES			STRAP TERMINALS
W	AUDIBLE SIGNALS	UNDER CONTROL OF TIME-OUT CIRCUIT (B RELAY)	INTERRUPTED RING	6 TO 8
T			STEADY RING	5 TO 6
S			COMMON WITH DIODE MATRIX CONTROL	6 TO 8
R		UNDER CONTROL OF R RELAY	STEADY RING	3 TO 5
N			COMMON WITH DIODE MATRIX CONTROL	
X	TIME-OUT	6 SECONDS		9 TO 10
Z		17 SECONDS		7 TO 10
WITHOUT X OR Z		25 SECONDS		REMOVE X OR Z STRAPS
M	AUDIBLE RINGBACK TONE			1 TO 2

Fig. 13—Nondedicated Lead Connections for 419A KTU (Automatic Signaling, Ringdown Private Line) in 110A Apparatus Mounting

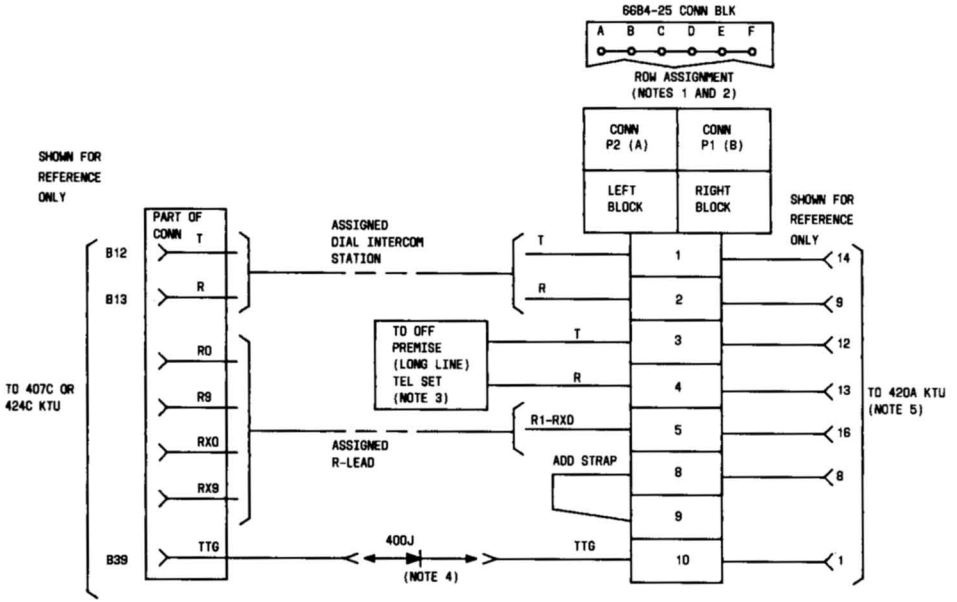

NOTES:

1. SEE BLOCK DIAGRAM COVERING 6684-25 CONN BLK IN FIG. 3.
2. TERMINATE DEDICATED LEADS PER FIG. 4
3. MAXIMUM STATION CONDUCTOR LOOP IS 500 OHMS. OFF-PREMISE (LONG LINE) TELEPHONE SET MAY BE EQUIPPED WITH A "TOUCH-TONE" DIAL PROVIDED THE INTERCOM CIRCUIT IS SO EQUIPPED.
4. PROVIDE A 400J DIODE FOR EACH 420A KTU INSTALLED WHEN THE INTERCOM IS EQUIPPED WITH THE "TOUCH-TONE" ADAPTER (440A OR 478B KTU)
5. THE CABLE RUN FROM THE APPARATUS MOUNTING TO THE CONNECTING BLOCK SHOULD BE AS SHORT AS POSSIBLE, PREFERABLY LESS THAN 10 FT.

OPTION STRAPPING ON 420A KTU OPTION BLK

OPTION	FEATURE		STRAP TERMINALS
J,X	AUDIBLE SIGNALS	AC BUZZER, 18V± OR 10V±	1 TO 4, 7 TO 8
K,X		DC BUZZER, 24V DC	
M,X,R		RINGER, 105V± STEADY	2 TO 4, 7 TO 8
X		INTERRUPTED	
R		INTERRUPTED WITH STATION BUSY	

Fig. 14—Nondedicated Lead Connections for 420A KTU (Long Line) in 110A Apparatus Mounting

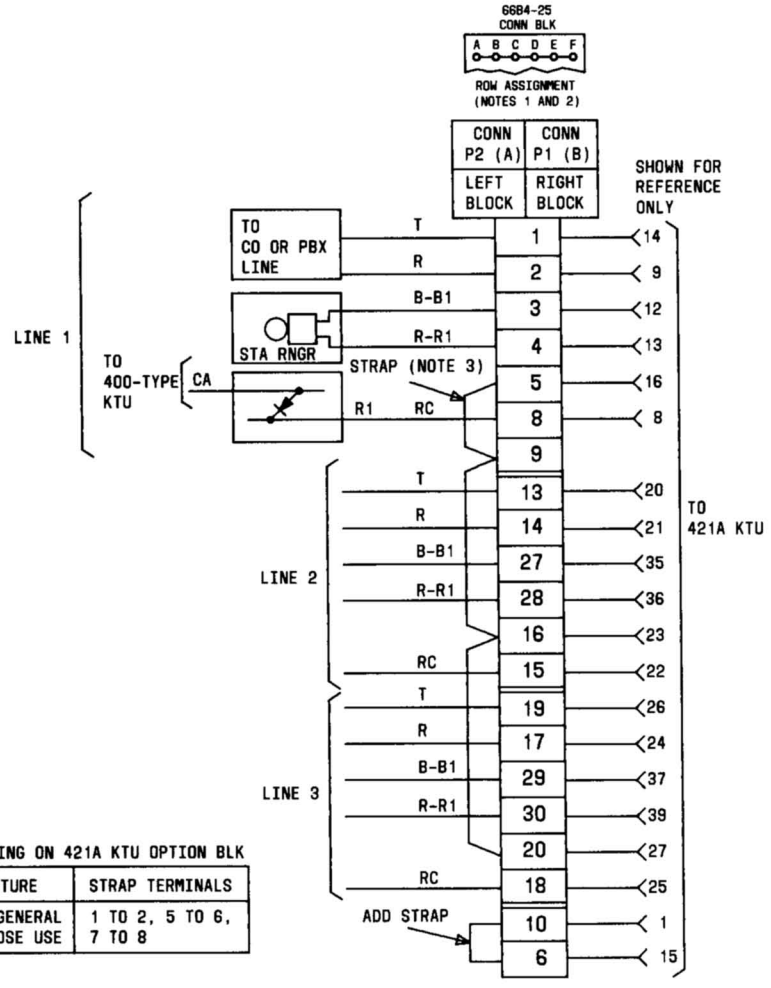

OPTION STRAPPING ON 421A KTU OPTION BLK

OPTION	FEATURE	STRAP TERMINALS
W	FOR GENERAL PURPOSE USE	1 TO 2, 5 TO 6, 7 TO 8

NOTES:
1. SEE BLOCK DIAGRAM COVERING 6684-25 CONN BLK IN FIG. 3.
2. TERMINATE DEDICATED LEADS PER FIG. 4.
3. ADD STRAPS ACCORDING TO NUMBER OF LINES SERVED.

Fig. 15—Nondedicated Lead Connections for 421A KTU (Power Failure Transfer) in 110A Apparatus Mounting

NOTES:
1. SEE BLOCK DIAGRAM COVERING 66B4-25 CONN BLK IN FIG. 3.
2. TERMINATE DEDICATED LEADS PER FIG. 4.
3. OPTION (W) REQUIRED WHEN 421A KTU IS USED FOR AUDIBLE SIGNAL SUPPRESSION.
4. 400-TYPE KTU WIRED FOR COMMON AUDIBLE WITH DIODE MATRIX OPTION.
5. REFER TO SECTION PERTAINING TO TELEPHONE SET USED.

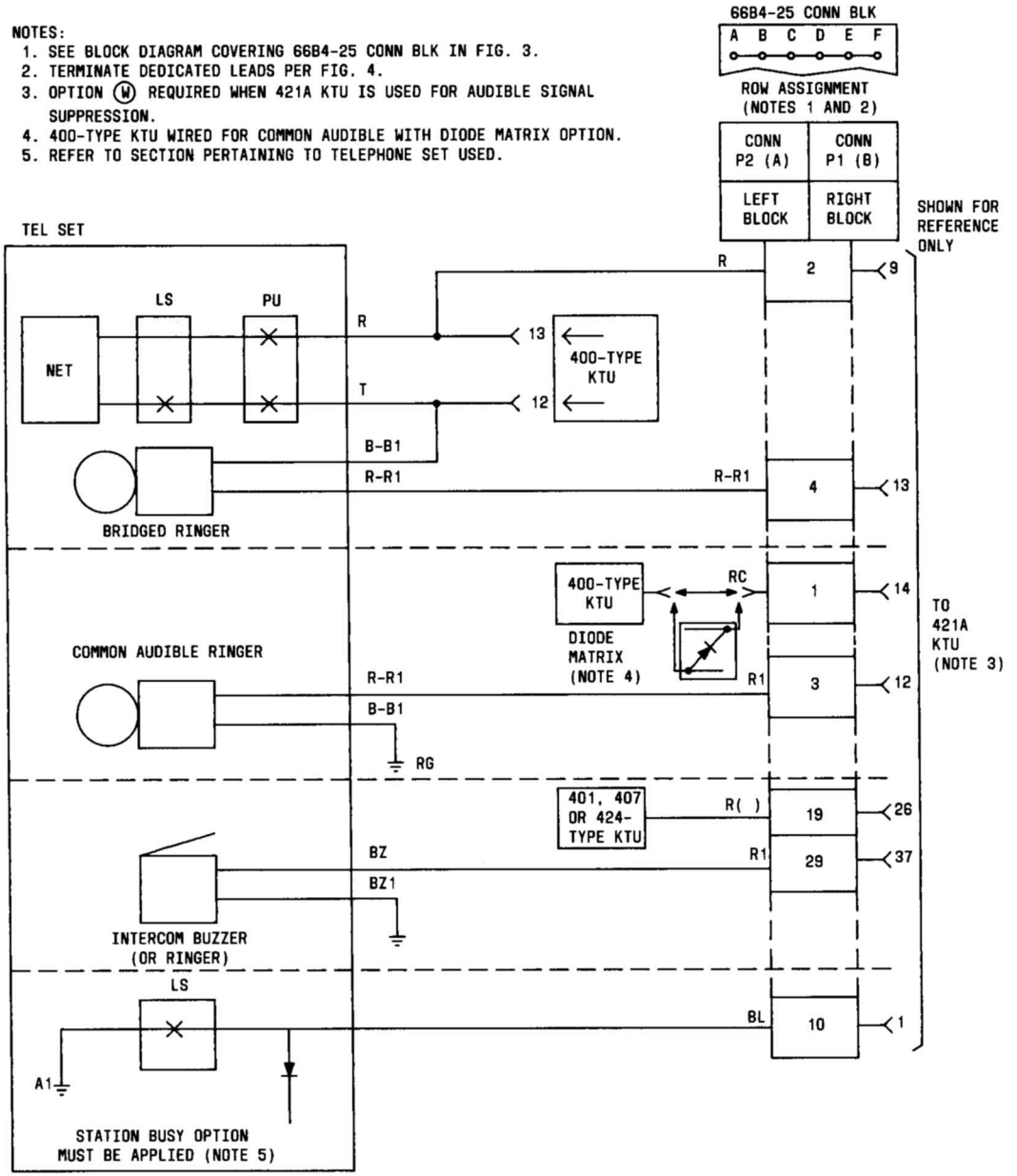

Fig. 16—Nondedicated Lead Connections for 421A KTU (Wired for Audible Signal Suppressor) in 110A Apparatus Mounting

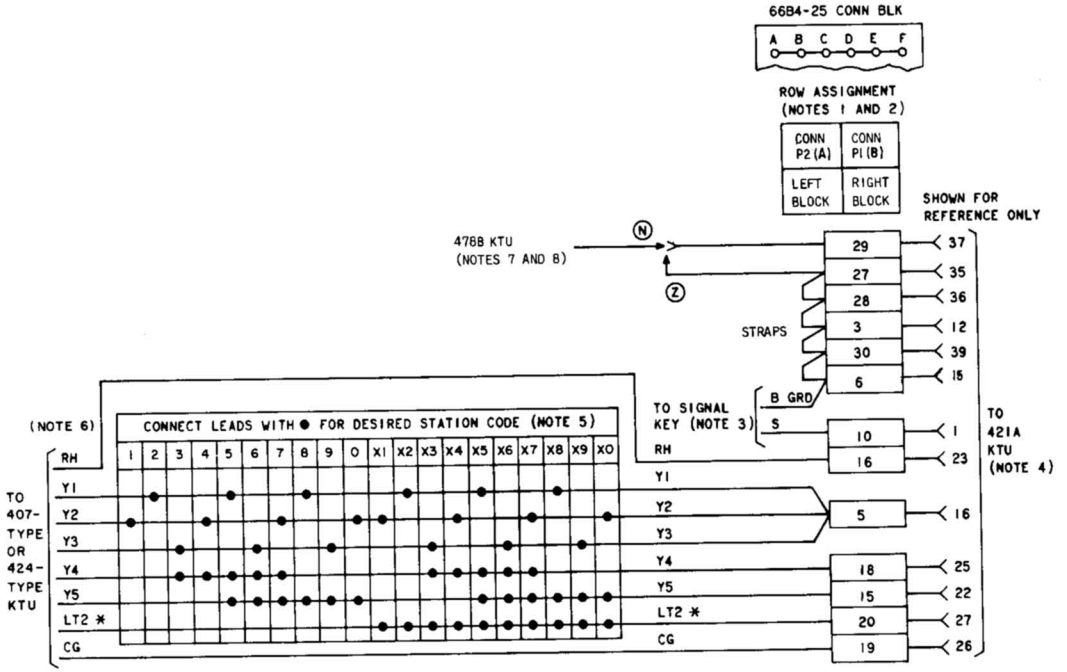

NOTES:

1. SEE BLOCK DIAGRAM COVERING 66B4-25 CONN BLK IN FIG. 3.
2. TERMINATE DEDICATED LEADS PER FIG. 4.
3. PROVIDE SEPARATE SIGNAL KEY FOR EACH STATION CODE TO BE SELECTED.
4. PROVIDE A SEPARATE 421A KTU FOR EACH STATION CODE TO BE SELECTED.
5. SELECT CODE AND CONNECT LEADS FOR SELECTED CODE AS SHOWN IN VERTICAL COLUMN.
6. A 400J DIODE (PROCURE LOCALLY) MUST BE CONNECTED AS SHOWN BELOW WHEN PROVIDING DSS IN A DIAL EQUIPPED SELECTOR ONLY ARRANGEMENT.

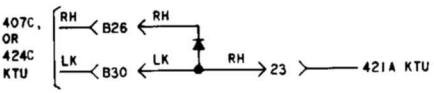

7. IF MORE THAN ONE 421A KTU IS USED FOR DSS, CONNECT AS SHOWN:

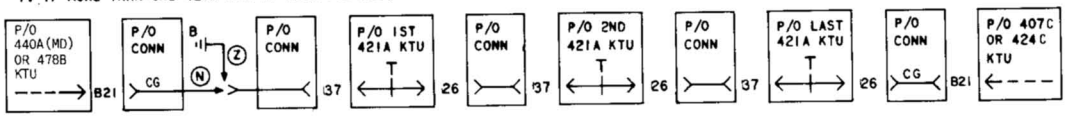

8. (N) WITH "TOUCH-TONE".
   (Z) WITHOUT "TOUCH-TONE".

* USE WITH 424C KTU.

Fig. 17—Nondedicated Lead Connections for 421A KTU (Wired for DSS Feature) in 110A Apparatus Mounting

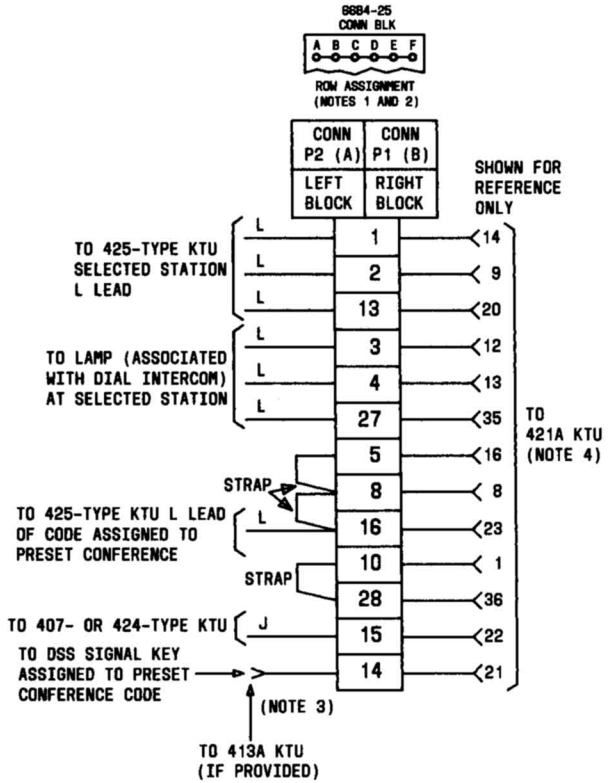

OPTION STRAPPING ON 421A KTU OPTION BLOCK

FEATURE	OPTION	STRAP TERMINALS
PRESET CONFERENCE	W	1 TO 2 5 TO 6 7 TO 8

NOTES:
1. SEE BLOCK DIAGRAM COVERING 66B4-25 CONN BLK IN FIG. 3.
2. TERMINATE DEDICATED LEADS PER FIG. 4.
3. PROVIDE 413A KTU ONLY WHEN ACCESS TO THE PRESET CONFERENCE IS BY DIAL CODE OR BY DIAL CODE AND DSS. DO NOT PROVIDE 413A KTU WHEN ACCESS TO THE PRESET CONFERENCE IS LIMITED TO DSS.
4. PROVIDE (W) OPTION.

Fig. 18—Nondedicated Lead Connections for 421A KTU (Wired for Preset Conference) in 110A Apparatus Mounting

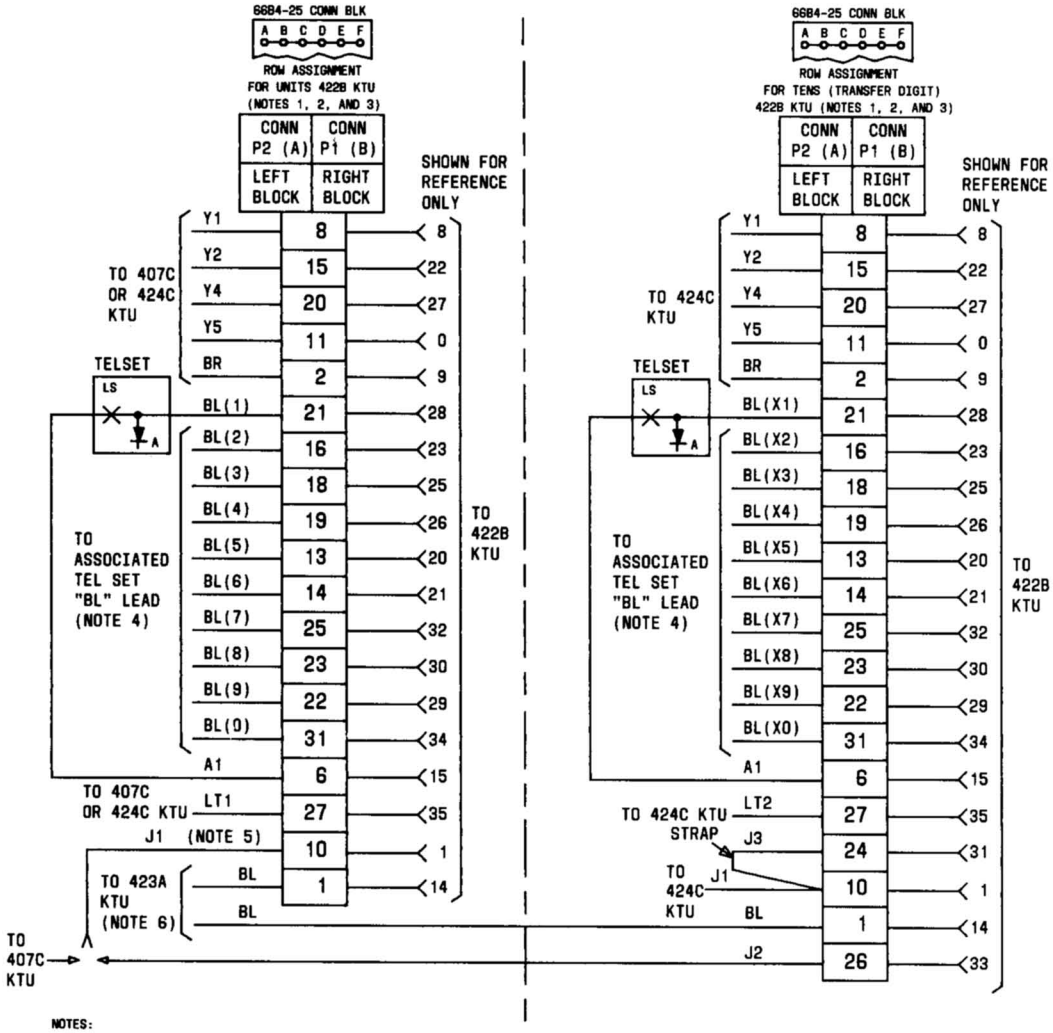

NOTES:

1. SEE BLOCK DIAGRAM COVERING THE 6684-25 CONN BLK IN FIG. 3.
2. TERMINATE DEDICATED LEADS PER FIG. 4.
3. PROVIDE A SEPARATE 422B KTU FOR THE UNITS GROUP (1-0, SINGLE DIGIT NOS.) AND FOR THE TENS GROUP (X1-X0, TWO DIGIT NOS.)
4. PROVIDE AND INSTALL A DIODE IN THE "A" LEAD OF THE ASSOCIATED TEL SETS AS SHOWN IN TEL SET CONNECTION SECTION. FOR CONNECTION, USE THE STATION BUSY OPTION AS SHOWN IN THE CONNECTION SECTION OF THE TYPE SET USED.
5. CONNECT "J1" LEAD OF UNITS 422B KTU WHEN A 407C KTU IS PROVIDED FOR THE DIAL INTERCOM CIRCUIT. WHEN A 424C KTU IS PROVIDED, STRAP THE "J1" LEAD OF 422B KTU TO "J2" LEAD OF TENS 422B KTU.
6. 423A KTU ASSOCIATED WITH SAME DIAL INTERCOM AS THE 422B KTUS.

OPTION STRAPPINGS ON 422B KTU OPTION BLOCK

OPTION	FEATURE	STRAP TERMINALS
R*	STATION BUSY TONE	6 TO 8

* - INSTALL 441J OR EQUIVALENT DIODE (PROCURE LOCALLY) AS SHOWN.

Fig. 19—Nondedicated Lead Connections for 422B KTU (Station Busy Selector) in 110A Apparatus Mounting

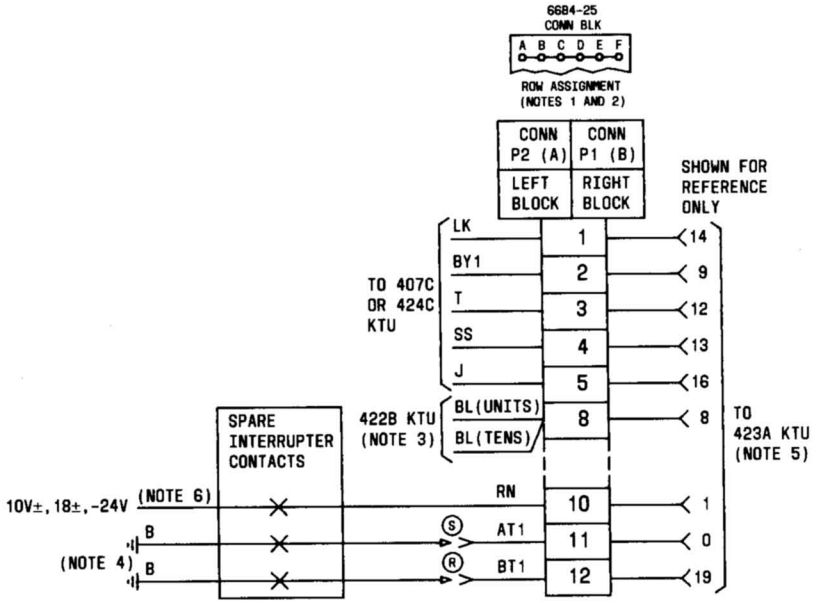

NOTES:

1. SEE BLOCK DIAGRAM COVERING THE 66B4-25 CONN BLK IN FIG. 3.
2. TERMINATE DEDICATED LEADS PER FIG. 4.
3. 422B KTUS ASSOCIATED WITH THE SAME DIAL INTERCOM AS THE 423A KTU.
4. CONNECT TO B GRD AS SHOWN.
5. TO ADJUST DIAL TONE VOLUME ON 423A KTU TURN KNURLED WHEEL TO FULL CLOCKWISE POSITION FOR MINIMUM DIAL TONE VOLUME AND TO FULL COUNTERCLOCKWISE POSITION FOR MAXIMUM DIAL TONE VOLUME.

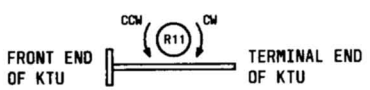

6. IF INTERRUPTED 105V± IS USED FOR DIAL INTERCOM, DO NOT CONNECT THIS LEAD. IF BUZZERS ARE USED FOR DIAL INTERCOM, AUDIBLE SIGNAL IS SUPPLIED ON THIS LEAD VIA SPARE INTERRUPTER CONTACTS TO PIN 1 OF 423A KTU ON 423A KTU OPTION BLK, STRAP TERMINALS 6 TO 7 AND REMOVE (R) OPTION STRAP BETWEEN TERMINALS 4 AND 6.

OPTION STRAPPING ON KTU OPTION BLOCK

OPTION	FEATURE	STRAP TERMINALS ON 423A
T	DIAL TONE	1 TO 2
R	STATION BUSY TONE	4 TO 6
S	AUDIBLE RINGBACK	NO STRAP

Fig. 20—Nondedicated Lead Connections for 423A KTU (Dial Tone, Busy Tone, and Audible Ringback Tone) in 110A Apparatus Mounting

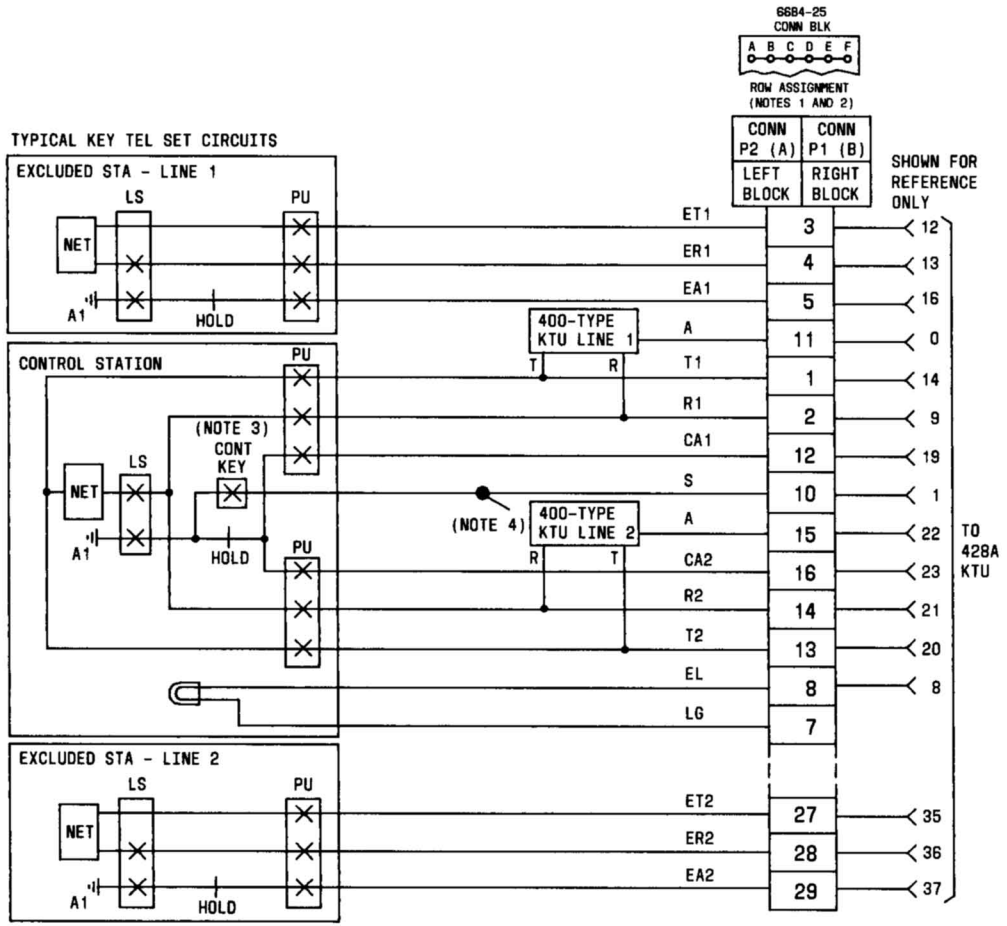

NOTES:
1. SEE BLOCK DIAGRAM COVERING 66B4-25 CONN BLK IN FIG. 3.
2. TERMINATE DEDICATED LEADS PER FIG. 4.
3. CONTROL KEY MAY BE LOCKING OR NONLOCKING.
4. S LEAD CAN ONLY MULTIPLE OTHER 428A KTUS CONTROLLED BY THE SAME STATION.

Fig. 21—Nondedicated Lead Connections for 428A KTU (Multiline Exclusion) in 110A Apparatus Mounting

NOTES:
1. SEE BLOCK DIAGRAM COVERING 6684-25 CONN BLK IN FIG. 3.
2. TERMINATE DEDICATED LEADS PER FIG. 4.
3. T AND R LEADS FROM STATION SIDE OF 400-TYPE KTU TERMINATE DIRECTLY TO THE ASSIGNED PICKUP KEY AT TELEPHONE SET.
4. LIMITATIONS OF 430A KTU ARE AS FOLLOWS:
   (A) FL1 OR FL2 CAN SERVE A MAXIMUM OF 50 LAMPS (51A) EACH. DIVIDE LAMPS AS EVENLY AS POSSIBLE BETWEEN THE TWO LEADS.
   (B) SP LEAD CAN CONNECT TO A MAXIMUM OF 20 STATIONS.
5. ANY TELEPHONE SET EQUIPPED WITH A HOLD KEY HAVING A SET OF TRANSFER CONTACTS AND SUFFICIENT CORD LEADS CAN INITIATE I HOLD. REWIRE HOLD KEY ACCORDING TO CONNECTION SECTION OF TYPE SET USED.
6. WHEN USED WITH CONCENTRATOR SETS AND THE 657 KEY MODULE, CONNECT AS FOLLOWS:

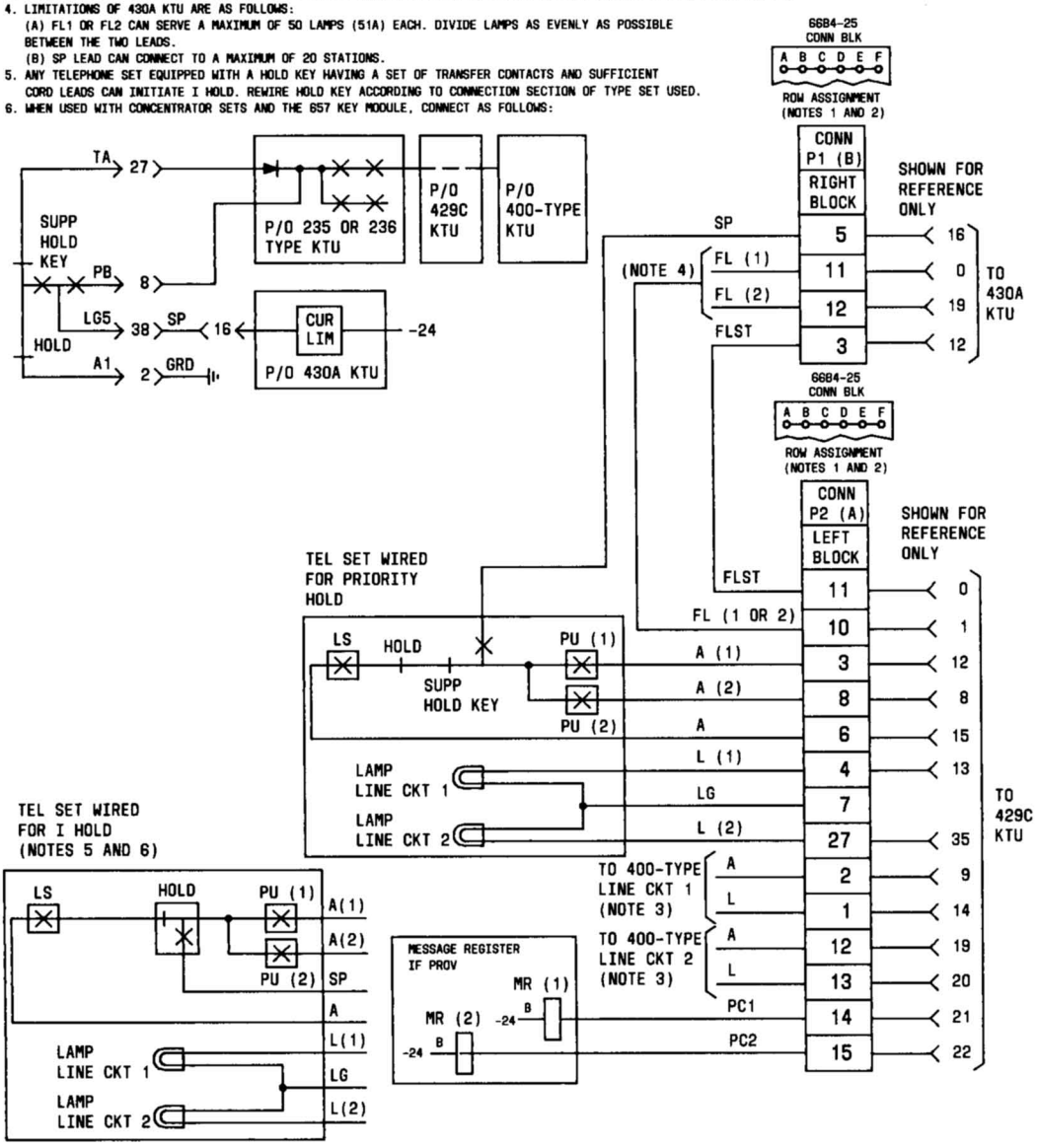

Fig. 22—Nondedicated Lead Connections for 429-Type KTU (Supplementary Hold Detector) and 430A KTU (Flutter Generator) in 110A Apparatus Mounting

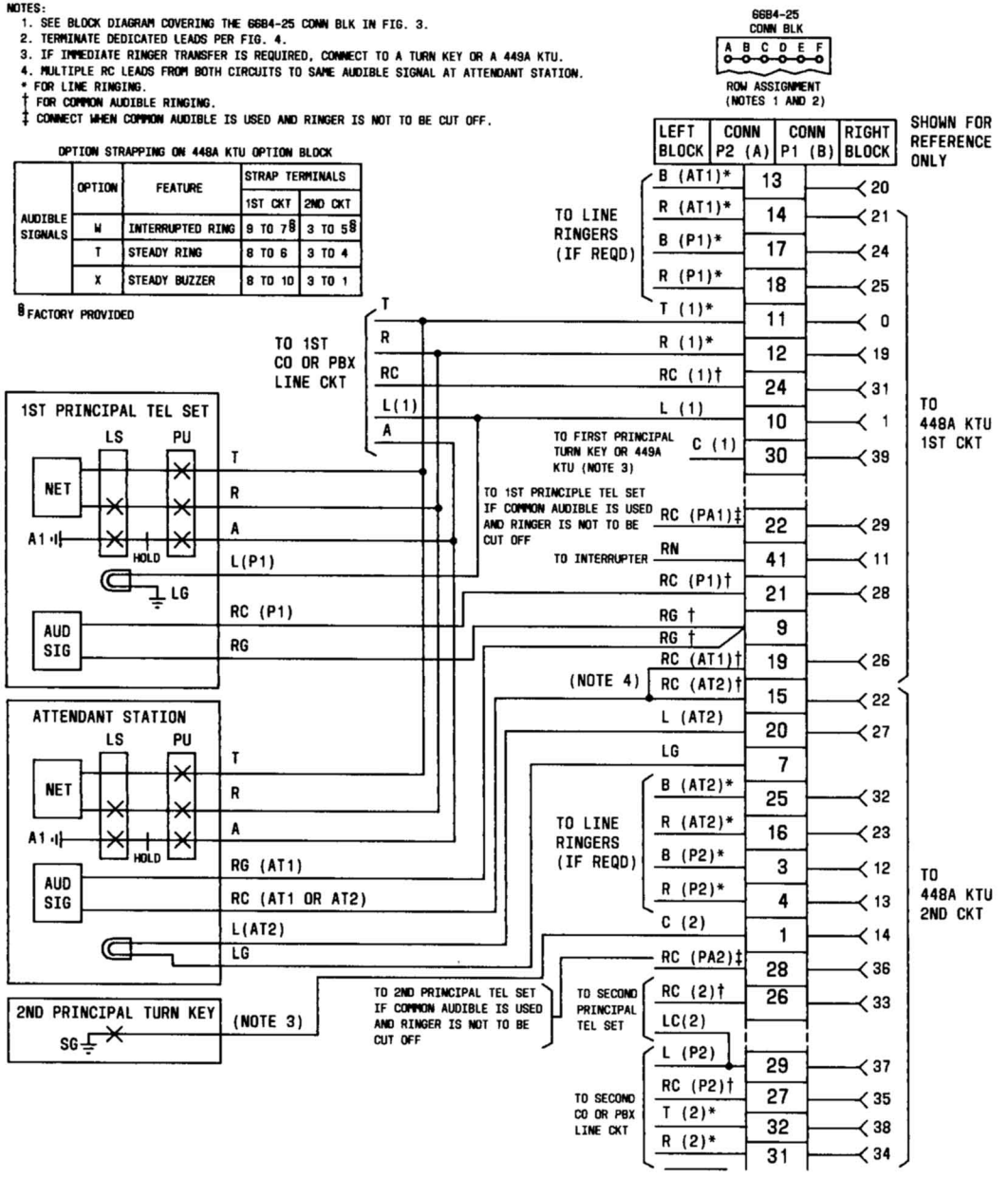

Fig. 23—Nondedicated Lead Connections for 448A KTU (Variable Delay Timer) in 110A Apparatus Mounting

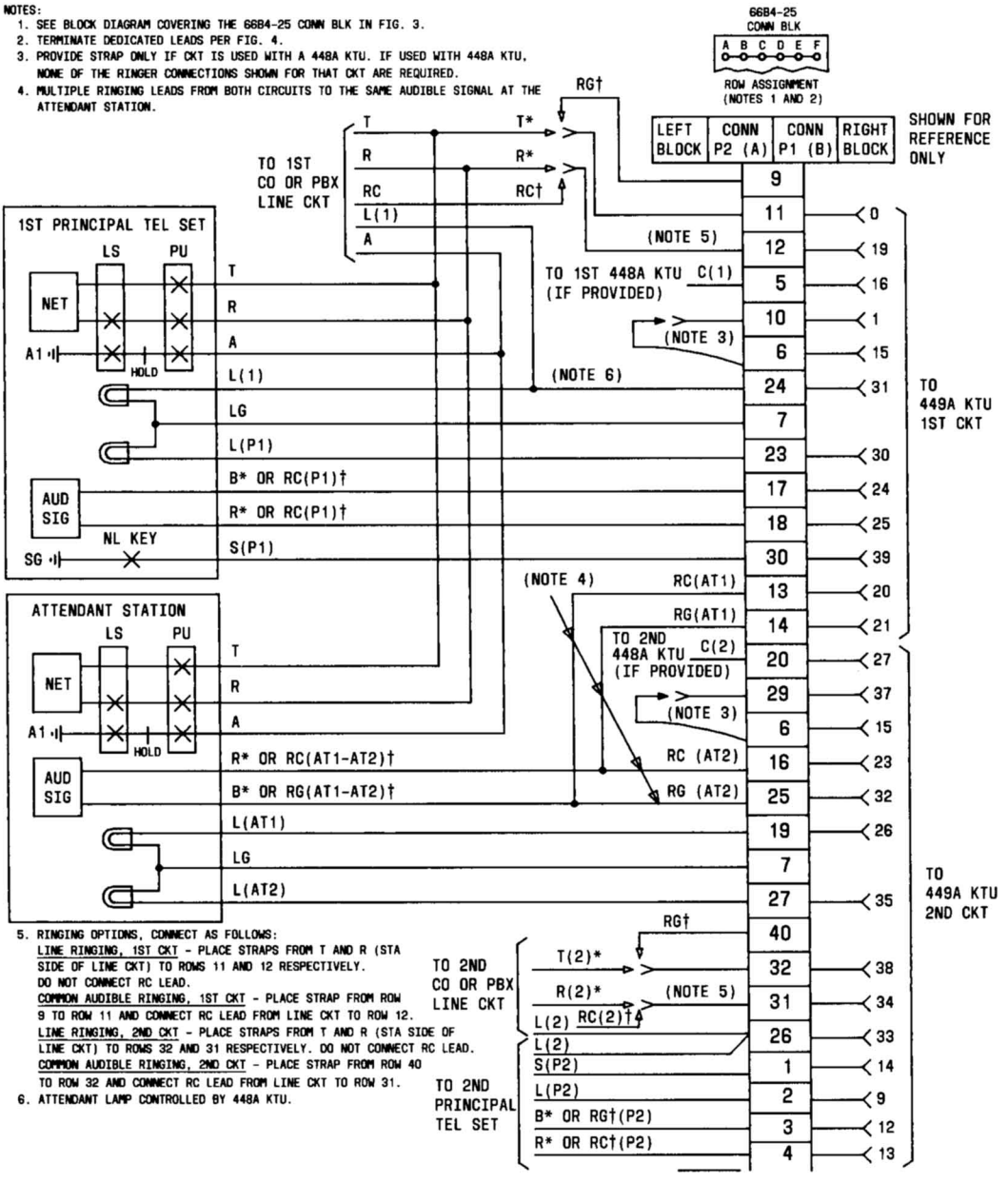

Fig. 24—Nondedicated Lead Connections for 449A KTU (Immediate Transfer Control) in 110A Apparatus Mounting

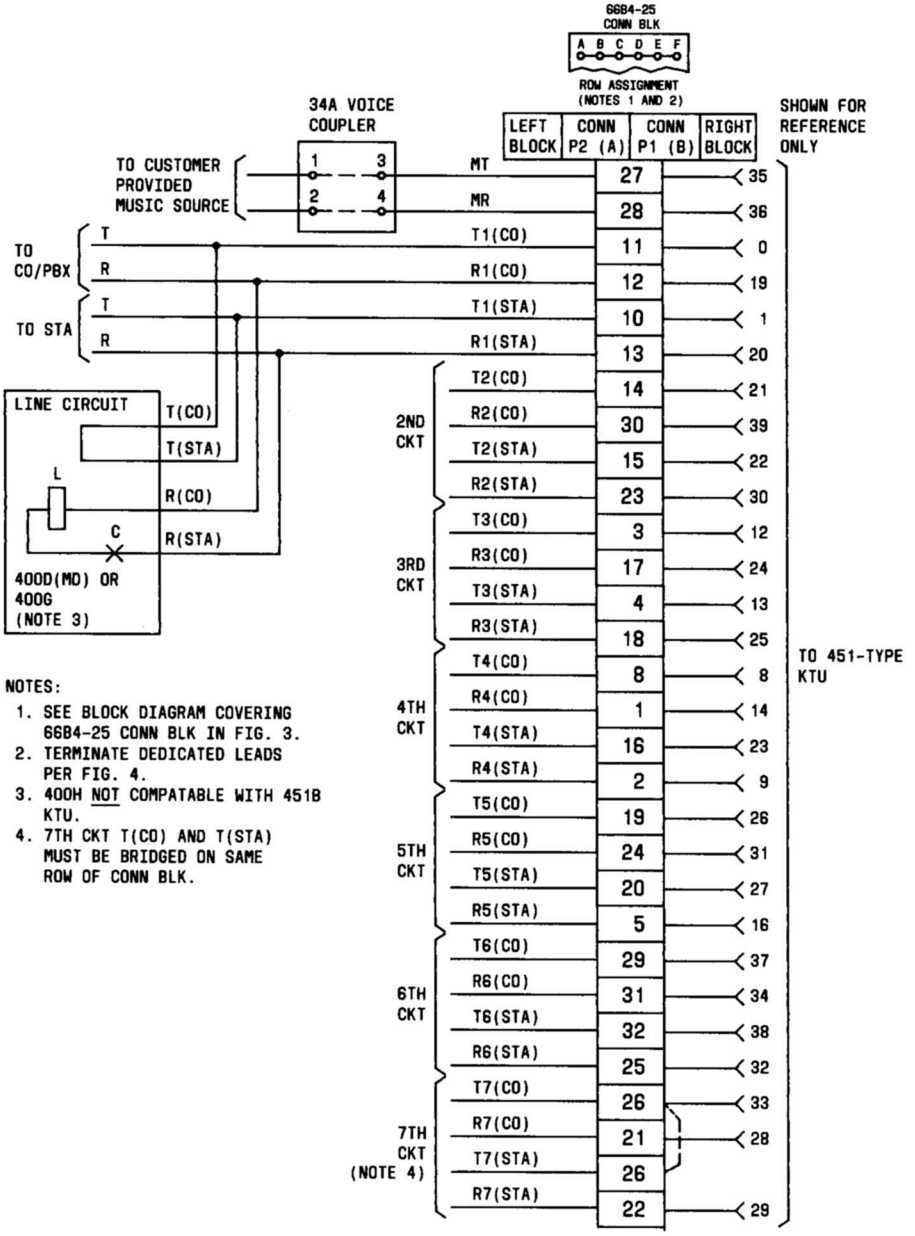

Fig. 25—Nondedicated Lead Connections for 451B KTU (Music-On-Hold) in 110A Apparatus Mounting

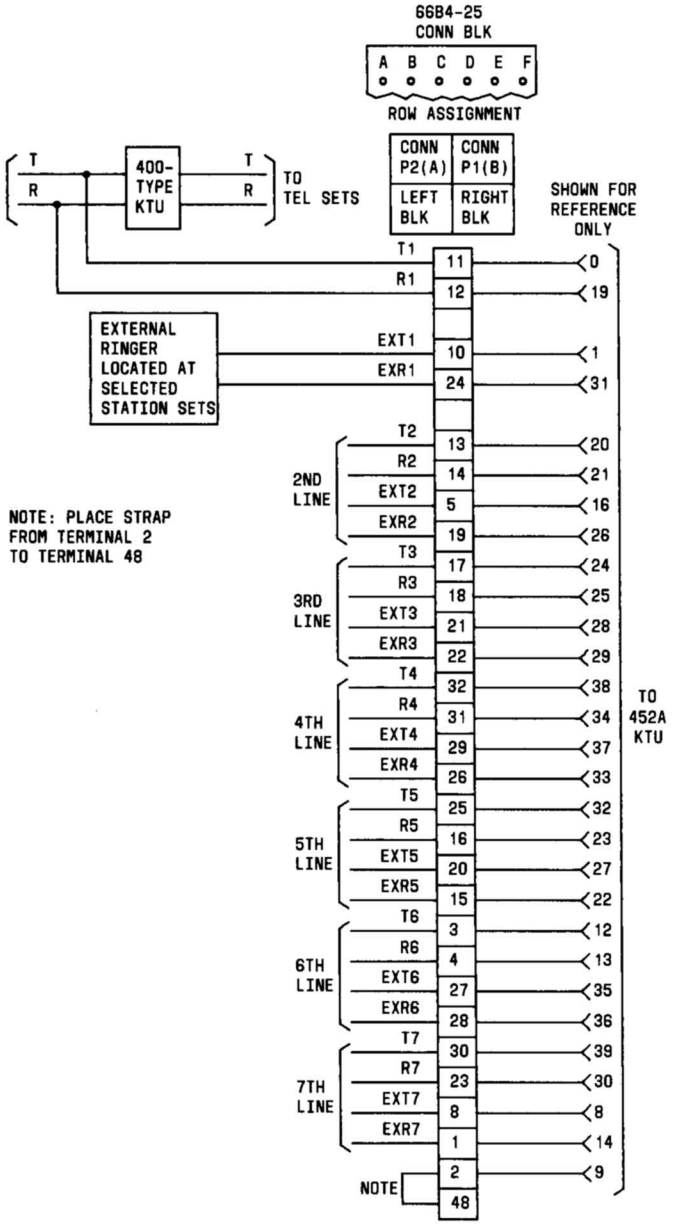

Fig. 26—Nondedicated Lead Connections for 452A KTU (Power Failure Ringing) in 110A Apparatus Mounting

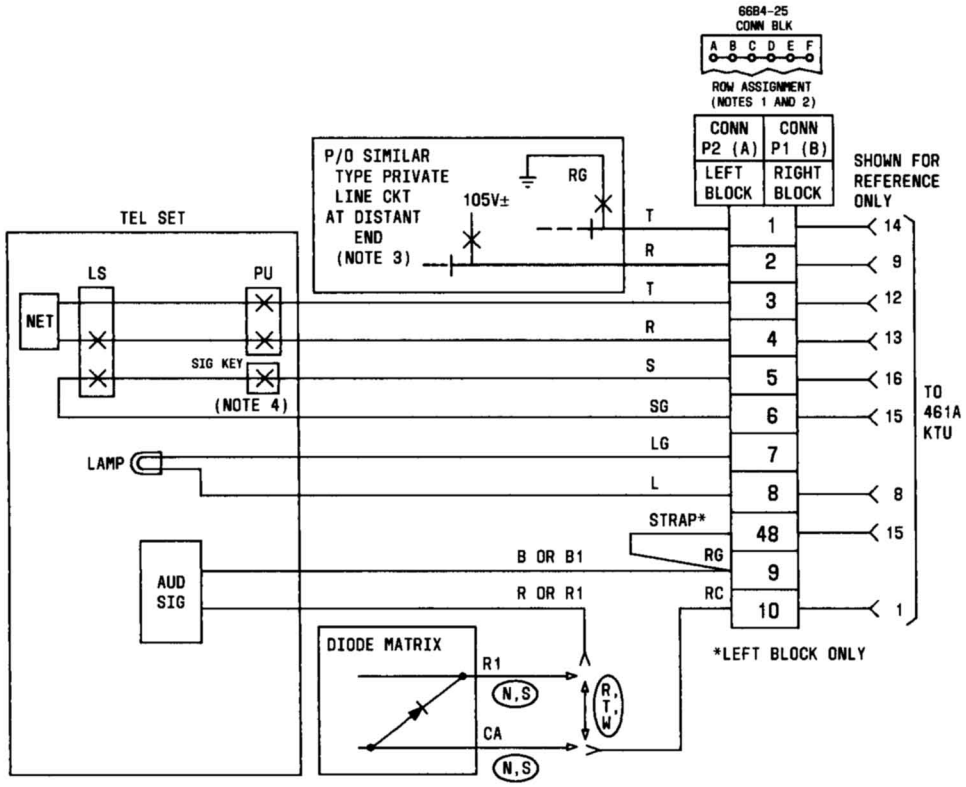

OPTION STRAPPING ON 461A KTU OPTION BLK

OPTION	FEATURES			STRAP TERMINALS
W	AUDIBLE SIGNALS	UNDER CONTROL OF TIME-OUT CIRCUIT (B RELAY)	INTERRUPTED RING	7 TO 8
T			STEADY RING	6 TO 7
S			COMMON WITH DIODE MATRIX CONTROL	7 TO 8
R		UNDER CONTROL OF R RELAY	STEADY RING	4 TO 6
N			COMMON WITH DIODE MATRIX CONTROL	
X	TIME-OUT	10 SECONDS		1 TO 2
Z		16 SECONDS		2 TO 3
WITHOUT X OR Z		23 SECONDS		REMOVE X OR Z STRAPS
M	AUDIBLE RINGBACK TONE (NOTE 5)			9 TO 10

NOTES:
1. SEE BLOCK DIAGRAM COVERING 66B4-25 CONNECTING BLOCK IN FIG. 3.
2. TERMINATE DEDICATED LEADS PER FIG. 4.
3. PVT LINE CKT AT DISTANT END MAY BE A 414A KTU, 419A KTU, 204A KTU, OR ANY OTHER TYPE PVT LINE UNIT REQUIRING RINGING VOLTAGE FOR THE RINGUP CIRCUIT AND FURNISHING RINGING VOLTAGE FROM THE SIGNALING CKT.
4. SIGNAL KEY MAY BE A CONVERTED PICKUP KEY OR ANY EXTERNAL NONLOCKING KEY.
5. FOR SATISFACTORY AUDIBLE RINGBACK TONE, THE RINGING SUPPLY MUST CONTAIN AN AUDIBLE COMPONENT.

Fig. 27—Nondedicated Lead Connections for 461A KTU (Manual Signaling, Ringdown Private Line) in 110A Apparatus Mounting

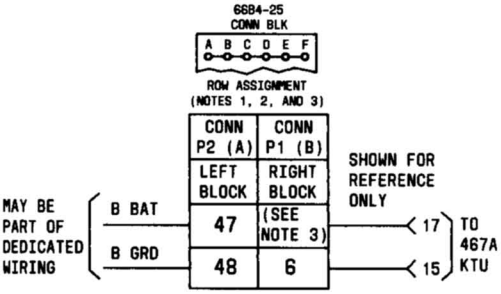

NOTES:
1. SEE BLOCK DIAGRAM COVERING 66B4-25 CONN BLK IN FIG. 3.
2. TERMINATE DEDICATED LEADS PER FIG. 4.
3. KTU MAY BE PLUGGED INTO EITHER CONNECTOR, BUT B BAT IS APPLIED AS A DEDICATED LEAD ON ROW 47 OF THE LEFT BLOCK ONLY.

Fig. 28—Nondedicated Lead Connections for 467A KTU (Voltage Monitor) in 110A Apparatus Mounting

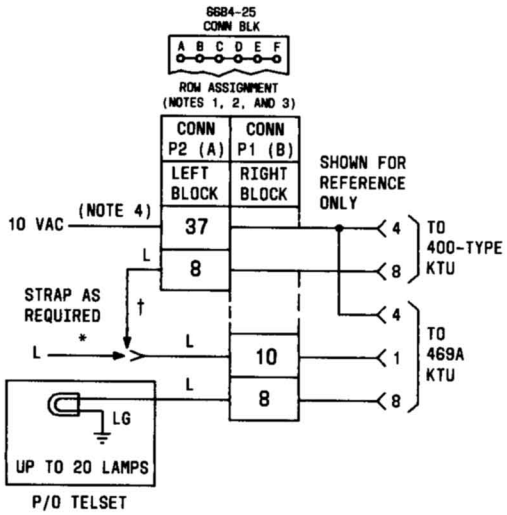

NOTES:
1. SEE BLOCK DIAGRAM COVERING 66B4-25 CONN BLK IN FIG. 3.
2. TERMINATE DEDICATED LEADS PER FIG. 4.
3. 469A KTU MAY BE PLACED IN CONN A OR B WITH L LEAD EXTENDED FROM AN EXTERNAL LINE CIRCUIT OR PAIRED WITH LINE CIRCUIT AS IN THIS EXAMPLE.
4. 10 VAC IS APPLIED AS DEDICATED LEAD ON ROW 37 OF LEFT BLOCK ONLY.

* EXTERNAL LINE CKT
† LINE CKT IN CONN A

Fig. 29—Nondedicated Lead Connections for 469A KTU (Lamp Extender) in 110A Apparatus Mounting

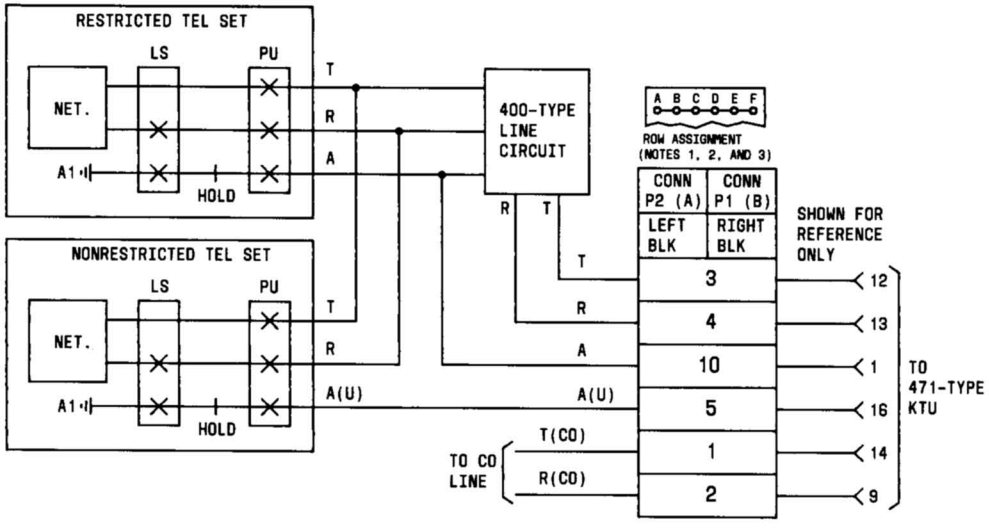

A. STANDARD (PREFERRED) WIRING ARRANGEMENT

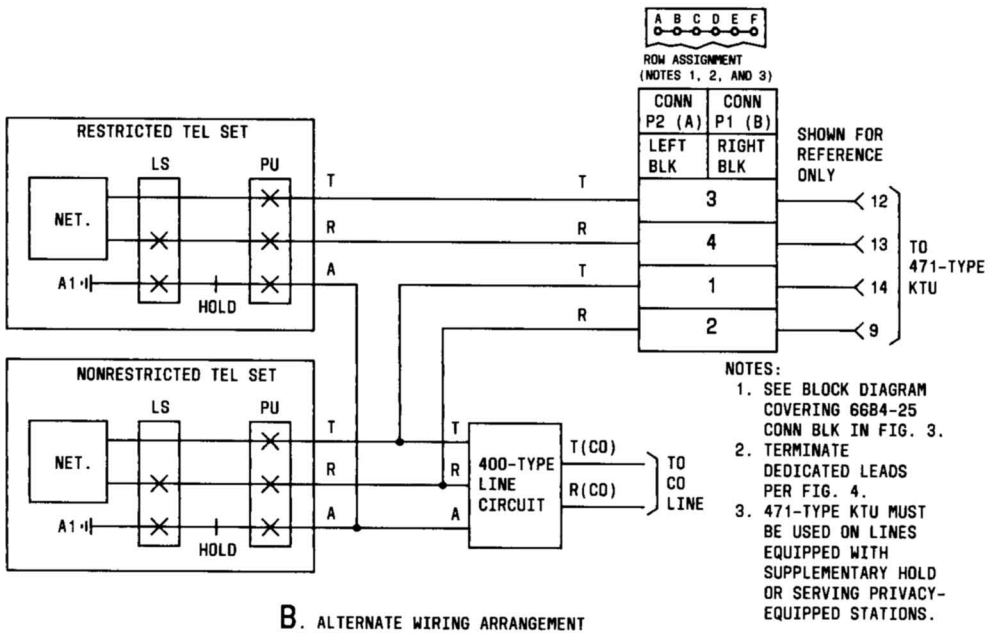

B. ALTERNATE WIRING ARRANGEMENT

Fig. 30—Nondedicated Lead Connections for 471-Type KTU (Battery Reversal Toll Restriction) in 110A Apparatus Mounting

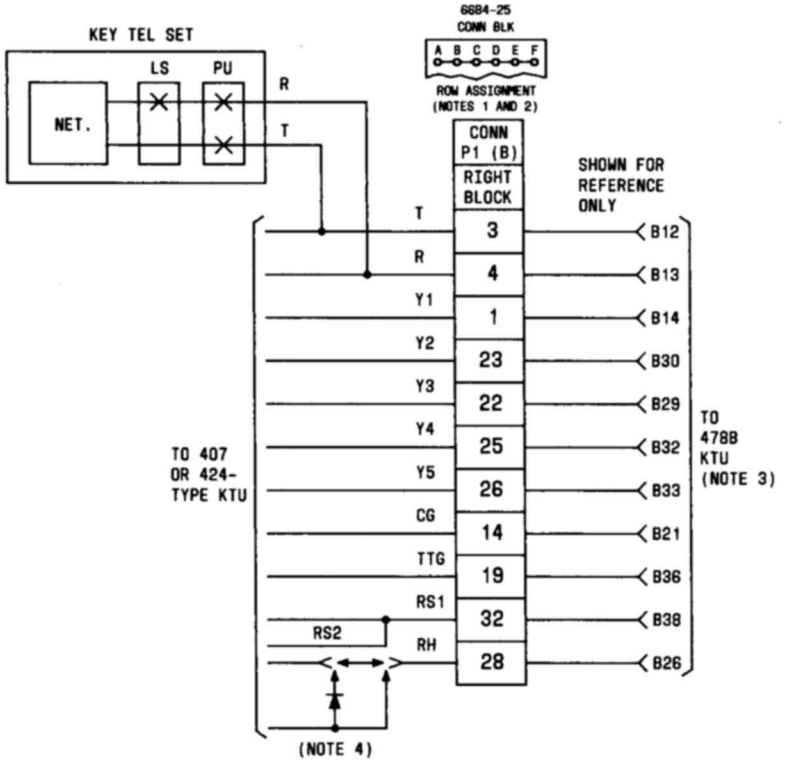

NOTES:
1. SEE BLOCK DIAGRAM COVERING 6684-25 CONN BLK IN FIG. 3.
2. TERMINATE DEDICATED LEADS PER FIG. 4.
3. REQUIRES USE OF BOTH A AND B CONNECTORS.
4. DIODE (400J, LOCALLY PROVIDED) MUST BE FURNISHED IN SYSTEM EQUIPPED WITH DIAL TONE.

Fig. 31—Nondedicated Lead Connections for 478B KTU (TOUCH-TONE Adapter) in 110A Apparatus Mounting

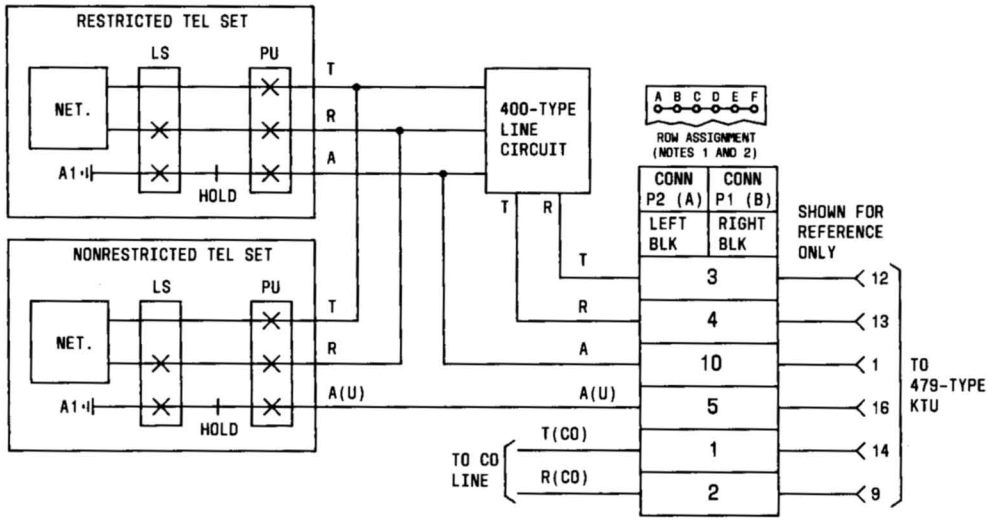

OPTIONS:

UNIT	OPT	FEATURE	PLACE KS-CONN (NOTE 3)
479B KTU	W	TOLL ALLOWED	G-H
	X	TOLL DENIED	H-J
	Y	LOOP START	B-C E-F
	Z	GROUND START	A-B D-E
107A CM	V	2-DIGIT ABSORBTION	A-B
		1ST DIGIT	(NOTE 4)
		2ND DIGIT	
		ABSORB REPEATEDLY AND/OR ABSORB ONLY ONCE	(NOTE 5)
107B CM (NOTE 7)		NPA CODE RESTRICTION	(NOTE 6)

NOTES:

1. SEE BLOCK DIAGRAM COVERING 6684-25 CONN BLK IN FIG. 3.
2. TERMINATE DEDICATED LEADS PER FIG. 4.
3. PLACE KS-21290 L1 CONNECTOR ON TERMINALS AS INDICATED.
4. PLACE KS-CONN ACROSS LIKE-NUMBERED TERMINALS AS NUMBER TO BE ABSORBED:
   - 1ST DIGIT-IN OPTION FIELD AR/1
   - 2ND DIGIT-IN OPTION FIELD A/2
5. REMOVE KS-CONN, IF PROVIDED, FROM TERMINALS A-B, AND PLACE KS-CONN ACROSS LIKE NUMBERED TERMINALS AS EACH NUMBER TO BE ABSORBED AS FOLLOWS:
   - REPEATEDLY-IN OPTION FIELD AR/1
   - ONLY ONCE-IN OPTION FIELD A/2
6. PLACE KS-CONN ACROSS LIKE-NUMBERED TERMINALS AS NPA CODE TO BE RESTRICTED. EACH 107B CIRCUIT MODULE WILL HANDLE TWO NPA CODES.
7. IF 107A IS NOT REQUIRED, TWO 107B MODULES CAN BE MOUNTED ON THE 479-TYPE KTU FOR A TOTAL OF FOUR NPA CODES.

Fig. 32—Nondedicated Lead Connecttions for 479-Type KTU (Rotary Dial Toll Restriction) in 110A Apparatus Mounting

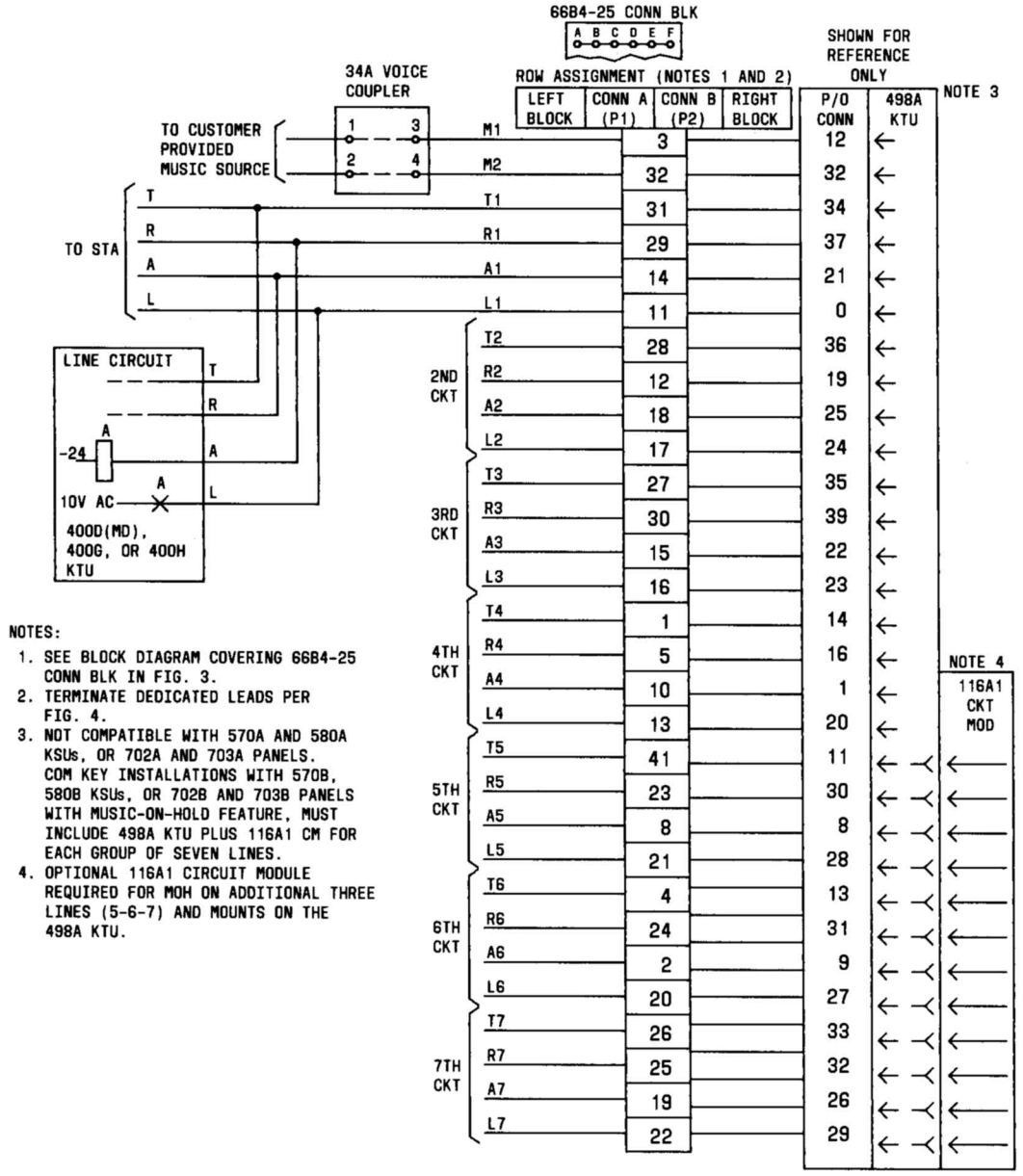

NOTES:

1. SEE BLOCK DIAGRAM COVERING 66B4-25 CONN BLK IN FIG. 3.
2. TERMINATE DEDICATED LEADS PER FIG. 4.
3. NOT COMPATIBLE WITH 570A AND 580A KSUs, OR 702A AND 703A PANELS. COM KEY INSTALLATIONS WITH 570B, 580B KSUs, OR 702B AND 703B PANELS WITH MUSIC-ON-HOLD FEATURE, MUST INCLUDE 498A KTU PLUS 116A1 CM FOR EACH GROUP OF SEVEN LINES.
4. OPTIONAL 116A1 CIRCUIT MODULE REQUIRED FOR MOH ON ADDITIONAL THREE LINES (5-6-7) AND MOUNTS ON THE 498A KTU.

Fig. 33—Nondedicated Lead Connections for 498A KTU and 116A1 CM (Music-On-Hold) in 110A Apparatus Mounting

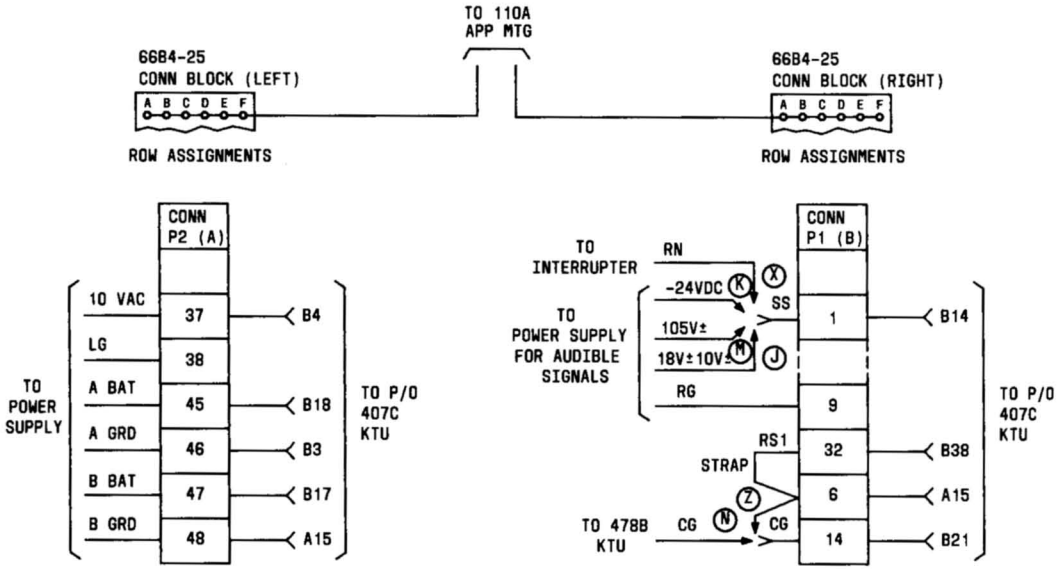

OPTIONS

Z	WITHOUT	"TOUCH-TONE" DIAL STATION
N	WITH	
J	AC BUZZER OR BELL	TYPE AUDIBLE SIGNAL
K	DC BUZZER OR BELL	
M	RINGER	
X	INTERRUPTED	

Fig. 34—Basic Dial Intercom, Strapping and Power Supply Connections for 407-Type KTU in 110A Apparatus Mounting

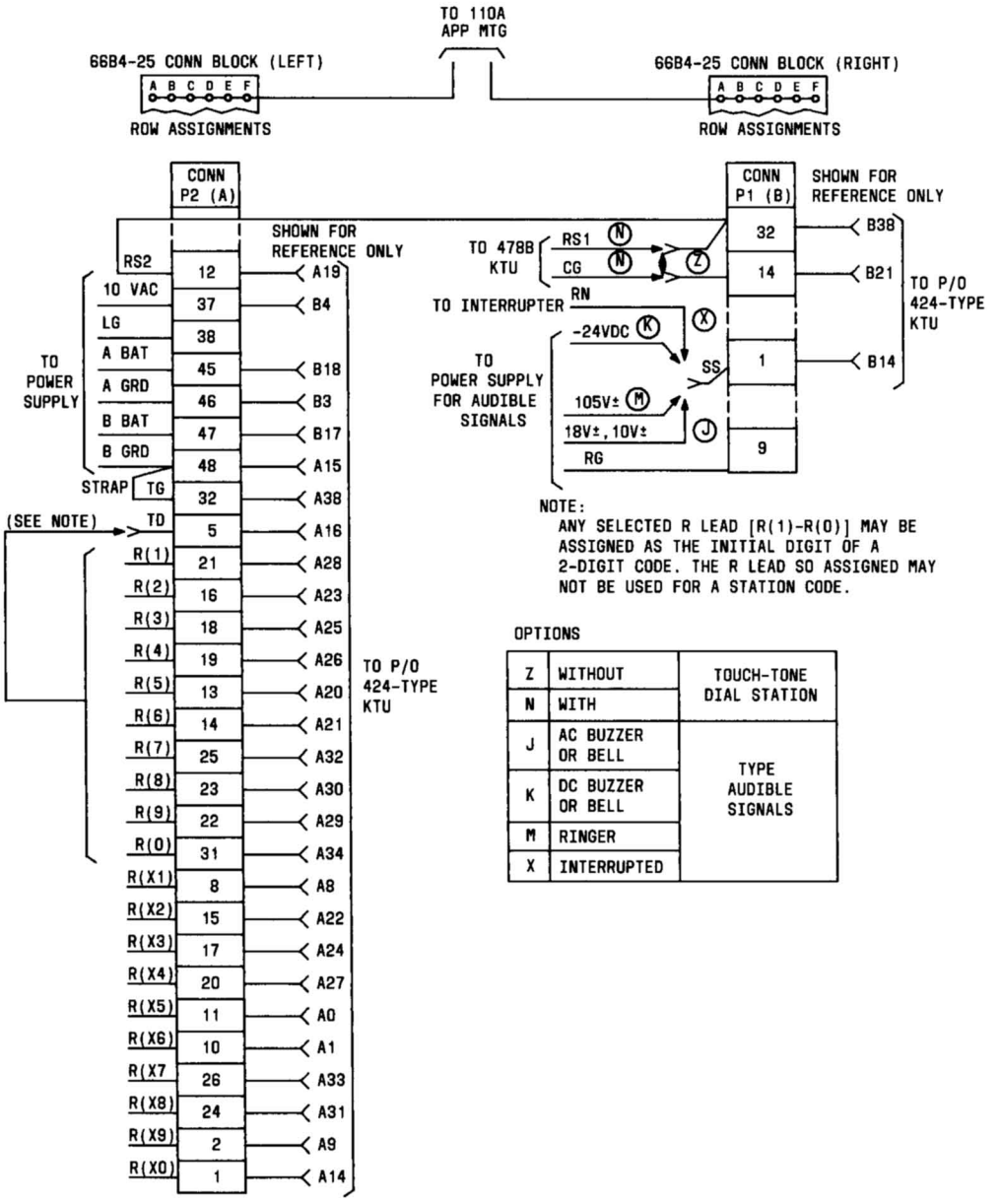

OPTIONS

Z	WITHOUT	TOUCH-TONE DIAL STATION
N	WITH	
J	AC BUZZER OR BELL	TYPE AUDIBLE SIGNALS
K	DC BUZZER OR BELL	
M	RINGER	
X	INTERRUPTED	

Fig. 35—Basic Dial Intercom, Strapping and Power Supply Connections for 424-Type KTU in 110A Apparatus Mounting

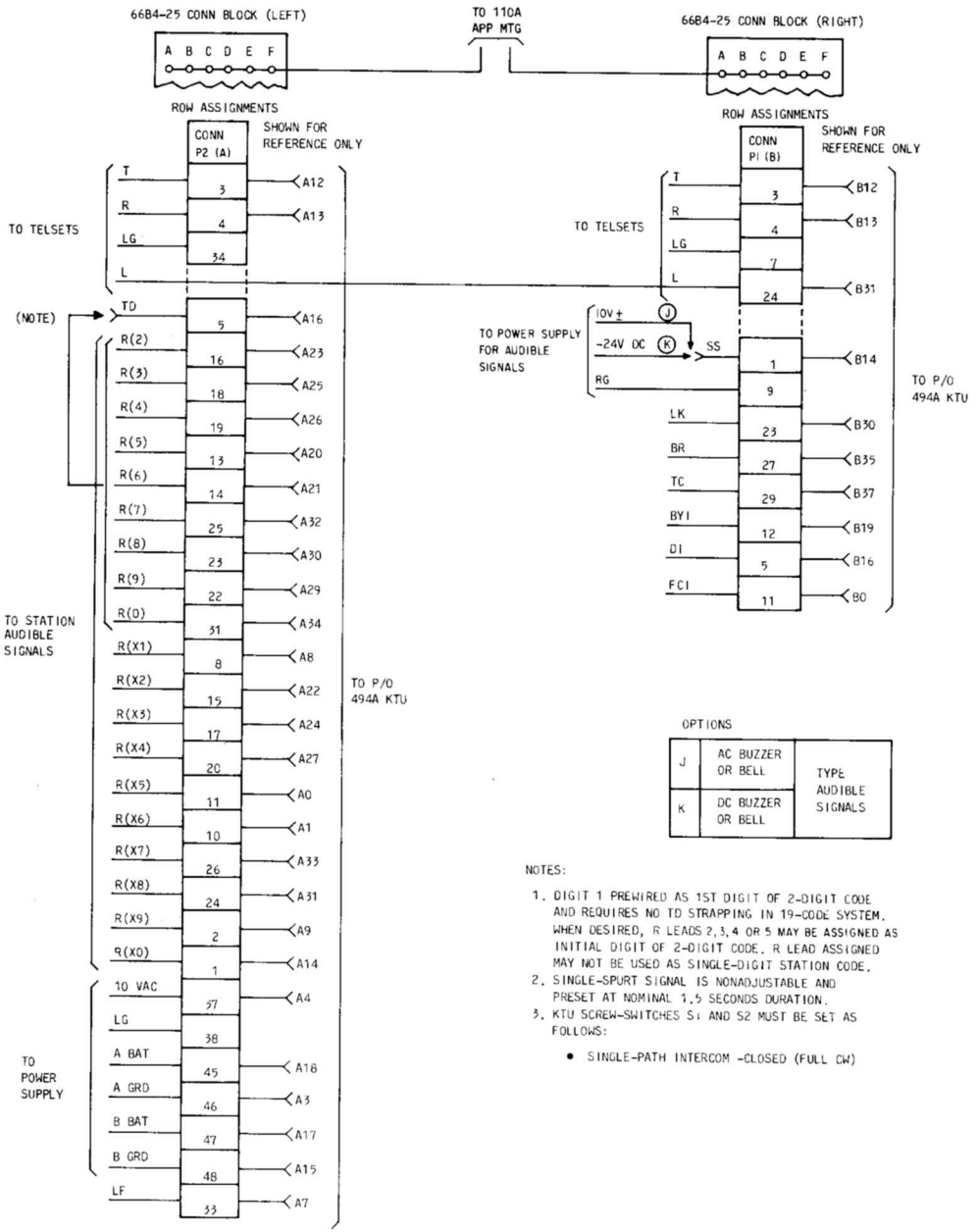

Fig. 36—Basic Dial Intercom With TOUCH-TONE Dialing, Strapping and Power Supply Connections for 494A KTU in 110A Apparatus Mounting

TABLE C

BASIC AND DELUXE DIAL INTERCOM CONNECTIONS
407- AND 424-TYPE KTUS TO ASSOCIATED AND OPTIONAL KTUS

LEAD DESIGNATION KTU		66B4-25 CONN BLOCKS ROW AND COL ASSIGNMENTS		ASSOCIATED KTUs TO PROVIDE DELUXE DIAL INTERCOM				OPTIONAL KTUs				
				STA BUSY SEL		AUDIBLE TONES	FLASHING LAMPS	"TOUCH TONE"	PRESET CONFERENCE		DSS	LONG LINE
				UNITS	TENS							
407-TYPE	424-TYPE	(LEFT) 1	(RIGHT) 2	422B	422B	423A	425B	478B	413A	421A	421A	420A
T	T		3F-B			•		•				•
R	R		4F-B					•				•
Y1	Y1		18F-B	•	•			•			•	
Y2	Y2		17F-B	•	•			•			•	
Y3	Y3		15F-B					•			•	
Y4	Y4	28A-E		•	•			•			•	
LR	LR	28A-E					•					
Y5	Y5	29A-E		•	•			•			•	
LA	LA		24F-B				•					
J	J		31F-B	*		•	•			•		
RS1	RS1		32F-B					•				
FC1	FC1		11F-B				•					
FC2	FC2		13F-B				•					
FC3	FC3		10F-B				•					
AL1	AL1		21F-B				•					
AL2	AL2		20F-B				•					
TC	TC		29F-B				•					
D1	D1		5F-B				•					
TTG	TTG		30F-B					•				•
BR	BR		27F-B	•	•		•					
LK	LK		23F-B			•						
RH	RH		19F-B					•			•	
CG	CG		14F-B					•			•	
BY1	BY1		12F-B			•	•					
SS	SS		1F-B			•						
	LT1	27A-E		†			†					
	LT2	30A-E			†		†				†	
	TG	32A-E										
	TD	5A-E										
B(1-0)	B(1-X0)	As Assigned for Station Connection										•
R(1-0)	R(1-X0)								•			•

* To 407-Type KTU Only.

† To 424-Type KTU Only.

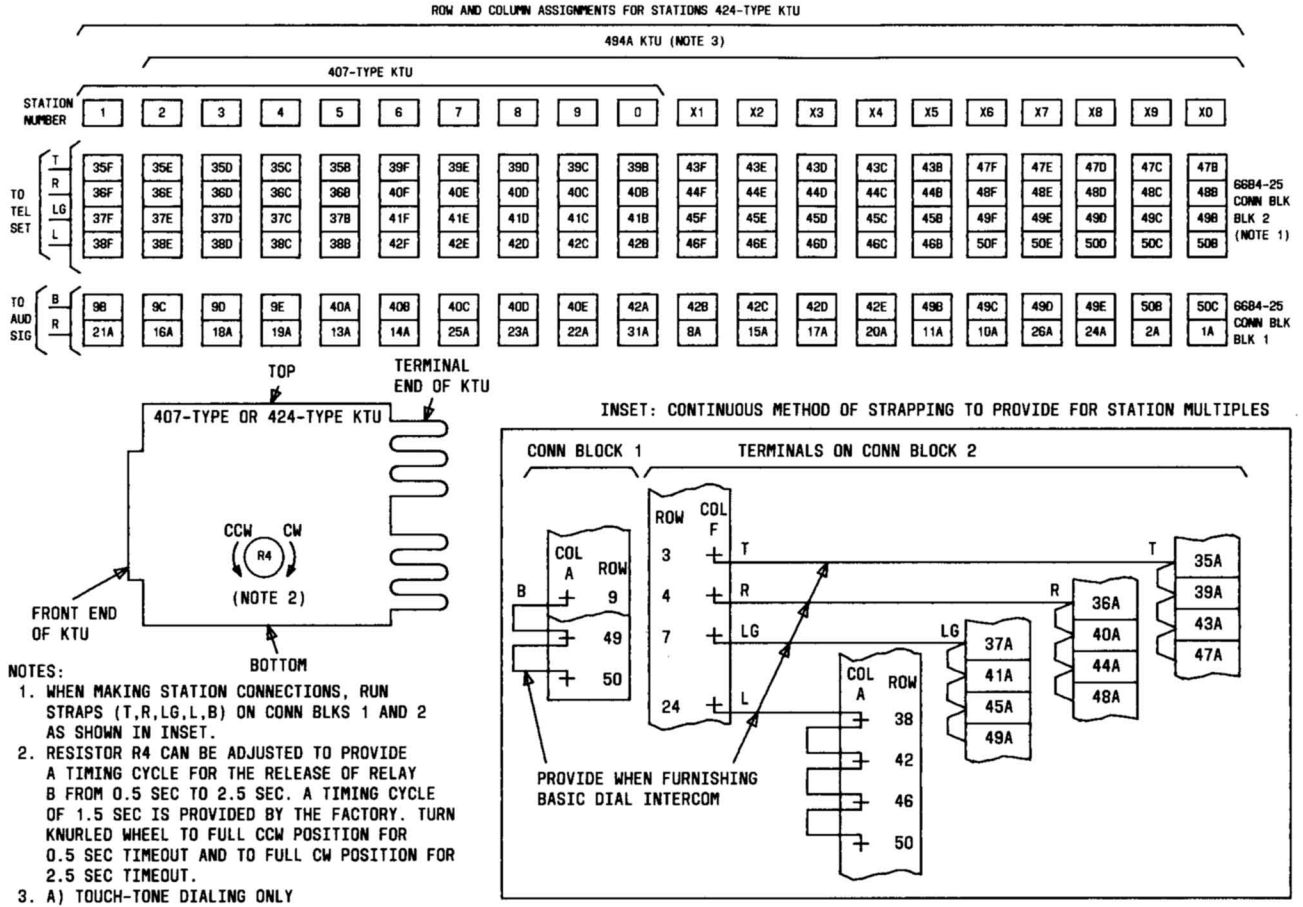

NOTES:

1. WHEN MAKING STATION CONNECTIONS, RUN STRAPS (T,R,LG,L,B) ON CONN BLKS 1 AND 2 AS SHOWN IN INSET.
2. RESISTOR R4 CAN BE ADJUSTED TO PROVIDE A TIMING CYCLE FOR THE RELEASE OF RELAY B FROM 0.5 SEC TO 2.5 SEC. A TIMING CYCLE OF 1.5 SEC IS PROVIDED BY THE FACTORY. TURN KNURLED WHEEL TO FULL CCW POSITION FOR 0.5 SEC TIMEOUT AND TO FULL CW POSITION FOR 2.5 SEC TIMEOUT.
3. A) TOUCH-TONE DIALING ONLY
   B) NON-ADJUSTABLE SINGLE-SPURT SIGNALING DURATION NOMINAL 1.5 SECONDS
   C) SCREW-SWITCHES S1 & S2 SETTINGS: SINGLE PATH -CLOSED (FULL CW)
   COM KEY 2152- OPEN (CCW)

Fig. 37—Basic Dial Intercom, Station Connections

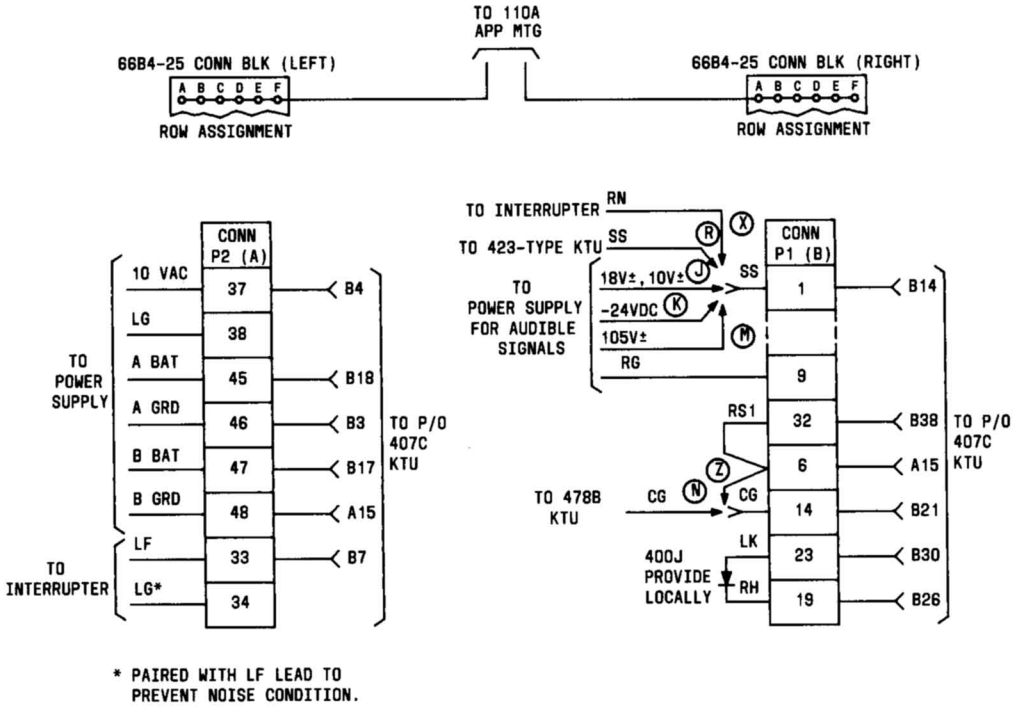

* PAIRED WITH LF LEAD TO PREVENT NOISE CONDITION.

OPTIONS

Z	WITHOUT	TOUCH-TONE DIAL STATION
N	WITH	
J	AC BUZZER OR BELL	TYPE AUDIBLE SIGNALS
K	DC BUZZER OR BELL	
M	RINGER	
X	INTERRUPTED	
R	INTERRUPTED WITH STATION BUSY TONE	

Fig. 38—Deluxe Dial Intercom, Strapping and Power Supply Connections for 407-Type KTU in 110A Apparatus Mounting

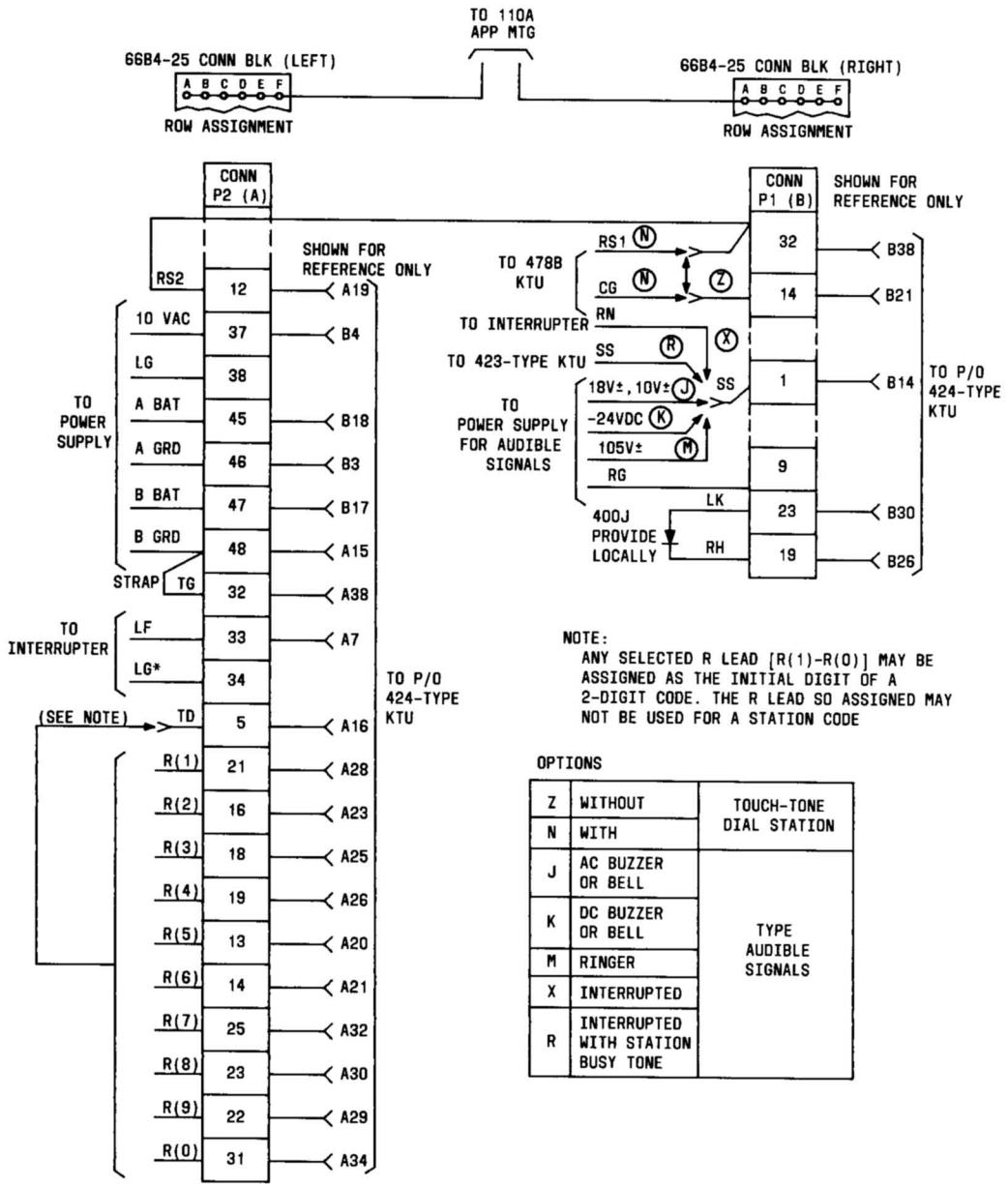

NOTE:
ANY SELECTED R LEAD [R(1)-R(0)] MAY BE ASSIGNED AS THE INITIAL DIGIT OF A 2-DIGIT CODE. THE R LEAD SO ASSIGNED MAY NOT BE USED FOR A STATION CODE

OPTIONS

Z	WITHOUT	TOUCH-TONE DIAL STATION
N	WITH	
J	AC BUZZER OR BELL	TYPE AUDIBLE SIGNALS
K	DC BUZZER OR BELL	
M	RINGER	
X	INTERRUPTED	
R	INTERRUPTED WITH STATION BUSY TONE	

Fig. 39—Deluxe Dial Intercom, Strapping and Power Supply Connections for 424-Type KTU in 110A Apparatus Mounting

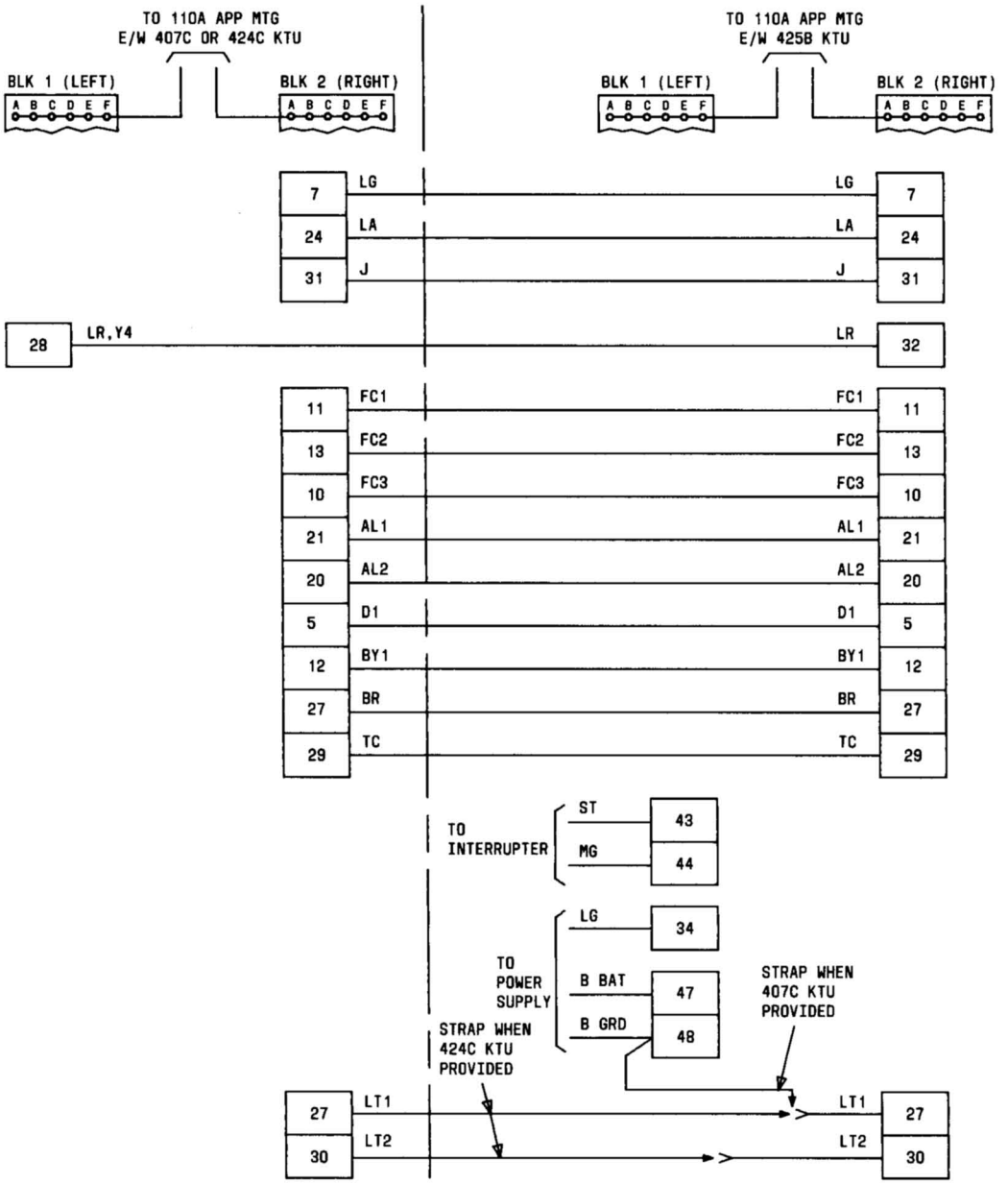

Fig. 40—Deluxe Dial Intercom, Strapping and Power Supply Connections for 425B KTU in 110A Apparatus Mounting

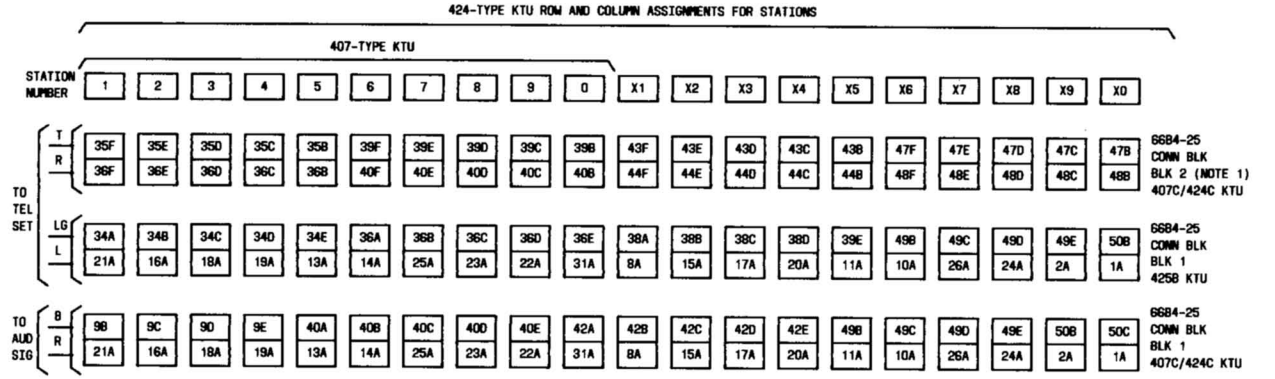

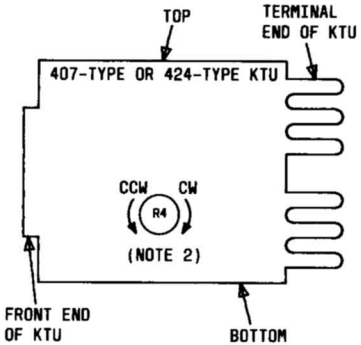

NOTES:
1. WHEN MAKING STATION CONNECTIONS, RUN STRAPS (T,R,B,LG) ON CONN BLKS 1 AND 2 AS SHOWN IN INSET
2. RESISTOR R4 CAN BE ADJUSTED TO PROVIDE A TIMING CYCLE FOR THE RELEASE OF RELAY B FROM 0.5 SEC TO 2.5 SEC. A TIMING CYCLE OF 1.5 SEC IS PROVIDED BY THE FACTORY. TURN KNURLED WHEEL TO FULL CCW POSITION FOR 0.5 SEC TIMEOUT AND TO FULL CW POSITION FOR 2.5 SEC TIMEOUT

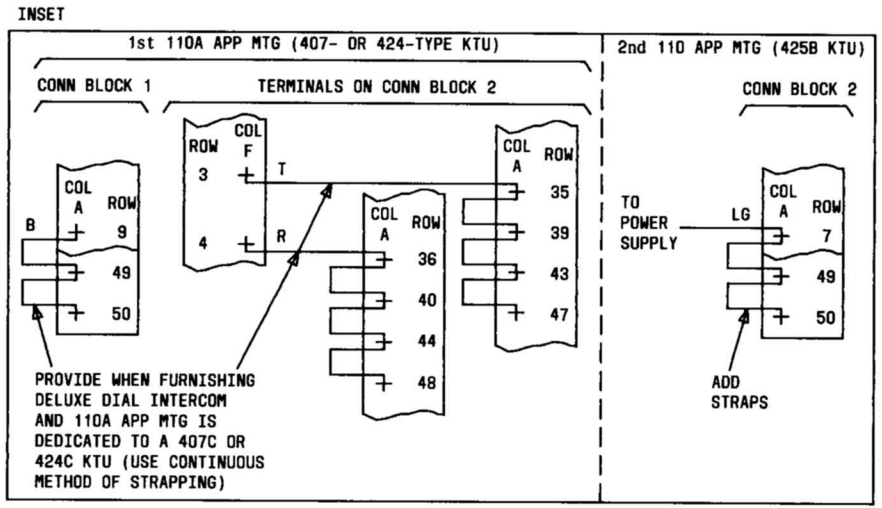

Fig. 41—Deluxe Dial Intercom, Station Connections

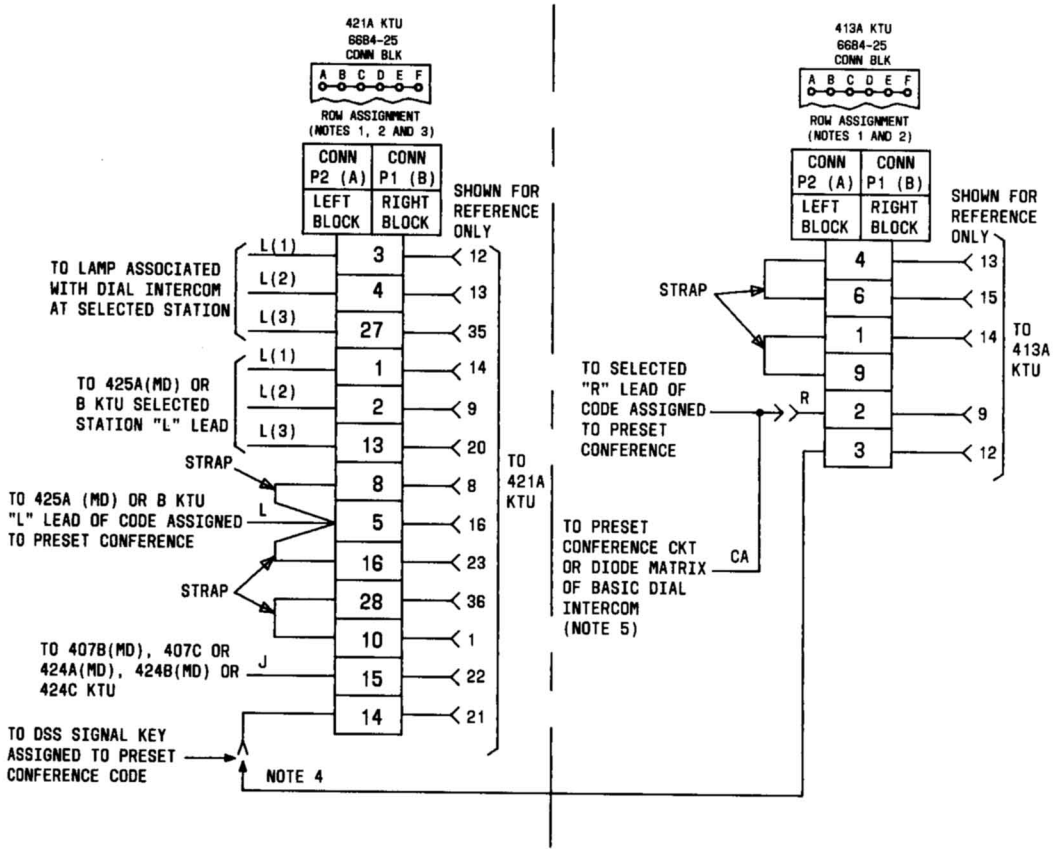

OPTION STRAPPING ON 421A KTU OPTION BLK

OPTION	FEATURE	STRAP TERMINALS
W	PRESET CONFERENCE	1 TO 2, 7 TO 8

NOTES:

1. SEE BLOCK DIAGRAM COVERING 6684-25 CONN BLK IN FIG. 3.
2. TERMINATE DEDICATED LEADS PER FIG. 4.
3. WHEN THIS CIRCUIT IS PROVIDED, RING VOLTAGE (105V±) MUST BE USED TO OPERATE THE AUDIBLE SIGNALS CONNECTED TO THE DIAL INTERCOM LINE.
4. PROVIDE THE 413A KTU ONLY WHEN ACCESS TO THE PRESET CONFERENCE IS BY DIAL CODE OR BY DIAL CODE AND DSS. DO NOT PROVIDE THE 413A KTU WHEN ACCESS TO THE PRESET CONFERENCE IS LIMITED TO DSS.
5. THE "CA" LEAD MUST CONNECT TO THE DIODE MATRIX WHETHER OR NOT THE 413A KTU IS PROVIDED.

Fig. 42—Nondedicated Lead Connections for Preset Conference Circuit of a Deluxe Dial Intercom Line (421A and 413A KTUs) in 110A Apparatus Mounting

SERVICE

630A KEY SERVICE PANEL AND 113A1 CONNECTING UNIT

IDENTIFICATION, INSTALLATION, AND CONNECTIONS

1A2 KEY TELEPHONE SYSTEM

CONTENTS PAGE

1. GENERAL 2
2. IDENTIFICATION 2
A. Purpose 2
B. Ordering Guide 2
C. Common Features 3
D. Covers 3
E. Hinge Assembly (D-180942 Kit of Parts) 3
F. Power 4
3. INSTALLATION 4
4. INSTALLATION OF 630A KEY SERVICE PANEL WITH LARGER KEY TELEPHONE SYSTEMS 6
5. ADDITIONAL FEATURES 7
Music-On-Hold 7

Tables

A. 630A Key Service Panel Jack Assignments 8
B. 630A Key Service Panel Fuse Assignments 9
C. 630A Key Service Panel Cable Connector Terminal Assignments 10
D. 113A1 Connecting Unit Terminal Assignments 14

Figures

1. 630A Key Service Panel 15
2. 113A1 Connecting Unit 16
3. 630A Key Service Panel Mounted on 113A1 Connecting Unit 17
4. 161A Decorative Cover 18
5. 630A Key Service Panel, Jack, and Fuse Block Locations 19
6. 630A Key Service Panel, Cable Connector Terminal Assignments 20
7. 113A1 Connecting Unit, Connecting Block Assignment 24
8. Typical 630A Key Service Panel and 113A1 Connecting Unit With 620-Type Modular Panel for Large Key Telephone Installations 25
9. 400D KTU (MD) Connections (CO/PBX Line) in 630A Key Service Panel and 113A1 Connecting Unit 26

NOTICE

Not for use or disclosure outside the
Bell System except under written agreement

CONTENTS PAGE

10. 400G KTU (MD) Connections (CO/PBX Line) in 630A Key Service Panel and 113A1 Connecting Unit 28

11. 400H KTU Connections (CO/PBX Line) in 630A Key Service Panel and 113A1 Connecting Unit 30

12. 498A KTU Connections (Music-On-Hold) in 630A Key Service Panel and 113A1 Connecting Unit 32

13. 401-Type KTU Connections (Manual Intercom) in 630A Key Service Panel and 113A1 Connecting Unit 32

14. 407C KTU Connections (Dial Intercom, 10-Code Selector) in 630A Key Service Panel and 113A1 Connecting Unit . . 33

15. 424C KTU Connections (Dial Intercom, 19-Code Selector) in 630A Key Service Panel and 113A1 Connecting Unit . . 34

16. 494A KTU Connections (TOUCH-TONE Adapter, 19-Code Selector) in 630A Key Service Panel and 113A1 Connecting Unit 35

17. 407- or 424-type KTU (Rotary Selector) Connections in 630A Key Service Panel and 113A1 Connecting Unit Wired to Externally Mounted 440A KTU (MD) (TOUCH-TONE Adapter) 36

18. 407- or 424-Type (Rotary Selector) Connections in 630A Key Service Panel and 113A1 Connecting Unit Wired to Externally Mounted 478B KTU (TOUCH-TONE Adapter) 37

19. 415A KTU Connections (Automatic, DC Signaling, Private Line) in 630A Key Service Panel and 113A1 Connecting Unit . . 38

1. GENERAL

1.01 This section provides information on the 630A key service panel (KSP) and the 113A1 connecting unit (CU).

1.02 Whenever this section is reissued, the reason(s) for reissue will be listed in this paragraph.

1.03 This section is based on drawing SD-69819-01, Issue 1. If this section is to be used with equipment or apparatus reflecting later issue(s) of the drawing(s), reference should be made to the SDs and CDs to determine the extent of changes and the manner in which the section may be affected.

1.04 Incoming central office (CO) lines are to be installed in compliance with the Federal Communications Commission's (FCC) Registration Program and must be routed through a standard network interface. Information on approved interfaces is contained in Section 461-604-105, entitled Connecting Blocks—66M3-50R—Identification, Installation, and Maintenance.

1.05 After January 1, 1980, connection of customer-provided equipment (CPE) or telephone company-provided equipment to the 1A2 Key Telephone System (KTS) requires the use of a 33B voice coupler when providing music-on-hold.

2. IDENTIFICATION

A. Purpose

2.01 The 630A KSP (Fig. 1) provides mounting and power facilities for 400-type line, intercom, and music-on-hold key telephone units (KTUs). It is used in conjunction with the 113A1 CU or can be connected directly to a key telephone red distribution field without using the 113A1 CU.

2.02 The 113A1 CU (Fig. 2) is a connectorized key telephone distribution field consisting of three 66-type connecting blocks. The 113A1 CU plugs directly into the connectors provided on the 630A KSP.

B. Ordering Guide

- Panel, 630A
- Unit, Connecting, 113A1
- Cover, Decorative, 161A
- Cover, Utility, 163A
- Cover, (End Caps), 153A

- D-180942 Kit of Parts, Hinge Assembly
- Cord, Power (1-1/2 feet)—824013262
- Cord, Power (2 feet)—824013270
- Cord, Power (4 feet)—824013288
- Cord, Power (6 feet)—824013296
- Cord, Power (12 feet)—824010995

C. Common Features

2.03 The 630A KSP has the following features:

- Accommodates 400-series KTUs providing services described in Table A.
- Connectorized for quick connection to 113A1 CU or distribution field.
- Self-contained power unit with two additional receptacles for powering externally mounted modular panels.
- Built-in fuse block assemblies (Table B) with self-indicating fuses.
- Includes KS-15900, L1 interrupter.
- Can be mounted on a vertical surface. The 630A KSP can also be attached to a 113A1 CU with a hinge arrangement (D-180942 Kit of Parts) (Fig. 3).
- Dimensions: 12-3/4 inches wide, 18-3/8 inches high, and 7-1/2 inches deep. When mounted on a 113A1 CU, the depth of the combined units is 12-3/4 inches deep.

2.04 The 113A1 CU has the following features:

- Can be mounted on any vertical surface
- Has provisions for attaching a 630A KSP with the use of a hinge arrangement (D-180942 Kit of Parts)
- Connectorized cables for quick connection to the 630A KSP
- Spare 66-type connecting block for terminating additional station cables and miscellaneous circuits
- Dimensions: 12-3/4 inches wide, 18-3/8 inches high, and 3-1/4 inches deep.

D. Covers

2.05 The 161A decorative cover (Fig. 4) is designed to cover the 630A KSP or 113A1 CU when mounted side by side or when the 630A KSP is mounted on the 113A1 CU with the D-180942 Kit of Parts.

> ***Note:*** If this cover is used when the KSP and CU are mounted side by side, a minimum space of 1 inch must be left between them.

2.06 The 163A utility cover is designed to cover the 630A KSP or 113A1 CU when mounted side by side. The sides can be covered by attaching end caps (cover, 153A) to the front cover with the clips supplied. Where several panels are mounted next to each other, the front covers form a continuous surface and only two end caps are installed at the extreme ends. The 163A utility cover cannot be used to cover the 630A KSP when it is mounted on the 113A1 CU with the D-190942 Kit of Parts.

E. Hinge Assembly (D-180942 Kit of Parts)

2.07 The 630A KSP can be mounted on the 113A1 CU with the D-180942 Kit of Parts. The kit of parts consists of a latch, two hinge assemblies, and required screws.

2.08 The latch is pressed into the latch notch on the lower left-hand side of the 630A KSP (Fig. 3). Two self-tapping screws attach each hinge on the top and bottom on the right-hand side of the 113A1 CU. Two threaded connecting pins attach the 630A KSP to the hinges on the 113A1 CU. The 630A KSP is designed to swing to the right ***only.***

F. Power

2.09 The 630A KSP is equipped with a 287A1 power supply which provides the following voltages:

- Talk Battery 18-27 volt dc 0.6 amperes
- Signal Battery 20-27 volt dc 1.9 amperes
- Lamp Battery 8.75-11 volt ac 4.5 amperes

The 287A1 power supply includes the 117B frequency generator which provides the ringing supply of 110-125 volt ac at 30 Hz.

2.10 The voltages on the 287A1 power supply are wired to fuses on the 630A KSP. Refer to Table B for fuse assignments. The only fuse provided on the 287A1 power supply is a 2-amp Bussman MDL 2, 110-volt ac input fuse which appears on the front of the unit.

2.11 If abnormal commercial ac input voltage is suspected:

(1) Remove the ac power cord from the ac receptacle.

(2) Using an ac voltmeter, determine the ac voltage at the commercial ac receptacle.

(3) Pull out the ac voltage adjustment knob on the front of the power supply and turn the pointer to the voltage stenciled on the power supply that is closest to the commercial alternating current. Push the ac adjustment knob back in.

2.12 The power supply is equipped with a parallel blade ground receptacle. Three conductor power cords with male and female standard three-prong plugs are available in the following lengths and should be ordered separately:

Cord, Power (1-1/2 feet)—824013262

Cord, Power (2 feet)—824013270

Cord, Power (4 feet)—824013288

Cord, Power (6 feet)—824013296

Cord, Power (12 feet)—824010995

2.13 The output cord for the power supply is plugged into the J13 receptacle on the 630A KSP. The J1 and J2 receptacles are available to power two modular panels (Table A and Fig. 5). To disconnect output power cord, squeeze the tabs on the top and bottom of the power cord connector and pull out.

2.14 The 287A1 power supply can be changed by removing four screws from the front of the unit and unplugging the input and output cords.

3. INSTALLATION

3.01 Select a wall location for a key telephone installation in accordance with the following:

- Approval and best interest of customer.
- Accessible with adequate illumination for maintenance.
- Wall offering adequate support and stability.
- As close as practicable to stations being serviced.
- Minimum of 9 inches is required to the right of the 113A1 CU for the 630A KSP to open if mounted on the 113A1 CU with the D-180942 Kit of Parts.
- Close to conduit or duct system for cabling purposes.
- Near commercial ac power receptacle.
- Sufficient clearance above floor to avoid damage from water or blows incidental to cleaning.
- Clean, dry, well-ventilated, and free from flammable or corrosive fumes.
- Where the surrounding room temperature normally does not exceed 110°F. Avoid locations near radiators, steam pipes, registers, and other similar heating devices which would subject the equipment to excessive heat.

3.02 Refer to the following sections for additional information required to plan the installation of a KTS:

- Section 518-010-101—Centralized Key Telephone Installations
- Section 518-010-105—KTS, Grounding and Special Protection Requirements
- Section 518-215-100—1A2 KTS, Identification, and Arrangements
- Section 518-215-400—Service, 1A2 KTS, Line Services
- Section 518-215-401—Service, 1A2 KTS, Auxiliary Line Services
- Section 518-215-402—Service, 1A2 KTS, Intercom Services
- Section 518-215-419—Service, 1A2 KTS, 620A, 641A, and 642A Modular Panels.

3.03 Mount the 113A1 CU on the wall near commercial 110-volts ac power receptacle. If the 630A KSP is to be mounted on the 113A1 CU, use the D-180942 Kit of Parts. Refer to paragraphs 2.07 and 2.08 for additional information.

Note: The 287A1 power unit is equipped with a parallel blade ground receptacle.

3.04 If the 630A KSP is to be mounted on the wall, it must be mounted to the left of the 113A1 CU. This is to allow the cables on the 113A1 CU to reach the connectors on the 630A KSP. The cables from the 113A1 CU are connected to the 630A KSP connectors as follows:

113A1 CU	630A KSP
FROM	TO
P10	J10
P11	J11
P12	J12

Refer to Table C for 630A KSP cable connector assignments.

3.05 To prevent damage to the telephone equipment, it is imperative that the 630A KSP be properly grounded and protected to limit voltage surges.



The susceptibility of surge damage to semiconductor components used in 400-series KTUs requires the grounding and protection procedures be followed carefully. Properly protected and grounded installations will minimize service failures that can result from surge voltages or differences between dissimilar grounds. Refer to Section 518-010-105 for coverage of KTS grounding and protection requirements.

3.06 It is recommended all incoming CO/PBX lines be connected to protectors. The protector ground terminal will serve as the primary KSP ground point and must be connected to the best acceptable ground source, preferably, the same as the ac power service. In any case, the KSP ground source and the power service ground source should be bonded together.

3.07 Using No. 12 gauge wire, connect the circuit ground terminal on the 630A KSP to the protector ground terminal if the incoming CO/PBX lines are protected. If they are not protected, connect the 630A KSP ground to the best acceptable ground source.

Note: To remove strain from the ground terminal, run the No. 12 gauge ground wire to the bottom of the 630A KSP and clamp to the backboard or mounting surface.

Refer to Section 518-010-105 for coverage of KTS grounding and protection requirements.

3.08 Prior to terminating the telephone set cables, the selected KTUs shall be carefully unpacked, options applied as applicable, and installed in their appropriate connector.

3.09 Install KTUs by inserting the plug end of the printed wiring boards into the 630A KSP KTU jacks. Secure the KTUs in the jacks with the locking devices provided.



Exercise care when handling and inserting plug-in KTUs to avoid damage to the printed wiring boards and components.

Refer to Table A for KTU jack locations and the following figure for KTU connections:

Fig. 9—400D KTU (MD) Connections (CO/PBX Line) in 630A Key Service Panel and 113A1 Connecting Unit

Fig. 10—400G KTU (MD) Connections (CO/PBX Line) in 630A Key Service Panel and 113A1 Connecting Unit

Fig. 11—400H KTU Connections (CO/PBX Line) in 630A Key Service Panel and 113A1 Connecting Unit

Fig. 12—498A KTU Connections (Music-On-Hold) in 630A Key Service Panel and 113A1 Connecting Unit

Fig. 13—401-Type KTU Connections (Manual Intercom) in 630A Key Service Panel and 113A1 Connecting Unit

Fig. 14—407C KTU Connections (Dial Intercom, 10-Code Selector) in 630A Key Service Panel and 113A1 Connecting Unit

Fig. 15—424C KTU Connections (Dial Intercom, 19-Code Selector) in 630A Key Service Panel and 113A1 Connecting Unit

Fig. 16—494A KTU Connections (TOUCH-TONE Adapter, 19-Code Selector) in 630A Key Service Panel and 113A1 Connecting Unit

Fig. 17—407- or 424-Type KTU (Rotary Selector) Connections in 630A Key Service Panel and 113A1 Connecting Unit Wired to Externally Mounted 440A KTU (MD) (TOUCH-TONE Adapter)

Fig. 18—407- or 424-Type (Rotary Selector) Connections in 630A Key Service Panel and 113A1 Connecting Unit Wired to Externally Mounted 478B KTU (TOUCH-TONE Adapter)

Fig. 19—415A KTU Connections (Automatic, DC Signaling, Private Line) in 630A Key Service Panel and 113A1 Connecting Unit

3.10 The station cables should now be terminated to the 113A1 CU 66-type connecting blocks. Refer to Table D for 113A1 CU terminal assignments.

Note: Connecting block 3 in the 113A1 CU is spare and provided to terminate additional station cables, audible signal configurations, and paging arrangements.

3.11 Before applying power, check for misplaced, missing, or defective fuses. Check for loose or broken wiring connections.

3.12 Apply power and test the KTS for correct operation.

4. INSTALLATION OF 630A KEY SERVICE PANEL WITH LARGER KEY TELEPHONE SYSTEMS

4.01 When a KTS installation exceeds 6 lines or requires additional features, the modular panels described in Section 518-215-419 should be used in addition to the 630A KSP. These modular panels should be mounted to the right of the 630A KSP and the 113A1 CU (Fig. 8). This will provide for the standard right-hand growth arrangement for KTS installations described in Section 518-010-101.

Note: In large installations equipped with dial intercom, it is recommended the 630A KSP be used as the first modular panel.

4.02 The J1 and J2 output power jacks on the 630A KSP are provided to supply power for two modular panels. When more than two modular panels are required, a 79-type power supply should be used.

4.03 The installer shall have the option of terminating the station cables directly on the 113A1 CU and modular panel terminals or may use the 113A1 CU and modular panel terminals as a KTS equipment (red) field with the station terminal (blue) field mounted below.

5. ADDITIONAL FEATURES

Music-On-Hold

5.01 Music-on-hold can be provided by plugging a 498A KTU into jack 6A. Jack 6A is factory-wired to provide music-on-hold for six CO/PBX lines. No further straps are required to provide this service. Refer to Note 1 in Table A for restrictions on music-on-hold for CO lines when the 415 KTU is used.

5.02 The 498A KTU contains four circuits and must be expanded to six circuits with the addition of a 116A1 circuit module to the 498A KTU when more than four CO/PBX lines are to be equipped with music-on-hold.

5.03 The seventh circuit from the 498A KTU, when it is equipped with a 116A1 circuit module, appears as T7, R7, A7, and L7 on connecting block 2 in the 113A1 CU and can be used to provide music-on-hold on a CO/PBX line in an associated modular panel.

5.04 A 33B voice coupler must be connected between the customer's music source and the 630A KSP music input leads for music-on-hold (Fig. 12).

TABLE A

630A KEY SERVICE PANEL JACK ASSIGNMENTS

JACK	ASSIGNMENT	
J1	Power Source for One Additional Modular Panel	
J2	Power Source for One Additional Modular Panel	
J3A	400-Type KTU (CO/PBX Line) or 401-Type KTU (Manual Intercom) or 415A KTU (Automatic, DC Signaling, Private Line) Note 1	Line 1
J3B		Line 2
J4A		Line 3
J4B		Line 4
J5A		Line 5
J5B		Line 6
J6A	498A KTU (Music-On-Hold) Note 2	
J6B	Vacant	
J7A J7B	401-Type (Manual Intercom) Note 3 or 407-Type KTU (Dial Intercom, Rotary Selector, 10 Codes) or 424-Type KTU (Dial Intercom, Rotary Selector, 19 Codes) or 494A KTU (Dial Intercom, TOUCH-TONE Selector, 19 Codes)	
J8	Receptacle for KS-15900L1 Interrupter	
J9	Input Connector for CO/PBX Feeder Lines	
J10 J11 J12	Output Connectors for 113A1 Connecting Unit or Distribution Field	
J13	Power Input From 287A1 Power Supply	

Note 1: If a 415 KTU (automatic, DC signaling, private line) is used and MOH is required, the following conditions must be met:

Music-on-hold can be provided on the first four lines only and the 400-type KTUs associated with MOH can be plugged into connectors J3A, J3B, J4A, and J4B only. The 498A KTU (MOH) must not be equipped with the 116A1 circuit module.

The automatic, DC signaling, private line (415A KTU) can be provided on lines 5 and 6 only and the 415A KTUs associated with the private lines can be plugged into connectors J5A and J5B only.

Note 2: The 498A KTU contains four circuits and must be expanded to six circuits with the addition of a 116A1 circuit module to the 498A KTU when more than four CO/PBX lines are to be equipped with MOH.

Note 3: The 401-type KTU (manual intercom) plugs into J7B only.

TABLE B

630A KEY SERVICE PANEL FUSE ASSIGNMENTS

FUSE	TYPE	AMPERAGE	ASSIGNMENT
F1	70C	3A	10-volt ac feeder fuse for F8, F9, F10, and F11 distribution fuses
F2	70C	3A	10-volt ac feeder fuse for F4, F5, F6, F7, F14, and F15 distribution fuses
F3	70G	5A	10-volt ac for interrupter
F4	70B	2A	10-volt ac for lamp wink on lines 1, 3, and 5
F5	70B	2A	10-volt ac for lamp wink on lines 2, 4, and 6
F6	70B	2A	10-volt ac for lamp wink on jack 1 for additional modular panel
F7	70B	2A	10-volt ac for lamp wink on jack 2 for additional modular panel
F8	70B	2A	10-volt ac for lamp flash, lines 1, 3, and 5
F9	70B	2A	10-volt ac for lamp flash, lines 2, 4, 6, and intercom
F10	70B	2A	10-volt ac for lamp flash on jack 1 for additional modular panel
F11	70B	2A	10-volt ac for lamp flash on jack 2 for additional modular panel
F12	70B	2A	10-volt ac for steady lamp, lines 1, 3, and 5
F13	70B	2A	10-volt ac for steady lamp, lines 2, 4, 6, and intercom
F14	70B	2A	10-volt ac to jack 1 for additional modular panel
F15	70B	2A	10-volt ac to jack 2 for additional modular panel
F16	70B	2A	−24 volt dc −B for additional modular panels, all lines, intercom, and auxiliary services
F17	70B	2A	−24 volt dc −A for additional modular panels, all lines, intercom, and auxiliary services

TABLE C

630A KEY SERVICE PANEL CABLE CONNECTOR TERMINAL ASSIGNMENTS

CONNECTOR J9					
LEAD DESIG	TERMINAL	COLOR	LEAD DESIG	TERMINAL	COLOR
T(1)	26	W-BL		13	G-BK
R(1)	1	BL-W		39	BK-BR
T(2)	27	W-O		14	BR-BK
R(2)	2	O-W		40	BK-S
T(3)	28	W-G		15	S-BK
R(3)	3	G-W		41	Y-BL
T(4)	29	W-BR		16	BL-Y
R(4)	4	BR-W		42	Y-O
T(5)	30	W-S		17	O-Y
R(5)	5	S-W		43	Y-G
T(6)	31	R-BL		18	G-Y
R(6)	6	BL-R	Spare	44	Y-BR
	32	R-O		19	BR-Y
	7	O-R		45	Y-S
	33	R-G		20	S-Y
	8	G-R		46	V-BL
	34	R-BR		21	BL-V
Spare	9	BR-R		47	V-O
	35	R-S		22	O-V
	10	S-R		48	V-G
	36	BK-BL		23	G-V
	11	BL-BK		49	V-BR
	37	BK-O		24	BR-V
	12	O-BK		50	V-S
	38	BK-G		25	S-V

TABLE C (Contd)

630A KEY SERVICE PANEL CABLE
CONNECTOR TERMINAL ASSIGNMENTS

CONNECTOR J10					
LEAD DESIG	TERMINAL	COLOR	LEAD DESIG	TERMINAL	COLOR
IT	26	W-BL	RG	13	G-BK
IR	1	BL-W	RX0	39	BK-BR
D1,A	27	W-O	RG	14	BR-BK
AI	2	O-W	RX1	40	BK-S
LG	28	W-G	RG	15	S-BK
L,LA	3	G-W	RX2	41	Y-BL
R0	29	W-BR	RG	16	BL-Y
RG	4	BR-W	RX3	42	Y-O
R1	30	W-S	RG	17	O-Y
RG	5	S-W	RX4	43	Y-G
R2	31	R-BL	RG	18	G-Y
RG	6	BL-R	RX5	44	Y-BR
R3	32	R-O	RG	19	BR-Y
RG	7	O-R	RX6	45	Y-S
R4	33	R-G	RG	20	S-Y
RG	8	G-R	RX7	46	V-BL
R5	34	R-BR	RG	21	BL-V
RG	9	BR-R	RX8	47	V-O
R6	35	R-S	RG	22	O-V
RG	10	S-R	SS	48	V-G
R7	36	BK-BL	RN	23	G-V
RG	11	BL-BK	SP	49	V-BR
R8	37	BK-O	TDX	24	BR-V
RG	12	O-BK	Spare	50	V-S
R9	38	BK-G	Spare	25	S-V

TABLE C (Contd)

630A KEY SERVICE PANEL CABLE
CONNECTOR TERMINAL ASSIGNMENTS

CONNECTOR J11					
LEAD DESIG	TERMINAL	COLOR	LEAD DESIG	TERMINAL	COLOR
T(1)	26	W-BL	R(5)	13	G-BK
R(1)	1	BL-W	A(5)	39	BK-BR
A(1)	27	W-O	A1(5)	14	BR-BK
A1(1)	2	O-W	LG(5)	40	BK-S
LG(1)	28	W-G	L(5)	15	S-BK
L(1)	3	G-W	T(6)	41	Y-BL
T(2)	29	W-BR	R(6)	16	BL-Y
R(2)	4	BR-W	A(6)	42	Y-O
A(2)	30	W-S	A1(6)	17	O-Y
A1(2)	5	S-W	LG(6)	43	Y-G
LG(2)	31	R-BL	L(6)	18	G-Y
L(2)	6	BL-R	RC(1)	44	Y-BR
T(3)	32	R-O	RG	19	BR-Y
R(3)	7	O-R	RC(2)	45	Y-S
A(3)	33	R-G	RG	20	S-Y
A1(3)	8	G-R	RC(3)	46	V-BL
LG(3)	34	R-BR	RG	21	BL-V
L(3)	9	BR-R	RC(4)	47	V-O
T(4)	35	R-S	RG	22	O-V
R(4)	10	S-R	RC(5)	48	V-G
A(4)	36	BK-BL	RG	23	G-V
A1(4)	11	BL-BK	RC(6)	49	V-BR
LG(4)	37	BK-O	RG	24	BR-V
L(4)	12	O-BK	10V	50	V-S
T(5)	38	BK-G	ACG	25	S-V

TABLE C (Contd)

630A KEY SERVICE PANEL CABLE
CONNECTOR TERMINAL ASSIGNMENTS

CONNECTOR J12					
LEAD DESIG	TERMINAL	COLOR	LEAD DESIG	TERMINAL	COLOR
FC1	26	W-BL	L(7)	13	G-BK
FC2	1	BL-W	M2	39	BK-BR
FC3	27	W-O	M1	14	BR-BK
Y1	2	O-W		40	BK-S
Y2	28	W-G		15	S-BK
Y3	3	G-W		41	Y-BL
Y4	29	W-BR		16	BL-Y
Y5	4	BR-W		42	Y-O
RS1	30	W-S		17	O-Y
CG	5	S-W		43	Y-G
RH	31	R-BL		18	G-Y
Spare	6	BL-R		44	Y-BR
BR	32	R-O		19	BR-Y
TC	7	O-R	Spare	45	Y-S
LT1	33	R-G		20	S-Y
LT2	8	G-R		46	V-BL
BY1	34	R-BR		21	BL-V
J	9	BR-R		47	V-O
LK	35	R-S		22	O-V
TTG	10	S-R		48	V-G
AL1	36	BK-BL		23	G-V
AL2	11	BL-BK		49	V-BR
T(7)	37	BK-O		24	BR-V
R(7)	12	O-BK		50	V-S
A(7)	38	BK-G		25	S-V

TABLE D

113A1 CONNECTING UNIT TERMINAL ASSIGNMENTS

CONNECTING BLOCK 2					
LEAD DESIG	TERMINAL	LEAD DESIG	TERMINAL	LEAD DESIG	TERMINAL
IT	1A-F	RX5	18D		49A-B
IR	2A-F	RX6	18E	RS1	38B
L	3A-F	RX7	18F	CG	39B
LG	4A-F	IT	19A	D1	40B
RG	5A-F	IR	20A	L, LA	41B
R0	6A	L	21A	BR	42B
R1	6B	LG	22A	TTG	43B
R2	6C	RG	23A	LK	44B
R3	6D	RX8	24A	J	45B
R4	6E	A	25A-F	TC	46B
R5	6F	A1	26A-F	TDX	38C
IT	7A-F	LG	27A-F	LT1	39C
IR	8A-F	L	28A-F	LT2	40C
L	9A-F	A	29A-F	AL1	41C
LG	10A-F	A1	30A-F	AL2	42C
RG	11A-F	LG	31A-F	FC1	43C
R6	12A	L	32A-F	FC2	44C
R7	12B	A	33A-F	FC3	45C
R8	12C	A1	34A-F	SP	46C
R9	12D	LG	35A-F	M1	48C-D
RX0	12E	L	36A-F	M2	49C-D
RX1	12F	SS	38A		38E
IT	13A-F	Y1	40A	T(7)	40E
IR	14A-F	Y2	41A	R(7)	41E
L	15A-F	Y3	42A	A(7)	42E
LG	16A-F	Y4	43A	L(7)	43E
RG	17A-F	Y5	44A		49E
RX2	18A	RH	45A	±10V	46F
RX3	18B	BY1	46A	ACG	47F
RX4	18C		48A-B		49F

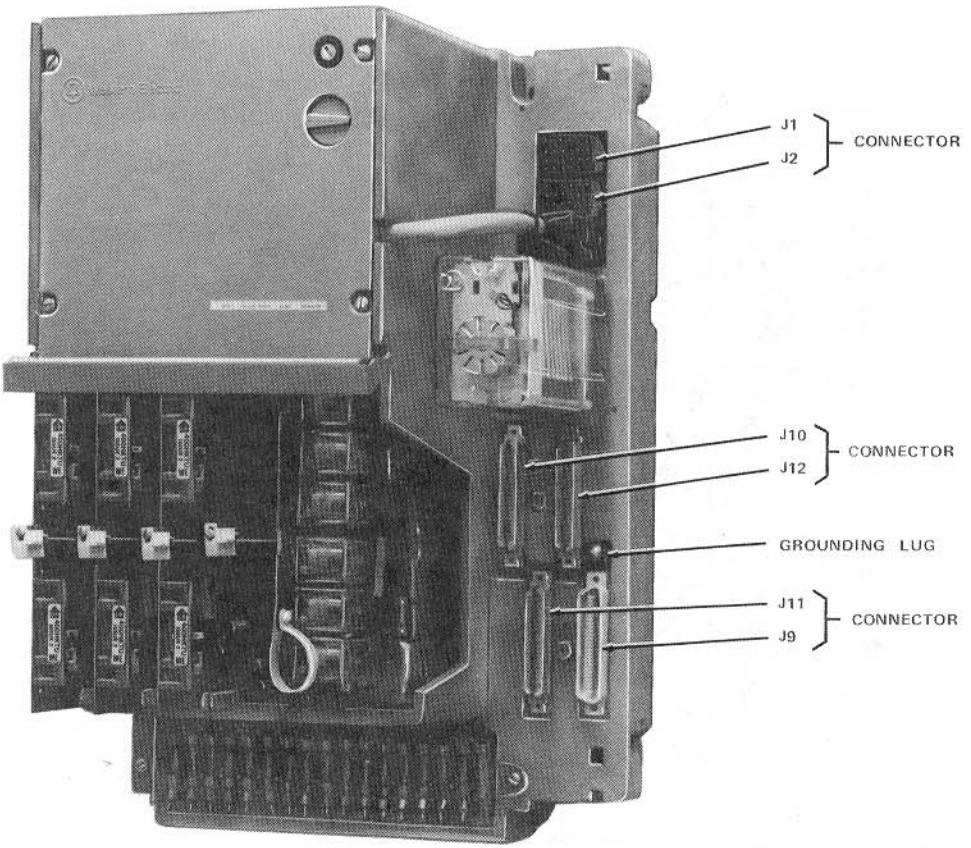

Fig. 1—630A Key Service Panel

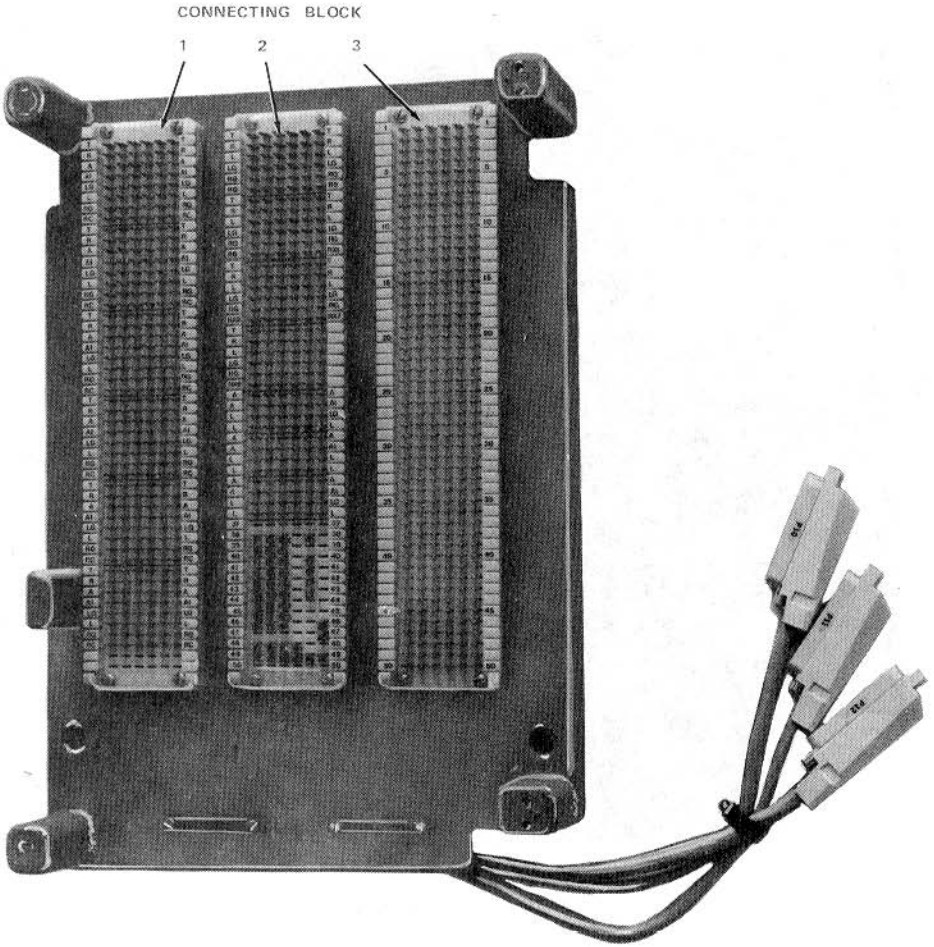

Fig. 2—113A1 Connecting Unit

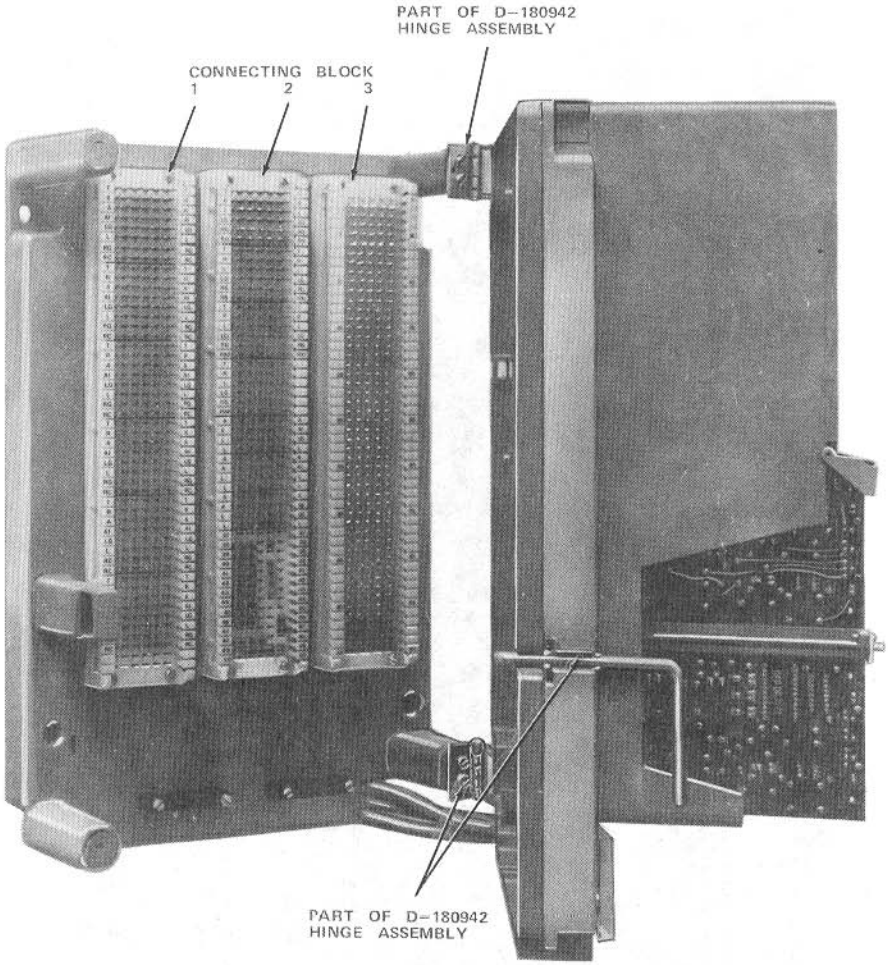

Fig. 3—630A Key Service Panel Mounted on 113A1 Connecting Unit

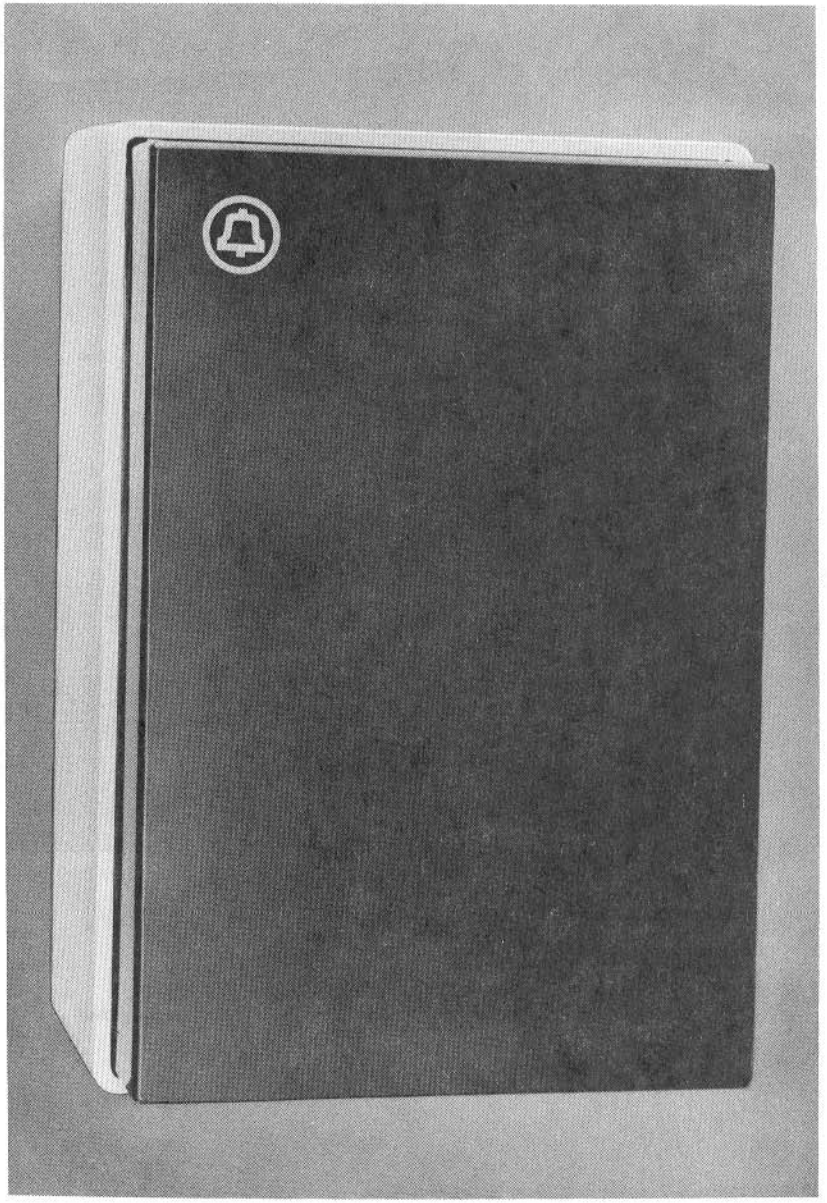

Fig. 4—161A Decorative Cover

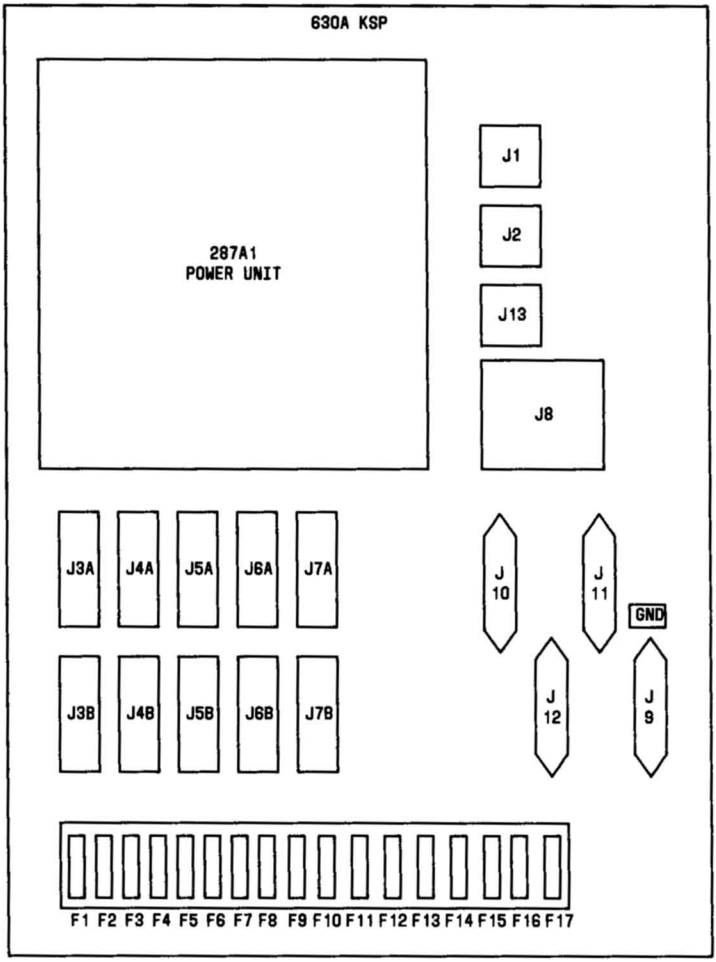

Fig. 5—630A Key Service Panel, Jack, and Fuse Block Locations

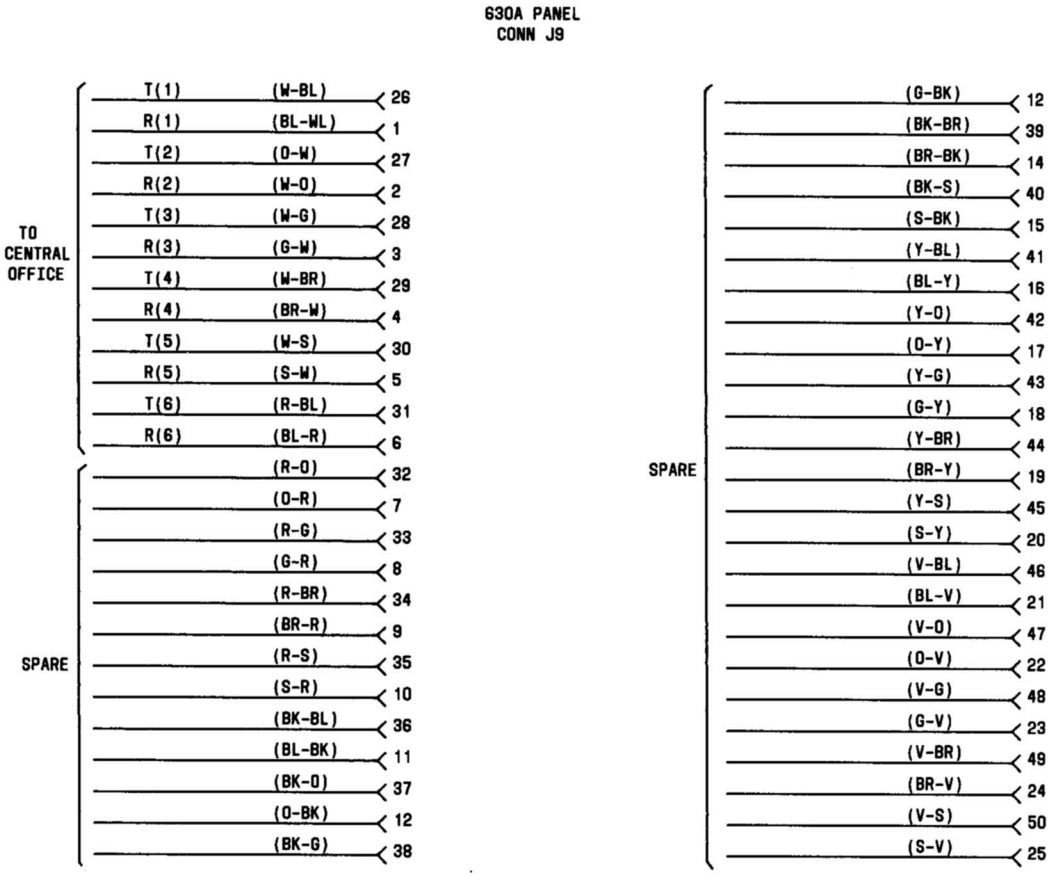

Fig. 6—630A Key Service Panel, Cable Connector Terminal Assignments (Sheet 1 of 4)

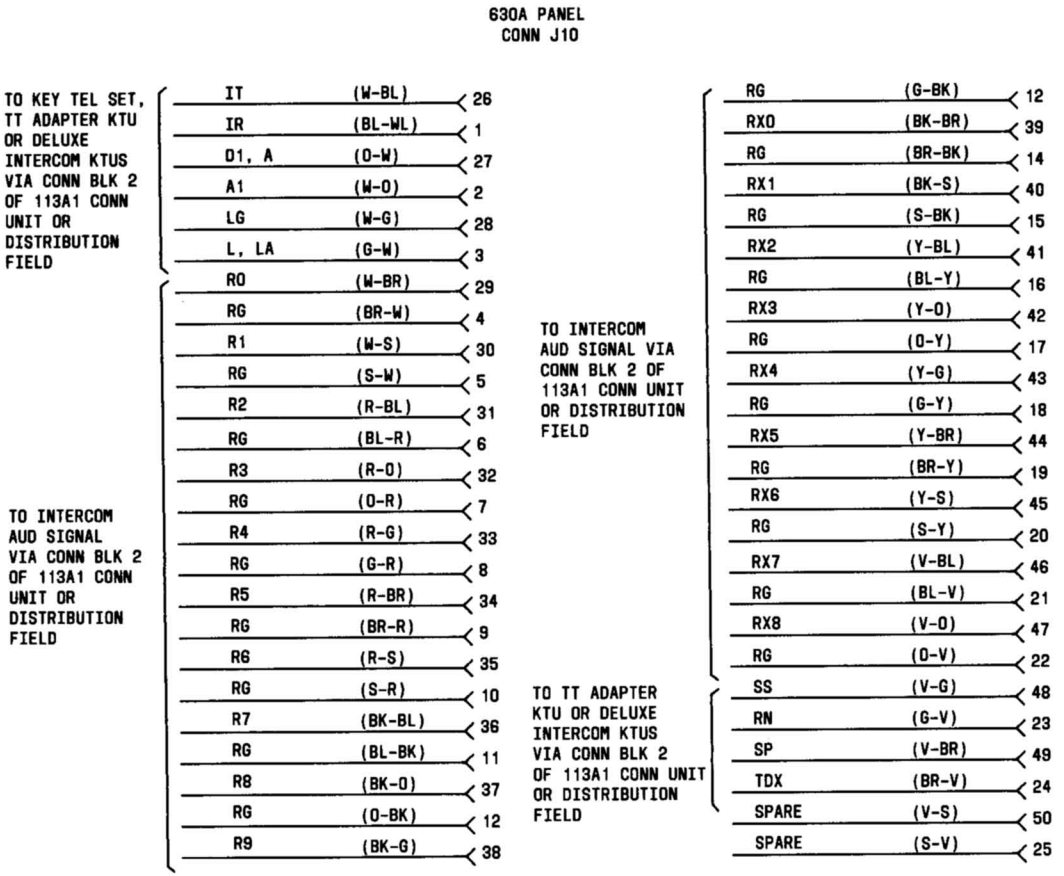

Fig. 6—630A Key Service Panel, Cable Connector Terminal Assignments (Sheet 2 of 4)

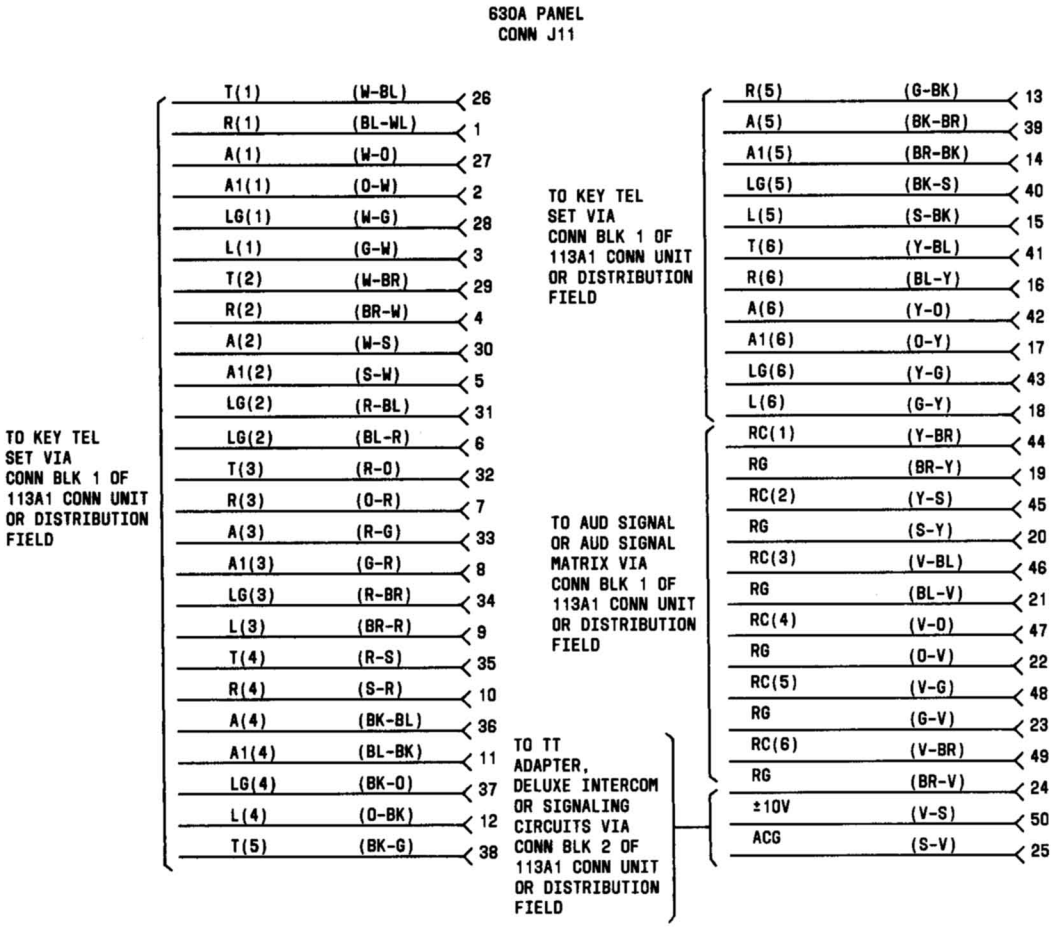

Fig. 6—630A Key Service Panel, Cable Connector Terminal Assignments (Sheet 3 of 4)

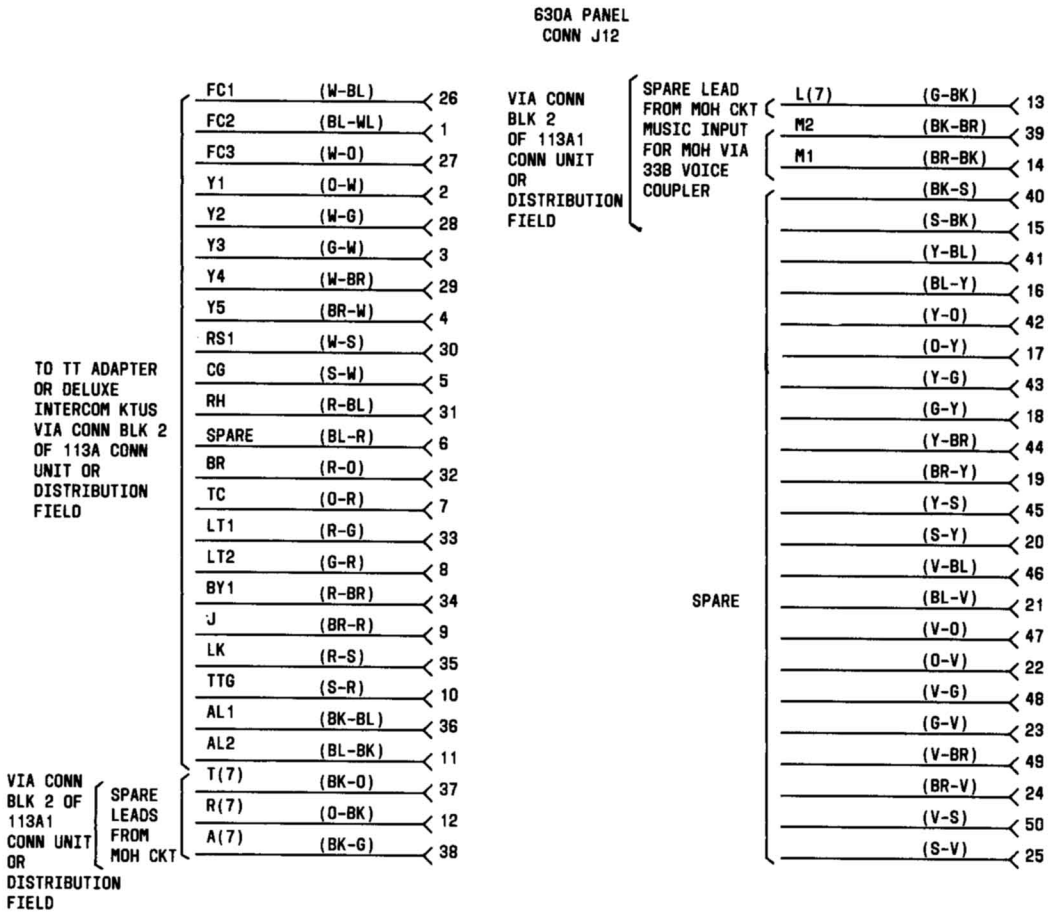

Fig. 6—630A Key Service Panel, Cable Connector Terminal Assignments (Sheet 4 of 4)

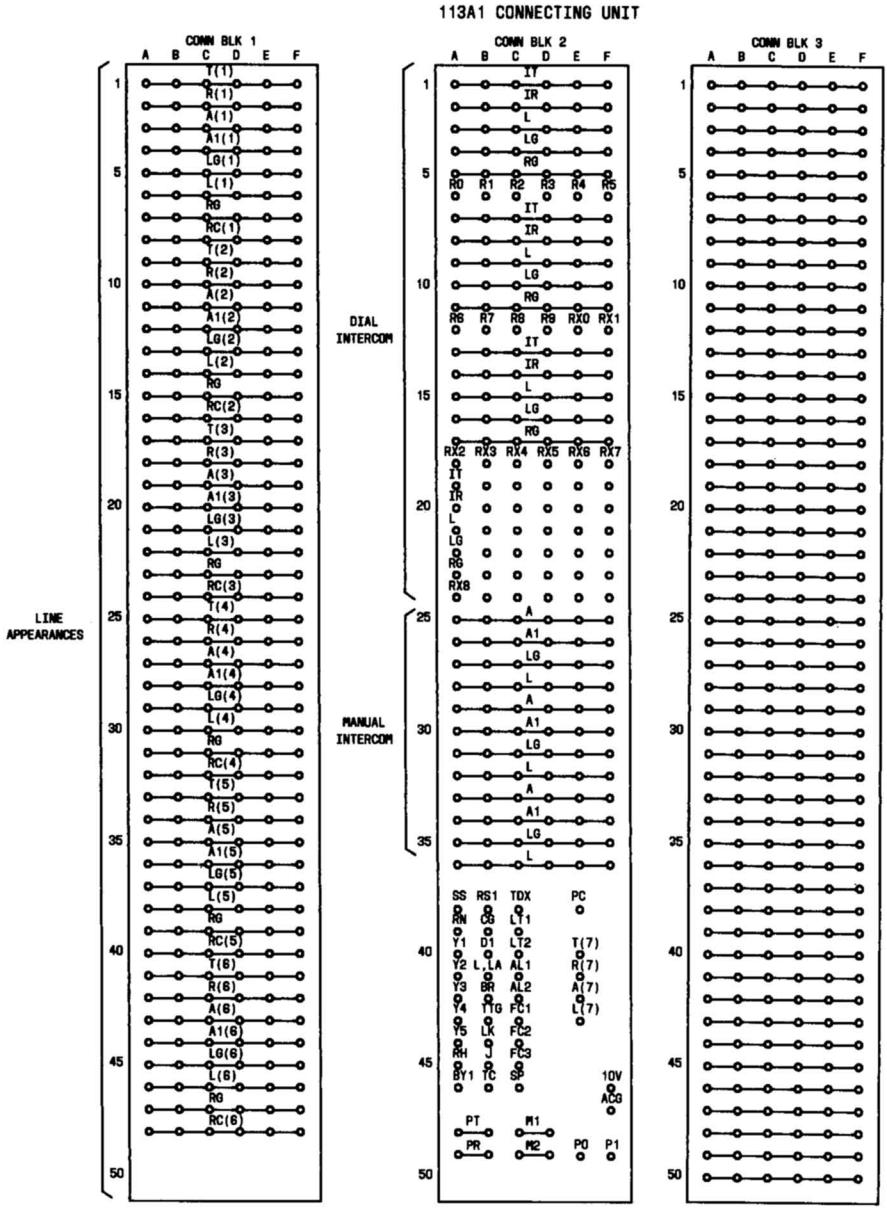

Fig. 7—113A1 Connecting Unit, Connecting Block Assignment

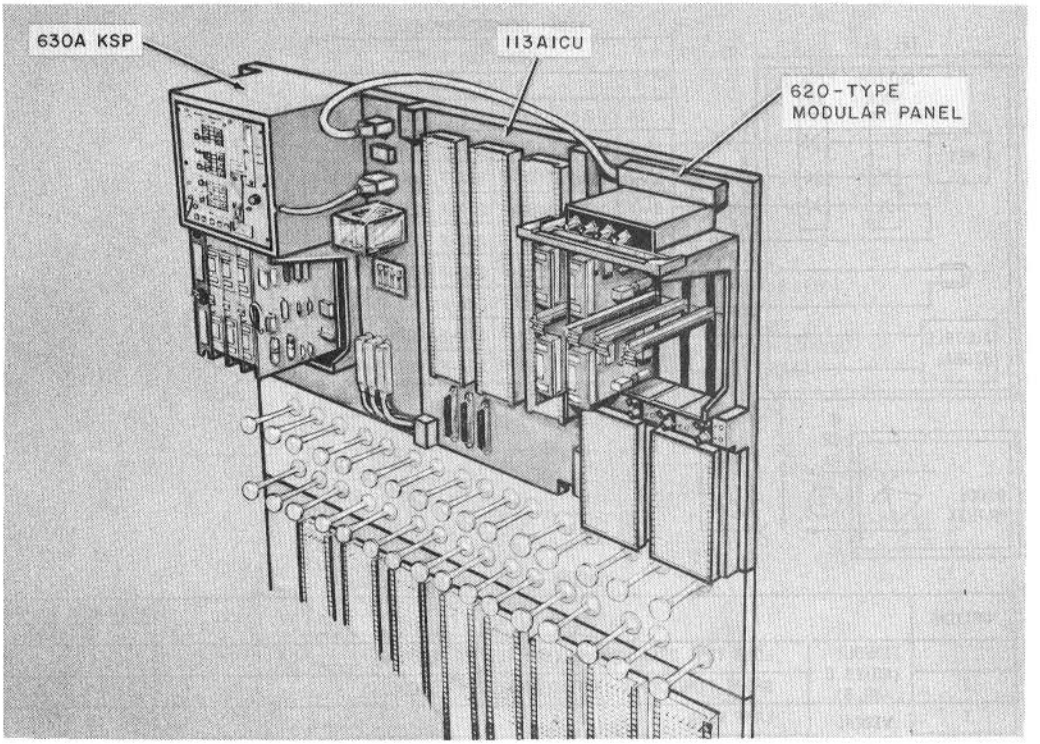

Fig. 8—Typical 630A Key Service Panel and 113A1 Connecting Unit With 620-Type Modular Panel for Large Key Telephone Installations

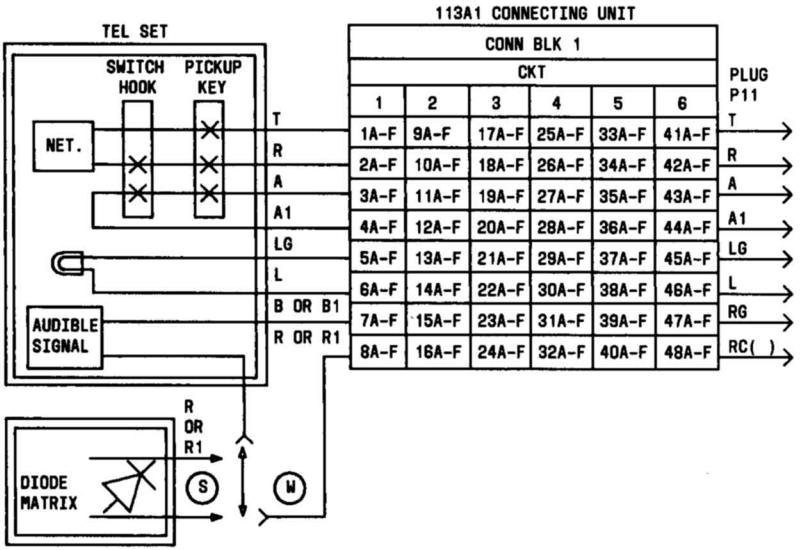

OPTION STRAPPING (SEE NOTE 1)

OPTION	FEATURES			OPTION BLOCK STRAPPING 400D(MD)
	TIMEOUT (NOTES 5 AND 6)	LONG TIME DELAY (APPROXIMATELY 30 SECONDS)		
Z		SHORT TIME DELAY (APPROXIMATELY 10 SECONDS)		1 TO 2
Y	VISUAL HOLD CKT	LAMP WINK		10 TO 7
X		LAMP STEADY		9 TO 7
W	AUDIBLE SIGNAL	INTERRUPTED RING		5 TO 8
T		STEADY RING		6 TO 8
S		COMMON WITH DIODE MATRIX CONTROL		5 TO 8
V		COMMON WITH RELAY CONTROL		4 TO 8
ZC (NOTE 2)	DELAYED HOLD RELEASE	RELEASE OF HOLDING BRIDGE FROM CO/PBX BY LINE CURRENT OPENS GREATER THAN	500 MILLISECONDS WHEN ASSOCIATED WITH ESS HAVING RESWITCH CAPABILITY * (USE 5 UF CAPACITOR, 601A, OR EQUIVALENT) †(USE 1.62 UF CAPACITOR, 701G, OR EQUIVALENT)	NOTE 6
ZJ			50 MILLISECONDS WHEN ASSOCIATED WITH NO. 5 X-BAR CENTREX HAVING AUTOMATIC PERMANENT SIGNAL RELEASE * (USE 0.5 UF CAPACITOR, 575B, OR EQUIVALENT) † (USE 0.162 UF CAPACITOR OR EQUIVALENT)	

* WHEN USED WITH Z OPTION.
† WHEN USED WITH LONG TIME DELAY.
‡ ONLY BARE WIRE STRAPS SHOULD BE USED ON KTUS MANUFACTURED PRIOR TO 1966.

NOTES:
1. THE 400D (MD) KTU IS FACTORY WIRED FOR 10-SECOND TIMEOUT, PLUS WINKING-HOLD LAMP, AND W AND S WIRING OPTIONS.
2. WHEN THE ZC OPTION IS USED DUE TO THE DELAYED RELEASE OF THE HOLDING BRIDGE, SOME TRANSMISSION LOSS IS ENCOUNTERED FOR APPROXIMATELY 1 SECOND WHEN A STATION REENTERS A HELD CALL.
3. V OPTION MAY BE USED IN LOCALLY ENGINEERED ARRANGEMENTS OR RELAY COMMON AUDIBLE ARRANGEMENTS.
4. ZD OPTION IS REPLACED BY ZJ OPTION. HOWEVER, IT IS NOT NECESSARY TO UPDATE CIRCUITS PREVIOUSLY MODIFIED WITH OPTION ZD.

Fig. 9—400D KTU (MD) Connections (CO/PBX Line) in 630A Key Service Panel and 113A1 Connecting Unit (Sheet 1 of 2)

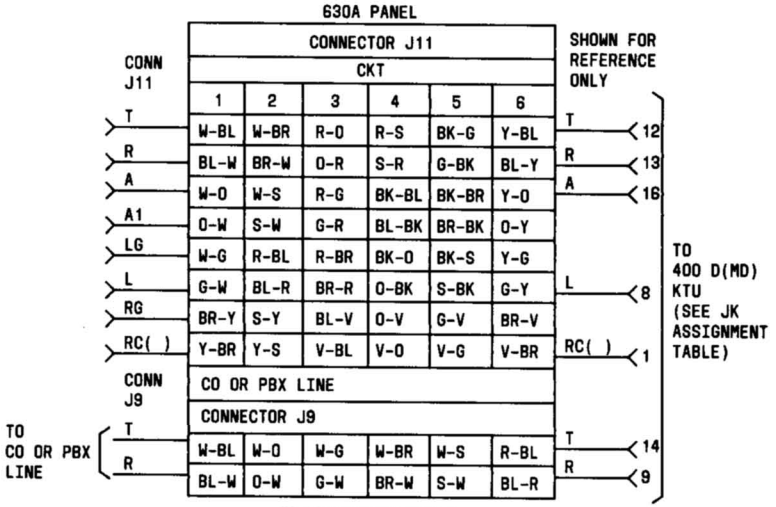

JK ASSIGNMENT TABLE

630A PANEL	
400 D(MD) TYPE KTU JK LOCATION	
CKT	JK
1	J3A
2	J3B
3	J4A
4	J4B
5	J5A
6	J5B

NOTES (CONT)

5. FOR 30 SECOND TIME-OUT CYCLE, REMOVE Z OPTION STRAP BETWEEN TERMINALS 1 AND 2.
6. TO PROVIDE TIME-OUT CYCLES OF RING-UP CIRCUITS FROM 3.4 TO 7.5 SECONDS, REPLACE Z OPTION STRAP WITH A KS-13490,L1 OR EQUIVALENT (1/2 WATT) RESISTOR. USE ONE RESISTOR LEAD AS A STRAP BETWEEN TERMINALS 1 AND 2 AND CONNECT THE OTHER LEAD TO TERMINAL 3. USE TABLE BELOW FOR RESISTOR VALUE REQUIRED FOR DESIRED TIME-OUT INTERVAL.

TIME IN SEC FROM 10 SEC TO:	RESISTOR MEGOHM	EFFECT ON DELAYED HOLD RELEASE OPTIONS	
		ZC	ZJ
7.5	1.2	NONE	NONE
6.7	.75	NOT RECOMMENDED (NOTE 5)	
5.0	.39		
3.4	.20		

IF THE TIME-OUT CYCLE IS REDUCED IN CONJUNCTION WITH ZC OR ZJ OPTION, CONNECT THE RESISTOR AND CAPACITOR AS SHOWN BELOW:

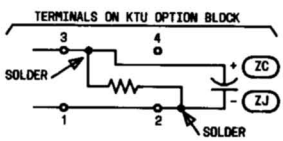

IF TIME-OUT CYCLE IS REDUCED, CONNECT RESISTOR AS SHOWN BELOW:

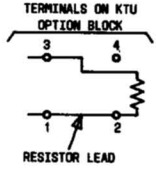

7. NO. 1 ESS SPECIAL LINE APPLIQUE CIRCUIT (SD-1A297) SHOULD BE USED IN APPLICATIONS WHERE ZC OPTION CANNOT BE APPLIED.
8. WHEN Z OPTION IS PROVIDED WITH ZC OR ZJ OPTIONS, REMOVE THE Z STRAP AND USE THE CAPACITOR LEAD AS A STRAP BETWEEN TERMINALS 1 AND 2.

Fig. 9—400D KTU (MD) Connections (CO/PBX Line) in 630A Key Service Panel and 113A1 Connecting Unit (Sheet 2 of 2)

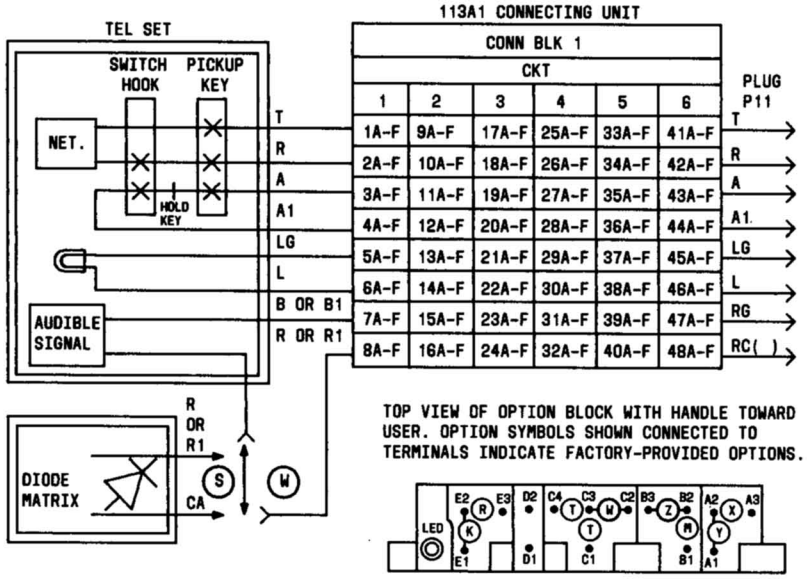

OPTION		FEATURE		CONNECT TERMINALS
M	RING TIMEOUT	LONG TIME DELAY (APPROXIMATELY 20 SECONDS)		B1-B2
Z		SHORT TIME DELAY (APPROXIMATELY 5.75 SECONDS)		B2-B3‡
Y	VISUAL HOLD CKT	LAMP WINK		A1-A2‡
X		LAMP STEADY		A2-A3
W	AUDIBLE SIGNAL	INTERRUPTED RING		C2-C3‡
T		STEADY RING		C3-C4
S		COMMON WITH DIODE MATRIX CONTROL		C1-C3
V		COMMON WITH RELAY CONTROL		C1-C3
R	DELAYED HOLD RELEASE	RELEASE OF HOLDING BRIDGE FROM CO/PBX BY LINE CURRENT OPENS	MINIMUM OF 25 MS	E2-E3
K			600 MS	E1-E2

‡ DENOTES FACTORY-PROVIDED OPTIONS.

Fig. 10—400G KTU (MD) Connections (CO/BPX Line) in 630A Key Service Panel and 113A1 Connecting Unit (Sheet 1 of 2)

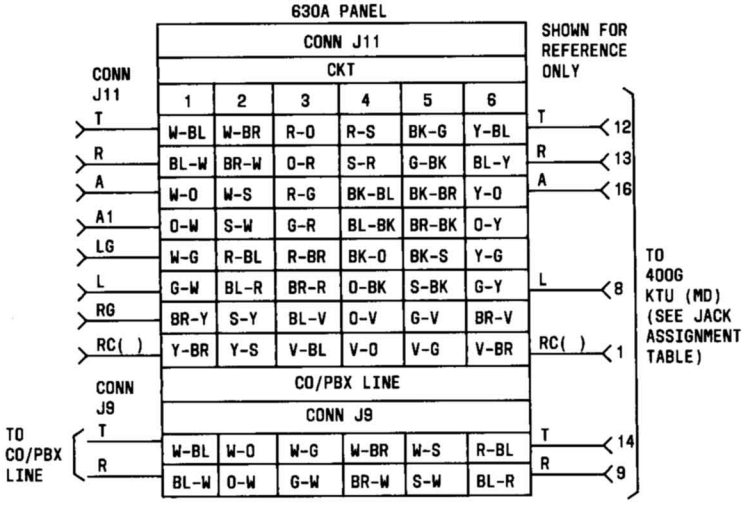

JACK ASSIGNMENT TABLE

630A PANEL	
400G KTU (MD) JACK LOCATION	
CKT	JACK
1	J3A
2	J3B
3	J4A
4	J4B
5	J5A
6	J5B

Fig. 10—400G KTU (MD) Connections (CO/PBX Line) in 630A Key Service Panel and 113A1 Connecting Unit (Sheet 2 of 2)

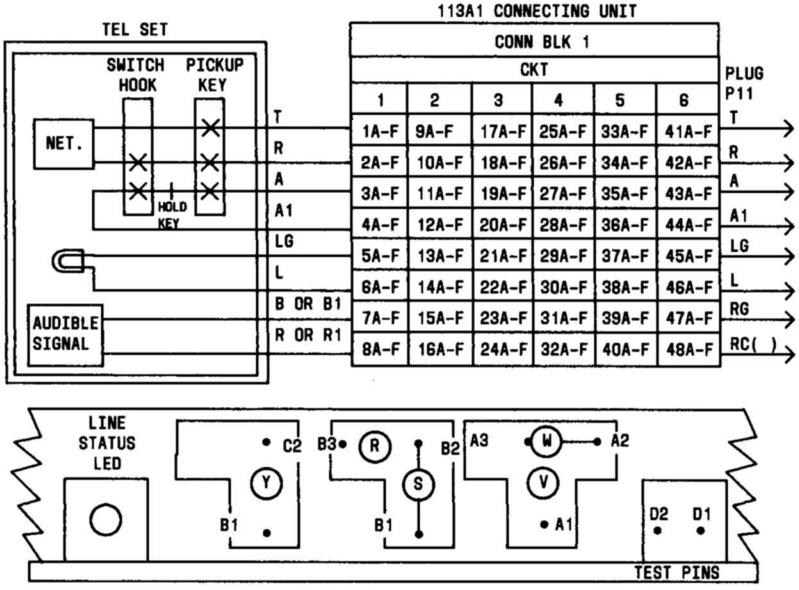

TOP VIEW OF OPTION BLOCK-HANDLE ASSEMBLY.
OPTION SYMBOLS SHOWN CONNECTED ARE IN FACTORY-INSTALLED POSITIONS.

OPTIONS

OPT	FEATURES		
T*‡	CO OR PBX LINE CIRCUIT		
W*	AUDIBLE SIGNAL	INTERRUPTED RING	
V		COMMON AUDIBLE WITH GROUND FOR RELAY CONTROL	
S*	HOLD CIRCUIT RELEASE	LONG HOLD ABANDON TIMEOUT (FOR ESS #1, ESS #2, 812 PBX, 770 PBX, DIMENSION PBX)	
R		SHORT HOLD ABANDON (FOR ALL OTHERS)	
Y †	TIMEOUT	WITH	14 SECONDS
		WITHOUT	6 SECONDS

* FACTORY INSTALLED.

† AN OPTION PLUG IS NOT PROVIDED. USE KS21290L7 OPTION PLUG COMCODE 841732613.

‡ T OPTION ISSUE 1 ONLY

Fig. 11—400H KTU Connections (CO/PBX Line) in 630A Key Service Panel and 113A1 Connecting Unit (Sheet 1 of 2)

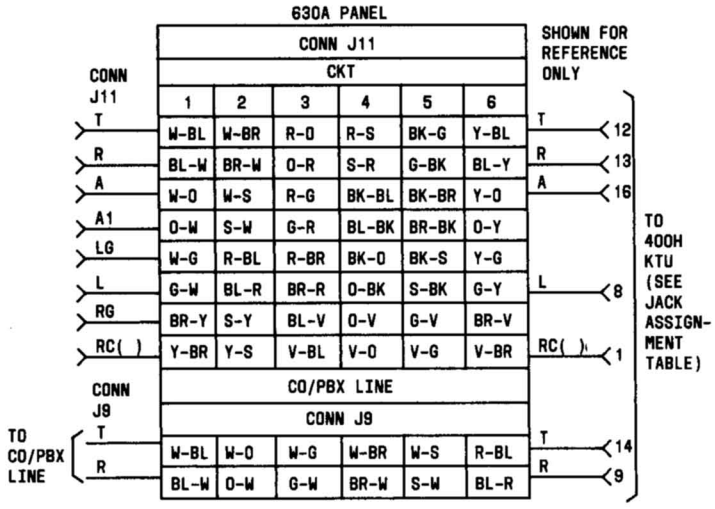

JACK ASSIGNMENT TABLE

630A PANEL	
400H KTU JACK LOCATION	
CKT	JACK
1	J3A
2	J3B
3	J4A
4	J4B
5	J5A
6	J5B

Fig. 11—400H KTU Connections (CO/PBX Line) in 630A Key Service Panel and 113A1 Connecting Unit (Sheet 2 of 2)

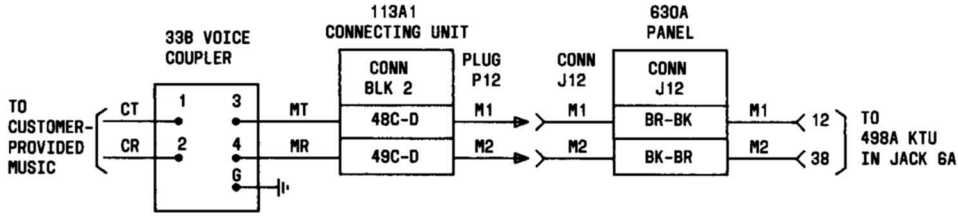

NOTE:
498A KTU CONTAINS 4 CKTS AND MUST BE EXPANDED TO 6 CKTS WITH THE ADDITION OF AN 116A1 CKT MODULE TO THE 498A KTU WHEN MORE THAN FOUR CO/PBX LINES ARE TO BE EQUIPPED WITH MUSIC-ON-HOLD.

Fig. 12—498A KTU Connections (Music-On-Hold) in 630A Key Service Panel and 113A1 Connecting Unit

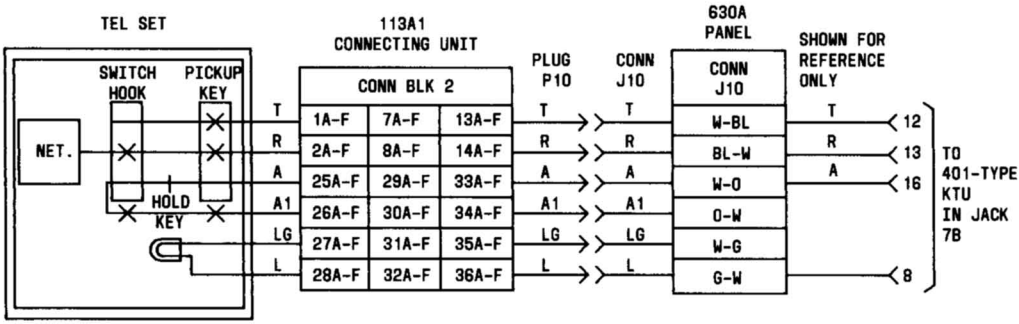

Fig. 13—401-Type KTU Connections (Manual Intercom) in 630A Key Service Panel and 113A1 Connecting Unit

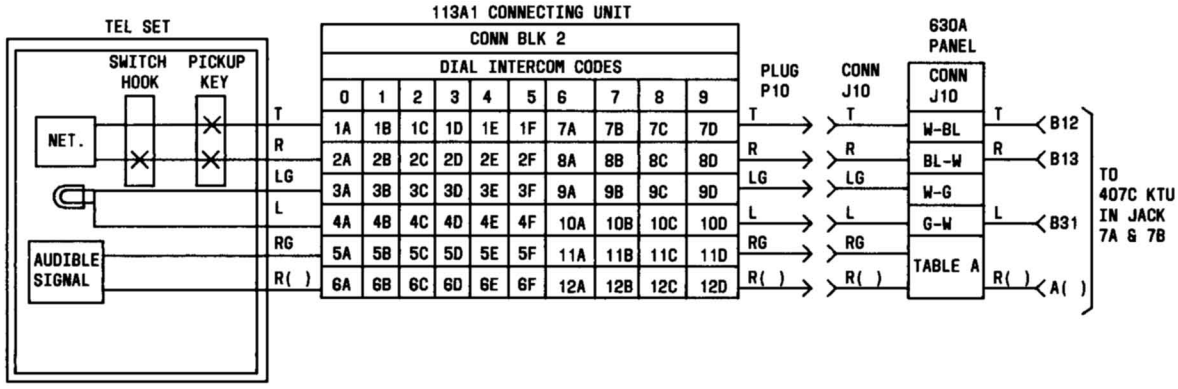

TABLE A

DIAL CODE	COLOR		TERMINAL
	R( )	RG	R( )
R0	W-BR	BR-W	A34
R1	W-S	S-W	A28
R2	R-BL	BL-R	A23
R3	R-O	O-R	A25
R4	R-G	G-R	A26
R5	R-BR	BR-R	A20
R6	R-S	S-R	A21
R7	BK-BL	BL-BK	A32
R8	BK-O	O-BK	A30
R9	BK-G	G-BK	A29

Fig. 14—470C KTU Connections (Dial Intercom, 10-Code Selector) in 630A Key Service Panel and 113A1 Connecting Unit

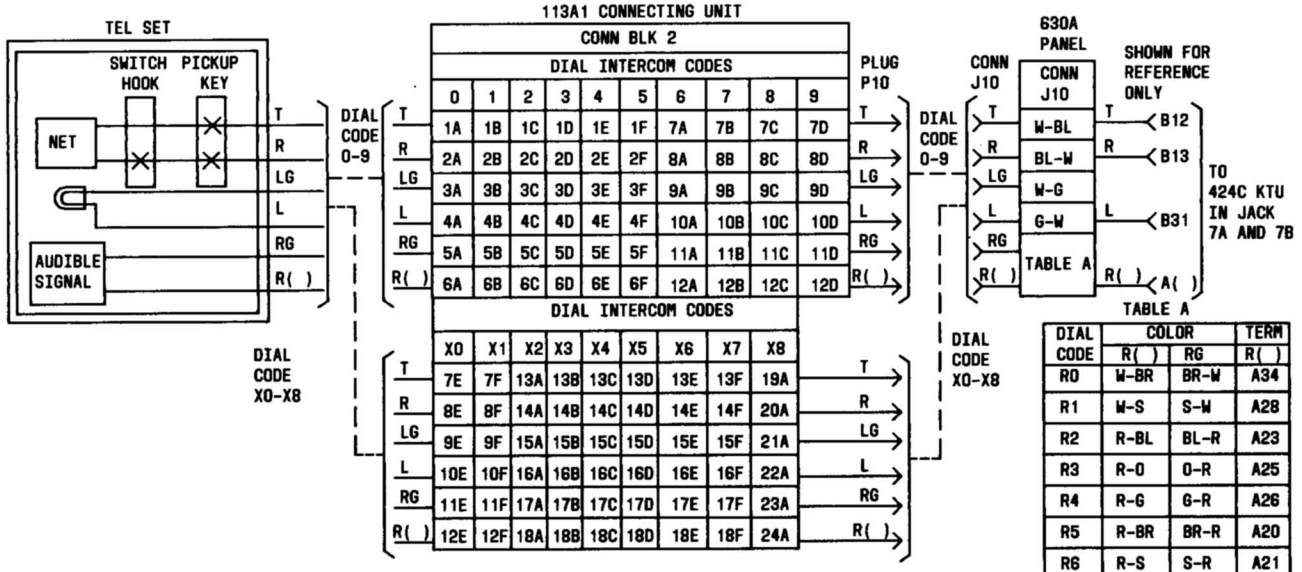

NOTES:

1. ANY SELECTED R LEAD (R0-R9) MAY BE ASSIGNED AS THE INITIAL DIGIT OF A 2-DIGIT CODE. THE R LEAD SO ASSIGNED MAY NOT BE USED FOR A STATION CODE. STRAP 38C (TDX TERM.) OF CONN BLK 2 TO R( ) TERM. OF DESIRED DIGIT.
2. DIAL CODE RX9 IS INTERNALLY WIRED FOR THE DIAL PAGING ACCESS CODE AND DOES NOT APPEAR ON THE CONNECTING BLOCK.

TABLE A

DIAL CODE	COLOR		TERM
	R( )	RG	R( )
R0	W-BR	BR-W	A34
R1	W-S	S-W	A28
R2	R-BL	BL-R	A23
R3	R-O	O-R	A25
R4	R-G	G-R	A26
R5	R-BR	BR-R	A20
R6	R-S	S-R	A21
R7	BK-BL	BL-BK	A32
R8	BK-O	O-BK	A30
R9	BK-G	G-BK	A29
RX0	BK-BR	BR-BK	A14
RX1	BK-S	S-BK	A8
RX2	Y-BL	BL-Y	A22
RX3	Y-O	O-Y	A24
RX4	Y-G	G-Y	A27
RX5	Y-BR	BR-Y	A0
RX6	Y-S	S-Y	A1
RX7	V-BL	BL-V	A33
RX8	V-O	O-V	A31

Fig. 15—424C KTU Connections (Dial Intercom, 19-Code Selector) in 630A Key Service Panel and 113A1 Connecting Unit

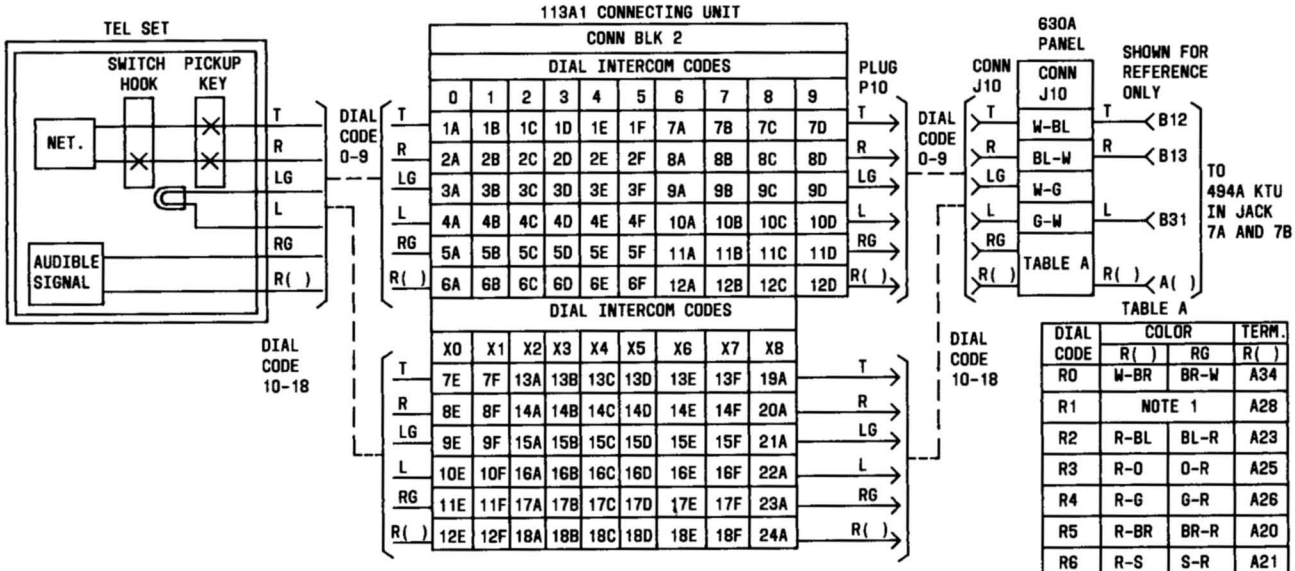

TABLE A

DIAL CODE	COLOR		TERM.
	R( )	RG	R( )
R0	W-BR	BR-W	A34
R1	NOTE 1		A28
R2	R-BL	BL-R	A23
R3	R-O	O-R	A25
R4	R-G	G-R	A26
R5	R-BR	BR-R	A20
R6	R-S	S-R	A21
R7	BK-BL	BL-BK	A32
R8	BK-O	O-BK	A30
R9	BK-G	G-BK	A29
R10	BK-BR	BR-BK	A14
R11	BK-S	S-BK	A8
R12	Y-BL	BL-Y	A22
R13	Y-O	O-Y	A24
R14	Y-G	G-Y	A27
R15	Y-BR	BR-Y	A0
R16	Y-S	S-Y	A1
R17	V-BL	BL-V	A33
R18	V-O	O-V	A31

NOTES:
1. R1 IS ASSIGNED AS THE INITIAL DIGIT OF A 2-DIGIT CODE. THEREFORE, IT CANNOT BE ASSIGNED AS A STATION CODE.
2. DIAL CODE R19 IS INTERNALLY WIRED FOR THE DIAL PAGING ACCESS CODE AND DOES NOT APPEAR ON THE CONNECTING BLOCK.

Fig. 16—494A KTU Connections (TOUCH-TONE Adapter, 19-Code Selector) in 630A Key Service Panel and 113A1 Connecting Unit

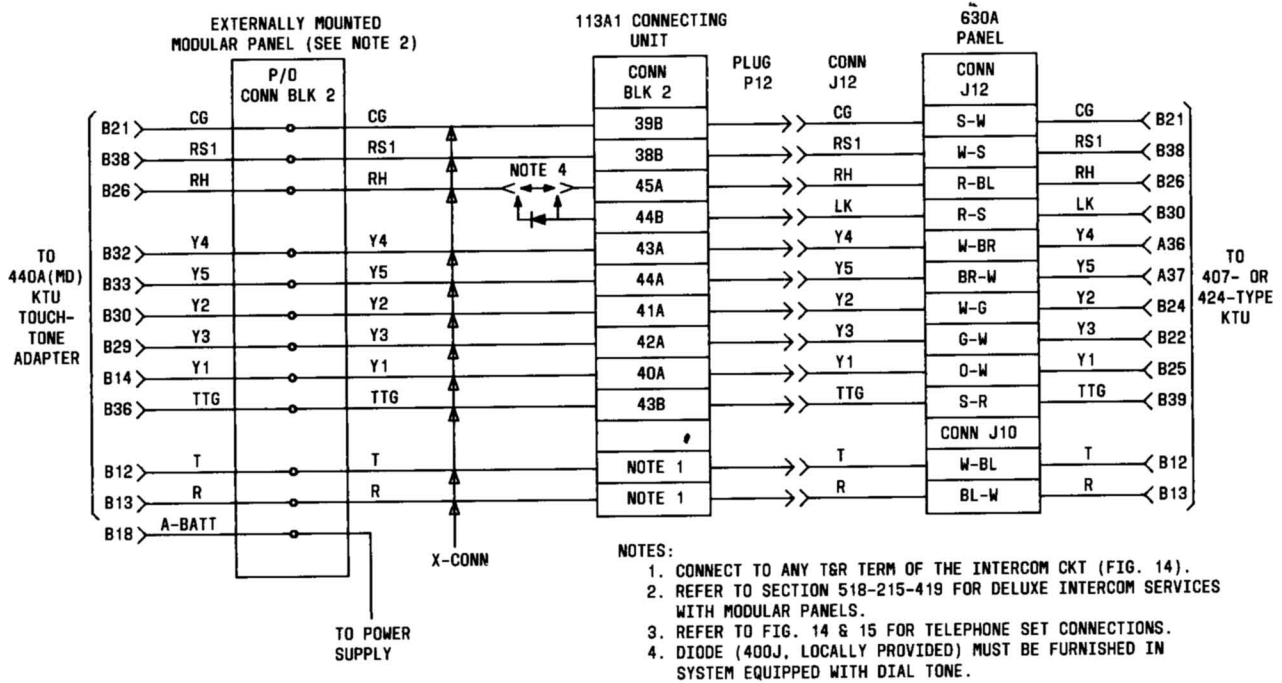

NOTES:
1. CONNECT TO ANY T&R TERM OF THE INTERCOM CKT (FIG. 14).
2. REFER TO SECTION 518-215-419 FOR DELUXE INTERCOM SERVICES WITH MODULAR PANELS.
3. REFER TO FIG. 14 & 15 FOR TELEPHONE SET CONNECTIONS.
4. DIODE (400J, LOCALLY PROVIDED) MUST BE FURNISHED IN SYSTEM EQUIPPED WITH DIAL TONE.

Fig. 17—407- or 424-Type KTU (Rotary Selector) Connections in 630A Key Service Panel and 113A1 Connecting Unit Wired to Externally Mounted 440A KTU (MD) (TOUCH-TONE Adapter)

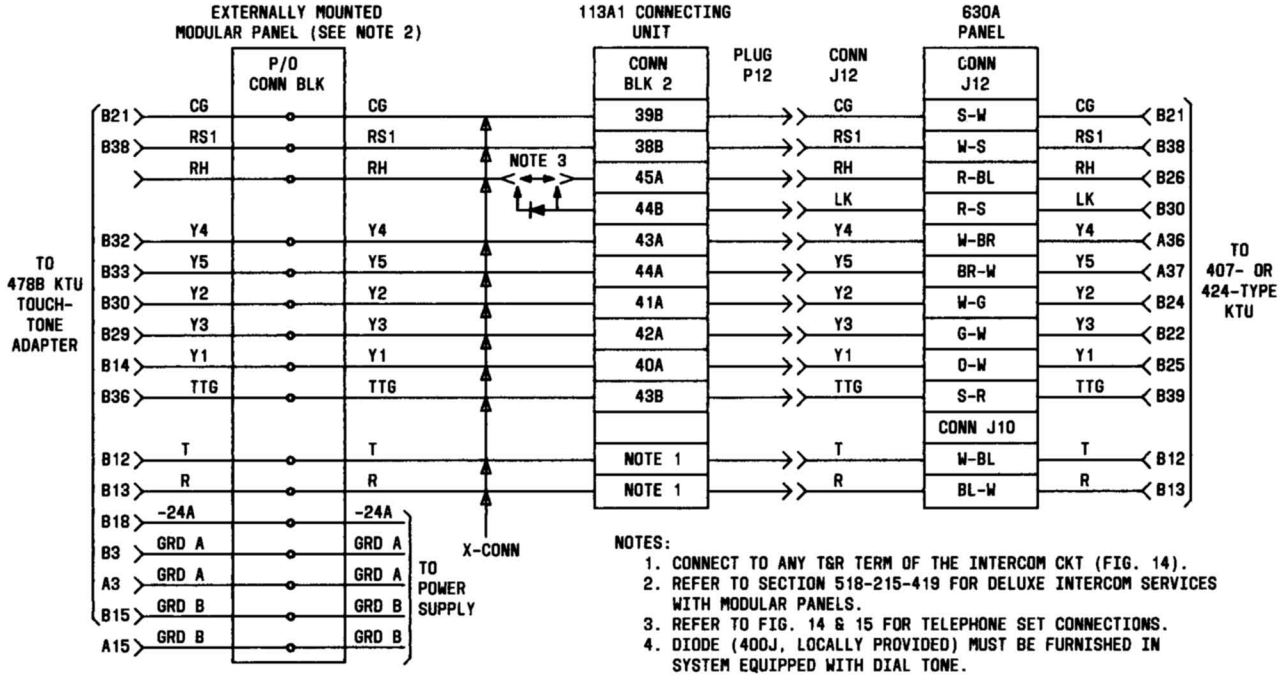

NOTES:

1. CONNECT TO ANY T&R TERM OF THE INTERCOM CKT (FIG. 14).
2. REFER TO SECTION 518-215-419 FOR DELUXE INTERCOM SERVICES WITH MODULAR PANELS.
3. REFER TO FIG. 14 & 15 FOR TELEPHONE SET CONNECTIONS.
4. DIODE (400J, LOCALLY PROVIDED) MUST BE FURNISHED IN SYSTEM EQUIPPED WITH DIAL TONE.

Fig. 18—407- or 424-Type ((Rotary Selector) Connections in 630A Key Service Panel and 113A1 Connecting Unit Wired to Externally Mounted 478B KTU (TOUCH-TONE Adapter)

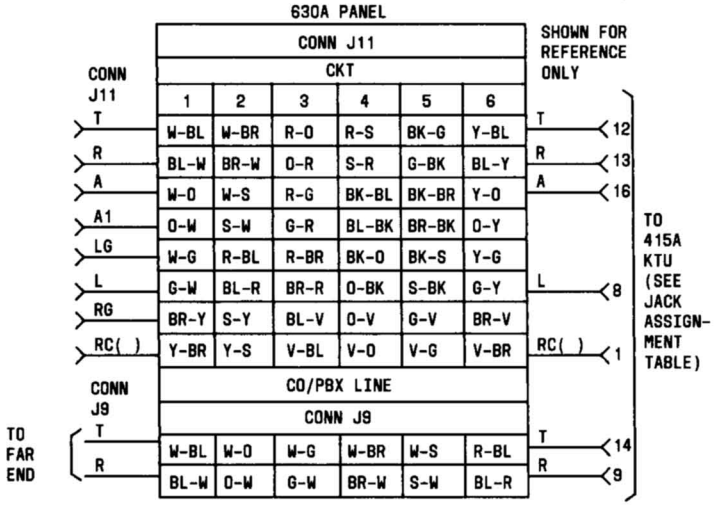

JACK ASSIGNMENT TABLE

630A PANEL	
415A KTU JACK LOCATION	
CKT	JACK
1	J3A
2	J3B
3	J4A
4	J4B
5	J5A
6	J5B

Fig. 19—415A KTU Connections (Automatic, DC Signaling, Private Line) in 630A Key Service Panel and 113A1 Connecting Unit (Sheet 1 of 2)

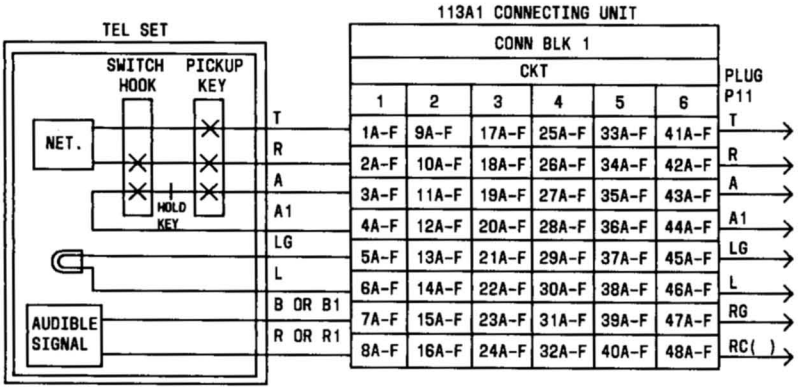

NOTES:
1. REFER TO SECTION 518-215-400 FOR ADDITIONAL INFORMATION ON THE 415A KTU.
2. SEE NOTE 1 IN TABLE A FOR RESTRICTIONS ON MUSIC-ON-HOLD FOR CO LINES WHEN THE 415A KTU IS USED

Fig. 19—415A KTU Connections (Automatic, DC Signaling, Private Line) in 630A Key Service Panel and 113A1 Connecting Unit (Sheet 2 of 2)

259-TYPE KEY TELEPHONE UNIT

IDENTIFICATION

1. GENERAL

1.01 This section is reissued to revise Fig. 1 to show 259B KTU not MD.

1.02 This issue of the section is based on the following drawing:

- SD-69288-01 Issue 18D

If this section is to be used with equipment or apparatus reflecting a later issue of the drawing, reference should be made to the SD and CD to determine the extent of the changes and the manner in which the section may be affected.

2. IDENTIFICATION

(a) ***Purpose:*** To provide a means for mounting and connecting a maximum of two, 4-inch 18- and 20-contact plug-in, 400 series KTUs.

(b) ***Application:*** To provide a standard 7-inch mounting facility for one or two 400-series KTUs, having no more than 20 contacts.

Note: For connection information refer to the appropriate 400 series KTU section, and compare the land contacts to the pin and terminal assignments of the 259-type KTU.

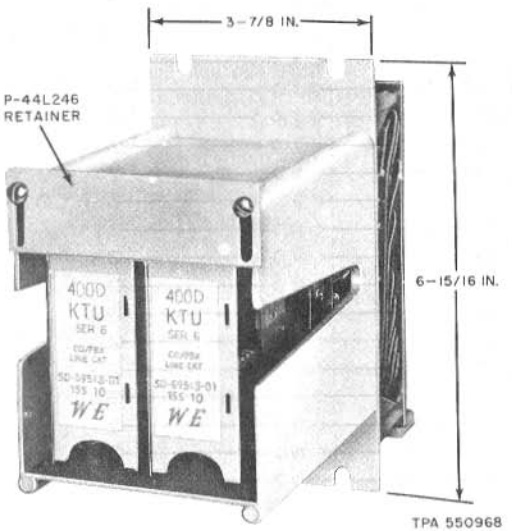

FRONT VIEW

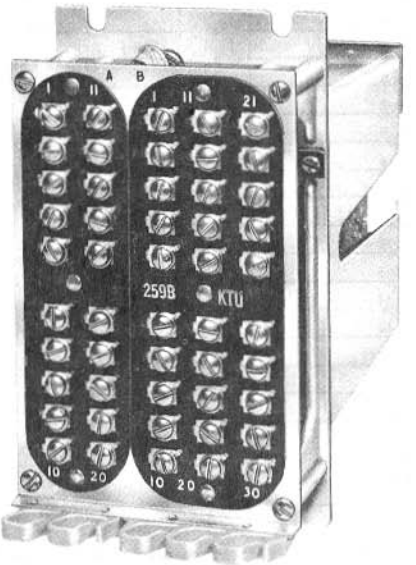

REAR VIEW

Fig. 1—259B KTU

© American Telephone and Telegraph Company, 1972
Printed in U.S.A.

(c) *Design Features:*

259A KTU (MD) Fig. 2

- Two 906C (18-pin) connectors, A and B, mounted on front panel
- Each connector wired to a 20 screw-type terminal field, A and B on back panel
- Terminals 19 and 20 of terminal strips A and B are vacant and may be used to terminate miscellaneous circuits
- Front panel equipped with a P-48C917 retainer for locking the 400 series KTUs in place.

259B KTU (Fig. 3)

- Two 913A (20-pin) connectors, A and B, mounted on the front panel
- Each connector wired to a terminal field, A and B, on back panel.
- Terminals 21 through 30 of terminal strip B are vacant and may be used to terminate miscellaneous circuits
- Front panel equipped with a P-44L246 retainer for locking the 400 series KTUs in place.

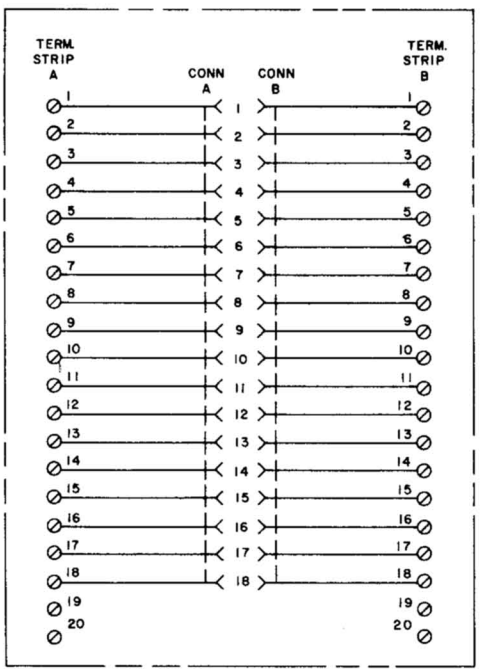

Fig. 2—259A KTU (MD) Schematic, Arrangement of Screw Terminals

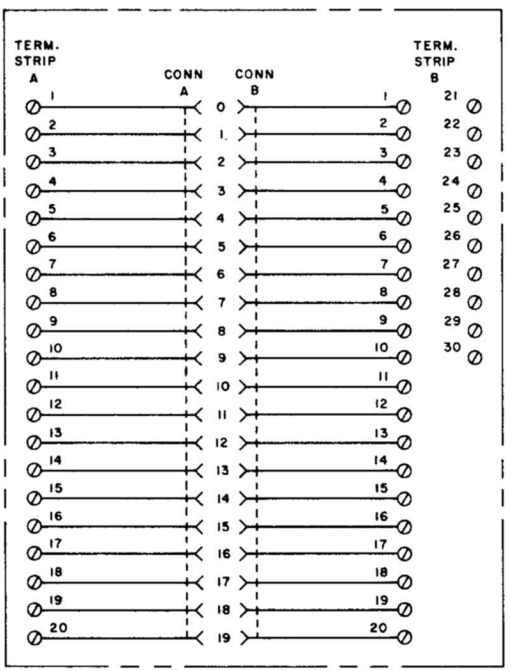

Fig. 3—259B KTU Schematic, Arrangement of Screw Terminals

272A KEY TELEPHONE UNIT

IDENTIFICATION

1. IDENTIFICATION

(a) ***Purpose:*** To provide an auxiliary mounting for any one 4-inch, 400-series key telephone unit (KTU).

(b) ***Application:*** 1A2 Key Telephone System.

Note: For connection information refer to Section 518-215-400 to determine pin numbers used for a particular KTU and make connections to corresponding terminals of the 272A KTU.

(c) ***Ordering Guide***

- Unit, Telephone, Key, 272A (Fig. 1)

(d) ***Design Features***

- Screw type terminals mounted on two terminal strips designated A and B.
- Equipped with one 914A (40-pin) connector (Fig. 2) which is factory-wired to the terminals (Fig. 3) on a terminal per pin basis.
- Front panel equipped with a retainer for locking KTUs in place.
- Terminals 21 through 30 of terminal strip B are vacant and may be used for miscellaneous connections.
- Mounts in standard equipment cabinets and apparatus mountings.

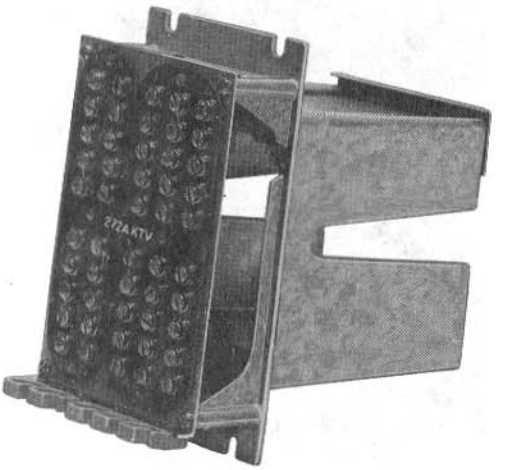

Fig. 1—272A KTU, Rear View

© American Telephone and Telegraph Company, 1973
Printed in U.S.A.

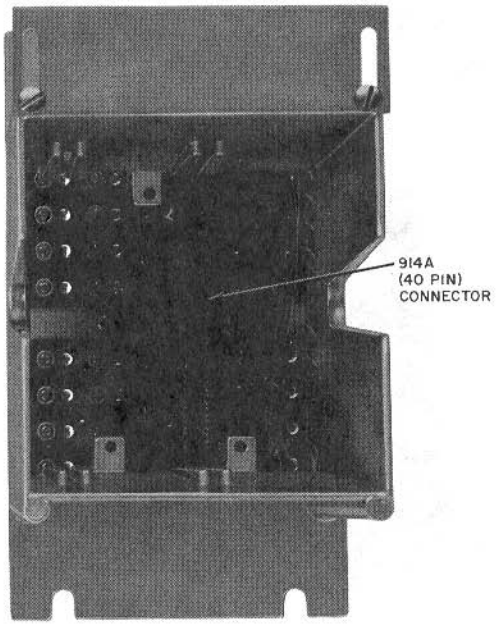

Fig. 2—272A KTU, Front View

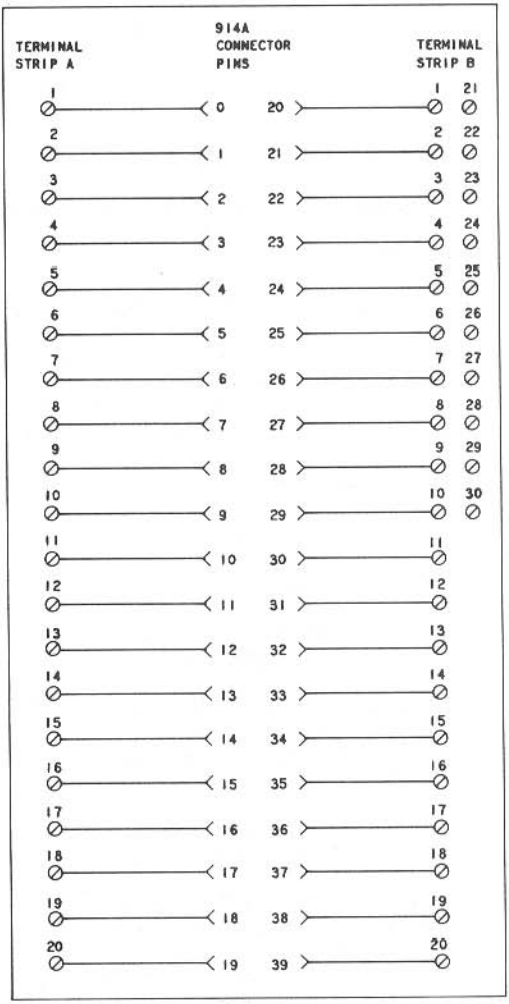

Fig. 3—272A KTU, Schematic and Arrangement of Screw Terminals

227A (MD) AND 227B KEY TELEPHONE UNITS

AUDIBLE AND VISUAL SIGNALING

IDENTIFICATION AND CONNECTIONS

1. GENERAL

1.01 This section is reissued to:

- Include the 227B KTU.
- Rate the 227A KTU Manufacture Discontinued.

1.02 Since this reissue covers a general revision, arrows ordinarily used to indicate changes have been omitted.

2. IDENTIFICATION

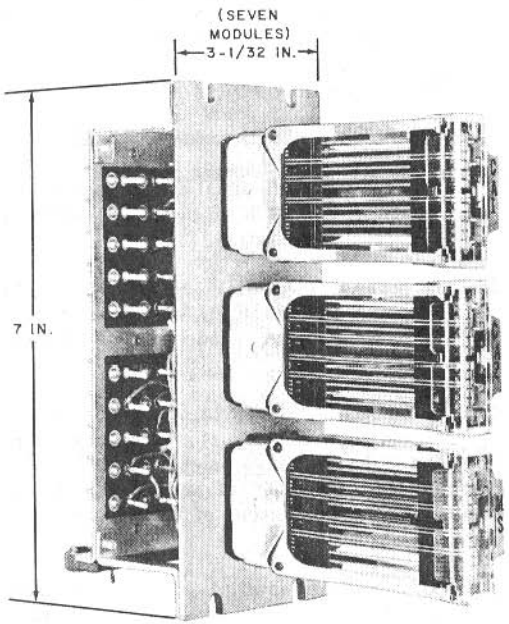

Fig. 1 — 227A (MD) and 227B KTU (Front View)

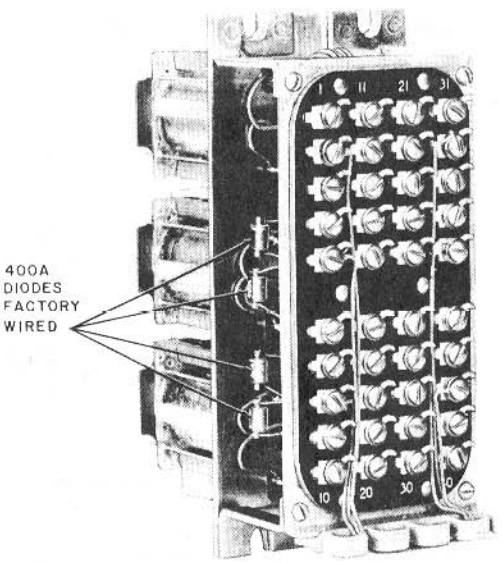

Fig. 2 — 227A (MD) and 227B KTU (Rear View)

© American Telephone and Telegraph Company, 1967
Printed in U.S.A.

3. PURPOSE

3.01 To serve as a visual and audible signaling control, and switching relay for key telephone systems.

4. DESIGN FEATURES

(a) Operates on 14 to 26 volts dc.

(b) 227B KTU — all wire spring relay contacts factory-connected to screw terminals on back panel.

(c) 227B KTU — (CA1) and (CA2) relay windings are not commonly strapped within the unit as in the 227A KTU (MD).

(d) Four 400A diodes factory-wired to provide four CA1 leads.

5. APPLICATION

- 1A, 1A1, 1A2, and 6A key telephone systems.
- 2A communication system.
- Key equipment No. 101A or 101B.

6. CONNECTION INDEX

Fig. 3 — 227A (MD) or 227B KTU — Auxiliary Lamp Relay Circuit.

- Used when additional lamps over the maximum permitted for a given circuit are required.

Fig. 4 — 227A (MD) or 227B KTU — Multisignal Control Circuit for Buzzers, Bells, or Ringers.
Provides for:

- Using the same audible signal as a line signal and common signal.
- Associating a common audible signal with one or more groups of line or signal circuits.
- Operating one or more audible signals from one line or signal circuit.
- Operating two or more signals which require different operating voltages.

Fig. 5 — 227A (MD) or 227B KTU — Multisignal Control for Ringers.

- A power failure feature is provided by having the common or line signals, with capacitors, connected to the tip and ring of CO, PBX or private line while relays are unoperated.

Fig. 6 — 227A (MD) or 227B KTU — Common Audible or Station Audible for 6A Key Telephone System.

Fig. 7 — 227A (MD) or 227B KTU — Multisignal Control Circuit for Ringers Arranged for Combination of Audible Signal and Visual Signal.

Fig. 8 — 227A (MD) or 227B KTU — Multisignal Control Circuit for Buzzers or Bells Arranged for Combination of Audible Signal with Visual Signal.

Fig. 7 and 8 provide for:

- Audible signal with locked-in visual signal.
- Locked-in visual signal can be released by manual operation of a SHUNT-DOWN key at called station.

Fig. 9 — 227A KTU (MD) or 227B KTU with 228A or 265A KTU — Method of Connecting 400A Diodes for Additional CA1 Leads.

6.01 Connect CA1 leads through 400A diodes when an audible signal is common to more than one group of line or signal circuits. This prevents false operation of audible signals not common to the same group of line or signal circuits.

6.02 CA leads may multiple to other CA leads, and CA1 leads may multiple to other CA1 leads if they are common to the same line or signal circuit.

6.03 For additional information refer to SD-69294-01.

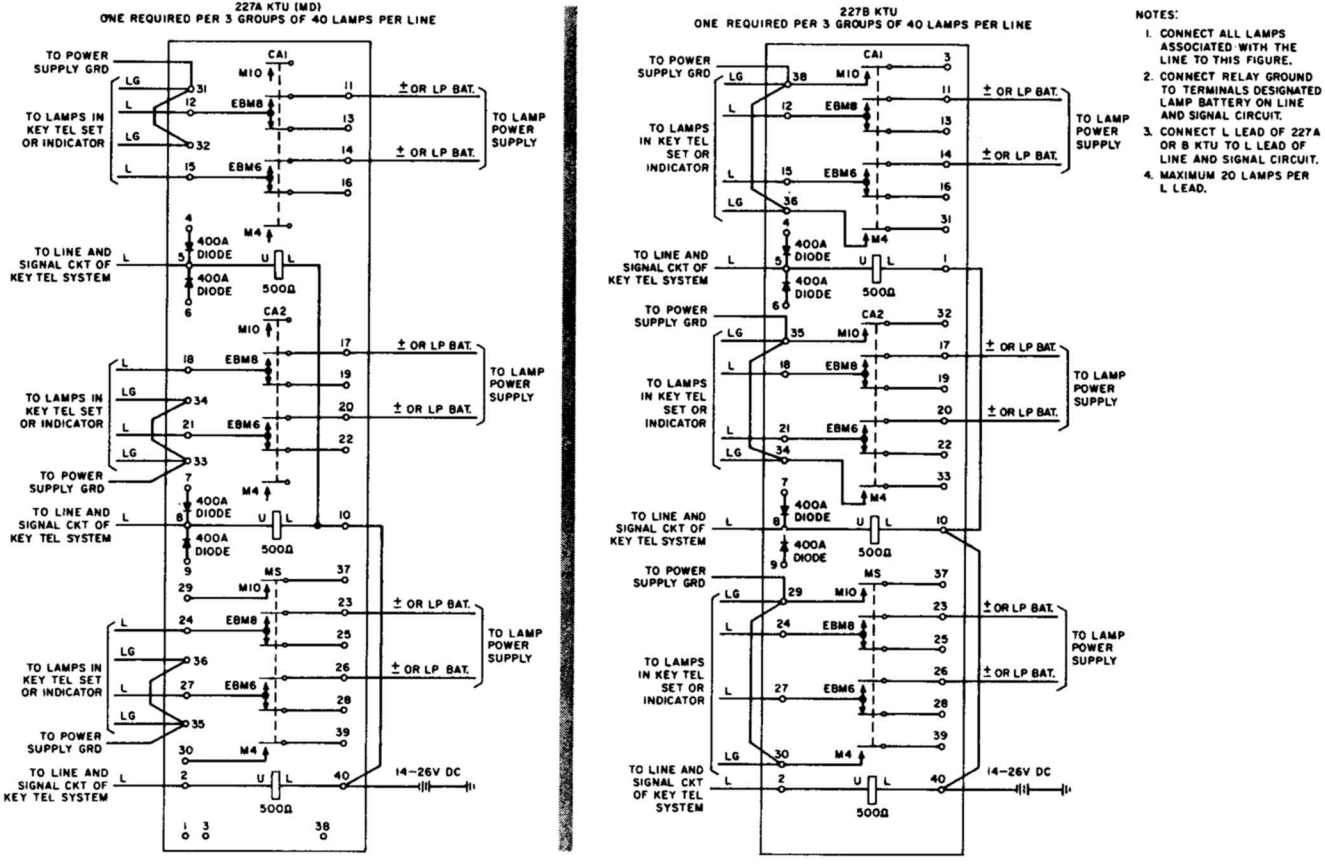

Fig. 3 — 227A (MD) or 227B KTU — Auxiliary Lamp Relay Circuit

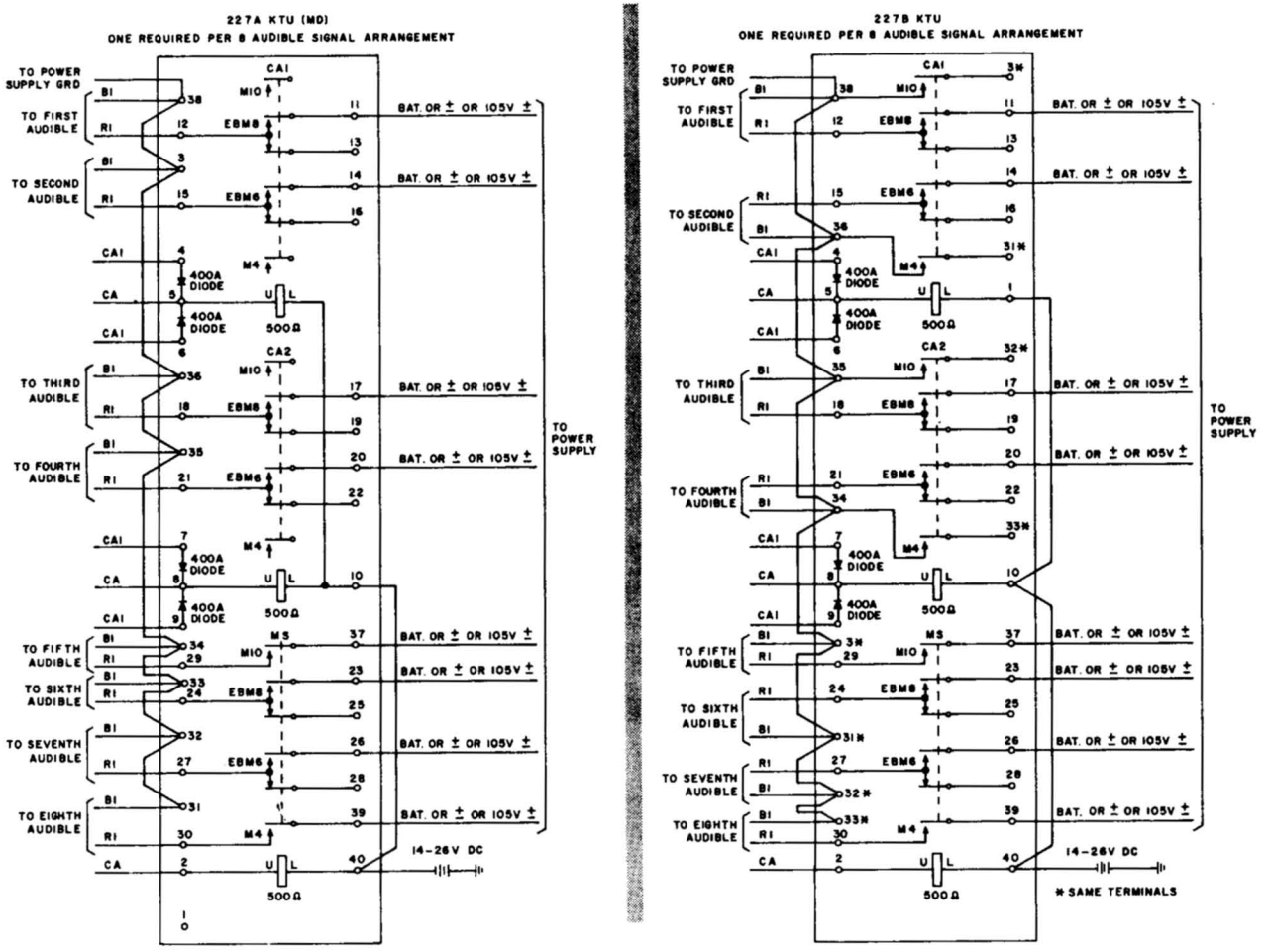

Fig. 4 — 227A (MD) or 227B KTU — Multisignal Control Circuit for Buzzers, Bells, or Ringers

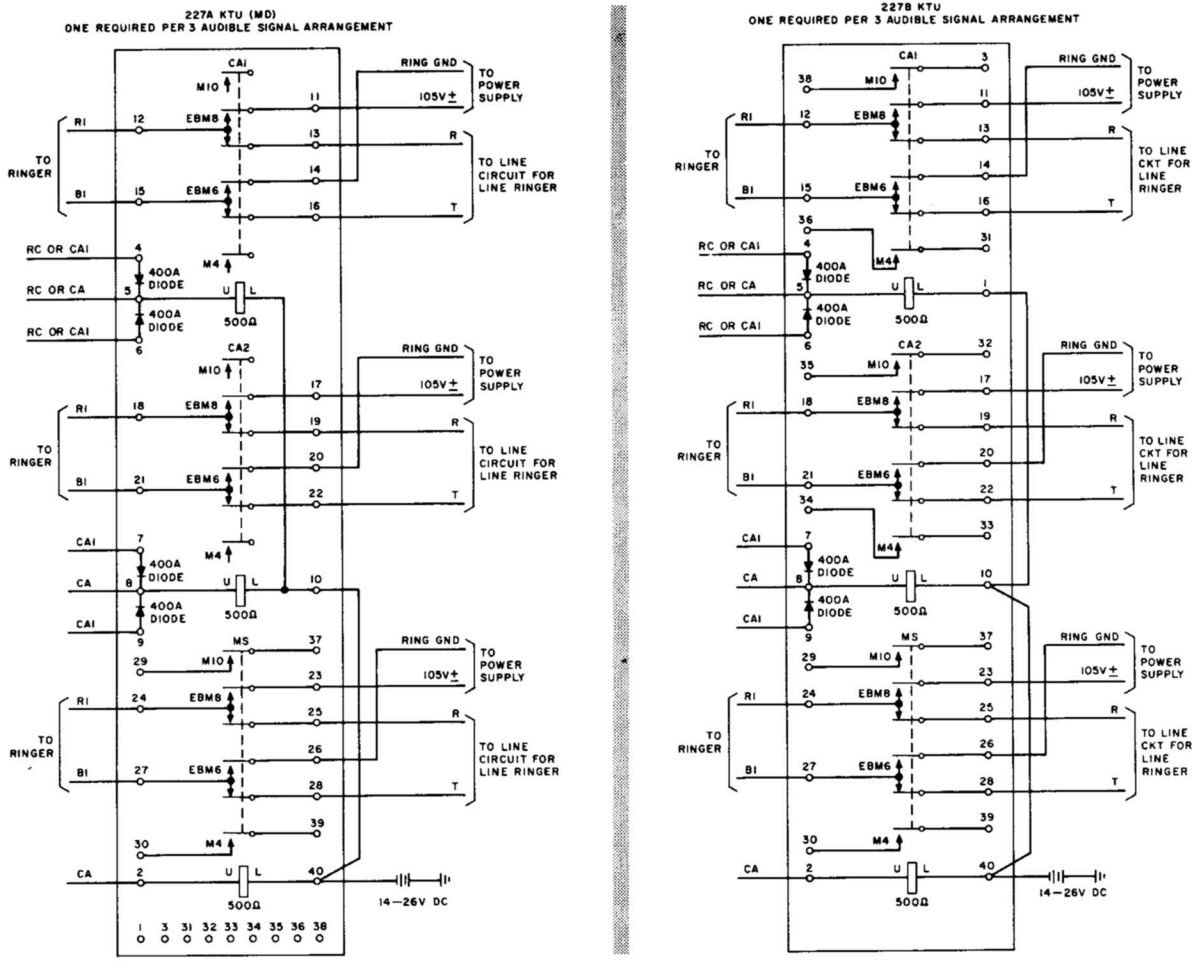

Fig. 5—227A (MD) or 227B KTU—Multisignal Control for Ringers

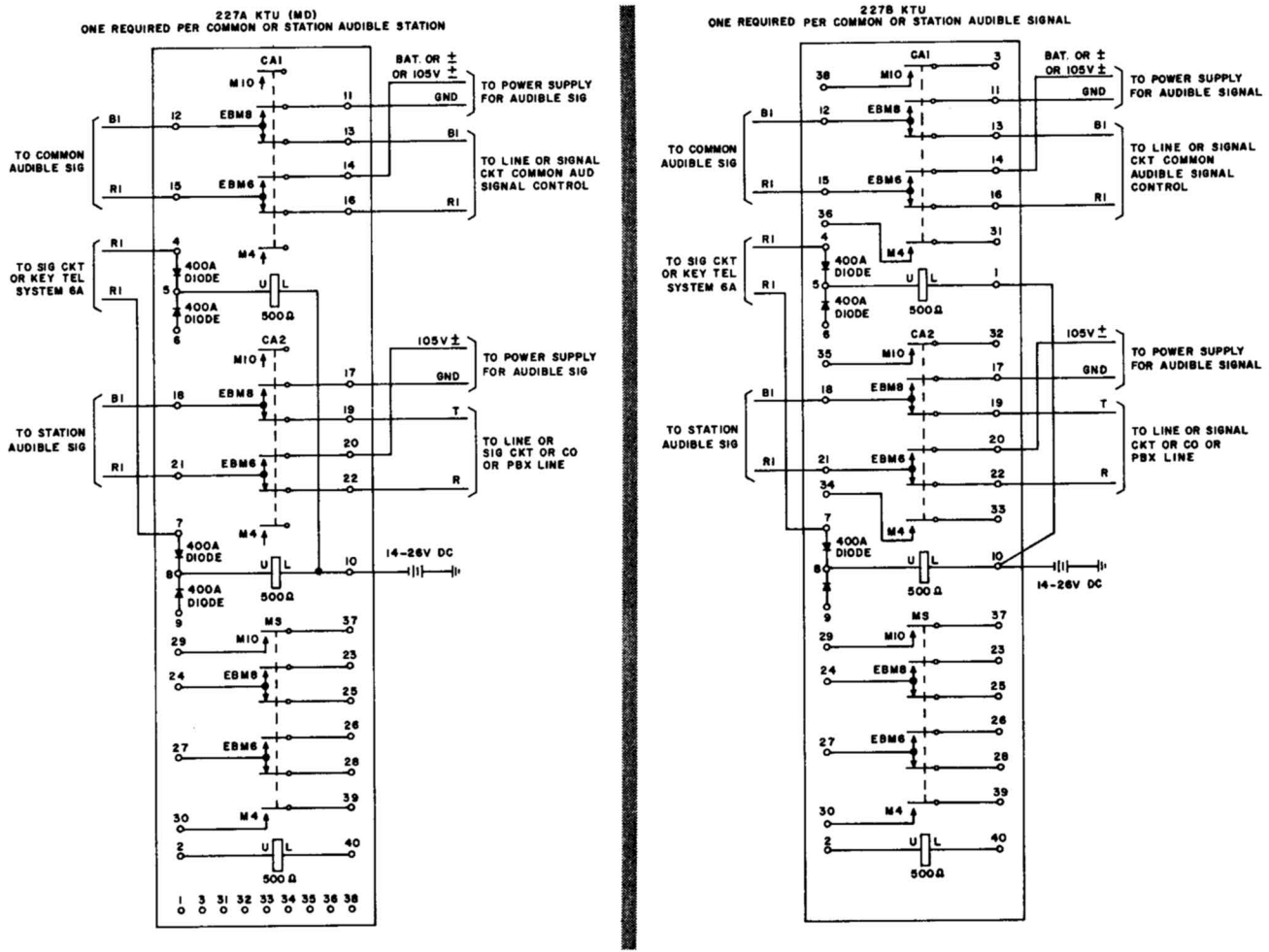

Fig. 6 — 227A (MD) or 227B KTU — Common Audible or Station Audible for 6A Key Telephone System

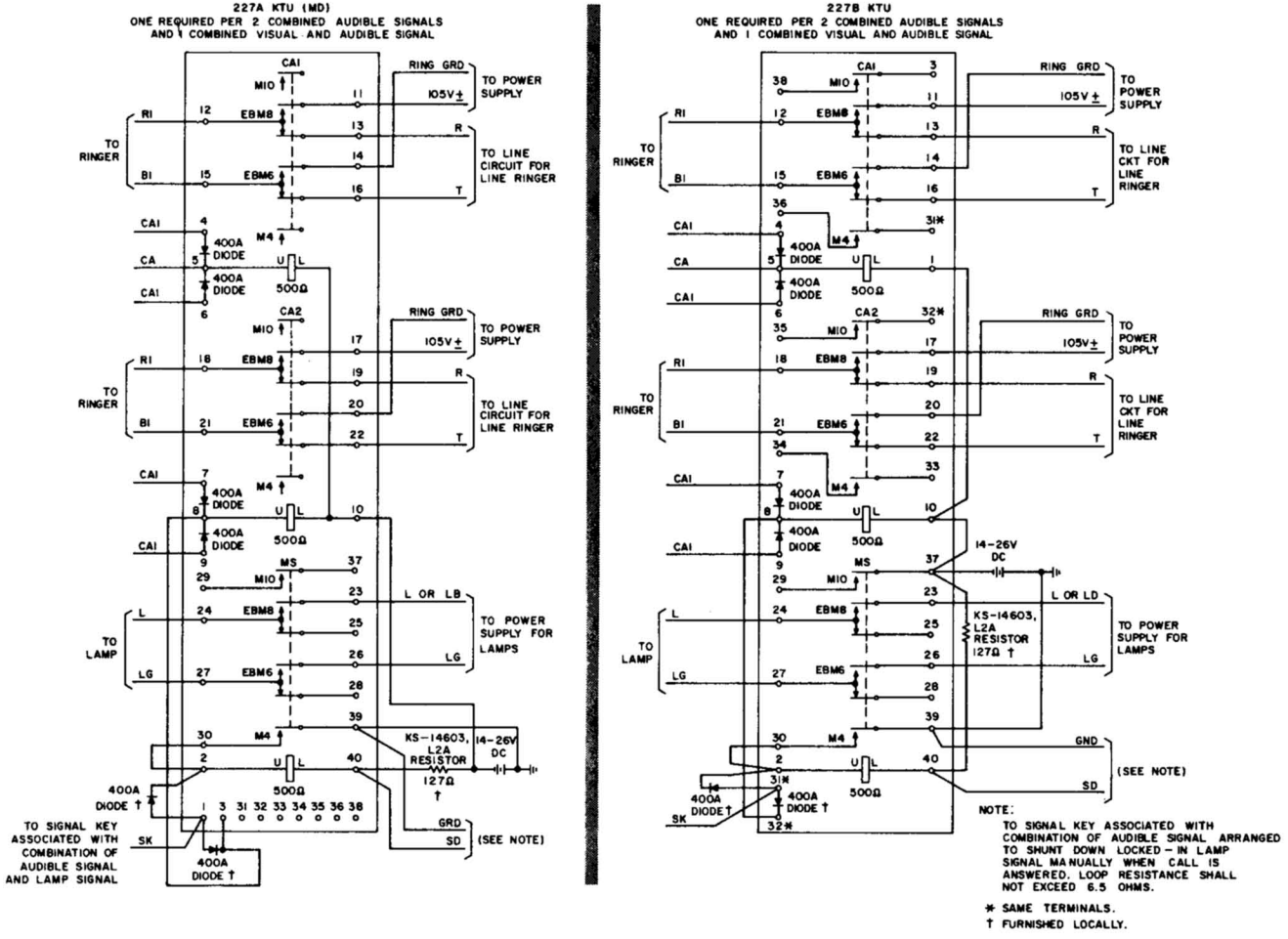

Fig. 7 — 227A (MD) or 227B KTU — Multisignal Control Circuit for Ringers, Arranged for Combination of Audible Signal and Visual Signal

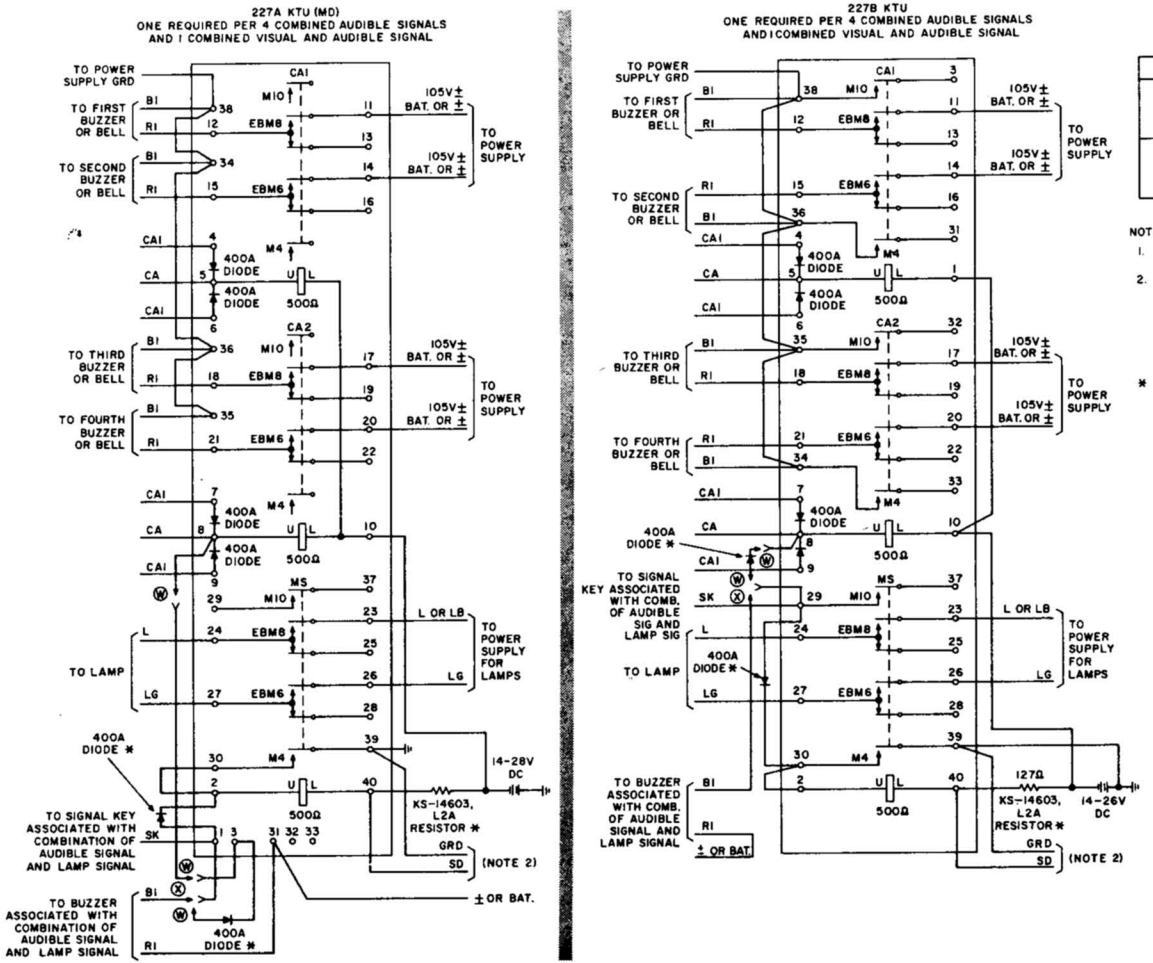

OPTION TABLE

OPTION	FEATURE
W	INDIRECT OPERATION OF BUZZER OF COMB. SIG
X	DIRECT OPERATION OF BUZZER OF COMB. SIG

NOTES:

1. W OPTION USE THIRD AND/OR FOURTH AUDIBLE CIRCUIT.
2. TO SIGNAL KEY ASSOCIATED WITH COMBINATION OF AUDIBLE SIGNAL ARRANGED TO SHUNT DOWN LOCKED IN LAMP SIGNAL MANUALLY WHEN CALL IS ANSWERED. LOOP RESISTANCE SHALL NOT EXCEED 6.5 OHMS.

* FURNISHED LOCALLY

Fig. 8 — 227A (MD) or 227B KTU — Multisignal Control Circuit for Buzzers or Bells Arranged for Combination of Audible Signal with Visual Signal

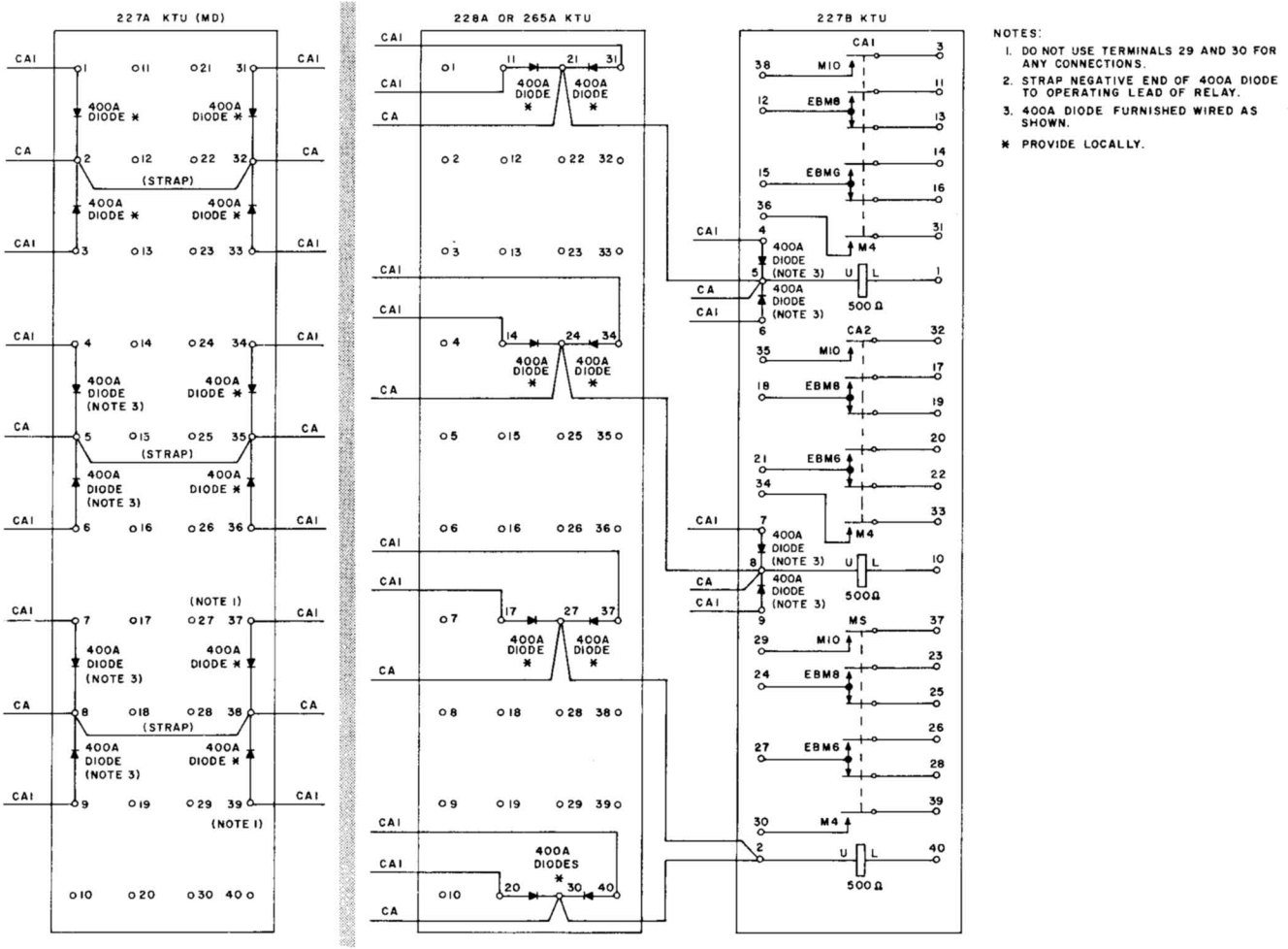

NOTES:

1. DO NOT USE TERMINALS 29 AND 30 FOR ANY CONNECTIONS.
2. STRAP NEGATIVE END OF 400A DIODE TO OPERATING LEAD OF RELAY.
3. 400A DIODE FURNISHED WIRED AS SHOWN.

* PROVIDE LOCALLY.

Fig. 9 — 227A KTU (MD) or 227B KTU with 228A or 265A KTU — Method of Connecting 400A Diodes for Additional CA1 Leads

STATION LINE CONCENTRATORS
235- AND 236-TYPE KEY TELEPHONE UNITS
IDENTIFICATION AND CONNECTIONS

1. GENERAL

1.01 This section is reissued to:

- Revise option information in Fig. 3, 4, 5, and 6
- Add Table A

1.02 When a 446F diode and 185A network are added to the 235A (MD) or 236A (MD) KTU they become identical to the 235B and 236B KTUs, respectively (Fig. 1 and 2).

2. IDENTIFICATION

PURPOSE

- To reduce the number of conductors required to connect key system line circuit units and CALL DIRECTOR® concentrator telephone sets or large capacity 400-type key mountings

APPLICATION

- Used with 1A1, 1A2, or 6A Key Telephone Systems.
- A 235B KTU can be used as a station line concentrator for a maximum of 18 line circuits in conjunction with 634-, 638-, or their equivalent TOUCH-TONE type CALL DIRECTOR telephone sets. A 236B KTU can be used for a maximum of 30 lines with 635-, 639-, or their equivalent TOUCH-TONE type sets or 400-type key mountings. More than one 236B KTU may be required with larger 400-type key mountings where the number of lines exceed 30, with a maximum of 120 lines. Station line concentrator units must be supplied on a per station basis.

ORDERING GUIDE

Unit, Telephone, Key, 235B

Unit, Telephone, Key, 236B

(a) ***Optional Components (ordered and installed separately)***

- P-90D033 Printed Wiring Board Assembly
- Diode, 446F for 235A (MD) and 236A (MD) KTU
- Diode, 400(*) for 235A (MD) and 236A (MD) KTU
- Network, 185A for 235A (MD) and 236A (MD) KTU

* Add type suffix

DESIGN FEATURES

- Circuitry for connecting a common transmission pair and control lead through a combination of two switching relays to the selected line circuit. Refer to Table A for relay operating combinations.
- Option of common audible or individual line ringer.
- Power failure option when common audible is not required.
- Common audible with power failure.

3. CONNECTIONS

3.01 All lamp control, speakerphone, and A1 leads from CALL DIRECTOR set or 400-type key mountings bypass station concentrator units and are wired directly to the station line unit.

© American Telephone and Telegraph Company, 1970
Printed in U.S.A.

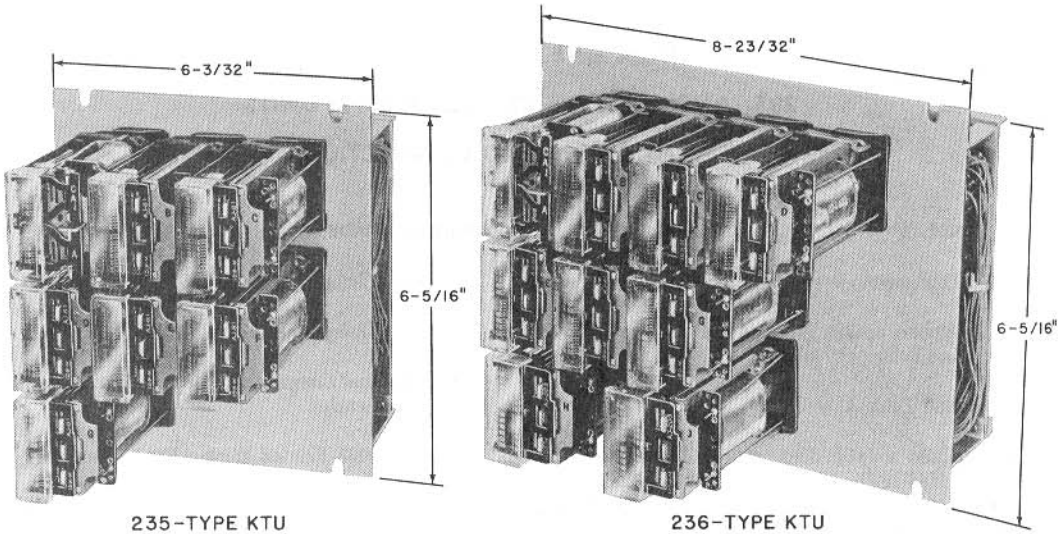

Fig. 1—Station Line Concentrator KTUs, Front View

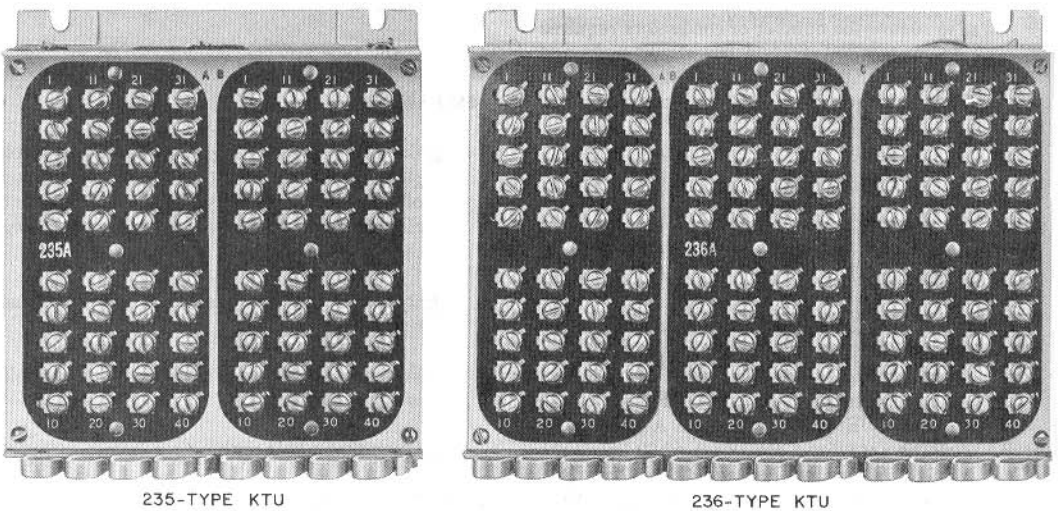

Fig. 2—Station Line Concentrator KTUs Rear View

◗TABLE A◖

COMBINATIONS OF RELAYS OPERATED IN STATION LINE CONCENTRATOR WHEN ASSOCIATED KEY POSITION IS OPERATED

KEY POS (NOTE)	RELAYS																
	236A OR B KTU										235A OR B KTU						
	A	B	C	CA1	D	E	F	G	H	J	A	B	C	D	E	F	G
1	•	•									•	•					
2	•		•								•		•				
3		•	•									•	•		•		
4	•				•						•			•			
5		•			•							•		•			
6				•					•				•	•			
7			•		•						•				•		
8		•				•						•			•		
9			•			•							•		•		
10					•	•								•	•		
11			•				•				•					•	
12					•		•					•				•	
13						•	•						•			•	
14					•			•						•		•	
15						•		•			•						•
16							•	•				•					•
17	•								•				•				•
18		•							•					•			•
19			•						•								
20					•				•								
21						•			•								
22							•		•								
23								•	•								
24	•									•							
25		•								•							
26			•							•							
27					•					•							
28						•				•							
29							•			•							
30								•		•							

Note: Key Mountings with more than 30 pick-up key positions would require additional 236-type KTUs and relay combinations would be identical for each 30 succeeding key positions.

3.02 When the busy lamp feature is furnished in CALL DIRECTOR telephone sets equipped with headset jacks (638-, 639-, and equivalent TOUCH-TONE types), a P-90D033 Printed Wiring Board Assembly must be added to the 235- or 236-type KTU as shown in Fig. 4 or 6.

3.03 Modification of 235A and 236A KTUs are required when used with 400D KTUs. The modification prevents a false-hold condition or damage to the Q3 transistor in the 400D KTU caused by large transient voltages occurring when the associated concentrator type CALL DIRECTOR set goes on-hook. Modification of concentrator units is not required when used with 1A1 KTS, or 400B or C KTUs in 1A2 KTS.

CONNECTION INDEX

Table B—Options

Fig. 3—Connections for 235-Type KTU When Used With 634-, 635-, and Their Equivalent TOUCH-TONE Telephone Sets

Fig. 4—Connections for 235-Type KTU When Used With 638-, 639-, and Their Equivalent TOUCH-TONE Telephone Sets and P-90D033 Printed Wiring Board Assembly.

Fig. 5 —Connections for 236-Type KTU When Used With 634-, 635-, and Their Equivalent TOUCH-TONE Telephone Sets

Fig. 6—Connections for 236-Type KTU When Used With 638-, 639-, and Their Equivalent TOUCH-TONE Telephone Sets

For other information, refer to:

DRAWING	TITLE
SD and CD-69498-01	(Key Telephone System No. 6A, 1A1, and 1A2, Station Line Concentrator, 634-, 635-, 1634-, and 1635-Type Telephone Set Circuits)
SD and CD-69499-01	(Key Telephone System No. 1A1, 1A2, and 6A Station Line Concentrator Key and Telephone Circuit, 638-, 1638-, 639-, and 1639-Type Telephone Sets)
SD and CD-69513-01	(Key Telephone System No. 1A2, CO, or PBX Line Circuits)
SD and CD-69580-01	(Key Telephone System No. 1A1 or 1A2, Station Busy Lamp Circuit)

TABLE B

OPTIONS

FEATURE	KTU							
	235				236			
	A		B		A		B	
	634-, 635-, AND TOUCH-TONE EQUIVALENT TYPE TELEPHONE SET	638-, 639-, AND TOUCH-TONE EQUIVALENT TYPE TELEPHONE SET	634-, 635-, AND TOUCH-TONE EQUIVALENT TYPE TELEPHONE SET	638-, 639-, AND TOUCH-TONE EQUIVALENT TYPE TELEPHONE SET	634-, 635-, AND TOUCH-TONE EQUIVALENT TYPE TELEPHONE SET	638-, 639-, AND TOUCH-TONE EQUIVALENT TYPE TELEPHONE SET	634-, 635-, AND TOUCH-TONE EQUIVALENT TYPE TELEPHONE SET	638-, 639-, AND TOUCH-TONE EQUIVALENT TYPE TELEPHONE SET
Common Audible	X	X	X	X	Y	Y	Y	Y
Power Failure	W	W	W	W	Z	Z	Z	Z
Common Audible With Power Failure	J	H	J	H	K	J	K	J
With Station Busy Lamp Circuit	M	G	M	G	M	G	M	G
Without Station Busy Lamp Circuit	E	F	–	–	E	F	–	–
Individual Line Signaling	V	V	V	V	T	T	T	T
Not Associated With 400D KTU	F	B	–	–	F	B	–	–
Associated With 400D KTU in No. 1A2 KTS	G	E	–	–	G	E	–	–
29 Lines With Hold	–	–	–	–	R	K	R	K
30 Lines Without Hold	–	–	–	–	N	M	N	M

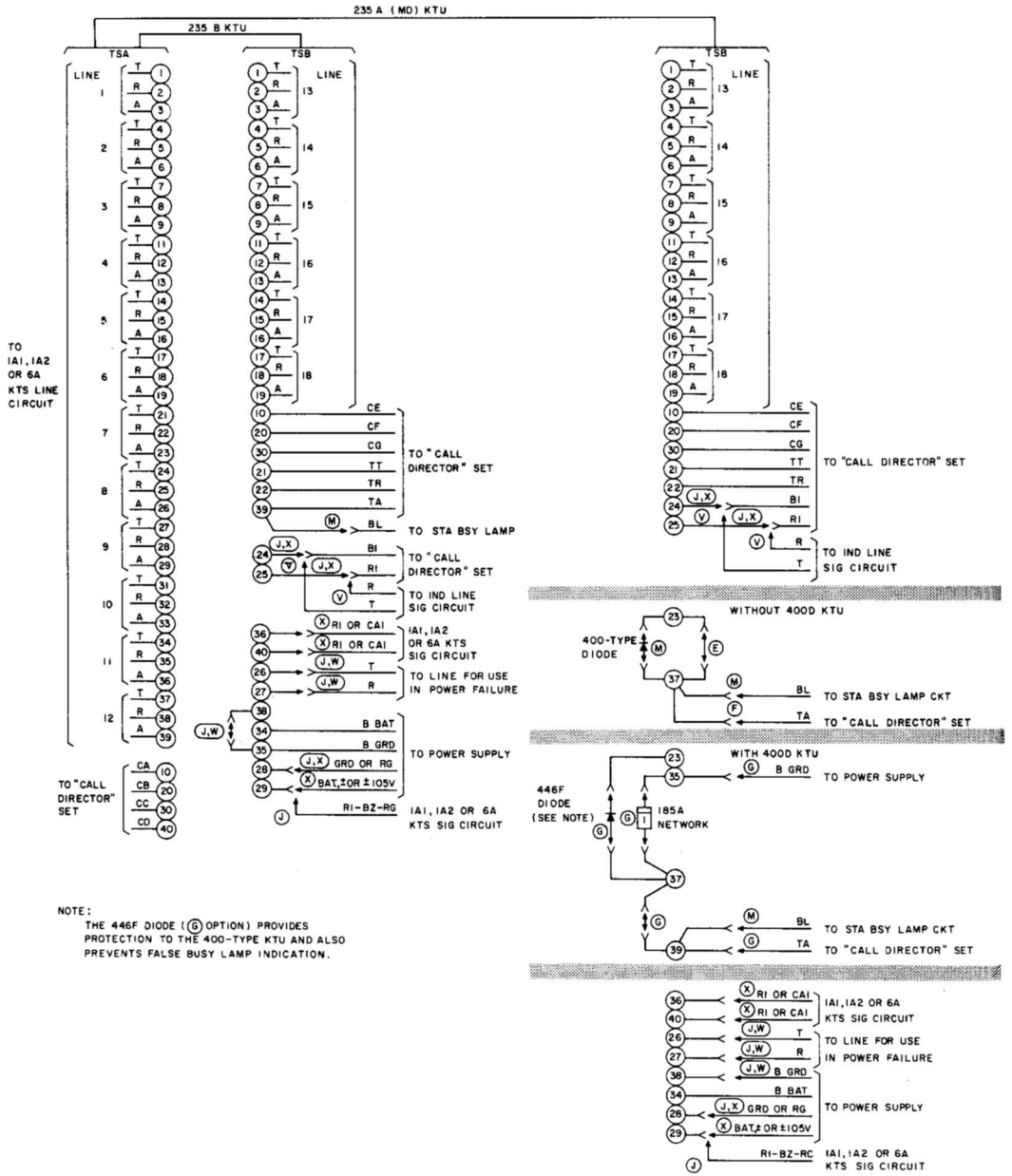

NOTE:
THE 446F DIODE (Ⓖ OPTION) PROVIDES PROTECTION TO THE 400-TYPE KTU AND ALSO PREVENTS FALSE BUSY LAMP INDICATION.

Fig. 3—Connections For 235-Type KTU When Used With 634-, 635- and Their Equivalent TOUCH-TONE Telephone Sets

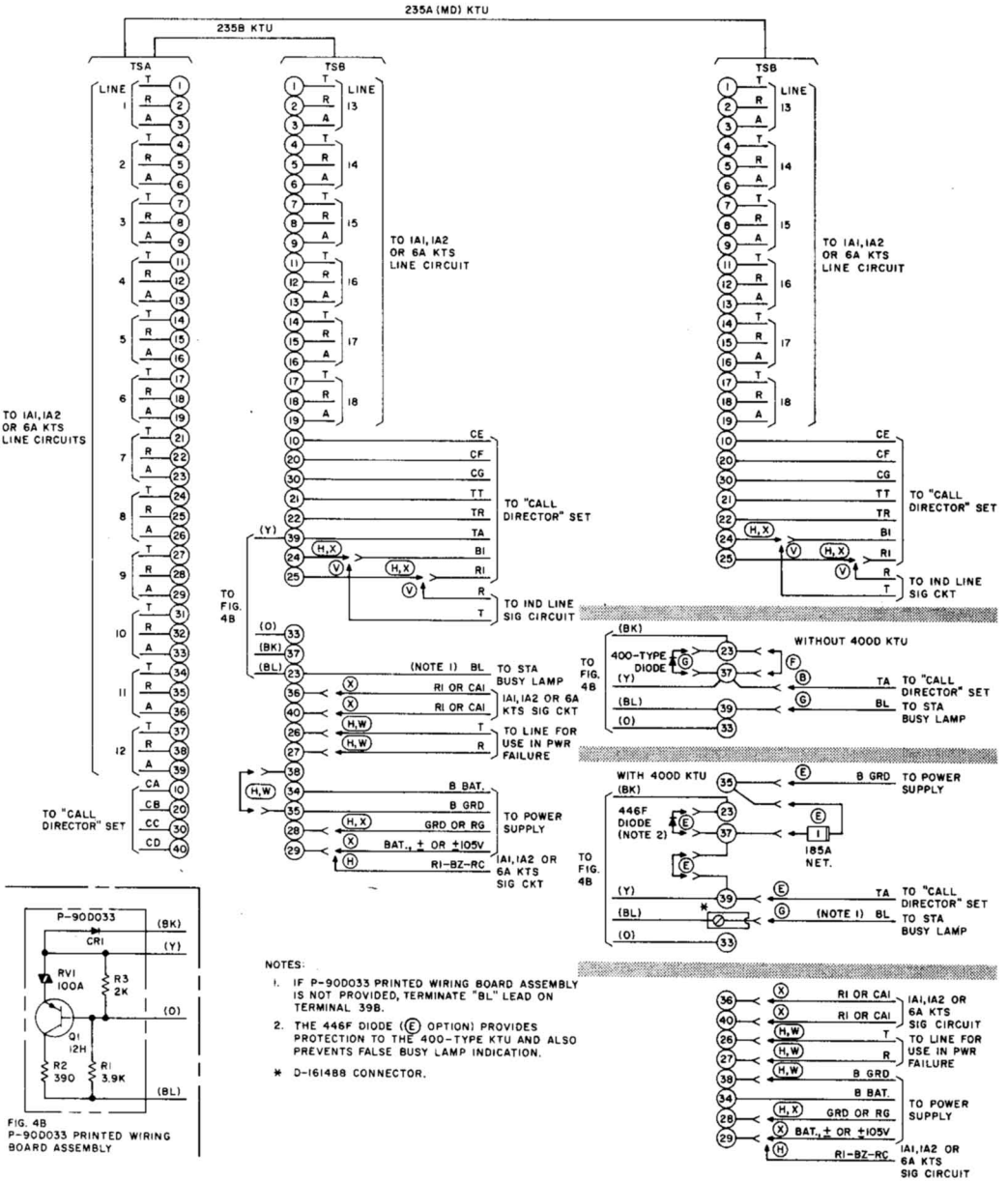

Fig. 4—Connections for 235-Type KTU When Used With 638-, 639- and Their Equivalent TOUCH-TONE Telephone Sets and P-90D033 Printed Wiring Board Assembly

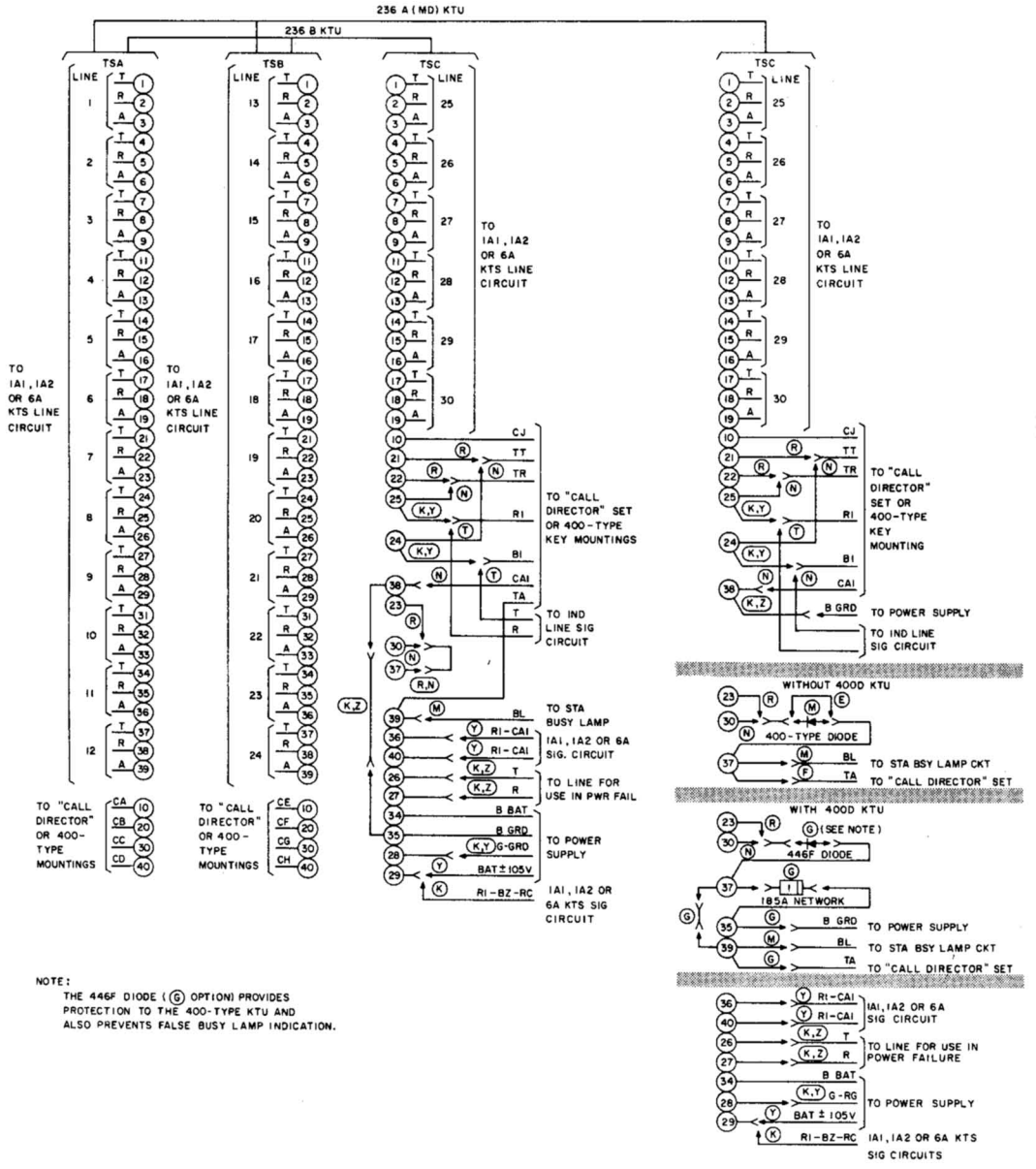

NOTE:
THE 446F DIODE (Ⓖ OPTION) PROVIDES PROTECTION TO THE 400-TYPE KTU AND ALSO PREVENTS FALSE BUSY LAMP INDICATION.

Fig. 5—Connections for 236-Type KTU When Used With 634-, 635- and Their Equivalent TOUCH-TONE Telephone Sets

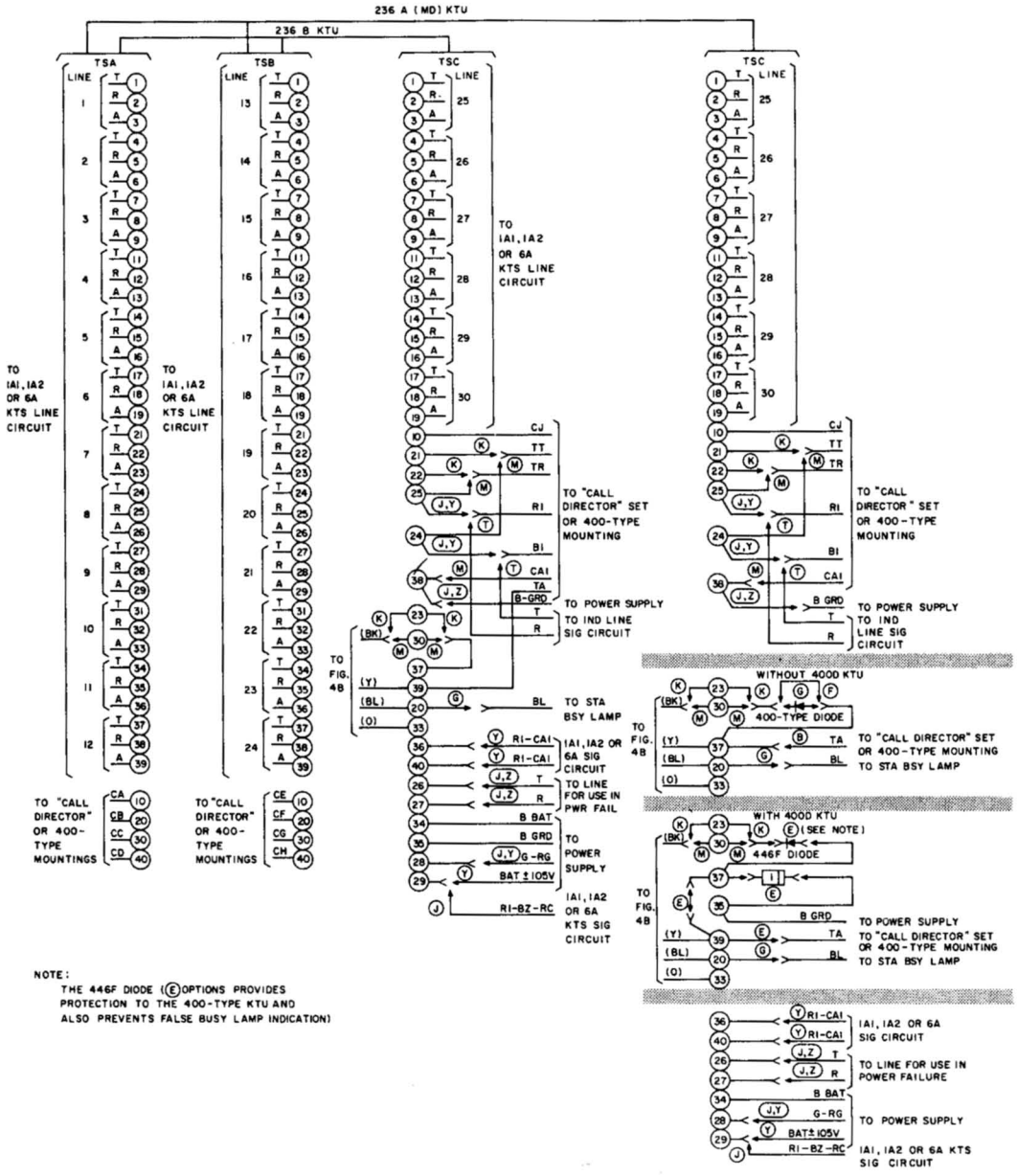

NOTE:
THE 446F DIODE (Ⓔ OPTIONS PROVIDES PROTECTION TO THE 400-TYPE KTU AND ALSO PREVENTS FALSE BUSY LAMP INDICATION)

Fig. 6—Connections for 236-Type KTU When Used With 638-, 639- and Their Equivalent TOUCH-TONE Telephone Sets

KEY TELEPHONE UNIT

237-TYPE

IDENTIFICATION, OPERATION, AND CONNECTIONS

1. GENERAL

1.01 This section is reissued to:

- Delete Speakerphone System No. 1A and 1A1 connections
- Add Speakerphone System No. 4A connections to Fig. 2, 3, and 4.

2. IDENTIFICATION

PURPOSE

2.01 ▶The 237-type key telephone unit (KTU) (Fig. 1) provides for bridging of two lines for a 3-way conference in the following arrangements:

- A central office (CO) line and a PBX line
- Two PBX lines or two CO lines

Note: Transmission quality cannot be guaranteed when two CO lines are bridged.

- A CO or PBX line and an intercom line.◀

APPLICATION

- ▶CO or PBX lines used in Key Telephone System No. 1A, 1A1, or 1A2.◀

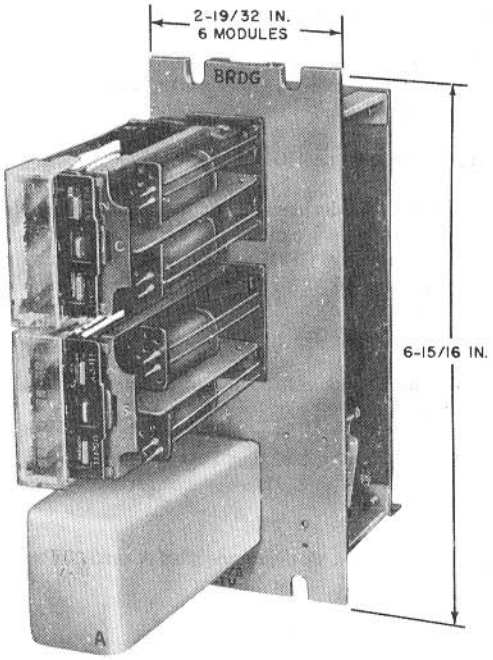

Fig. 1—237B Key Telephone Unit

DESIGN FEATURES

- ▶Circuit can be operated by exclusion switch, external nonlocking key, or converted line pickup key.
- Circuit busy lamp when line pickup key is used.
- Control station can leave conference by placing line on hold and remaining off-hook, allowing other parties to continue conversation without transmission loss.
- Circuit may be controlled by two stations when diode protection is locally furnished.
- Either control station can disconnect from conference leaving two parties to continue conference.
- Compatible with speakerphone.
- Circuit is arranged to cancel conference when handset is placed on-hook or speakerphone is returned to OFF.

© American Telephone and Telegraph Company, 1974
Printed in U.S.A.

- One of the conference lines may be disconnected by returning exclusion key to normal or by operating the nonlocking key.◀
- No operator assistance necessary.

3. METHOD OF OPERATION

3.01 ***Initiating a Conference Call:***

(1) Establish a call (either an incoming or outgoing call) on either of the lines associated with the bridging circuit.

(2) Place call on HOLD.

Note: Under certain conditions, it is possible to establish a call on the other line without placing the first call on HOLD. This is undesirable since the first party hears the dialing signals which are intolerably loud under these conditions.

(3) Establish a call on the other line associated with the bridging circuit.

(4) Operate the bridging key when both parties are available, thereby conferencing both lines.

3.02 ***Leaving a Conference Call (Control Party Only):***

(1) Operate the hold key.

(2) Operate a third pickup key to answer or establish a call on another line.

Note: The control party may return to the conference by reoperating either of the two associated pickup keys. However, when a conference is placed on HOLD, transmission losses are introduced by the holding bridge which may prevent the remaining conferees from continuing the conference until the control party returns.

3.03 ***Releasing a Conference Call:***

(1) Control party—Place handset on-hook or

(2) Return manual exclusion key to normal or

(3) Operate speakerphone OFF button.

Note: The control party can remain connected to either line after the conference has been released by depressing the pickup key for the line which is to remain connected, and momentarily operating the nonlocking key or restoring the exclusion key to normal.

4. CONNECTIONS

4.01 When a nonlocking key is used to control the bridging circuit, a locally provided KS-15724, List 1 diode (or equivalent) must be installed in the A lead of the control station set. For KS-15724 diode connections, refer to "Station Busy Lamp" option for the particular set in the associated connection section. Failure to install the diode may cause damage to transistor Q3, a false hold condition, or both, in the 400D KTU line circuit. These conditions are caused when the control station goes on-hook after a conference is completed.

Two-Station Control

4.02 When two stations are connected to the bridging circuit, each of the station sets may independently or jointly control the circuit. When the circuit is connected to two station sets, operation is the same as when connected to only one station set.

Note: When two station sets are to be provided with bridging circuit control by using nonlocking keys, two KS-15724, List 1 (or equivalent) diodes must be locally supplied and connected as shown in Fig. 4.

4.03 When one of the two control stations is using the bridging circuit and the other station goes off-hook, the BL leads from each telephone set will provide a locking path for the operated circuit. If the first station terminates the call before the second station, the nonlocking control key on the telephone set at the first station must be momentarily operated to release the bridging circuit.

4.04 When one station is using the bridging circuit and the other station is not in use, the circuit will release when the station goes on-hook or the speakerphone is turned off.

4.05 When a conference call is in a held condition, the bridging circuit remains operated.

Note: To minimize transmission losses, each line associated with the 237A or B key telephone unit should be connected to the same type line equipment. This is necessary due to the differences in design of holding circuits.

4.06 ***Connection Index***

Fig. 2—237A (MD) KTU, Schematic and Connections

Fig. 3—237B KTU, Schematic and Connections

Fig. 4—AG and BL Lead Connections for 2-Station Control.

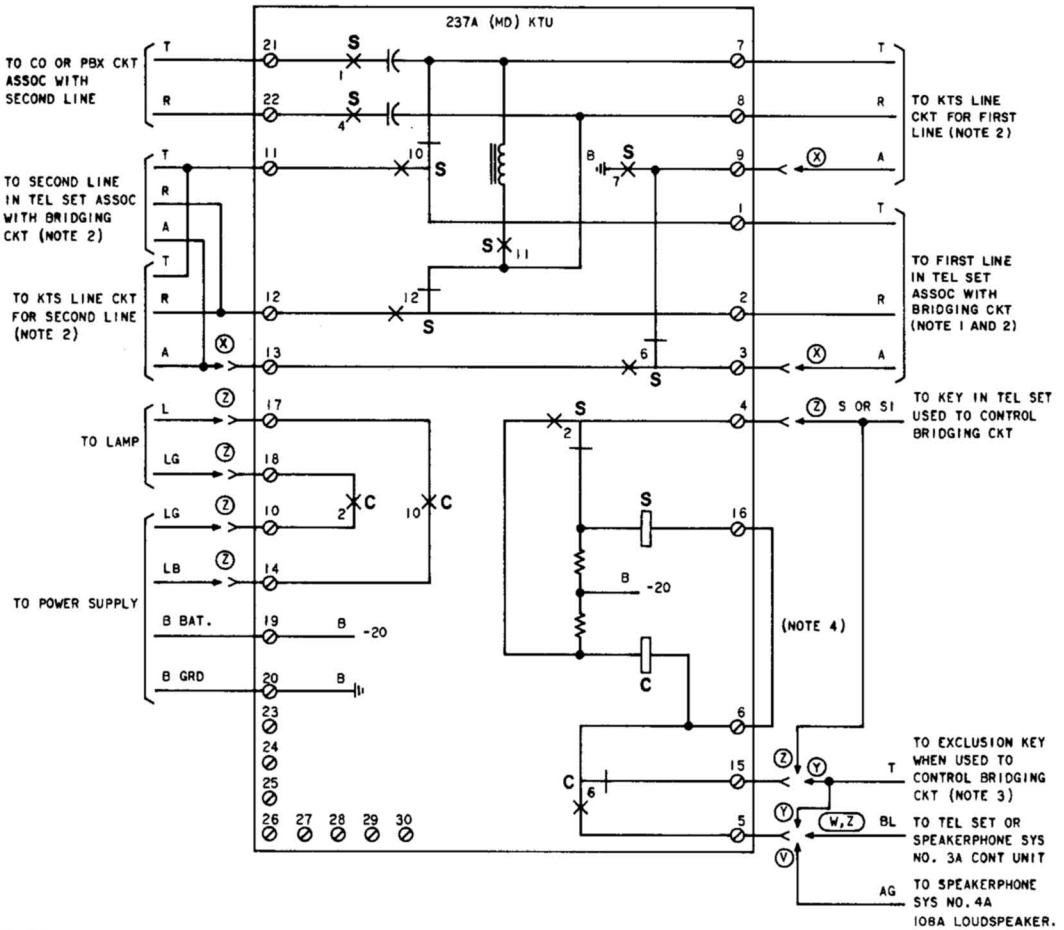

NOTES:

1. THE STATION UTILIZING THE BRIDGING CIRCUIT MUST BE EQUIPPED WITH A HOLD KEY. THE BRIDGING CIRCUIT MAY BE CONTROLLED BY A NONLOCKING KEY OR AN EXCLUSION KEY.
2. THE A LEAD IS OMITTED IN KEY TEL SYS NO. 1A.
3. WHEN THE CIRCUIT IS CONTROLLED BY THE EXCLUSION KEY, REMOVE THE EXCLUSION LEADS FROM IT AND IR TERMINALS IN TELEPHONE SET AND INSULATE. B GROUND IS CONNECTED TO THE BK-BL LEAD ON THE EXCLUSION KEY.
4. REMOVE STRAP BETWEEN TERMINALS 6 AND 16 WHEN TESTING OR READJUSTING RELAY C OR S.

(Z) CONTROLLED BY NONLOCKING KEY.
(Y) CONTROLLED BY EXCLUSION KEY.
(X) CONNECTED TO KEY TEL SYS NO. 1A1 OR 1A2.
(W) CONNECTED TO SPEAKERPHONE SYS NO. 3A CONT UNIT.
(V) CONNECTED TO SPEAKERPHONE SYS NO. 4A 108A LOUDSPEAKER.

Fig. 2—237A (MD) KTU Schematic and Connections

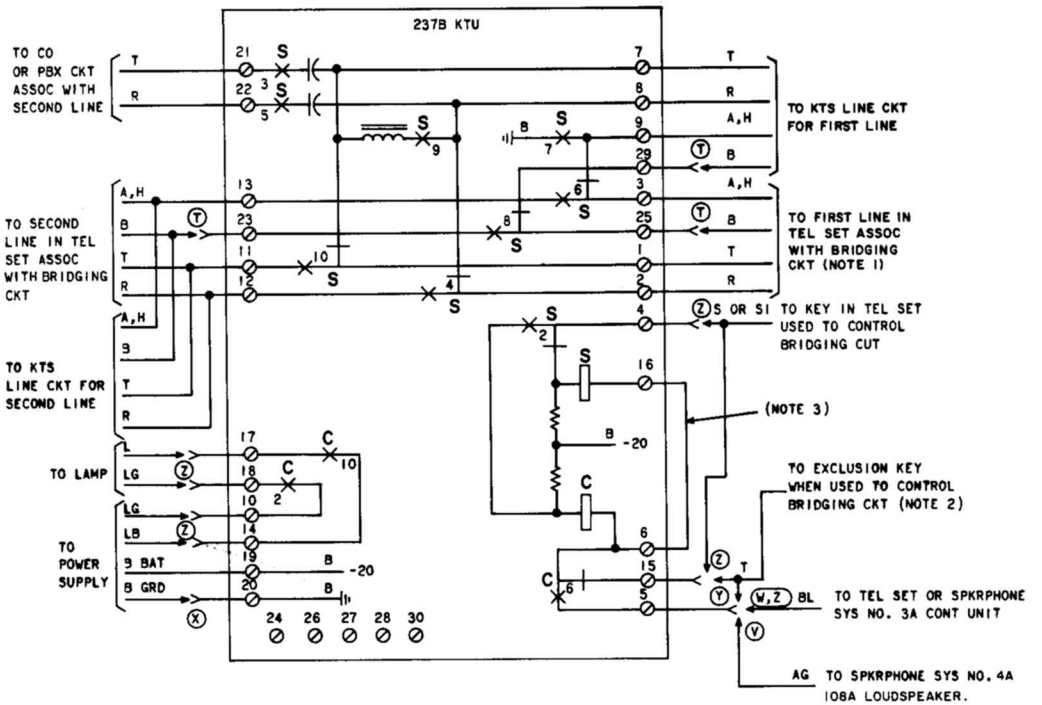

NOTES:

1. THE STATION UTILIZING THE BRIDGING CIRCUIT MUST BE EQUIPPED WITH A HOLD KEY. THE BRIDGING CIRCUIT MAY BE CONTROLLED BY A NONLOCKING KEY OR AN EXCLUSION KEY.
2. WHEN THE CIRCUIT IS CONTROLLED BY THE EXCLUSION KEY, REMOVE THE EXCLUSION LEADS FROM IT AND IR TERMINALS IN TELEPHONE SET AND INSULATE. B GROUND IS CONNECTED TO THE BK-BL LEAD ON THE EXCLUSION KEY.
3. REMOVE STRAP BETWEEN TERMINALS 6 AND 16 WHEN TESTING OR READJUSTING RELAYS C OR S.

(T) CONNECTED TO KEY TEL SYS NO. 1A.

(V) CONNECTED TO SPEAKERPHONE SYSTEM NO. 4A 108A LOUDSPEAKER.

(W) CONNECTED TO SPEAKERPHONE SYSTEM NO. 3A CONTROL UNIT.

(X) CONNECTED TO KEY TEL SYS NO. 1A1 OR 1A2.

(Y) CONTROLLED BY EXCLUSION KEY.

(Z) CONTROLLED BY NONLOCKING KEY.

Fig. 3—237B KTU, Schematic and Connections

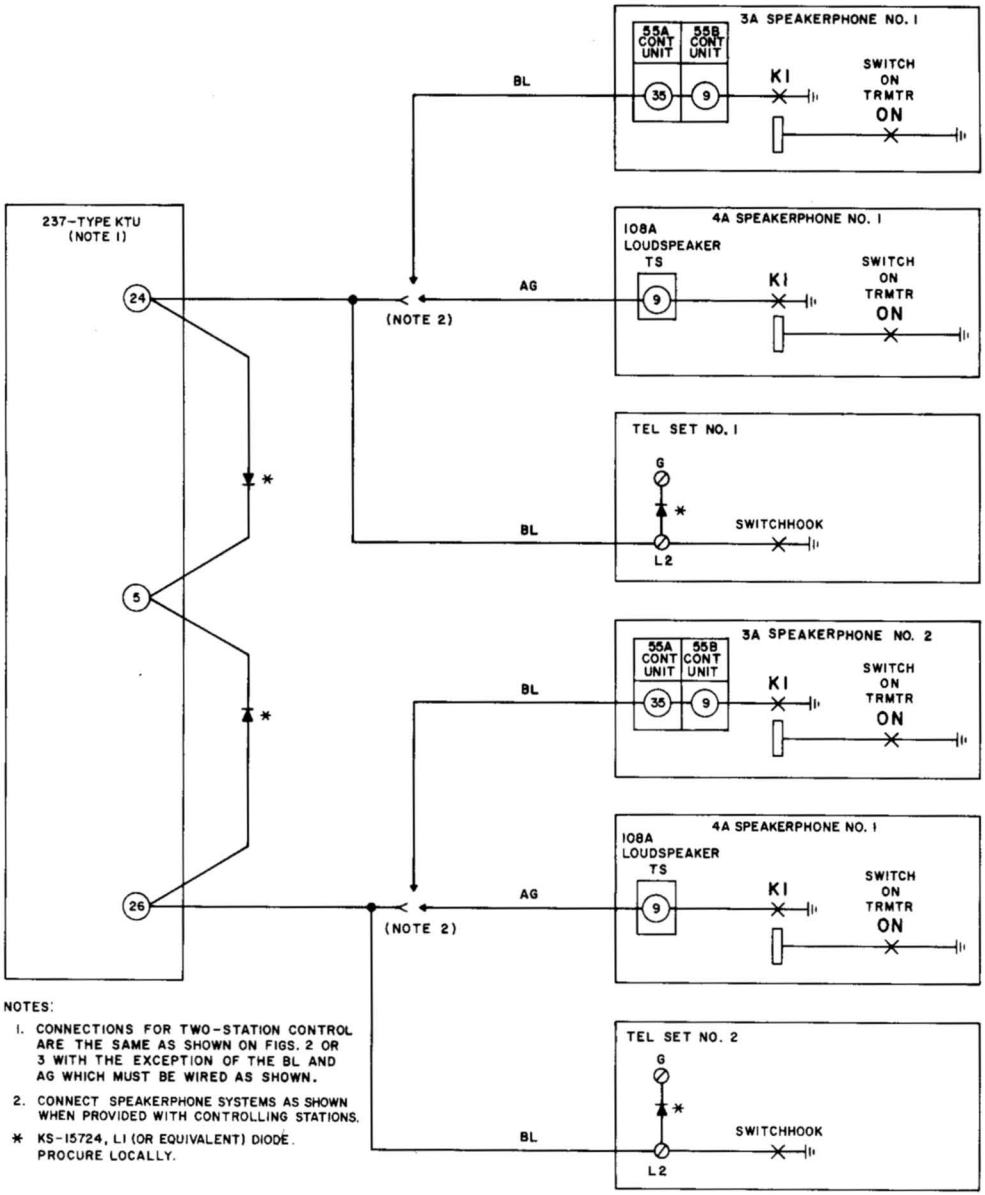

Fig. 4—AG and BL Lead Connections for 2-Station Control

6B KEY TELEPHONE SYSTEM
DIALOG* INTERCOM SYSTEM

CONTENTS PAGE

1. GENERAL 2
2. DESCRIPTION 2
SYSTEM 2
572A1 KSU 4
KEY TELEPHONE UNITS 6
A. 484A KTU—Station Interface Circuit . 6
B. 485A KTU—Controller Circuit . . 7
C. 486A KTU—System Service Circuit . 7
D. 487A KTU—Battery Feed Circuit . 8
E. 488A KTU—Line Interface Circuit . 8
F. 489A KTU—TOUCH-TONE Decoder Circuit 9
184C1 BACKBOARD 9
3. INSTALLATION 9
ORDERING GUIDE 9
A. Basic System 9
B. Optional Features 9
572A1 KSU 12
KEY TELEPHONE UNITS 13
TELEPHONE SETS 13
OFF-PREMISES EXTENSIONS 21
EXTERNAL SIGNALING OR LOUD RINGING BELLS 21
4. OPERATION—STANDARD FEATURES . . 21
INTERCOM LINE PICKUP AND HOLD . 21
SUPERVISORY FLASH FEATURES . . . 28
DIAL-ACTIVATED FEATURES 28
A. Flexible Dial Conferencing 28
B. Do-Not-Disturb (DND) 29
C. Call Forwarding 29
D. Call Forwarding—Do-Not-Disturb . 30
AUTOMATIC CALLBACK (ACBK) . . . 30
CALL SCREENING 31
OVERRIDE (OVRD) 31
REMOTE ANSWER (REAN) 31
5. OPERATION—OPTIONAL FEATURES . . 32
FOUR LINKS 32
TOUCH-TONE SETS 32
HANDS-FREE ANSWER ON INTERCOM (HFAI) 32
PAGING ACCESS 33

*Trademark of AT&T.

NOTICE
Not for use or disclosure outside the
Bell System except under written agreement

Printed in U.S.A.

CONTENTS PAGE

CO/PBX LINE ACCESS 33

ATTENDANT RECALL 35

6. MAINTENANCE 35

A. Feature Sequence Charts 35

B. Trouble Analysis Charts 35

C. Diagnostic Test Sequence 35

1. GENERAL

1.01 This section provides description, installation, connection, operation, and maintenance information for the 6B Key Telephone System (KTS).

1.02 This section is reissued to add information on:

- New 554BMS and 2554BMS telephone sets
- New 324A adapter for external ringing in noisy locations
- Wiring modification of the following telephone sets for use with 6B KTS:

  830/2830FM telephone sets

  TOUCH-A-MATIC® (872-/2872-) telephone sets

  TRIMLINE® telephones

  Jack equipped CALL DIRECTOR® telephones.

1.03 This issue of the section is based on SD-69946-01, Issue 1. If this section is to be used with equipment or apparatus reflecting later issues of the drawings, reference should be made to the SDs and CDs to determine the extent of the changes and the manner in which the section may be affected.

2. DESCRIPTION

SYSTEM

2.01 The 6B KTS is a fully electronic intercom which has a capacity of four separate talking paths (links) and 52 station codes. Up to eight CO/PBX calls can be answered, held, or transferred but CO/PBX calls cannot be originated using the 6B KTS.

> *Note:* More than 52 stations can be installed by having stations share a code. Only two stations per code are permitted and only even numbered codes should be bridged. With this limitation, there can only be six sets served per station circuit (484A key telephone units [KTUS]).

2.02 All required KTUs are mounted in a 572A1 key service unit (KSU). The KSU includes an integral 206A power supply, but 24-volt direct current (dc) and 10-volt alternating current (ac) and their associated grounds must be supplied from the associated key system or a separate power supply.

2.03 All wiring, except power, is brought into the 572A1 KSU through connector cables plugged into the rear of the unit (Fig. 1). An optional 184C1 backboard has been developed as a terminal field for the 6B KTS, or existing blocks in the yellow field of a centralized key system can be used.

2.04 The 6B KTS can be added as an adjunct to any KTS using A-lead control such as the 1A1 or 1A2 KTS. Only one button is required on key telephone sets (rotary dial or TOUCH-TONE® dial). Modification of the HOLD key wiring and a separate 10-volt ac buzzer are required in the telephone sets used with the 6B KTS. Nonkey sets ▶which can be modified for A-lead control, may◀ be used but they will not supply those features involving the HOLD key. ▶A new 554/2554BMS wall telephone set has been introduced as an intercom only instrument for the 6B KTS. This set does not need modification of wiring as do all the other key and nonkey sets used with the 6B KTS. A 500/2500MM or a 502/2502BM telephone set may be used as an intercom only set where the wall set is not applicable.◀

2.05 ▶Loud or external ringers may be added to the 6B KTS with the use of the 324A adapter. Off-premises stations may be added to the 6B KTS but require a separately provided long-line circuit.◀

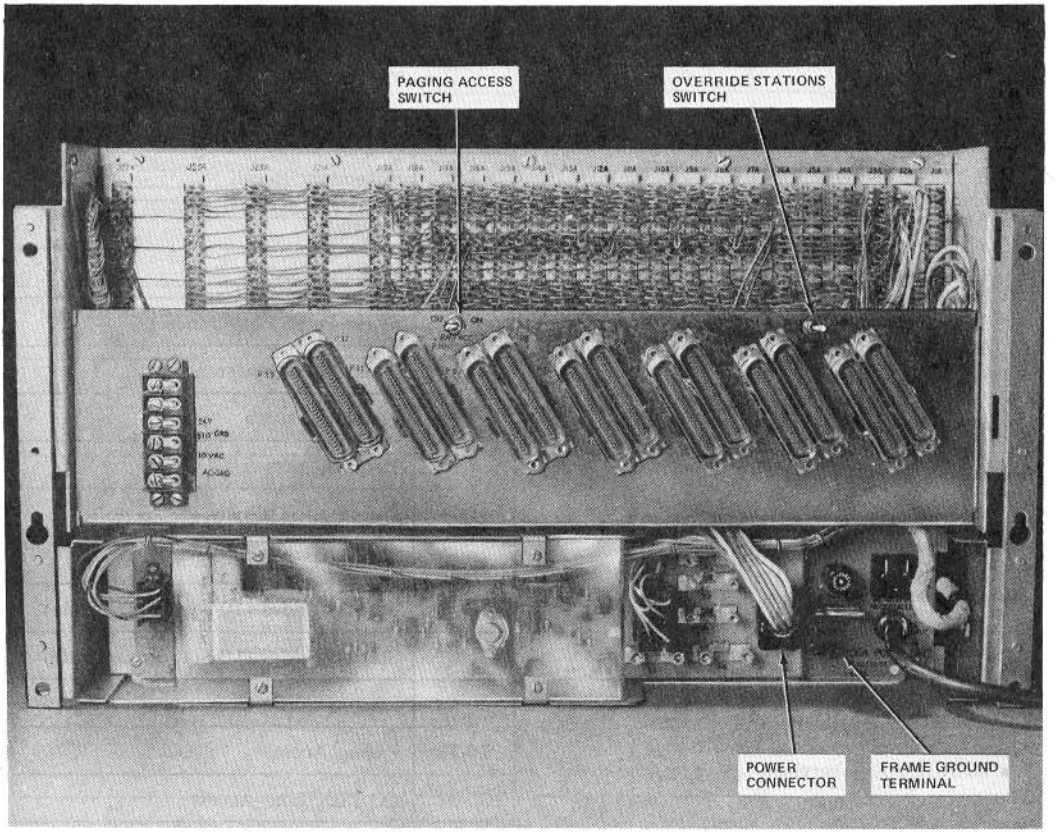

Fig. 1—▶572A1 KSU (Rear View)◀

2.06 The basic system provides the following features:

- Intercom call progress tones such as dial tone, ringback, error tone, etc
- Ringing—the intercom audible is blocked at stations ▶busy on CO/PBX calls◀
- 3- or 4-party conferencing
- Do-not-disturb (DND)
- Call transfer
- Call add-on
- Station and consultation HOLD
- Two-link operation—the register is held during dialing only
- System busy indication
- Privacy—except when override is activated
- Single button appearance on key telephone sets
- Call forwarding

- Override—permits certain stations to bridge onto an established intercom connection or override DND
- Remote answer—permits user at one station to intercept and answer a call intended for a second station
- Automatic callback—enables a user who dials a busy station to program the system to call back when both stations are idle and a link is available.

2.07 Additional features that can be supplied on an optional basis are:

- Additional links—to a maximum of four
- Paging access
- The CO/PBX line access when the line is in the ringing or hold state
- Attendant recall
- Hands-free answer on intercom (HFAI) and voice signaling using a separate station adjunct
- TOUCH-TONE service
- Off-premises stations
- ♦External signaling.♦

2.08 Features (standard and optional) are activated by operation of the station HOLD key, line switch flashing, or by dialing a specified code (Table A). Refer to Part 4 and 5 for complete operation information.

2.09 Call progress tones, indicating that an action is required by the user or that the feature has been activated, are returned to the originator as required (Table B). Cancellation of dial-activated features, where required, is accomplished by dialing the code of the station that originally activated the feature. ***This must be done from the originating station.***

♦TABLE A♦

SYSTEM CODE ASSIGNMENTS

CODE	FUNCTION
00	Attendant Recall
01	Override
02	Call Forwarding
03	Three-Party Conference
04	Four-Party Conference
06	Do-Not-Disturb
07	Remote Answer
09	Automatic Callback
10-11	Station Codes (2-Station Override)
10-19	Station Codes (10-Station Override)
20-61	Station Codes (10-Station Override)*
20-69	Station Codes (2-Station Override)*
70-73	Paging Access*
80-87	CO/PBX Line Access

* Codes 50-53 will not be available for station codes when paging access is provided. These codes become 70-73. See Fig. 39 for further details.

572A1 KSU

2.10 The 572A1 KSU consists of:

- 727A panel equipped with connectors for 22 KTUs
- Plug-in KS-21651, L4 fuseboard
- Fourteen microribbon plugs (P0 is not used in this system)
- Terminal board for incoming power connections
- 206A power supply

TABLE B

CALL PROGRESS TONES

TONE	SIGNAL HEARD	REMARKS
Intercom Dial Tone (IDT)	128 Hz continuous	
Intercom Audible Ringback (IAR)	256 Hz interrupted; 1 second on, 3 seconds off	If any station is equipped with a 2A HFAI unit, IAR consists of a single spurt (1 second) of 128-Hz time.
Intercom Busy Tone (IBT)	128 Hz interrupted at 1/2-second intervals	
Error Tone (ET)	256/512 Hz alternating at 1/2-second intervals	Tone heard when errors are made in setting up dial-activated features. Indicates procedure must be restarted.
Acknowledgment Tone (AT)	128 Hz for 250 ms	Tone heard when feature has been properly activated or canceled. Also heard on paging access calls.
Reminder Tone (RT)	128 Hz interrupted at 75 ms intervals for 1-1/4 seconds; then continuous 128 Hz	Tone heard at start of all calls, followed by dial tone at stations that have activated CFWD, ACBK, or DND as a reminder that feature is in effect.
Override Tone (OT)	128 Hz for 500 ms	Tone heard by both parties of a conversation when a station exercising OVERRIDE is bridged on-line.
Hold Tone (HT)	Four bursts of 128-Hz tone	Tone heard when switchhook is flashed during a call. Hold tone is always followed by steady dial tone.

- ◆Two option switches:

  Paging access

  Override.◆

Twelve microribbon plugs (P1 through P12) on the rear of the KSU accept A25B connector cables which are routed to the 184C1 backboard or the yellow field of centralized key system installations. A P13 also accepts one A25B connector cable but is routed to pick up the incoming CO/PBX lines. The fuseboard on the KSU protects the 10-volt ac and 24-volt dc circuits (Table C). A light emitting diode (LED) on the board indicates operation of any fuse.

2.11 The 206A power supply is mechanically linked to the 727A panel of the KSU. Interconnection is made through a cable from the panel which is plugged into the power supply.

2.12 The 572A1 KSU mounts on 23-inch mountings and requires 13 inches of vertical space. It can be mounted in a 16C apparatus mounting with the center bar removed, or it can be rack-mounted. When mounted in a 16C apparatus mounting, a 117C cover can be provided.

2.13 Refer to Fig. 2 for the location of the KTUs in the 572A1 KSU and the location of major components.

TABLE C

FUSE ASSIGNMENTS–572A1 KSU

LOCATION	FUSE	TYPE	CAPACITY	FUNCTION
KS-21651L4 Fuseboard	1	70H	3/4 Ampere	10-volt ac—Station KTU in J6
	2			10-volt ac—Station KTU in J7
	3			10-volt ac—Station KTU in J8
	4			10-volt ac—Station KTU in J9
	5			10-volt ac—Station KTU in J10
	6			10-volt ac—Station KTU in J11
	7			10-volt ac—Station KTU in J12
	8			10-volt ac—Station KTU in J13
	9			10-volt ac—Station KTU in J14
	10			10-volt ac—Station KTU in J15
	11			10-volt ac—Station KTU in J16
	12			10-volt ac—Station KTU in J17
	13			10-volt ac—Station KTU in J18
	14	70G	1/2 Ampere	−24 volt dc—572A1 KSU
	15			Spare
206A Power Unit	1	24F	5 Ampere	−5 volt dc (Logic) for J1-J8
	2			−5 volt dc (Logic) for J9-J25
	3	24C	2 Ampere	−10 volt dc
	4			+10 volt dc
	5	24E	1/2 Ampere	RAM ground
		MDL 2 BUSSMAN	2 Ampere	110-volt ac input

KEY TELEPHONE UNITS

2.14 The KTUs employed in the 6B KTS are all 8-inch 80-contact boards. All but the 488A KTUs occupy a single-width (3/4 inch) position. The 488A KTUs require a double-width position. The system options and method of application are shown in Table D.

A. 484A KTU—Station Interface Circuit

2.15 The 484A KTUs are installed in jacks 6 through 18, depending on the station codes

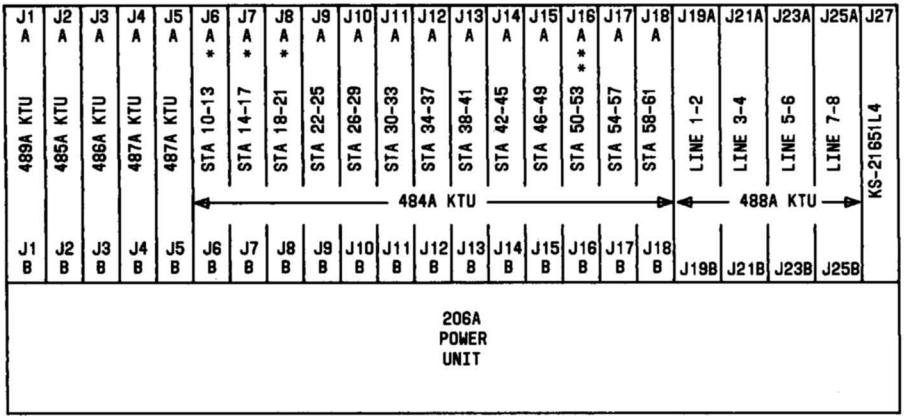

484A KTU-STATION CIRCUIT
485A KTU-CONTROLLER CIRCUIT
486A KTU-SERVICE CIRCUIT
487A KTU-BATTERY FEED CIRCUIT

488A KTU-LINE INTERFACE CIRCUIT
489A KTU-TOUCH-TONE DECODER CIRCUIT
KS-21651L4-FUSEBOARD

* SEE PARAGRAPH 4.20 FOR OPTIONAL OVERRIDE STATION CODE ASSIGNMENTS

* SEE PARAGRAPH 5.08 FOR OPTIONAL PAGING ACCESS CODES

Fig. 2—▶572A1 KSU Circuit Pack Layout (Front View)◀

being installed. Each KTU contains the circuitry for four station codes. The 484A controls the station visual and audible signals from signals received over the H, B, and A leads, and also controls the station busy and station hold features. Control of the seized intercom link is also through the station circuit.

> *Note:* Power interruptions greater than 1.7 seconds will release any calls in progress. Stations that are off-hook when the power is restored will be out of service until they go on-hook momentarily.

B. 485A KTU—Controller Circuit

2.16 The controller circuit processes the calls and features through the system. Contained on the board are the central processing unit, memory, timing circuits, and the -10 volt voltage regulator. The 485A KTU is installed in J2.

C. 486A KTU—System Service Circuit

2.17 The service circuit performs the following functions:

- Generates required system tones
- Switches the tones to the talking links
- Interfaces the control signals from the line and station circuits to the controller
- Switches the TOUCH-TONE receiver to the talking links as required
- The timing generator produces timing signals required by the system, such as lamp flash and lamp wink, and also sets other system timing standards.

Refer to Table B for an outline of the tones used in the 6B KTS. The 486A KTU is installed in J3.

♦TABLE D♦

6B KEY TELEPHONE SYSTEM OPTIONS

OPTION	KTU	OPTION PLUG OR SWITCH POSITION
T—Continuous Ring	484A (Note 1)	A-B (1st and 2nd stations) D-E (3rd and 4th stations)
V—Interrupted Ring		B-C (1st and 2nd stations) E-F (3rd and 4th stations)
W—Single-Spurt Audible Ringback	486A (Note 2)	A-B, D-E
X—Repeated Audible Ringback		B-C, E-F
Y—Fast Disconnect (CSBR)	488A	B-C,(1st circuit) E-F (2nd circuit)
Z—Slow Disconnect (ESS Office)		A-B (1st circuit) D-E (2nd circuit)
S—Without Paging Access	Paging Access Switch (Note 3)	Switch OFF (factory-provided)
R—With Paging Access		Switch ON
N—Two Station Override	Override Switch (Note 3)	"10-11" (factory-provided)
Q—Ten Station Override		"10-19"

Note 1: If hands-free answer on intercom (HFAI) is provided, install option T for station involved. If one of paired circuits has option T, other stations will have it.

Note 2: If any station has HFAI, system must have option W.

Note 3: The paging access and override option switches are located on the rear of the 572A1 KSU.

D. 487A KTU—Battery Feed Circuit

2.18 Each 487A KTU provides the dc voltages for two links. The KTU for the first two links is installed in J4; if a third and fourth link is provided, another KTU must be installed in J5. The 487A KTU also provides a LED for call supervision and dial pulse detection.

E. 488A KTU—Line Interface Circuit

2.19 The 488A KTU provides limited access to the CO/PBX lines. One 488A KTU is required for each two lines to perform the following functions:

- Isolate the 6B KTS from CO/PBX line potentials
- Detect and acknowledge supervisory signals from the line
- Transfer control information on the A and L leads from the CO/PBX line circuit to the controller circuit.

The 488A KTUs are installed in jacks J19, J21, J23, and J25, as required. These KTUs occupy double-width jack positions.

F. 489A KTU—TOUCH-TONE Decoder Circuit

2.20 The 489A KTU performs the function of interpreting the tone address signals from the station dial. The frequency detectors of the 489A KTU convert the information to bits which are processed by the controller circuit. The controller resets the TOUCH-TONE receiver after each dialed digit in preparation for subsequent dialing. The optional 489A KTU is installed in J1.

184C1 BACKBOARD

2.21 The optional 184C1 backboard (Fig. 3) consists of a yellow backboard equipped with a 14A2-125 terminal block, providing terminations for eight CO/PBX lines and 20 stations (Fig. 4). Space is provided for the addition of two more terminal blocks which must be separately ordered. Addition of the second block adds capacity for 25 more stations. Addition of the third block adds the final stations. The 184C1 backboard offers a convenient method of grouping the 6B KTS terminations, but is not required if the yellow field of a centralized key system installation can be utilized.

2.22 The 14A2-125 terminal blocks used with the 184C1 backboard consist of a 66-type connecting block wired to five microribbon plugs. The plugs accept A25B connector cables to provide connections between the backboard and the 572A1 KSU. The layout of the 184C1 backboard and the plugs to be used in connecting to the 572A1 KSU is shown in Fig. 4. All station connections and the A and lamp leads from the station side of the line circuits are made on the terminal blocks of the 184C1 backboard. Tip and ring of the CO/PBX lines (from ahead of the line circuit) are fed through a separate cable to P13 on the KSU.

3. INSTALLATION

ORDERING GUIDE

A. Basic System

- Unit, Key Service, 572A1—one required per system. Where desired, the 572A1 KSU can be mounted in a 16C apparatus mounting with a 117C cover. These items must be separately ordered.

- Backboard, 184C1—equipped with one 14A2-125 terminal block. Order one per system when yellow field of centralized system is not used. Has terminations for eight CO/PBX lines (A and L leads) and 20 stations.

- Block, Terminal, 14A2-125—order one to add additional 25 stations to 184C1 backboard. Order second block to extend number of stations over 45.

- Cable, Connector, A25B—order as required for connections between 572A1 KSU and 184C1 backboard or yellow field. Cables used with 184C1 backboard must be double-ended.

- Unit, Key Telephone, 484A (station circuit)—order as required. Each KTU has circuitry for four stations.

- Unit, Key Telephone, 485A (controller circuit)—order one per system.

- Unit, Key Telephone, 486A (service circuit)—order one per system.

- Unit, Key Telephone, 487A (battery feed circuit)—order one per system. The KTU provides battery for two links. Order second KTU if four links are provided.

- D-180852 Kit of Parts—order one for each telephone set used with 6B KTS. Kit contains a 533F diode, a 150A designation strip (feature cue card for rotary dial), a 74A faceplate (feature cue card for TOUCH-TONE dial), and a station user card.

Note: The 150A designation strip and 74A faceplate can be ordered separately for maintenance purposes.

B. Optional Features

- Unit, Key Telephone, 487A—order one to increase to three and four links.

- Unit, Key Telephone, 488A (line interface circuit)—order as required to access CO/PBX lines. One KTU required for each two CO/PBX lines.

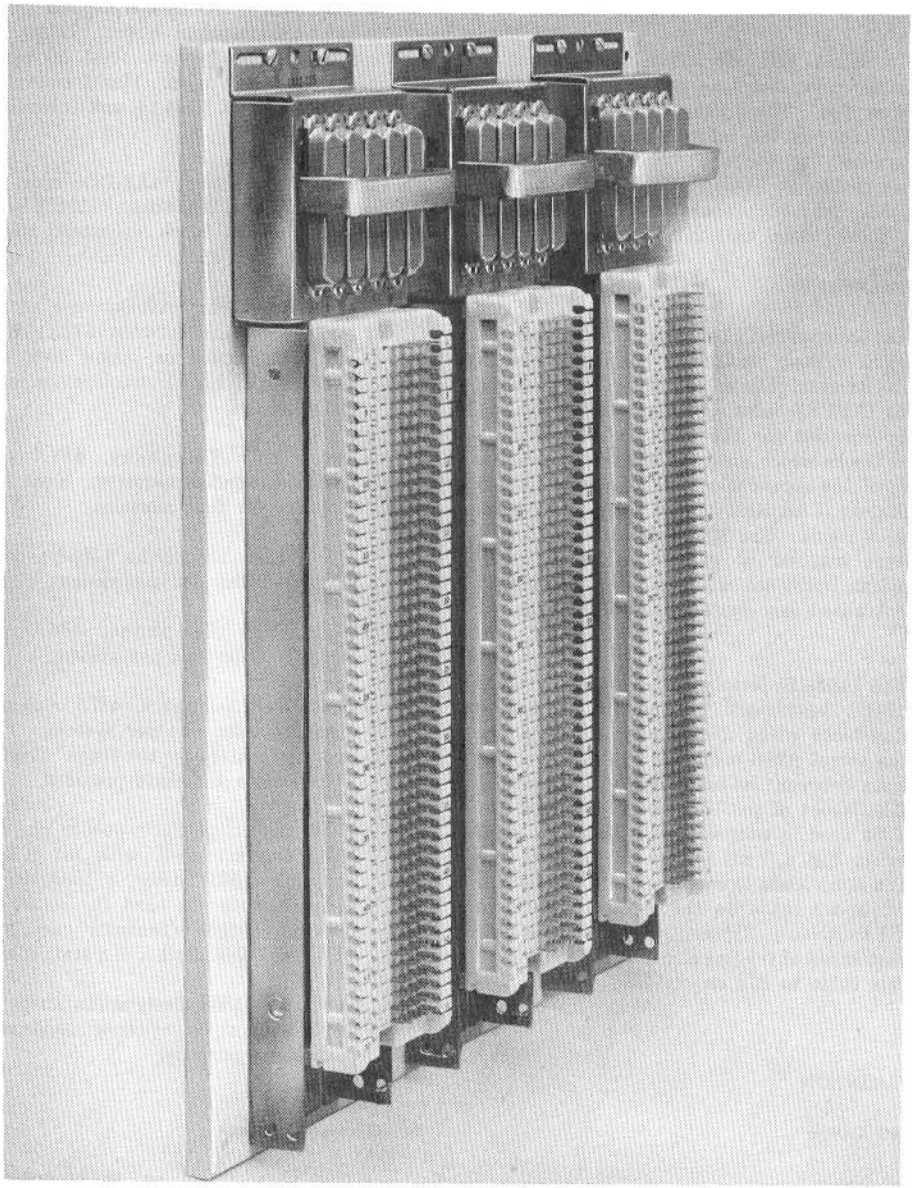

Fig. 3—184C1 Backboard Equipped With Three 14A2-125 Terminal Blocks

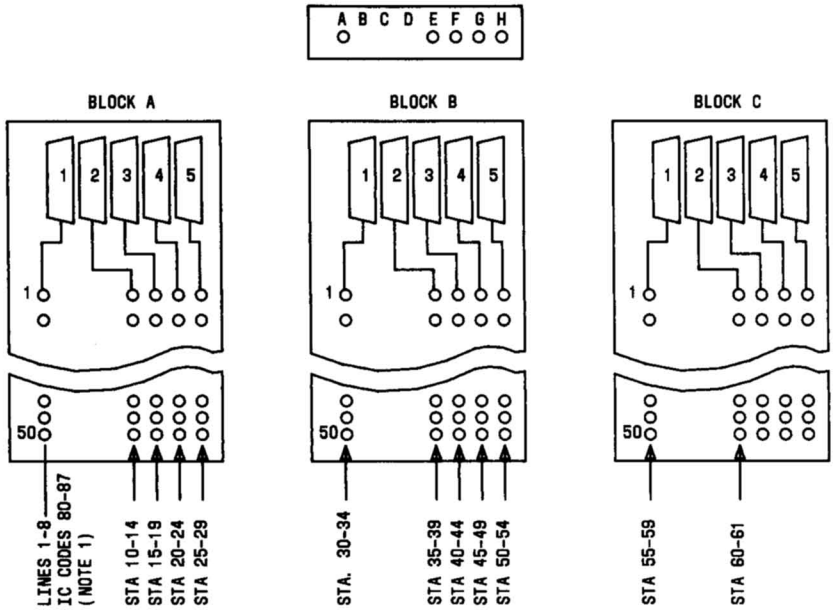

NOTES:
1. CONNECTOR 1 ON BLOCK A IS CONNECTED TO P12 ON REAR OF KSU.
2. CONNECTORS 2, 3, 4, 5 ON BLOCK A AND CONNECTORS 1, 2, 3, 4, 5 OF BLOCK B AND C SHOULD BE CONNECTED TO P1-P11 AS REQUIRED. SEE TABLE E FOR IC CODE TO 572A1 KSU PLUG ASSIGNMENT.
3. IN SMALL SYSTEMS USING ONLY BLOCK A AND HAVING PAGING, CONNECT CABLE FROM P9 OF KSU TO CONNECTOR 5 OF BLOCK A. IF BLOCK B IS LATER REQUIRED BECAUSE OF EXPANSION, CONNECT CABLE FROM P4 OF KSU TO CONNECTOR 5 OF BLOCK B TO ACCESS STATIONS 25-29. STATION CABLES FOR 25-29 MUST BE CUT DOWN ON BLOCK B.

Fig. 4—Layout of 184C1 Backboard

- Unit, Key Telephone, 489A (TOUCH-TONE decoder circuit)—order one per system.

- Unit, Power, 19- or 20-Type—order one per system when 24-volt dc and 10-volt ac cannot be obtained from associated KTS.

Note: The 6B KTS requires a maximum of 0.35 ampere at 24-volt dc and 0.17 ampere at 10-volt ac for the first six stations plus 0.04 ampere for each additional station. As a guideline for considering additional power requirements, installations under 25 stations should not require any supplementary power. Installations greater than 25 stations must be treated on an individual basis depending on the spare power available from the associated key system.

- Adapter, 278A—order one per paging zone (maximum of three).

- Transmitter-Receiver, 2A—order one for each station equipped with HFAI. Also order one 2012D transformer for each transmitter-receiver.

- ⧫Set, Telephone, 554BMS—order one for each rotary dial intercom-only wall telephone station.⧫

- ◗Set, Telephone, 2554BMS—order one for each TOUCH-TONE intercom-only wall telephone station.

- Set, Telephone, 500MM—order one for each rotary dial intercom-only desk telephone station.

- Set, Telephone, 2500MM—order one for each TOUCH-TONE intercom-only desk telephone station.

Note: If 500/2500MM telephone sets are not available, 502/2502BM telephone sets may be ordered as replacement.◖

- Mounting, Apparatus, 110A—order one for each two off-premises stations.

- ◗Unit, Key Telephone, 420A—order one for each off-premises station.

- Adapter, 324A—order one for each two loud or external ringer stations.◖

- Diode, 518A-surge protection for off-premises station—order two per station.

- ◗Panel, 642A.

- Block, Connecting, 92A.

- Buzzer, KS-20419, L1.

- Pack, Circuit, HK-14.◖

Note: If 6B KTS system has off-premises extensions, ringing voltage must be supplied to the 110A apparatus mounting from the associated key system.

572A1 KSU

3.01 The 572A1 KSU can be mounted in a 16C apparatus mounting, or in available space on a 23-inch relay rack or other suitable mounting. The KSU requires approximately 13 inches of vertical space. If the KSU is to be floor mounted in a 16C apparatus mounting, use a ED-95023-70 Group 10 floor stand. For information on other apparatus mountings, and associated mounting hardware, refer to Section 463-140-100. If a 117C cover is to be used with the 16C apparatus mounting, install the bracket supplied with the cover as follows:

(1) Position backboard of 16C apparatus mounting as desired and mark location of fasteners using double-ended keyhole slots. Gate can open to right or left.

(2) Install fasteners, letting heads protrude about 1/4 inch.

(3) Place mounting on fasteners.

(4) Before tightening top two fasteners, slide cover bracket between backboard and the mounting surface. The slots in the bracket should engage the top fasteners.

(5) Tighten all fasteners.

The center bar of the 16C apparatus mounting must be removed.

3.02 Incoming CO/PBX line connections and the required leads to the stations are brought into the KSU using A25B connector cables plugged into the rear of the KSU. The number of cables required will depend on the number and codes of the stations to be installed. The wiring between the jacks on the front of the KSU and the plugs on the rear are shown in Fig. 35, 36, 37, and 38. The plugs are marked P0 through P13. The P0 is dedicated to future expansion and is not used in this application.

3.03 The distant end of the connector cables from P1 through P12 can be terminated on the yellow field of a centralized key system distribution field; or a 184C1 backboard, which was designed for use with the 6B KTS, can be used. If the 184C1 backboard is used, these connector cables must have a connector at each end for connecting to the backboard and the KSU.

3.04 The connector cable from P13 contains the tips and rings of the incoming lines ***ahead*** of the line circuits and is routed to access these leads instead of to the 184C1 backboard.

3.05 Each connector cable from P1 through P10 of the 572A1 KSU contains the leads for five station codes—P11 contains the last two. Connector cables should be run between the KSU and the 184C1 backboard depending on the codes

required and as shown in Table E and Fig. 4. The one exception is when paging access is supplied. If the system is small enough, requiring only one connecting block ***and*** paging access is supplied, connect the cable from P9 of the KSU to connector 5 of block A (Fig. 39). Under this arrangement, station codes 25-29 cannot be used. If future expansion requires the addition of block B and the use of station codes 25-29, connect the cable from P4 of the KSU to connector 5 of block B. The cables from stations 25-29 must be cut down on column H of block B. If the original installation requires more than one block, the cables from the blocks to the KSU should be terminated as shown in Table E and Fig. 4.



If override is furnished, the coding of stations 10 through 19 can vary. If the override toggle switch is in the "10-19" position, the codes will be 10 through 19. If the switch is in the "10-11" position, codes 12 through 19 become 62 through 69 and must be designated and dialed as such. See Table A for the system code assignments.

3.06 The 572A1 KSU requires 24-volt B battery, B ground, 10-volt lamp battery and lamp ground from an external power source. The power source can be the power unit for the associated key system, or if of insufficient capacity, a separately provided source. The 6B KTS will require a maximum of 0.35 ampere at 24-volt dc and 0.17 ampere at 10-volt ac for the first six stations plus 0.04 amperes for each additional station.

> ***Note:*** As a guideline for considering additional power requirements, installations under 25 stations should not require any supplementary power. Installations greater than 25 stations must be treated on an individual basis depending on the spare power available from the associated key system.

3.07 Power is connected to the 572A1 KSU using the terminal block on the rear of the unit. Earlier production KSUs were equipped with a 6-terminal block. The top two terminals were marked "-5V" and "GRD." No connection should be made to these terminals. Current production KSUs will not have these terminals stenciled. The "SIG GRD" terminal in the KSU should be connected directly to the power supply SIG GRD (B ground) ***only.*** Likewise, the "AC GRD" terminal in the KSU should be connected to the 10-volt ac power supply ground ***only.*** The gauge of wire used is dependent on the distance between the power unit and the KSU as follows:

0-6 feet, use 18 gauge

6-10 feet, use 16 gauge

10-15 feet, use 14 gauge

15-25 feet, use 12 gauge.

3.08 The power unit frame is grounded through the green wire of the ac power cord and plug. The 206A power unit plug must be mated to a 3-prong ac outlet which is properly connected to the power supply service ground. When a properly grounded 3-wire outlet is not available, connect a No. 12 gauge ground wire to the FRAME GRD terminal on the rear of the 206A power unit and route it to the closest acceptable ground point. Refer to Fig. 1 for the location of the FRAME GRD terminal. For additional information on key system grounding, refer to Section 518-010-105.

KEY TELEPHONE UNITS

3.09 The KTUs should be installed in the designated jacks as shown in Fig. 2. Options are made using factory-supplied option plugs on the KTUs except for paging access and override stations which require positioning a toggle switch on the rear of the KSU. The system options and the method of application are shown in Table D.

TELEPHONE SETS

3.10 Any key telephone set that can be wired for A-lead control (except special purpose CALL DIRECTOR sets) can be used with the 6B KTS. Only one button appearance is required on the key telephone set, even though a maximum of four links may be available. Ten leads are required between each key telephone set and the KSU. The A1 lead is not required if it already appears in the set. Five of these leads (T, R, A, LG, and L) are associated with the button assigned to the 6B KTS. Two spare leads are required—one becomes the H lead and the other the B lead. A diode is installed in the B lead in the same manner as for station busy lamp. The B lead can be the lead normally used as the BL or any other spare

TABLE E

572A1 KSU PLUG AND 184C1 BACKBOARD CONNECTOR ASSIGNMENTS

PLUG ON 572A1 KSU	184C1 BACKBOARD			LEADS INVOLVED
	BLOCK A	BLOCK B	BLOCK C	
P0				Not Used
P1	Connector 2			Stations 10-14*
P2	Connector 3			Stations 15-19*
P3	Connector 4			Stations 20-24
P4	Connector 5			Stations 25-29
P5		Connector 1		Stations 30-34
P6		Connector 2		Stations 35-39
P7		Connector 3		Stations 40-44
P8		Connector 4		Stations 45-49
P9		Connector 5		Stations 50-54†
P10			Connector 1	Stations 55-59
P11			Connector 2	Stations 60-61
P12	Connector 1			A and L Leads for eight CO/PBX Lines
P13		See Note		Incoming T and R for CO/PBX Lines

Note: Cable from P13 is routed to access point for incoming CO/PBX lines—not to 184C1 backboard.

* If override switch on rear of 572A1 KSU is in "10-11" position, codes 12-19 become 62-69.

† If paging access switch on rear of 572A1 KSU is operated to ON position, codes 50-53 become 70-73.

lead. The last two leads required are the BZ and BZ1 which are connected to a 10-volt ac buzzer. If the key telephone set is not equipped with a separate 10-volt ac buzzer, one must be separately ordered and installed. The set ringer cannot be used as the 6B KTS audible signal ⧫unless used with a 324A adapter⧫ .

3.11 The telephone sets used with the 6B KTS ⧫(except the 554/2554BMS sets)⧫ must be modified to connect the normally open contact on the HOLD key to the H lead and a diode added and connected in the same manner as for the busy lamp feature. In CALL DIRECTOR sets, the set of HOLD key contacts normally used for 1A KTS are substituted for those factory wired. The factory-wired contacts are then insulated and stored. The general purpose key sets and CALL DIRECTOR sets as modified are shown in Fig. 5. Refer to Section 502-110-102 for conversion of wall telephone sets.

3.12 If nonkey telephone sets are required (intercom only), ⧫554/2554BMS wall telephone sets have

564HD (MD), HK (MD), HL TELEPHONE SETS

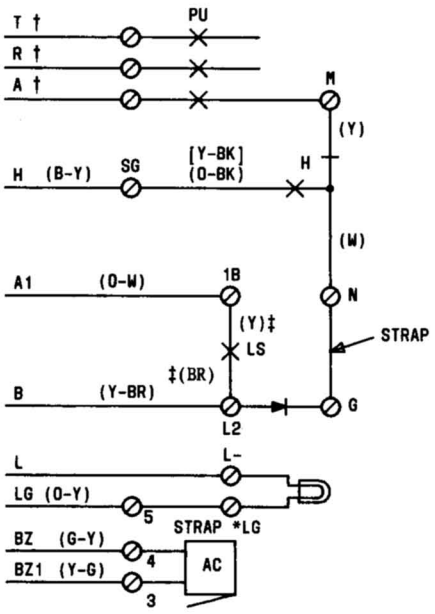

6B KTS MODIFICATION OF 564HD (MD), HK (MD), HL TEL SETS			
UNIT	LEAD	FROM	TO
HOLD KEY	[Y-BK] (O-BK)	N	SG
LINE SWITCH	(BR)	N	L2
LAMP ASSEMBLY	STRAP	COMMON	LG-5*
TERMINALS	STRAP	–	N-G
533F DIODE		–	L2→|–G

LEGEND:
LS - LINE SWITCH
HS - HEADSET JACKS
CS - CHAINING SWITCH
H - HOLD KEY

* ON THESE TEL SETS, THE LAMP GRD MUST BE SEPARATED FROM THE COMMON LAMP GRD., AND RUN SEPARATELY ON THE O-Y (SPARE) LEAD

† ON THE 564HD (MD) TEL SET, THE FIRST LINE PU KEY MUST BE USED FOR THIS MODIFICATION

‡ THESE COLORS ARE FOR LATE MODEL 564HK (MD) AND HL SETS, EARLY MODEL HK (MD), HL AND 564HD (MD) SETS USED (S-W) IN PLACE OF (Y) AND (S-G) IN PLACE OF (BR)

[ ] COLOR OF LEAD IN 564HD (MD)

Fig. 5—Modification of Key Telephone Sets for Use With 6B Key Telephone System (Sheet 1 of 6)

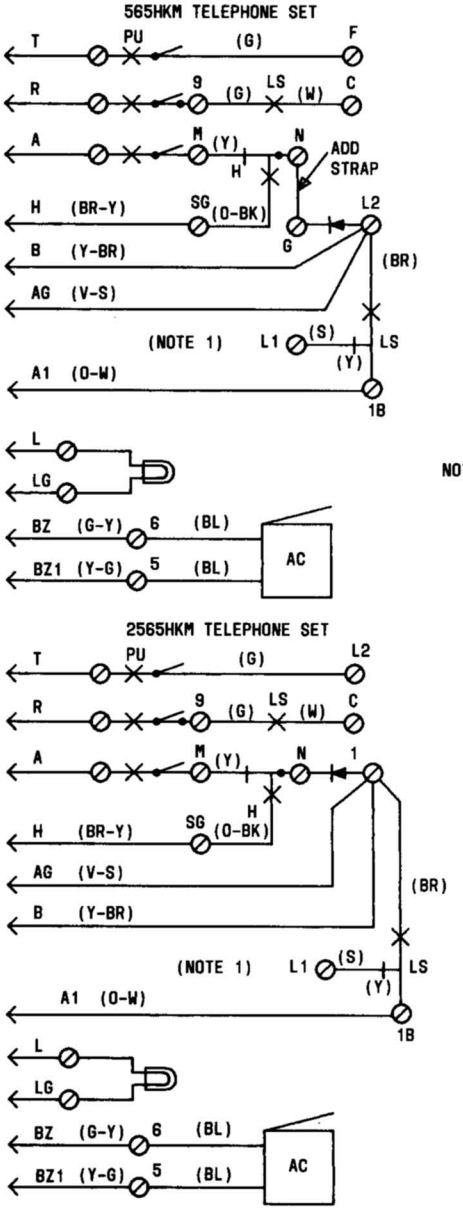

6B KTS MODIFICATION OF 565HKM		
LEAD	FROM	TO
O-BK	N	SG
V-SL	N	L2
BR	N	L2
ADD STRAP	-	N-G
533F DIODE	-	L2→G
BUZZER	-	5 AND 6

NOTE 1:
FOR 4A SPEAKERPHONE (WITH ADAPTER TERMINATED IN SET) MOVE LEAD IN M16C CORD AS FOLLOWS:

SET	LEAD	FROM	TO
565HKM	W-O	N	L2
2565HKM		N	1
630D, 631D 2630D, 2631D		5	6
630DAM, 2630DAM 631DAM, 2631DAM	BL-W	13	L2

6B KTS MODIFICATION OF 2565HKM		
LEAD	FROM	TO
O-BK	N	SG
V-SL	N	1
BR	N	1
533F DIODE	-	1→N
BUZZER	-	5 AND 6

Fig. 5—Modification of Key Telephone Sets for Use With 6B Key Telephone System (Sheet 2 of 6)

630D, 631D, 2630D, 2631D TELEPHONE SETS

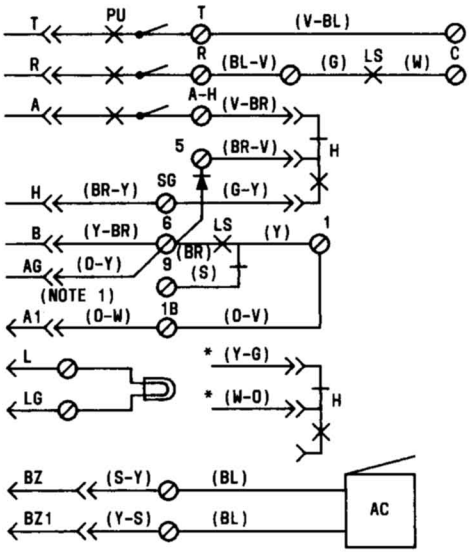

6B KTS MODIFICATION OF 630D, 631D, 2630D, 2631D		
LEAD	FROM	TO
Y-G	A-H	INSULATE & STORE
W-O	5	INSULATE & STORE
V-BR	SPARE	A-H
BR-V	SPARE	5
GR-Y	A-H	SG
BR	5	6
533F DIODE	-	6→|-5
BK	3	INSULATE & STORE
BUZZER	-	SPARE TERMINALS
O-Y	SPARE	6

630DAM, 631DAM, 2630DAM, 2631DAM TELEPHONE SETS

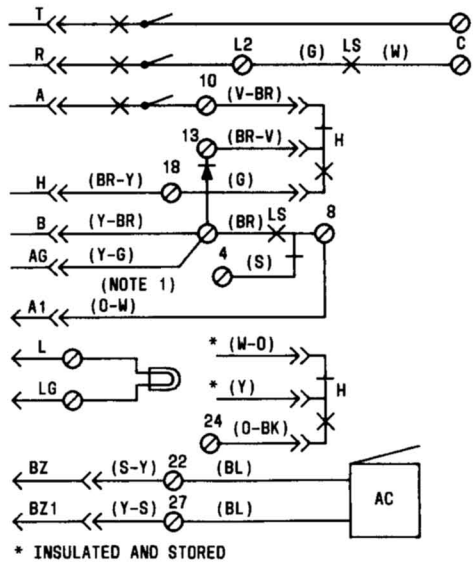

* INSULATED AND STORED

6B KTS MODIFICATION OF 630DAM, 631DAM, 2630DAM, 2631DAM		
LEAD	FROM	TO
W-O	7	INSULATE & STORE
Y	10	INSULATE & STORE
Y-BR	L2	7
R1 AND R2	13	L2
G	13	L2
G	10	18
V-BR	SPARE	10
BR-V	SPARE	13
Y-GR	SPARE	7
533F DIODE	-	7→|-13
BUZZER	-	22 AND 27

Fig. 5—Modification of Key Telephone Sets for Use With 6B Key Telephone System (Sheet 3 of 6)

636/2636CA, CAM, AND 637, 2637DA, DAM TEL SETS

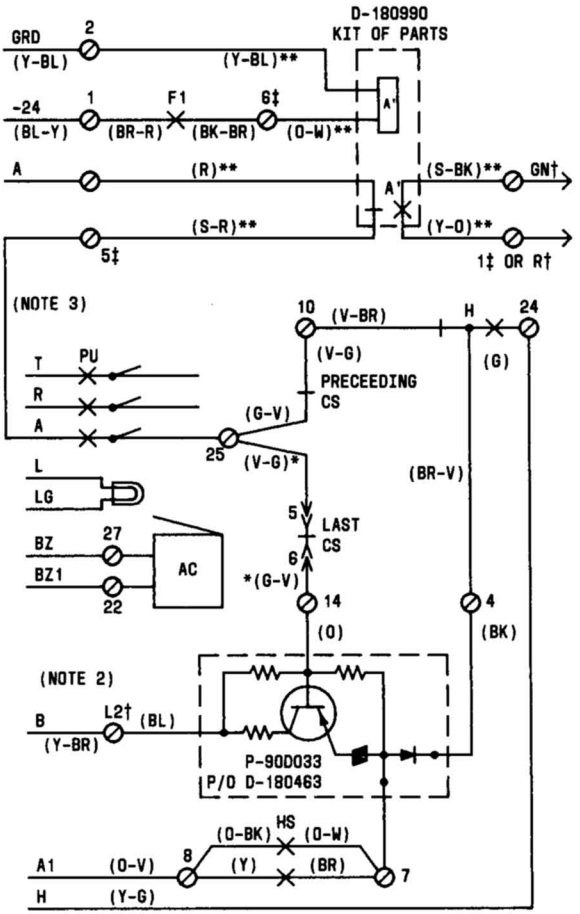

6B KTS MODIFICATION OF 636/2636 CA, CAM, AND 637/2637 DA, DAM TEL SETS			
UNIT	LEAD	FROM	TO
HOLD KEY	(W-O)	7	INSULATE STORE
HOLD KEY	(Y)	10	INSULATE STORE
HOLD KEY	(O-BK)	24	INSULATE STORE
HOLD KEY	(V-BR)	SPARE	10
HOLD KEY	(BR-V)	SPARE	4
HOLD KEY	(G)	10	24
PLUG #1	(Y-G)	SPARE	24
ASSIGNED P.U. KEY	A	TERM	5‡
FL KEY	(BR-R)	1‡/R† NOTE 4	1
FL KEY	(BK-BR)	GN†	6‡
D-180463 KIT OF PARTS			
P-900033	(BK)	–	4
"	(Y)	–	7
"	(BL)	–	L2†
"	(O)	–	14
840361836 PLUG ASS. LEAD	(V-G)	CS5 TO 25	
" " "	(G-V)	CS6 TO 14	
D-180990 KIT OF PARTS			
A' WINDING	(Y-BL) **	–	2
A' WINDING	(O-W) **	–	6‡
A' BREAK	(R) **	–	A LEAD TERMINAL
A' BREAK	(S-R) **	–	5‡
A' MAKE	(S-BK) **	–	GN†
A' MAKE	(Y-O) **	–	1‡/R† NOTE 4

NOTES:
2. B LEAD FOR 6B KTS ONLY, IF A STATION BUSY CONSOLE IS USED. A SECOND D-180463 KIT OR PARTS MUST BE INSTALLED IN PARALLED WITH THE FIRST EXCEPT FOR THE BLUE LEAD ONE BLUE LEAD WOULD GO TO THE STATION BUSY CONSOLE AND THE OTHER TO THE 6B KTS.
3. FOR THIS MODIFICATION, 6B KTS MUST BE ON P.U. KEY 5 OF FIRST MODULE OR P.U. KEY 5 OR 6 ON SECOND THRU FIFTH MODULES.
4. FL KEY IS CONNECTED TO 1‡ ON 636/637 SETS AND TO R† ON 2636/2637 SETS.

LEGEND:
P.U. - PICK UP KEY
FL - FLASH KEY
LS - LINE SWITCH
HS - HEADSET JACKS
CS - CHAINING SWITCH
H - HOLD KEY
* - 840361836 PLUG ASSEMBLY LEADS. P/O D-180463 KIT OR PARTS
** - SPADE TIP LEADS FROM D-180990 KIT OF PARTS
† - NETWORK TERMINALS
‡ - AMPLIFIER BOARD TERMINALS

Fig. 5—Modification of Key Telephone Sets for Use With 6B Key Telephone System (Sheet 4 of 6)

830, 2830, 831, 2831 TELEPHONE SETS (EXCEPT DM-TYPE)

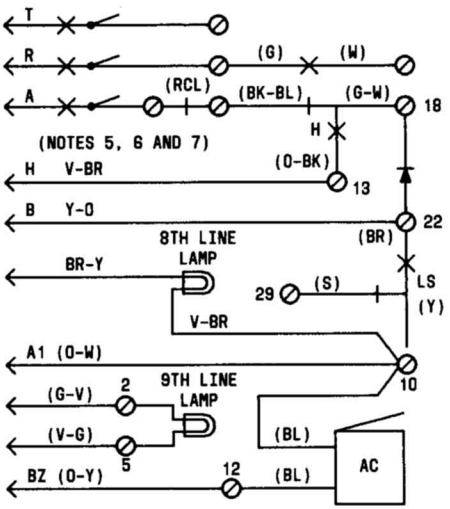

6B KTS MODIFICATION OF 830, 2830, 831, 2831, (EXCEPT DM)		
LEAD	FROM	TO
G-W	22	18
553F DIODE		22 → 18
B (Y-O)	14	22
H (V-BR)	4	13
BUZZER	12 AND 14	12 AND 10
LG (V-BR) LINE 8	4	10

NOTES:
5. FOR THIS MODIFICATION, 6B KTS MUST BE ON 9TH P.U. KEY.
6. IF SPEAKERPHONE POWER (4A) IS SUPPLIED FROM ASSOCIATED KEY SYSTEM, USE SPARE PAIR OTHER THAN (Y-O) (O-Y) AND CONNECT THEM TO THE (R-G) (G-R) IN THE M16C CORD USING SPARE TERMINALS OR D-161488 CONNECTORS.
7. RECALL CONTACT IN "A" LEAD IS ONLY IN FM TYPE SETS.

LEGEND:
LS - LINE SWITCH
HS - HEADSET JACKS
CS - CHAINING SWITCH
H - HOLD

Fig. 5—Modification of Key Telephone Sets for Use With 6B Key Telephone System (Sheet 5 of 6)

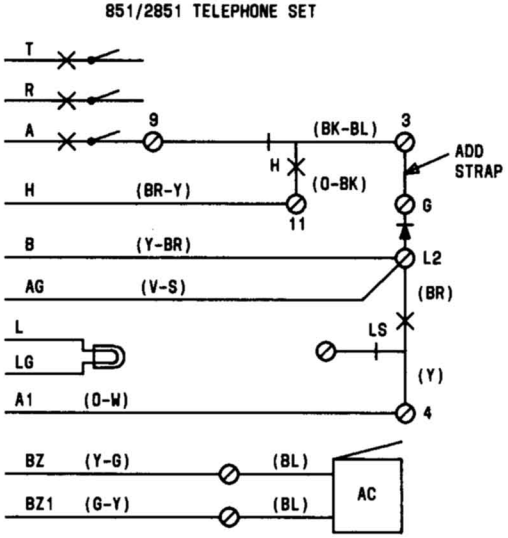

6B KTS MODIFICATION OF 851/2851 TEL SET		
LEAD	FROM	TO
A (G-W)	3	9
(O-BK)	3	11
AG (V-S)	3	L2
(BR)	3	L2
(BK-BL)	9	3
STRAP	–	3 TO G
DIODE	–	L2→|– G

872A1M, 2872A1M, 2872A2M TELEPHONE SETS (NOTE 8)

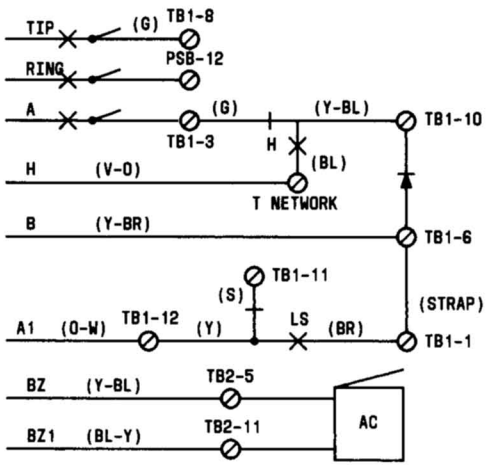

NOTE:
8. NOT COMPATIBLE WITH ONE-TOUCH CALLING FEATURE

6B KTS MODIFICATION OF 872A1M, 2872A1M, OR 2872A2M TEL SET		
LEAD	FROM	TO
Y-BL	TB1-3	TB1-10
G	TB1-1	TB1-3
STRAP	–	TB1-6 TO TB1-1
BL	SPARE	T(NETWK)
BUZZER	–	TB2-5 TB2-11

Fig. 5—Modification of Key Telephone Sets for Use With 6B Key Telephone System (Sheet 6 of 6)

been developed especially for 6B KTS and need no modification. If a nonkey desk-type telephone set is required (intercom only), the 500/2500MM set with six conductor (D6AM) mounting cords, the 502/2502BM telephone set, or the TRIMLINE telephone may be modified per Fig. 6 for use with the 6B KTS. The 10-volt ac buzzer must be separately ordered and installed. Wiring of the 554BMS telephone set is shown in Fig. 7 and the wiring of the 2554BMS telephone set is shown in Fig. 8◀ .

3.13 The station lead cutdown for the 184C1 backboard is shown in Fig. 36, 37, and 38. The variation of wiring for paging access is shown in Fig. 39.

3.14 TOUCH-TONE telephone sets can be equipped with a 74A faceplate and rotary sets with a 150A designation strip. The 74A faceplate is a clear plastic overlay that fits over the buttons of a TOUCH-TONE dial (Fig. 9). The 150A designation strip is a stick-on label to be located on a rotary set housing between the switchhook plungers (Fig. 9) or on the breakover of the housing beneath the dial. The lettering on the faceplates or designation strips is associated with the buttons or finger holes according to the code to be dialed for dial-activated features. The desired code must be preceded by a digit 0. For instance, to activate call forwarding, the code 02 is dialed. Refer to Table A for system code assignments.

3.15 Stations having the HFAI feature must be equipped with a 2A transmitter-receiver adjunct. The cord of the adjunct can be wired directly to the telephone set terminals or to a separately supplied 66E8-25 connecting block. ▶The intercom buzzer must be disconnected.◀ A 2012D transformer may be used to power each adjunct. Typical adjunct to telephone connections is shown in Fig. 10. For further information on the 2A transmitter-receiver, refer to Section 518-010-115.

Note: Tip and ring ***to the adjunct*** must be reversed for proper operation of S HOLD.

Caution: The 2A transmitter-receivers, used with the 6B KTS, must bear a manufacture date of May 1978 or later. Earlier manufactured models will cause customer complaints of low volume.

OFF-PREMISES EXTENSIONS

3.16 Off-premises extensions from the 6B KTS can be provided using a 420A KTU (long-line circuit). The maximum station conductor loop is 500 ohms. A separate mounting must be provided for the 420A KTU(s). For one or two circuits, use a 110A apparatus mounting—for a larger number of circuits use a 642A panel. The necessary voltages can be obtained from the associated key system if sufficient capacity is available. Connections for an off-premises station are shown in Fig. 40.

3.17 ▶If power source for 642A panel is a 19-, 20-, 29-, or 30-type power unit, the installer should use a 92A connecting block as shown in Section 518-215-419.

EXTERNAL SIGNALING OR LOUD RINGING BELLS

3.18 External signaling or loud ringing bells in the station set may be provided in the 6B KTS with the addition of a 324A adapter. The 324A adapter is a wall-mounted unit approximately 2-5/8 inches wide, 5-1/2 inches high, and 3-inches deep. It consists of two power relays and a terminal strip assembled on a metal plate, which in turn, is mounted on an insulating base and has a plastic screw down cover. Each power relay will service one station. The relays are operated with 10 volts at 60 Hz and have a single-make contact. Connections are shown in Fig. 41.◀

4. OPERATION—STANDARD FEATURES

INTERCOM LINE PICKUP AND HOLD

4.01 Intercom calls are originated by depressing the designated button on the telephone set. Only one button appearance is required in either single link or multilink systems. Only the calling and called stations enter into an intercom call, unless special features such as conferencing, call add-on, or override are used. Intercom calls are processed through the controller circuit (485A KTU) with tones supplied by the service circuit (486A KTU) and talk battery by the battery feed circuit (487A KTU).

4.02 To make a station-to-station intercom call:

(1) Depress line pickup button associated with intercom.

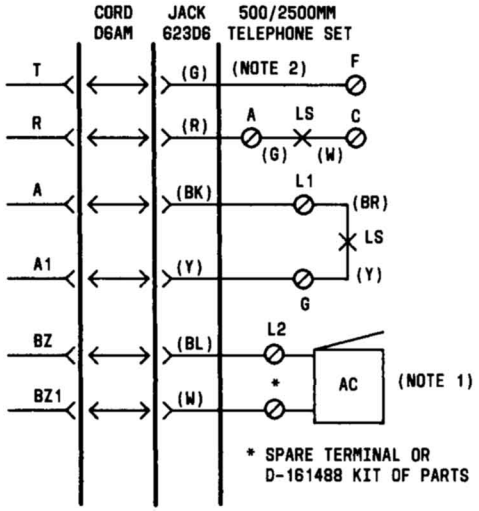

6B KTS MODIFICATION OF 500/2500MM TEL SETS		
LEAD	FROM	TO
BL	SPARE	L2
W	SPARE	D-161488
BUZZER	ORDER	L2 AND *
BK	F	INSULATE STORE
R	K	INSULATE STORE

NOTES:
1. 10V AC BUZZER MUST BE ORDERED SEPARATELY
2. REPLACE MODULAR JACK WITH 623D6 JACK IF NOT FURNISHED

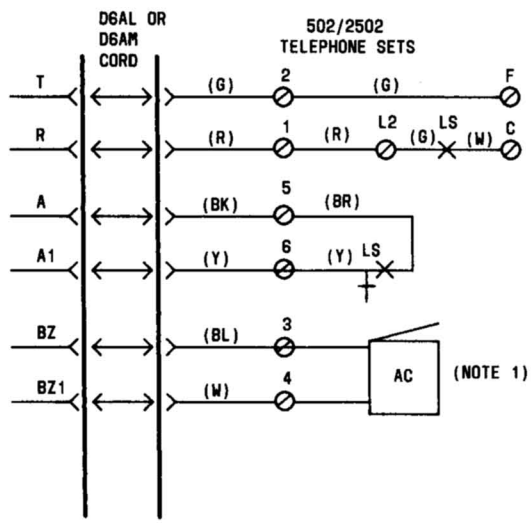

6B KTS MODIFICATION OF 502/2502 TEL SETS		
LEAD	FROM	TO
BK	2	INSULATE & STORE
S	1	INSULATE & STORE
BK	L1	INSULATE & STORE
Y	L2	INSULATE & STORE
BUZZER	ORDER	3 AND 4

Fig. 6—Modification of Nonkey Telephone Sets for Use With 6B Key Telephone System (Sheet 1 of 2)

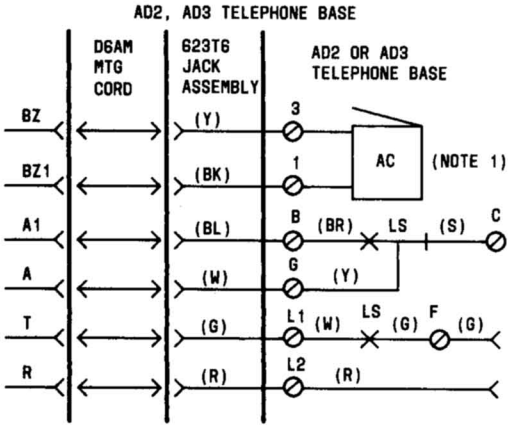

† INSULATE AND STORE
†† INSULATE AND STORE (AD2 ONLY)

6B KTS MODIFICATION OF AD2 AND AD3 BASES				
WRITE OR LEAD	LEAD DESIG	COLOR	BASE TERMINAL BOARD	
			REMOVE FROM	CONNECT TO
623TG JACK (NOTE)	RING	R		L2
	TIP	G		L1
	BZ	Y		3
	BZ1	BK		1
	A1	BL		B
	A	W		G
LINE SWITCH	A1	BR	C	B
	A	Y	L2	G
		S	A	C
		BL	1	†
RINGER		S	B	†
		S-R	G	†
STRAP		BK	A	L2
HANDSET CORD JACK IN BASE		R	C	L2
		W	B	††
DIAL LAMP		Y	3	†
BUZZER				1 & 3

Fig. 6—Modification of Nonkey Telephone Sets for Use With 6B Key Telephone System (Sheet 2 of 2)

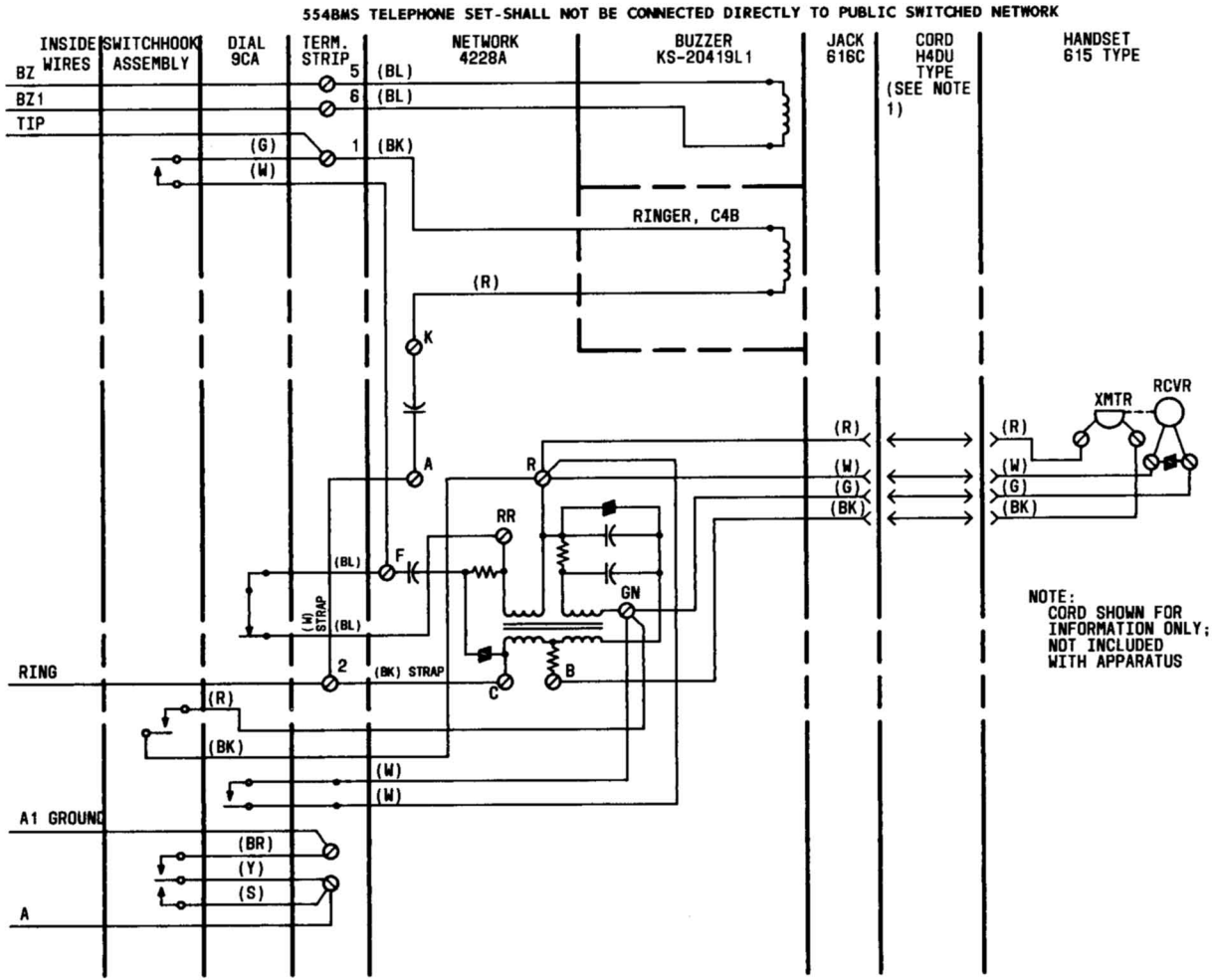

Fig. 7—Wiring of 554BMS Telephone Set

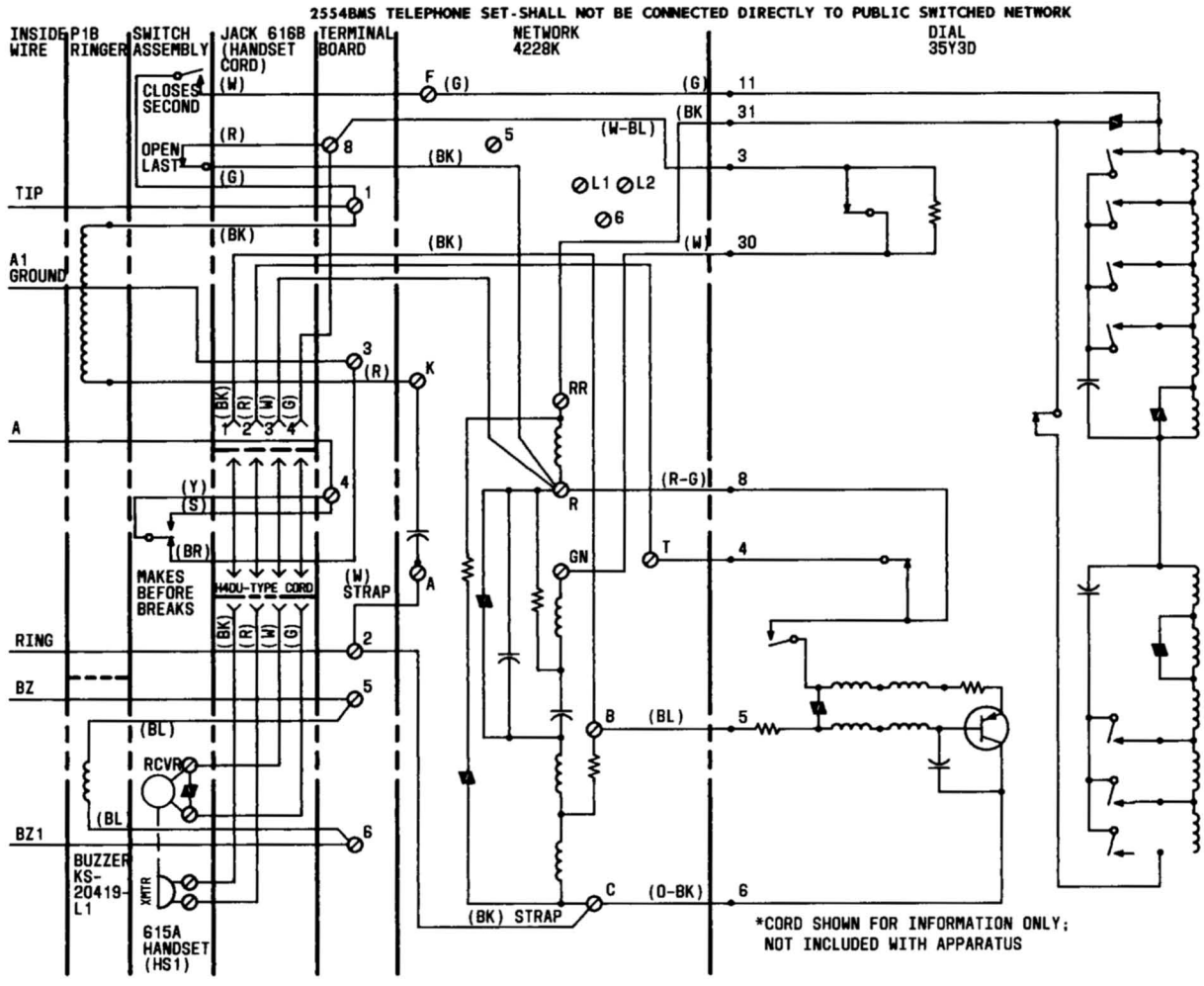

Fig. 8—Wiring of 2554BMS Telephone Set



150A DESIGNATION STRIP

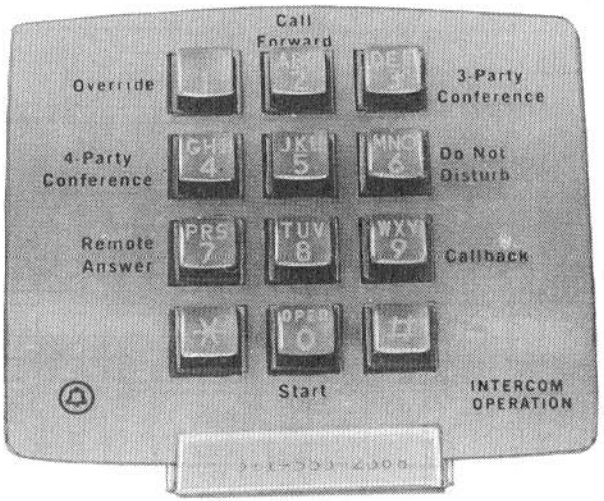

74A FACEPLATE

Fig. 9—Application of 150A Designation Strip and 74A Faceplate

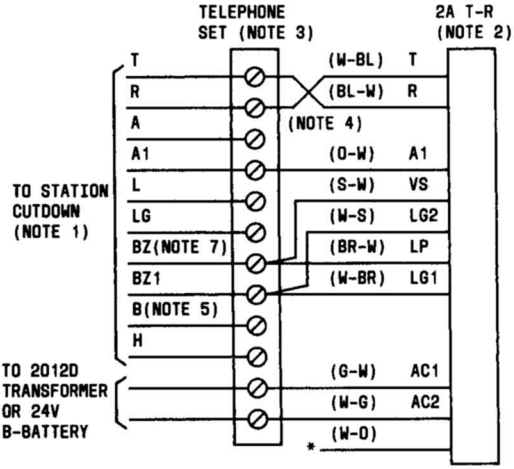

* INSULATE AND STORE

NOTES:

1. TERMINATE ON TERMINALS FOR STATION CODE ASSIGNED ON 184C1 BACKBOARD OR YELLOW FIELD.
2. IF TELEPHONE SET IS EQUIPPED WITH SCREW TERMINALS, D10W CORD FROM 2A TRANSMITTER-RECEIVER CAN BE TERMINATED DIRECTLY IN SET. WHERE SCREW TERMINALS ARE NOT AVAILABLE, SUCH AS IN CALL DIRECTORS, USE 66E3-25 OR 66E8-25 CONNECTING BLOCK TO ACCESS PROPER LEADS.
3. T, R, LP, AND LG ARE LEADS ASSOCIATED WITH PICKUP BUTTON ASSIGNED TO 6B INTERCOM.
4. T AND R TO 2A TRANSMITTER - RECEIVER MUST BE REVERSED.
5. DISCONNECT B LEAD FOR OPERATION OF HFAI UNIT WHEN STATION IS OFF-HOOK ON CO/PBX LINE
6. ADD CONTINUOUS RING OPTION TO 484A KTU.
7. REMOVE BUZZER FROM TEL SET.
8. ADD SINGLE-SPURT AUDIBLE RINGBACK OPTION TO 486A KTU.

Fig. 10—Connections Between 2A Transmitter-Receiver and Telephone Set for HFAI

Note: Button should be dark—if lit steady, system is busy and no links are available.

(2) Lift telephone handset. Lamp should light steady and intercom dial tone heard. Refer to Table B for call progress tones.

(3) Dial desired 2-digit station code. Lamp associated with intercom at called station will flash and 10-volt ac audible signal will operate. Audible ringback is heard at the calling station.

Note: If the called station is busy on intercom (handset off-hook), the calling station will hear the busy signal. If the called station is busy on a CO/PBX call (handset off-hook) the calling party will hear audible ringback and the called station will have a flashing intercom lamp. The intercom audible signal at the called station will be blocked.

(4) When called station answers, the flashing lamp goes steady and the audible signal is

silenced. Two-way private conversation is now possible.

(5) When both stations restore their handsets, the link returns to normal and both lamps go dark.

4.03 With a talking circuit established as in paragraph 4.02(4), the intercom call can be placed on station hold (S HOLD) by depressing the HOLD key on the telephone set. The lamp at the ▶holding◀ station will wink and the associated pickup button will restore. The S HOLD cannot be activated by the following:

- Calling stations before the called station answers
- Called station in consultation hold (C HOLD)
- Intercom-only stations
- Paging calls.

SUPERVISORY FLASH FEATURES

4.04 Consultation hold (C HOLD), call add-on (CADD), and call transfer (XFER) are features activated by breaking the calling party A lead using the line switch. The flash must take place with the intercom call in the talk mode with the duration of the flash from 275-ms to 1.5 seconds. If the flash is too short, no action will take place, and if too long, disconnect will occur.

4.05 To activate supervisory flash features:

(a) Assume station 20 is talking to station 30 and station 20 flashes (either station could initiate flash). Station 30 is put on hold (C HOLD) and hold tone followed by dial tone is returned to station 20.

(b) Station 20 may now dial a third station (assume station 40) for consultation. Station 30 does not hear the conversation.

(c) At this point:

(1) Station 20 may flash a second time to return to the original connection with station 30. Station 40 leaves the call by going on-hook.

(2) Either 20 or 40 can flash a second time to add 30 to the conversation (CADD), or

(3) Station 20 may disconnect from call by going on-hook, leaving 30 connected to 40 (XFER).

Supervisory flash cannot be used to activate paging, flexible conferencing, or remote answer ▶of intercom call◀ .

> ***Note:*** If the station originating C HOLD hangs up before the third station answers, the 6B KTS calls the originating station back. This prevents the held station being accidentally forgotten. ▶Dial-activated features should not be invoked while in supervisory flash mode.◀

DIAL-ACTIVATED FEATURES

4.06 The 6B KTS can furnish both standard and optional features activated by dialing a 2-digit access code (Table A) and, where required, the station code(s) to which the feature is directed. The standard dial-activated features are flexible dial conferencing (FLEX), do-not-disturb (DND), call forwarding (CFWD), automatic callback (ACBK), remote answer (REAN), and override (OVRD).

> ▶***Note:*** Dial-activated features should not be invoked while in the switchhook flash mode.◀

A. Flexible Dial Conferencing

4.07 Conferencing on intercom of either three or four parties (including originator) can be set up by any 6B KTS station. To set up a conference call of two stations plus the originating station (assume station 20 wants to conference with stations 30 and 40):

(1) Depress intercom button (button should be dark)

(2) When first dial tone is received, dial access code 03

(3) When second dial tone is received, dial code of one station to be conferenced (30)

(4) When third dial tone is received, dial code of other station to be conferenced (40)

(5) Audible ringback will be heard by station 20 and audible signals will operate at 30 and 40

(6) When conference stations answer, talk path is established to all parties.

Note: If either of the conference stations do not answer, the ▶audible signal◀ will time out after approximately 12 seconds. However, the lamp will continue to flash at the unanswered station for the duration of the conference call. The unanswered station may enter the call at any time while the lamp is flashing.

If a busy station (off-hook) is encountered while setting up a conference call, busy tone will be returned to the originator and the call procedure terminated. Only station codes (10 through 69) can be dialed in setting up conferences. If a feature, paging, or CO/PBX access code is dialed, error tone will be returned when the invalid code is dialed.

4.08 The procedure for setting up a 4-party conference call is the same as covered in paragraph 4.07 except that the access code is 04. One additional dial tone will be received to permit dialing the fourth station before all stations are rung.

4.09 No cancellation of this feature is required. The circuit returns to normal when all parties go on-hook.

B. Do-Not-Disturb (DND)

4.10 With the DND feature in effect, all 6B KTS audible signals at the station activating the feature are silenced. On incoming calls, the lamp on the intercom button will flash as an indication that the feature is in effect. All stations can originate DND. The automatic callback feature cannot be used while a called station is in DND.

4.11 Operation of DND is as follows:

(1) The feature is put into effect by dialing the access code 06 from the station desiring the feature. Acknowledgment tone is returned to the user to indicate the feature is in effect. The station can then hang up or switchhook flash to originate another call.

(2) Incoming calls to a DND station will be indicated by a flashing lamp at the DND station. The calling station will hear busy tone. The DND station can elect to answer the flashing lamp or ignore it.

Note 1: Station codes 10 through 19 have the capability to override the DND feature upon receiving the busy tone. Refer to the override feature.

Note 2: If a station activates DND after it becomes an alternate station for the call forwarding feature (see paragraph 4.12) it will receive forwarded calls in a normal manner, but if the code of the station is dialed directly, the calling station will hear busy tone.

(3) To cancel the feature, the station code of the station originating DND must be dialed ***from the originating station.*** For example, if station 20 has DND in effect, to cancel DND, 20 is dialed from station 20. Acknowledgment tone is heard at the station to indicate the feature is canceled.

Note: Selective cancellation is not possible, ie, if a station has more than one dial-activated feature in effect, cancellation of one feature will cancel all others in effect for that station.

C. Call Forwarding

4.12 With this feature, calls intended for a user's station can be routed to an alternate station. The audible and lamp signals will operate at both the originating and alternate stations but the originating station can answer the call with the feature in effect. All calls for the originating station will be forwarded. If the alternate station is busy, the calling station will receive a busy signal even though the originating station is idle. Calls for the originating station will be forwarded to the alternate even if the alternate activates DND after call forward is activated. ***A station cannot be set up for call forwarding and automatic callback at the same time.*** An attempt to activate one with the other in effect will result in error tone. Up to 16 call forwarding indications can be handled by the 6B KTS. Additional attempts will result in error tone. More than one connection can go to the same alternate station. The system will not forward to more than one alternate, ie, station 20 cannot have calls forwarded

to both stations 30 and 40 at the same time. Also, calls for station 20 can be forwarded to 30, station 30 can forward to 40 but station 20 will not forward to 40.

4.13 Assuming station 20 wants to forward calls to station 30, the sequence is as follows:

(1) Station 20 goes off-hook on the intercom, receives first dial tone, and dials 02.

(2) When second dial tone is received, station 20 dials 30.

Note: If originating station is already in CFWD, the system will update to the new alternate. If the alternate station is in DND, station 20 will receive busy tone. If alternate selected is not a working station or a nonstation code is dialed (such as a feature code), error tone will be returned.

(3) Station 20 hears acknowledgment tone indicating feature is in effect.

(4) With CFWD in effect, when station 20 is dialed, the call is terminated at station 30. The audible and visual signals will operate at both stations. The audible signal at the ⧫call-forwarding⧫ station will time out after 12 seconds.

(5) To cancel CFWD, the station code of the ⧫call-forwarding⧫ station must be dialed ***from the originating station.***

D. Call Forwarding—Do-Not-Disturb

4.14 When these two features are put into effect in sequence, calls will be forwarded as described, but no signals will be received at the ⧫call-forwarding⧫ station. With CFWD alone, audible and lamp signals are received at both stations. To affect, activate CFWD as shown in paragraph 4.12 then DND as shown in paragraph 4.10. Canceling either feature will cancel the other.

AUTOMATIC CALLBACK (ACBK)

4.15 Automatic callback (ACBK), when activated by a user who has dialed a busy station, will automatically attempt to establish the connection when both stations become idle and a link is available. For instance, if station 20 receives a busy in calling station 30 and if station 20 activates ACBK, the system will call back station 20 when station 30 becomes idle, then ring station 30. The system can process up to eight requests for ACBK. The ninth request will result in busy tone indicating memory is unavailable. A station can originate only one ACBK call at a time, but the called party can receive more than one ACBK call. An attempt to originate more than one ACBK call at a time will result in error tone.

4.16 The called station in an ACBK connection cannot be a station in the DND mode, a paging access code, or a CO/PBX access code (results in error tone). If the ***calling*** station has activated call forwarding to another station in addition to ACBK, the ACBK call will still go to the ***calling*** station. If the ***called*** station is call forwarding, the ACBK call will be forwarded to the alternate station.

4.17 Once originated, the ACBK feature stays in effect until (a) the callback call is completed, (b) the feature is canceled by the originating station, or (c) the system attempts ACBK and the originating station does not answer in approximately 16 seconds.

4.18 The automatic callback feature operates as follows:

(1) Assume station 20 is calling station 30 and receives a busy tone.

(2) Station 20 flashes the switchhook to obtain dial tone again, dials 09, and when a second dial tone is received, then dials 30. Acknowledgment tone will be heard by station 20, indicating the feature is in effect.

Note: If station 30 becomes idle while ACBK is being effected, the system will complete the call by ringing station 30 and returning audible ringback to station 20. The ACBK feature will not be put into effect.

(3) When both stations are idle and a link is available, the system will attempt to complete the call. Station 20 will be rung first and when it answers, station 30 will be rung. Station 20 will hear ringback as an indication that the ACBK call is being attempted.

(4) If during callback, station 30 becomes busy again before station 20 answers, ***callback***

will be suspended and the system will attempt completion again when both stations are idle.

(5) If it is desired to cancel ACBK before the system has completed the call, station 20 must go off-hook and dial its own code ***from station 20.*** Acknowledgment tone will be returned to station 20 to indicate the feature is canceled.

CALL SCREENING

4.19 Where desired, station 20 can also activate DND (see paragraph 4.10) after ACBK to selectively screen incoming calls; ie, with DND in effect, all incoming calls to station 20 will receive busy tone, but the ACBK call will be completed. Once ACBK has been completed, DND can be canceled to permit other incoming calls.

OVERRIDE (OVRD)

4.20 This feature permits selected stations to bridge onto other stations that are in a busy status, ie, engaged in conversation or in the DND mode. Override (OVRD) is available in two versions depending on the location of the toggle switch on the rear of the 572A1 KSU (Fig. 1). With the switch in one position, station codes 10 and 11 have override capability (factory-provided) in the other position, codes 10 through 19 are override stations. ♦With the override switch in the 10-19 position, the station codes are as shown in Fig. 2. With the override switch in the 10-11 position, station codes associated with J6 become 10, 11, 62, 63; station codes associated with J7 become 64-67; and station codes associated with J8 become 68, 69, 20, 21.♦ The OVRD cannot be effected to the following stations or codes:

- A station in consultation hold
- A paging access code
- A CO/PBX access code.

Any of the preceding conditions will result in error tone being returned to the station attempting override.

4.21 Assuming station 10 encountered a busy in calling station 20 and wishes to override, the sequence is as follows:

(1) Station 10 flashes to obtain system dial tone and dials 01.

(2) When second dial tone is heard, station 10 dials station code 20.

(3) If station 20 is busy in a conversation, override tone (128 Hz for 500-ms) will be heard by the talking parties before the executive station is bridged onto the conversation. The overriding station does not hear the tone.

(4) If station 20 is in the DND mode, or had become idle while OVRD is being activated, station 10 will hear ringback and station 20 will be rung.

(5) If station 20 was being called, ie, by station 30 but has not answered, station 30 will hear the override tone while 10 will enter the connection and hear ringback. When station 20 answers, the three parties will be connected.

REMOTE ANSWER (REAN)

4.22 Remote answer (REAN) permits one station to answer any incoming ♦intercom♦ calls intended for another station while the call is in the ringing state. Calls cannot be remotely answered under the following conditions:

- A call to a station that has answered
- Calls to a nonstation code such as paging access or CO/PBX line access unless CO/PBX call is in the ringing or hold state
- A call-forwarded call where the call has been answered by the alternate station
- ♦While in supervisory flash mode.♦

Call intercepts attempted under the above will be routed to error tone.

4.23 The REAN is accomplished as follows:

(1) If station 20 is in the ringing state and station 10 wishes to answer the call, station 10 dials 07; and after the second dial tone is

received, dials 20—the code of the station to be answered.

(2) If the feature is properly activated, station 10 will be immediately connected to the calling party. At station 20, the intercom lamp will flash the same as for a regular call and station 20 can enter the call at any time. No audible signal is received at station 20 ▶after station 10 answers call◀ .

(3) The REAN feature is on a one-call basis, ie, only the one incoming call in progress will be intercepted, therefore, the feature does not have to be canceled.

5. OPERATION—OPTIONAL FEATURES

FOUR LINKS

5.01 The basic 6B KTS is furnished as a two-link system. To add the third and fourth link, a second 487A KTU must be separately ordered and installed in J5.

TOUCH-TONE SETS

5.02 TOUCH-TONE sets require the addition of a 489A KTU to the system installed in J1. With the 489A KTU installed, the system will recognize either rotary signal or TOUCH-TONE signal.

HANDS-FREE ANSWER ON INTERCOM (HFAI)

5.03 This feature requires the addition of a 2A transmitter-receiver ▶unit◀ at each station desiring the feature. The HFAI permits a calling station to voice signal a HFAI-equipped station and also allows the HFAI station to answer without going off-hook. In addition to equipping the desired stations with ▶the 2A transmitter-receiver unit◀ , the continuous ring option (option ▶T◀) must be installed on the 484A KTUs involved and the single-spurt audible ringback option (option ▶W◀) installed on the 486A KTU (service circuit). If HFAI is removed from a station, the 484A KTU should be changed back to the interrupted ring option (option ▶V) provided the other station on the unit is not a HFAI station.◀

Note: If any station in the system has HFAI, all stations will have single-spurt audible alerting tone since option ▶W◀ is on a system basis. In addition, the station associated on the station circuit KTU with the HFAI station will have continuous ring ▶since each option plug on the 484A KTU is for two stations.◀

For example, if station 20 has HFAI, station 21 will have continuous alerting tone.

The 2A transmitter-receiver is connected to the station as shown in Fig. 10. Additional information on the 2A transmitter-receiver can be found in Section 518-010-115.

5.04 Stations with HFAI operate as follows:

(1) When a HFAI station is dialed, the microphone in the adjunct is turned on as indicated by the MIC-ON LED, and a single 1/2-second tone burst is heard at both stations.

(2) After hearing the tone burst, the calling party can voice signal the HFAI station. The HFAI station may answer without going off-hook via the mike in the adjunct.

(3) If the HFAI station does not want local conversation or noise to be heard, the MIC-OFF button must be depressed, during which time the LED will turn off. In this condition, incoming calls can be received but cannot be answered. The called station may return to HFAI by releasing the MIC-OFF button.

5.05 The following conditions apply to HFAI calls:

(a) If a HFAI station is called on a dial conference call, it must go off-hook within 16 seconds of the first called station going off-hook to prevent the possibility of a conference call being broadcast at an unattended HFAI station. After 16 seconds the ▶HFAI feature◀ will time-out but the lamp at the HFAI station will continue to flash. The HFAI station can enter the conference while the lamp is flashing but only using the handset.

(b) A station in HFAI cannot be added as the third party in call add-on. The station can be called and can converse while in HFAI but to be added on, must go to handset operation before the calling station operates the switchhook a second time to return to the original connection. Failure to go to handset will cause the HFAI station to be dropped.

(c) Calls cannot be transferred to a station in the HFAI mode without going off-hook before the transfer. As in add-on, the HFAI station will be dropped.

(d) The HFAI stations can be placed on station hold but not consultation hold. This prevents a HFAI station being connected to a CO/PBX line for transmission reasons.

(e) Two HFAI stations called on a dial conference call will not be able to communicate with each other and must go to their handsets.

(f) Calls cannot be originated in HFAI.

5.06 The 2A transmitter-receiver adjunct is equipped with a DND button which operates separately from the system DND. Station DND is operated by depressing the DND button which locks down. To allow incoming calls, the DND button must be depressed again, releasing it. If the station DND and system DND are activated at the same time, or if just the system DND is activated, the calling station will hear the system tone (busy signal). If only the station DND is activated, both stations will hear a double tone burst from the adjunct.

PAGING ACCESS

5.07 This feature permits the 6B KTS stations to access a customer-owned and maintained (COAM) or telephone company-provided amplifier and loudspeaker for paging. Up to three paging zones, plus one all-page zone, can be provided. When paging access is provided, the number of station codes is reduced by four since the 484A KTU in J16 becomes dedicated to paging. These leads appear in J9 on the rear of the KSU. Each paging zone (except all page) requires a 278A adapter as an interface between the 6B KTS and the amplifier (Fig. 11). A separate amplifier should be supplied for each zone. If desired, a separately supplied music source can be connected to the 278A adapter(s) as background music through the amplifiers to the paging speakers. If background music is connected, ***one*** 278A adapter must be strapped to present an 8-ohm load to the music source. The adapters must be separately mounted from the KSU and require -24 volts dc and ground which must be supplied from a separate source.

5.08 The codes assigned to paging addesss are 71, 72, and 73. If all page is desired, the code is 70. When paging access is provided, station codes 50 through 53 are converted to use as 70 through 73 and, therefore, are not available as station codes. The conversion is accomplished by operating the toggle switch marked PAG ACC to the ON position. The switch is located on the rear of the 572A1 KSU just above the connectors for the incoming cables. As factory provided, the switch is in the OFF position. The 484A KTU for codes 50 through 53 must be converted for the continuous ring option (option A). ⧫Cabling methods, when paging access is provided, are shown in Fig. 39.⧫

5.09 Any 6B KTS station can make a paging call as follows:

(1) Paging station goes off-hook and dials 71, 72, 73 for desired paging zone or code 70 if all zones are to be paged.

(2) The 278A adapter associated with the zone(s) will disconnect the background music if provided and connect the paging station to the amplifier. ⧫A muted⧫ alerting tone will be sent through the speakers and the paging station will hear acknowledgment tone.

(3) Paging station can now make announcement to speakers using telephone handset.

CO/PBX LINE ACCESS

5.10 All 6B KTS stations can access up to eight CO/PBX lines under the following conditions only:

- While ringing is applied to the line
- If the line has been placed on hold through the associated key system line circuit.

Access cannot be made when the line is idle or in the talk mode; therefore, outgoing calls cannot be made through the 6B KTS. The CO/PBX line must be terminated in a 1A1 or 1A2 line circuit having A-lead control. The line circuit is required to determine whether the CO/PBX line is ringing, idle, busy, or on hold. Access to the lines in the proper state is made by dialing a 2-digit code. Once an incoming call has been answered and put

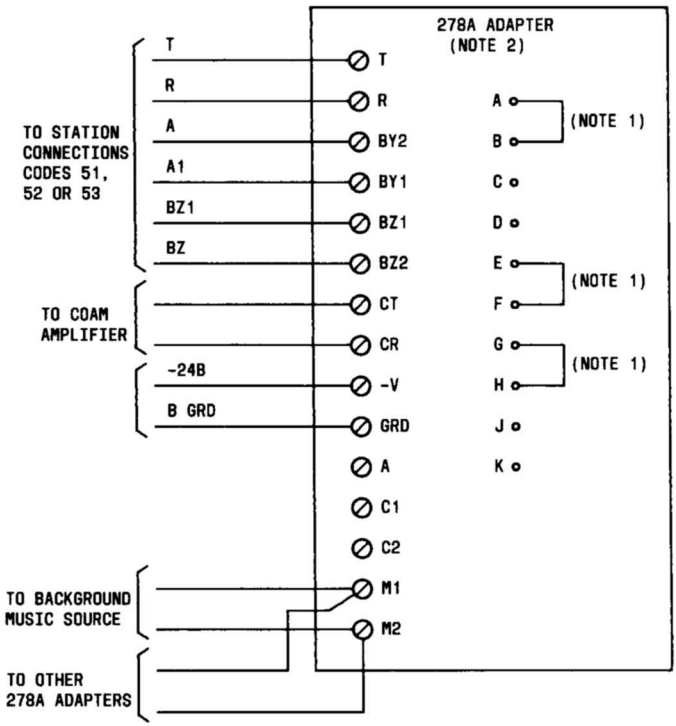

NOTES:
1. OPTION PLUGS MUST BE POSITIONED IN E-F AND G-H ON ONE ADAPTER ONLY - LEAVE PLUGS STORED ON SECOND AND THIRD ADAPTER. POSITION PLUG IN A-B ON ALL ADAPTERS
2. ADD CONTINUOUS RING OPTION TO ASSOCIATED 484A KTU.

Fig. 11—278A Adapter Connections for Paging Access

on hold, the call can be transferred to another station or a station can be added on.

5.11 Incoming CO/PBX calls are handled by intercom stations as follows:

(1) When line is called, associated line circuit will provide flash indication.

(2) Answering station accesses line by dialing a 2-digit CO/PBX access code (80 through 87) assigned to line.

(3) The answering station can then either:

(a) Handle the call and disconnect by going on-hook

(b) Pass the call to another intercom station by flashing the switchhook to place call on hold, dialing the other station and, when they have answered, disconnecting

(c) Add another station by flashing the switchhook to place call on hold, dialing the other station and, when they have answered,

flashing a second time to reenter the original connection.

The previous procedure is for 6B KTS stations and does not prevent the CO/PBX line being picked up in a normal manner on key system sets if it appears.

ATTENDANT RECALL

5.12 To recall the attendant on a PBX call that is connected through the 6B KTS, the answering station must flash the switchhook which will return intercom dial tone. The station then dials 00 which will send a timed flash to the PBX ▶line which will alert the PBX operator. This feature should not be used with PBX lines that return dial tone on a switchhook flash or on a CO line as it will result in a lost call◀ .

6. MAINTENANCE

6.01 Maintenance information pertaining specifically to the 6B KTS is provided in three forms:

- Feature sequence charts (Tables F through O)
- Trouble analysis charts (Fig. 13 through 22)
- Diagnostic test sequences (Fig. 23 through 34).

A. Feature Sequence Charts

6.02 These charts provide a method of testing for the proper sequence of each feature. No equipment failure indications are given.

B. Trouble Analysis Charts

6.03 This series of charts provide an analysis of the probable trouble causes depending on the more likely trouble reports. Some results may require further testing using the Diagnostic Test Sequences.

C. Diagnostic Test Sequences

6.04 These tests require the use of the optional HK-14 circuit pack (Fig. 12) and a 1013-type hand test set. Maintenance operations involving the HK-14 circuit pack should be performed by 2nd-tier maintenance personnel only. Using the test sequences, the status of the major signaling busses and the system power for all links can be tested. Visual signals are provided on the circuit pack and audible tones heard in the hand test set.

6.05 The HK-14 circuit pack must be plugged into J6 in place of the first 484A KTU. As soon as it is plugged in, the stations associated with the first 484A KTU will get a system busy indication, ie, the intercom lamp will light steadily at the stations. ▶Connect hand test set in talk mode to terminals at bottom of HK-14 circuit pack.◀ When the ON switch is operated, all stations will see a system busy and the system will be taken out of service until the switch is turned ***off.***

6.06 To start the sequence after the switch is turned to ON, 05 must be dialed ▶on the hand test set◀ . The circuit pack will then test each link for each test. For instance, after 05 is dialed, the digit 1 will be displayed and link 1 tested for dial tone, then link 2 and if provided, links 3 and 4. ▶The craftsperson must listen for dial tone as well as look at the "PASS" LED.◀ The test will then be repeated unless the STEP switch is depressed or the circuit pack turned off. If the STEP switch is depressed, the circuit pack will make the next test of each link in sequence. The test being made is displayed visually (Fig. 12). If it is desired to make a particular test, the circuit pack must be stepped until the proper digit or letter is displayed. Refer to Table P and Fig. 23 through 34 for the circuit pack preparation sequence and the individual test sequences.

6.07 The voltages used in the system are monitored continuously as soon as the circuit pack is plugged in.

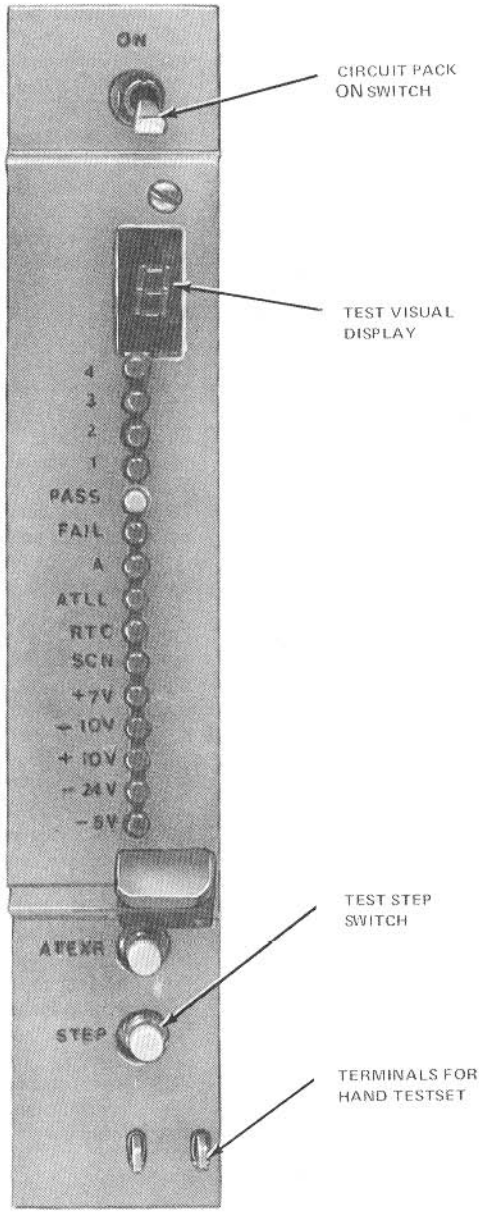

Fig. 12—HK-14 Circuit Pack Faceplate

TABLE F

OVERRIDE
(OVRD)

At override station, depress IC button, go off-hook.

OK

IC dial tone.

Dial 01.

FAILURE

IC dial tone.

Error tone—

1. Feature attempt by nonoverride station.
2. Invalid procedure, station must reattempt feature activation.

Dial code of station to be overridden.

OK

Override tone heard by conversing parties then override station enters call

or

Override station hears audible ringback and called station in DND or idle mode is rung.

FAILURE

Error tone—

1. Paging code dialed or called station paging.
2. Called station not a working station.
3. Called station on hold.
4. Called station link at maximum capacity.

TABLE G

DO-NOT-DISTURB
(DND)

At any station, depress IC button, go off-hook.

OK

IC dial tone.

Dial 06.

OK

Acknowledgment tone.

Calling stations receive busy tone. Lamp will flash at DND station but audible signal is silenced. Call can be answered or ignored.

TABLE H

CONFERENCING
(FLEX)

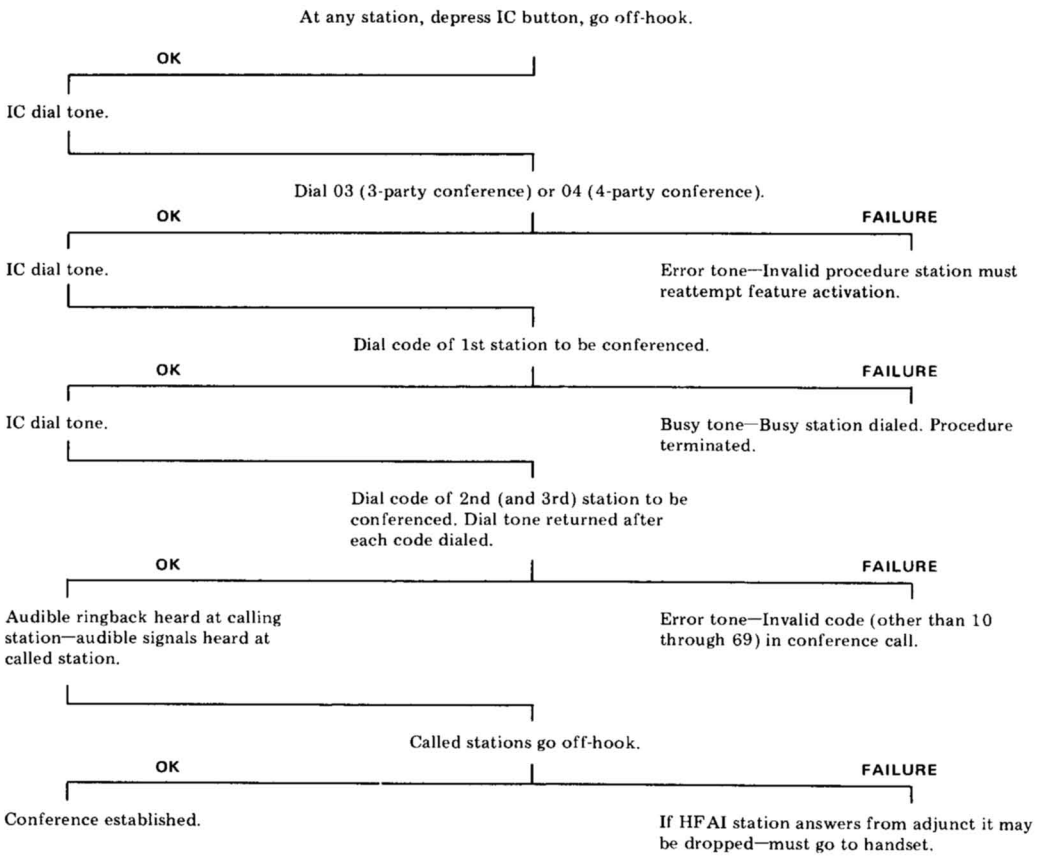

TABLE I

REMOTE ANSWER
(REAN)

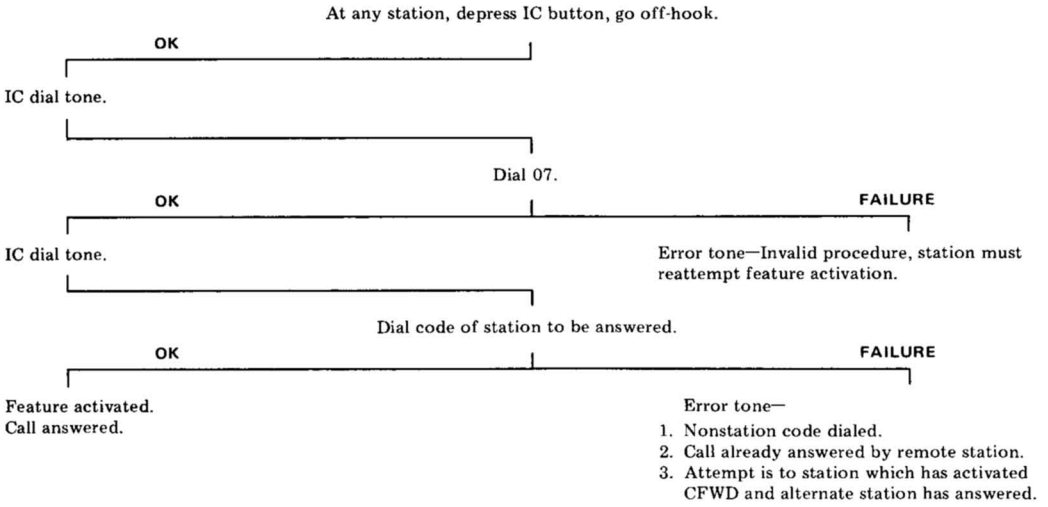

TABLE J

CALL FORWARDING (CFWD)

At any station, depress IC button, go off-hook.

IC dial tone.

Dial 02.

OK

IC dial tone.

FAILURE

Error tone—Automatic callback in effect.
Busy tone—No memory available.

Dial code of alternate station.

OK

Acknowledgment tone.

FAILURE

Error tone—

1. Alternate station not a working station.
2. Nonstation code.

Busy tone—Alternate station in DND.

Audible and lamp signals operate at both stations on calls to originating station. Calls can be answered at either station. Signals time-out at originating station after 12 seconds.

TABLE K

PBX OPERATOR RECALL

PBX call in progress.
Station flashes switchhook.

OK

Flash dial tone.

Dial 00.

OK

Timed flash (450 ms) to PBX operator.

FAILURE

Error tone—no PBX link available.

Operator answers or dial tone is returned if connected to a PBX/CTX line.

TABLE L

SUPERVISORY FLASH FEATURES
(C HOLD, CADD, XFER)

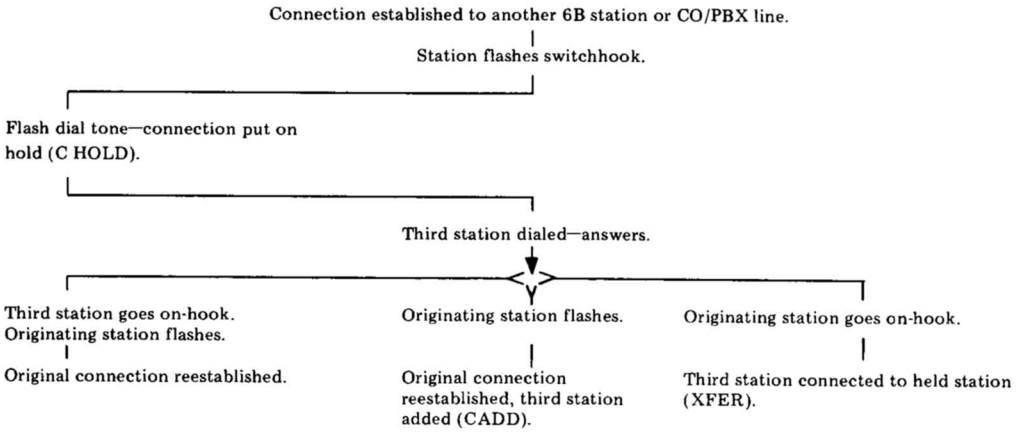

TABLE M

AUTOMATIC CALLBACK (ACBK)

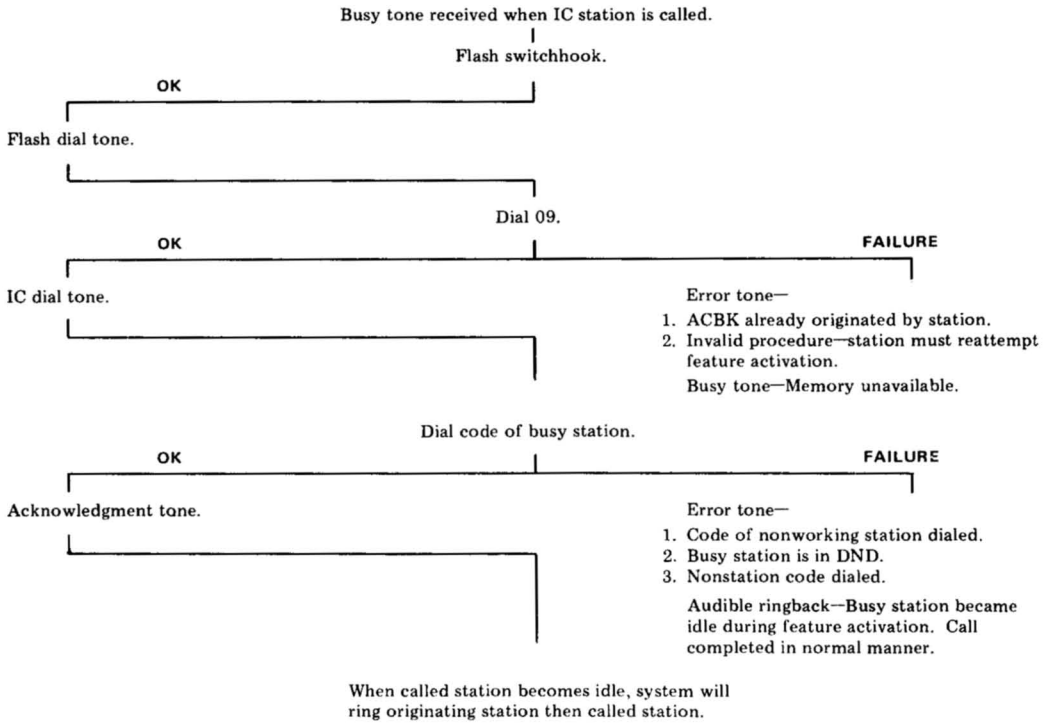

TABLE N

FEATURE CANCELLATION

DND, ACBK, or CFWD feature in effect.

Originating station goes off-hook.

OK

Reminder dial tone.

Originating station dials own station code.

OK

Acknowledgment tone.

DND, ACBK, and/or CFWD canceled.

TABLE O

CO/PBX LINE ACCESS

Line button flashes, indicating incoming call.

At any 6B station, depress IC button, go off-hook.

OK

IC dial tone.

Dial code (80-87) assigned to CO/PBX line.

OK

Connection established to CO/PBX line.

FAILURE

CO/PBX line idle or busy.

6B station can handle call, then go on-hook

or

Transfer call by flashing (call goes on hold), calling another station, and going on-hook when answered

or

Add station by flashing, calling another station, and flashing a second time when other station answers.

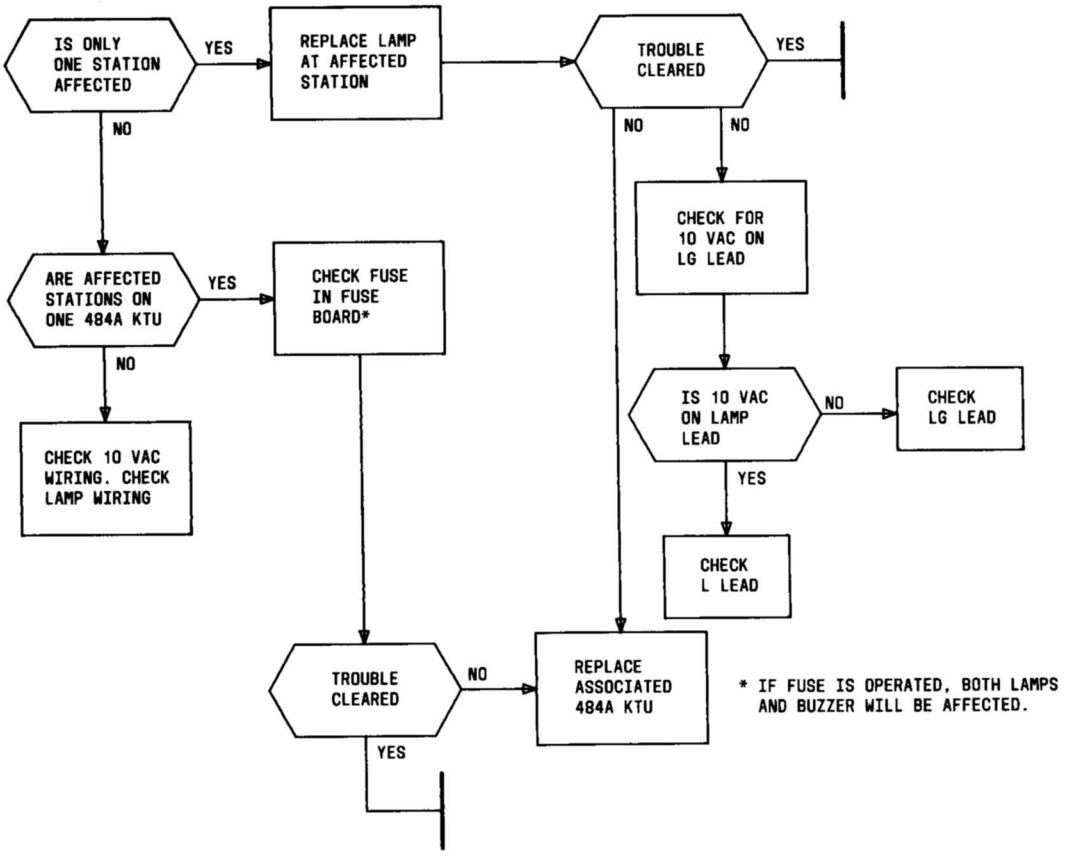

Fig. 13—Intercom Lamp Does Not Light

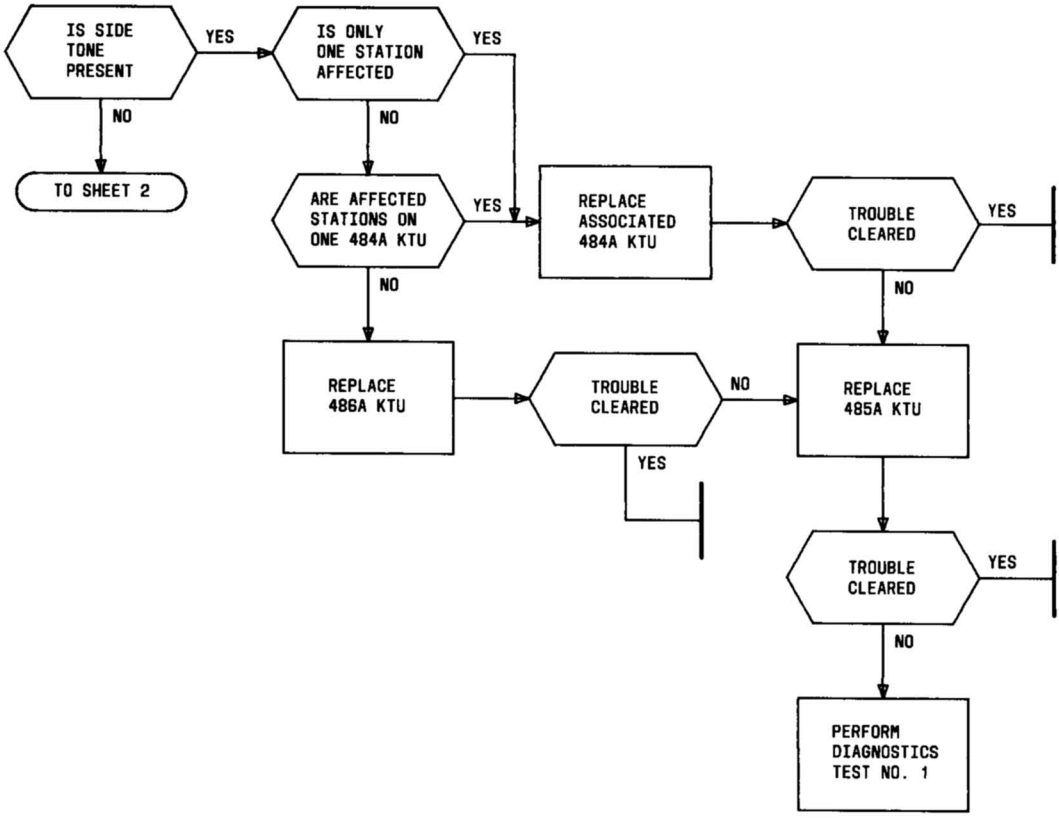

Fig. 14—No Dial Tone (Sheet 1 of 2)

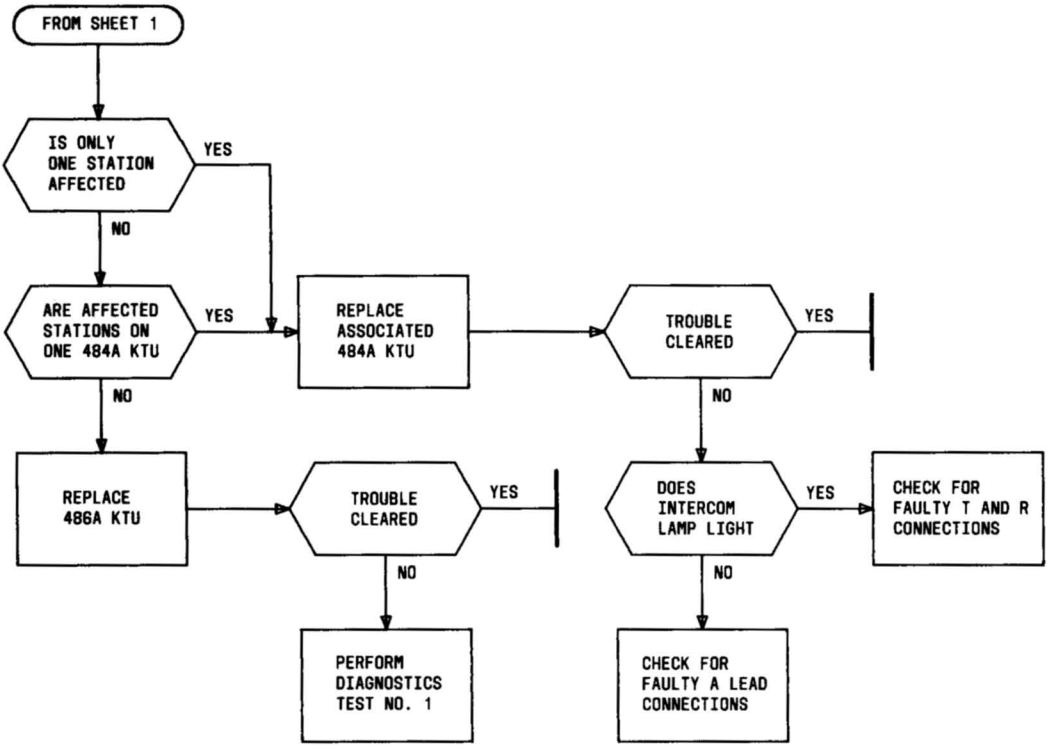

Fig. 14—No Dial Tone (Sheet 2 of 2)

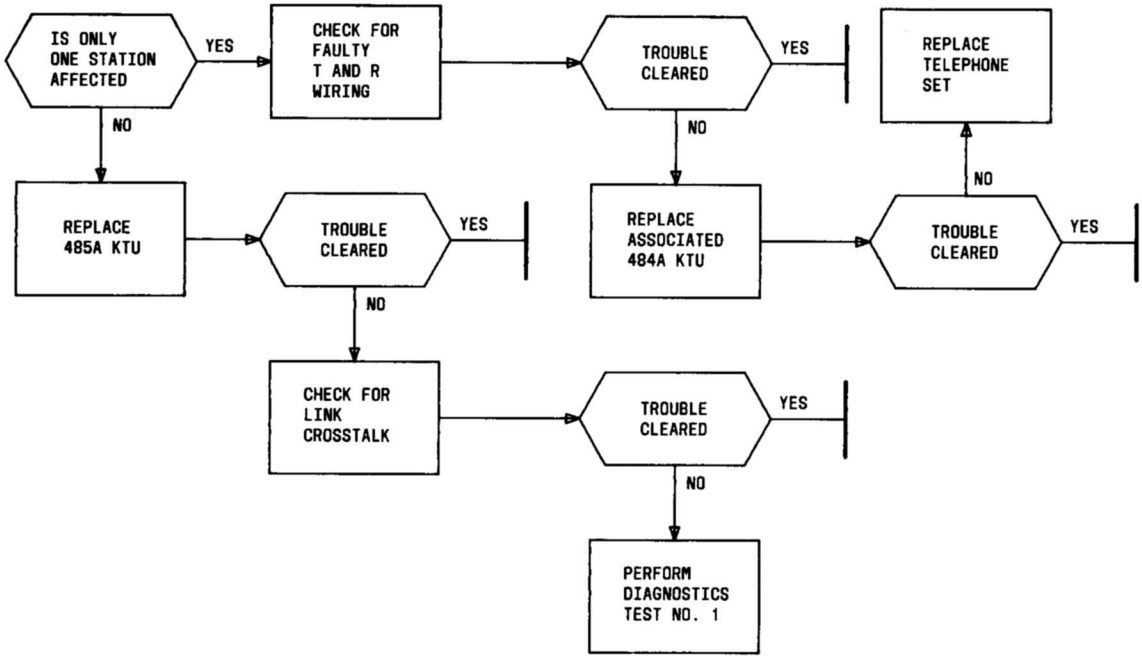

Fig. 15—Cannot Dial From Rotary Dial Telephone Set

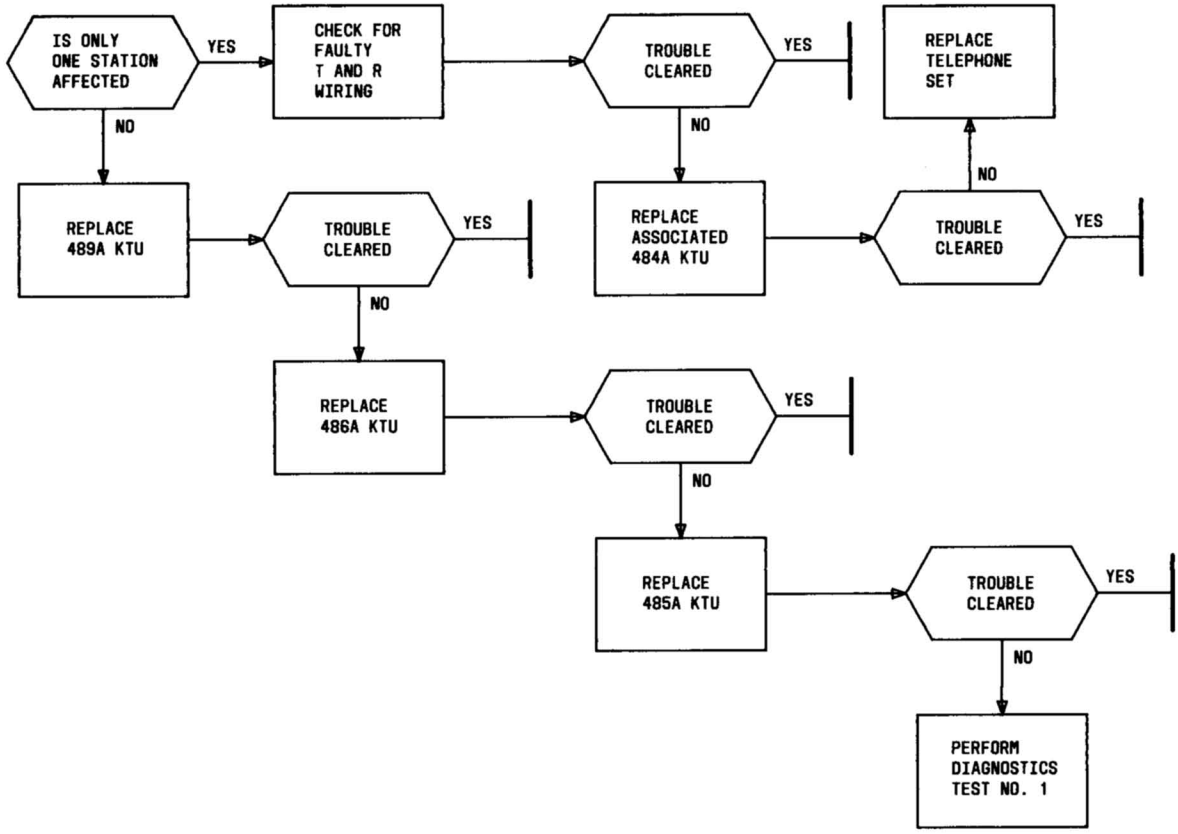

Fig. 16—Cannot Dial From TOUCH-TONE Telephone Set

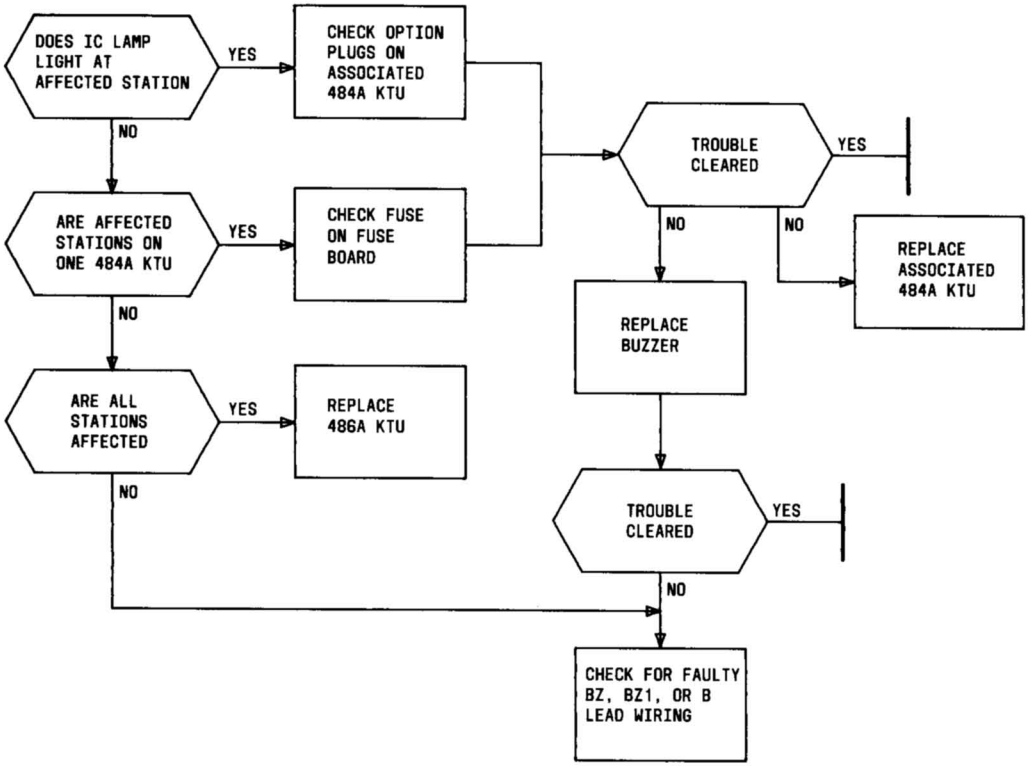

Fig. 17—Intercom Buzzer Does Not Operate

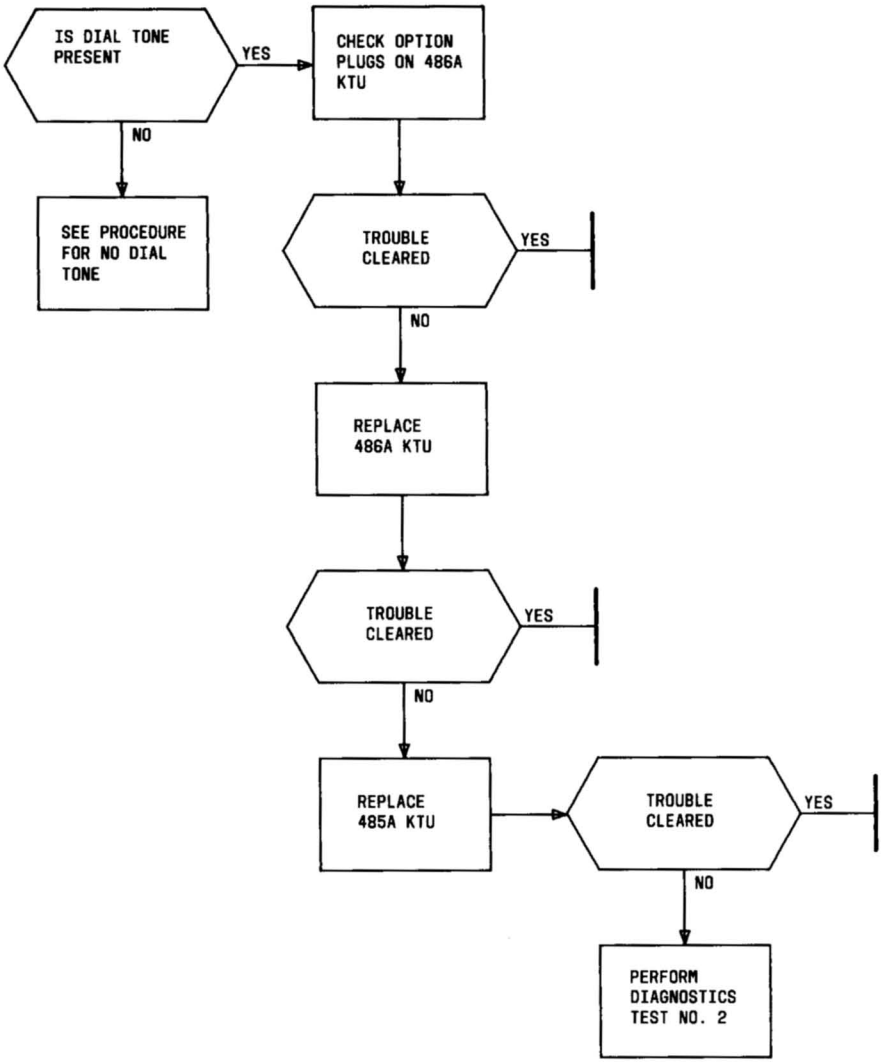

Fig. 18—No Audible Ringback

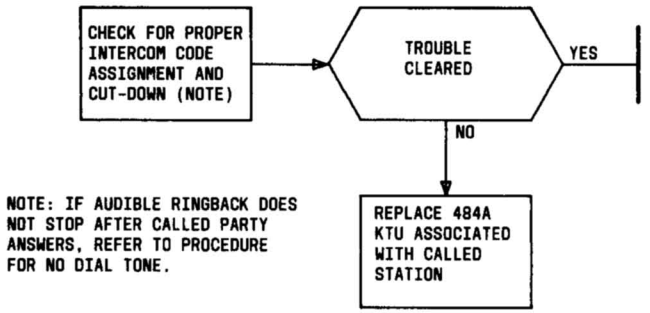

Fig. 19—Cannot Call Specific Station—Audible Ringback Heard

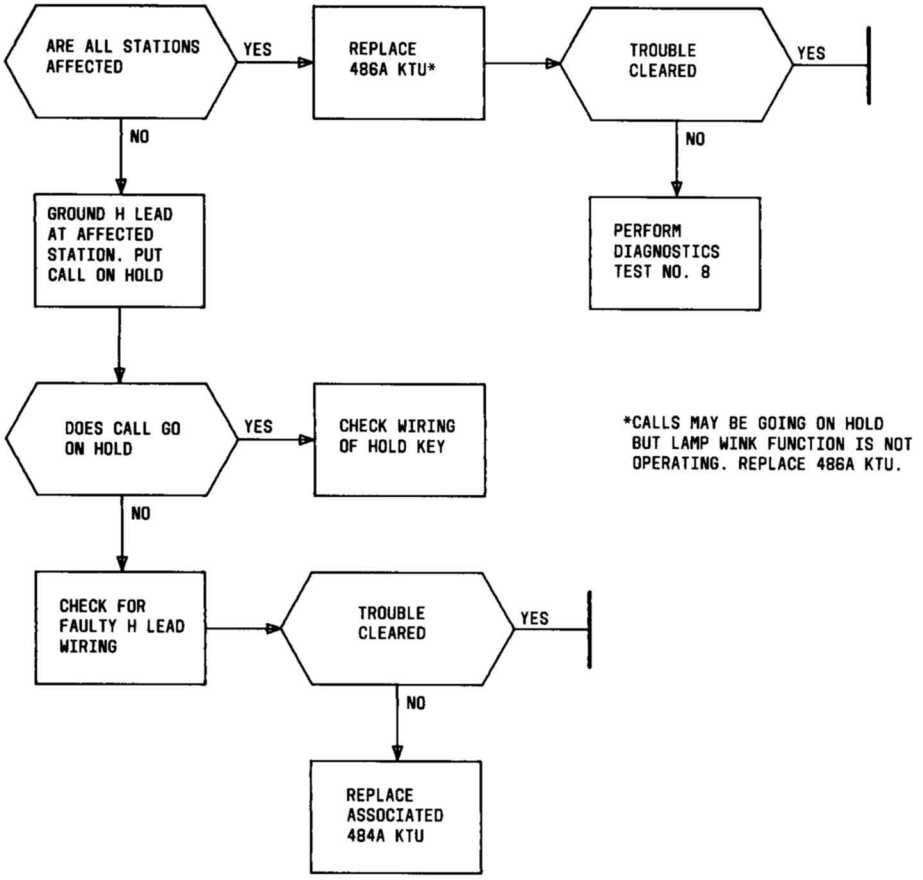

Fig. 20—Cannot Place Intercom Call On Hold

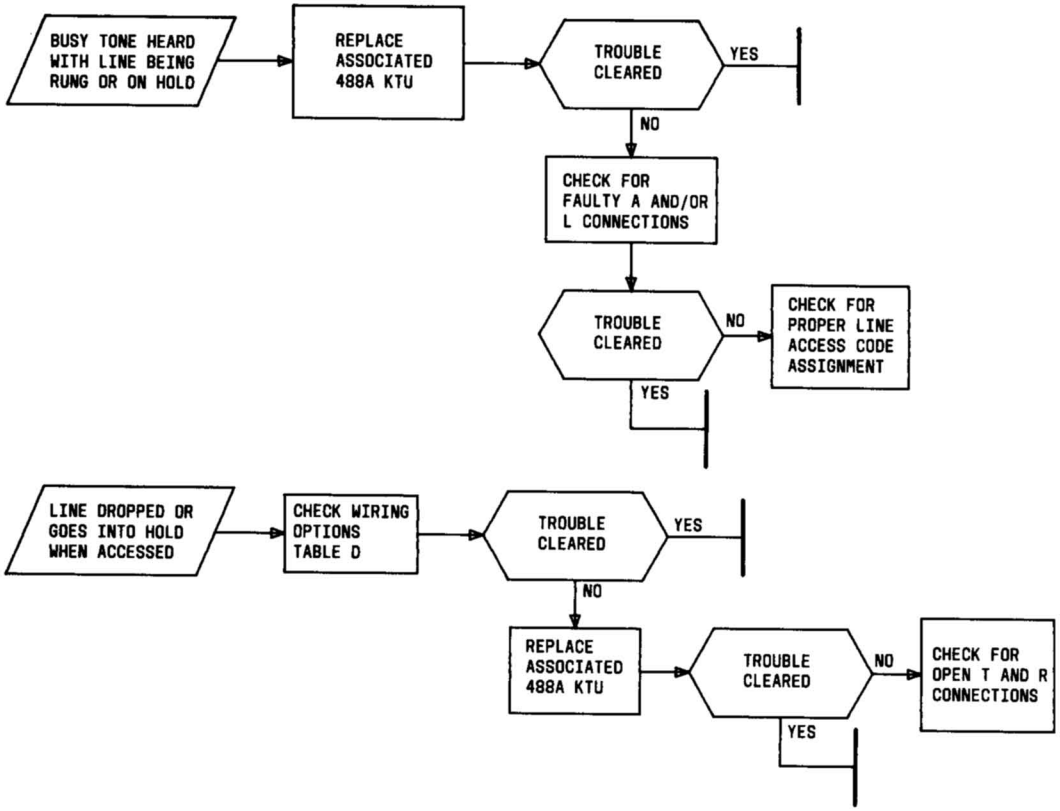

Fig. 21—Cannot Access CO/PBX Line in Ringing State or On Hold

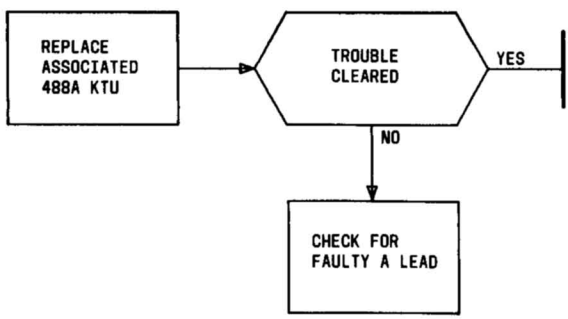

Fig. 22—Cannot Release From Answered CO/PBX Line

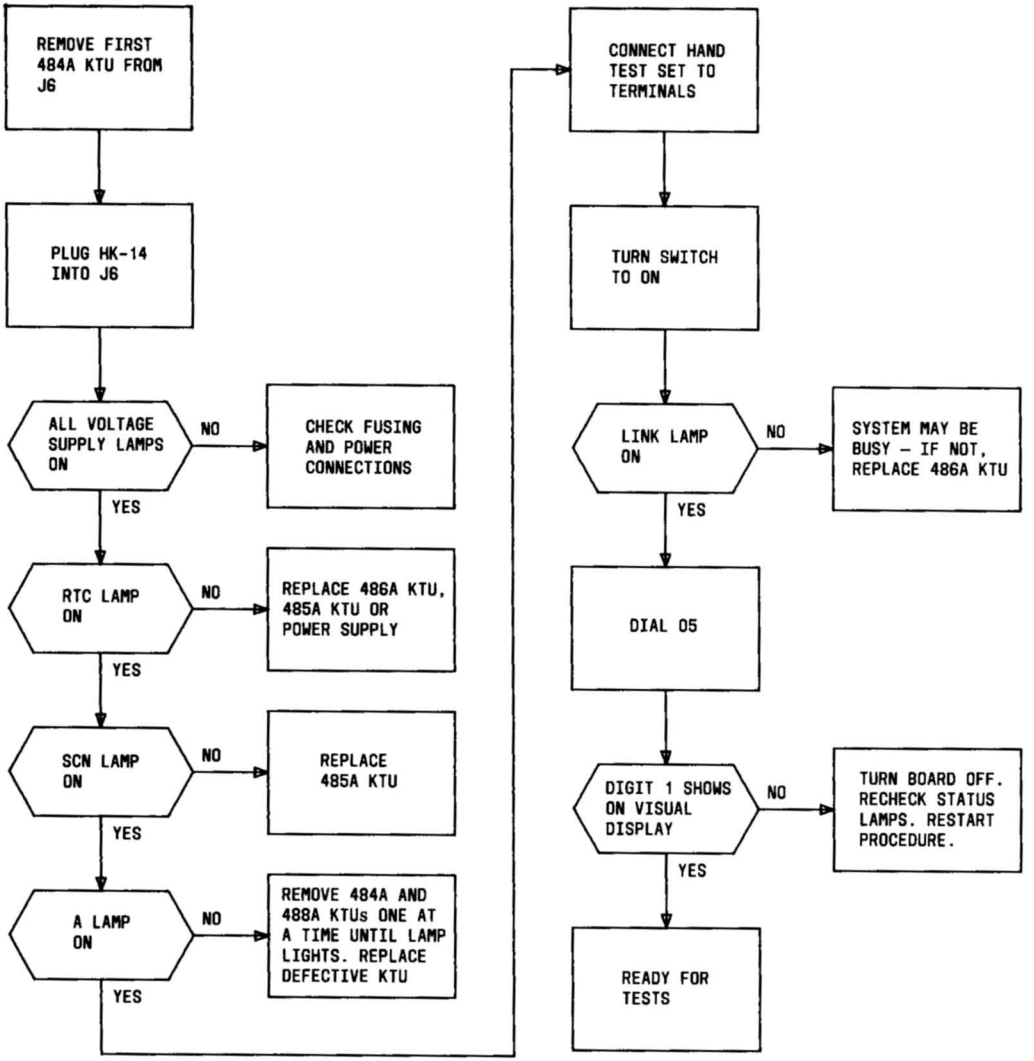

Fig. 23—HK-14 Diagnostic Circuit Pack Preparation

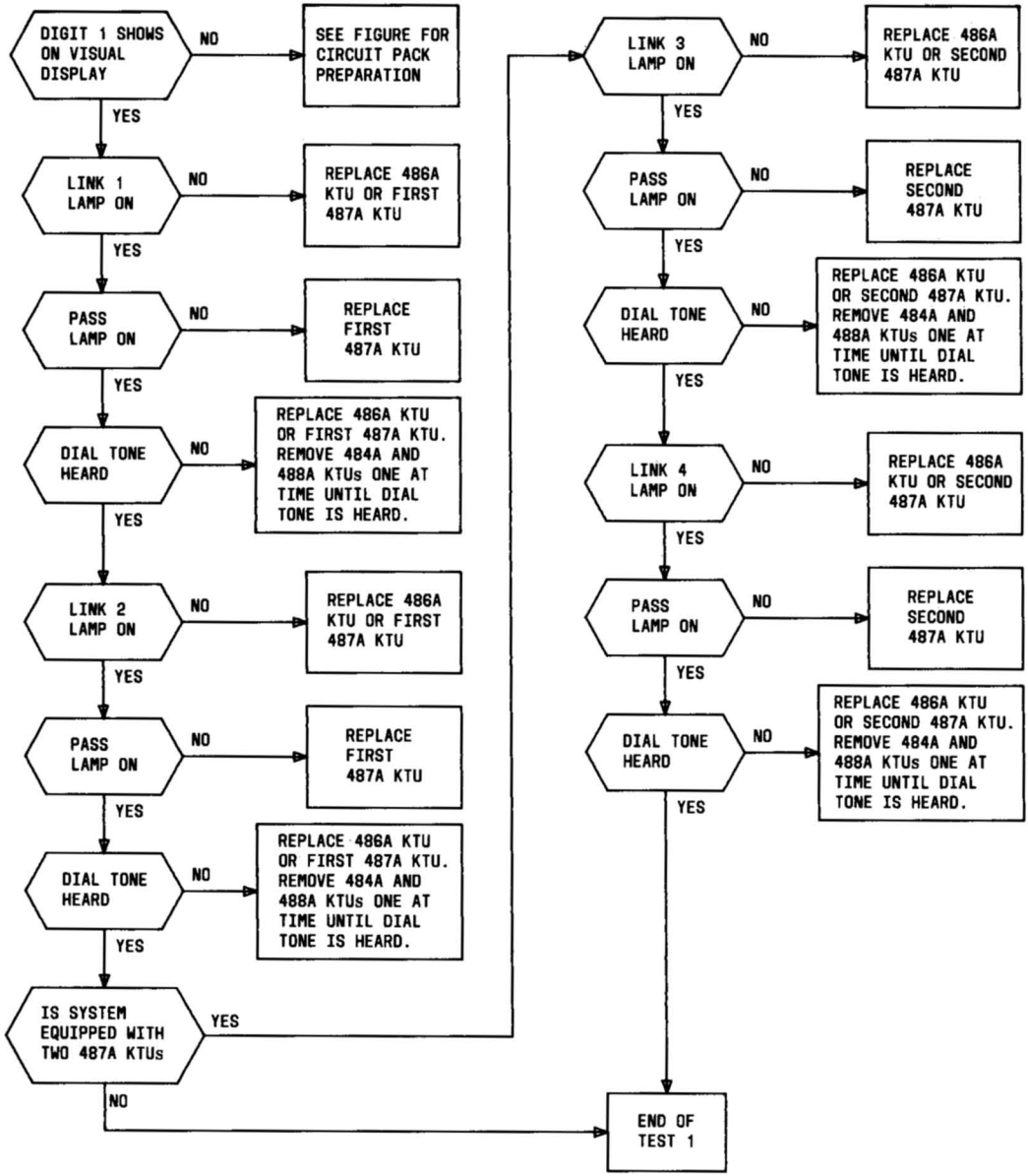

Fig. 24—Test 1 Sequence—Link Operation and Dial tone

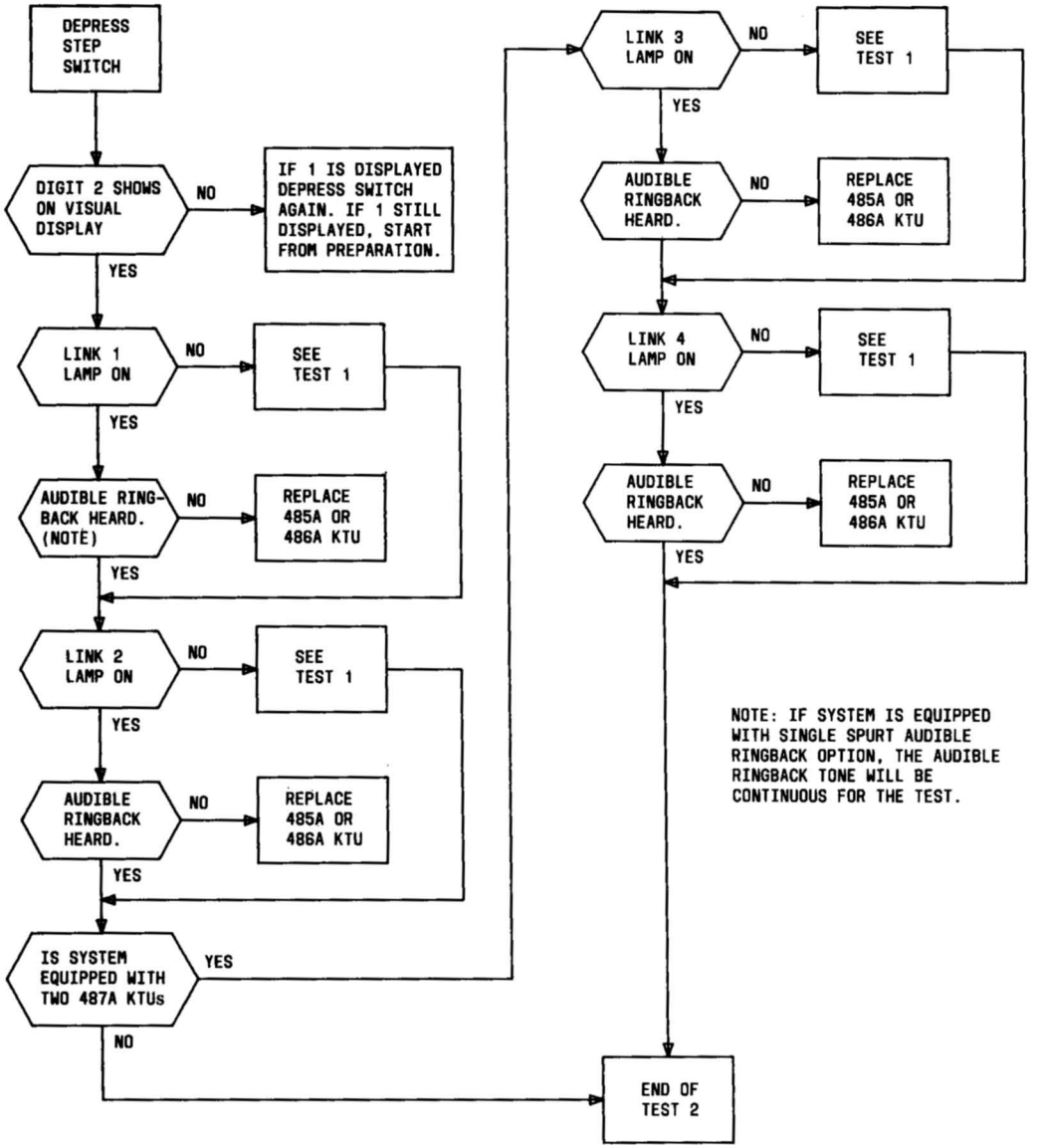

Fig. 25—Test 2 Sequence—Audible Ringback

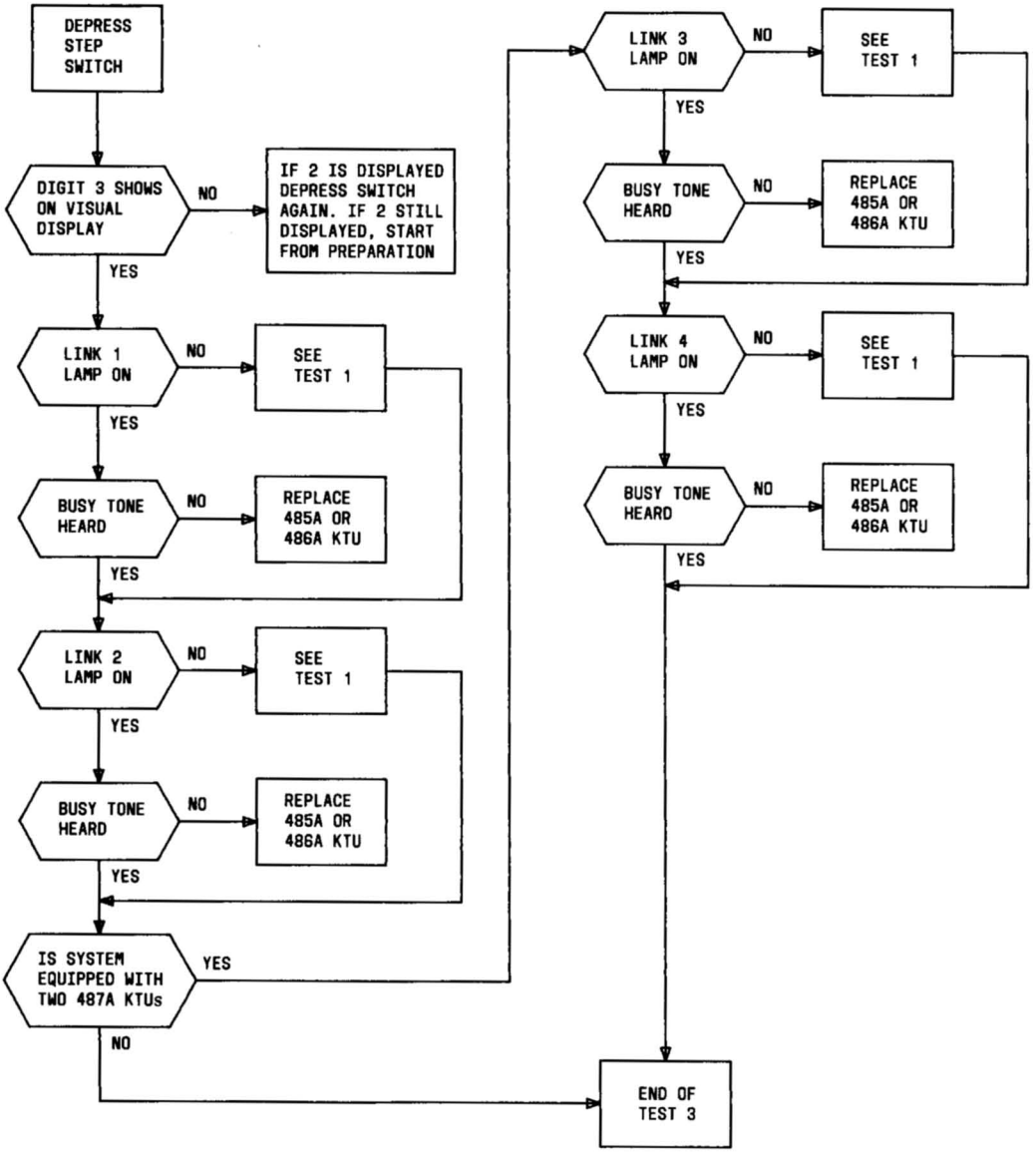

Fig. 26—Test 3 Sequence—Busy Tone

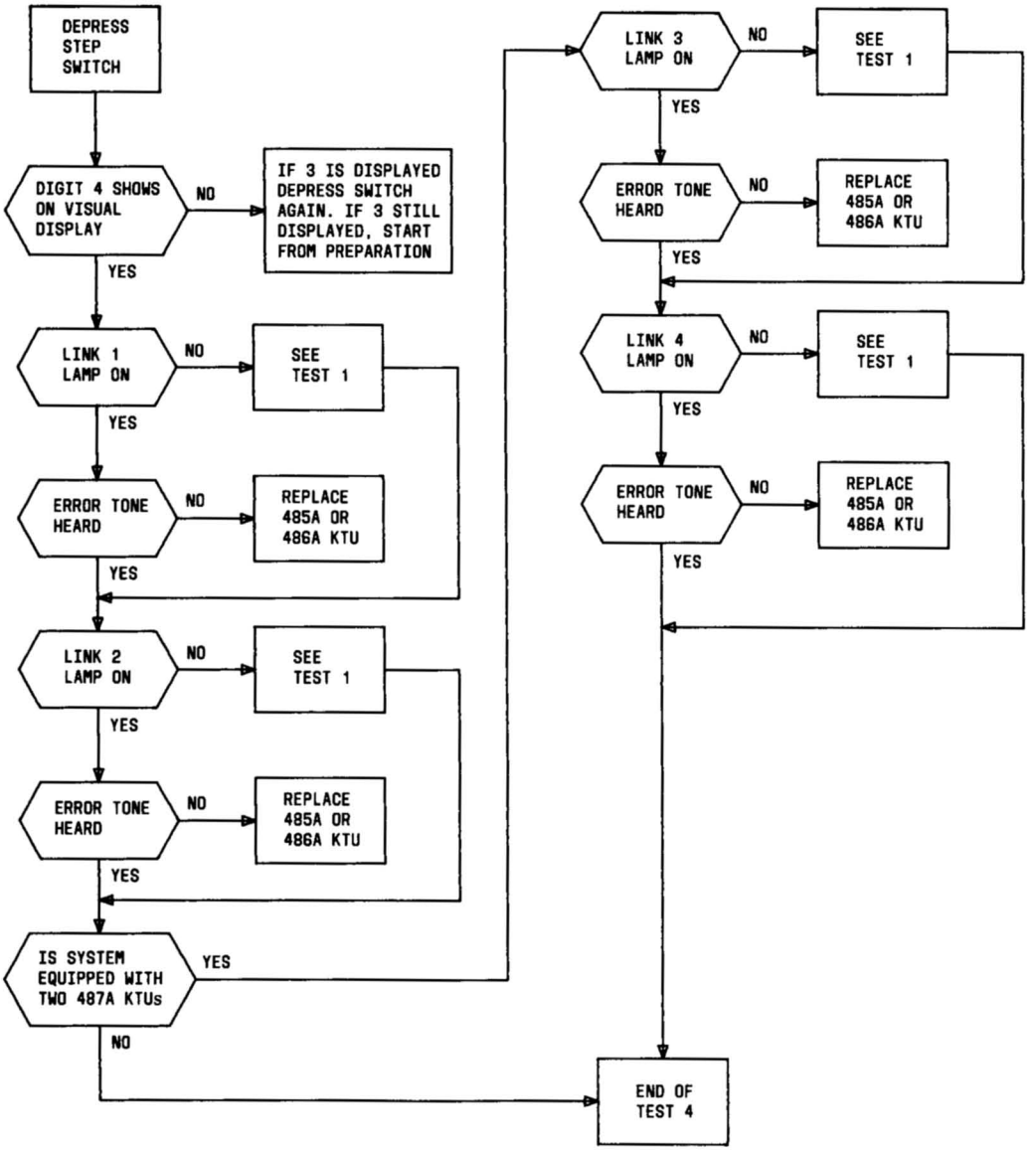

Fig. 27—Test 4 Sequence—Error Tone

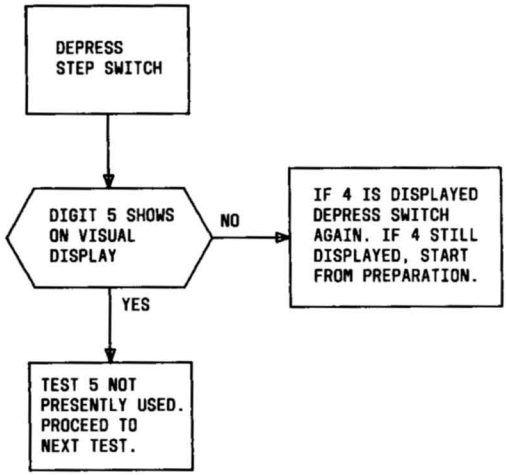

Fig. 28—Test 5 Sequence

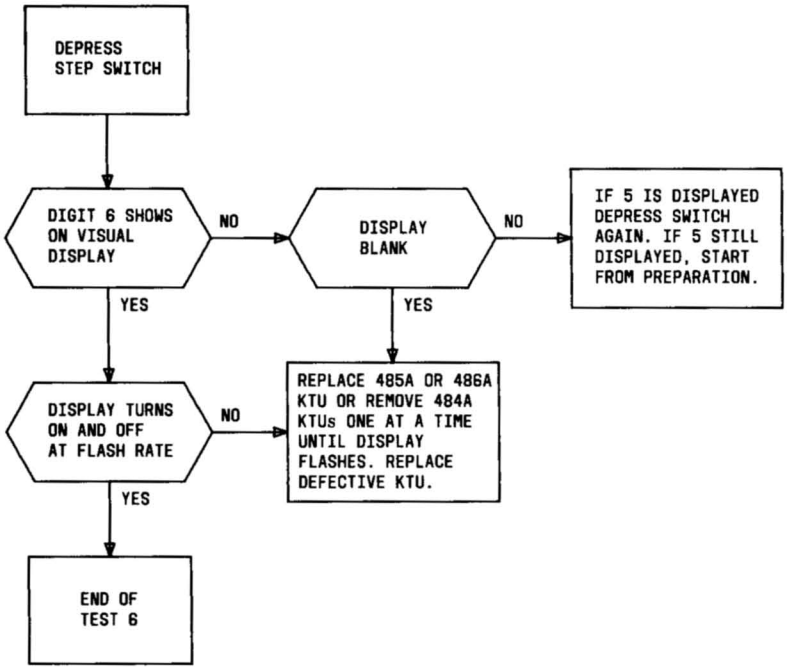

Fig. 29—Test 6 Sequence—Flash Rate

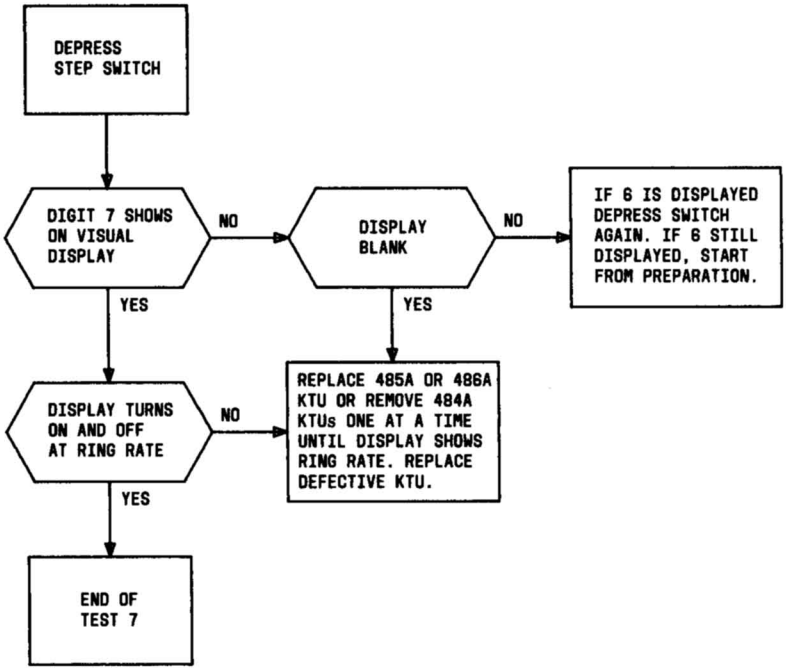

Fig. 30—Test 7 Sequence—Ring Rate

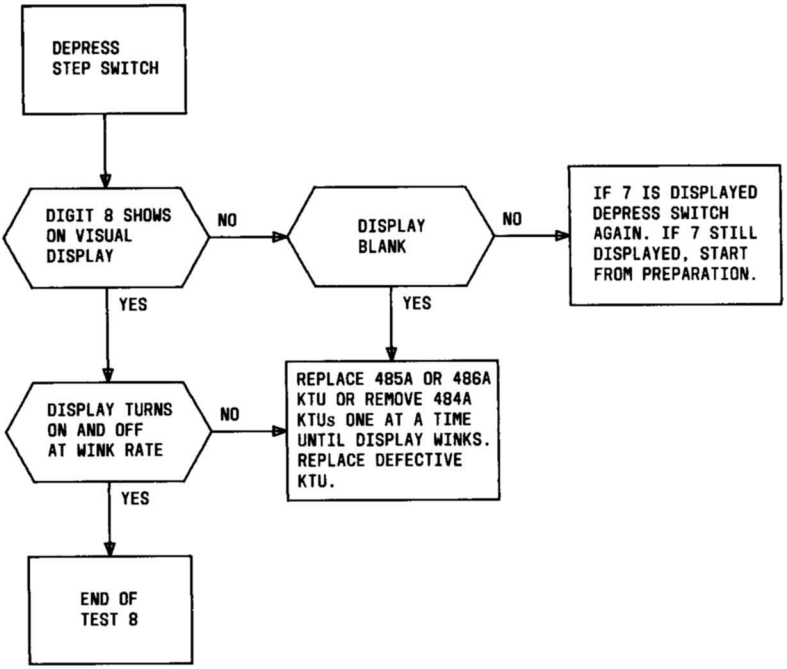

Fig. 31—Test 8 Sequence—Wink Rate

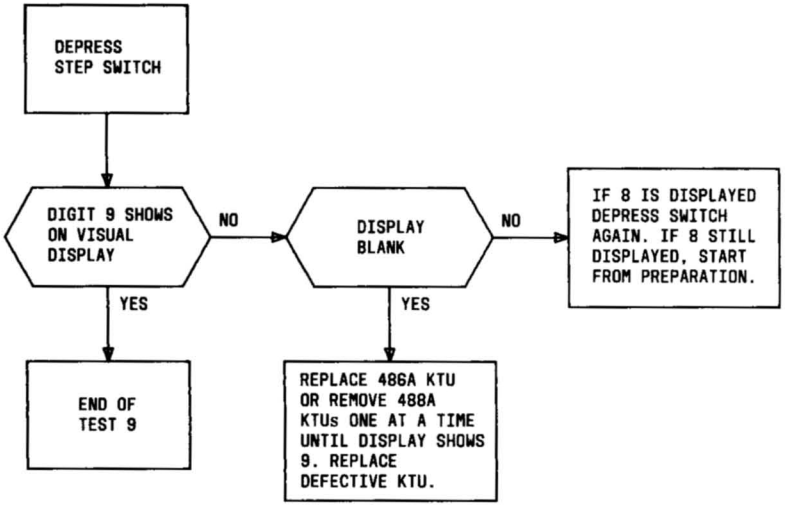

Fig. 32—Test 9 Sequence—Slow CO Disconnect

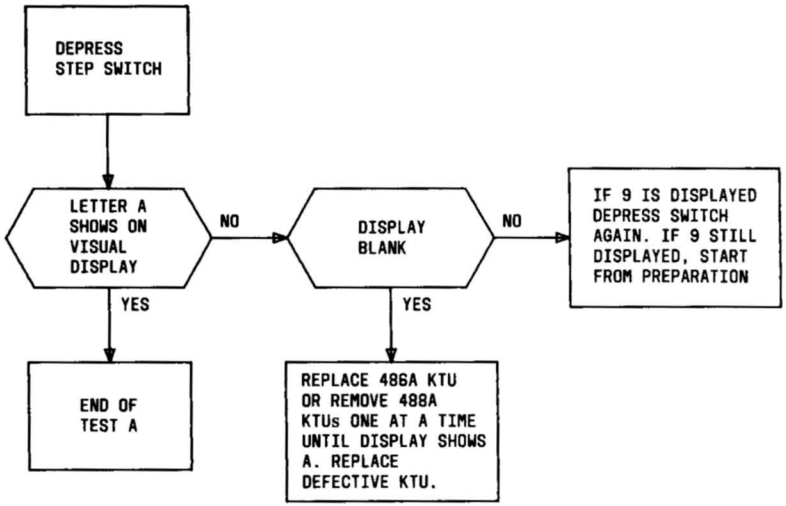

Fig. 33—Test A Sequence—Fast CO Disconnect

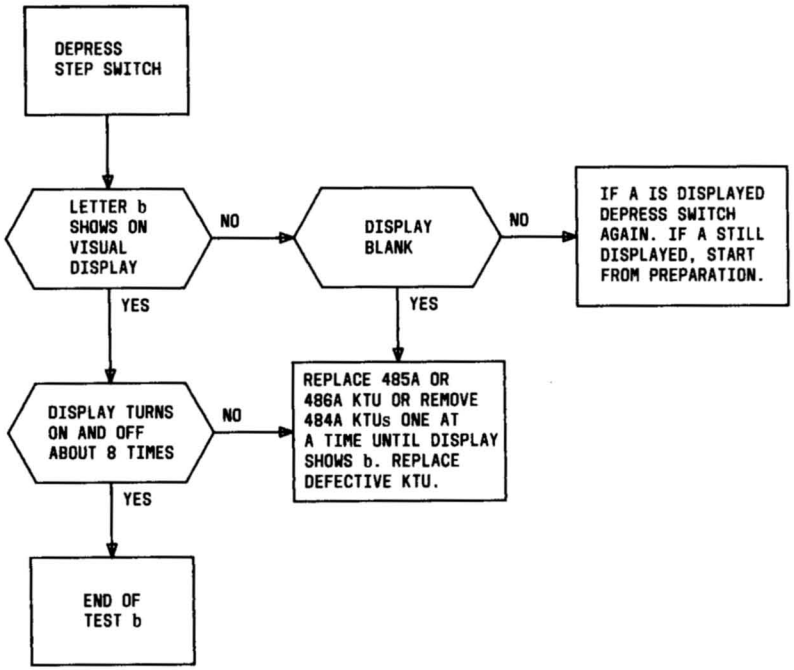

Fig. 34—Test B Sequence—Alert Time-Out

♦TABLE P♦

CIRCUIT PACK HK-14 LAMP INDICATIONS AND SWITCHES

LAMP OR SWITCH		FUNCTION
Status Lamps	1	Indicates which link is being tested
	2	
	3	
	4	
	PASS	Indicates the outcome of a test
	FAIL	
	A	When lit, indicates proper operation of the A lead buss
	ATLL	When lit, indicates ATLL buss is operating properly
	RTC	When lit, indicates proper operation of Real Time Clock
	SCN	When lit, indicates processor is scanning stations
	+7V	When lit, indicates presence of proper voltage in system
	−10V	
	+10V	
	−24V	
	−5V	
LED Display Lamp	1	Link operation and dial tone
	2	Audible ringback
	3	Busy tone
	4	Error tone
	5	Automatic transfer function*
	6	Flash rate
	7	Ring rate
	8	Wink rate
	9	Slow CO disconnect
	A	Fast CO disconnect
	B	Check for Alert Time Out
Switch	ON	In the ON position, provides off-hook indication to the system
	STEP	Steps the Diagnostic Test program through the steps
	ATXFR	Used with test number 5*

* When making this test, FAIL lamp is normally lit. When ATXFR switch is depressed, PASS lamp lights. Test 5 is presently not used with 6B KTS.

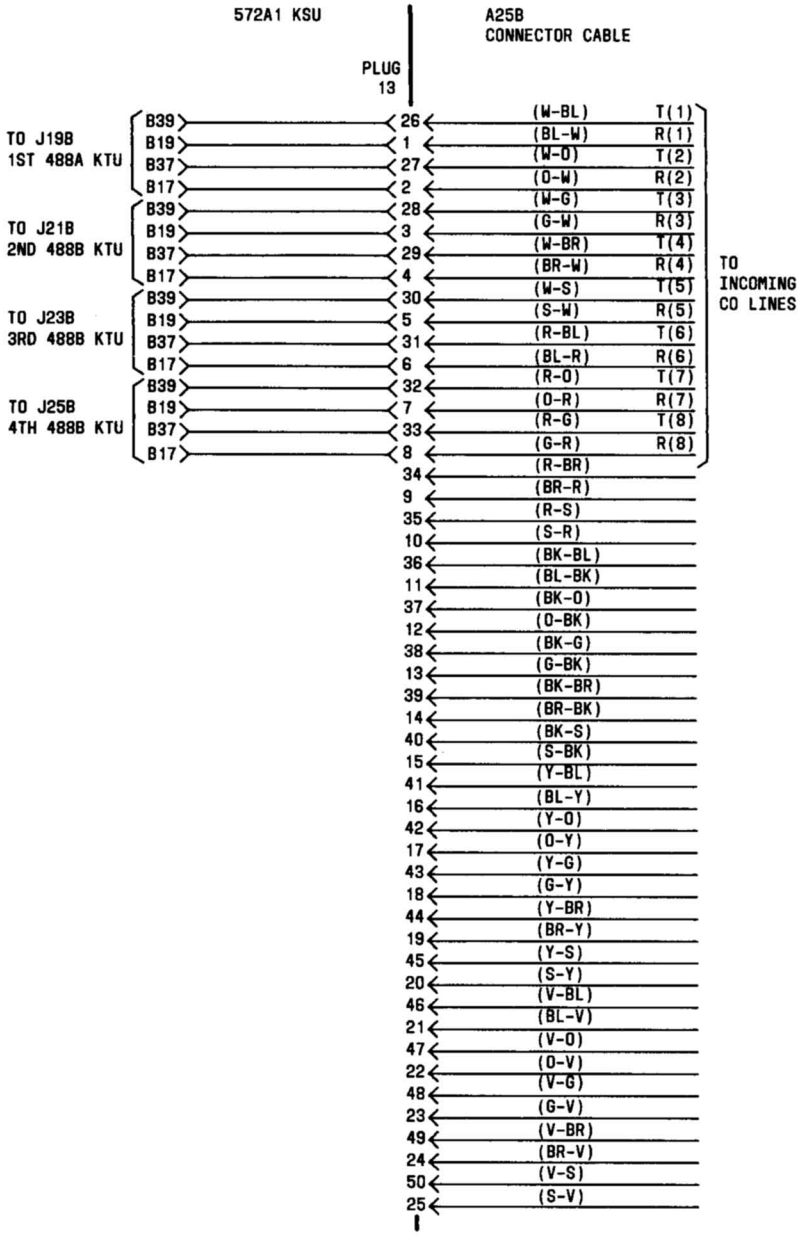

Fig. 35—Terminations of Incoming CO/PBX Lines in 572A1 KSU

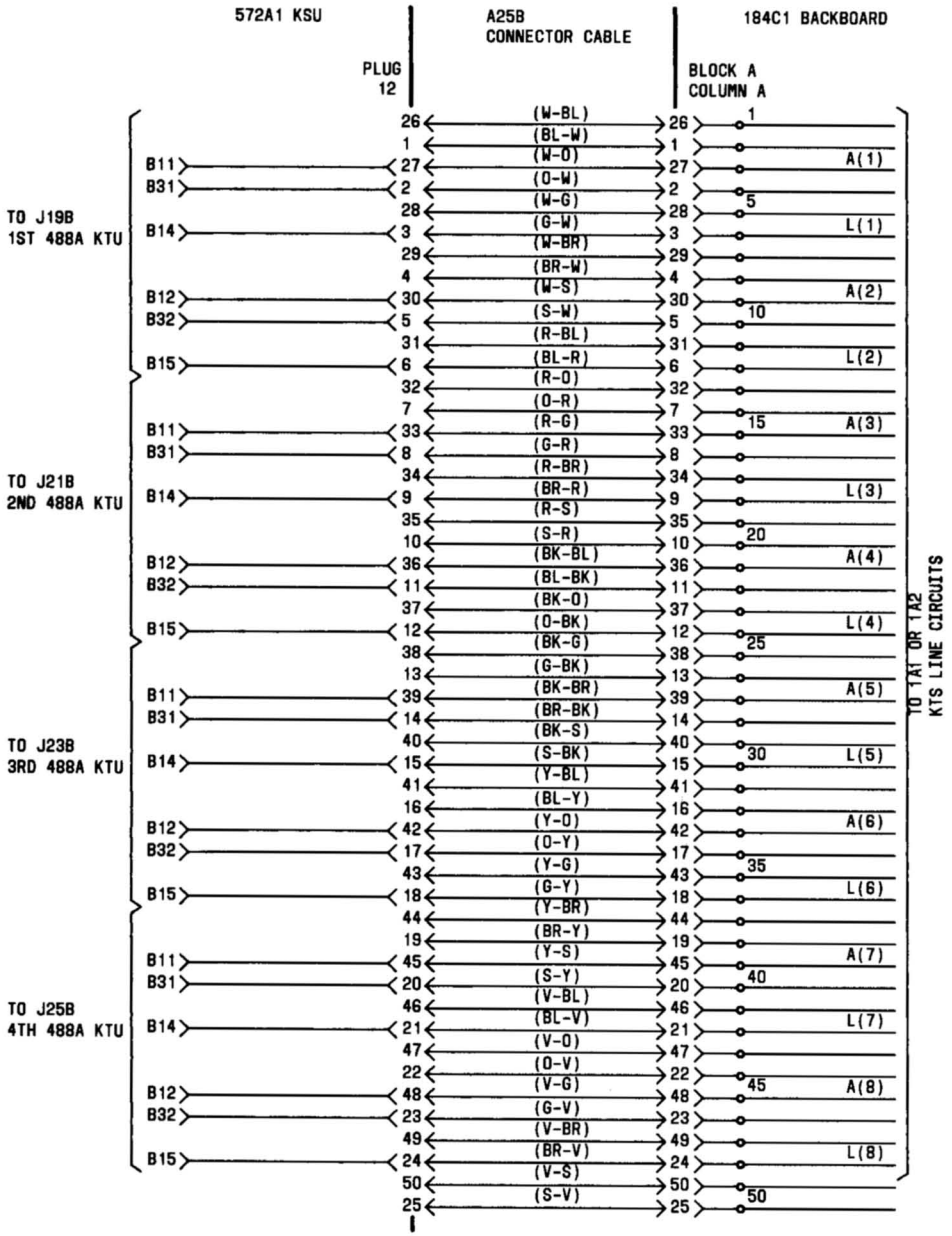

Fig. 36—Connections Between Plugs 12 and 1 to 4 of 572A1 Key Service Unit and 184C1 Backboard (Sheet 1 of 5)

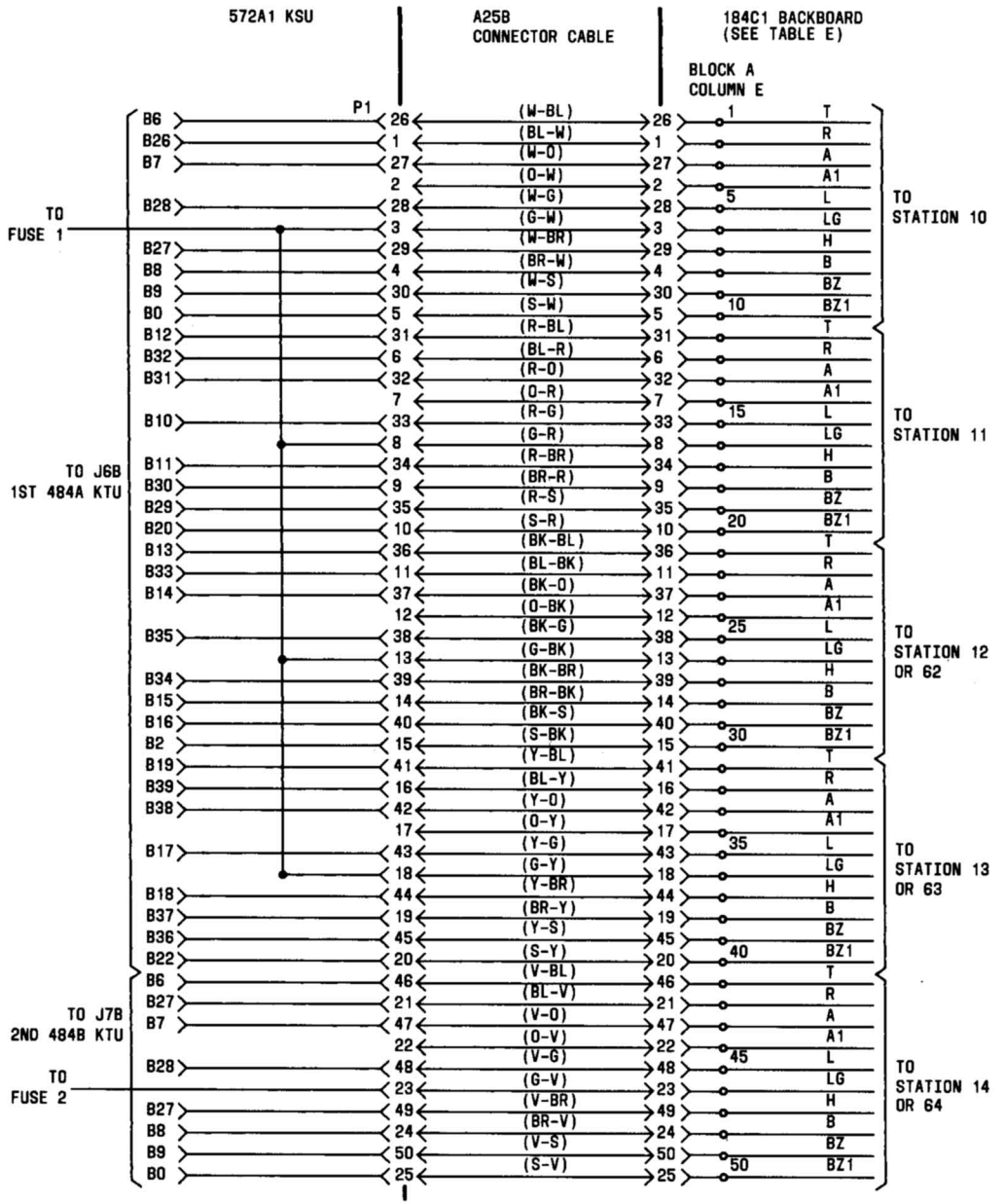

Fig. 36—Connections Between Plugs 12 and 1 to 4 of 572A1 Key Service Unit and 184C1 Backboard (Sheet 2 of 5)

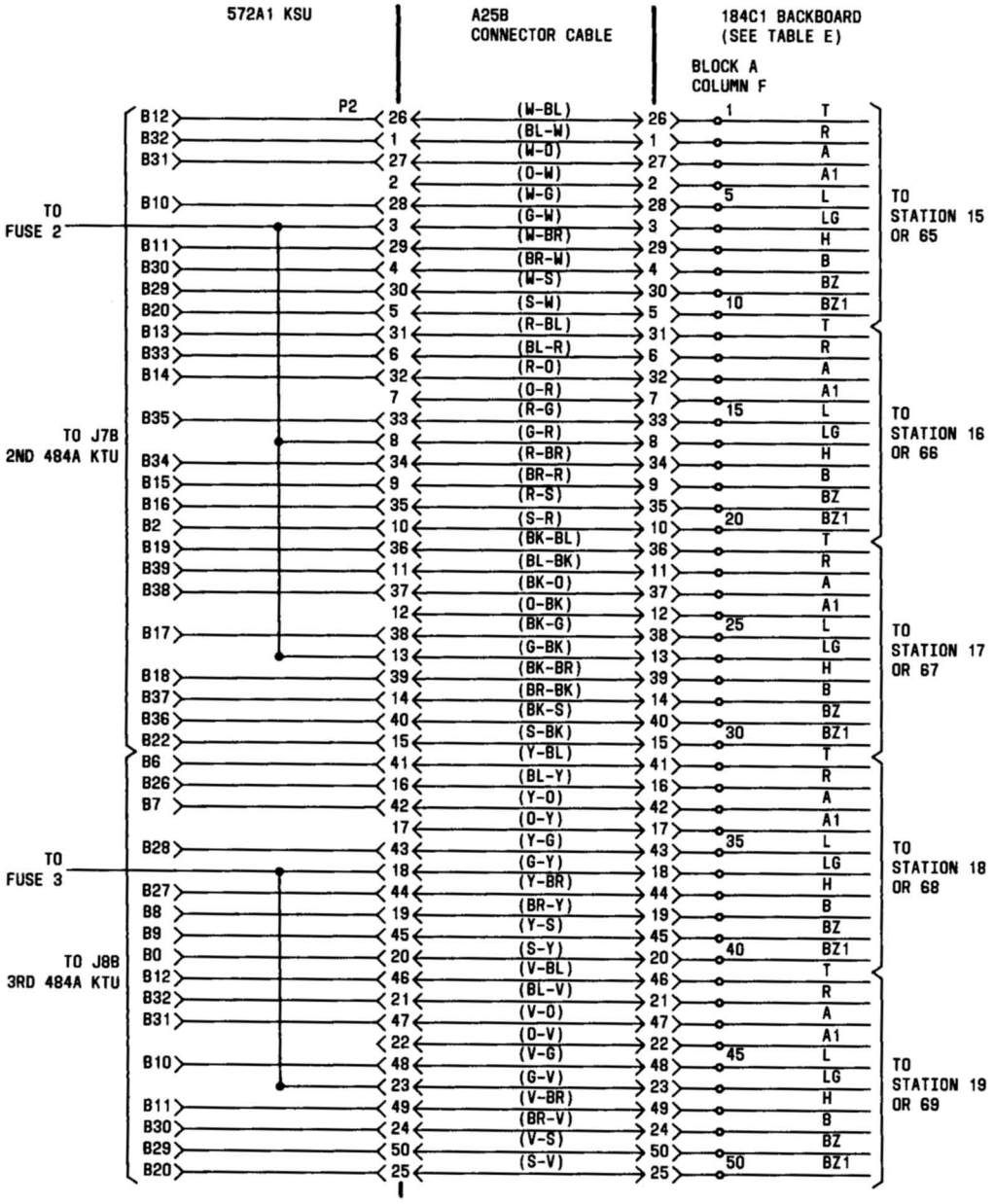

Fig. 36—Connections Between Plugs 12 and 1 to 4 of 572A1 Key Service Unit and 184C1 Backboard (Sheet 3 of 5)

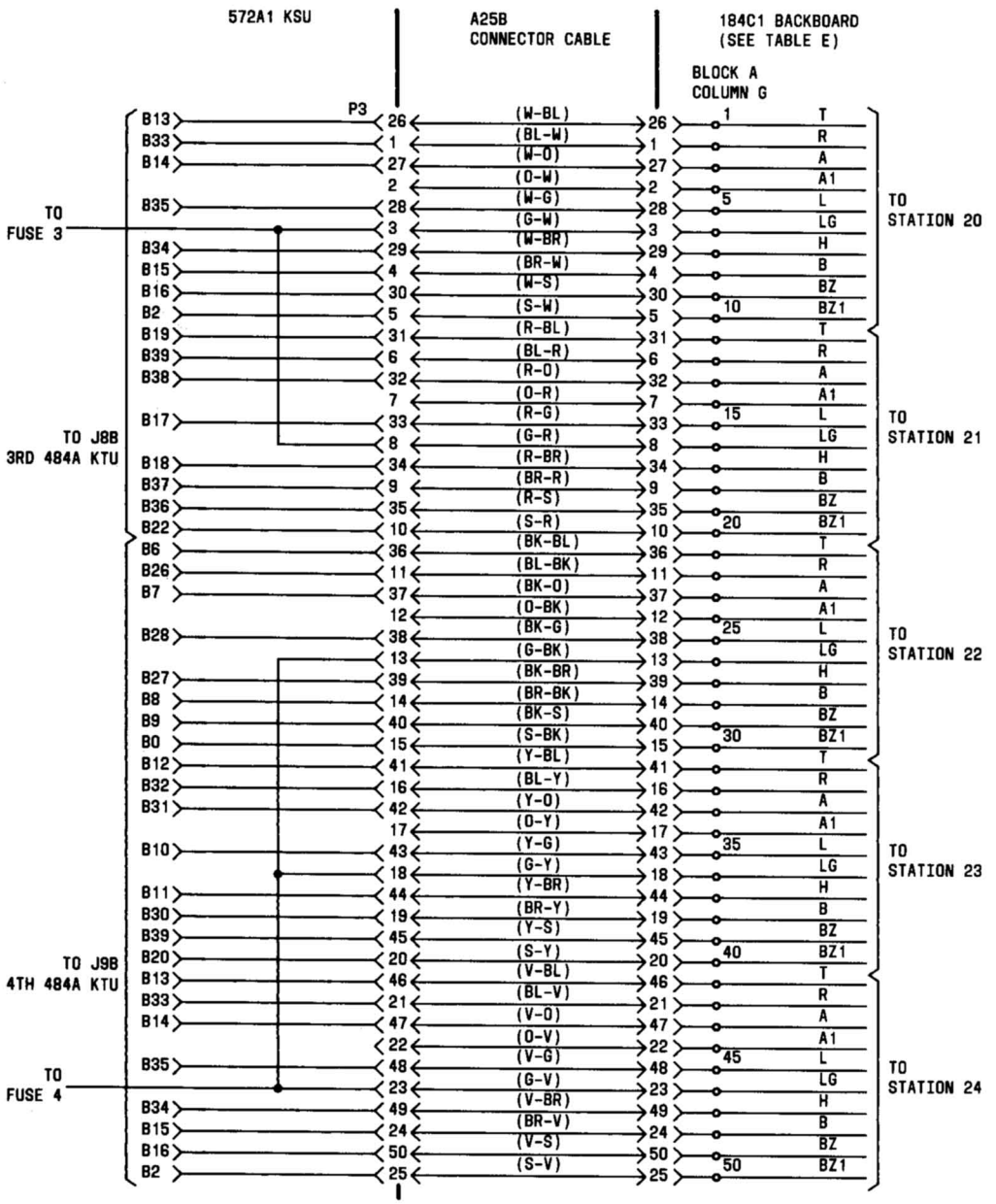

Fig. 36—Connections Between Plugs 12 and 1 to 4 of 572A1 Key Service Unit and 184C1 Backboard (Sheet 4 of 5)

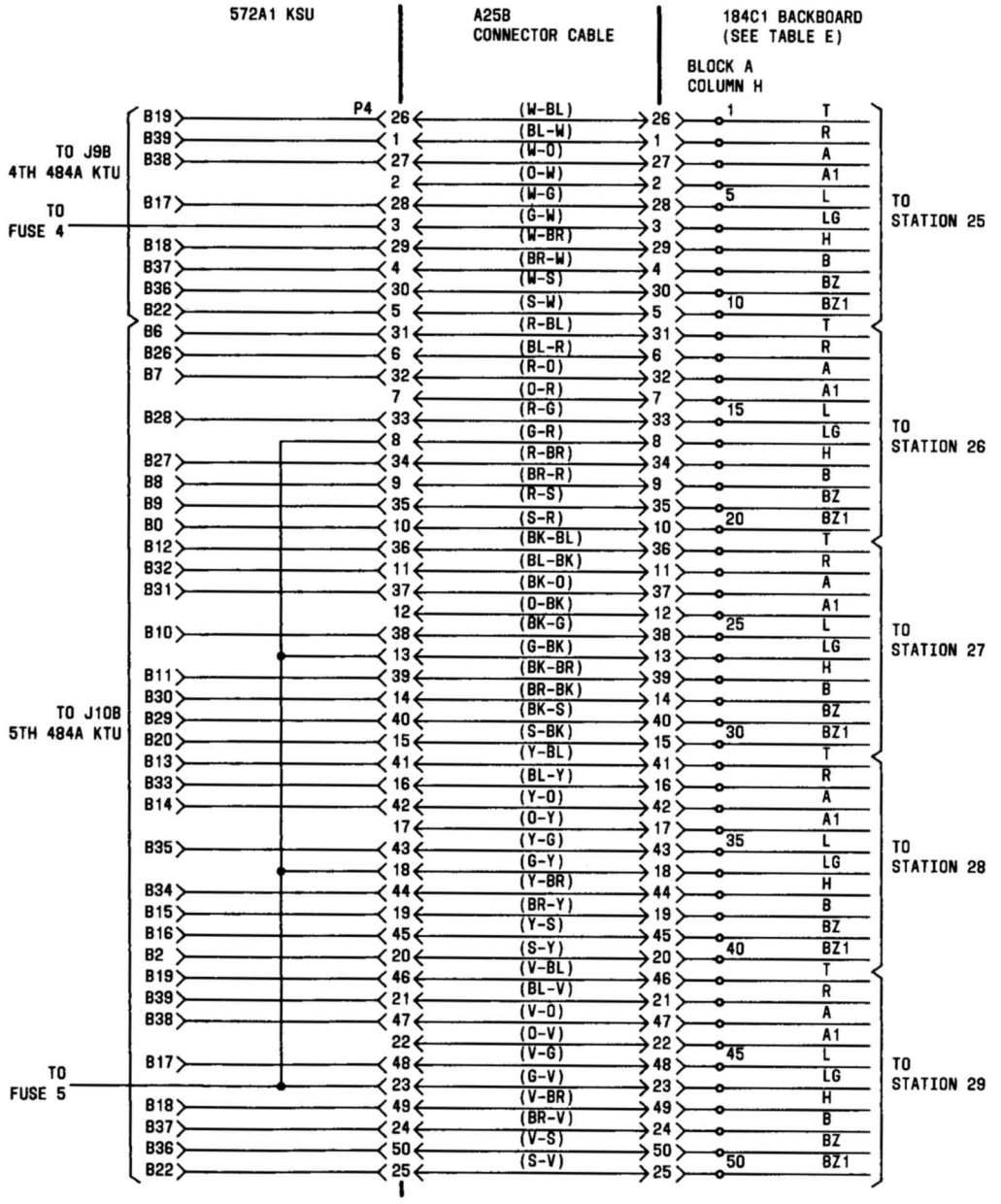

Fig. 36—Connections Between Plugs 12 and 1 to 4 of 572A1 Key Service Unit and 184C1 Backboard (Sheet 5 of 5)

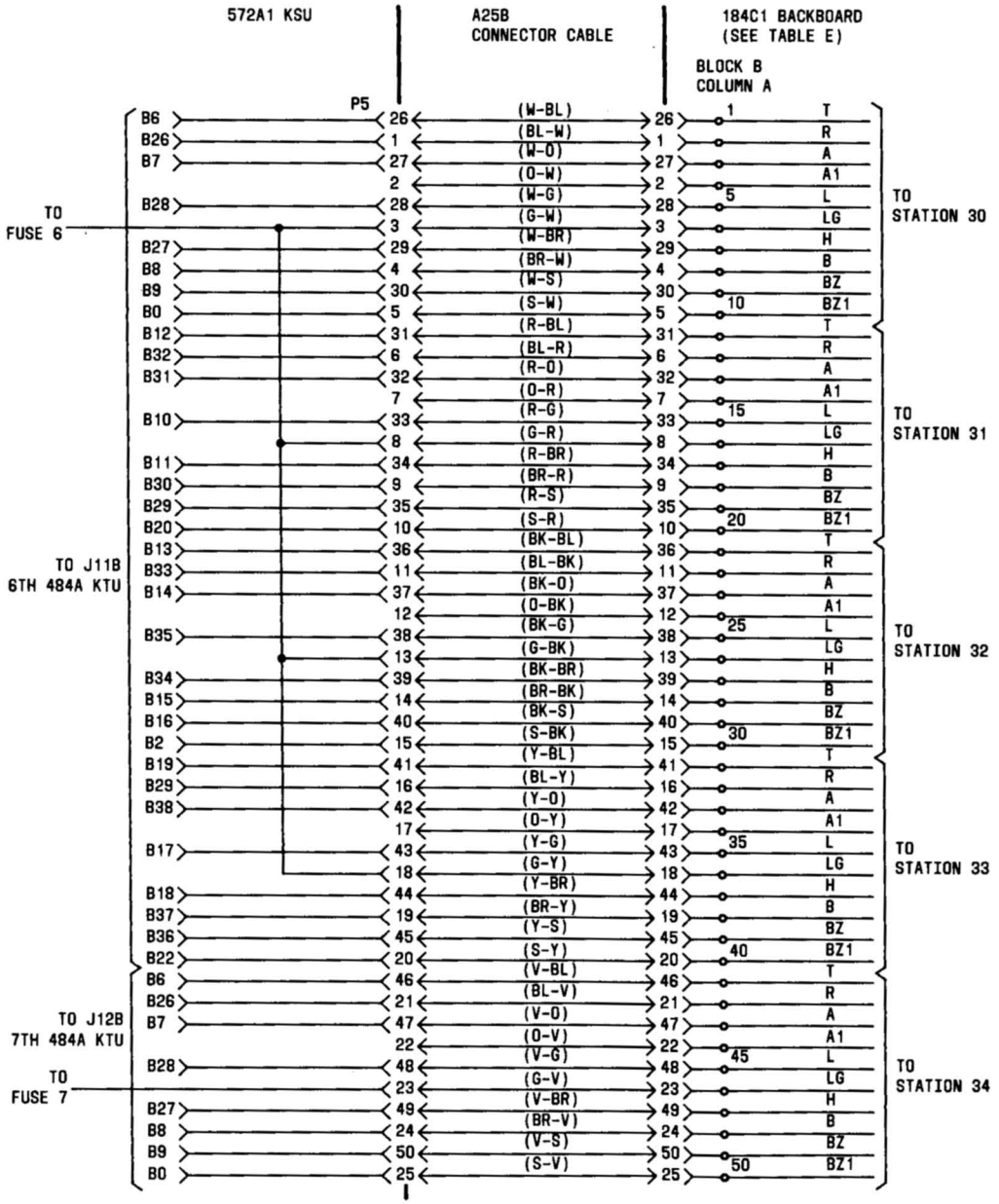

Fig. 37—Connections Between Plugs 5 to 8 of 572A1 Key Service Unit and 184C1 Backboard (Sheet 1 of 4)

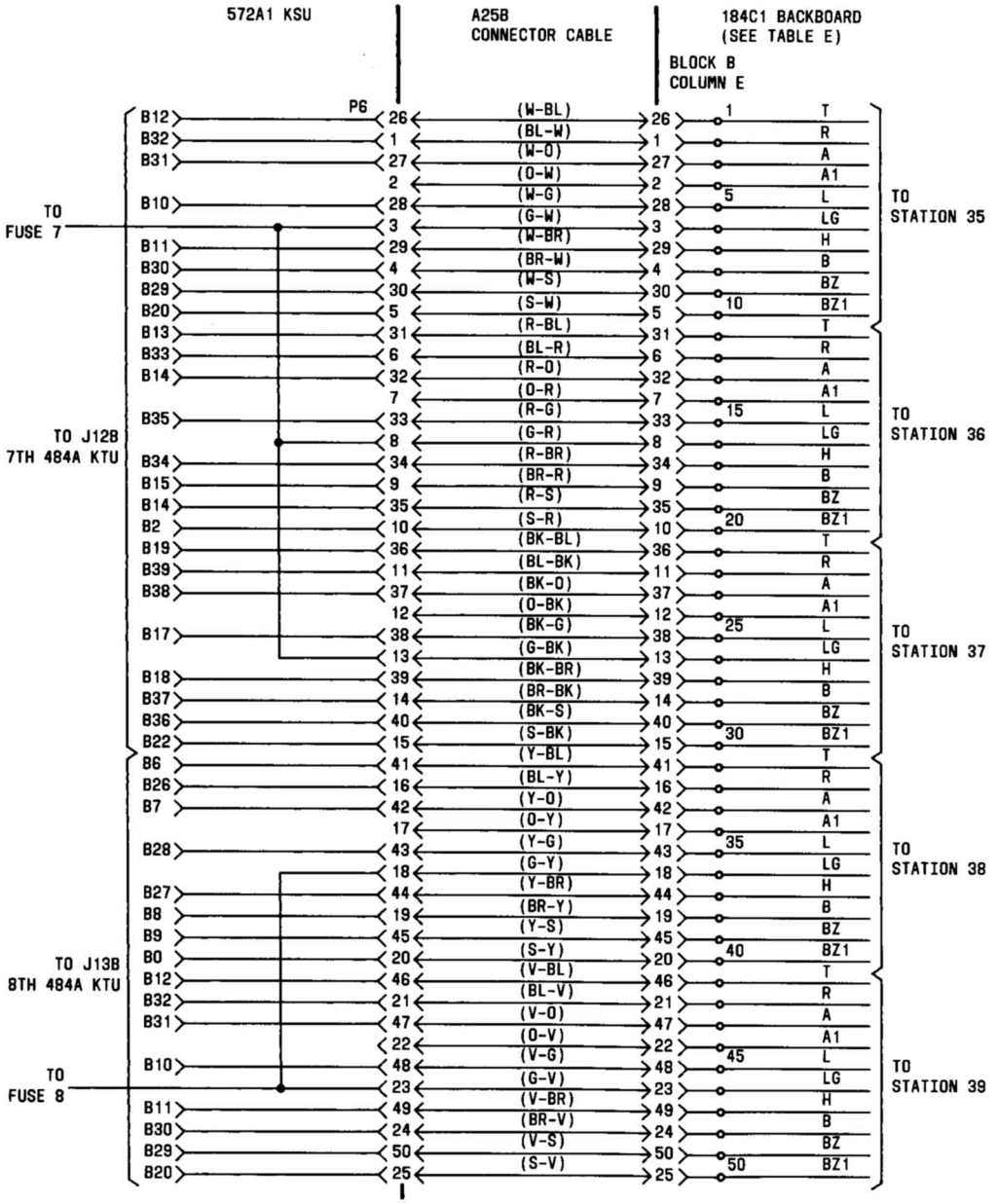

Fig. 37—Connections Between Plugs 5 to 8 of 572A1 Key Service Unit and 184C1 Backboard (Sheet 2 of 4)

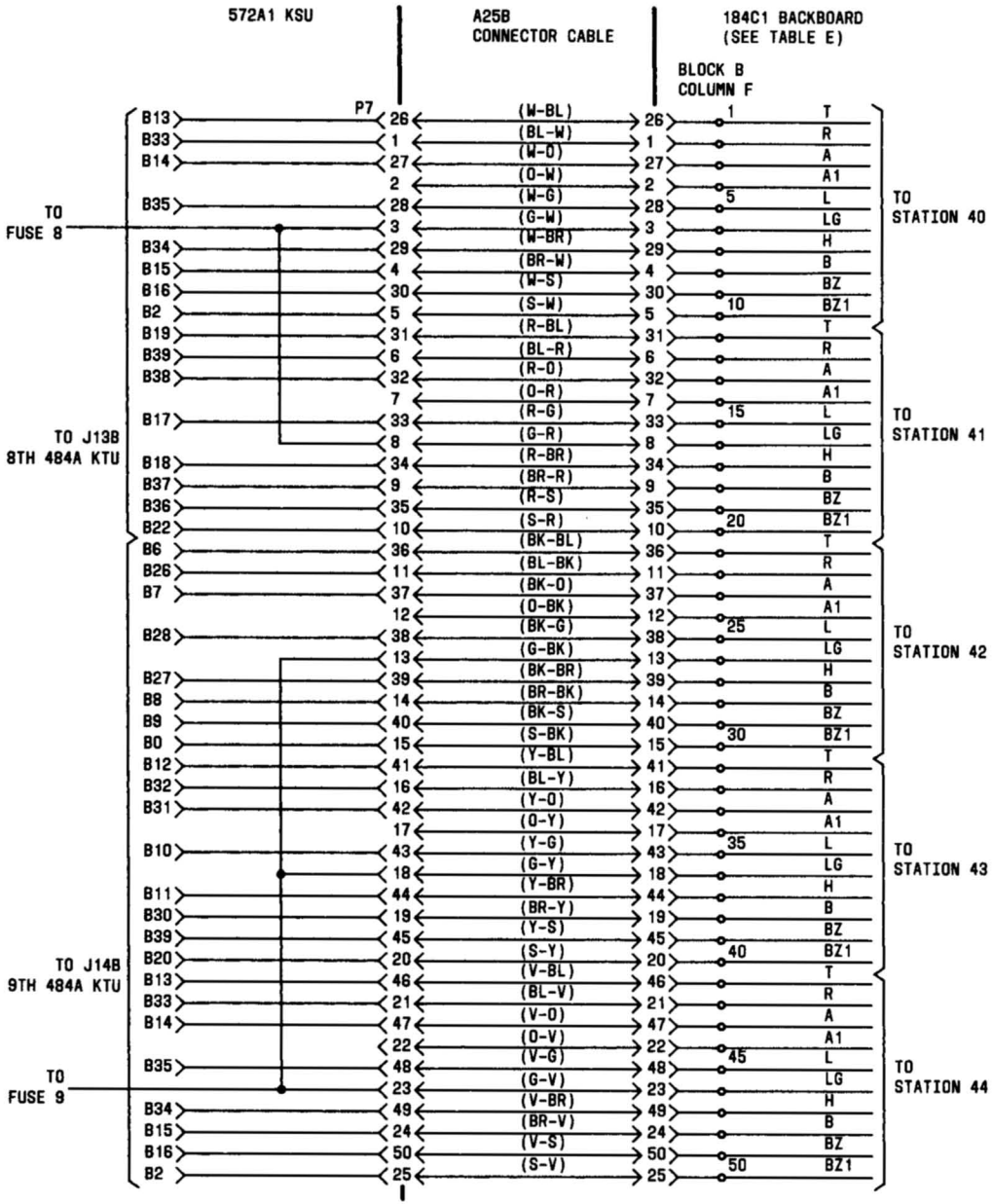

Fig. 37—Connections Between Plugs 5 to 8 of 572A1 Key Service Unit and 184C1 Backboard (Sheet 3 of 4)

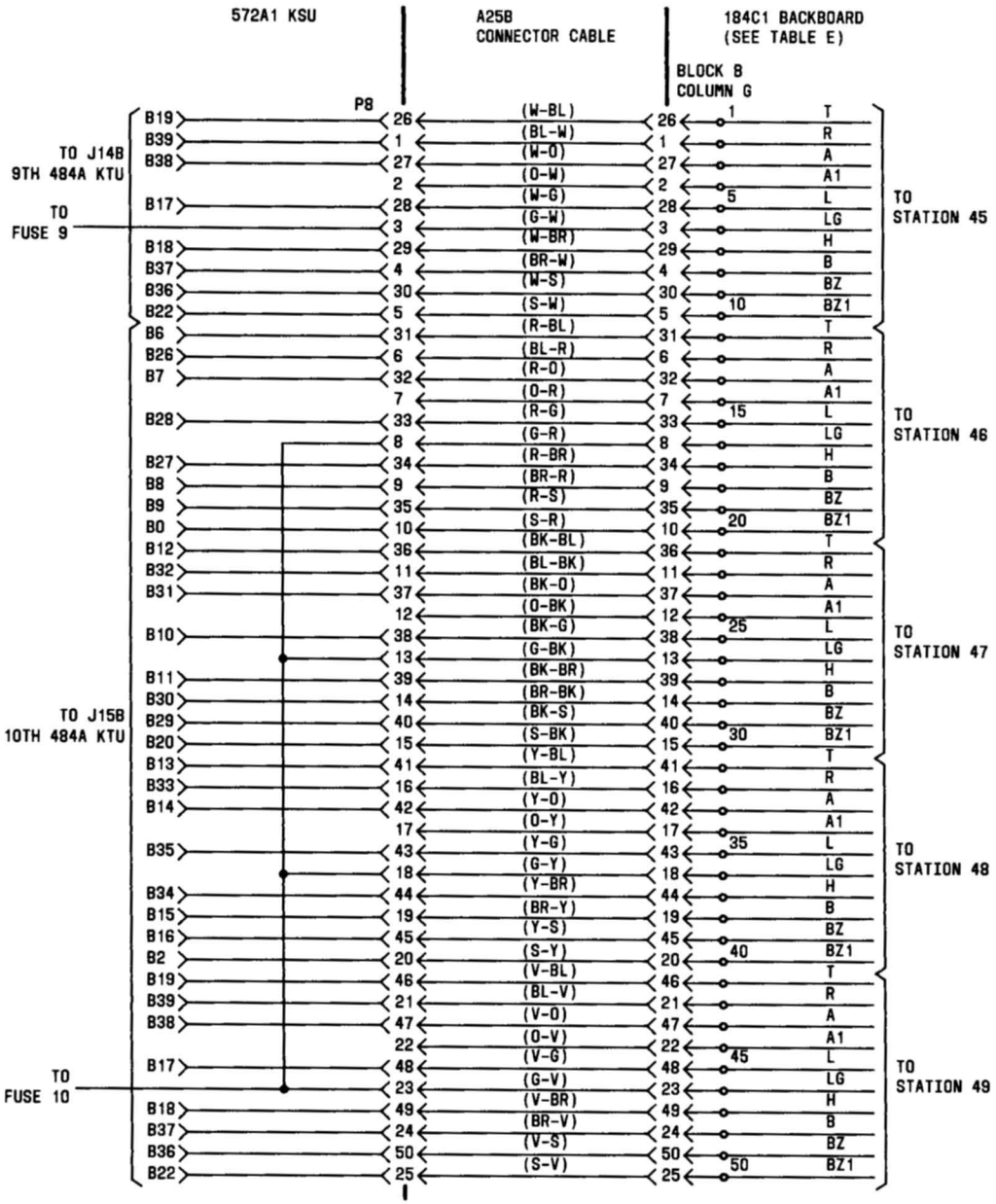

Fig. 37—Connections Between Plugs 5 to 8 of 572A1 Key Service Unit and 184C1 Backboard (Sheet 4 of 4)

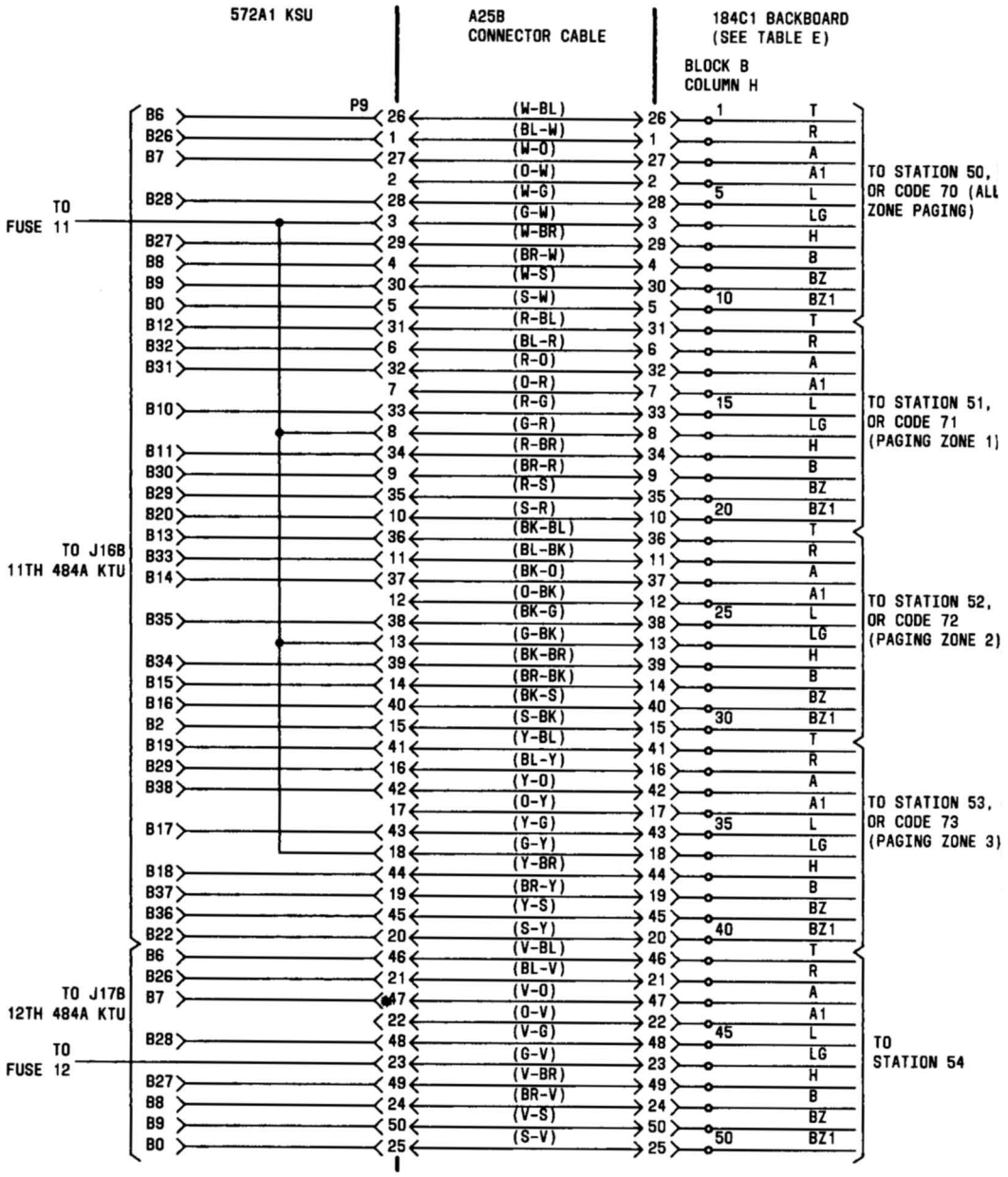

Fig. 38—Connections Between Plugs 9 to 11 of 572A1 Key Service Unit and 184C1 Backboard (Sheet 1 of 3)

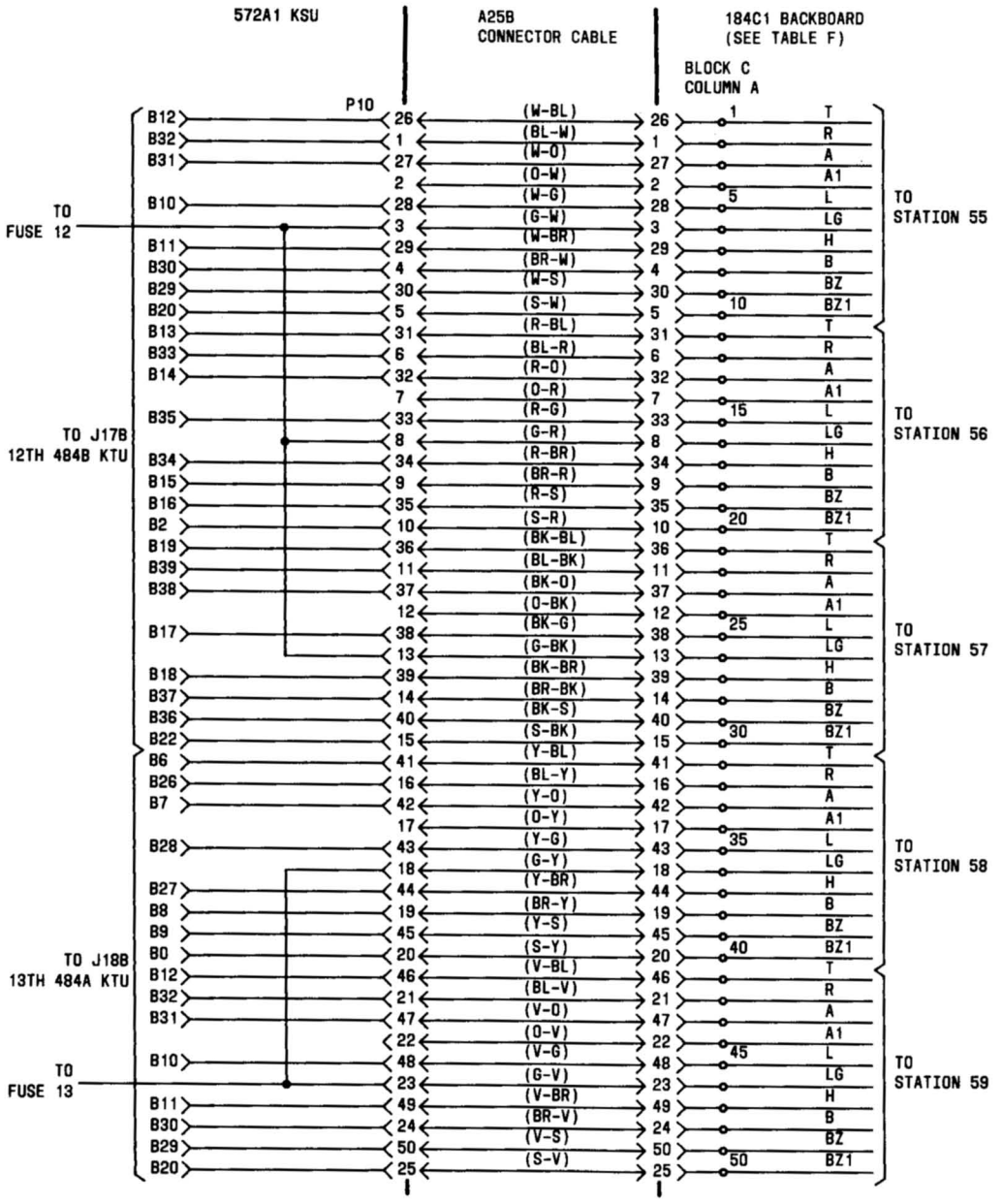

Fig. 38—Connections Between Plugs 9 to 11 of 572A1 Key Service Unit and 184C1 Backboard (Sheet 2 of 3)

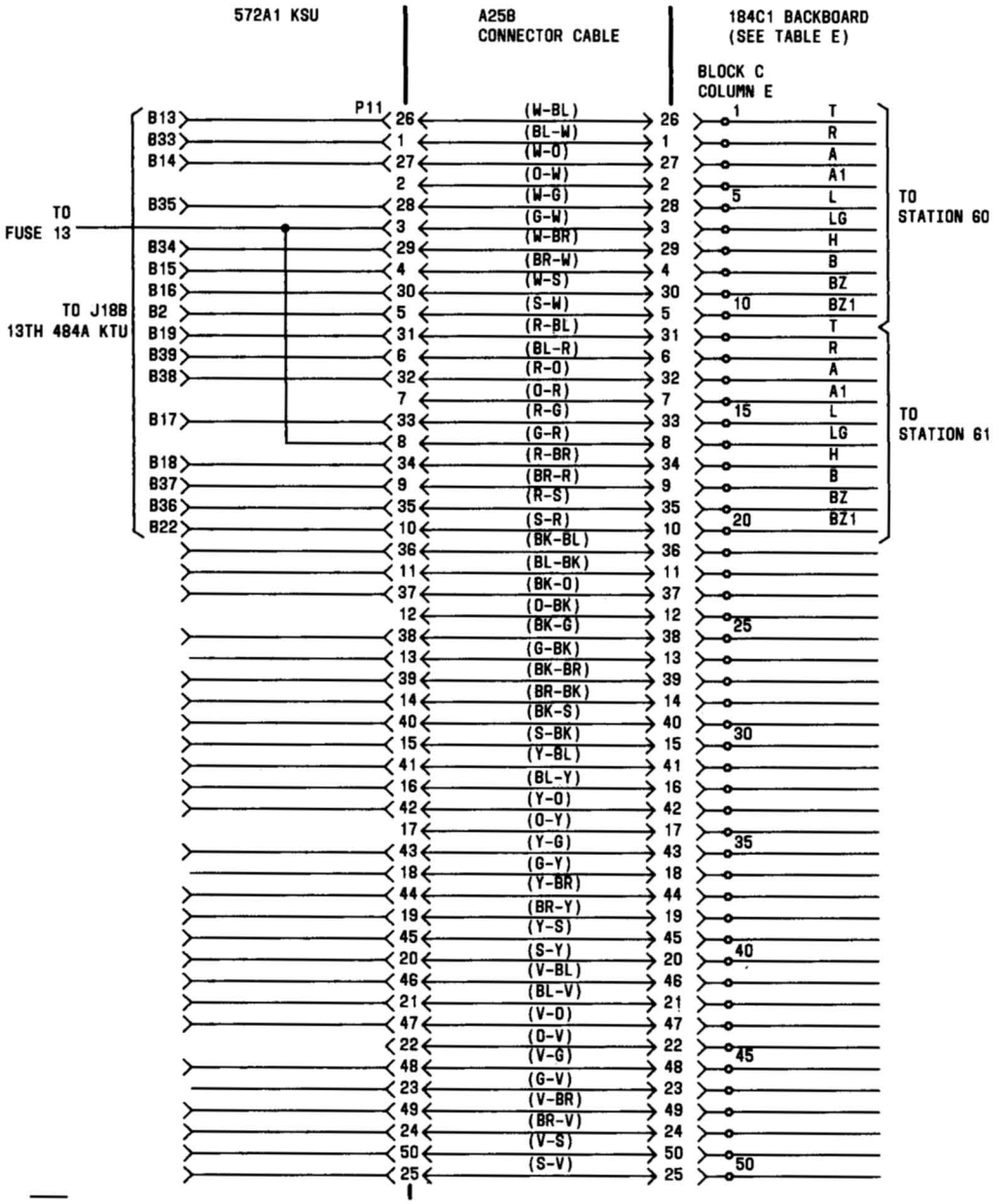

Fig. 38—Connections Between Plugs 9 to 11 of 572A1 Key Service Unit and 184C1 Backboard (Sheet 3 of 3)

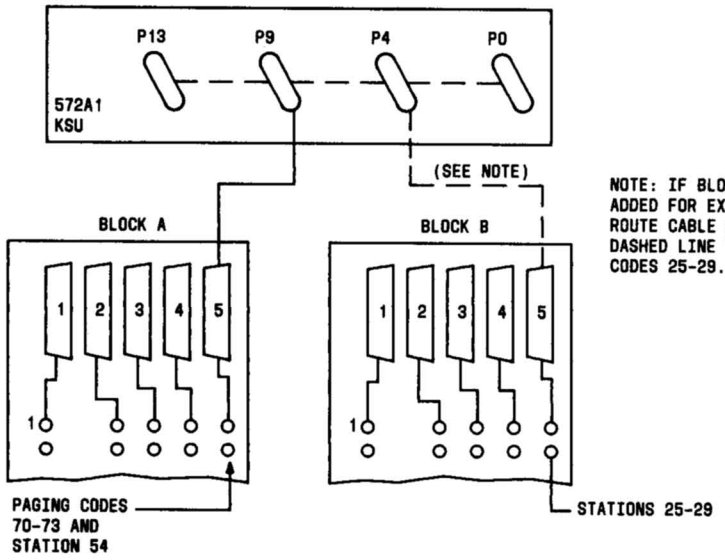

A. SMALL SYSTEM USING ONE BLOCK INITIALLY AND HAVING PAGING ACCESS

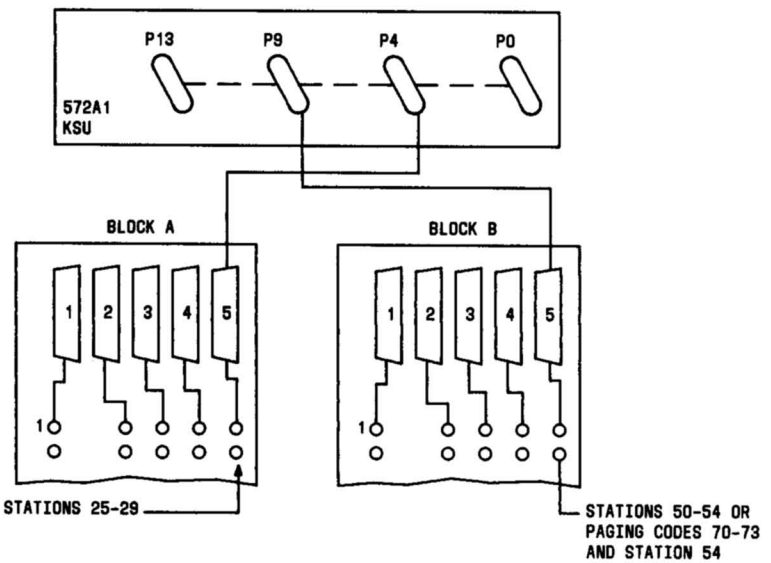

B. LARGER SYSTEM INITIALLY USING TWO BLOCKS WITH OR WITHOUT PAGING ACCESS

Fig. 39—Cabling Methods When Paging Access is Supplied

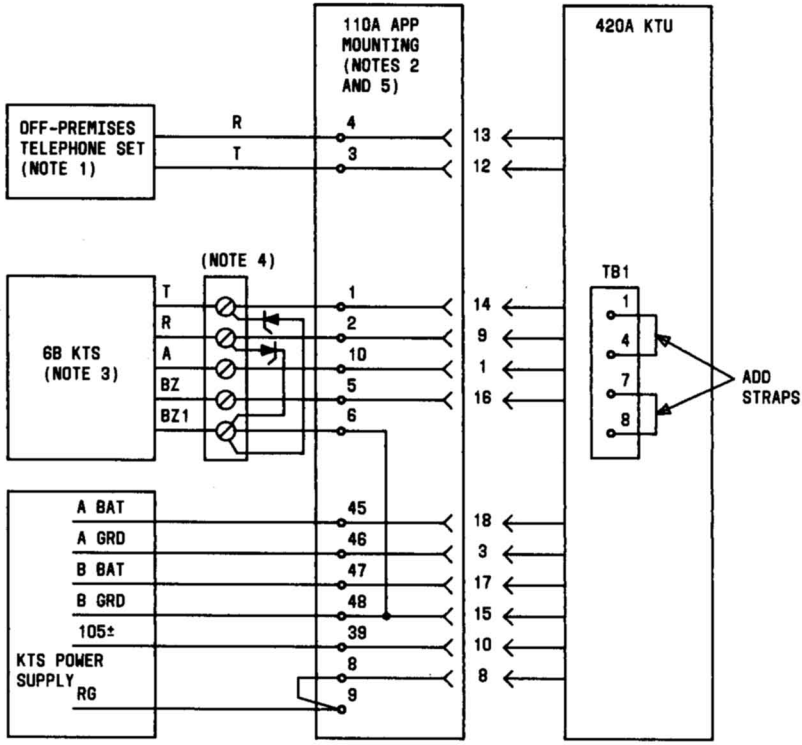

NOTES:

1. MAXIMUM STATION CONDUCTOR LOOP IS 500 OHMS. TELEPHONE SET MAY BE EQUIPPED WITH A TOUCH-TONE DIAL PROVIDED 6B KTS IS SO EQUIPPED. WIRE SET WITH BRIDGED RINGER.
2. MAKE CONNECTIONS ON LEFT BLOCK IF 420A IS IN P1 OR ON RIGHT BLOCK IF IN P2.
3. ANY DIGIT MAY BE ASSIGNED TO OFF-PREMISES STATION. TERMINATE LEADS ON 184C1 BACKBOARD DEPENDING ON CODE ASSIGNED.
4. 521AA DIODES MUST BE INSTALLED FROM TIP AND RING TO GROUND AS SHOWN. USE CONNECTING BLOCK AS SHOWN AS TERMINATING POINT.
5. IF MORE THAN TWO 420A KTUS ARE REQUIRED, A 642A PANEL CAN BE USED.

Fig. 40—Connections for Off-Premises Extension

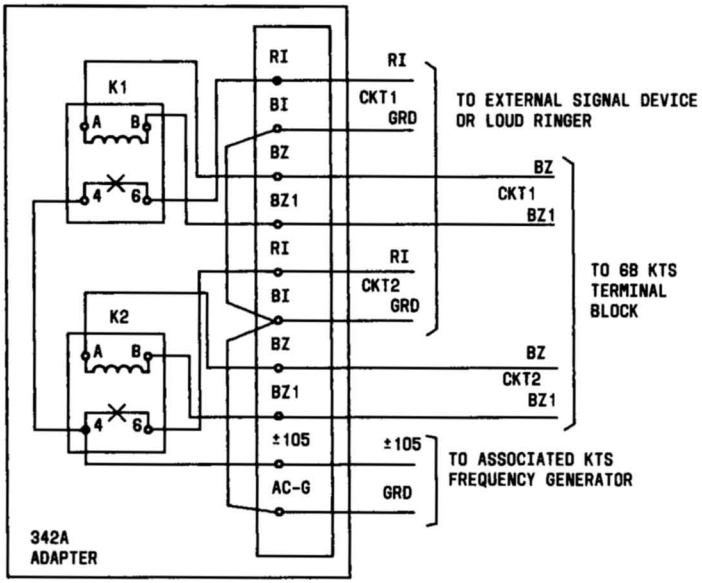

Fig. 41—Connections for External Signal or Loud Ring (324A Adapter)

ELECTRICAL PROTECTION — STATIONS AND CUSTOMER PREMISES EQUIPMENT

CONTENTS PAGE

1. GENERAL 2

2. STATIONS REQUIRING PROTECTION . . 3

A. *National Electrical Code (NEC)* Requirement 3

B. Bell System Requirements 3

3. CLASSIFICATION OF PLANT AND AREAS . 3

A. General 3

B. Plant Exposed to Power 4

C. Plant Exposed to Lightning . . . 4

D. Plant Serving Customer Premises Electronic Equipment 4

E. Unexposed Plant 4

F. Exposed Cable Shield and Pairs . 5

G. Examples of Exposed Pairs . . . 5

H. Exposed Drops from Unexposed Cable 8

4. PROTECTORS FOR EXPOSED STATIONS AND PBXs 8

A. General 8

B. Fuseless Protectors 9

C. Fuse-Type Protectors 12

D. Protected Terminals 12

E. PBX Protection—General 13

CONTENTS PAGE

F. Customer Premises Electronic Equipment Protection 13

G. Key Telephone System Protection . 14

5. LOCATION OF PROTECTORS 16

A. General 19

B. Indoor Stations 19

C. Outdoor Stations 19

6. STATIONS AND PBXs REQUIRING SPECIAL PROTECTIVE MEASURES 19

A. General 20

B. Power Substation Vicinity 20

C. Remote Locations 21

D. Commercial Radio and Television Transmitting and Receiving Stations . 22

E. Mobile Homes and Recreational Vehicles 22

7. STATION AND PBX PROTECTOR GROUNDING 23

A. General 23

B. Effective Station Grounding Systems . 23

C. Hazard of Separate Grounds . . . 23

D. Selection of Grounds 25

8. BONDING OF POWER AND TELEPHONE GROUNDS 26

NOTICE

Not for use or disclosure outside the
Bell System except under written agreement

Printed in U.S.A.

CONTENTS PAGE

9. BONDING AND GROUNDING IN HIGH-RISE AND LOW-WIDE COMMERCIAL AND INDUSTRIAL BUILDINGS CONTAINING ELECTRONIC STATION EQUIPMENT . . 27

A. General 27

B. Recommendations 27

10. REFERENCES 28

Appendix 1

1. GENERAL

1.01 This section describes the requirements for protection of telephone stations at customer premises. The purpose of station protection is to ensure the safety of telephone users and telephone employees. Station protection also reduces the possibility of damage to the customer premises and to the telephone plant. In certain cases, the use of protective devices such as gas tubes will help considerably in maintaining reliability of telephone service.

1.02 This revision includes the addition of bonding and grounding recommendations for use in high-rise and low wide-area commercial and industrial buildings, and the protection of electronic station equipment. Due to the extensive changes in this reissue, no revision arrows have been used to denote significant changes. The changes included in Addendum 876-300-100, Issue 1, have been incorporated in this revision. Revisions are made to mobile home and recreational vehicle requirements, to Bell System power exposure requirements, and to the classification of plant exposed to lightning in metropolitan areas. Minor revisions are made to agree with the 1978 ***National Electrical Code (NEC)*** requirements.

1.03 An essential part of any protective system is the adherence to good construction and maintenance practices. The possibility of an accident or of structural damage resulting from contact with electric wires or from exposure to lightning can be significantly reduced where standard clearances are observed and protectors are properly installed and maintained. A range exists within which protective devices operate. In some cases the level of protection afforded may not adequately protect personnel and equipment. Supplementary protection will then be necessary. Various methods, such as the following, are used to accomplish this required coordination:

(a) Telephone instruments and wiring are insulated with materials capable of withstanding dielectric stresses to which they are exposed (including a certain safety margin).

(b) When equipment components are sensitive to voltages and currents less than the minimum operating thresholds of the normal station protectors, supplementary protection is supplied or is specified.

1.04 In determining the protection requirements for a particular design of telephone plant, the exposure status with regard to power and low-frequency induction, ground potential rise and lightning must be considered. Lightning and power exposure status is related to the environment of the telephone plant, eg, whether the environment is metropolitan, suburban, or rural, as defined in Section 876-100-100, Appendix I. For example, aerial cable in metropolitan and in some suburban areas will generally be exposed to accidental contact with power wires, but may be minimally exposed to lightning because of the shielding afforded by overhead power wires and tall structures. In rural areas, however, aerial cable will most likely be exposed to both power and lightning. In rural areas and in some suburban areas, buried cable will usually be exposed to lightning, and all stations served by the cable will require protection even though there may be no exposure to power wires. Requirements for station protection are sometimes based on administrative considerations and on possible future rearrangements of outside plant construction, particularly with regard to changes in power distribution voltages that might affect the exposure status of telephone plant.

1.05 In general, block and house cable facilities are not exposed to power circuits carrying voltage high enough to require station protection. If exposure to lightning is a factor, however, station protection may be necessary. For example, telephone facilities serving extension stations or speaker locations of a farm interphone system may not be subject to contact with power wires, but could be exposed to lightning. Such stations would require protection.

1.06 In the following discussion, the term "fuse cable" generally refers to 26- or 24-gauge copper conductors. The term "fine gauge" is also used with the same meaning. If the plant consists of aluminum conductors, then 24- or 22-gauge would be considered as "fuse cable" or "fine gauge," respectively. These sizes of aluminum conductors have fusing characteristics comparable to 26- and 24-gauge copper conductors, respectively.

2. STATIONS REQUIRING PROTECTION

A. *National Electrical Code (NEC)* Requirement

2.01 The requirement for protecting communication circuits is defined in Article 800-2 of the 1978 ***NEC**** as follows:

> ***Protective Devices:*** "A protector approved for the purpose shall be provided on each circuit run partly or entirely in aerial wire or aerial cable not confined within a block. Also, a protector approved for the purpose shall be provided on each circuit, aerial or underground, so located within the block containing the building served as to be exposed to accidental contact with light and power conductors operating at over 300 volts [rms] to ground. The word 'block' as used in this article means a square or portion of a city, town, or village enclosed by streets and including the alleys so enclosed but not any street. The word 'exposed' as used in this article means that the circuit is in such a position that in case of failure of supports or insulation, contact with another circuit may result.
>
> ***Location:*** The protector shall be located in, on, or immediately adjacent to the structure or building served and as close as practicable to the point at which the exposed conductors enter or attach."

*Reprinted from the 1978 National Electrical Code, Copyright National Fire Protection Association, Boston, MA 02210.

2.02 The ***NEC*** requirements are primarily based on power exposure and only incidently on lightning exposure. Bell System requirements, however, must consider all sources of electrical disturbances or exposure, including lightning, power induction, and ground potential rise, and must assure that adequate protection is provided.

B. Bell System Requirements

2.03 Telephone circuits (cable, wire, strand, etc) that are subject to disturbances from ***lightning, ground potential rises (GPR),*** or possible ***contact*** or ***induction*** from electrical power circuits in excess of 300 volts [rms] to ground are called ***exposed circuits.*** A station served by such exposed circuits including an exposed line, drop, or terminal is therefore an ***exposed station*** requiring protection.

> ***Note: All references to electric power wires will apply to circuits operating in excess of 300 volts rms to ground.***

2.04 Protection against lightning surges is obtained by using spark gap station protectors. Protection against power exposure is obtained by using fusible links between the station and the exposure in addition to spark gaps. Additional protection of station equipment with low impedance paths to ground is obtained by using sneak current fuses. These protection applications are discussed subsequently in this practice.

2.05 Many grounding and fusing applications depend on the presence or absence of a multi-grounded-neutral power system. It is the responsibility of the protection engineer to obtain the locations of MGN and non-MGN power systems in his area. This information should be dispensed to all personnel involved in the design, construction, and repair of outside plant facilities, and those responsible for installation and maintenance of customer premises equipment. One method for identifying MGN and non-MGN areas would be to obtain maps from the local power utilities which indicate these areas. These maps could be updated periodically to reflect any changes in the MGN status of the power system.

3. CLASSIFICATION OF PLANT AND AREAS

A. General

3.01 From an administrative standpoint, it is not practical to consider each line or circuit individually to determine whether or not it is exposed to lightning, accidental contact with power wires, or hazardous induction. The usual practice, therefore, is to establish areas in which all stations are considered as exposed and requiring protection, or as unexposed and not requiring protection.

With the exception of a building or a group of buildings having a feeder cable used exclusively to serve stations within the buildings, the entire area of a block should be classified as either exposed or unexposed.

3.02 Station protection including protectors, fusible links (cable fuse), and station fuses as applicable, should be provided initially in areas that appear to be unexposed if the possibility exists that future plant rearrangements could result in exposure. In addition, sneak current protection (heat coils or sneak fuses) may also be required initially in plant serving station equipment having low impedance paths to ground, if future plant rearrangements could result in exposure to power.

3.03 In determining the exposure status of telephone plant, consideration should be given to the possibility of future changes and/or additions to the power distribution system. In some cases, it may be advisable to provide station protection initially as discussed in paragraph 3.02.

B. Plant Exposed to Power

3.04 All aerial plant (cable shield, supporting strand, or wire plant including distribution wire) is generally considered exposed, whether power is present or not, since there is no assurance that power will not be built at some later date. The only exception is when the aerial plant is located within a block.

3.05 Underground or buried plant subject to possible power faults resulting in a rise in ground potential or 60-Hz induction exceeding 300 volts (rms) must be considered as exposed. Buried and underground plant must be considered as exposed if connected to exposed aerial plant. Buried plant must be considered as exposed when placed at random separation with primary power distribution circuits (over 300 volts rms to ground).

C. Plant Exposed to Lightning

3.06 In general, it must be assumed that all telephone stations served by aerial plant are exposed to lightning, with the exception of stations in metropolitan areas where buildings are close together and sufficiently high (relative to the telephone plant) to provide "cone-of-protection" shielding. Two cones overlapping the telephone cable, one from each side, are preferable. (The cone-of-protection principle is explained in Section 876-210-100.) In such situations, lightning strokes are generally diverted from the telephone plant, and surge current is harmlessly dispersed over public water systems and/or other extensive buried metallic structures.

3.07 ***Underground or buried plant*** must be considered as exposed to lightning ***except:***

(a) Plant located in a metropolitan area under the conditions discussed in paragraph 3.06.

(b) Plant located in an area where the soil resistivity is approximately 100 meter-ohms or less and the incidence of thunderstorm days does not exceed an average of five per year. However, plant and stations located above the average altitude of the surrounding terrain or associated with structures such as fire towers, radio stations, etc, must be considered as exposed to lightning regardless of soil resistivity and thunderstorm incidence.

(c) Plant located where significant data is available to indicate that lightning damage is negligible.

D. Plant Serving Customer Premises Electronic Equipment

3.08 In view of the susceptibility to damage due to foreign voltages or transients in electronic station equipment, proper bonding and grounding must always be employed. If there is any question as to exposure of the cable plant or power circuits serving the equipment, then protection, should be applied to the facilities. If the building containing the electronic station equipment is exposed to lightning then the grounding requirements discussed in Part 9 should be employed. From an administrative standpoint, it may be advisable to require protection, bonding, and grounding, as described in this practice, in all installations serving electronic station equipment.

E. Unexposed Plant

3.09 Plant is considered ***unexposed*** when neither subject to possible contact with power wires operating in excess of 300V (rms) to ground, nor exposed to the effects of lightning, nor rise in ground potential, nor low frequency induction. Underground or buried cable is not considered exposed to power contact when placed in the same trench with primary distribution circuits, if standard

separations (not random separation) are maintained, and the underground or buried plant is not fed by exposed plant (see paragraphs 3.10 to 3.13).

WARNING: When telephone plant is considered unexposed in an urban environment because it is underground or buried all the way back to the central office, and cone-of-protection shielding is adequate, caution is advised if the associated power facilities are aerial without cone-of-protection shielding. Under such conditions, ac-powered telephone equipment may be damaged by lightning surges on the power facilities serving the telephone equipment. Even though the telephone plant is considered unexposed in this particular case, protectors should still be used, thus providing a method of common bonding and grounding (see paragraph 7.06).

F. Exposed Cable Shield and Pairs

3.10 In reviewing a particular cable to determine its exposure status or the requirement for protection, it will be helpful to consider the cable in terms of ***exposed cable shield*** and ***exposed pairs.***

> ***Note:*** Protection applications must consider all sources of exposure; not only power contact but ground potential rise, power induction and lightning. Protection against lightning surges is obtained by using spark gap station protectors. Protection against power exposure is obtained by using fusible links between the station and the exposure in addition to spark gaps.

Exposed Cable Shield

3.11 Exposed cable shield is defined as any cable shield that has a possibility of coming in physical contact with power. The standard practice is to place fuse (fine gauge) cable at the aerial-underground junction (Fig. 1) to divide aerial cable shield exposed to power from unexposed underground cable. With fuse cable in all aerial branches, the requirements for fusing are satisfied; however this does not eliminate the need for carbon blocks and sneak current protection (heat coils or sneak fuses). If fuse cable is omitted at an aerial-underground junction the entire underground cable must be considered as ***exposed.***

3.12 The purpose of fuse cable is to prevent the overheating of protectors and terminating cable in the central office and at the station (resulting from power contact, induction, or ground potential rise of sufficiently high value and duration to operate the protectors), thereby eliminating a possible fire hazard. A fuse cable will usually fuse open before the time-current rating of coarser gauge underground cable pairs is exceeded, and it permits maintaining complements of exposed and unexposed pairs in the same cable (Fig. 2). Fuse cable cannot be depended upon to prevent damage. ***Fuse cable does not protect a connecting cable from lightning exposure because the operating (time-current) characteristics of fuse cable or a fuse link of any type are such that lightning surges will usually pass through the fuse without operating it.*** Section 876-101-100 should be used for comparisons of the time-current characteristics of cable, wire, station fuses, and operated protectors. The graphical data presented in that section shows that cable and wire pairs ordinarily used will fuse open ***before*** the time-current limit of an operated protector is exceeded, thereby eliminating a possible fire hazard at the customer premises as well as at the office main frame. Accordingly, the location of fusible links and the placement of station protectors must be such that, if a pair is fused open, any hazardous potential remaining on the energized section of the telephone circuit will not endanger the customer or customer premises.

Exposed Cable Pairs

3.13 All pairs in aerial or block cable exposed to power or lightning are classified as exposed, regardless of whether or not they appear at terminals. These exposed pairs must be protected, however, only when they are in use (for example, in a ready-access terminal). Pairs in underground (unexposed) cable that connect to pairs in exposed cable are considered exposed (Fig. 1 and 2). Protection of the junction of aerial cable exposed to lightning with unexposed underground cable is discussed in Section 876-400-100.

G. Examples of Exposed Pairs

3.14 The following examples of cable pair exposures are typical of situations frequently encountered

GAUGE OF UG CABLE IS	GAUGE OF FUSE CABLE	GAUGE OF TIP CABLE MUST BE
19 OR 22	24	22
19 OR 22	26	24 OR 22
24	NONE	22
24	26	24
26	NONE	24 OR 22
(NOTES 1, 2, 3, 4 AND 7)		

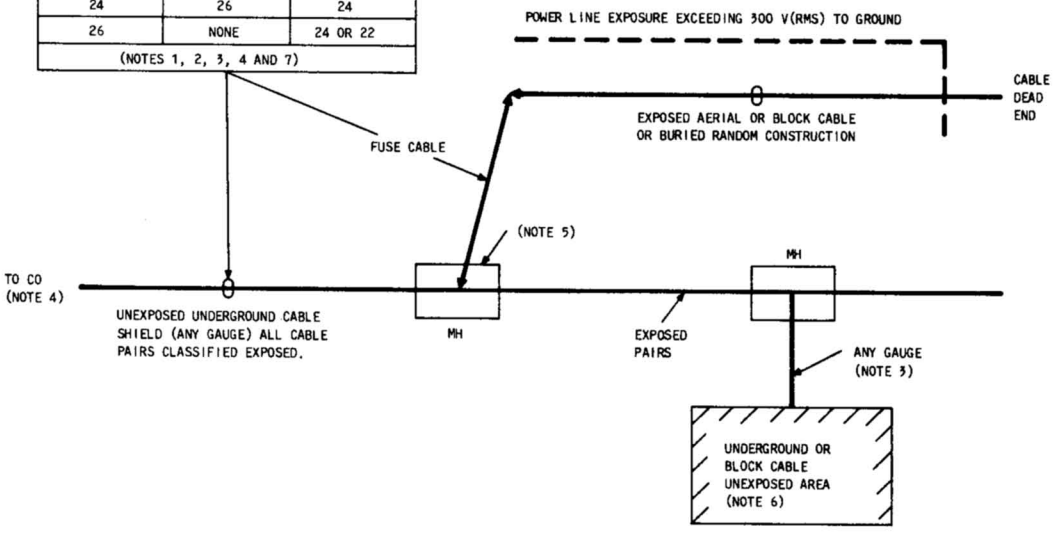

NOTES:

1. THE FUSE CABLE IN THIS CASE MAY SERVE 3 PURPOSES:
   (1) PROVIDES THE REQUIRED FUSE LINK FOR THE MAIN FRAME TERMINATING (TIP) CABLE.
   (2) ISOLATES EXPOSED AERIAL COMPLEMENT FROM UNEXPOSED UNDERGROUND COMPLEMENT.
   (3) PROVIDES REQUIRED FUSE LINK BETWEEN THE POWER EXPOSURE AND STATIONS SERVED FROM UNDERGROUND COMPLEMENT WHICH ARE MULTIPLED WITH EXPOSED PAIRS.
2. WHEN A CABLE CONTAINING BOTH VOICE PAIRS AND VIDEO PAIRS OR COAXIALS IS EXTENDED AERIALLY, ONLY THE VOICE PAIRS MUST HAVE FUSE CABLE. FOR THE PRESENT, THIS REQUIREMENT CAN BE MET BY USING SEPARATE CABLES IN THE LATERAL TO THE POLE OR STUBS IN THE MANHOLE.
3. IN ADDITION TO THE FUSE CABLE LOCATED AT AERIAL-UNDERGROUND CABLE JUNCTIONS, BUILDING OR BLOCK CABLE MAY ALSO REQUIRE A SPECIFIC COMBINATION OF CONDUCTOR GAUGES TO ELIMINATE A POSSIBLE FIRE HAZARD WHERE READY-ACCESS TERMINALS ARE USED (SEE SECTION 638-205-015).
4. ALL PAIRS REQUIRE PROTECTION AT THE CO. THE GAUGE OF THE CO TIP CABLE MUST BE AT LEAST TWO GAUGE SIZES LARGER THAN ANY FINE-GAUGE CONDUCTORS USED AS FUSE CABLE.
5. FOR LIGHTNING PROTECTION CONSIDERATION REFER TO SECTION 876-400-100.
6. STATION PROTECTION IS REQUIRED BECAUSE PAIRS ARE MULTIPLED WITH EXPOSED CABLE CONDUCTORS.
7. FUSE CABLE DOES NOT PROVIDE LIGHTNING PROTECTION.

Fig. 1—Underground Cable Containing Only Exposed Pairs

in the field or in the design of subscriber plant. The examples may be used as a guide in determining the exposure status of cable pairs or the requirements for station protection.

(a) Where underground cables contain both exposed and unexposed pairs (Fig. 2), two approaches are available for determining protection requirements.

(1) If most of the cable pairs are exposed, all pairs should be classified as exposed. Protection at the station and at the central office will then be required on all pairs, and either 26- or 24-gauge conductors will be used to coordinate with fuseless station protectors and the central office tip cable (Fig. 1).

(2) If both an exposed and an unexposed status are maintained for cable pairs, the

GAUGE OF UG CABLE IS	GAUGE OF FUSE CABLE	GAUGE OF TIP CABLE MUST BE
19 OR 22	24	22
19 OR 22	26	24 OR 22
24	NONE	22
24	26	24
26	NONE	24 OR 22
NOTES 1, 2, AND 4		

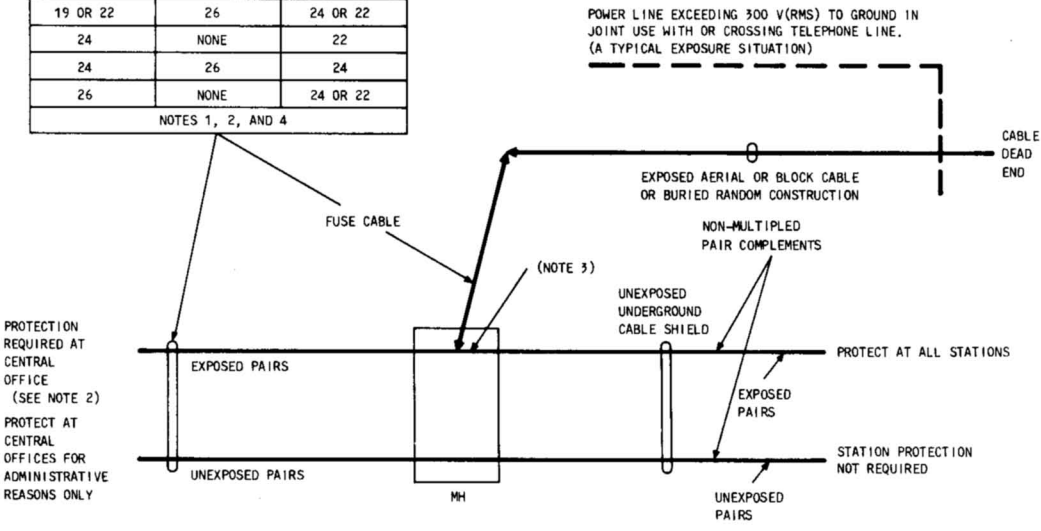

NOTES:
1. THE FUSE CABLE IN THIS CASE MAY SERVE 3 PURPOSES:
   (1) PROVIDES THE REQUIRED FUSE LINK FOR THE MAIN FRAME TERMINATING (TIP) CABLE.
   (2) ISOLATES EXPOSED AERIAL COMPLEMENT FROM UNEXPOSED UNDERGROUND COMPLEMENT.
   (3) PROVIDES REQUIRED FUSE LINK BETWEEN THE POWER EXPOSURE AND STATIONS SERVED FROM UNDERGROUND COMPLEMENT WHICH ARE MULTIPLED WITH EXPOSED PAIRS.
2. THE GAUGE OF THE CO TIP OR TERMINATING CABLE MUST BE AT LEAST TWO GAUGE SIZES LARGER THAN ANY FINE-GAUGE CONDUCTORS USED AS FUSE CABLE.
3. FOR LIGHTNING PROTECTION CONSIDERATION REFER TO SECTION 876-400-100.
4. FUSE CABLE DOES NOT PROVIDE LIGHTNING PROTECTION.

Fig. 2—Underground Cable Containing Exposed and Unexposed Pairs

fuse cable at the aerial-underground junction must conform to the requirements specified in Fig. 2. When these requirements are met, the status of the unexposed pairs remains unchanged and station protection will not be required on these pairs. However, central office protection should be placed on all pairs in the cable for administrative reasons, eg, to eliminate the need for maintaining precise records of the exposure status of each pair. The combination of conductor gauges prescribed in Fig. 2 provides the best protection for exposed and unexposed pairs that can be obtained with cables now available. These requirements should be applied in all new work and, where practical, to rearrangements and changes in existing plant. Twenty-eight gauge conductors would provide better protection for 26-gauge underground facilities than would 26-gauge fuse cable; however, the use of 28-gauge conductors is not feasible at present.

(b) Where an underground primary power circuit is brought to a distribution transformer mounted on a pole in an unexposed block area, the exposure status of the area is not changed, providing that the following conditions are met:

(1) The primary power wires are arranged so that contact with telephone plant is unlikely.

(2) The primary power wires are not extended aerially from the transformer.

(c) Unexposed cable pairs terminating in unexposed areas become indirectly exposed by extending (multipling) these same pairs into an exposed area, even though fuse cable is used at the aerial-underground junction, as shown in Fig. 3.

(d) The multipling of unexposed (underground) cable pairs with exposed (aerial) cable pairs through cross-connecting facilities at the junction of underground and exposed aerial cable should be avoided. Administrative measures should prohibit the bridging of underground cable pairs that feed exposed stations with pairs serving unexposed stations; these measures should also ensure prompt removal of bridle wires on nonworking circuits at the cross connection terminal.

(e) Where both exposed and unexposed pairs appear at a terminal in an unexposed area, an indirect exposure is created. ***All pairs*** appearing in such terminals are regarded as exposed and require station protection as indicated in Area B of Fig. 4. (The otherwise unexposed pairs require protection for administrative reasons only.) With this arrangement, adequate protection is ensured for all stations without establishing complicated rules to avoid the transfer of an unprotected station to an exposed cable pair.

(f) The unexposed pairs referred to in (e) are shown in Area A of Fig. 4. These pairs do not require protection.

(g) The use of a common shield for both exposed and unexposed pairs at non-electronic station equipment should, if possible, be avoided since all pairs must be considered as exposed and will require protection as indicated in Fig. 5. Where the exposed and unexposed pairs are in separate cables, only the exposed pairs need to be protected. This protection should be arranged so that it cannot be bypassed or eliminated if cross-connections are run between exposed and unexposed pairs.

(h) When customer premises electronic equipment (electronic station equipment) serves any mix of exposed and unexposed pairs (whether or not in same shield) protection should be applied on all pairs. All talking and signaling pairs (station lines, console cables, data lines, etc) associated with customer premises electronic equipment (electronic station equipment) that leaves the building in exposed plant must be protected at both ends. This protection should include fuse links, carbon blocks, and sneak fuses as applicable.

H. Exposed Drops from Unexposed Cable

3.15 When drop wire is run from an unexposed terminal into an exposed area (Fig. 6), the cable pairs need not be considered as exposed if (a) a protector is installed at the distribution terminal, and (b) if the cable shield is effectively grounded.

3.16 With the protection arrangement shown in Fig. 6, all pairs in the cable (including those serving the exposed drop wire) can be classified as unexposed. ***The effectiveness of the protection depends on having the cable shield electrically continuous to ground.*** Before protection is installed, a check should be made for insulating joints and cross-connecting terminals to ensure that there are no shield interruptions. If insulating joints are required for corrosion reasons, they must be bridged with a KS-14595, List 1 or 2 capacitor, or equivalent, to provide a path to ground.

3.17 Where exposed off-premises extensions are served from unexposed cable, protection as shown in Fig. 6 should be installed at the location where the exposed drop enters the building. The protector ground wire should be connected to a water pipe or to a grounding electrode of the power service. If these grounds are unavailable near the protector location, the house cable shield may be used as a ground, provided that the shield can be connected to a water pipe or power ground electrode within the building. [For protection of off premises extensions served by electronic station equipment, refer to paragraph 3.14(h) and Fig. 15.]

4. PROTECTORS FOR EXPOSED STATIONS AND PBXs

A. General

4.01 Protectors used at exposed stations are described in detail in Division 460. Information pertaining to the electrical characteristics of station protectors is contained in Section 876-101-100.

4.02 There are two general types of station protectors: "fused" (equipped with two

GAUGE OF UG CABLE IS	GAUGE OF FUSE CABLE	GAUGE OF TIP CABLE MUST BE
19 OR 22	24	22
19 OR 22	26	24 OR 22
24	NONE	22
24	26	24
26	NONE	24 OR 22
(NOTES 1, 2 AND 5)		

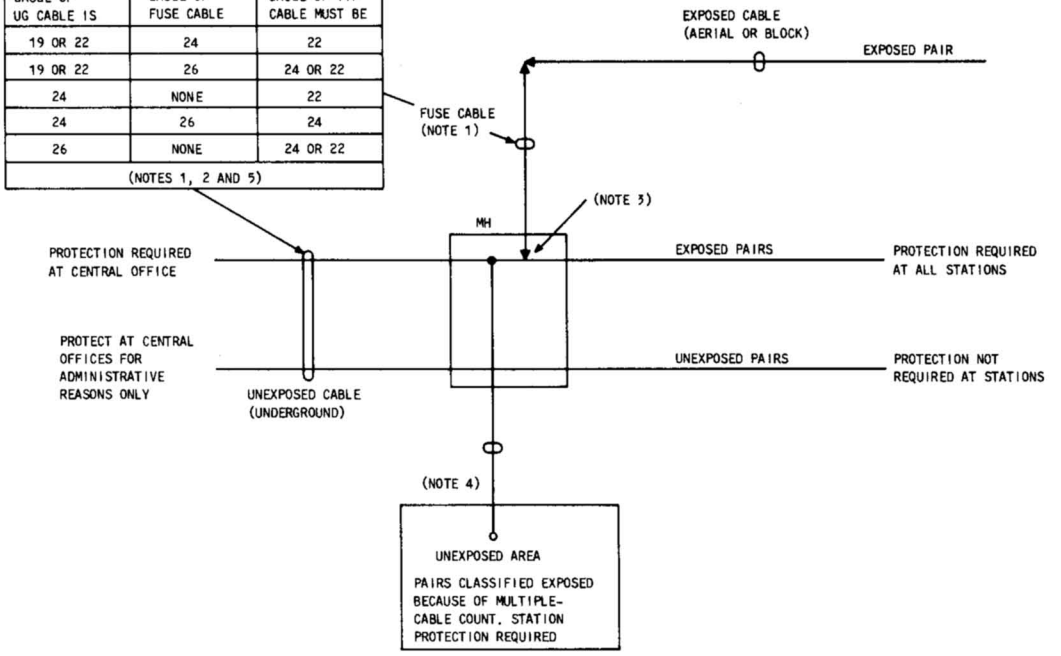

NOTES:
1. THE FUSE CABLE IN THIS CASE MAY SERVE 3 PURPOSES:
   (1) PROVIDES THE REQUIRED FUSE LINK FOR THE MAIN FRAME TERMINATING (TIP) CABLE.
   (2) ISOLATES EXPOSED AERIAL COMPLEMENT FROM UNEXPOSED UNDERGROUND COMPLEMENT.
   (3) PROVIDES REQUIRED FUSE LINK BETWEEN THE POWER EXPOSURE AND STATIONS SERVED FROM UNDERGROUND COMPLEMENT WHICH ARE MULTIPLED WITH EXPOSED PAIRS.
2. THE GAUGE OF THE CENTRAL OFFICE TIP OR TERMINATING CABLE MUST BE AT LEAST TWO SIZES LARGER THAN ANY FINE-GAUGE CONDUCTORS USED AS FUSE CABLE.
3. FOR LIGHTNING PROTECTION CONSIDERATION REFER TO 876-400-100.
4. UNEXPOSED UNDERGROUND OR BLOCK CABLE, ANY GAUGE, EXCEPT WHERE READY-ACCESS TERMINALS ARE USED. SEE SECTION 638-205-015 FOR SPECIFIC COMBINATION OF GAUGES.
5. FUSE CABLE DOES NOT PROVIDE LIGHTNING PROTECTION.

Fig. 3—Indirectly Exposed Cable Pairs

7-ampere fuses) and "fuseless." Fuseless protectors are available in single-pair and multiple-pair units for use at indoor and outdoor locations. All station protectors are equipped with voltage limiting devices such as carbon block assemblies having 3-mil gaps or gas tubes. On circuits with ground-start exposed to power serving PBXs (except battery feeders), and circuits which are likely to be exposed in the future (paragraph 3.02), 60-type sneak current fuses or heat coils are required in addition to the regular station protection. Sneak current protection is also used on certain special services and leased lines when required by local company practices.

B. Fuseless Protectors

4.03 The fuseless protector has a much higher current-carrying capacity than a fused protector. In conjunction with the use of fuseless protectors where power exposure exists, a fusible element or link between exposed plant and the protector is necessary to minimize any fire or shock

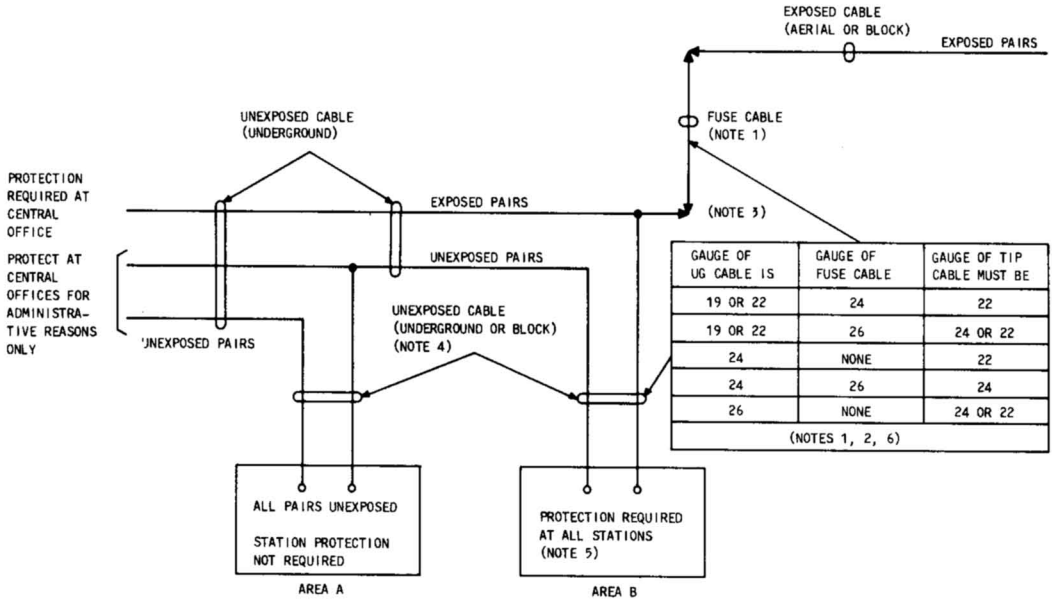

GAUGE OF UG CABLE IS	GAUGE OF FUSE CABLE	GAUGE OF TIP CABLE MUST BE
19 OR 22	24	22
19 OR 22	26	24 OR 22
24	NONE	22
24	26	24
26	NONE	24 OR 22
(NOTES 1, 2, 6)		

NOTES:
1. THE FUSE CABLE IN THIS CASE MAY SERVE 3 PURPOSES:
   (a) PROVIDES THE REQUIRED FUSE LINK FOR THE MAIN FRAME TERMINATING (TIP) CABLE.
   (b) ISOLATES EXPOSED AERIAL COMPLEMENT FROM UNEXPOSED UNDERGROUND COMPLEMENT.
   (c) PROVIDES REQUIRED FUSE LINK BETWEEN THE POWER EXPOSURE AND STATIONS SERVED FROM UNDERGROUND COMPLEMENT WHICH ARE MULTIPLED WITH EXPOSED PAIRS.
2. THE GAUGE OF THE CO TIP OR TERMINATING CABLE MUST BE AT LEAST TWO SIZES LARGER THAN ANY FINE-GAUGE CONDUCTORS USED AS A FUSE CABLE.
3. FOR LIGHNING PROTECTION CONSIDERATION REFER TO SECTION 876-400-100.
4. AREA B: WHERE READY ACCESS TERMINALS ARE USED, SEE SECTION 638-205-015 FOR SPECIFIC COMBINATION OF GAUGES.
5. PROTECTION REQUIRED ON UNEXPOSED PAIRS FOR ADMINISTRATIVE REASONS ONLY.
6. FUSE CABLE DOES NOT PROVIDE LIGHTNING PROTECTION.

Fig. 4—Effect of Indirect Exposure on Unexposed Pairs

hazard at the station in the event of a sustained power contact. The fusible link may be the 24- or 26-gauge conductors in the cable terminal stub, such as the 26-gauge stub cable supplied with the multiple pair (134-type) station protector, the 24-gauge conductors of urban wire, or E block wire (or equivalent) bridling between drop wire and open wire or rural wire.

4.04 Because of the savings in investment and maintenance expense, fuseless protectors should be used at all stations served by grounded metal shield cable (lead, alpeth, stalpeth, etc). Isolated sections of aerial cable are considered as open wire for the purpose of station protection, unless the cable is effectively grounded to a multigrounded neutral or to an extensive water (metallic pipe) system.

4.05 Fuseless protectors must be used at stations served from buried distribution cable directly connected to exposed aerial cable, provided either cable has 24- or 26-gauge conductors so located that they will serve as a fusible link. This

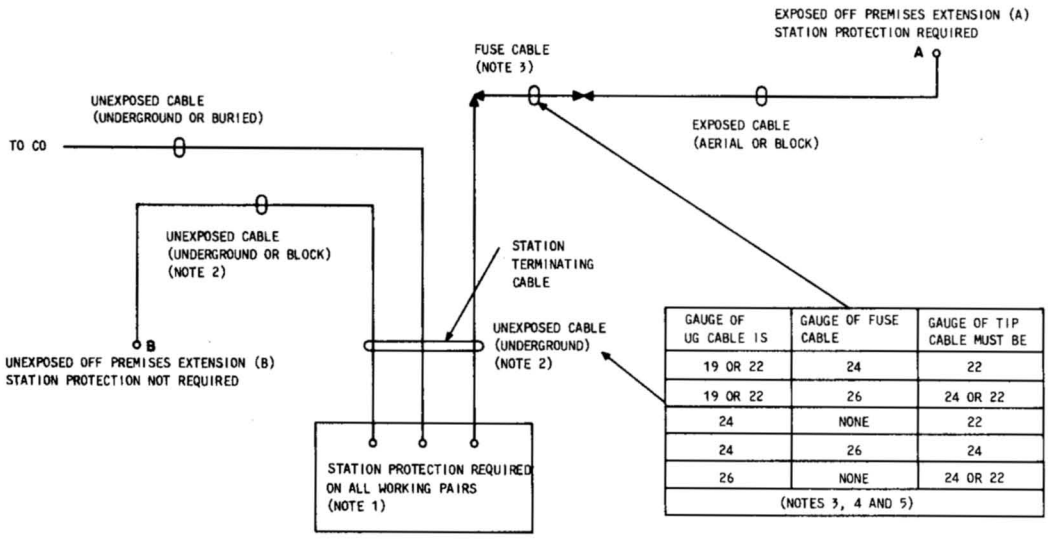

GAUGE OF UG CABLE IS	GAUGE OF FUSE CABLE	GAUGE OF TIP CABLE MUST BE
19 OR 22	24	22
19 OR 22	26	24 OR 22
24	NONE	22
24	26	24
26	NONE	24 OR 22
(NOTES 3, 4 AND 5)		

NOTES:
1. WHEN SERVING NON-ELECTRONIC STATION EQUIPMENT A SEPARATE SHIELD SHOULD BE PROVIDED FOR THE EXPOSED CABLE SO THAT ONLY EXPOSED PAIRS WILL REQUIRE PROTECTION. WHEN ELECTRONIC STATION EQUIPMENT IS SERVED BY A MIX OF EXPOSED AND UNEXPOSED PAIRS, WHETHER OR NOT THEY ARE IN SEPARATE CABLES, ALL PAIRS REQUIRE PROTECTION.
2. WHERE READY ACCESS TERMINALS OR MAIN FRAME TIP CABLES ARE USED, SEE SECTION 638-205-015 FOR SPECIFIC COMBINATION OF GAUGES.
3. THE FUSE CABLE IN THIS CASE PROTECTS STATION TERMINATING CABLE OR MAIN FRAME CABLE AND OFF PREMISES EXTENSION (B), BUT DOES NOT PROTECT OFF PREMISES EXTENSION (A) STATION PROTECTORS SERVED BY THE EXPOSED COMPLEMENTS SINCE THE FUSE CABLE IS NOT BETWEEN THE STATION AND THE EXPOSURE. THEREFORE AN ADDITIONAL FUSE LINK IS REQUIRED BETWEEN POWER EXPOSURE AND STATION (A).
4. THE GAUGE OF THE TIP OR TERMINATING CABLE MUST BE AT LEAST TWO SIZES LARGER THAN ANY FINE-GAUGE CONDUCTORS USED AS FUSE CABLE.
5. FUSE CABLE DOES NOT PROVIDE LIGHTNING PROTECTION.

Fig. 5—Indirect Exposure at Stations

requirement can be met if the fine-gauge conductors are located at one of the following points:

(a) In the aerial or buried cable at the junction pole (see note)

(b) In the buried cable section between the first pedestal terminal and the aerial junction (see note)

(c) In the connecting block wiring at the pedestal terminal.

Note: A minimum of 2 feet (not including connections) of fine-gauge (24- or 26-gauge) cable is satisfactory for protection reasons.

4.06 Only 24- or 26-gauge copper distribution cable (or equivalent) should be used in random separation construction with buried distribution closures. This permits the use of fuseless station protectors. (Fuse links cannot be constructed in a buried splice, however fuse links are present when buried service wire is connected at a pedestal.) The recommendation to use 24- or 26-gauge distribution cable is made with the view of simplifying administrative procedures and ensuring proper coordination of fusing requirements. As an alternative to specifying 24- or 26-gauge distribution cable, fuse type station protectors may be used with any gauge distribtuion cable.

4.07 Fuseless protectors may also be used at all stations served by open wire, multiple line

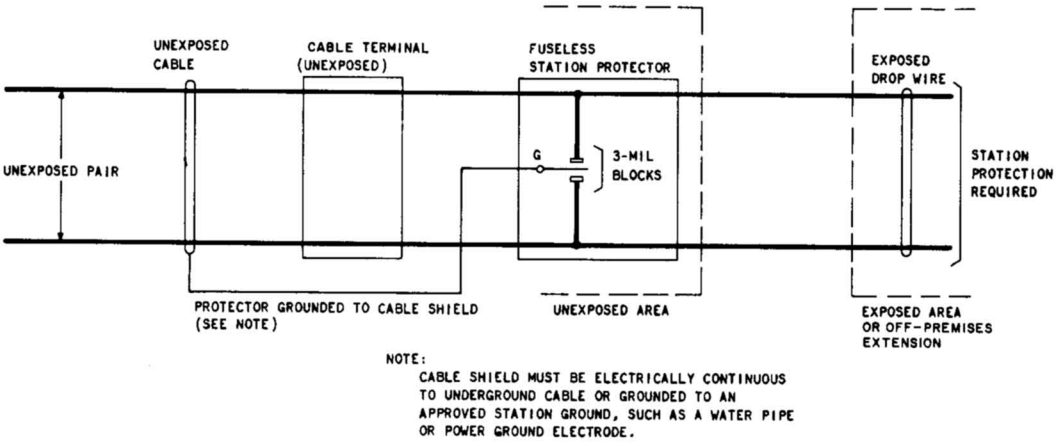

Fig. 6—Exposed Drop From Unexposed Cable

wire (19 through 24 AWG), or C rural wire (single pair, 14 AWG) subject to the following conditions:

(a) The protector must be grounded to a metallic water pipe (buried for at least ten feet) or to the ground electrode (rod) or grounding conductor of a multigrounded neutral power system. Where a unigrounded power system is involved, bond to an acceptable grounded secondary neutral. A grounded secondary neutral acceptable for bonding is one which serves a minimum of three customers with the power service grounded on the premises.

(b) The bridling between the service drop wire and open wire or multiple rural wire or C rural wire must consist of at least 2 feet of E block wire (0.027-inch diameter) fusible link (or equivalent), installed as described in Section 462-240-200. (See Table A for acceptable combinations.)

(c) The service loop must consist of either a single-pair drop wire or F multiple drop 22-gauge. ***Older types of multiple drop wire (0.027-inch diameter) or block wire must not be used because this wire cannot be protected against fusing on the premises (available fuse-link E block wire has approximately the same fusing characteristics as the multiple drop wire and will not provide proper fusing coordination).***

TABLE A

PLANT	DROP	E BLOCK BRIDLE FUSE REQUIRED
Open Wire	1 pr. or F mult.	Yes
19 AWG Rural	1 pr. or F mult.	Yes
22 AWG Rural	1 pr.	No
22 AWG Rural	F mult.	Yes
24 AWG Urban	1 pr. or F mult.	No
C Rural	1 pr.	Yes

C. Fuse-Type Protectors

4.08 If the grounding or bridling requirements in paragraph 4.07 cannot be met, a protector with fuses must be used.

4.09 A fuse-type protector is required when it is necessary to run more than one drop or block wire for battery supply.

D. Protected Terminals

4.10 With fuseless protected building terminals, it is necessary to have a short length of 24- or 26-gauge protective cable between exposed plant and the terminal to prevent dangerous overheating of protectors and possible fire hazard within the

terminal enclosure as a result of a power contact with exposed cable. In NH cable terminals or 1A4A terminal blocks, the 24-gauge stub cable serves as a fusible link. The 134-type protector is also equipped with a stub cable (26-gauge) that serves as a fusible link. Conductor fusing is, therefore, confined within the sheath and reduces the potential fire hazard. Ready-access terminals, however, present a special problem because the PIC cable conductors, terminated on connecting blocks, cannot serve as fusible links without creating the danger of fire within the enclosure. For example, if an exposed cable is 24-gauge and if 24-gauge PIC cable is extended to a ready-access terminal in the building, it is likely that conductor fusing will occur at or near the terminal posts of the protector. This tendency to fuse where the conductors are separated, rather than under the sheath, is because conductors within a cable sheath are closely packed and pairs adjacent to the wires carrying current help to dissipate the heat. To eliminate a possible fire hazard, the PIC cable terminating on the protectors must be at least two gauges (AWG) larger than the fuse cable. Where a ready-access terminal is installed on the exterior of a noncombustible wall or in a fire-resistant enclosure on the exterior of a combustible wall, 24- or 26-gauge PIC cable in the terminal may serve as the fusible link. Specific applications of fine-gauge protective cable to provide safe fusing arrangements for ready-access terminal installations are described in Section 638-205-015.

E. PBX Protection—General

4.11 Protection requirements for exposed lines serving PBX equipment, and for some off-premises lines, may be different from those of a station served from a central office. (Off-premises lines originate at the PBX and are usually exposed, ie, PBX lines serving stations remotely located from the PBX.) Protection requirements are similar in that a protector (spark gap and fusing as applicable) is required on all exposed lines terminated in a PBX, lines served by a PBX, or stations served from a central office. This requirement applies to both electromechanical and electronic PBXs.

4.12 Where only a few exposed Central Office trunks serve a PBX, fuseless station protectors can be used in accordance with the provisions of paragraphs 4.04 through 4.07. Where two or more drop wires are used for battery-feed purposes, fuse-type protectors are recommended (instead of fuseless protectors) to simplify the special wiring methods necessary for limiting current drain through one protector mounting.

4.13 Where exposed cable pairs are extended into buildings, 134-type protectors with 26-gauge conductors in the terminal stub cable are often used for PBX protection. With this or similar type protectors, 60-type fuses must be installed on each line conductor exposed to power as described in paragraph 4.02. Mounting arrangements and hardware for 60-type sneak fuses with fuseless type protector mounts are described in Section 460-100-400. It should be recognized that stub fuse links or station fuses are ***not*** substitutes for sneak fuses where sneak fuses are required (paragraph 4.14). Sneak fuses can be operated on low magnitude currents that will not affect stub fuse links or station fuses. ***Sneak fuses do not provide lightning protection.*** When main frame type equipment that is not listed by Underwriters Laboratories (such as the 302- or 303-type connectors) is used in subscriber buildings, it must be mounted in a dedicated, enclosed space exclusively for telephone communications equipment (main frame room) and under control of the telephone company. The application of 302- or 303-type connectors equipped with 4A protectors with heat coils is described in Section 636-320-100 and 636-330-100, respectively.

4.14 As stated in paragraph 4.13, electromechanical and electronic-type PBX circuits require additional protection in the form of sneak fuses (60-type) or heat coils. These devices must be provided for central office trunks, tie trunks, off-premises extensions, and ringing feeders or any other circuits exposed to power (paragraph 3.02) that have a low impedance path to ground (see applicable practices for sneak fuse requirements, eg, 460-100-400).

F. Customer Premises Electronic Equipment Protection

4.15 Electronic-type station equipment installations must meet definite lightning protection and grounding requirements. Most of these requirements are in addition to the general requirements described above and are further discussed below. It is recommended that SDs and BSPs for a particular type of Electronic Station Equipment be reviewed for requirements peculiar to that equipment.

4.16 ***The building entrance facility protector must always be connected to an approved ground via the shortest and straightest practical route (see Section 631-400-102).*** Figures 7 through 14 illustrate methods for selecting an approved protector ground.

4.17 A Single Point Ground (SPG) terminal is provided on electronic station equipment. It is the only acceptable point for connection from the equipment to the external protection grounding system. The Single Point Ground terminal is designated differently for various types of electronic station equipment; refer to applicable BSPs and SDs. For example, the PBX Single Point Ground terminal for the DIMENSION® has been called the "Wall Mounted Ground Window." The PBX Single Point Ground terminal for the 800/801 systems is called the "T&B" (Thomas and Betts) lug. The Single Point Ground terminal for key systems is called the power supply output circuit ground (local ground).

Electronic PBX Protection

4.18 The PBX Single Point Ground terminal must always be connected to the ***closest*** approved ground or closest approved floor ground in a high-rise building. Approved ground can be determined by using the guidelines in paragraph 7.07 and approved floor ground determined by the guidelines in paragraph 9.08.

4.19 The PBX Single Point Ground terminal must ***also*** be connected to the ground lug located on the building entrance facility protector (carbon block or approved gas tube) with a coupled bonding conductor. The reason for bonding the PBX Single Point Ground terminal to the protector ground lug, with a conductor closely coupled to the pairs feeding the PBX, is to minimize potential differences between the PBX pairs associated with the building entrance protector ground and the local ground associated with the sensitive electronic circuitry. The mutual impedance of this coupled bonding conductor to the pairs feeding the PBX causes transformer action similar in effect to that obtained when a neutralizing transformer is used. The following options exist for the coupled bonding conductor between the PBX Single Point Ground terminal and the ground lug on the protector:

(a) If the installation conforms to the definition of a high-rise or low-wide building stated in Part 9, then the PBX Single Point Ground terminal is connected to the coupled bonding conductor which has been provided in accordance with Part 9. The construction described in Part 9 assures a connection to the protector ground lug.

(b) If the installation does not conform to the definitions of a high-rise building as stated in Part 9, then the coupled bonding conductor can be obtained via:

(1) A wire tie-wrapped to the cabling between the protector and PBX;

(2) Spare pairs in the cabling between the protector and PBX;

(3) The shield of the cable between the protector and PBX, providing the cable has a continuous metallic shield.

The BSPs describing PBX equipment specify gauge of this coupled bonding conductor and the number of spare pairs required. Typical values for the bond connection are 10-gauge copper for (1) above, or a minimum of 6 spare pairs of 24 gauge inside wiring cable for (2) above. If option (3) is employed, it is imperative to maintain shield continuity as well as verify that construction of bonds has been completed with acceptable permanent hardware and ***not*** with temporary hardware such as two B Bond clips with a single 14-gauge appliance wire. If this continuity cannot be assured, then one of the other options must be employed. If the option of 6 spare pairs is used to provide the bond as specified in (2), then at every point where these pairs are connected, cross-connected or accessible, Form-3013B must be used to tag and identify these pairs as grounding conductors for the PBX. Splices in bonding or grounding conductors reduce reliability and must be avoided.

4.20 Electronic PBX systems are vulnerable to surges entering the telephone cable plant, associated AC power facilities, and lightning strikes to the building housing the PBX. (Refer to paragraphs 3.02, 3.08, 3.09, 3.14 and Part 9 for appropriate guidelines.) Care must be taken to ensure that all talking and signaling pairs associated with electronic PBX systems that leave the building housing the PBX in exposed facilities are protected at both ends. If the facilities are exposed to only

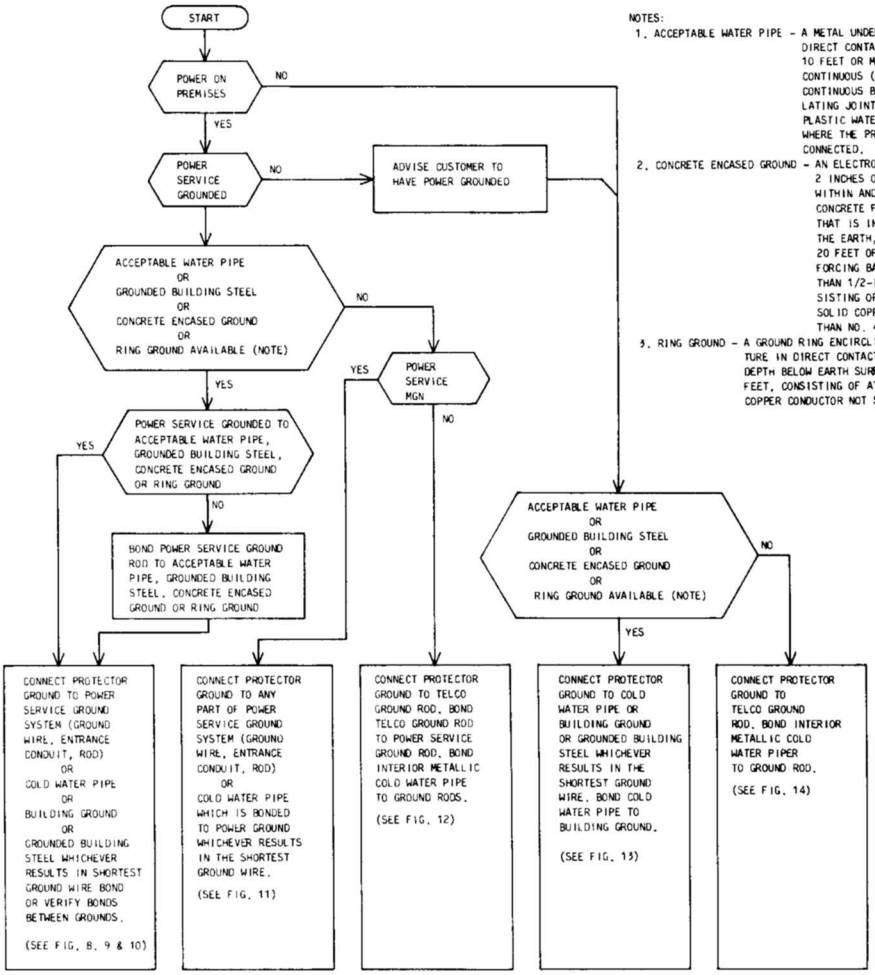

Fig. 7—Selecting an Approved Ground

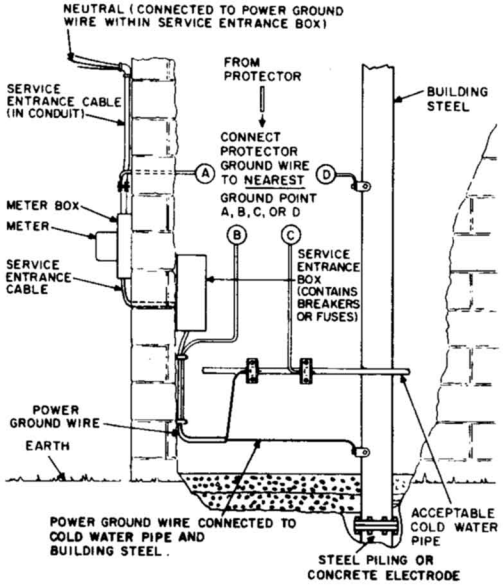

Fig. 8—Acceptable Water System or Building Ground—Power Service Grounded to Cold Water Pipe and Grounded Building Steel

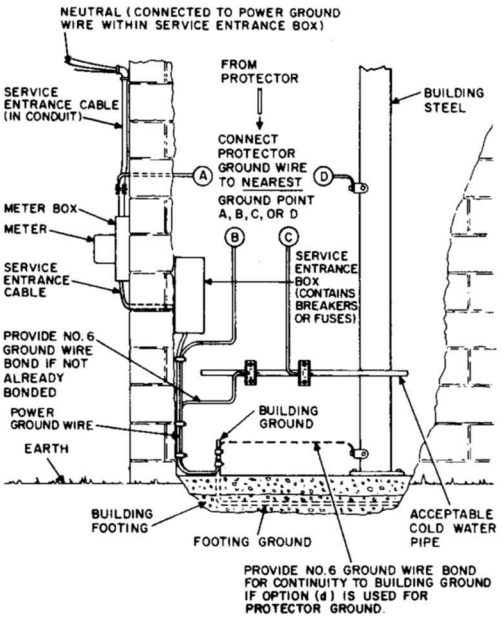

Fig. 9—Acceptable Water System or Building Ground—Power Service Grounded to Building Footing Ground

lightning, then station protectors are required at both ends. If the facilities are exposed to lightning and/or power, then station protectors, and fuse links (cable fuse) are required at both ends. Sneak current fuses are required on circuits exposed to power that have a low impedance path to ground.

4.21 All station protectors including those for trunks and off-premises extensions ***in the same building*** should have the ground terminals bonded to the PBX equipment Single Point Ground terminal and to the approved ground in accordance with the external wiring and spacing criteria shown in Fig. 15A or Fig. 15B as applicable.

4.22 If gas tube protector units other than the 11A1A, 11B1A or equivalent are used to reduce maintenance, they must be paralleled with carbon block protectors (see gas tube limitations Section 876-101-100). ***Gas tube and carbon block protectors should be installed at the same location for maximum effectiveness at reasonable cost.*** If any protectors are installed near the PBX at a separate location from and, in addition to, the building entrance facility protectors, sneak current fuses will be required in each pair between the separate protectors to guard the branch cabling against excessive current flow. The addition of sneak current fuses made necessary by separated protector locations could easily negate the maintenance cost advantages of using gas tubes.

G. Key Telephone System Protection

4.23 The grounding and special protection requirements for key telephone systems (KTS) are generally similar to those for PBXs although somewhat less complex due to the smaller size and complexity of the KTS systems. (Refer to Section 518-010-105 for a thorough coverage of the grounding and special protection requirements for KTS.)

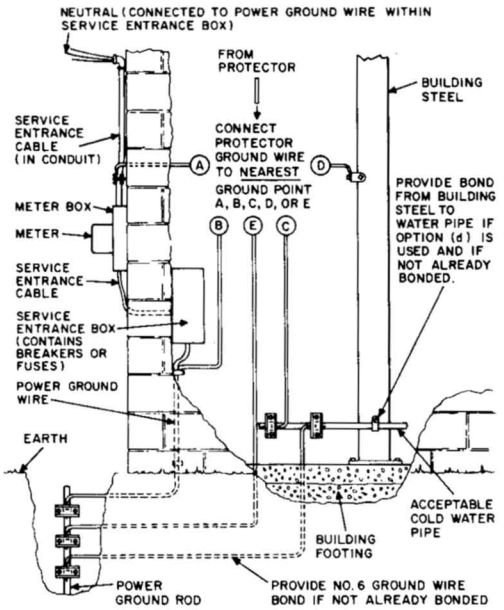

Fig. 10—Acceptable Water System—MGN Power Service Grounded to Ground Rod

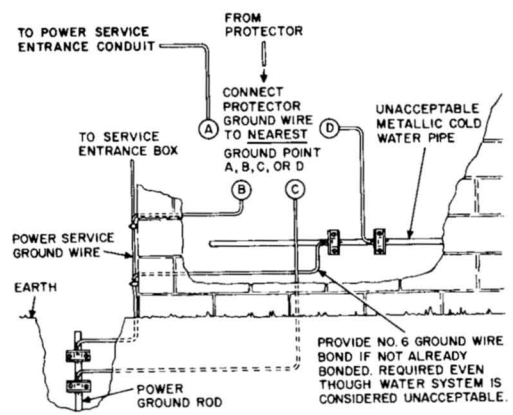

Fig. 11—Acceptable Water System or Building Ground not Available—MGN Power Service Grounded to Ground Rod

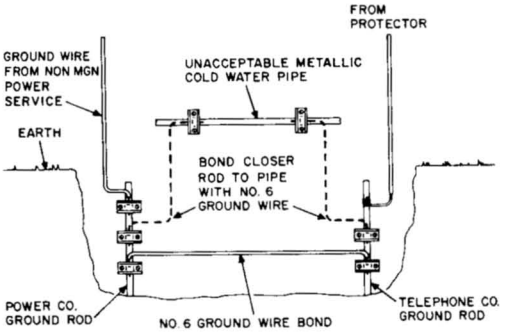

Fig. 12—Acceptable Water System or Building Ground not Available—Non-MGN Power Service Grounded to Ground Rod

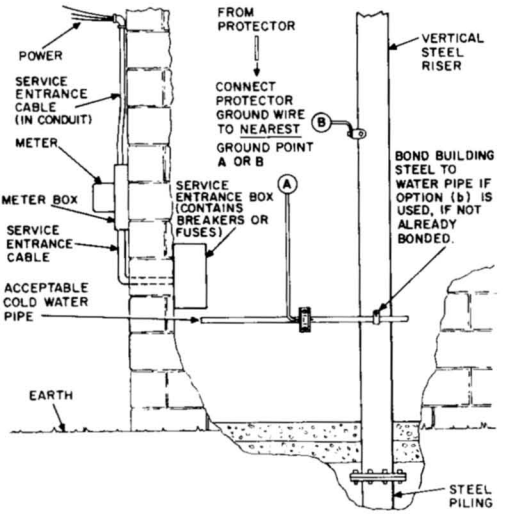

Fig. 13—Acceptable Water System or Building Ground—Power Service not Grounded or No Power on Premises

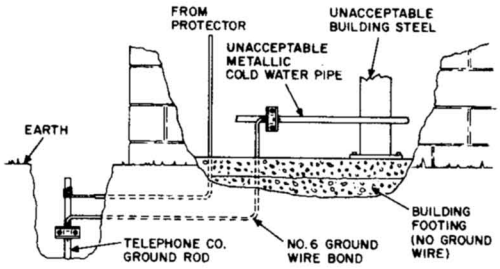

Fig. 14—Acceptable Water System or Building Ground not Available—Power Service not Grounded or No Power on Premises

4.24 Key telephone power supplies are presently designed in such a manner as to only require a coupled bonding conductor from the power supply Single Point Ground terminal to the station protector ground lug. This bond, when provided in accordance with this section, satisfies all necessary and sufficient ground connections for KTSs and an additional connection to a nearby approved ground (as is required for PBX systems) shall not be made. If a key telephone installation conforms to the definition of a high-rise or low-wide building as stated in Part 9, then the coupled bonding conductor to the protector can be provided using the same guidelines outlined in paragraph 4.19(a) for PBX systems. If a key telephone installation does not conform to the definition of a high-rise or low-wide building, then the guidelines outlined in Section 518-010-105 for providing this coupled bonding conductor should be followed.

4.25 The following additional recommendations for the KTSs are made:

(a) Where remote stations are connected to the KTSs via exposed facilities, then protection is required on both ends of the facility. This protection may consist of station protectors at both ends if facilities are only exposed to lightning, or fuse links (cable fuse) and station protectors if facilities are exposed to lightning and/or power. The KTSs do not presently require sneak current protection since the equipment does not contain a low impedance path to ground.

(b) When more than one station protector is used to serve a single KTS, then the requirements for bonding can be obtained using the same criteria outlined in paragraph 4.21 (Fig. 15) for PBX systems. As stated before, no connection from the key telephone power supply Single Point Ground terminal to a nearby approved ground should be made.

(c) If gas tube protectors other than the 11A1A, 11B1A, or equivalent, or if any protectors are used at the KTS in addition to and at a separate location from the building entrance protector, then the recommendations in paragraph 4.22 must be followed, ***including*** the use of sneak current fuses.

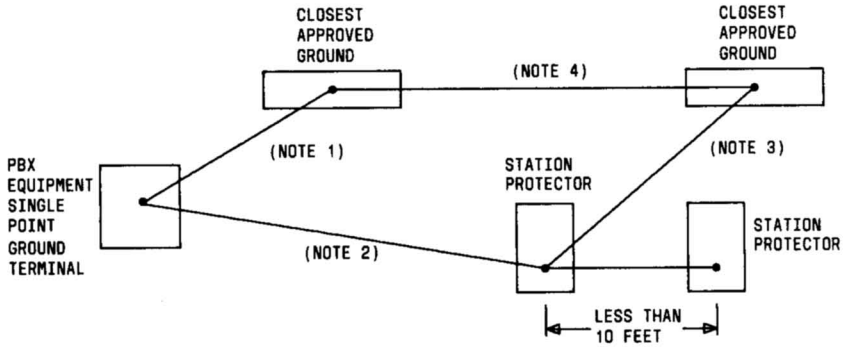

A

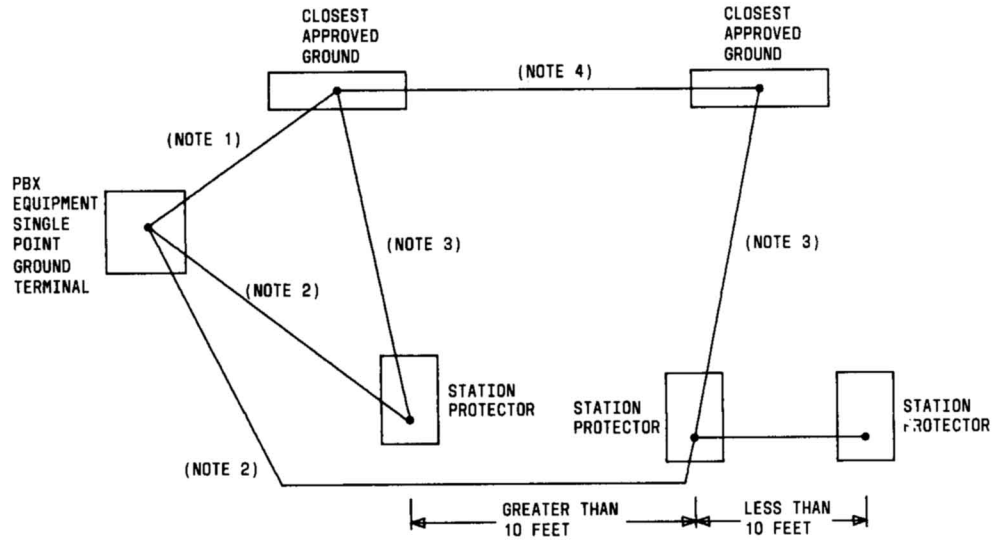

B

NOTES:
1. SEE PARAGRAPH 4.18 (KEY TELEPHONE SYSTEMS SHOULD NOT HAVE THIS CONNECTION)
2. SEE PARAGRAPH 4.19
3. SEE PARAGRAPH 4.17
4. ALL APPROVED BUILDING GROUNDS ARE OR MUST BE COMMON BONDED
5. SOME ELECTRONIC PBX SYSTEMS SUCH AS THE 201S (DIMENSION) REQUIRE ADDITIONAL CONNECTION TO SINGLE POINT GROUND. REFER TO APPLICABLE SDs AND BSPS

Fig. 15—PBX External Wiring for Protection Grounding and Bonding

5. LOCATION OF PROTECTORS

A. General

5.01 Detailed instructions relating to the installation of protectors at both indoor and outdoor locations are contained in Division 460. Some general considerations involved in selecting protector locations are outlined in the following paragraphs.

B. Indoor Stations

5.02 Where protectors are placed inside a building, it is desirable to select a location accessible for maintenance as near as possible to the point where the power service enters the building. Also, protectors should be located with the idea of limiting the length of line conductor and ground wire within the premises. With fuseless protectors, the line conductors remain grounded for the duration of a power contact and the voltage on the wire cannot rise sufficiently to create a hazard. To ensure this safety feature, the length of ground wire from the protector should be as short as possible in order to provide a low-impedance path to ground. Protectors such as the 123- and 128-types can be mounted directly on a water pipe by means of a 72A or 90A bracket, respectively. Minimizing the length of bond wire from the protector to the power ground is also important. Protectors should be located to minimize the length of ground wires and bonds to the power grounds.

5.03 In selecting a location for fused protectors, a compromise between length of ground wire and length of drop conductors may be necessary. In such cases, it is preferable to have the conductors on the line side of the protector as short as possible. This is recommended because the line conductors are likely to remain energized for some time after the fuses operate.

C. Outdoor Stations

5.04 In general, outdoor stations served by exposed conductors require standard station protection with the ground connected as specified in Section 460-100-400. Figure 16 shows that carbon block protectors should be used for many stations (particularly coin telephones) that have in the past been treated as unexposed. For example, protectors are necessary because of lightning exposure of the serving buried or underground plant erroneously thought to be unexposed to lightning, or lightning exposure of aerial power facilities serving the station or booth. The warning in paragraph 3.09 describes the latter situation. (Refer to Section 506-410-400 for treatment of single-slot coin telephones under exposure conditions.) However, some outdoor stations require special grounding arrangements to prevent a possible shock hazard to persons using the telephone. These stations are as follows:

(a) ***Public Telephones:*** Metallic outdoor station assemblies, such as booths and drive-up or walk-up telephones that have a power supply for lighting, should be grounded as instructed in Section 508-100-100. At these stations, the telephone set housing and booth structure must be connected to the electric service ground to prevent exposed metal parts from becoming accidentally energized by a short circuit in the internal power wiring. Grounding the station assembly to the power ground ensures operation of the branch circuit fuse, thereby preventing a possible shock hazard. Common grounding of power and telephone protection is automatically provided when the station protector ground is connected to the housing assembly of the subscriber set or to the booth structure.

(b) ***Stations on Wood Poles:*** Where a station served by exposed conductors is to

be installed on a wood pole, a location having the best available ground for the protector should be selected. The most desirable location is a pole that has an existing vertical ground wire connected to a multigrounded neutral conductor and a driven ground electrode. The vertical ground wire should be used for grounding the station protector. Where a vertical run of ground wire is to be established, telephone company personnel may drive the ground rod and run the wire to the top of the telephone space. At this point, the wire should be bonded to the cable strand and left in a coil of sufficient length for the power company to extend to the neutral conductor. ***A station should not be placed on a pole having a power vertical ground wire for lightning protection unless the ground wire is connected to a multigrounded neutral conductor.*** The reason for this precaution is to avoid the effects of a rise in voltage-to-ground resulting from the operation of lightning protection devices on the power system. This condition might present a shock hazard or interrupt telephone service by grounding the station protector. If an acceptable grounding medium (such as a multigrounded neutral) is not available, the protector should be grounded to a station ground rod placed about 2 feet from the base of the pole, provided that the station is served from cable. Where the station is served from wire plant (open, rural, urban), the ground rod should be supplemented by a ring of B ground wire placed approximately 6 inches deep and enclosing the ground area on which a telephone user would stand.

(c) ***Stations on Metal Poles:*** The use of metal poles for telephone stations should be avoided, wherever possible, because special installation and maintenance measures may be necessary, which can increase the cost of the job. More important, however, is the possibility of electric shock and damage to station equipment, which may be difficult to eliminate. To guard against such hazards, the following precautions must be observed:

(1) Where telephone conductors are unexposed and the power circuits on the metal pole are not in excess of 300 volts (rms) to ground, station protection or special precautions are not required. [The presence of power circuits on a single pole may not affect the exposure status of the telephone plant, as explained in paragraph 3.14(b).] Where exposed telephone conductors are involved, however, the station protector ground should be connected to the metal pole. This precaution must be observed in all cases, even though other means of grounding the station protector are employed. If the metal pole is bonded to a low-impedance ground (such as a water pipe) or to a multigrounded neutral or equivalent, no additional grounding of the station protector is required. If the metal pole is not effectively grounded, the protector ground should be connected to a station ground rod placed about 2 feet from the pole. The ground rod should be bonded to the pole near the ground line.

(2) Where a metal pole supports power circuits (open-wire or in conduit) of more than 300 volts (rms) to ground, the telephone station should not be installed unless the pole can be grounded to a metallic water pipe or to a multigrounded neutral. Where telephone circuits are exposed, the protector ground need only be connected to the pole, which must be bonded to a metallic water pipe or to a multiground neutral.

6. STATIONS AND PBXs REQUIRING SPECIAL PROTECTIVE MEASURES

A. General

6.01 Special protective measures are generally required for stations located in areas where abnormal electrical disturbances outside the telephone system can create a shock hazard or cause damage to telephone facilities. Station installations requiring special protection considerations are as follows:

(a) At power substations or generating stations where excessive ground potential rise may be experienced.

(b) Where privately owned communication circuits are connected to Bell System facilities and the privately owned circuits are in structural conflict or in joint use with power circuits not suitable for general joint use.

(c) Where Bell System facilities are leased for the operation of "foreign" signaling circuits that might apply excessive voltage on the system facilities.

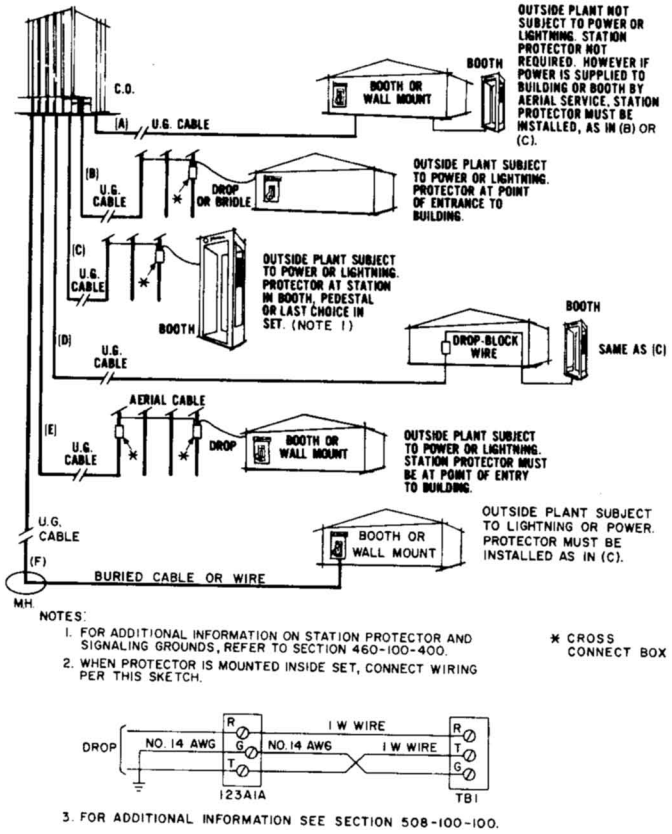

Fig. 16—Coin Telephone Protection Requirements

(d) Where customer-owned PBX, station, or terminal equipment is connected to Bell System facilities through Bell System owned interconnecting units.

6.02 The application of special environmental protective measures at power substations to protect wire-line communications facilities serving the power substation is described in Section 876-310-100. Measures applicable to the situations in paragraph 6.01(b), (c), and (d) are described in Division 876, Layer 6. Described in paragraphs 6.03 through 6.08 are other installations where it is desirable to employ special or auxiliary protection so that maintenance of station protectors may be reduced.

B. Power Substation Vicinity

6.03 Careful consideration should be given to the problems and consequences of serving subscriber premises located within the influence of a power station ground mat. For example, if a residential development or an industrial or business complex is affected, then large numbers of strategically placed protectors equipped with gas tubes may be required, particularly if grounding structures are not extensive throughout the area. When potential rise exposure magnitudes are large and when the dielectric strength of the serving facilities could be exceeded (affecting service reliability), isolating or neutralizing transformers may be required (ie, a large business with a PBX may require neutralizing transformers). Telephone cable serving a power

station should be dedicated to that purpose. Other subscribers within the influence of the same power station should be served, if possible, by a separate cable; or, as an alternative, the splice point from a common cable serving the power station and other subscribers should be made at a sufficient distance from the power station so that ground potential rise limits will coordinate with requirements of the power station communication services. Section 876-310-100 should be consulted for protective transformers, cable splicing, and grounding requirements if these exposure conditions are encountered. Section 876-400-100 describes procedures for minimizing potential differences between conductors and shield in the common use cable serving subscribers when that cable passes through the ground potential rise influence of a power station ground mat.

C. Remote Locations

6.04 Telephone stations are sometimes bridged on circuits of trunk open-wire lines and are called "toll stations." These stations and remote rural subscriber stations may serve fire warden towers, airports, etc, where continuity of service is very important. At such stations, lightning exposure may be severe, and prompt maintenance of service is often difficult because of the remoteness of the location. To improve the maintenance at these highly exposed stations, the regular carbon block station protectors may be supplemented with gas tubes.

D. Commercial Radio and Television Transmitting and Receiving Stations

6.05 In general, telephone facilities at commercial radio and television transmitting or receiving stations located in built-up areas where low-resistance grounds are available will not require special protective measures. Common grounding is essential at all stations, however, to limit differences in voltage and to reduce the effects of high-frequency induction. At locations outside of urban areas, radio and television towers are exposed to frequent lightning strokes, and special protective measures are recommended as follows:

(a) If the station is served aerially, the cable in the pole-to-building span should have polyethylene-insulated conductors. Where the entrance cable is underground or is buried, PIC cable with PASP-type sheath should be used. When the entrance cable is in metal conduit, the shield should be bonded to the conduit at the underground pole and in the building. At all stations, the shield of the entrance cable should be grounded in the building to the radio station grounding system. At the junction of the main distribution cable and the entrance cable the shield should be bonded, if necessary, to provide electrical continuity. If an insulating splice is required for corrosion reasons, a KS-14595 List 1 or 2 capacitor (or equivalent) should be bridged across the splice to maintain a path to ground. Small-diameter aerial branch cables, even though supported on strand, may not have sufficient current-carrying capacity to prevent lightning damage. To provide additional conductivity for the shield, a B ground wire should be placed parallel with the cable in the pole-to-building span. This wire should be connected to each end of the strand dead-end and to the station ground. Also, any branch cable not supported on strand, either in the aerial span or on the building, should be paralleled at these locations with a B ground wire connected between the last point of strand attachment and the station ground. Similar reinforcement of the shield should be provided for a branch cable in an underground dip or buried between the entrance pole and the station.

(b) Full-count protection should be provided at the cable terminal in the building. Precautions should be taken to ensure that protection is kept intact at all times. The protector ground wire should be connected to the feeder cable shield and to the station ground.

(c) Where drop wire is used for service to the station, 6-mil protector blocks should be provided between the cable shield and all pairs (including nonworking pairs) in the cable terminal. Standard station protection must be placed in the building, and the ground terminal of the protector should be connected to the radio or television station ground. Gas tubes such as the 6A or 6B type may also be added to reduce maintenance of carbon block protectors.

(d) In addition to the arrangements covered in items (a), (b), and (c), full-count protection with 6-mil blocks should be employed on the branch cable if the branch cable is connected to a main cable containing pulp- or paper-insulated conductors. Drop wires from terminals on the

main cable within 1000 feet of the branch cable should also be protected with 6-mil blocks. A low-resistance ground consisting of D ground rods or a counterpoise ground of 104-mil or 128-mil copper wire should be installed on the main cable near the branch cable junction. This ground should be located outside the influence of the radio station ground. However, this will not be possible when a buried parallel wire is used to increase shield conductivity, as discussed in item (a). Where exposure to lightning is usually severe, 6-mil blocks may be necessary; if maintenance is a problem, the use of gas tube protectors on all pairs in the main cable at the branch cable junction may be justified.

6.06 The purpose of full-count protection is to limit and equalize the voltage between cable shield and all conductors at protector locations. Between protector points, a conductor-to-shield voltage can develop where there are paths to ground via telephone anchor guys or arcing to power ground wires that have normal clearance to telephone plant. The magnitude of the voltage for a given shield current will depend upon the conductivity of the shield and the spacing between protectors. Under severe lightning conditions, the voltage developed in relatively short sections between protector points may be high enough to cause dielectric failure of paper- or pulp-insulated cable conductors. An excellent solution to this problem is the use of PIC cable for all new installations and for replacement purposes at radio stations.

6.07 Protection considerations for Bell System radio stations are described in Section 876-210-100.

E. Mobile Homes and Recreational Vehicles

6.08 The metallic structure of many types of mobile homes and recreational vehicles and their location (usually in suburban and rural environments) may contribute to severe lightning and power exposures. Experience has indicated the advisability of using the B voltage tester to verify that the mobile home body or chassis is not energized prior to installation work. The station protector should be placed as near the mobile home as possible. ***A separate station protector ground wire, bonded to the mobile home chassis, must be provided.*** If a mobile home has a seal that shows it is wired to meet requirements of ***ANSI*** A119.1 and ***NEC*** C1 ***AND*** if the mobile home is permanently wired using conduit (***not*** plug and cord connected) it will not be necessary to bond the mobile home chassis to ground as it is already bonded through the conduit or power ground conductor. The power service green wire must not be used as the station protector ground. The telephone station protector ground and the power ground must be commonly bonded together. The mobile home is treated as a permanent type home where telephone service is concerned in that the mobile home is usually moved into place and remains there indefinitely. Protection and grounding requirements for mobile homes is covered in Section 461-220-100. Recreational vehicles such as small camp trailers, camper trucks, motor homes, or boats are moved about often. The telephone service, protection, and grounding requirements for these vehicles differ from that of mobile homes and is covered in Section 461-220-101.

7. STATION AND PBX PROTECTOR GROUNDING

A. General

7.01 If telephone equipment and wiring are isolated from ground (earth) and from metallic or grounded structures such as gas and water pipes, heating systems, power conduit and wiring, and "foreign" communication facilities, abnormal voltages may develop on these systems as a result of power contacts or lightning disturbances. The voltage differences that may exist between the various structures must be equalized or limited by common grounding to reduce shock hazard and to prevent arcing and damage to equipment or property.

B. Effective Station Grounding Systems

7.02 Effective voltage equalization between conducting surfaces is a basic consideration in achieving effective grounding. Equalization between a station ground and power ground is accomplished by providing low-impedance connections or bonds between the station protector ground and the power ground system. The effectiveness of any telephone station power neutral ground system in limiting lightning surge voltages to earth and in providing adequate voltage equalization (to coordinate with the dielectric strength of associated equipment) is a function of the surge impedance (rather than resistance) of the entire grounding system. This includes not only the impedance of the grounding electrode but also the impedance of the connections between the equipment and the

buried grounding electrode. This entire front-of-wave voltage drop via the grounding connection to earth (IZ) is expressed as V_F and defined in the expression

$$V_F = L_G \ell \, (di/dt)$$

where

L_G = Self-inductance of the ground connection in *Henrys per foot* (an appropriate average value for telephone purposes is 0.4×10^{-6} Henrys per foot)

ℓ = Distance from end to end of the grounding conductor in feet

di/dt = Ratio of change in current in amperes per unit of time in seconds

The subsequent discussion is concerned with practical application of the above expression. (Refer to Section 876-101-130 for a list of references and extensive discussion of grounding theory, impulse characteristics of grounds, effective grounding systems, self-inductance, surge impedance, etc.)

7.03 Figure 17 illustrates the transient voltage relationships that exist when a telephone protector is discharging lightning current. Assume that lightning either strikes the drop or the associated plant in the vicinity of a subscriber station. Some proportion of the total stroke current will discharge through the protector gaps and flow on the grounding conductor to the cold water pipe at point *b*. Ultimately this stroke current reaches earth via the buried section of water pipe. Voltage V_3, produced by current Is flowing between points *a* and *d*, will appear between the telephone set and the power equipment enclosure. Potential V_1, appearing between the telephone sets and plumbing, is somewhat less than V_3 since it is only that voltage drop developed between points *a* and *b*. Another source of extraneous longitudinal potential that can appear in the vicinity of a telephone set is from lightning surges entering the premises over the power service conductors and producing a potential drop in the neutral grounding conductor between points *c* and *d*. The magnitude of such voltage is a function of the length of the power neutral grounding conductor over which we have little control.

7.04 To obtain some quantitative feel for the magnitude of inductive voltage likely to develop when stroke current enters a station conductively, two of the voltages shown in Fig. 17 should be considered: (a) V_1, which develops in the protection ground lead between points *a* and *b*; and (b) V_3, consisting of the voltage appearing between points *a* and *b* ***plus*** V_2 developed in the section of pipe from point *b* to point *d*. In each case the discharge voltage developed in the protector and mounting will supplement the potential drop appearing in the ground path. Under heavy current discharges, the drop across the protector may equal that of its initial sparkover. Referring back to the formula in paragraph 7.02, assume the following conditions:

(a) The simplified waveshape of lightning stroke current from Fig. 18 (di/dt) at the station is 1000 amperes/microsecond.

(b) ℓ = length of conductor from *a* to *b* = 10 feet; from *b* to *d* = 5 feet.

(c) LG = 0.4×10^{-6} Henrys/foot self-inductance (a good average figure for telephone work due to mutual impedance effects of nearby conducting objects).

V_1 voltage

$$V_F = (0.4 \times 10^{-6}) \times 10 \left(\frac{1.0 \times 10^3}{10^{-6}}\right)$$

$$= 4{,}000 \text{ volts}$$

V_2 voltage

$$V_F = (0.4 \times 10^{-6}) \times 5 \left(\frac{1.0 \times 10^3}{10^{-6}}\right)$$

$$= 2{,}000 \text{ volts}$$

$$V_3 = V_1 + V_2$$

$$= 6{,}000 \text{ volts}$$

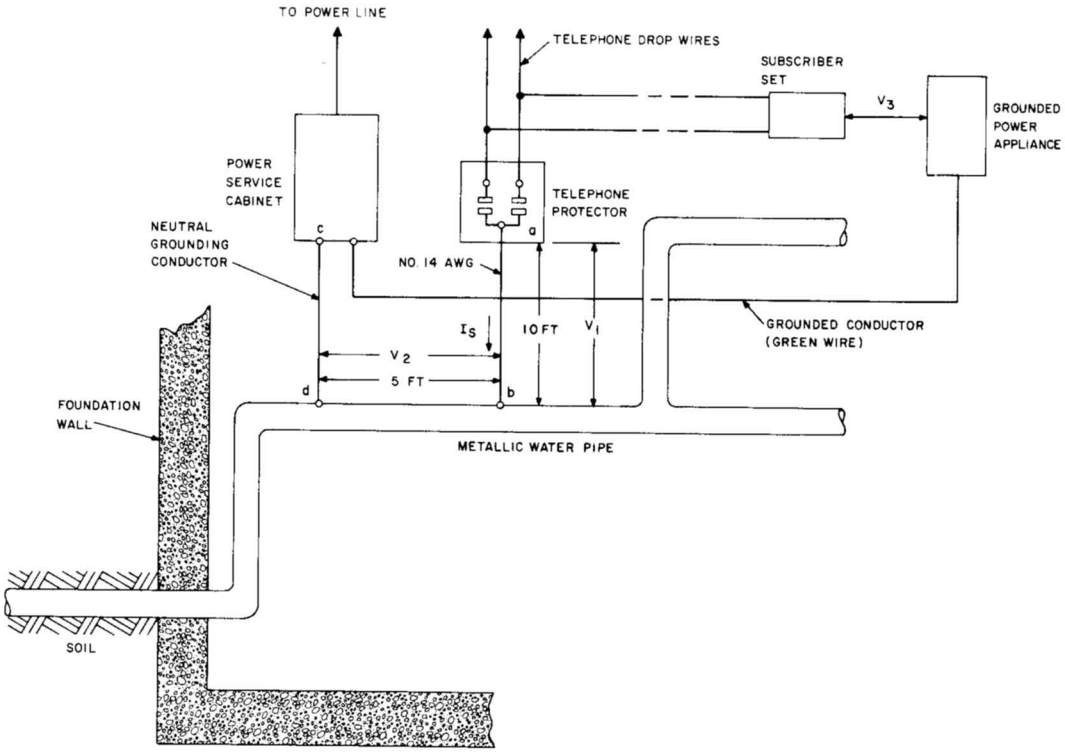

Fig. 17—Subscriber Station Protection Problem

7.05 The calculations in paragraph 7.04 show that the voltage that might appear between components of the subscriber set and a grounded power enclosure (V3, Fig. 17) would be about 6000 volts on the front of the surge. Although this magnitude of voltage is rather high, it exists for a very short interval of time (approximately 10 microseconds). This example should demonstrate clearly why effort should be made to avoid long ground leads in the planning of a subscriber installation. Ideally, all three utilities (power, telephone, and water) should enter the premises at approximately the same point to minimize the length of the grounding conductors. A helpful step in reducing the length of ground leads is the practice of mounting the station protector directly on a water pipe with a grounding strap. This minimizes voltages between station apparatus and conducting objects associated with the plumbing. Even with this improvement, a significant length of water pipe ground conductor may remain between the point where the station protector is mounted on the pipe and the point where the power neutral grounding conductor is connected to the pipe. The remedy in this case is to mount the station protector on the pipe as close as is practical to the point where the power neutral conductor is connected to minimize potential differences.

C. Hazard of Separate Grounds

7.06 If separate grounds were to be used for telephone and power protection, a person using a telephone located near a lamp or other grounded object might be exposed to electric shock. This hazard has been reduced as much as possible by providing high dielectric strength in the station equipment. The possibility of equipment damage would be increased with separate grounding systems. For example, in telephones employing 60-Hz power

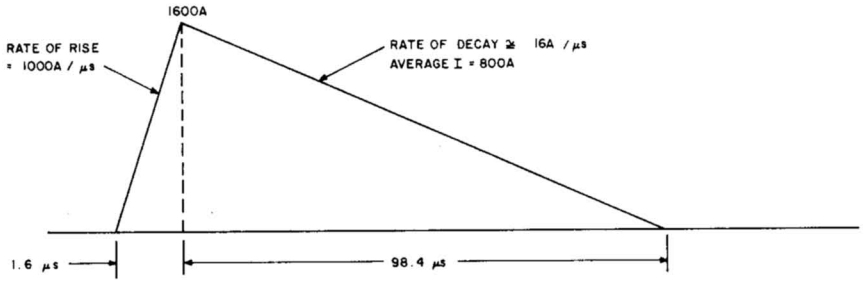

Fig. 18—Simplified Waveshape of Stroke Current in Station Ground Lead

for the dial light, the transformer is exposed continuously to voltage differences between the primary winding associated with the power source and the secondary winding connected to telephone wiring. The prevention of electric shock and station damage points up the need for common grounding to equalize or limit hazardous voltage differences.

D. Selection of Grounds

7.07 The increasing use of a nonmetallic underground piping (such as those made of concrete or plastic) have made both public and private water systems substantially less reliable as grounds than previously when water systems were constructed of metal piping. New construction very often uses plastic underground piping and existing metal systems are often repaired, replaced or altered using plastic piping. The ***1978 National Electrical Code*** now recognizes this fact in both Articles 250 covering grounding of power services and Article 800 covering grounding of communication protectors. Water pipe electrodes are no longer the first and only choice as a grounding electrode. The ***NEC*** now stresses the bonding together of all available electrodes into a system and the preferential choice for grounding the power is to any point on that system. The first choice for grounding of protectors is to the nearest available location on the system ***or*** to the power service conduit or grounding electrode conductor which is connected to the system, ***whichever results in the shortest run of grounding conductor.*** The system consists of a bonded-together assembly of all of the following electrodes which are available at the premises or structure:

(1) A metal underground public or private water pipe with at least 10 feet of metal pipe in direct contact with the earth

(2) The metal frame of a building where effectively grounded

(3) A concrete encased electrode described in the ***NEC**** as follows: "An electrode encased by at least 2 inches of concrete, located within and near the bottom of a concrete foundation or footing that is in direct contact with the earth, consisting of at least 20 feet of one or more steel reinforcing bars or rods of not less than 1/2 inch diameter, or consisting of at least 20 feet of bare solid copper conductor not smaller than a No. 4 AWG."

(4) A buried ground ring is described in the ***NEC**** as follows: "A ground ring encircling the building or structure, in direct contact with the earth at a depth below earth surface not less than 2-1/2 feet, consisting of at least 20 feet of bare copper conductor not smaller than No. 2 AWG."

*Reprinted from the 1978 National Electrical Code, Copyright National Fire Protection Association, Boston, MA 02210.

7.08 Article 250-81 of 1978 ***NEC**** states: "Continuity of the grounding or the bonding connector to interior piping shall not rely on water meters." Connections to water pipe electrodes should be made at a point where normal maintenance of meters and pumps or the installation of insulating sections for reducing vibration will not interrupt the grounding circuit. Insulated sections of pipe should be bypassed with a No. 6 bond wire (after consultation with the property owner) to maintain common grounding of the interior piping section.

7.09 In addition, it is required that the protector ground, power ground and interior metal water piping ***always*** be bonded together. Do not

use a gas pipe as the grounding electrode for a protector.

7.10 Where the elements of the grounding system exist at the premises, the selection of protector ground and the required bonding, covered in Fig. 7 to 14, will result in the best choice of ground and all of the necessary bonding.

7.11 Where the elements of the grounding system do not exist, it is still essential that power and telephone grounds be common and bonded to interior water piping even though unacceptable as an electrode. Where the power service is other than MGN and is grounded to a ground rod, it is not permissible to ground the protector directly to the power. In this case a separate telephone ground must be used and bonded to the power as shown in Fig. 12.

7.12 Grounded metallic structures (such as buried tanks, pipes, conduits and building steel) may be used for protector grounds when such structures will provide a better ground than a driven electrode. If the electric service is grounded to a buried metallic structure, the telephone protector ground should also be connected to the same structure. Also make sure there is a bond to the interior water pipe.

7.13 Where none of the previously described grounding electrodes is available, standard ground rods must be used for grounding station protectors.

8. BONDING OF POWER AND TELEPHONE GROUNDS

8.01 The procedures outlined in paragraphs 7.06 through 7.13 are intended to accomplish common grounding of power and telephone protection at the subscriber station. Wherever the situation results in separate grounds, the following arrangements must be followed:

(a) Special environmental protection is required for cable serving power stations or power switchyards. (Refer to Section 876-310-100 for complete information on protection in this hostile environment.)

(b) If an acceptable public or private water system is available and the power service is grounded to a driven electrode, the telephone protector ground must be connected in accordance with Fig. 10.

(c) Where power and telephone grounds are connected to separate rods, they must be commonly bonded together. If structural conditions make it impractical to run wire for the entire distance between rods, a metallic pipe of a cold water system (which is not likely to be disconnected or rearranged) may be used as part of the bonding run, although the pipe may not be acceptable for grounding station protectors. Building steel may also be used as part of the bonding run. In such cases, both the power and telephone ground rods must be bonded to the water pipe with a No. 6 wire. (See Fig. 12.)

(d) Where a power ground is not provided, the telephone protector must be grounded to an acceptable ground. A follow-up procedure must be established where the customer has the power grounded in accordance with the ***National Electric Code*** and then informs the telephone company when the ground is installed. The bond must then be placed by the telephone company.

8.02 To conform with recommendations of the ***National Electrical Code, 1978,*** a No. 6 copper wire should be used for bonding the telephone and power grounds. This is the minimum size wire having sufficient current-carrying capacity for practically all power fault conditions at subscriber stations.

8.03 Any grounding or bonding conductor which is run through a metallic conduit should be bonded to the conduit at both ends.

9. BONDING AND GROUNDING IN HIGH-RISE AND LOW-WIDE COMMERCIAL AND INDUSTRIAL BUILDINGS CONTAINING ELECTRONIC STATION EQUIPMENT

A. General

9.01 Current telephone company experience reveals low lightning trouble rates for telephone equipment in all types of tall buildings. However, in high-rise and low wide-area industrial or commercial buildings, the sensitivity of modern electronic equipment to surges that can appear on telephone cables and ground conductors indicates that improved

and specific grounding methods are needed to avoid future problems with this equipment. Therefore, a universal set of recommended guidelines for telephone company use, applicable to these types of buildings, appears desirable. It is recommended that required bonding be specified on work prints by the engineer and not be left to the judgement of the construction forces. A positive statement such as, "provide bonding as shown" or "no bonding required" would ensure proper instruction to the construction forces. High-rise residential-type buildings do not appear to require any special grounding and bonding procedures beyond the standard practices presently used, because very little if any sensitive electronic equipment is used in these buildings.

9.02 A high-rise building is considered to be any multistory building, over three stories, of structural steel or reinforced concrete construction. A reinforced concrete building is equivalent, electrically, to a structural steel building. This equivalency results from the use of steel reinforcing bars that are wire-tied so that they will remain in place while concrete is poured. The low wide-area building is typified by the large shopping mall, factory, or warehouse.

B. Recommendations

9.03 To improve the bonding and grounding methods used in high-rise industrial and commercial buildings, and to minimize longitudinal potential differences at the interface between local equipment ground and the talking pairs, the following recommendations are made. A typical high-rise building floor is shown in Fig. 19 to illustrate application of these recommendations. A typical low-wide building is shown in Fig. 20.

9.04 ***Shielded riser cables*** should be used. These are now used in most buildings. If unshielded riser cables are used or if shield continuity cannot be assured, see paragraph 9.10.

9.05 ***Shield ground at entrance:*** The cable shield should be bonded to an approved ground at the point of entrance as now required in Section 631-460-102.

9.06 ***Shield continuity*** should be maintained over the entire cable length as now required in Section 631-460-102. If shielded house cables are used, continuity should be maintained between the house cable shield and the riser cable shield.

9.07 A suitable grounding terminal must be provided at the Building Entrance Facility (BEF) and in each equipment space and riser closet. This applies to both high-rise and low-wide buildings. The grounding terminal in the BEF must be on or as close to the protector as possible (if entrance is protected) and bonded to the entrance cable shield and protector grounding lug with a No. 6-gauge copper wire.

9.08 ***Shield ground on floors:*** The ***riser cable shield*** should be bonded to an approved floor ground, using a No. 6-gauge copper bond wire, at every point where the conductors enter or leave the shielded riser cable. Where pairs enter or leave the cable to feed more than one floor above or below the floor where the riser cable shield is grounded, an additional shield ground is required on the floor that is fed. If conductors do not enter or leave the cable on a floor, the cable shield does not require grounding on that floor. The connections from the shield to the approved floor ground must be done in the riser closet. The shield must be connected to the grounding terminal in the riser closet (paragraph 9.07) and the grounding terminal connected to one of the following approved floor grounds:

- Building steel
- Metallic water pipes
- Power feed metallic conduit supplying panel board(s) on the floor
- The grounding conductor for the secondary side of the power transformer feeding the floor. (If this option is selected, the connection to the grounding coductor should be made by a licensed electrician.)
- A grounding point specifically provided in the building for the purpose.

DANGER: If the approved ground (or approved floor ground) can only be accessed inside a dedicated power equipment room, then connections to this ground should be made by a licensed electrician.

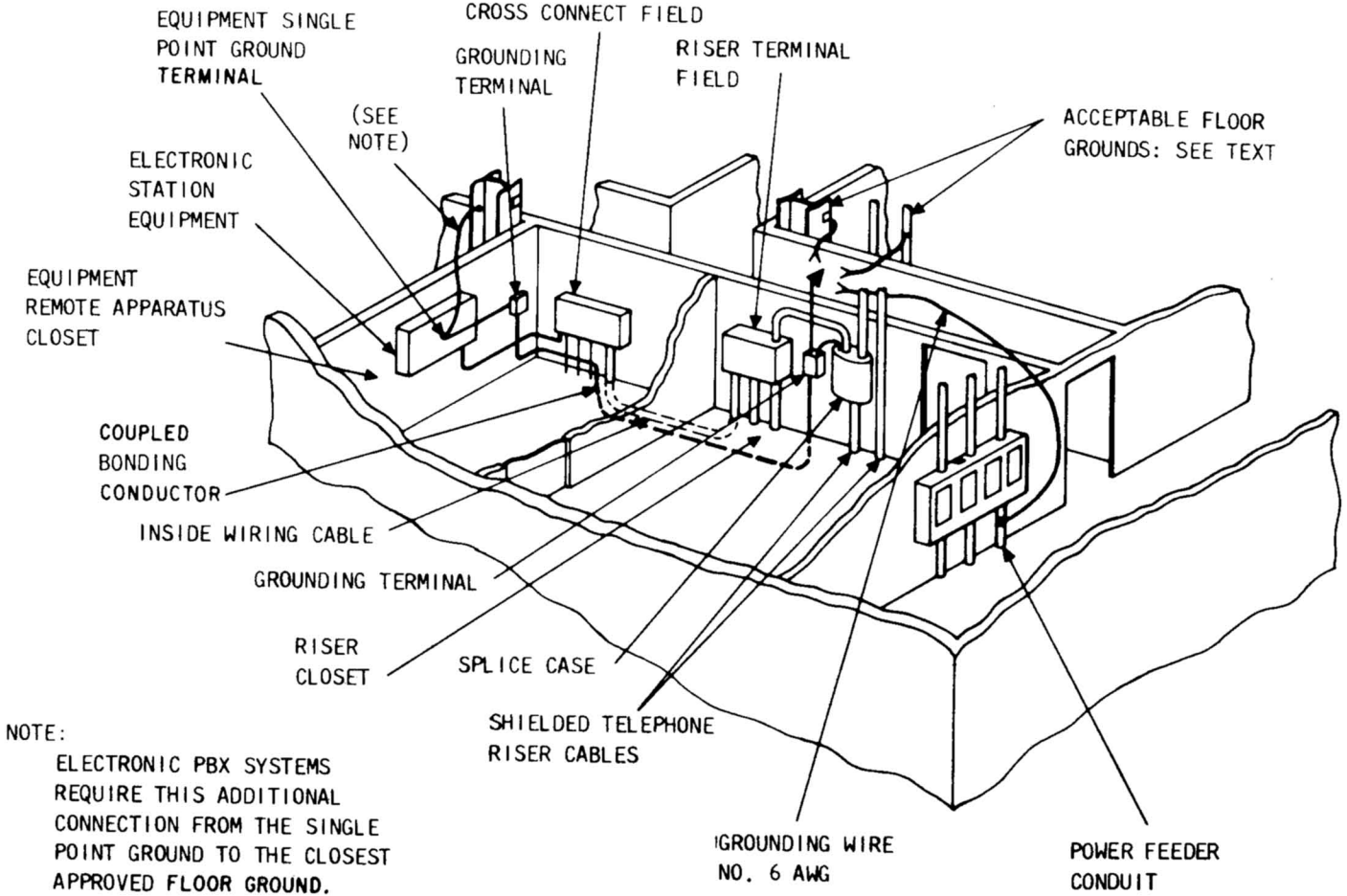

Fig. 19—Equipment Bonding—Typical High Rise Building Floor

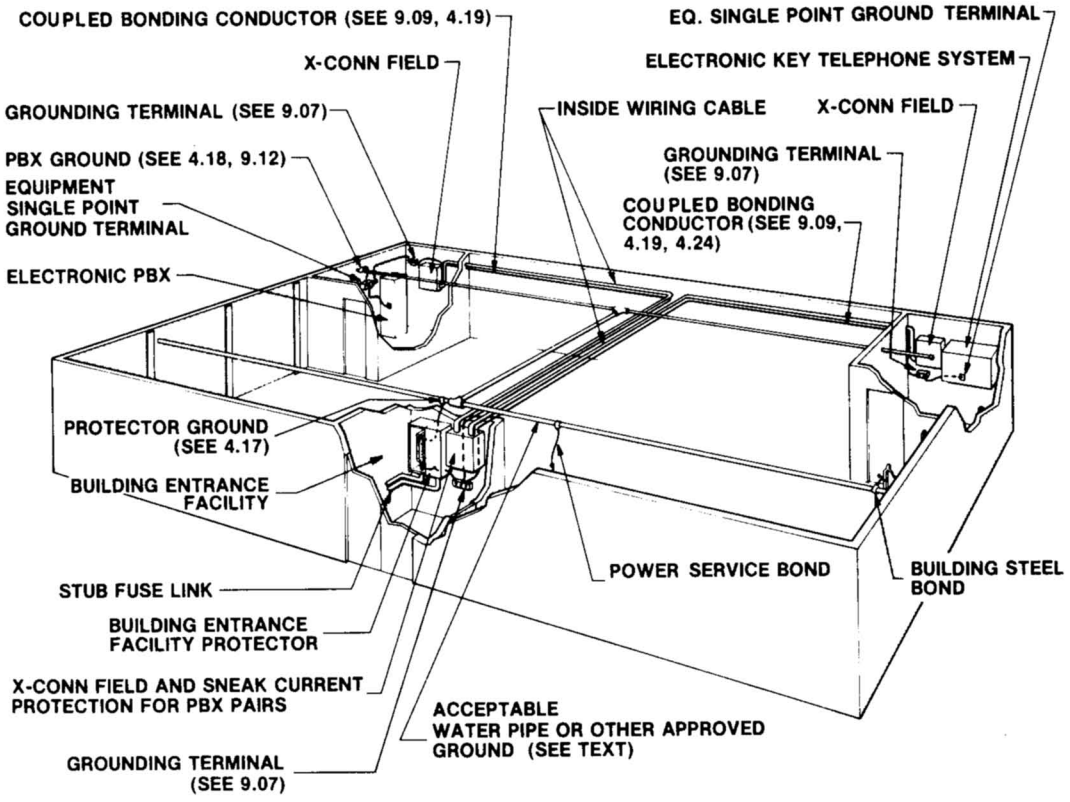

Fig. 20—Equipment Bonding—Typical Low-Wide Building

9.09 ***A coupled bonding conductor*** must be provided from the riser closet grounding terminal in a high-rise building or from the BEF grounding terminal in a low-wide building to each equipment room (remote apparatus closet) grounding terminal. This coupled bonding conductor can be any one of the following: (1) a 10-gauge copper wire, tie wrapped to the house cable from the riser closet or BEF (low-wide building) to each equipment room, (2) the shield of the house cable from the riser closet or BEF (low-wide building) to each equipment room provided that the house cable shield is continuous and constructed with permanent bonding hardware such as D-bond clamps and ***not*** temporary bonding hardware such as two B-Bond clips with a single 14-gauge appliance wire, (3) a minimum of six spares of 24-gauge copper wire.

9.10 ***Unshielded riser cables:*** If it is not economically feasible to use shielded riser cable, or if shield continuity cannot be assured, a No. 6-gauge copper ground riser should be run with each unshielded riser cable route. The effect of this ground riser is approximately equivalent to a cable shield. The ground riser should be grounded as if it were the cable shield in accordance with recommendations in paragraphs 9.05, 9.06, 9.07 and 9.08.

9.11 ***Riser location:*** Riser cables should be run as close as possible to vertical grounded conductors and in the central portion of the building. Lightning currents are minimal near the central portion of the building, and the mutual induction of the riser cable and vertical grounded conductors minimizes induced potentials on the talking pairs. Although the riser shaft locations are not under telephone company control, a choice may exist and the BIC should request a favorable riser cable route.

9.12 These bonding and grounding recommendations satisfy requirements for key telephone systems in high-rise and low-wide buildings. It should be noted that Electronic PBX systems require an additional connection from the equipment single-point ground terminal to an approved floor ground or an approved ground closest to the equipment as shown in Fig. 19 and 20.

10. REFERENCES

10.01 The following practices pertain to station and PBX protection:

SECTION	TITLE
201-202-101	Main Distributing Frames—Type of Protection
201-207-801	300-Type Connectors and Associated Protection Units Including 121-Type Protectors
460-100-400	Station Protection and Grounds
461-220-100	Mobile Home Wiring Permanent Type
461-220-101	Recreational Vehicle Wiring Nonpermanent Type
518-010-105	Key Telephone System—Grounding and Special Protection Requirements
553-100-210	Switching Cabinets and Consoles—J58849 (A, B) (MD) and (D, E)—Installation, Connections, and Installation Tests—Nonpackaged 800A PBX
553-100-211	Switching Cabinets and Consoles—Installations, Connections, Service Options, and Installation Tests—Packaged 800A PBX
553-201-200	Installation, Connection, Service Options and Installation Test—801A PBX
553-205-200	Switching Cabinet and Console—Identification, Installation, Connection, Service Option and Tests 805A PBX
553-212-200	Installation, Connectors, Service Options and Installation Tests 812A PBX
554-101-101	Dimension* PBX Customer Switching System 201S Preinstallation Information

SECTION	TITLE
631-400-102	Cable and Terminal Grounding in Subscriber's Buildings—General
636-300-100	300-Type Connectors—Description, Installation
636-320-100	Description, Installation, and Marking—302-Type Connectors
636-330-100	303-Type Connectors—Description
638-205-015	Fuse Cable Requirements
802-001-ZZZ	Protective Grounding Systems (see key-numbered sections for specific types of ground systems)
876-101-100	Electrical Protection Devices
876-101-130	Electrical Protection Grounding
876-210-100	Electrical Protection of Radio Stations
876-310-100	Electrical Protection of Wire Plant Communication Facilities Serving Power Stations
876-400-100	Electrical Protection—Cable
916-559-770	Cable Termination Facilities—Central Office Type -General

*Trademark of American Telephone and Telegraph Company.

10.02 The following additional references apply to PBX protection.

CPCN-135KY	(Customer Product Change Notice) PBX Systems, 801A PBX Class A Change, November 27, 1973
EL 876	800A PBX Protection and Grounding
EL 2047	800A Lightning Protection (Supplements EL 876)
EL 5393	PBX Systems—DIMENSION® 100 and 400 PBX's Revision in AC Power and Grounding Requirements
SBM 5301	Engineering Complaint Final Report 801A PBX Internal Grounding (available from BTL field representative)

GLOSSARY OF TERMS

Approved Floor Ground—A ground on a floor of a high-rise building suitable for connection to the grounding terminal in the riser closet and to the PBX equipment single point ground. Such grounds may be any one of the following: building steel, metallic water pipes, power feed metallic conduit supplying panel boards on the floor, the grounding conductor for the secondary side of the power transformer feeding the floor, or a grounding point specifically provided in the building for the purpose (see Fig. 1-1).

Approved Ground—A ground in a low-wide or non-high-rise building suitable for connection to the Building Entrance Facility protector, the entrance cable shield, or the PBX equipment single point ground. With the 1978 National Electric Code, water pipe electrodes are no longer the first and only choice as a grounding electrode. The new code stresses the importance of bonding together all available electrodes into a system. The first choice for grounding of protectors and the PBX equipment single point ground is to the nearest available location on the system, or to the power service entrance conduit or grounding electrode conductor which is connected to the system, ***WHICHEVER RESULTS IN THE SHORTEST RUN OF GROUNDING CONDUCTOR*** (see Fig. 1-1).

Arrester—A protection device used on power lines to limit the line-to-ground surge voltage due to lightning while simultaneously interrupting "power follow", ie, the discharge of normal power.

Bond(ing)—The permanent joining of metallic parts to form an electrically conductive path which will assure electrical continuity and the capacity to conduct any current likely to be imposed. Bonding provides equalization of potential between separated connections to ground.

Building Entrance Facility—A space provided on the customer premises for termination of distribution cable.

Carbon Blocks—A pair of electrodes made of carbon that provide an air discharge gap of a specified dimension.

Carbon Block Protector—A protector that uses carbon blocks for voltage limiting.

Coupled Bonding Conductor—A conductor following the same route and tie-wrapped to unshielded inside wiring cable. It is connected to the lug on the building entrance facility protector and to the equipment single point ground terminal. Due to the mutual coupling between this wire and the tip and ring conductors, the potential difference appearing on terminating equipment is minimized. This conductor can consist of a shield, spare-pairs of the inside wiring cable, or a wire tie wrapped to the inside wiring cable. In a high-rise building, the Coupled Bonding Conductor terminates on the ground terminals (which is connected to the riser cable shield or ground riser) in the riser closet and is routed with the lateral to each equipment room, where it is terminated on a grounding terminal and extended to each equipment single point ground terminal. In a low-wide building, the coupled bonding conductor is connected to the grounding terminal (or protector ground lug) in the building entrance facility room and is routed with the lateral cables to each equipment room where it is terminated on a grounding terminal and extended to each equipment Single Point Ground terminal (see Fig. 1-1).

Customer Premises Equipment—Any equipment such as PBX systems, key systems, data sets, etc. This term is often used interchangeably with the term station equipment in protection practices.

Equipment Closet—A space provided in a customer's premises where telephone equipment such as PBX and key systems or cross connecting facilities are located. This space is sometimes called apparatus closet, or remote apparatus closet.

Exposed Facilities—Any cable facilities subject to the effects of lightning, power crosses, power

NOTICE
Not for use or disclosure outside the
Bell System except under written agreement

induction, or differences in ground potential. Exposure to lightning necessitates the use of protectors. Exposure to power (above 300V rms to ground) necessitates the use of cable fuses, fusible links, or station fuses, as well as protectors. Exposure to power also necessitates the use of sneak current fuses or circuits which have a low impedance path to ground.

Foreign Voltage (current)—Any voltage (current) imposed on the telephone plant that is not supplied from the central office or from telephone equipment.

Fuse—An overcurrent protective device with a circuit-opening fusible part that is heated and severed by the passage of overcurrent through it.

Fuse Cable—A length of protective cable having 24- or 26-gauge copper conductors that is inserted in the plant and intended to fuse open on foreign power currents before the station wiring cable or apparatus which it protects. It does not protect against lightning currents.

Fuse Link—A conductor, usually block wire, that serves the same purpose on wire plant as fuse cable on cable plant.

Gas Tube Protector—A protector that has spark gaps which discharge in a gas atmosphere within a glass or ceramic envelope.

Ground—A conducting connection, intentional, or accidental, between a circuit or equipment and the earth, or to some conducting body that serves in place of the earth.

Ground (Earth) Resistivity—The measured DC resistance of a volume of earth usually expressed in meter-ohms.

Ground Potential Rise—A voltage difference between grounding electrodes due to the conduction of earth return currents. Ground Potential Rise (GPR) on cable pairs can exist when lightning currents are conducted to ground at the station protector. The GPR is most widely recognized as voltages generated due to power fault current conducted to ground.

Ground Riser—A No. 6-gauge copper wire run as a coupled wire with a riser cable when a continuous shield cannot be assured. This wire must be grounded at locations where the riser cable shield would have required a ground.

Grounding Terminal—A suitable bar, bus, terminal strip or binding post terminal whereby grounding and bonding conductors can be connected. A grounding terminal may be required in the BEF room to accomodate connection of the ground riser, equipment bonding conductors, entrance cable shield and protector ground lug. Connections to the riser cable shield, ground-riser, approved floor ground, and equipment bonding conductor should be made on the grounding terminal in a riser closet in a high-rise building. Connection to the equipment bonding conductor from the PBX or key system single point ground may be made to the grounding terminal in the equipment room. Connections to the grounding terminals are considered to be terminations of grounding conductors and do not qualify as splices, and thus are permitted. The grounding terminal in the BEF may be located on or adajacent to the station protector (see Fig. 1-1).

Heat Coil—A device which grounds a conductor when overheated by current.

High Rise Building—Any multi-story building over three stories of structural steel or reinforced concrete construction.

Induction—

(a) ***Electric Induction***—Voltage-controlled currents induced in a conductor, such as telephone lines, by capacitive coupling from the electric field of a nearby power line.

(b) ***Magnetic Induction***—Currents induced in a conductor, such as telephone lines, by inductive couplings from the magnetic field of a nearby power line.

Insulating Joint—A splice in a cable sheath where the continuity of the sheath, shield, and moisture barriers are deliberately interrupted to prevent the flow of electrolytic currents that may cause corrosion.

Joint Random Spacing (Separation)—Where telephone cable is buried in the same trench with power conductors and no deliberate attempt is made to maintain a separation between the two systems.

Key Telephone System Ground Terminal—A screw terminal located on the Key System power supply which must be connected to the grounding lug on the station protector. This connection must be made via a coupled bonding conductor. The ground terminal may be marked "G", "GRD", or "LOC GRD," but is the power supply output ground and designated as the Key Telephone System (KTS) Single Point Ground terminal for purposes of this document. No connections other than to the protector grounding lug are permitted from the KTS Single Point Ground terminal.

Low-Wide Building—A building typified by the large shopping mall, factory or warehouse. The PBX and key systems may be located remotely from the entrance facility protector and thus creating the need for paying special attention to grounding and bonding.

Multiground Neutral (MGN) System—A power system where the neutral conductor is continuously present along with the phase conductors and is grounded at least four times per mile.

PBX Ground Conductor—A connection from the PBX single point ground terminal to an approved ground in a non-high-rise building via the shortest and straightest route. It is a connection from the PBX Single Point Ground terminal to an approved floor ground in a high-rise building via the shortest and straightest route (see Fig. 1-1).

Primary Power—Power operating at more than 300 volts rms to ground.

Protector—A device used to limit foreign voltages on telephone conductors.

Protector (Station or Central Office)—A protector which limits voltage between telephone conductors and ground. Equipped with 3-mil (white) blocks or gas tubes.

Protector Bond—This is the wire called the coupled bonding conductor and has been referred to as the protector bond in some documentation of PBX systems.

Protector Ground Conductor—A wire run from the ground lug on the protector to an approved ground via the shortest and straightest route (see Fig. 1-1).

Protector Unit—A device containing carbon blocks, or a gas tube, in combination with shorting devices and/or heat coils, that screws or plugs into a protector, protected terminal, connecting block or central office connector.

Riser Cable—A cable run vertically in a high-rise building for providing pairs to each floor. It is preferable that this cable be shielded. To minimize voltages due to lightning strokes to the building, the riser cables should run along the central axis of the building.

Riser Closet—A space provided on a floor of a high-rise building for terminating pairs which leave the riser cable to feed that floor.

Secondary Power—Power operating at less than 300 volts to ground. Typically 120/240 or 277/480 volts rms.

Single Point Ground Terminal—A connecting point provided with PBX and key systems. It is the only acceptable point for connection from the equipment to the external protection grounding system. The Single Point Ground terminal for key systems is called the power supply output circuit ground (local ground). The Single Point Ground terminal for PBX systems has been called the wall mounted ground window for the Dimension® PBX and it has been called the Thomas and Betts (T&B) Lug for the 800/801 PBX systems (see Fig. 1-1).

Sneak Current—A foreign current flowing to ground through terminal wiring and equipment that is driven by a voltage that is too low to cause a protector to arc over to ground.

Sneak Current Fuses—Devices which either divert or interrupt currents which flow throw station wiring and equipment to ground. These currents are driven by voltages which are too low to operate station protectors. Heat coils are sneak current fuses which divert such current to ground. Sixty-type fuses interrupt such current flow.

Splice (Ground Wire)—A method whereby ground wire is extended by joining two or more separate sections together by mechanical connectors. Every attempt must be made to keep ground or bond conductors free of splices between authorized terminations. Authorized terminations for ground and bond wire include approved ground, approved floor ground, protector ground lug, grounding

terminal, cable shield, and ground riser and equipment Single Point Ground terminal. Where spare pairs are used for the coupled bonding conductor, through connections at cross-connect points are unavoidable. Measures should be taken to tag each spliced access point indicating the use of these pairs as coupled bonding conductors.

Station Equipment—see customer premises equipment.

Station Fuses—A device such as an 11-type fuse which is used in place of a cable fuse link, stub fuse link, or fine gauge cable. The station fuse ***does not*** satisfy requirements for protectors or sneak current fuses.

Surge Impedance—The impedance of a ground electrode at the frequency of the current wave applied. At low frequency, the surge impedance is close to the dc resistance. When a surge is applied, the instantaneous impedance varies with time and is dependent on the waveform of the surge and the physical characteristics of the particular grounding electrode.

Thunderstorm Day—Any day during which thunder is heard at a specific observation point. Such observations confirm the presence of lightning but do not provide information on the number of strokes to earth.

Water Pipe Area—An area, usually urban or surburban, having an extensive metallic undergound water system and where the power services at buildings are normally grounded to the water pipe system.

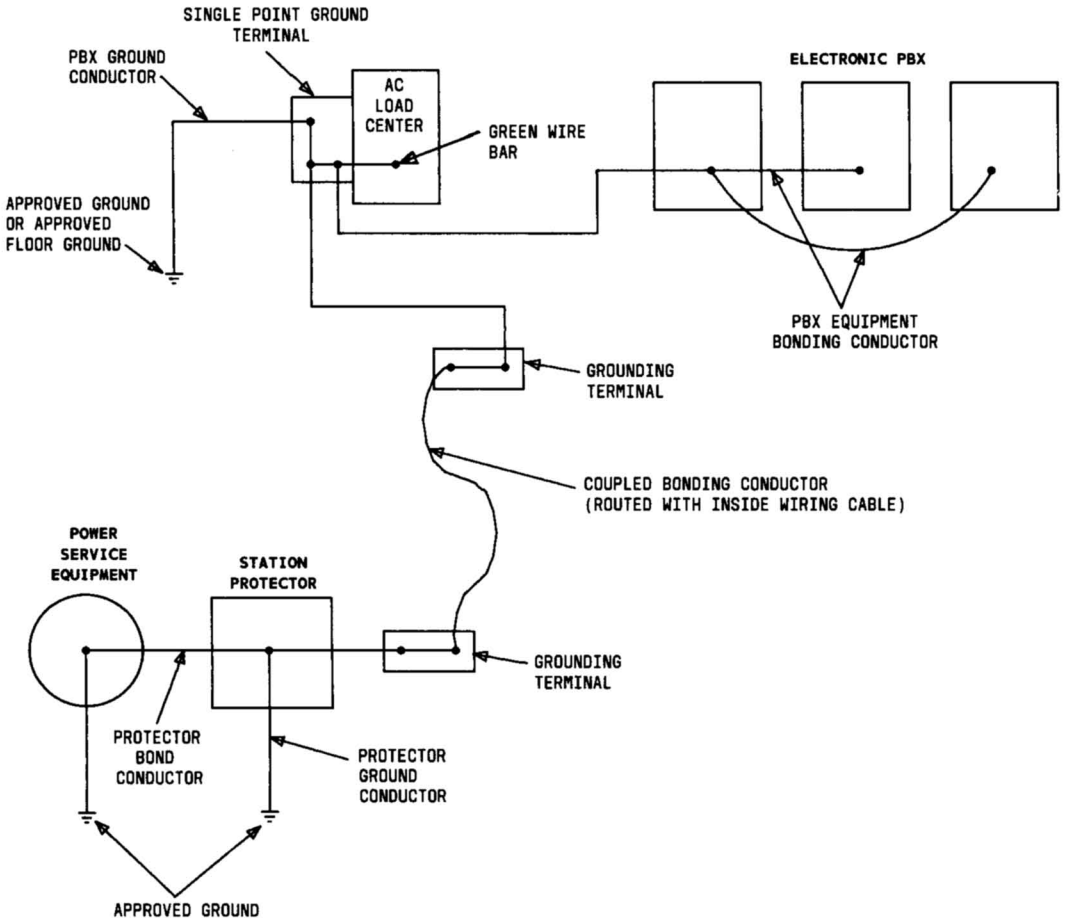

Fig. 1-1—Terminology Used in Typical Electronic PBX Installation