COPY NO._____

CONTAINS BSP ITEMS IN MP SERIES
RELEASED WITH CHECKING LIST
BSP A 128,819

ISSUE_____, LISTS_____

ISSUE_____, LISTS_____

ISSUE_____, LISTS_____

ISSUE_____, LISTS_____

ISSUE_____, LISTS_____

TOLL SWITCHING SYSTEM No. 4A

SEQUENCE CHARTS, OPERATIONAL SKETCHES
AND
REFERENCE MATERIAL

BELL TELEPHONE LABORATORIES
INCORPORATED
SWITCHING SYSTEMS DEVELOPMENT DEPARTMENT
463 WEST STREET
NEW YORK 14

PRINTED
IN
U.S.A.

ISSUE	1	C.R.D.	
DATE	11-24-50	E.R.B.	

MASTER LEGEND FOR SEQUENCE CHARTS

1. RELAY OR OTHER APPARATUS OPERATIONS AND RELEASES ONLY ARE SHOWN.

2. VERTICAL PROGRESSION DOWNWARD SHOWS RELATIVE TIME PHASE OF RELAY OR OTHER APPARATUS MOVEMENTS (OPERATION OR RELEASE).

3. COORDINATES ARE USED TO LOCATE THE POSITION OF APPARATUS ON SC'S. THE HORIZONTAL COORDINATE IS ALPHABETICALLY DESIGNATED. THE VERTICAL COORDINATE IS NUMERICALLY DESIGNATED STARTING WITH 101 ON SHEET 1, 201 ON SHEET 2, ETC. THUS D304 MEANS VERTICAL COLUMN D, SHEET 3, HORIZONTAL LINE 4.

4. THE FOLLOWING TABLE SHOWS, ON A LINE BASIS, THE OPERATE AND RELEASE TIMES WHICH ARE USED FOR THE APPARATUS:

APPARATUS	OPERATE	RELEASE
ALL RELAYS EXCEPT SLOW OPERATE, SLOW RELEASE, TIMED AND MULTICONTACT	1 LINE	1 LINE
SLOW OPERATE RELAYS	2 LINES(MIN.)	1 LINE
SLOW RELEASE RELAYS	1 LINE	2 LINES (MIN.)
TIMED RELAYS, COLD CATHODE TUBES ETC.	SEE NOTE 11	SEE NOTE 11
MULTICONTACT RELAYS	2 LINES	1 LINE
SELECT MAGNETS	2 LINES	1 LINE
HOLD MAGNETS	2 LINES	1 LINE
PERFORATOR MAGNETS	2 LINES	2 LINES
OTHER APPARATUS	1 LINE	1 LINE

5. OPERATE SYMBOLS: EXPLANATION:

(A) AL — AL RELAY OR OTHER APPARATUS COMES TO FULLY OPERATED CONDITION AT THIS POINT. FOR POLAR RELAYS WITHOUT BIASING SPRINGS, THE ARMATURE HAS MOVED TO FRONT OR LEFT CONTACT.

(B) RDR PIN — READER PINS ARE MOVED TO PASS THROUGH THE PERFORATED HOLES IN TAPE AT THIS POINT. READER PIN CONTACTS ARE CLOSED ONLY IF A HOLE IS PERFORATED.

(C) (B) TC — TC INTERRUPTER OR TIMER HAS CLOSED ITS B CONTACT.

6. RELEASE SYMBOLS: EXPLANATION:

(A) AL — AL RELAY OR OTHER APPARATUS COMES TO FULLY RELEASED CONDITION AT THIS POINT. FOR POLAR RELAYS WITHOUT BIASING SPRINGS, THE ARMATURE HAS MOVED TO BACK OR RIGHT CONTACT.

(B) RDR PIN — READER PINS ARE MOVED AWAY FROM THE TAPE AND ALL READER CONTACTS ARE OPENED AT THIS POINT.

(C) (PU) TC — TC INTERRUPTER OR TIMER HAS OPENED ITS PU CONTACT.

7. COMBINED OPERATE AND RELEASE SYMBOL: EXPLANATION:

Z — Z RELAY OR OTHER APPARATUS HAS EITHER OPERATED OR RELEASED.

8. SYMBOL DESIGNATIONS:

THE OPERATE (✕) AND RELEASE (+) SYMBOLS ARE USED IN CONJUNCTION WITH THE FOLLOWING DESIGNATIONS:

(A) RELAY WINDING DESIGNATIONS: EXPLANATION:

1) C- — ONE OR MORE OF CO TO C_n OR CA TO C_n
2) CO-9 OR CO-C_n — ALL OF CO TO C9 OR CD TO C_n INCLUSIVE
3) FA-D — ALL OF FA TO FD INCLUSIVE
4) A,C — BOTH A AND C
5) CB-(-1) — ALL CB- EXCEPT ONE
6) HG$\frac{2}{5}$ — A COMBINATION OF "2 OUT OF 5"
7) L/R — EITHER L OR R OR ONE OF A SERIES L TO R
8) (TOP) MC — TOP HALF OF MC MULTICONTACT RELAY
9) (BOT.) MC — BOTTOM HALF OF MC MULTICONTACT RELAY
10) MC — BOTH HALVES OF MC MULTICONTACT RELAY

(B) OTHER APPARATUS DESIGNATIONS: EXPLANATION:

1) AR KEY — AR KEY CONTACT
2) A JACK — A JACK CONTACT
3) AL LAMP — AL LAMP
4) T HOLD — T HOLD MAGNET
5) J SEL. — J SELECT MAGNET
6) U STEP 10/20 — U STEP MAGNET. BRUSHES ARE IN CONTACT WITH BANK TERMINAL 10 OR 20
7) PAC MAG. — PAC MAGNET
8) A2 PERF. — A2 PERFORATOR MAGNET
9) VAR VARISTOR — VAR VARISTOR (✕ CONDUCTING, + NON-CONDUCTING)
10) TWA TUBE — TWA TUBE
11) CL- PH. TRAN. — CL- PHOTO TRANSISTOR (✕ CONDUCTING, + NON-CONDUCTING)

9. CONNECTING LINES:

(A) VERTICAL LINES ARE USED TO LINK CAUSES WITH EFFECTS ON SUCCEEDING LINES AS:

LINE 101 ✕A
LINE 102 ✕B

EXPLANATION: B RELAY HAS OPERATED ON LINE 102 AS RESULT OF RELAY A OPERATION ON LINE 101.

(B) HORIZONTAL AND VERTICAL LINE COMBINATIONS ARE USED AS FOLLOWS:

EXPLANATION:

CONNECTION BETWEEN LINES

NO CONNECTION BETWEEN LINES

(C) HORIZONTAL AND OBLIQUE LINES ARE USED TO CONNECT MULTIPLE CAUSES PRODUCING A COMMON EFFECT OR TO CONNECT MULTIPLE EFFECTS PRODUCED BY THE SAME CAUSE AS:

LINE 101 ✕A ✕B
LINE 102 ✕C

EXPLANATION: C RELAY HAS OPERATED ON LINE 102 AS RESULT OF BOTH A AND B RELAY OPERATION ON LINE 101. NEITHER A NOR B RELAY OPERATION ALONE IS SUFFICIENT TO OPERATE C RELAY.

LINE 101 ✕A
LINE 102 ✕B ✕C

RELAYS B AND C HAVE OPERATED ON LINE 102 AS RESULT OF RELAY A OPERATION ON LINE 101.

A B C D
LINE 101 ✕HGK
LINE 102 A104
LINE 103 ✕LCK D101
LINE 104 ✕TK

TK RELAY HAS OPERATED ON LINE 104 AS RESULT OF OPERATION OF BOTH HGK ON LINE 101 AND LCK ON LINE 103. NEITHER HGK NOR LCK OPERATION ALONE IS SUFFICIENT TO OPERATE TK. THE DIAGONAL LINE MAY BE CONTINUOUS OR AS SHOWN. DESIGNATIONS A104 AND D101 REFER TO COORDINATE POSITIONS OF RELAYS.

(D) APPARATUS OPTIONS OR FUNCTIONAL OPTIONS ARE SHOWN BY A BREAK IN THE HORIZONTAL AND VERTICAL CONNECTING LINES.

LINE 101 ✕A ✕B ✕C
LINE 102 ✕D

EXPLANATION: D RELAY HAS OPERATED ON LINE 102 AS RESULT OF EITHER A, B, OR C RELAY OPERATION ON LINE 101.

FUNCTIONAL OPTIONS ARE EXPLAINED ON THE SC. IF A NOTE IS REQUIRED TO EXPLAIN THESE OPTIONS IT IS TO BE INTERPRETED AS PER NO. 14 ON OS 000-2.

10. ARROWHEADS:

ARROWHEADS ARE USED TO BLOCK AND LIMIT EFFECTS OF RELAY OPERATIONS ON EACH OTHER. THEY MAY BE PLACED AT THREE DIFFERENT POSITIONS ON CONNECTING LINES.

EXAMPLE: EXPLANATION:

(A) ✕A ✕B ✕C ✕D ✕E

D AND E RELAYS WILL NOT OPERATE UNTIL BOTH A AND B HAVE OPERATED, BUT C WILL OPERATE INDEPENDENTLY OF B.

(B) ✕A ✕B ✕C ✕D ✕E

E RELAY OPERATES FROM B ONLY; D FROM B AND A; AND C FROM A ONLY.

(C) ✕A ✕B ✕C ✕D ✕E

OR

✕A ✕B ✕C ✕D ✕E

D RELAY WILL NOT OPERATE UNTIL BOTH B AND A HAVE OPERATED. ALSO E AND C WILL OPERATE FROM B INDEPENDENTLY OF A.

(D) IN SOME CASES TWO ARROWHEADS MAY BE SHOWN AS:

✕A ✕B ✕C ✕D ✕E ✕F

D AND E RELAYS ARE DEPENDENT UPON OPERATION OF BOTH A AND B. ALSO, C WILL OPERATE FROM A INDEPENDENTLY OF B, AND F WILL OPERATE FROM B INDEPENDENTLY OF RELAY A.

11. THE TIME DELAY INTRODUCED BY A TIMED CIRCUIT IS SHOWN THUS:

EXAMPLE: EXPLANATION:

(A) LINE 101 ✕CWA
LINE 102 = 2 SEC.
LINE 103 ✕TMA TUBE

TMA TUBE OPERATES 2 SECONDS AFTER CWA RELAY OPERATES.

(B) LINE 101 ✕HO
LINE 102 = .041 SEC.
LINE 103 ✕HO

HO INTERRUPTER CONTACT IS CLOSED FOR APPROXIMATELY .041 SEC.

12. A DOTTED VERTICAL LINE MAY DENOTE EITHER OF THE FOLLOWING:

✕A ✕C ✕B ✕D

1) INTERMEDIATE ACTION ALREADY SHOWN ELSEWHERE OR IRRELEVANT TO THE JOB SHOWN HERE.
2) INDEFINITE TIME INTERVAL.

13. PUNCH DESIGNATIONS AND LAMP INDICATIONS ARE SHOWN ON SEQUENCE CHARTS IN THE FOLLOWING MANNER:

1) A SOLID INVERTED TRIANGLE (▼) INDICATES THAT A PERFORATION IS MADE OR A LAMP IS LIGHTED IF A TROUBLE RECORD IS TAKEN AT THIS TIME.
2) A SOLID UPRIGHT TRIANGLE (▲) INDICATES THAT A PERFORATION IS NOT MADE OR A LAMP IS NOT LIGHTED IF A TROUBLE RECORD IS TAKEN AT THIS TIME.

EXAMPLE: EXPLANATION:

(A) ✕RK ▼ — + RK ▲

RELAY AND PUNCH (OR LAMP) HAVE THE SAME RK DESIGNATION AND ARE UNDER CONTROL OF THE SAME CAUSE; OR THE PUNCH (OR LAMP) IS UNDER CONTROL OF THE RELAY.

(B) ✕PR2 ✕LC ▼PI

+ PR2 LC ▲PI

THE PUNCH (OR LAMP) HAS A DIFFERENT DESIGNATION FROM ITS CONTROLLING CAUSE.

14. ✕TS ✕TVO(TRL)

THE CIRCUIT MOST FREQUENTLY USED IN A PARTICULAR SEQUENCE CHART IS IDENTIFIED BY AN ASTERISK OPPOSITE ITS SD NUMBER IN THE LIST OF DRAWINGS ABOVE THE TITLE BLOCK. NO CIRCUIT ABBREVIATIONS ARE SHOWN ON THE SEQUENCE CHART NEXT TO RELAYS ASSOCIATED WITH THIS CIRCUIT. THE CIRCUITS IN WHICH ALL OTHER RELAYS APPEAR ARE SHOWN IN BRACKETS ADJACENT TO THE RELAY DESIGNATIONS ON THE SEQUENCE CHART (SEE EXAMPLE).

TRANSLATOR CKT. SD-25754-01, ISS. 8
*TRANSVERTER CKT. SD-25802-01, ISS. 3

15. THIS LEGEND APPLIES, WITH SOME EXCEPTIONS, TO SEQUENCE CHARTS PROVIDED ON OS'S. SEE OS 000-2, NO. 13A.

MASTER LEGEND FOR SEQUENCE CHARTS

SC 000-2

MP-11640

ISSUE	DATE
1	6-14-61

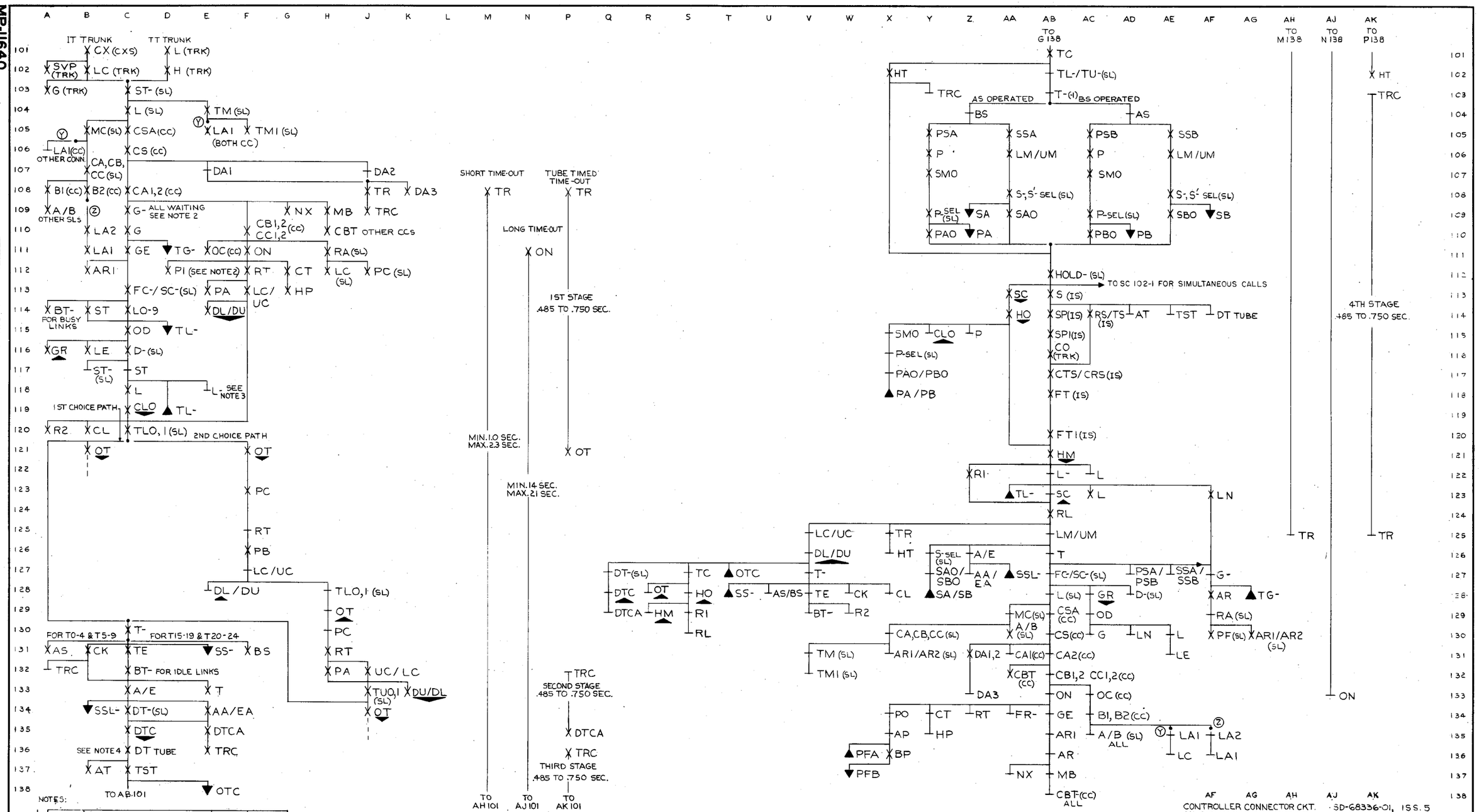

NOTES:

1.

SC OPTION	FEATURE OR OPTION	SD OPTION	SD
Y	IF ACCESS IS REQUIRED TO 12 OR LESS SDR. LINK FRS.	Y	68336-01
Z	IF ACCESS IS REQUIRED TO 12 OR MORE SDR. LINK FRS.	Z	68336-01

2. ASSUMES PO AND AP OPERATED FROM PREVIOUS CALL.

3. ALL L's EXCEPT THOSE ASSOCIATED WITH TRUNKS HAVING GROUNDED START LEADS.

4. ASSUMES NO COMPETING CONTROLLERS.

AF	AG	AH	AJ	AK
CONTROLLER CONNECTOR CKT.			SD-68336-01,	ISS. 5
CX SIGNALING CKT. TYPE B			SD-95048-01,	ISS. 12
INCOMING SENDER CKT-DP			SD-68221-01,	ISS. 12
* LINK CONTROLLER CKT.			SD-68028-01,	ISS. 24
SDR. LINK & CONNECTOR CKT.			SD-68334-01,	ISS. 11
TOLL TANDEM TRUNK CKT-DP			SD-68315-01,	ISS. 5
2-WAY INTERTOLL TRUNK CKT-DP INCOMING			SD-68232-01,	ISS. 8

LINK CONTROLLER
OVER-ALL OPERATIONS

NO. 4A TOLL

SC 101-1

BELL TELEPHONE LABORATORIES, INC.
PRINTED IN U. S. A.
ORDER AS BSP ITEM MP-11640

MP-11641

ISSUE	DATE
1	5-29-51

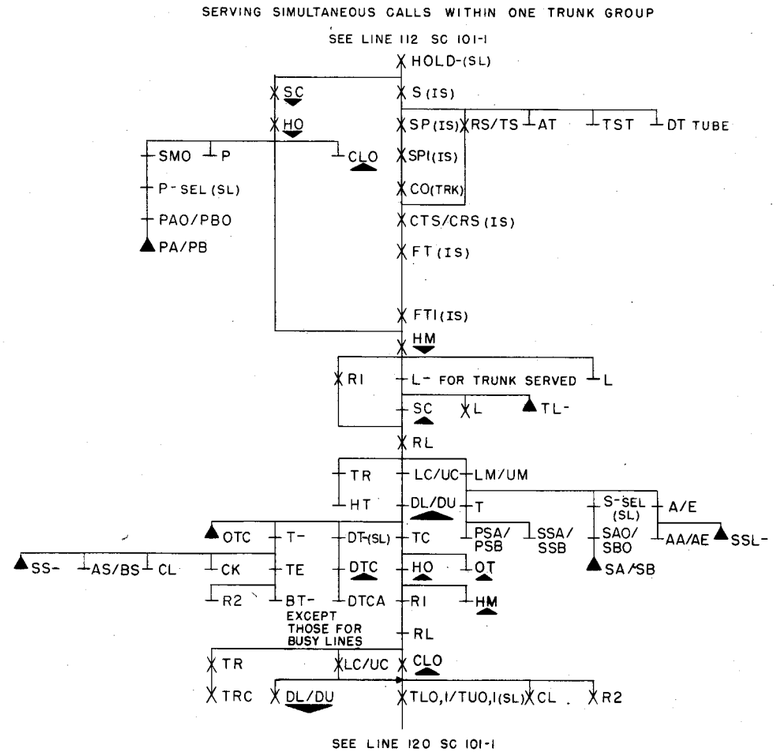

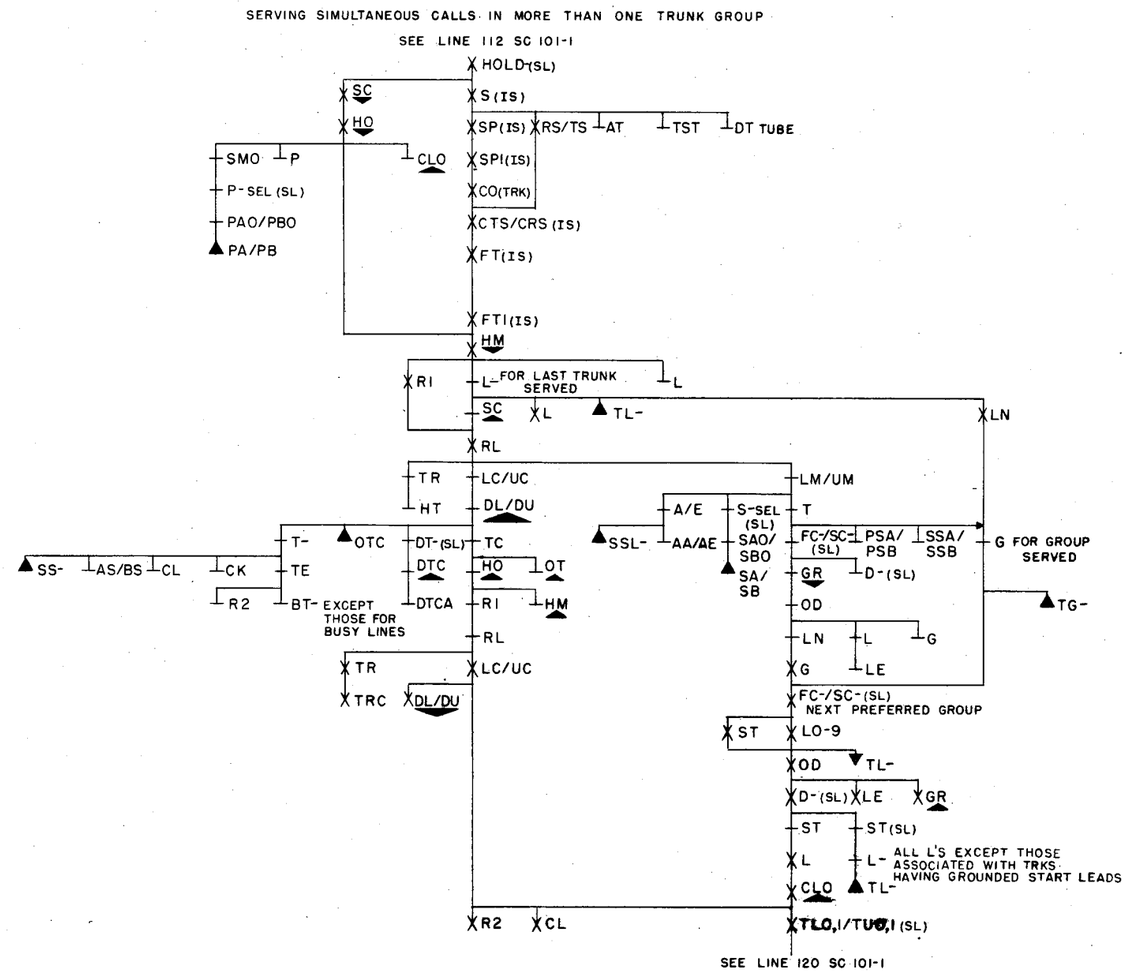

LINK CONTROLLER
SIMULTANEOUS CALLS

NO. 4A TOLL

SC 102-1

BELL TELEPHONE LABORATORIES, INC.
PRINTED IN U. S. A.
ORDER AS BSP ITEM MP-11641

MP-11679

ISSUE	1	1-5-54	2	3-8-54
DATE	8-15-51	8-10-53		

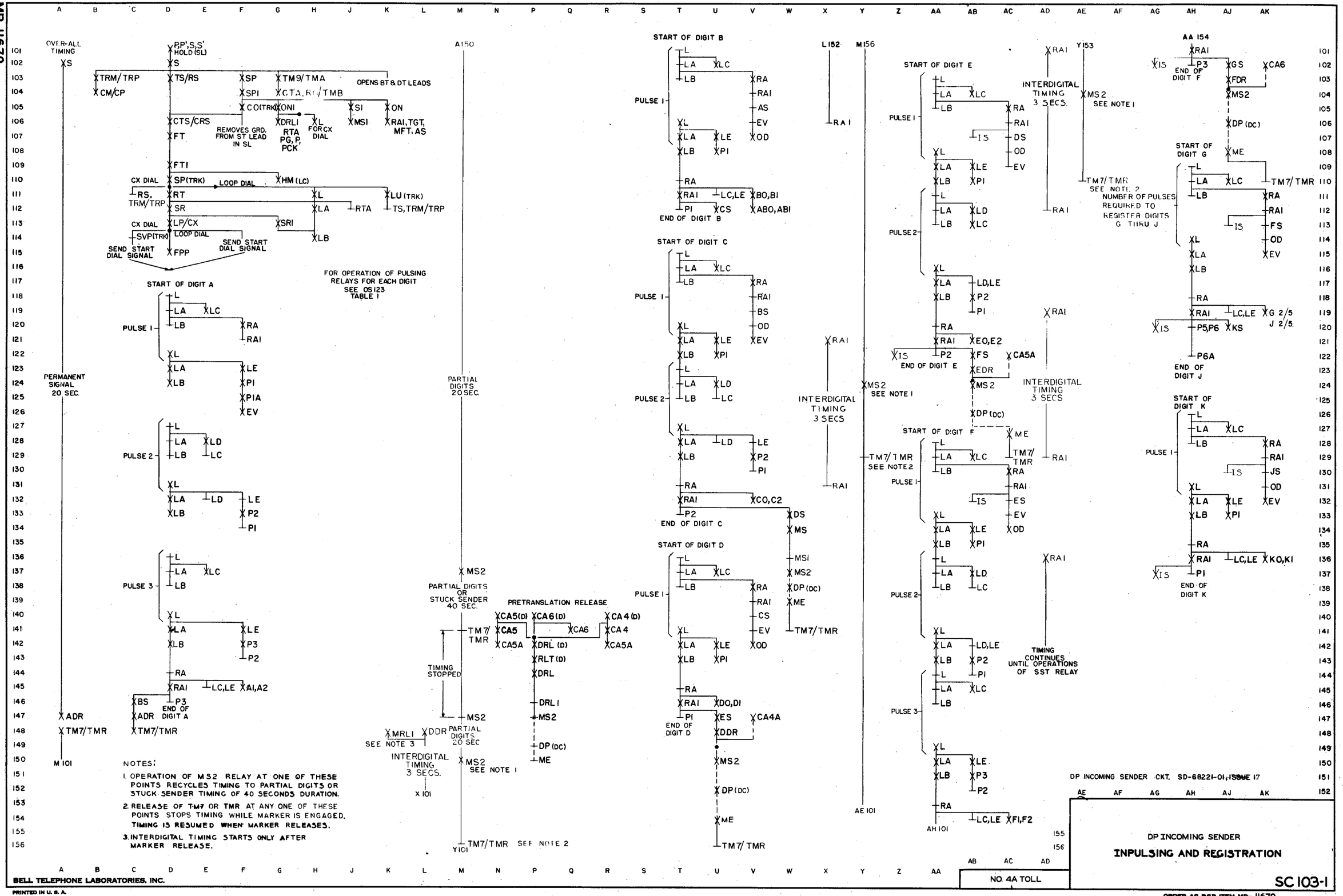

NOTES:

1. OPERATION OF MS2 RELAY AT ONE OF THESE POINTS RECYCLES TIMING TO PARTIAL DIGITS OR STUCK SENDER TIMING OF 40 SECONDS DURATION.
2. RELEASE OF TM7 OR TMR AT ANY ONE OF THESE POINTS STOPS TIMING WHILE MARKER IS ENGAGED. TIMING IS RESUMED WHEN MARKER RELEASES.
3. INTERDIGITAL TIMING STARTS ONLY AFTER MARKER RELEASE.

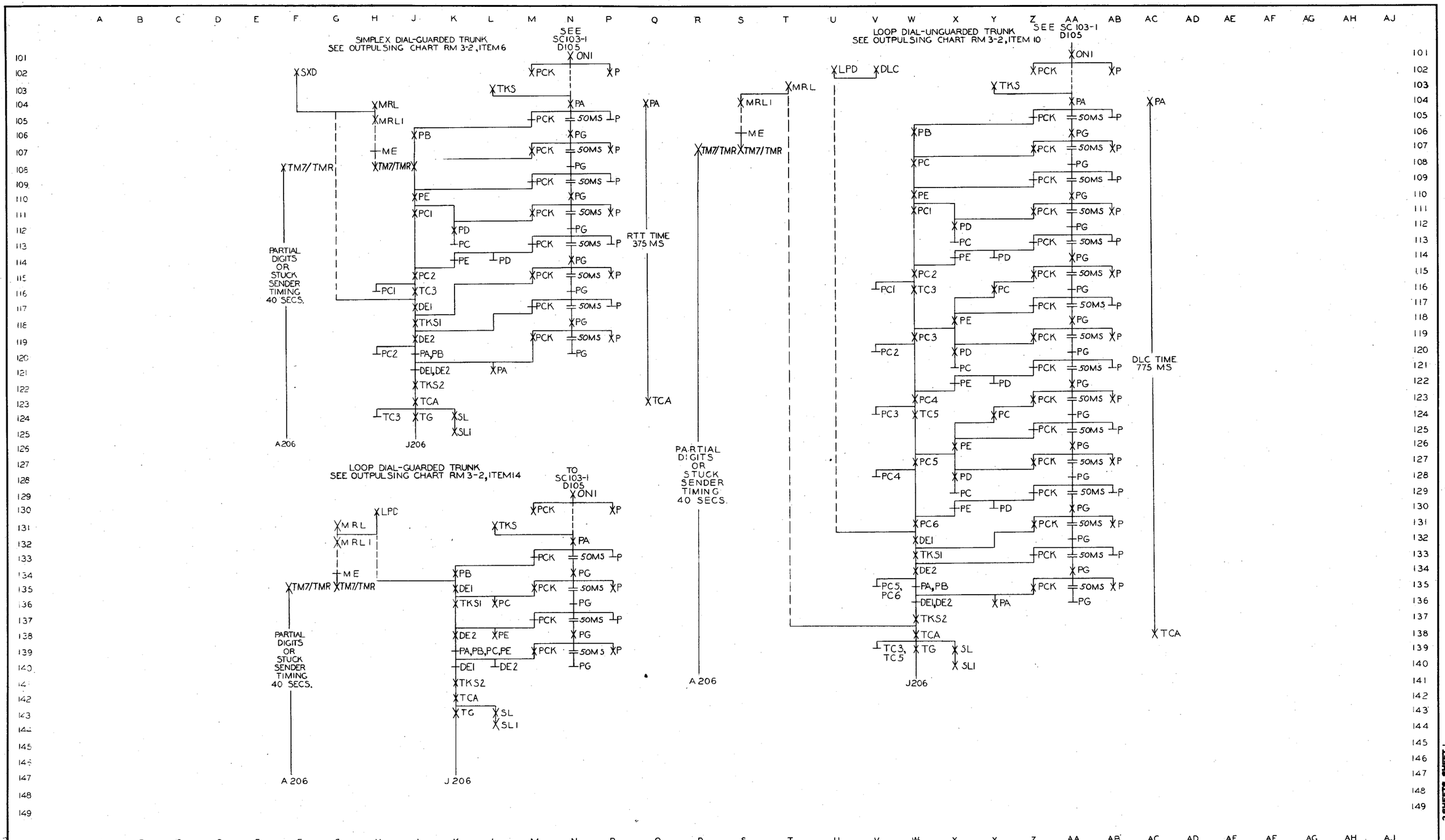

DP INCOMING SENDER

LOOP AND SIMPLEX OUTPULSING AND RELEASE

SC104-1

2 SHEETS, SHEET 1

NO. 4A TOLL

ORDER AS BSP ITEM MP-11680

BELL TELEPHONE LABORATORIES, INC.

PRINTED IN U. S. A.

MP-11680

2 SHEETS, SHEET 1

ISSUE	1	2
DATE	8-19-59	8-11-59

MP-11680 2 SHEETS, SHEET 2

ISSUE	DATE
1	8-15-67
2	8-15-69

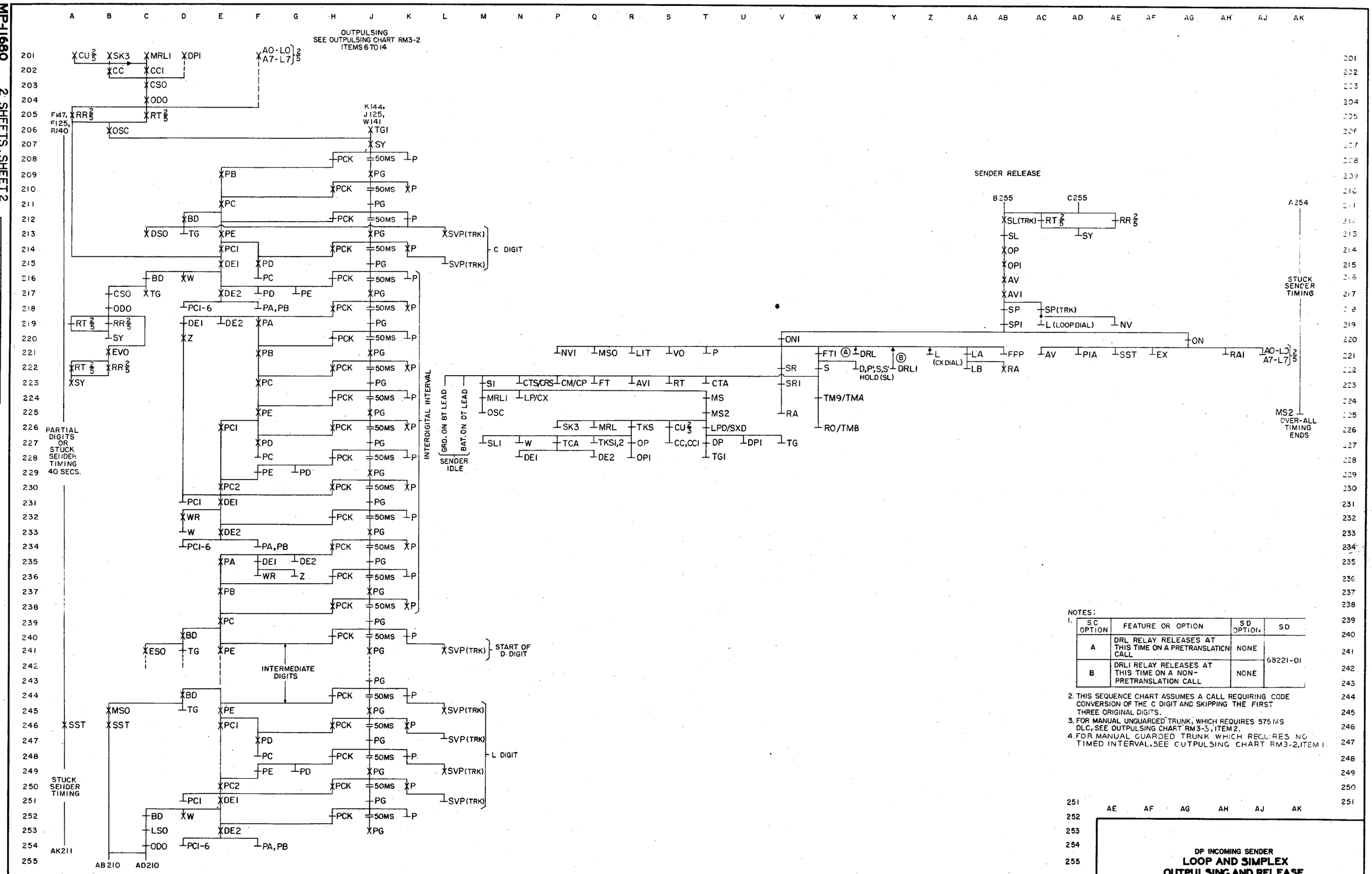

NOTES:

1.

SC OPTION	FEATURE OR OPTION	SD OPTION	SD
A	DRL RELAY RELEASES AT THIS TIME ON A PRETRANSLATION CALL	NONE	68221-01
B	DRLI RELAY RELEASES AT THIS TIME ON A NON-PRETRANSLATION CALL	NONE	

2. THIS SEQUENCE CHART ASSUMES A CALL REQUIRING CODE CONVERSION OF THE C DIGIT AND SKIPPING THE FIRST THREE ORIGINAL DIGITS.
3. FOR MANUAL UNGUARDED TRUNK, WHICH REQUIRES 575 MS DLC, SEE OUTPULSING CHART RM3-3, ITEM 2.
4. FOR MANUAL GUARDED TRUNK WHICH REQUIRES NO TIMED INTERVAL, SEE OUTPULSING CHART RM3-2, ITEM 1.

DP INCOMING SENDER
LOOP AND SIMPLEX OUTPULSING AND RELEASE

NO. 4A TOLL

2 SHEETS, SHEET 2

SC104-1

BELL TELEPHONE LABORATORIES, INC.
PRINTED IN U. S. A.
ORDER AS BSP ITEM MP-11680

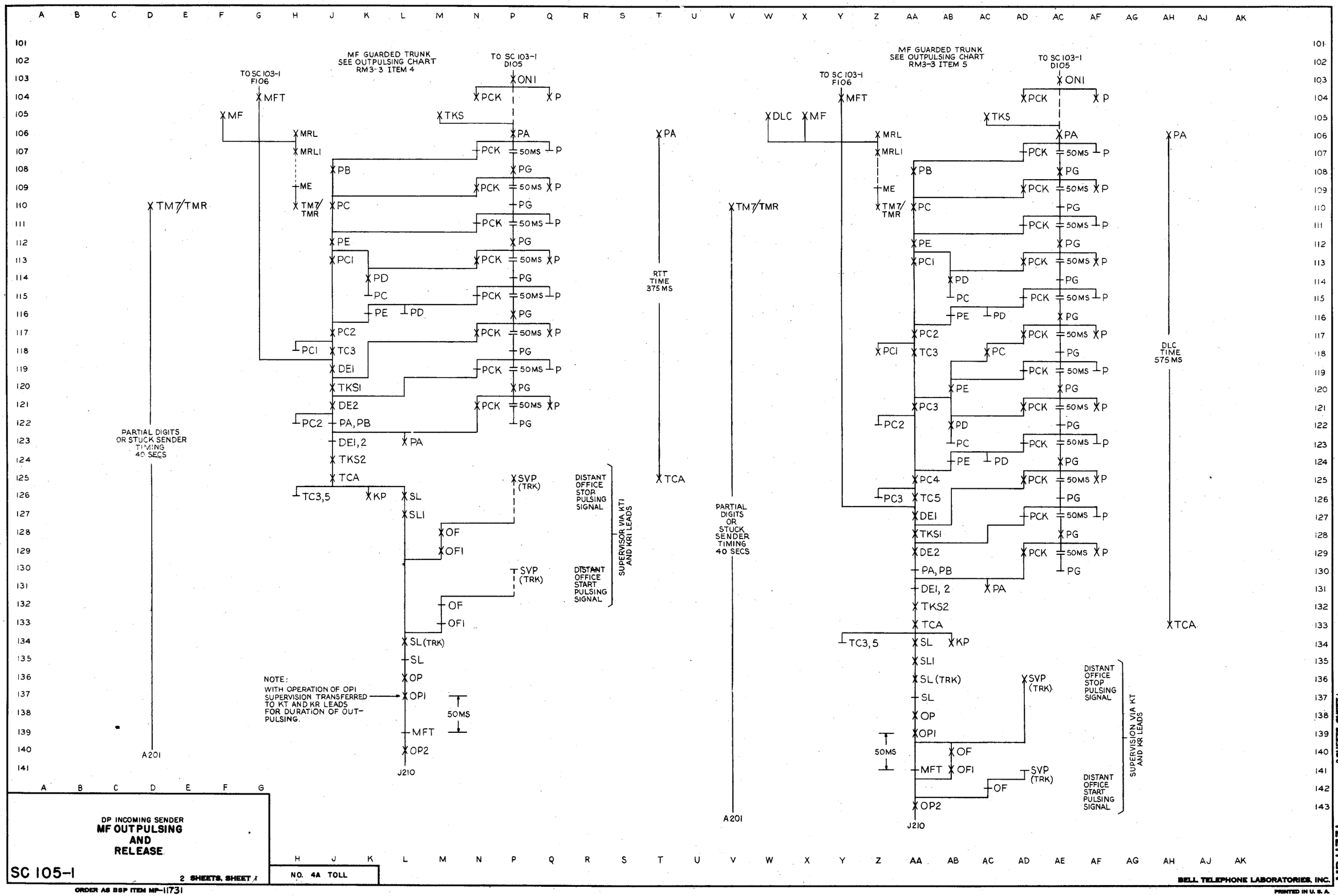

DP INCOMING SENDER
MF OUTPULSING AND RELEASE

SC 105-1

2 SHEETS, SHEET 1

NO. 4A TOLL

ORDER AS BSP ITEM MP-11731

BELL TELEPHONE LABORATORIES, INC.

PRINTED IN U. S. A.

MP-11731

ISSUE	1	R.S.M.	B	G.P.S.
DATE		11-28-51		8-14-53

DATE	ISSUE		
11-28-51	1	A.E.B.	
8-14-63	2	A.E.B.	

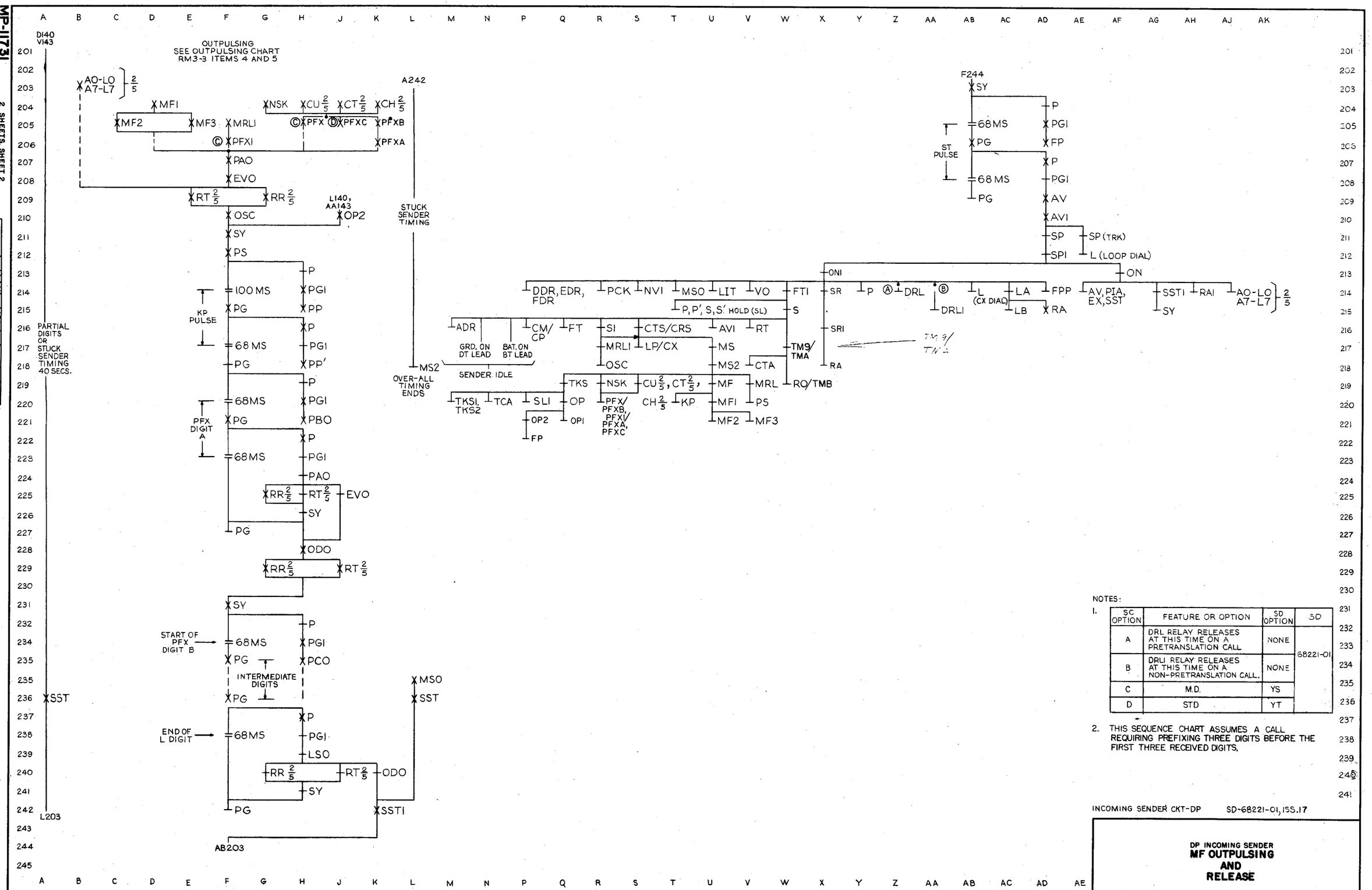

NOTES:

1.

SC OPTION	FEATURE OR OPTION	SD OPTION	SD
A	DRL RELAY RELEASES AT THIS TIME ON A PRETRANSLATION CALL	NONE	68221-01
B	DRLI RELAY RELEASES AT THIS TIME ON A NON-PRETRANSLATION CALL.	NONE	
C	M.D.	YS	
D	STD	YT	

2. THIS SEQUENCE CHART ASSUMES A CALL REQUIRING PREFIXING THREE DIGITS BEFORE THE FIRST THREE RECEIVED DIGITS.

INCOMING SENDER CKT-DP SD-68221-01, ISS.17

DP INCOMING SENDER
MF OUTPULSING AND RELEASE

NO. 4A TOLL

2 SHEETS, SHEET 2

SC 105-1

MP-11732

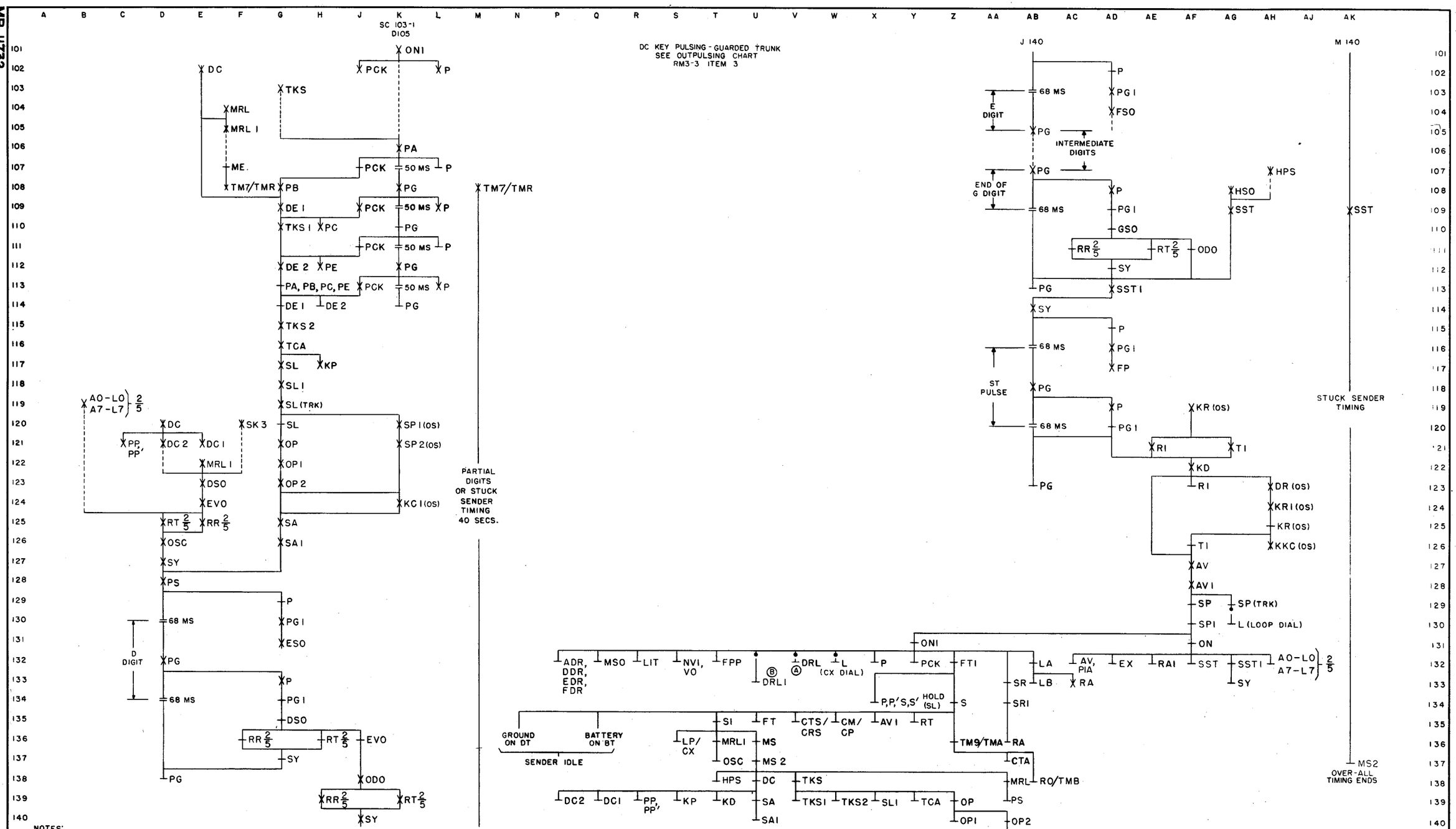

NOTES:

1.

SC OPTION	FEATURE OR OPTION	SD OPTION	SD
A	DRL RELAY RELEASES AT THIS TIME ON A PRETRANSLATION CALL	NONE	68221-01
B	DRL1 RELAY RELEASES AT THIS TIME ON A NON-PRETRANSLATION CALL	NONE	68221-01

INCOMING SENDER CKT. DP SD-68221-01, ISS. 17
OUTGOING SENDER CKT. SD-68018-01, ISS. 25

AF AG AH AJ AK

DP INCOMING SENDER
DC OUTPULSING AND RELEASE

SC 106-1

NO 4A TOLL

ISSUE	1	2
DATE	11-22-51	8-10-53

BELL TELEPHONE LABORATORIES, INC.

PRINTED IN U. S. A.

ORDER AS BSP ITEM MP-11732

MP-11739

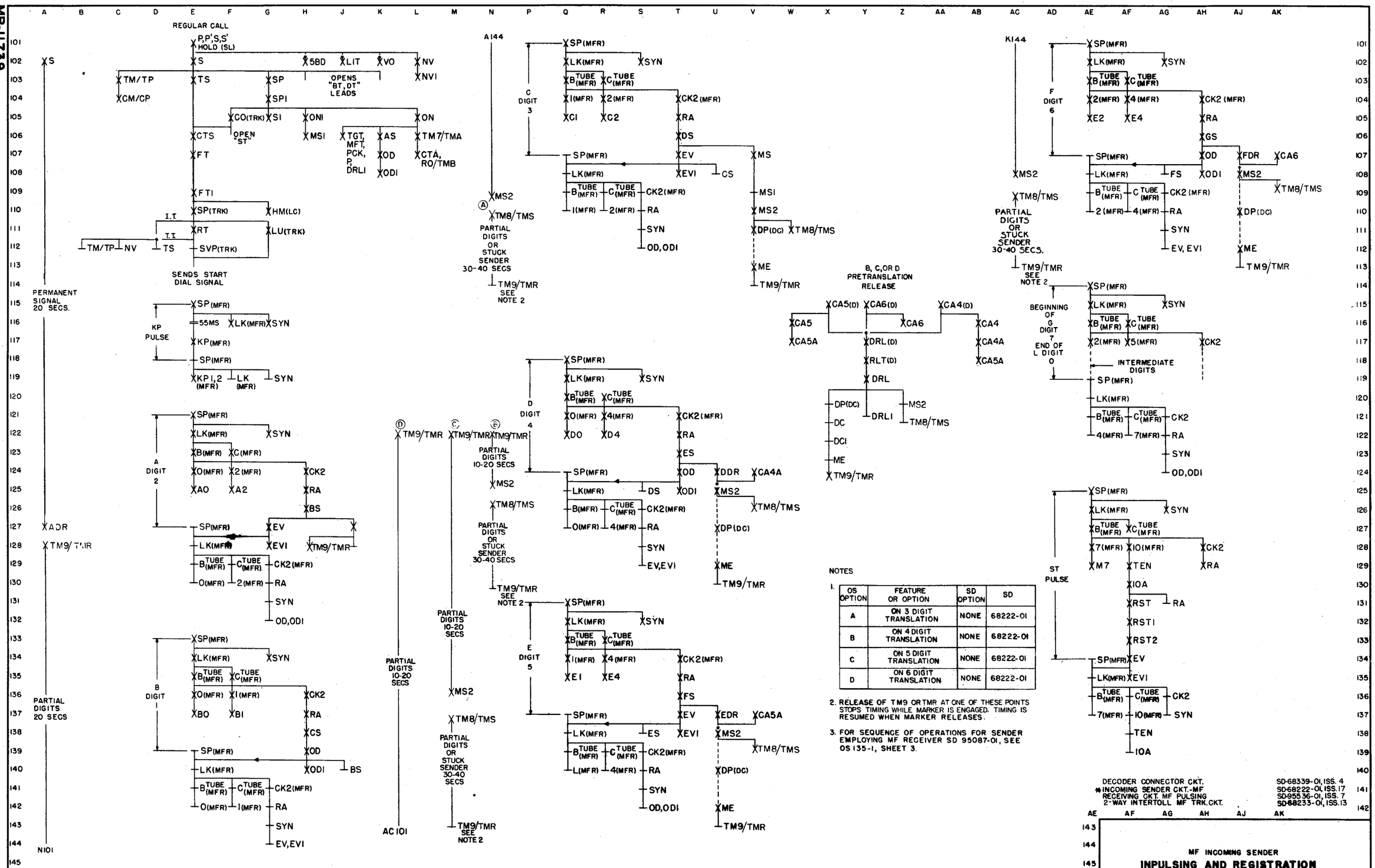

OS OPTION	FEATURE OR OPTION	SD OPTION	SD
A	ON 3 DIGIT TRANSLATION	NONE	68222-01
B	ON 4 DIGIT TRANSLATION	NONE	68222-01
C	ON 5 DIGIT TRANSLATION	NONE	68222-01
D	ON 6 DIGIT TRANSLATION	NONE	68222-01

ISSUE	DATE
1	12-14-67
2	6-16-69

NOTES:

1.

SC OPTION	FEATURE OR OPTION	SD OPTION	SD
A	DRL RELAY RELEASE AT THIS TIME ON A PRETRANSLATION CALL	NONE	68222-01
B	DRLI RELAY RELEASE AT THIS TIME ON A NON-PRETRANSLATION CALL	NONE	68222-01

2. FOR MANUAL UNGUARDED TRUNK WHICH REQUIRES 575 MS DLC, SEE OUTPULSING CHART RM 3-3, ITEM 2.

3. FOR MANUAL GUARDED TRUNK WHICH REQUIRES NO TIMED INTERVAL, SEE OUTPULSING CHART RM 3-3, ITEM 1.

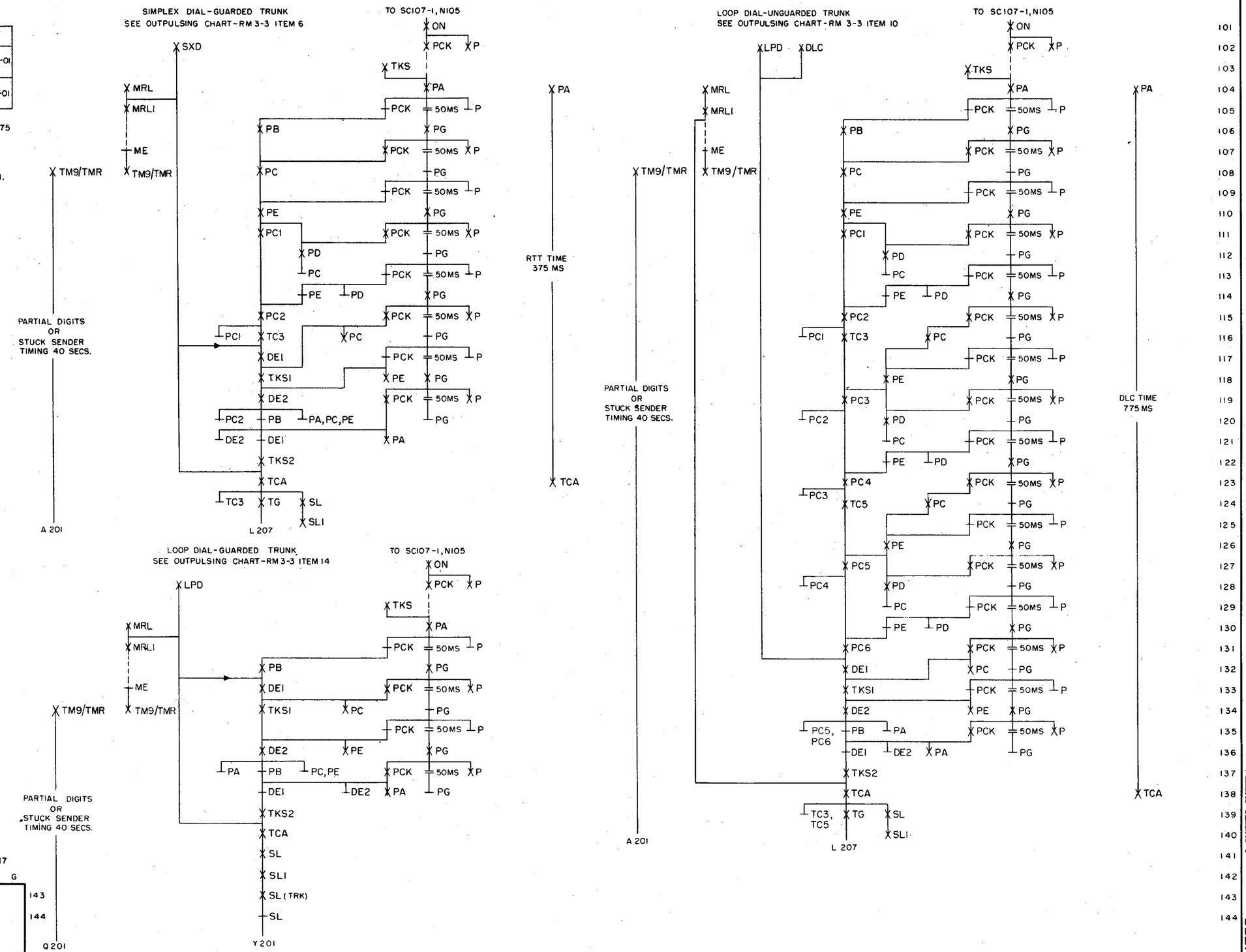

MF INCOMING SENDER
LOOP AND SIMPLEX OUTPULSING OR RELEASE

SC 108-1

2 SHEETS, SHEET 1

NO. 4A TOLL

ORDER AS BSP ITEM MP-11733

BELL TELEPHONE LABORATORIES, INC.

PRINTED IN U. S. A.

MP-11733

2 SHEETS, SHEET 1

ISSUE	1	2
DATE	11-19-57	8-13-59

MP-11733

2 SHEETS, SHEET 2

ISSUE		
DATE	1	4-2-4 R.R.R. 11-19-51
	2	1955 Sec. 8-15-53

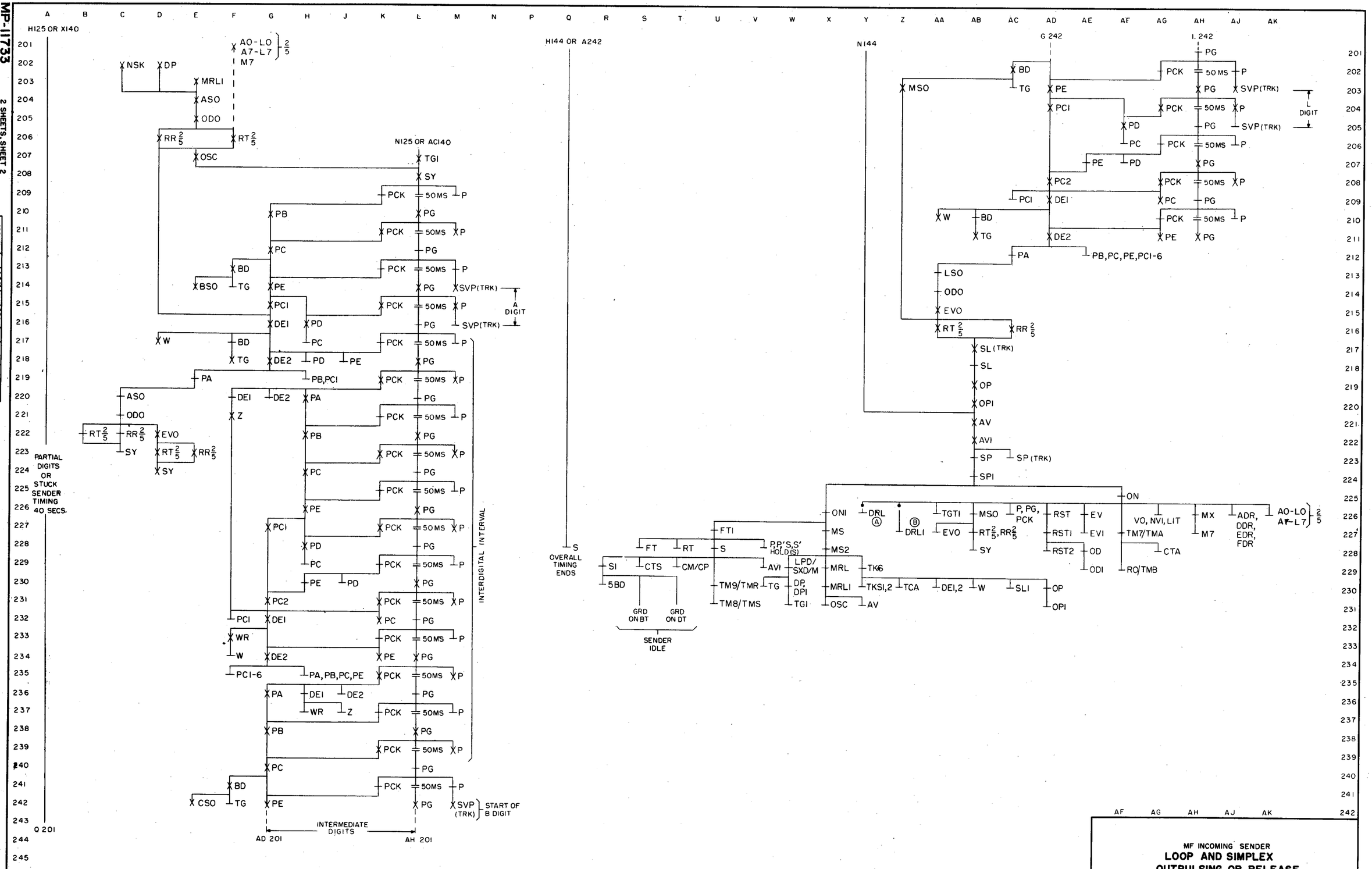

MF INCOMING SENDER
LOOP AND SIMPLEX OUTPULSING OR RELEASE

NO. 4A TOLL

2 SHEETS, SHEET 2

SC 108-1

BELL TELEPHONE LABORATORIES, INC.

PRINTED IN U. S. A.

ORDER AS BSP ITEM MP-11733

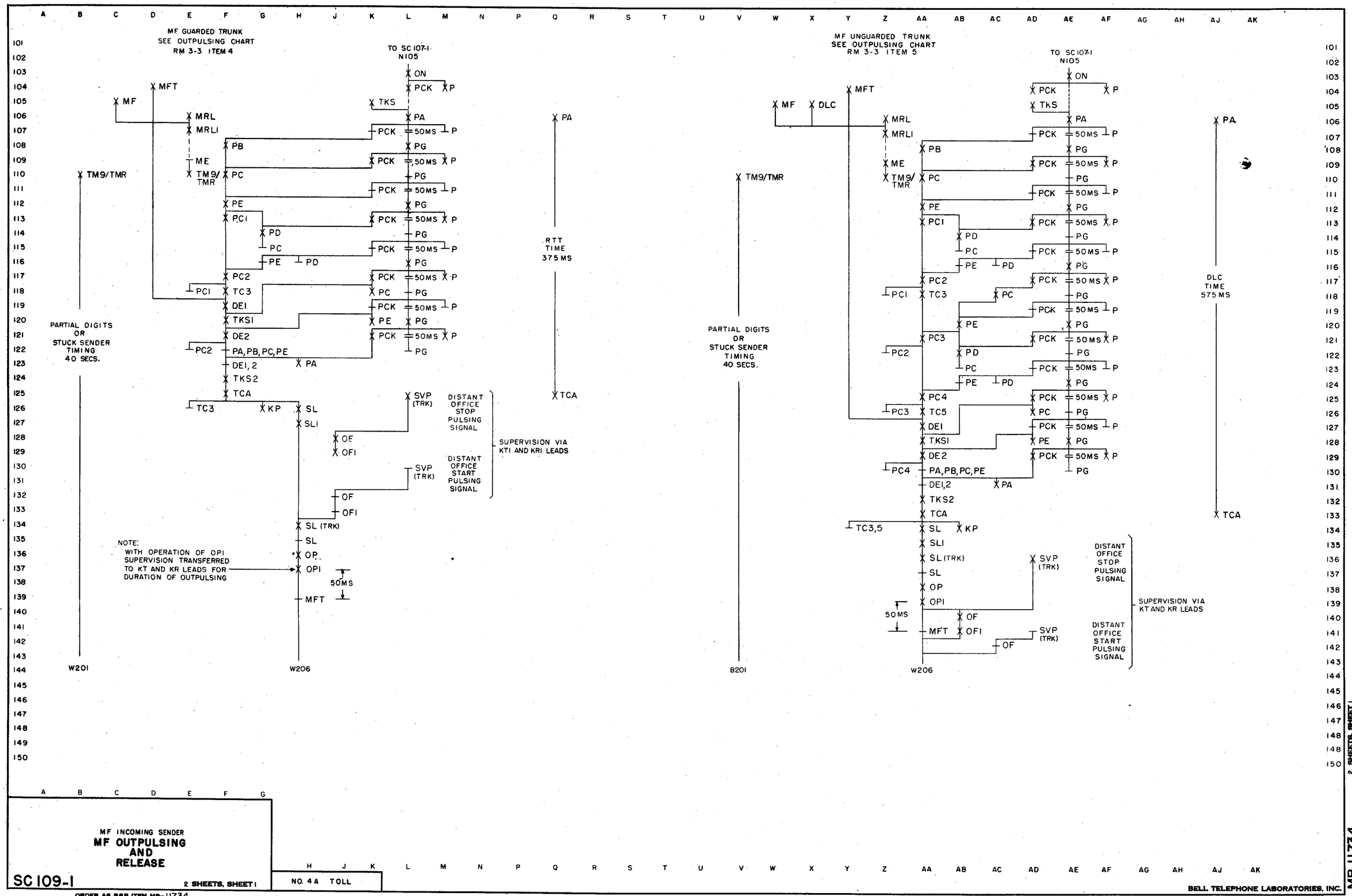

MF INCOMING SENDER

MF OUTPULSING AND RELEASE

SC 109-1

2 SHEETS, SHEET 1

NO. 4A TOLL

ORDER AS BSP ITEM MP-11734

BELL TELEPHONE LABORATORIES, INC.

MP-11734

PRINTED IN U. S. A.

MP-11734

2 SHEETS, SHEET 2

ISSUE		
DATE	1	2
11-28-51	8-8-56	7-29-59

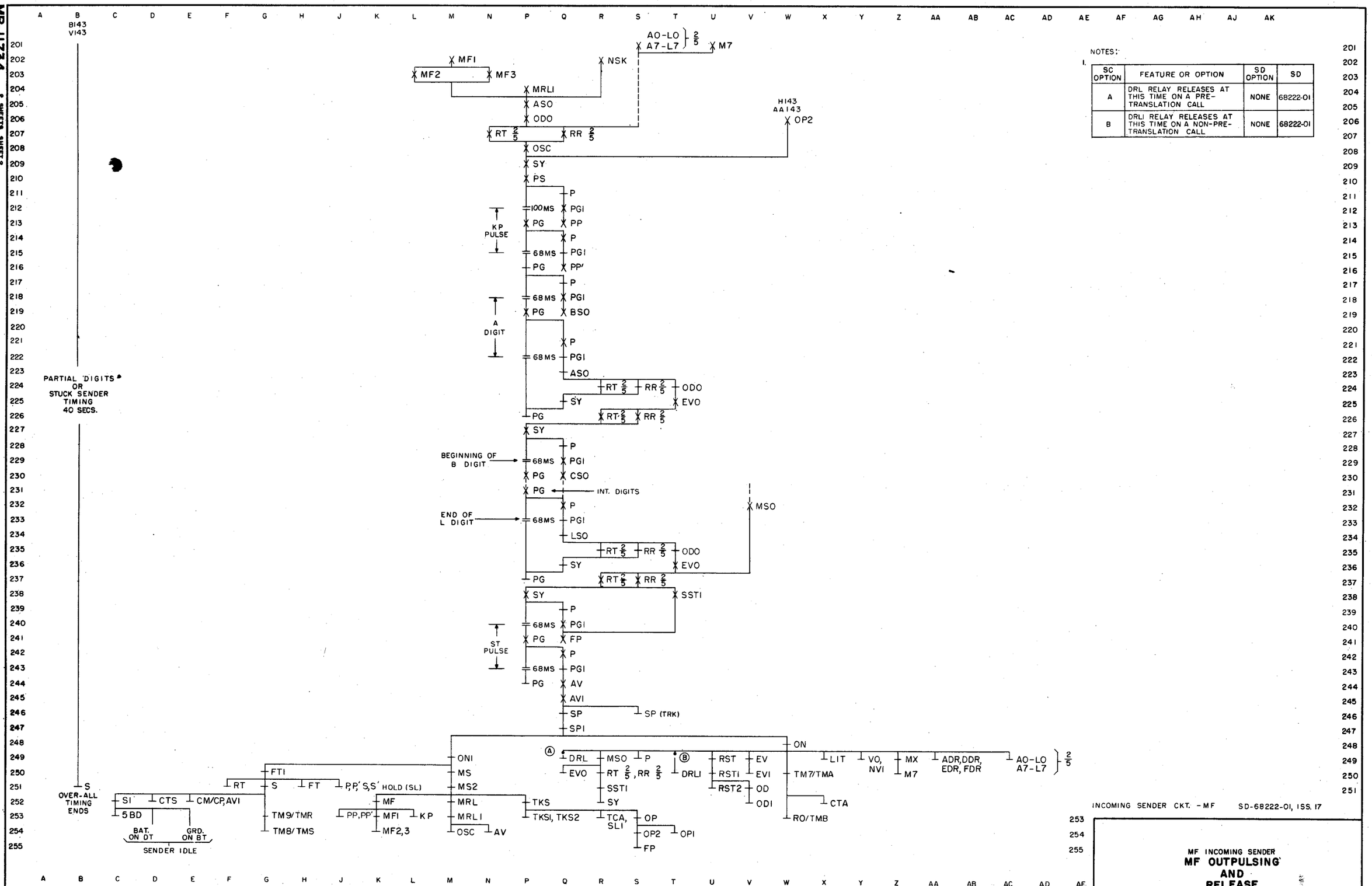

NOTES:

1.

SC OPTION	FEATURE OR OPTION	SD OPTION	SD
A	DRL RELAY RELEASES AT THIS TIME ON A PRE-TRANSLATION CALL	NONE	68222-01
B	DRLI RELAY RELEASES AT THIS TIME ON A NON-PRE-TRANSLATION CALL	NONE	68222-01

INCOMING SENDER CKT. - MF SD-68222-01, ISS. 17

MF INCOMING SENDER
MF OUTPULSING AND RELEASE

2 SHEETS, SHEET 2

SC 109-1

NO. 4A TOLL

BELL TELEPHONE LABORATORIES, INC.

PRINTED IN U. S. A.

ORDER AS BSP ITEM MP-11734

MP-11735

ISSUE	DATE
1	11-26-69
2	8-19-75

DC KEY PULSING - GUARDED TRUNK
(SEE OUTPULSING CHART RM3-3 ITEM 3)

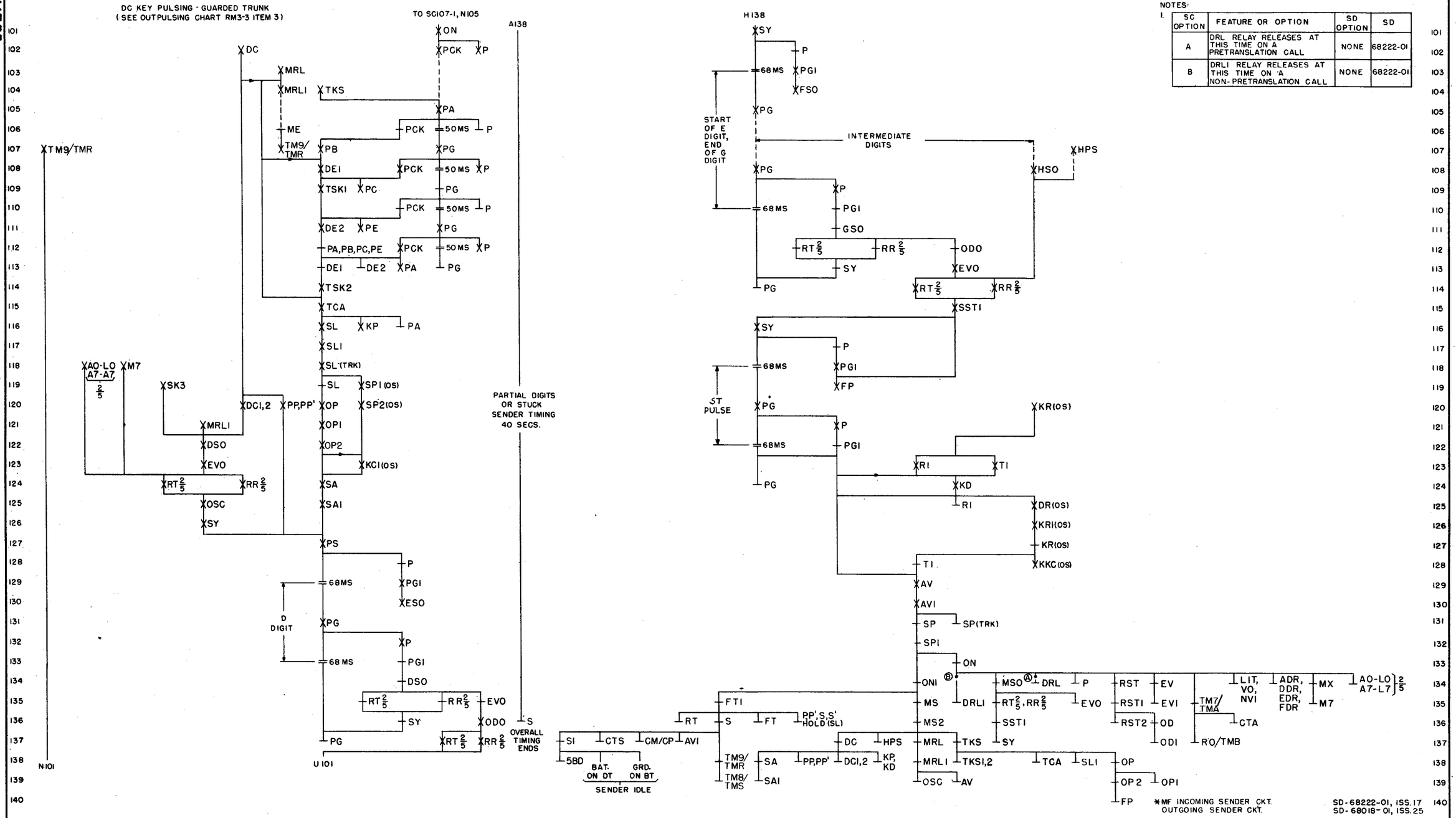

NOTES:
1.

SC OPTION	FEATURE OR OPTION	SD OPTION	SD
A	DRL RELAY RELEASES AT THIS TIME ON A PRETRANSLATION CALL	NONE	68222-01
B	DRL1 RELAY RELEASES AT THIS TIME ON A NON-PRETRANSLATION CALL	NONE	68222-01

*MF INCOMING SENDER CKT.
OUTGOING SENDER CKT.

SD-68222-01, ISS. 17
SD-68018-01, ISS. 25

MF INCOMING SENDER

DC OUTPULSING AND RELEASE

NO. 4A TOLL

SC110-1

BELL TELEPHONE LABORATORIES, INC.
PRINTED IN U. S. A.
ORDER AS BSP ITEM MP-11735

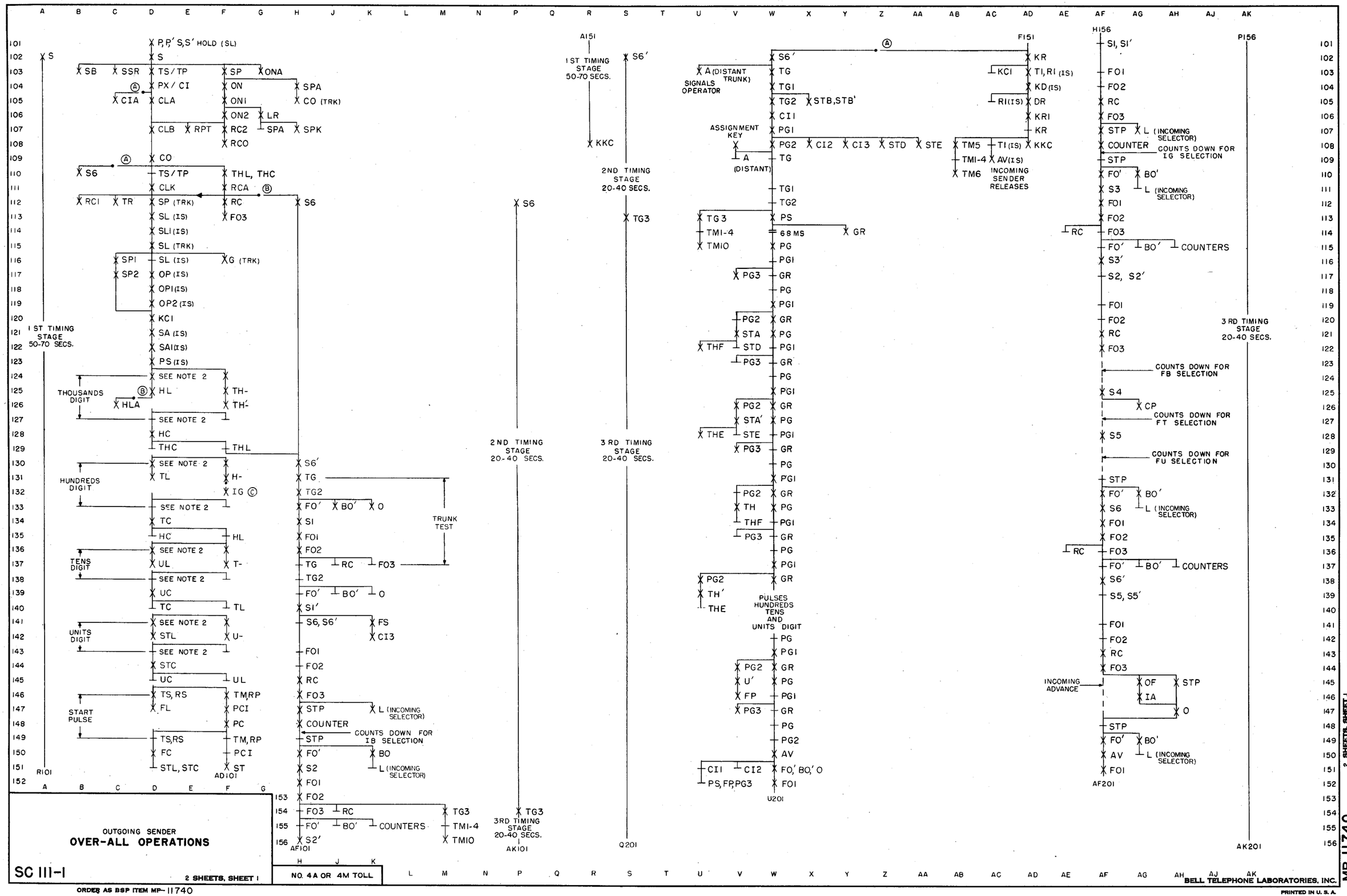
P, P′ S, S′ HOLD (SL)
1 ST TIMING STAGE 50-70 SECS.
THOUSANDS DIGIT
HUNDREDS DIGIT
TENS DIGIT
UNITS DIGIT
START PULSE
SEE NOTE 2
COUNTS DOWN FOR IB SELECTION
TRUNK TEST
COUNTERS
R101
AD101
AF101
A151
2ND TIMING STAGE 20-40 SECS.
3RD TIMING STAGE 20-40 SECS.
AK101
Q201
SIGNALS OPERATOR
A (DISTANT TRUNK)
ASSIGNMENT KEY
A (DISTANT)
INCOMING SENDER RELEASES
PULSES HUNDREDS TENS AND UNITS DIGIT
U201
F151
H156
AF201
P156
AK201
COUNTS DOWN FOR IG SELECTION
COUNTS DOWN FOR FB SELECTION
COUNTS DOWN FOR FT SELECTION
COUNTS DOWN FOR FU SELECTION
INCOMING ADVANCE
OUTGOING SENDER
OVER-ALL OPERATIONS
SC 111-1
2 SHEETS, SHEET 1
NO. 4A OR 4M TOLL
ORDER AS BSP ITEM MP-11740
BELL TELEPHONE LABORATORIES, INC.
PRINTED IN U. S. A.
MP-11740
2 SHEETS, SHEET 1
ISSUE 1 2
DATE 11-28-51 12-16-53

MP-11740 2 SHEETS, SHEET 2

ISSUE	1	2
DATE	11-28-51	12-16-53

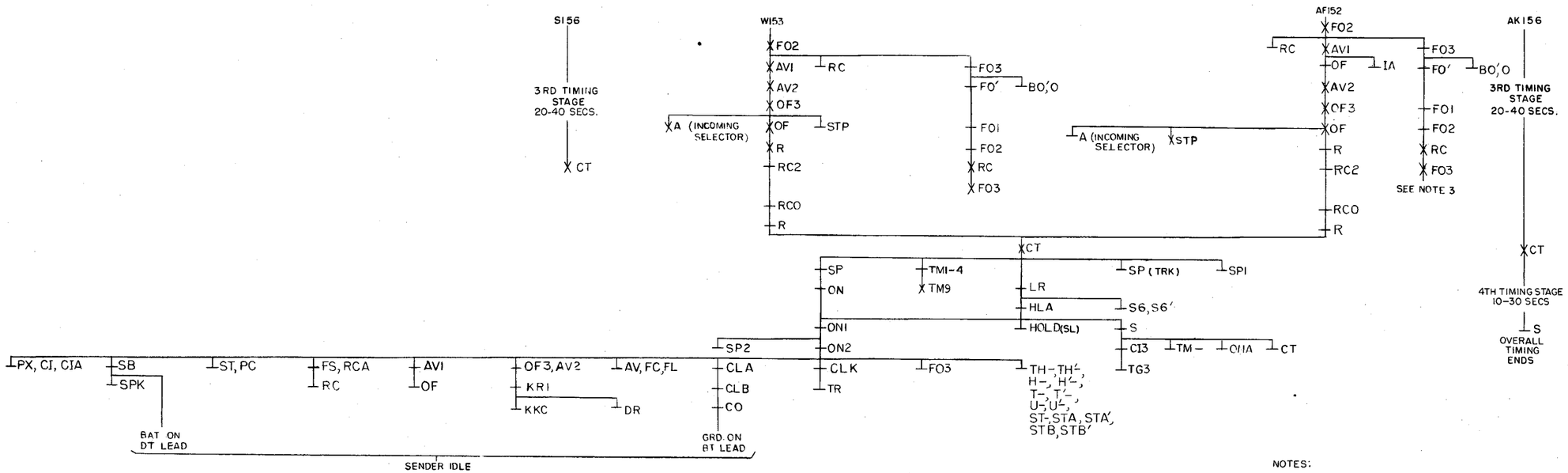

NOTES:

1.

SC OPTION	FEATURE OR OPTION	SD OPTION	SD
A	FOR P C I CALL		68018-01
B	FOR REVERTIVE TYPE CALL		68018-01
C	WHEN HUNDREDS DIGIT ON REVERTIVE CALL IS OVER 5		68018-01

2. RELAYS TS, TM, TP, ETC. OPERATE AND RELEASE AT START AND END OF PULSE IN ACCORDANCE WITH TABLE A.

3. AN OPTION IS PROVIDED FOR REVERTIVE ONLY TO FORCE THE (OF) RELAY NORMAL SHOULD IT FAIL TO RELEASE ON OPEN CIRCUIT. SEE OS-152-1.

TABLE A
REGISTRATION OF DIGITS

DIGIT	PULSES RECEIVED		PULSING RELAYS						REGISTER RELAYS
			TS	RS	TP	RP	TM	RM	
0	362Ω GRD.		X						NONE
1	0Ω GRD.		X				X		1
2	362Ω BAT.		X		X				2
3	0Ω BAT.		X		X		X		1,2
4	362Ω GRD.	362Ω BAT.	X	X		X			4
5	362Ω GRD.	0Ω GRD.	X	X				X	5
6	0Ω GRD.	0Ω GRD.	X	X			X	X	1,5
7	362Ω BAT.	0Ω GRD.	X	X	X			X	2,5
8	0Ω BAT.	0Ω GRD.	X	X	X		X	X	1,2,5
9	362Ω GRD.	0Ω BAT.	X	X		X		X	4,5
START	0Ω GRD.	362Ω BAT.	X	X		X	X		1,4

X DENOTES RELAY OPERATED.

INCOMING DP SENDER CKT.	SD-68423-01	ISS. 2
INCOMING MF SENDER CKT	SD-68424-01	ISS. 4
INCOMING SENDER CKT.-DP	SD-68221-01,	ISS. 17
INCOMING SENDER CKT.-MF	SD-68222-01,	ISS. 16
OUTGOING SENDER CKT.	SD-68018-01,	ISS. 28
TOLL SWITCHING TRK. CKT.	SD-68326-01,	ISS. 10

OUTGOING SENDER
OVER-ALL OPERATIONS

NO. 4A OR 4M TOLL

2 SHEETS, SHEET 2

SC III-1

MP-11741

ISSUE	1	2
DATE	11-28-51	11-23-55

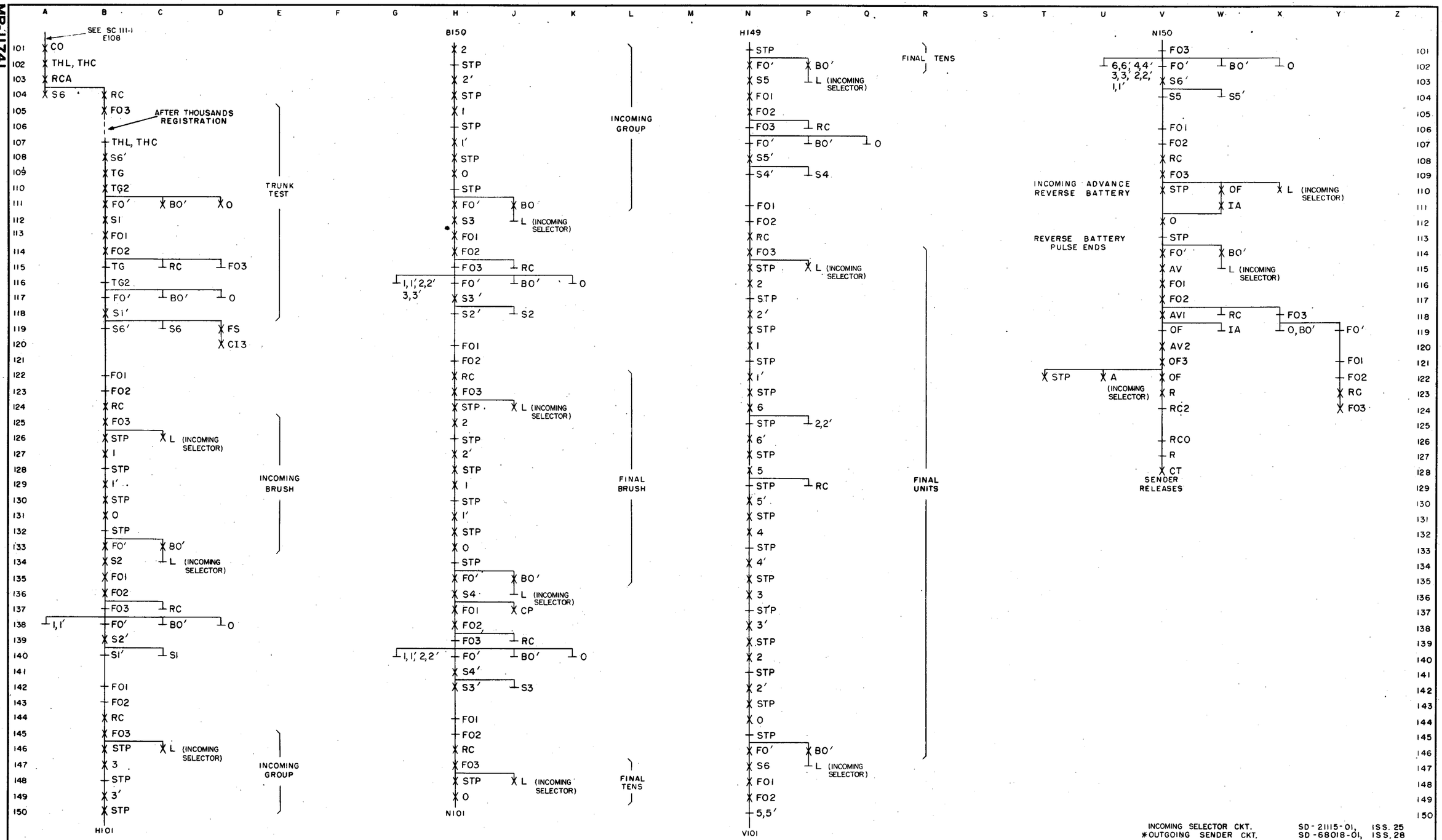

BELL TELEPHONE LABORATORIES, INC.

PRINTED IN U. S. A.

ORDER AS BSP ITEM MP-11741

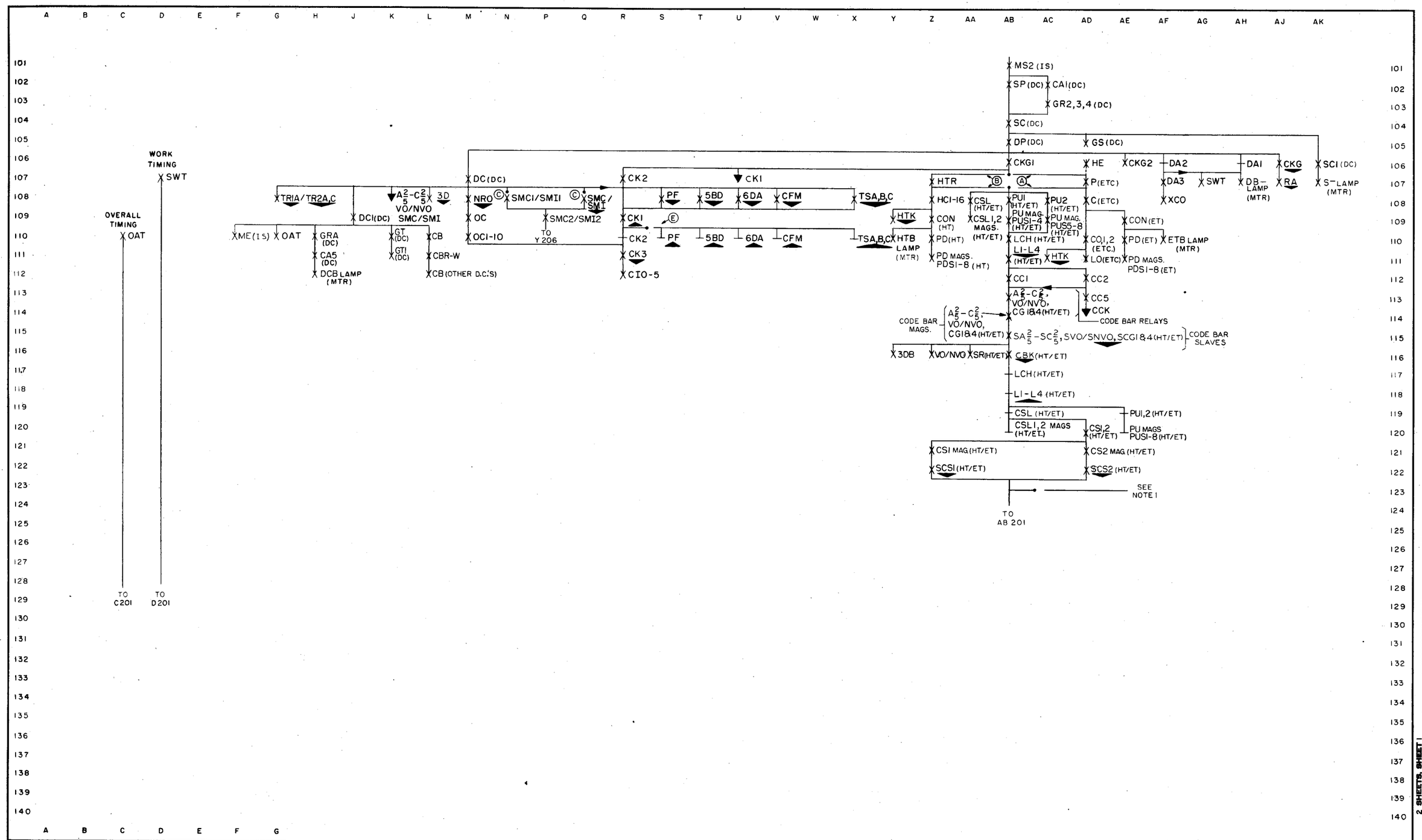

DECODER

OVERALL OPERATIONS FOR A CALL COMPLETED BY 3-DIGIT TRANSLATION

SC 113-1

2 SHEETS, SHEET 1

NO. 4A OR 4M TOLL

ORDER AS BSP ITEM MP-11686

BELL TELEPHONE LABORATORIES, INC.

PRINTED IN U. S. A.

ISSUE	1	2
DATE	9-25-51	10-29-53

2 SHEETS, SHEET 1

MP-11686

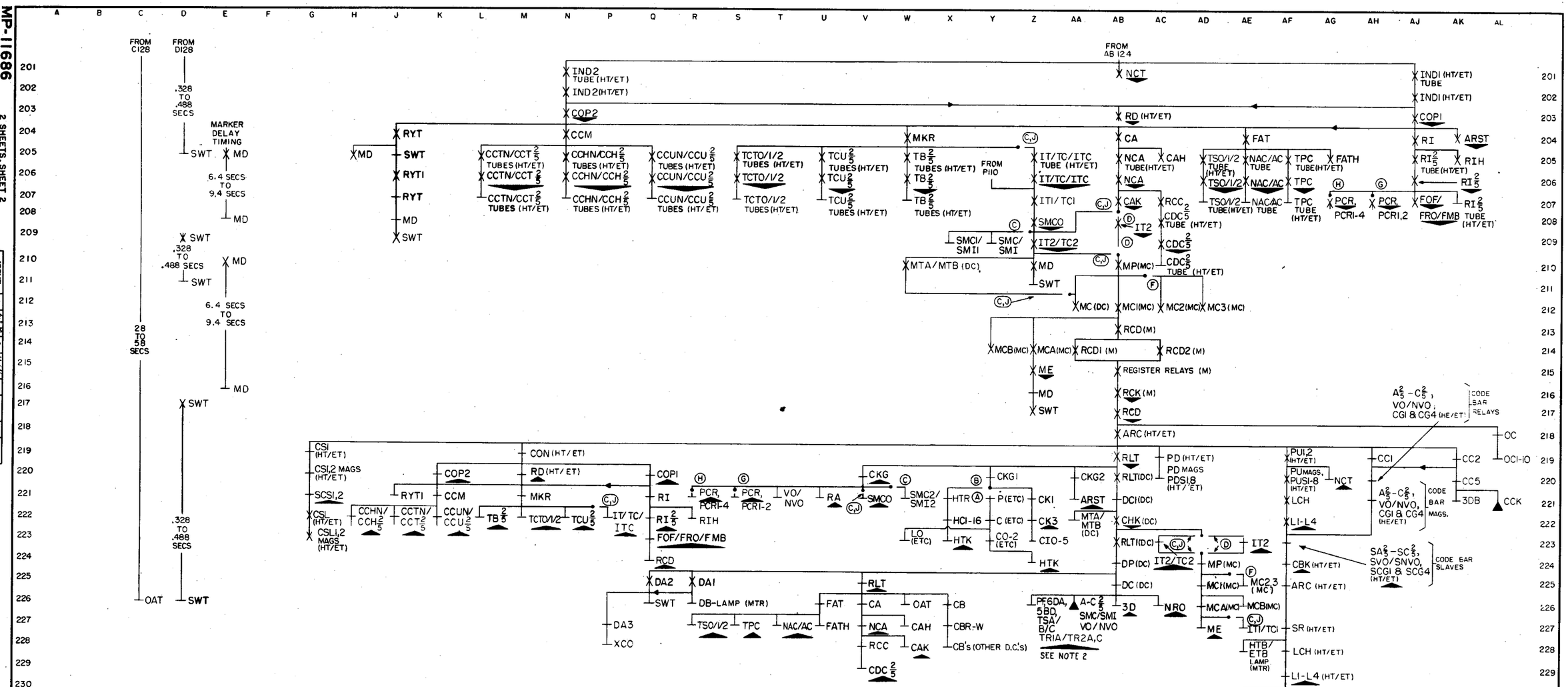

NOTES:

1. A. IF 3D CARD DROPS WITH CA4/5/6 INSTRUCTIONS, SEE SC 114-1
   B. IF 3D CARD DROPS WITH NCA & CC INSTRUCTIONS, SEE SC 117-1
   C. IF 3D CARD DROPS WITH NCA & CR INSTRUCTIONS, SEE SC 118-1 OR SC121-1
   D. IF 3D CARD DROPS WITH NCA & RR INSTRUCTIONS, SEE SC 119-1
2. THESE RELAYS RELEASE HERE IF OPERATED BY SENDER OR DECODER CONN.
3.

SC OPTION	FEATURE OR OPTION	SD OPTION	SD
A	PLUG IN HE JACK AT TROUBLE RECORDER FRAME ALLOWS SEIZURE OF THE EMERGENCY TRANSLATOR	NONE	
B	DECODER NOT PLUGGED BUSY AND THE EMERGENCY TRANSLATOR HAS NOT BEEN SUBSTITUTED	NONE	
C	SEPARATE TRAIN OFFICE	FIG. A	68340-01
D	COMBINED TRAIN OFFICE	FIG. B	
E	THESE RELAYS RELEASE UNLESS GROUNDED BY THE SENDER OR DECODER CONNECTOR	NONE	
F	FOR OFFICES HAVING MORE THAN 6 TRUNK BLOCK CONNECTORS	X & Y	68395-01
G	F. T. BOXES 1-8 PAIRED	FIG. C	68340-01
H	F. T. BOXES 1-16 PAIRED	FIG. D	
J	SEPARATE TRAIN COMBINED OPERATION OFFICE	FIG. E	68340-01

INCOMING SENDER M.F. 4M	SD-68424-01, ISS. 4
INCOMING SENDER D.P. 4M	SD-68423-01, ISS. 2
CARD TRANSLATOR CKT.	SD-68342-01, ISS. 6
* DECODER CKT.	SD-68340-01, ISS. 8
DECODER CONNECTOR CKT.	SD-68339-01, ISS. 4
INCOMING SENDER CKT. D.P. 4A	SD-68221-01, ISS. 14
INCOMING SENDER CKT. M.F. 4A	SD-68222-01, ISS. 16
MARKER CKT.	SD-68388-01, ISS. 7
MARKER CONNECTOR CKT.	SD-68395-01, ISS. 5
TRANSLATOR CONNECTOR CKT.	SD-68341-01, ISS. 6
MISC. CKT. TROUBLE RECORDER	SD-68392-01, ISS. 5

ISSUE	DATE
1	9-25-71
2	10-26-73

DECODER

OVERALL OPERATIONS FOR A CALL COMPLETED BY 3-DIGIT TRANSLATION

NO. 4A OR 4M TOLL

2 SHEETS, SHEET 2

SC 113-1

MP-11742

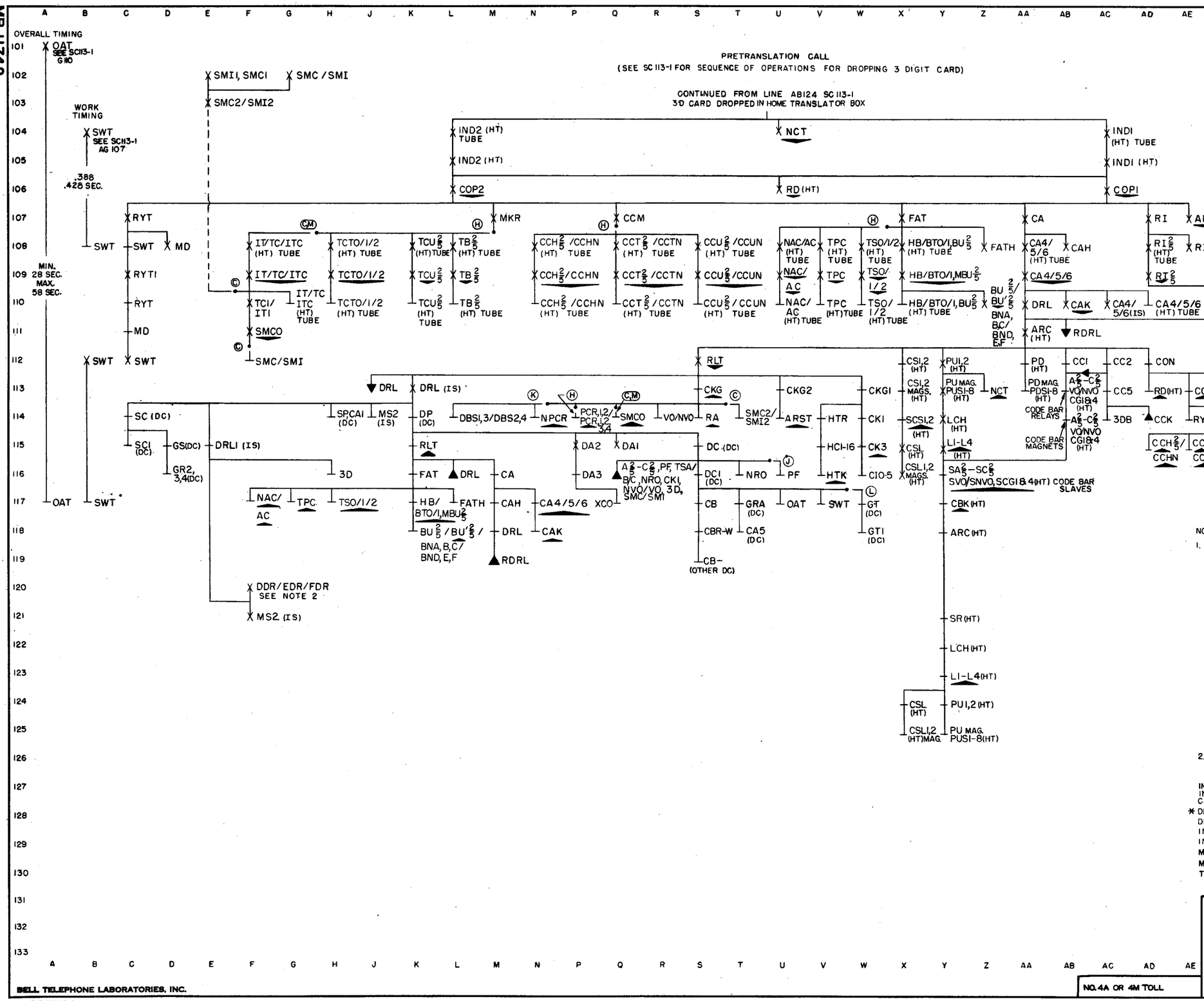

NOTES:

1.

SC OPTION	FEATURE OR OPTION	SD OPTION	SD
C	SEPARATE TRAIN OFFICE	FIG. A	68340-01
H	PRINCIPLE CITY ROUTING (INDICATED BY OPERATION OF RI1/RI2/RI4 3D CARD)	NONE	
K	NO PRINCIPLE CITY ROUTING (INDICATED BY OPERATION OF RI0 AND RI7 3D CARD)	NONE	
J	PF RELAY OPERATED WHEN DECODER IS CONNECTED TO SENDERS WITH GROUNDED PF LEADS	R	68221-01 68221-01
		Z	68423-01 68424-01
L	GT & GTI WILL BE RELEASED IF NO OTHER DECODER CONN. ARE AWAITING A DECODER	NONE	
M	SEPARATE TRAIN COMBINED OPERATION OFFICE	FIG. E	68340-01

2. A NEW DECODER WILL BE SEIZED WHEN, ON A COME AGAIN 4,5, OR 6 CALL, SUFFICIENT DIGITS ARE AVAILABLE IN THE SENDER. SEE SC 115-1.

INCOMING SENDER CKT.– MF 4M	SD – 68424-01	ISS.4
INCOMING SENDER CKT. – DP 4M	SD – 68423-01	ISS.2
CARD TRANSLATOR CKT.	SD – 68342-01,	ISS.6
* DECODER CKT.	SD – 68340-01,	ISS.8
DECODER CONNECTOR CKT.	SD – 68339-01,	ISS4
INCOMING SENDER. CKT. – DP 4A	SD – 68221-01,	ISS.14
INCOMING SENDER CKT. – MF 4A	SD – 68222-01,	ISS.16
MARKER CKT.	SD – 68388-01,	ISS.7
MARKER CONNECTOR CKT.	SD – 68385-01,	ISS.5
TRANSLATOR CONNECTOR CKT.	SD – 68341-01,	ISS.6

ISSUE	DATE
1	11-28-63
2	10-20-65

DECODER
OVERALL OPERATIONS PRETRANSLATION

SC 114-1

NO. 4A OR 4M TOLL

BELL TELEPHONE LABORATORIES, INC.

PRINTED IN U. S. A.

ORDER AS BSP ITEM MP-11742

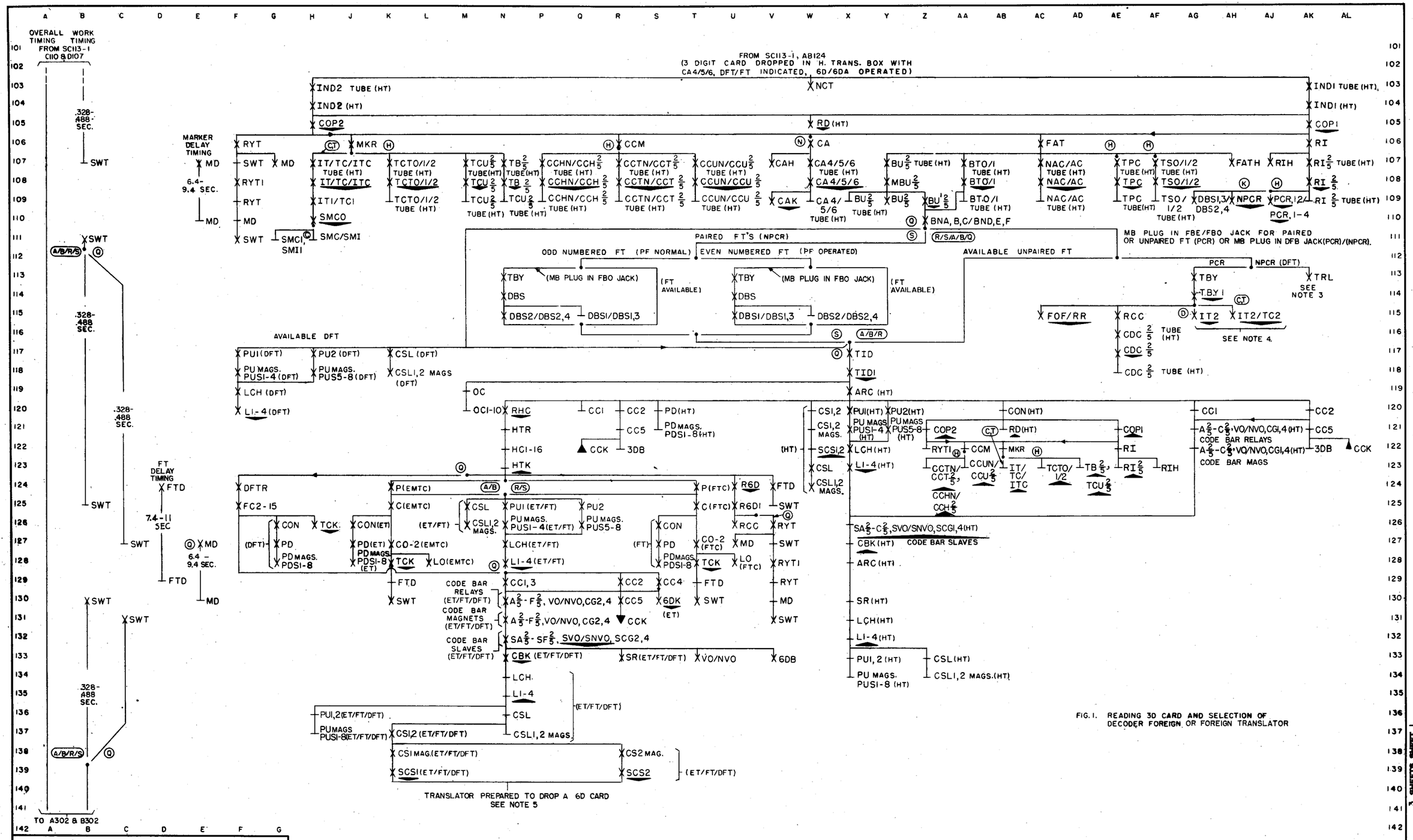

FIG. 1. READING 3D CARD AND SELECTION OF DECODER FOREIGN OR FOREIGN TRANSLATOR

DECODER
OVERALL OPERATIONS FOR A CALL COMPLETED BY 6-DIGIT TRANSLATION
FOF/FRO/FMB ROUTING INSTRUCTION ON A 6D CARD

SC,115-1 — 3 SHEETS, SHEET 1

NO. 4A OR 4M TOLL

ORDER AS BSP ITEM MP-11748

BELL TELEPHONE LABORATORIES, INC.

PRINTED IN U. S. A.

MP-11748

3 SHEETS, SHEET 1

ISSUE	DATE
1	12-17-51
2	10-29-53

ISSUE	DATE	
1	12-17-51	A.E.H. K.E.G.
2	10-29-53	K.E.G.

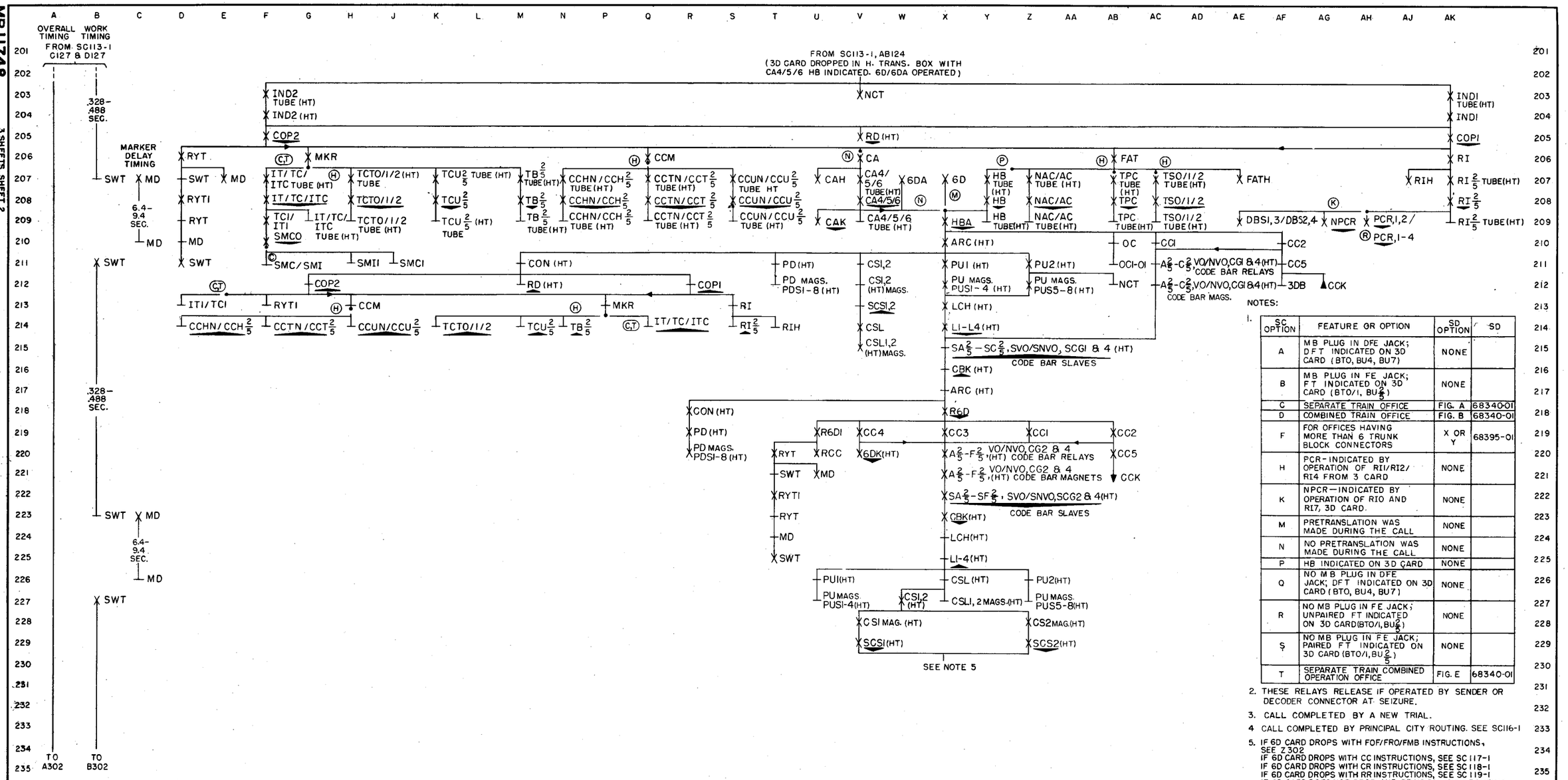

FIG. 2 READING 3D CARD AND PREPARING HOME TRANSLATOR TO DROP A 6D CARD.

NOTES:

1.

SC OPTION	FEATURE OR OPTION	SD OPTION	SD
A	MB PLUG IN DFE JACK; DFT INDICATED ON 3D CARD (BTO, BU4, BU7)	NONE	
B	MB PLUG IN FE JACK; FT INDICATED ON 3D CARD (BTO/1, BU 2/5)	NONE	
C	SEPARATE TRAIN OFFICE	FIG. A	68340-01
D	COMBINED TRAIN OFFICE	FIG. B	68340-01
F	FOR OFFICES HAVING MORE THAN 6 TRUNK BLOCK CONNECTORS	X OR Y	68395-01
H	PCR-INDICATED BY OPERATION OF RI1/RI2/RI4 FROM 3 CARD	NONE	
K	NPCR—INDICATED BY OPERATION OF RIO AND RI7, 3D CARD.	NONE	
M	PRETRANSLATION WAS MADE DURING THE CALL	NONE	
N	NO PRETRANSLATION WAS MADE DURING THE CALL	NONE	
P	HB INDICATED ON 3D CARD	NONE	
Q	NO MB PLUG IN DFE JACK; DFT INDICATED ON 3D CARD (BTO, BU4, BU7)	NONE	
R	NO MB PLUG IN FE JACK; UNPAIRED FT INDICATED ON 3D CARD (BTO/1, BU 2/5)	NONE	
S	NO MB PLUG IN FE JACK; PAIRED FT INDICATED ON 3D CARD (BTO/1, BU 2/5)	NONE	
T	SEPARATE TRAIN COMBINED OPERATION OFFICE	FIG. E	68340-01

2. THESE RELAYS RELEASE IF OPERATED BY SENDER OR DECODER CONNECTOR AT SEIZURE.
3. CALL COMPLETED BY A NEW TRIAL.
4. CALL COMPLETED BY PRINCIPAL CITY ROUTING. SEE SC116-1
5. IF 6D CARD DROPS WITH FOF/FRO/FMB INSTRUCTIONS, SEE Z302
   IF 6D CARD DROPS WITH CC INSTRUCTIONS, SEE SC 117-1
   IF 6D CARD DROPS WITH CR INSTRUCTIONS, SEE SC 118-1
   IF 6D CARD DROPS WITH RR INSTRUCTIONS, SEE SC 119-1
   IF 6D CARD DOES NOT DROP, AND PRINCIPAL CITY ROUTING WAS INDICATED ON THE 3D CARD, SEE SC 116-1
   IF 6D CARD DOES NOT DROP, AND NO PRINCIPAL CITY ROUTING WAS INDICATED ON THE 3D CARD, SEE OS 174-1.

CARD TRANSLATOR CKT.	SD-68342-01, ISS.6
* DECODER CKT.	SD-68340-01, ISS.8
DECODER CONNECTOR CKT.	SD-68339-01, ISS.4
INCOMING SENDER CKT.-DP-4A	SD-68221-01, ISS.14
INCOMING SENDER CKT.-MF-4A	SD-68222-01, ISS.16
INCOMING SENDER CKT.-DP-4M	SD-68423-01, ISS.2
INCOMING SENDER CKT.-MF-4M	SD-68424-01, ISS.4
MARKER CKT.	SD-68388-01, ISS.7
MARKER CONNECTOR CKT.	SD-68395-01, ISS.5
TRANSLATOR CONNECTOR CKT.	SD-68341-01, ISS.6

DECODER

OVERALL OPERATIONS FOR A CALL COMPLETED BY 6-DIGIT TRANSLATION

FOF/FRO/FMB ROUTING INSTRUCTION ON A 6D CARD

NO. 4A OR 4M TOLL

3 SHEETS, SHEET 2

SC 115-1

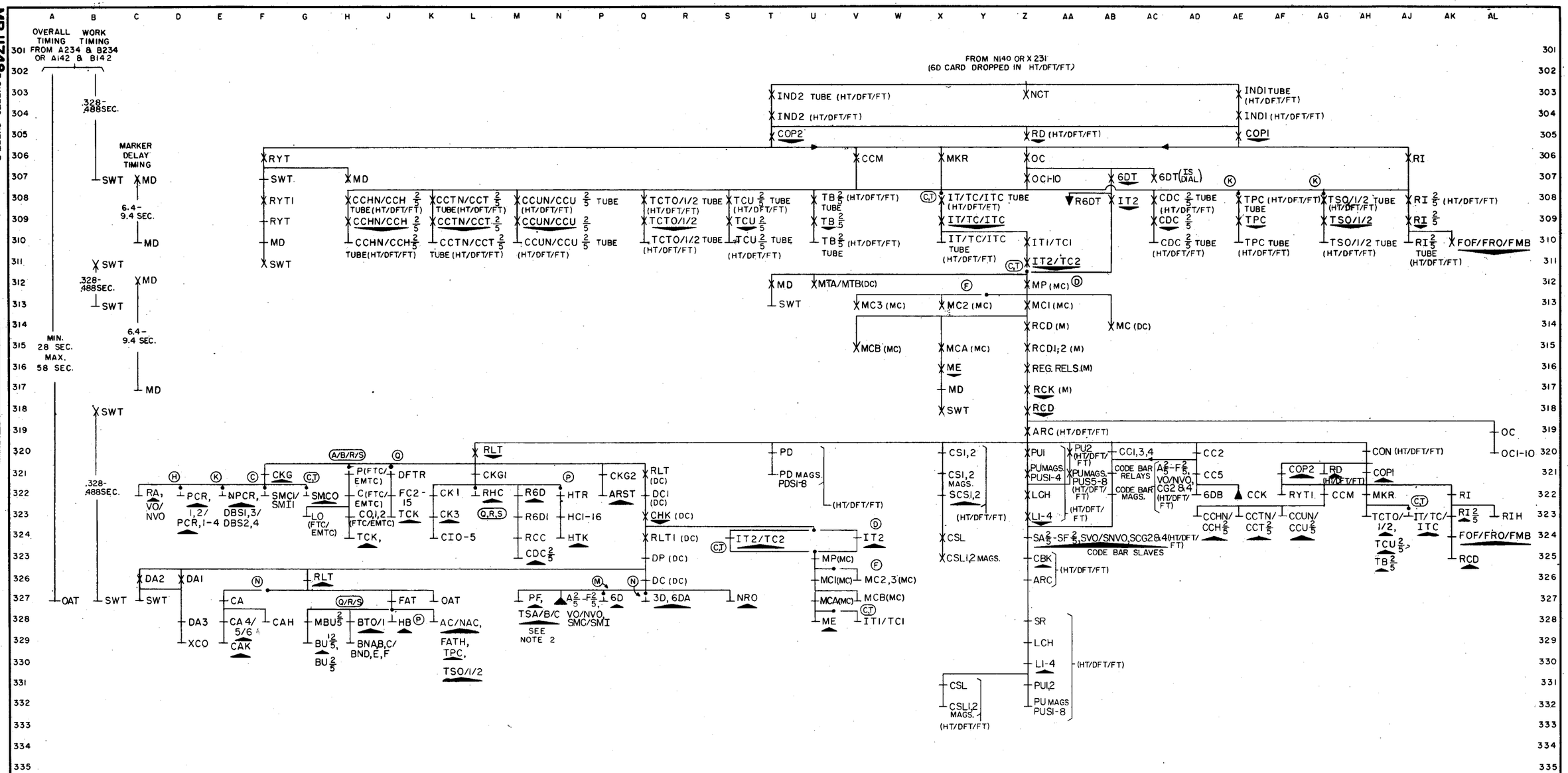

FIG. 3. READING 6D CARD (WITH FOF/FRO/FMB ROUTING INST.) IN HT/DFT/FT

MP-11748 3 SHEETS, SHEET 3

ISSUE			
DATE	1	12-17-51	2	10-29-53

DECODER

OVERALL OPERATIONS FOR A CALL COMPLETED BY 6-DIGIT TRANSLATION

FOF/FRO/FMB ROUTING INSTRUCTION ON A 6D CARD

NO. 4A OR 4M TOLL

3 SHEETS, SHEET 3

SC115-1

BELL TELEPHONE LABORATORIES, INC.

PRINTED IN U. S. A.

ORDER AS BSP ITEM MP-11748

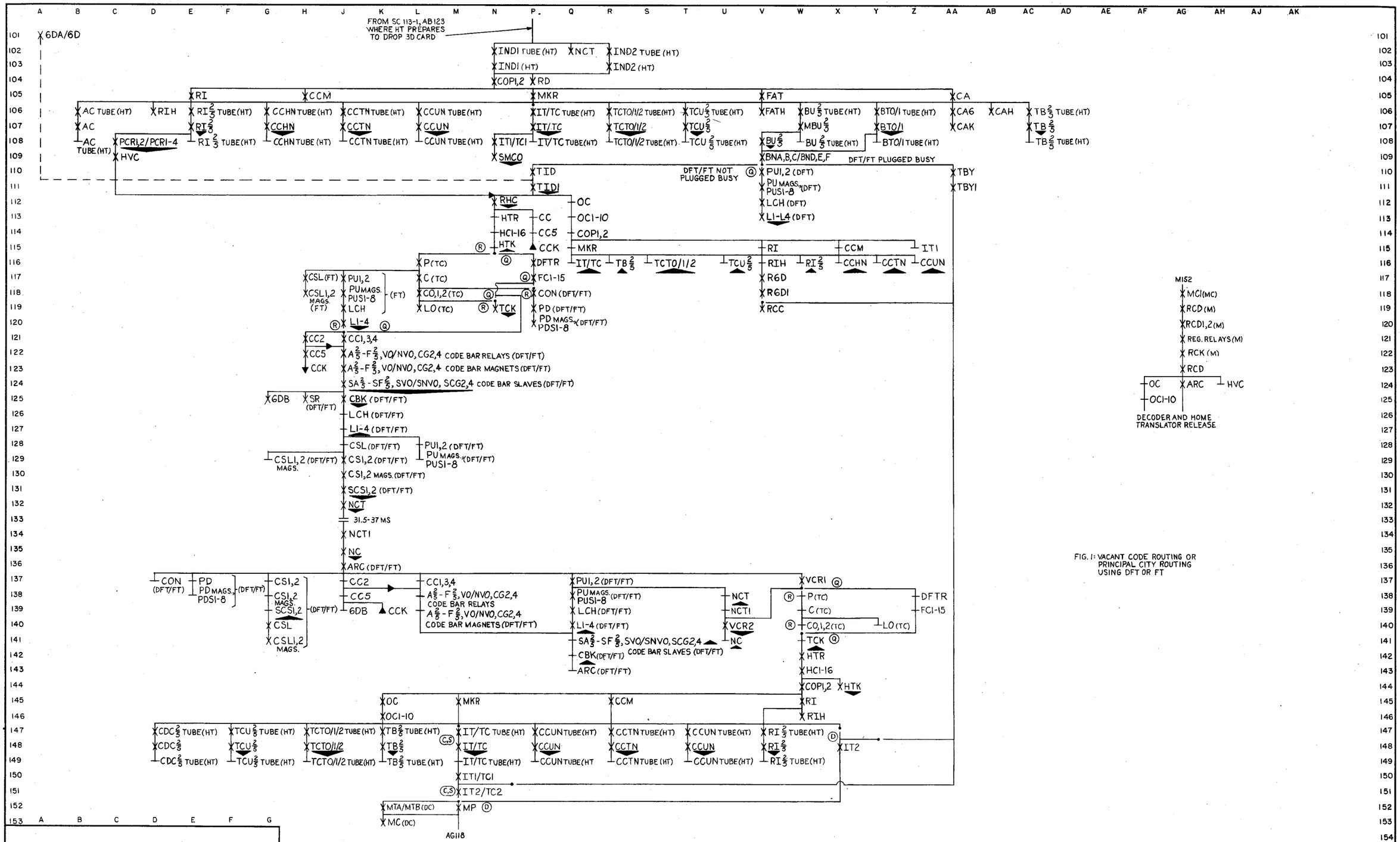

FIG. 1: VACANT CODE ROUTING OR PRINCIPAL CITY ROUTING USING DFT OR FT

DECODER
VACANT CODE OR PRINCIPAL CITY ROUTING

SC 116-1

2 SHEETS, SHEET 1

NO. 4A OR 4M TOLL

ISSUE 2 | MADE REC. 1-5-54

2 SHEETS, SHEET 1

MP-11749

BELL TELEPHONE LABORATORIES, INC

ORDER AS BSP ITEM MP-11749

PRINTED IN U. S. A.

MP-11749

2 SHEETS, SHEET 2

ISSUE		
DATE	2	M.L.N. R.C.
1-5-54		

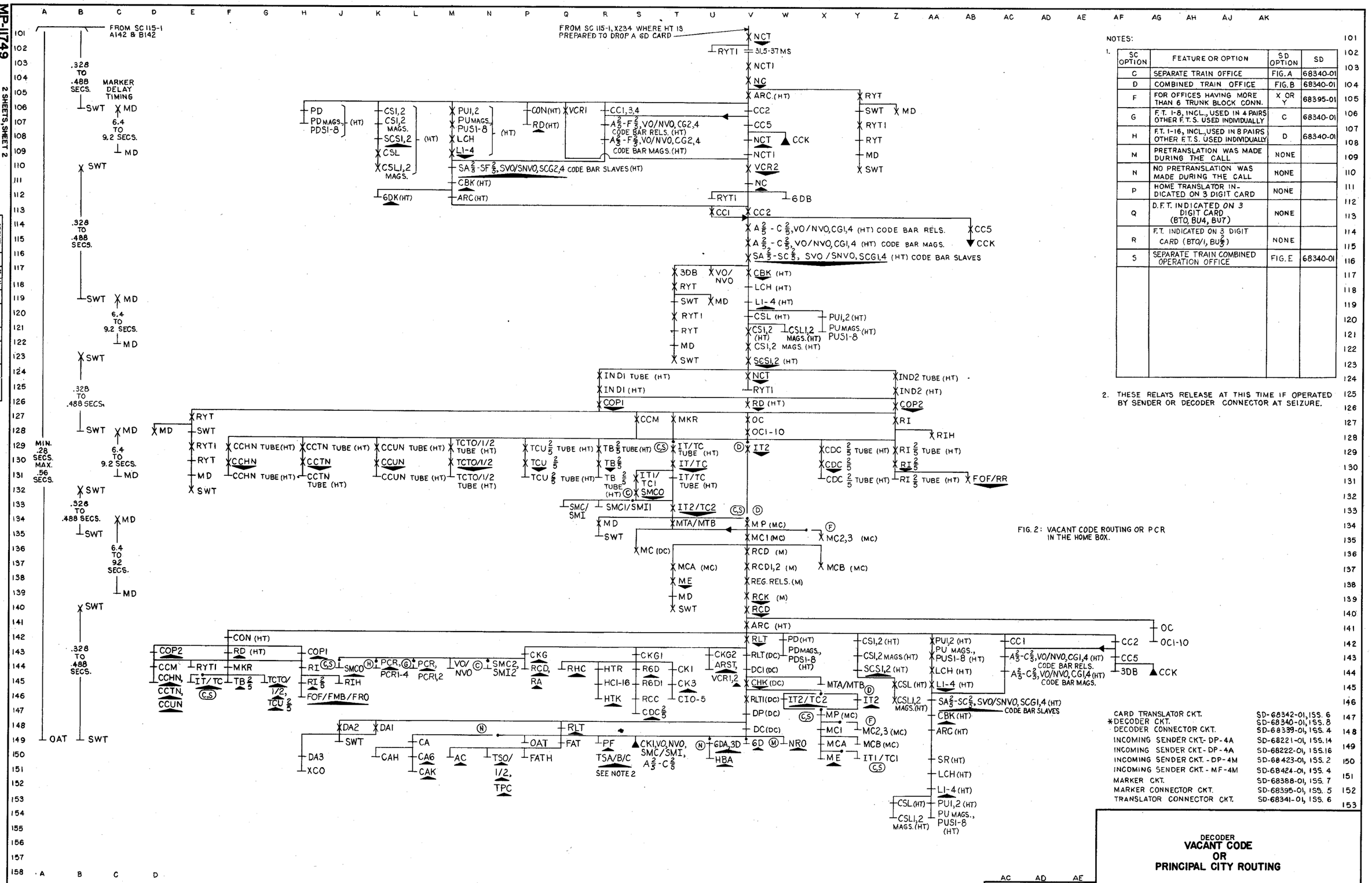

FIG. 2: VACANT CODE ROUTING OR PCR IN THE HOME BOX.

NOTES:

1.

SC OPTION	FEATURE OR OPTION	SD OPTION	SD
C	SEPARATE TRAIN OFFICE	FIG. A	68340-01
D	COMBINED TRAIN OFFICE	FIG. B	68340-01
F	FOR OFFICES HAVING MORE THAN 6 TRUNK BLOCK CONN.	X OR Y	68395-01
G	F.T. 1-8, INCL., USED IN 4 PAIRS OTHER F.T.S. USED INDIVIDUALLY	C	68340-01
H	F.T. 1-16, INCL., USED IN 8 PAIRS OTHER F.T.S. USED INDIVIDUALLY	D	68340-01
M	PRETRANSLATION WAS MADE DURING THE CALL	NONE	
N	NO PRETRANSLATION WAS MADE DURING THE CALL	NONE	
P	HOME TRANSLATOR INDICATED ON 3 DIGIT CARD	NONE	
Q	D.F.T. INDICATED ON 3 DIGIT CARD (BTO, BU4, BU7)	NONE	
R	F.T. INDICATED ON 3 DIGIT CARD (BTO/1, BU 2/5)	NONE	
S	SEPARATE TRAIN COMBINED OPERATION OFFICE	FIG. E	68340-01

2. THESE RELAYS RELEASE AT THIS TIME IF OPERATED BY SENDER OR DECODER CONNECTOR AT SEIZURE.

CARD TRANSLATOR CKT.	SD-68342-01, ISS. 6
*DECODER CKT.	SD-68340-01, ISS. 8
DECODER CONNECTOR CKT.	SD-68339-01, ISS. 4
INCOMING SENDER CKT.- DP-4A	SD-68221-01, ISS. 14
INCOMING SENDER CKT.- DP-4A	SD-68222-01, ISS. 16
INCOMING SENDER CKT. - DP-4M	SD-68423-01, ISS. 2
INCOMING SENDER CKT. - MF-4M	SD-68424-01, ISS. 4
MARKER CKT.	SD-68388-01, ISS. 7
MARKER CONNECTOR CKT.	SD-68395-01, ISS. 5
TRANSLATOR CONNECTOR CKT.	SD-68341-01, ISS. 6

DECODER
VACANT CODE OR PRINCIPAL CITY ROUTING

NO. 4A OR 4M TOLL

2 SHEETS, SHEET 2

SC 116-1

BELL TELEPHONE LABORATORIES, INC.

PRINTED IN U. S. A.

ORDER AS BSP ITEM MP-11749

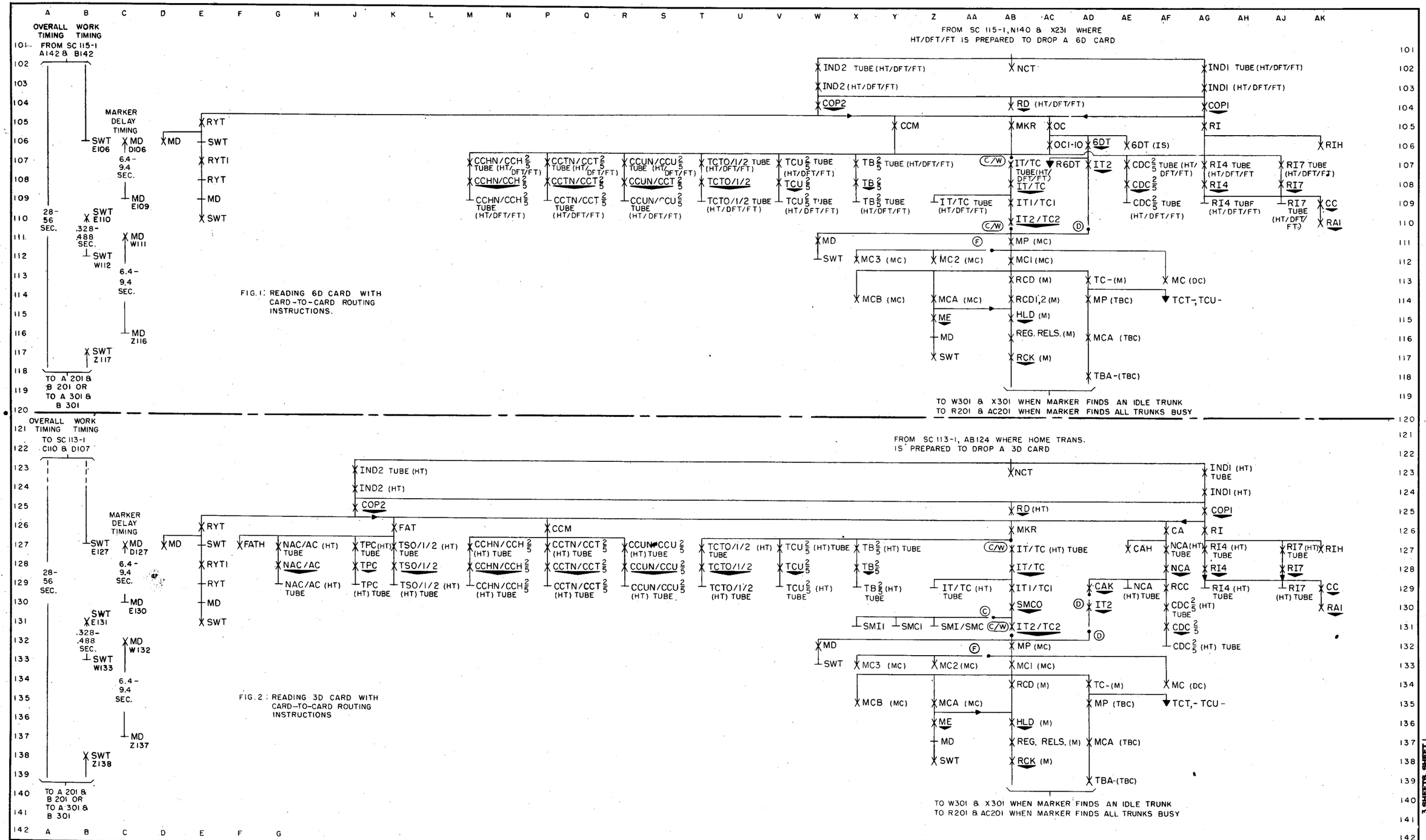

FIG. 1: READING 6D CARD WITH CARD-TO-CARD ROUTING INSTRUCTIONS.

FIG. 2: READING 3D CARD WITH CARD-TO-CARD ROUTING INSTRUCTIONS

DECODER

OVERALL OPERATIONS FOR A CALL USING CARD-TO-CARD ROUTING INSTRUCTION

(3D CARD IN HT OR 6D CARD IN HT/DFT/FT)

SC 117-1 3 SHEETS, SHEET 1

NO. 4A OR 4M TOLL

ORDER AS BSP ITEM MP-11750

ISSUE	1	2
DATE	12-17-51	10-28-53

3 SHEETS, SHEET 1

MP-11750

BELL TELEPHONE LABORATORIES, INC.

PRINTED IN U. S. A.

ISSUE	DATE
1 R.E.W. R.E.K.	12-17-51
2 R.E.K.	10-28-53

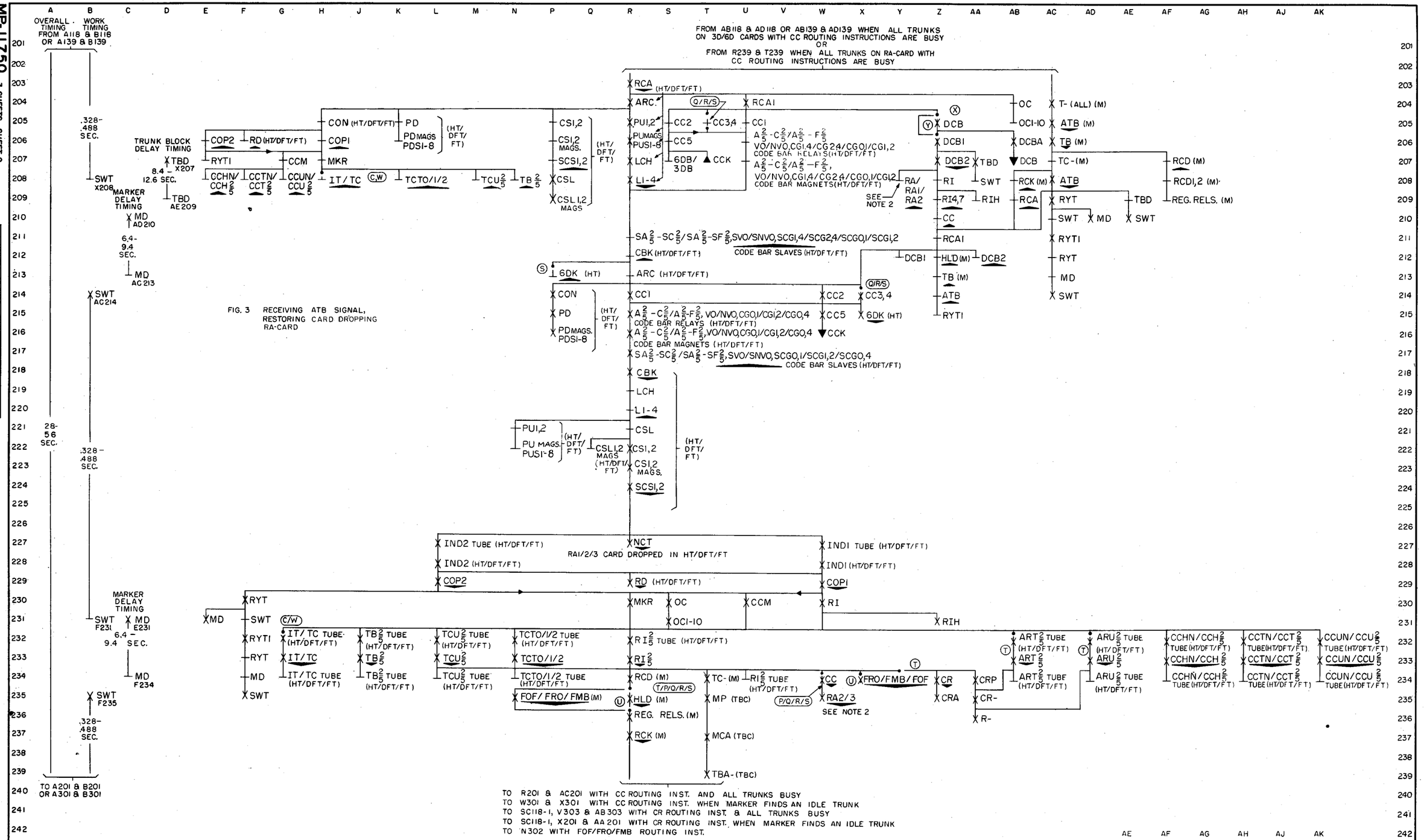

DECODER

OVERALL OPERATIONS FOR A CALL USING CARD-TO-CARD ROUTING INSTRUCTION

(3D CARD IN HT OR 6D CARD IN HT/DFT/FT)

NO 4A OR 4M TOLL

3 SHEETS, SHEET 2

SC117-1

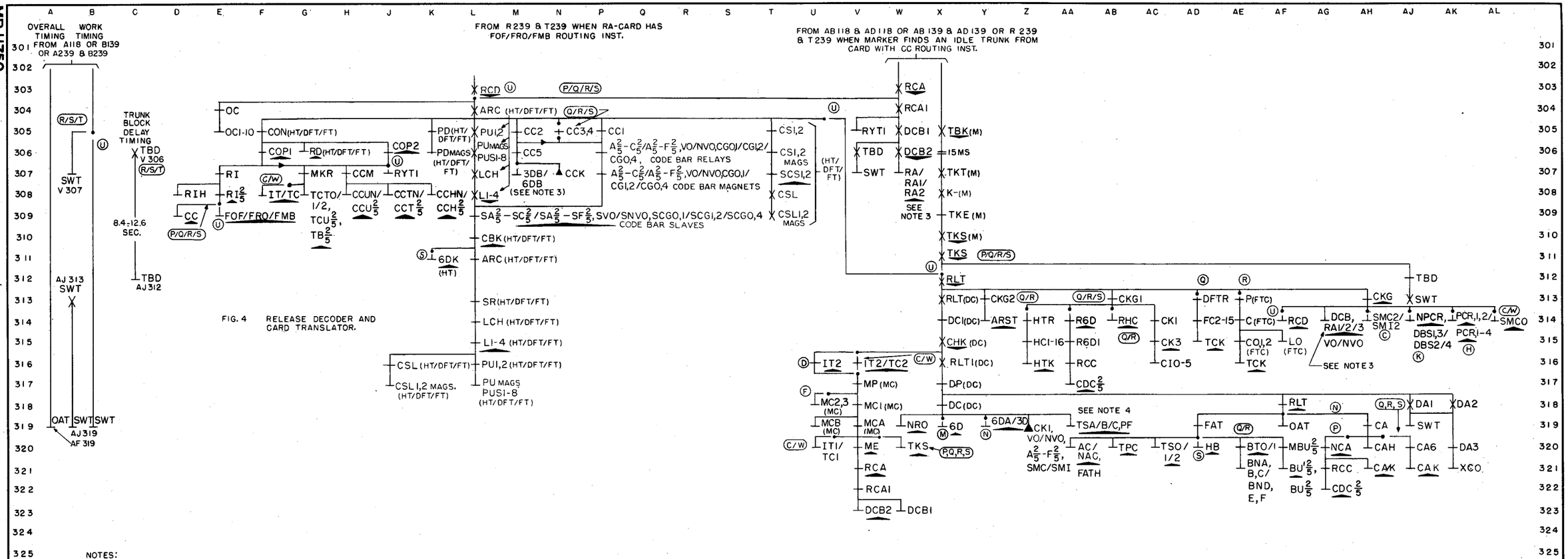

FIG. 4 RELEASE DECODER AND CARD TRANSLATOR.

NOTES:

1.

SC OPTION	FEATURE OR OPTION	SD OPTION	SD
C	SEPARATE TRAIN OFFICE	FIG.A	68340-01
D	COMBINED TRAIN OFFICE	FIG.B	68340-01
F	FOR OFFICES HAVING MORE THAN 6 TRUNK BLOCK CONNECTORS	X OR Y	68395-01
H	PCR-INDICATED BY OPERATION OF RI1/RI2/RI4 FROM FIRST 3D CARD	NONE	
K	NPCR-INDICATED BY OPERATION OF RI7 & RI0 FROM FIRST 3D CARD	NONE	
M	PRETRANSLATION WAS MADE DURING CALL	NONE	
N	NO PRETRANSLATION WAS MADE DURING CALL	NONE	
P	CC ROUTING INSTRUCTIONS ON 3D CARD (H T)	NONE	
Q	CC ROUTING INSTRUCTIONS ON 6D CARD (DFT)	NONE	
R	CC ROUTING INSTRUCTIONS ON 6D CARD (FT)	NONE	
S	CC ROUTING INSTRUCTIONS ON 6D CARD (H T)	NONE	
T	CR ROUTING INSTRUCTIONS ON LAST RA-CARD (3D OR 6D, HT/DFT, FT)	NONE	
U	FOF/FRO/FMB ROUTING INSTRUCTIONS ON LAST RA-CARD (3D OR 6D, HT/DFT/FT)	NONE	
V	3DB/6DB RELEASED WHEN 3D OR 6D CARD IS BEING RESTORED	NONE	
W	SEPARATE TRAIN COMBINED OPERATION OFFICE	FIG.E	68340-01
X	WHEN 3D/6D CARD IS RESTORED	NONE	68340-01
Y	WHEN RA1/2/3 CARD IS RESTORED DCB RELAY LOCKED	NONE	68340 01

2. IF 3D/6D CARD IS BEING RESTORED, OPERATED DCB2 WILL RELEASE RA & OPERATED CC WILL OPERATE RA1.
IF RA1 CARD IS BEING RESTORED (IN ORDER TO DROP AN RA2 CARD) OPERATED DCB2 WILL RELEASE RA1 & OPERATED CC WILL OPERATE RA2.
IF RA2 CARD IS BEING RESTORED (IN ORDER TO DROP AN RA3 CARD) OPERATED DCB2 WILL RELEASE RA2.

3. IF AN IDLE TRUNK IS FOUND FROM TRANSLATOR ON A:
A- 3D/6D CARD: NORMAL CC5 RELEASES 3DB/6DB
OPERATED DCB2 RELEASES RA
NORMAL CKG RELEASES RA1
B- RA1 CARD: OPERATED DCB2 RELEASES RA1
NORMAL CKG RELEASES RA2
C- RA2 CARD: OPERATED DCB2 RELEASES RA2
NORMAL CKG RELEASES RA3
D- RA3 CARD: NORMAL CKG RELEASES RA3

4. THESE RELAYS RELEASE AT THIS TIME IF OPERATED BY SENDER OR DECODER CONNECTOR AT SEIZURE.

INCOMING DP SENDER CKT-4A	SD-68221-01, ISS.14
INCOMING MF SENDER CKT-4A	SD-68222-01, ISS.16
DECODER CONNECTOR CKT	SD-68339-01, ISS.4
*DECODER CKT	SD-68340-01, ISS.8
TRANSLATOR CONNECTOR CKT	SD-68341-01, ISS.6
CARD TRANSLATOR CKT	SD-68342-01, ISS.6
MARKER CKT	SD-68388-01, ISS.7
MARKER CONNECTOR CKT	SD-68395-01, ISS.5
INCOMING DP SENDER CKT-4M	SD-68423-01, ISS.2
INCOMING MF SENDER CKT-4M	SD-68424-01, ISS.4

DECODER
OVERALL OPERATIONS FOR A CALL USING CARD-TO-CARD ROUTING INSTRUCTION
(3D CARD IN HT OR 6D CARD IN HT/DFT/FT

NO 4A OR 4M TOLL

3 SHEETS, SHEET 3

SC 117-1

BELL TELEPHONE LABORATORIES, INC.
PRINTED IN U. S. A.
ORDER AS BSP ITEM MP-11750

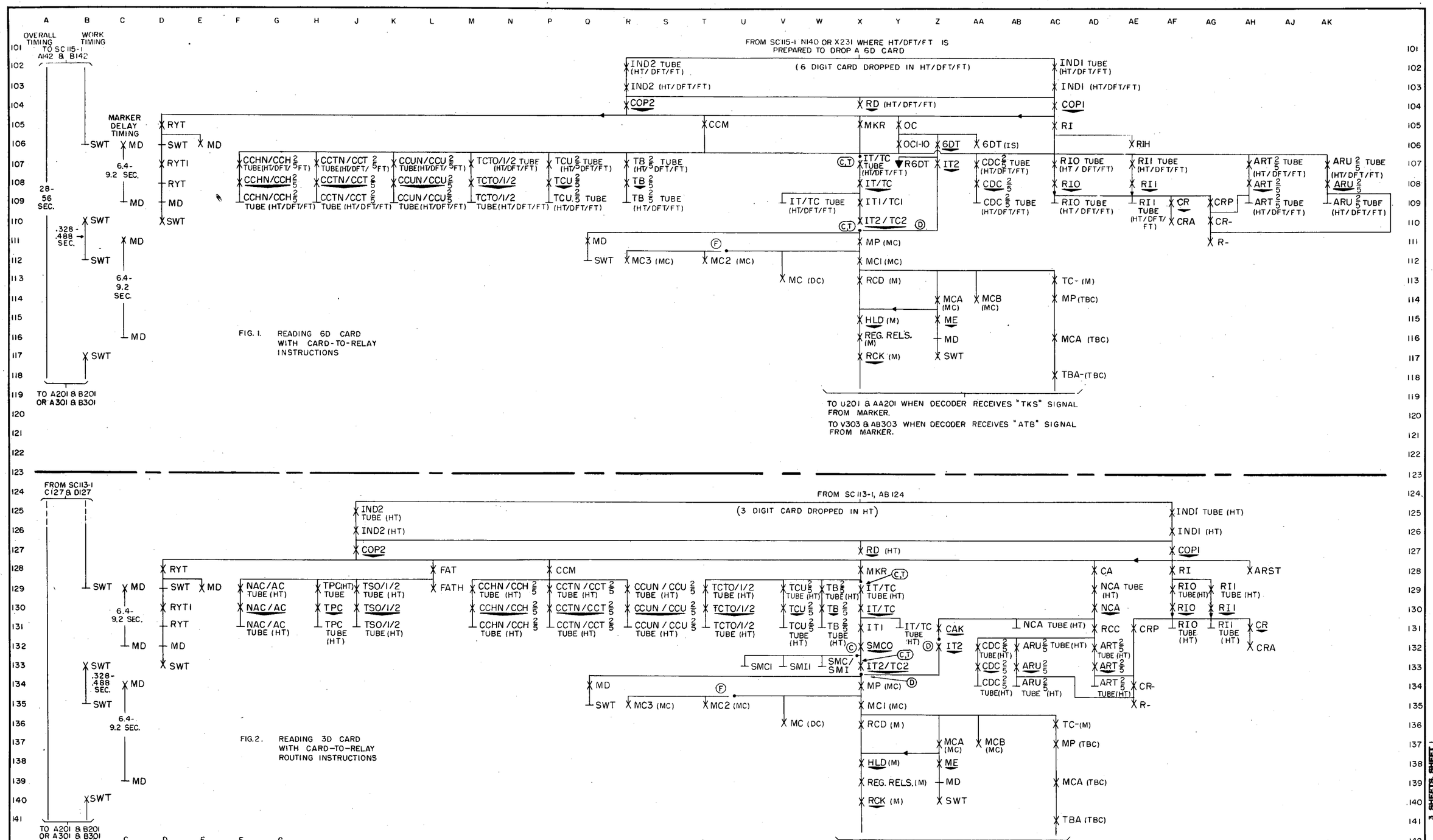

FIG. 1. READING 6D CARD WITH CARD-TO-RELAY INSTRUCTIONS

FIG. 2. READING 3D CARD WITH CARD-TO-RELAY ROUTING INSTRUCTIONS

DECODER

OVERALL OPERATIONS FOR A CALL USING CARD-TO-RELAY ROUTING INSTRUCTION

SC 118-1 — 3 SHEETS, SHEET 1

NO. 4A OR 4M TOLL

ISSUE 1 — A.S.M. — 2 — K.L.C.
DATE 12-17-51 — 10-19-53

3 SHEETS, SHEET 1

MP-11751

BELL TELEPHONE LABORATORIES, INC.

ORDER AS BSP ITEM MP-11751

PRINTED IN U. S. A.

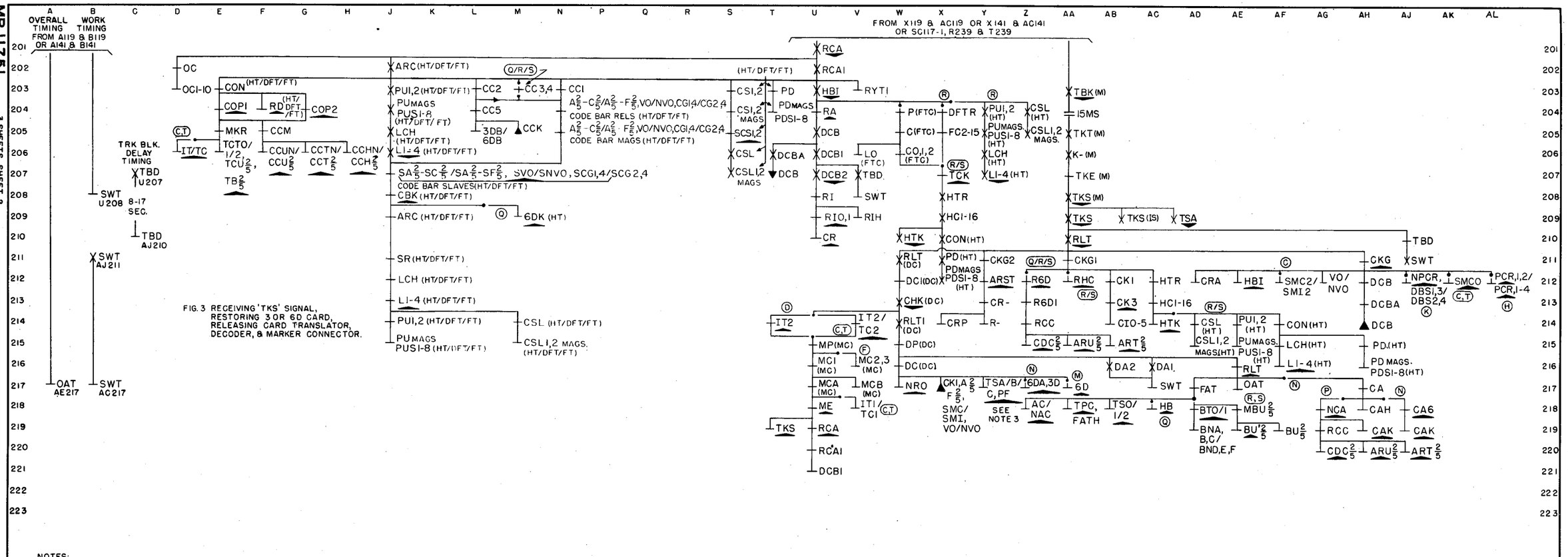

FIG. 3 RECEIVING 'TKS' SIGNAL, RESTORING 3 OR 6D CARD, RELEASING CARD TRANSLATOR, DECODER, & MARKER CONNECTOR.

NOTES:

1.

SC OPTION	FEATURE OR OPTION	SD OPTION	SD
C	SEPARATE TRAIN OFFICE	FIG.A	68340-01
D	COMBINED TRAIN OFFICE	FIG.B	68340-01
F	FOR OFFICES HAVING MORE THAN 6 TRUNK BLOCK CONNECTORS	X OR Y	68395-01
H	PCR-INDICATED BY OPERATION OF RI1/RI2/RI4 FROM FIRST 3D CARD	NONE	
K	NPCR-INDICATED BY OPERATION OF RI7 & RIO FROM FIRST 3D CARD	NONE	
M	PRETRANSLATION WAS MADE DURING CALL	NONE	
N	NO PRETRANSLATION WAS MADE DURING CALL	NONE	
P	CR ROUTING INSTRUCTIONS ON 3D CARD	NONE	
Q	CR ROUTING INSTRUCTIONS ON 6D CARD (H. TRANS.)	NONE	
R	CR ROUTING INSTRUCTIONS ON 6D CARD (DFT)	NONE	
S	CR ROUTING INSTRUCTIONS ON 6D CARD (FT)	NONE	
T	SEPARATE TRAIN COMBINED OPERATION OFFICE	FIG. E	68340-01

2. FIG.4 IS CONTINUED ON FIG.5, SC119-1, V301 WHICH IS SEQUENCE FOR READING 'AR' CARD AND RELEASING OF THE HOME TRANS, DECODER, AND MARKER CONNECTOR.

THE SAME SEQUENCE OF OPERATION IS USED FOR CARD-TO-RELAY ROUTING INSTRUCTION EXCEPT THAT CRA AND CRP RELEASE AND NOT RRA AND RRP.

3. THESE RELAYS RELEASE HERE IF OPERATED BY SENDER OR DECODER CONNECTOR AT SEIZURE.

CARD TRANSLATOR CKT.	SD-68342-01, ISS.6
DECODER CONNECTOR CKT.	SD-68339-01, ISS.4
*DECODER CKT.	SD-68340-01, ISS.8
INCOMING SENDER CKT. - DP-4A	SD-68221-01, ISS.14
INCOMING SENDER CKT. - MF-4A	SD-68222-01, ISS.16
MARKER CONNECTOR CKT.	SD-68395-01, ISS.5
MARKER CKT.	SD-68388-01, ISS.7
TRANSLATOR CONNECTOR CKT.	SD-68341-01, ISS.6
INCOMING SENDER CKT-DP-4M	SD-68423-01, ISS.2
INCOMING SENDER CKT-MF-4M	SD-68424-01, ISS.4

DECODER

OVERALL OPERATIONS FOR A CALL USING CARD-TO-RELAY ROUTING INSTRUCTION

NO. 4A OR 4M TOLL

3 SHEETS, SHEET 2

SC118-1

BELL TELEPHONE LABORATORIES, INC.
PRINTED IN U. S. A.
ORDER AS BSP ITEM MP-11751

ISSUE	DATE	
1	12-17-51	A.S.M.
2	10-19-53	D.L.K.

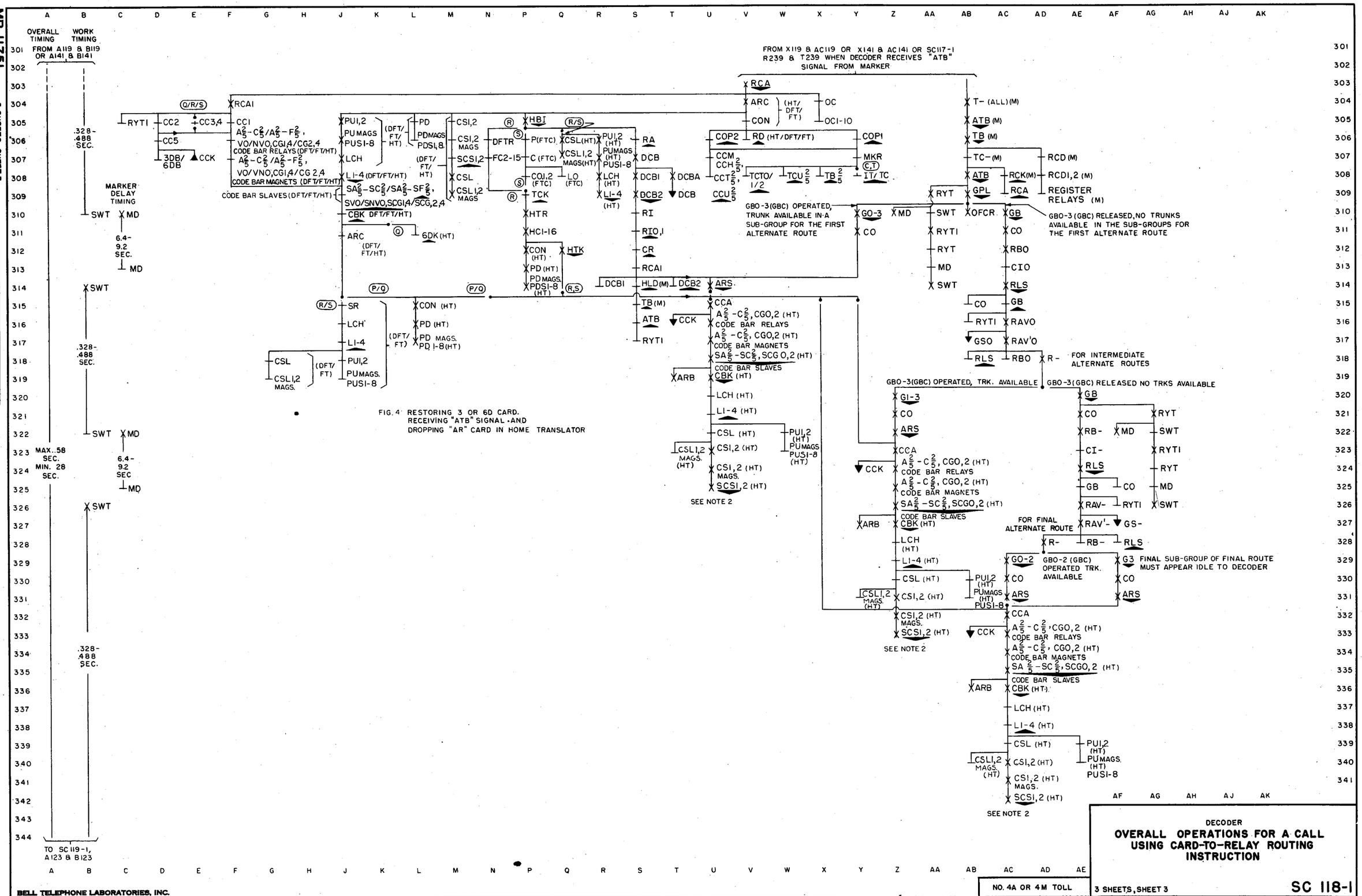

FIG. 4 RESTORING 3 OR 6D CARD. RECEIVING "ATB" SIGNAL AND DROPPING "AR" CARD IN HOME TRANSLATOR

DECODER

OVERALL OPERATIONS FOR A CALL USING CARD-TO-RELAY ROUTING INSTRUCTION

NO. 4A OR 4M TOLL

3 SHEETS, SHEET 3

SC 118-1

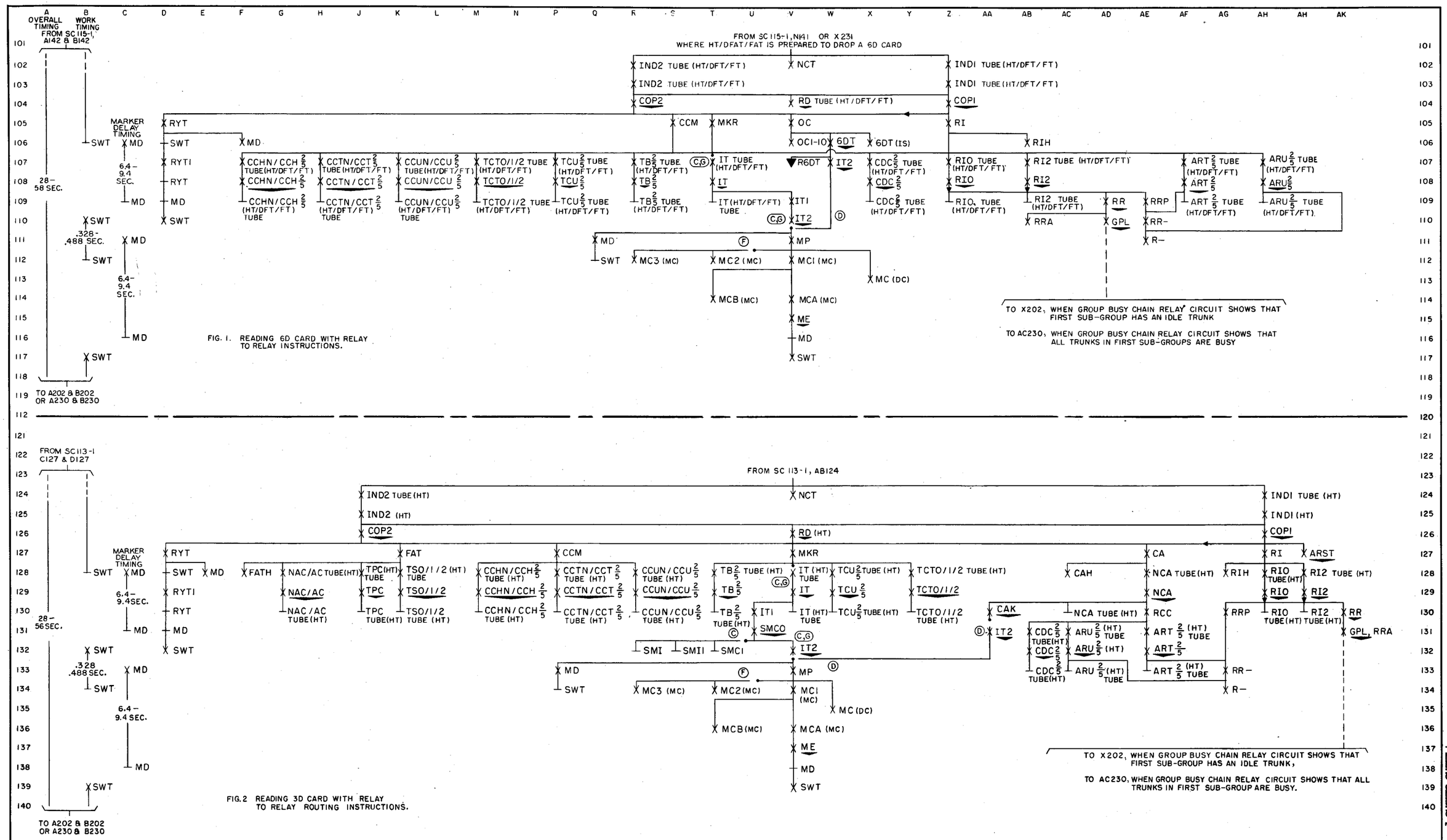

FIG. 1. READING 6D CARD WITH RELAY TO RELAY INSTRUCTIONS.

FIG. 2 READING 3D CARD WITH RELAY TO RELAY ROUTING INSTRUCTIONS.

DECODER

OVERALL OPERATIONS FOR A CALL USING RELAY-TO-RELAY ROUTING INSTRUCTION

SC119-1

3 SHEETS, SHEET 1

NO. 4A OR 4M TOLL

ORDER AS BSP ITEM MP-11754

BELL TELEPHONE LABORATORIES, INC.

PRINTED IN U. S. A.

ISSUE	1	2
DATE	12-17-51	10-28-53

3 SHEETS, SHEET 1

MP-11754

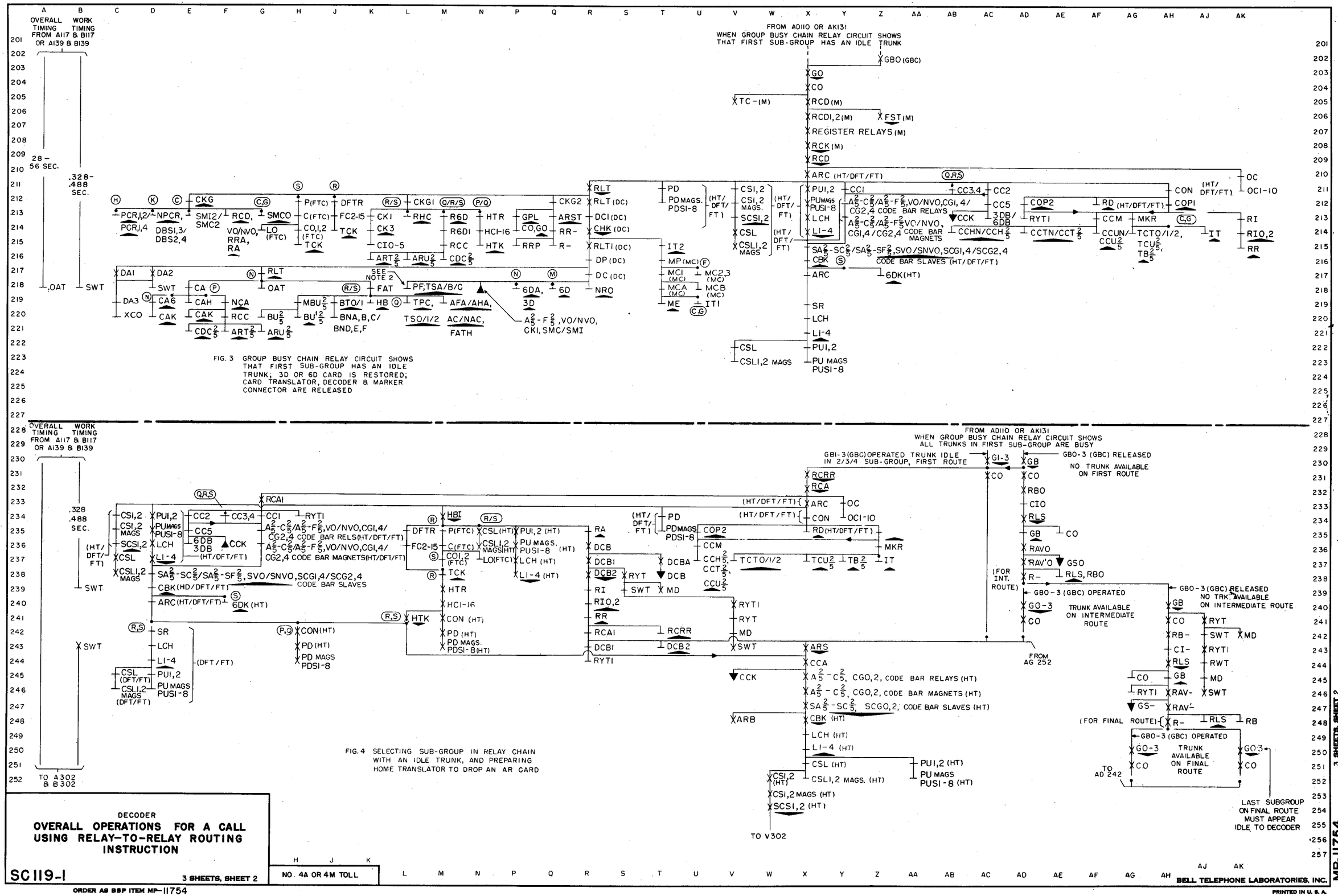

FIG. 3 GROUP BUSY CHAIN RELAY CIRCUIT SHOWS THAT FIRST SUB-GROUP HAS AN IDLE TRUNK; 3D OR 6D CARD IS RESTORED; CARD TRANSLATOR, DECODER & MARKER CONNECTOR ARE RELEASED

FIG. 4 SELECTING SUB-GROUP IN RELAY CHAIN WITH AN IDLE TRUNK, AND PREPARING HOME TRANSLATOR TO DROP AN AR CARD

DECODER

OVERALL OPERATIONS FOR A CALL USING RELAY-TO-RELAY ROUTING INSTRUCTION

SC119-1 3 SHEETS, SHEET 2

NO. 4A OR 4M TOLL

ISSUE	1	2
DATE	12-17-57	10-28-59

3 SHEETS, SHEET 2

MP-11754

BELL TELEPHONE LABORATORIES, INC.

ORDER AS BSP ITEM MP-11754

PRINTED IN U. S. A.

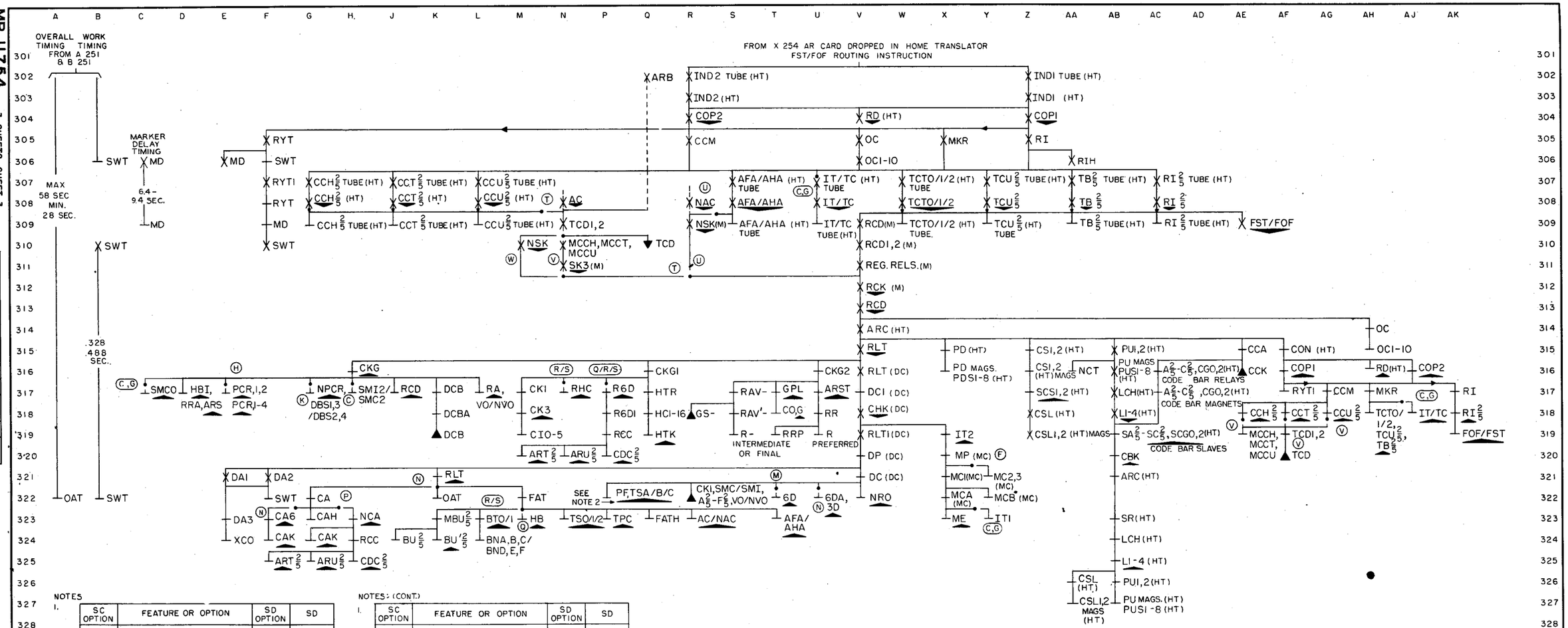

NOTES

1.

SC OPTION	FEATURE OR OPTION	SD OPTION	SD
C	SEPERATE TRAIN OFFICE	FIG.A	68340-01
D	COMBINED TRAIN OFFICE	FIG.B	68340-01
F	FOR OFFICES HAVING MORE THAN 6 TRUNK BLOCK CONNECTORS.	X OR Y	68395-01
G	SEPERATE TRAIN COMBINED OPERATION OFFICE	FIG. E	68340-01
H	PCR-INDICATED BY OPERATION OF RI1/RI2/RI4 FROM FIRST 3D CARD	NONE	
K	NPCR-INDICATED BY OPERATION OF RI7 & RIO FROM FIRST 3D CARD	NONE	
M	PRETRANSLATION WAS MADE DURING CALL	NONE	
N	NO PRETRANSLATION WAS MADE DURING CALL	NONE	
P	RR ROUTING INSTRUCTION ON 3D CARD	NONE	
Q	RR ROUTING INSTRUCTION ON 6D CARD (HT)	NONE	
R	RR ROUTING INSTRUCTION ON 6D CARD (DFT)	NONE	
S	RR ROUTING INSTRUCTION ON 6D CARD (FT)	NONE	
T	AC OPERATED FROM 3D/6D CARD	NONE	
U	NAC OPERATED FROM 3D/6D CARD	NONE	

NOTES: (CONT.)

1.

SC OPTION	FEATURE OR OPTION	SD OPTION	SD
V	WHEN A 2/5 - C 2/5 SDR. INPUT MATCHES CCH 2/5, CCT 2/5, CCU 2/5 ON AR CARD	NONE	
W	WHEN A 2/5 - C 2/5 SDR. INPUT DOESN'T MATCH CCH 2/5, CCT 2/5, CCU 2/5	NONE	

2. THESE RELAYS RELEASE HERE IF OPERATED BY SENDER OR DECODER CONNECTOR AT SEIZURE.

FIG. 5: READING AR CARD AND RELEASING HOME TRANSLATOR, DECODER & MARKER CONNECTOR.

CARD TRANSLATOR CKT	SD 68342-01 ISS 6
DECODER CONNECTOR CKT	SD 68339-01 ISS 4
* DECORDER CKT.	SD-68340-01 ISS 8
INCOMING SENDER CKT-DP-4A	SD-68221-01, ISS 14
INCOMING SENDER CKT-MF-4A	SD-68222-01, ISS 16
INCOMING SENDER CKT.-DP-4M	SD-68423-01, ISS 2
INCOMING SENDER CKT.-MF-4M	SD-68424-01, ISS 4
MARKER CONNECTOR CKT	SD-68395-01, ISS 5
MARKER CKT.	SD-68388-01, ISS 7
TRANSLATOR CONNECTOR CKT.	SD-68341-01, ISS 6

DECODER

OVERALL OPERATIONS FOR A CALL USING RELAY-TO-RELAY ROUTING INSTRUCTION

NO. 4A OR 4M TOLL

3 SHEETS, SHEET 3

SC 119-1

BELL TELEPHONE LABORATORIES, INC.
PRINTED IN U. S. A.
ORDER AS BSP ITEM MP-11754

MP-11762

ISSUE	1	2
DATE	1-9-52	12-21-53
	A.B.B.	W.E.K.

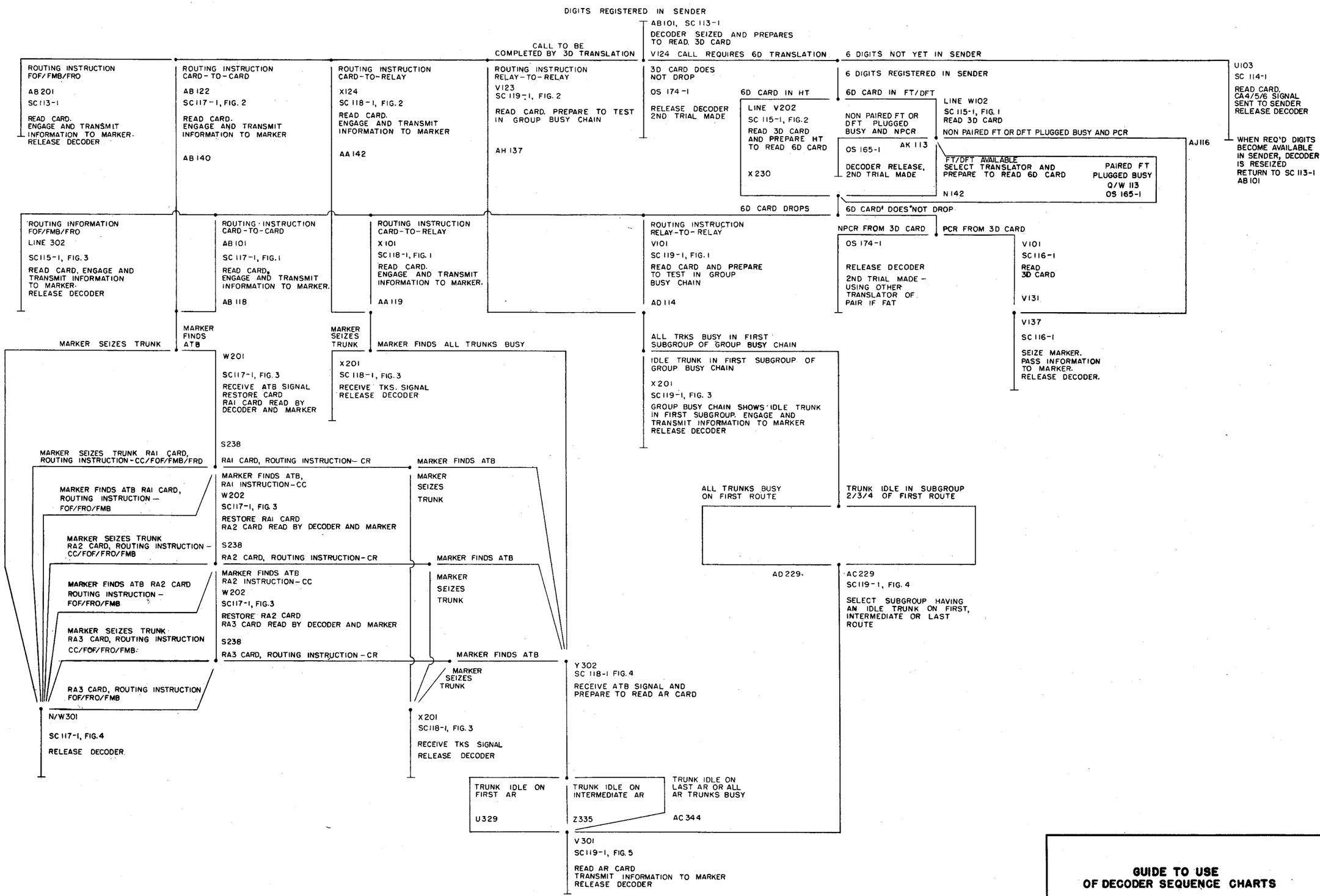

GUIDE TO USE OF DECODER SEQUENCE CHARTS

NO. 4A OR 4M TOLL

SC 120-1

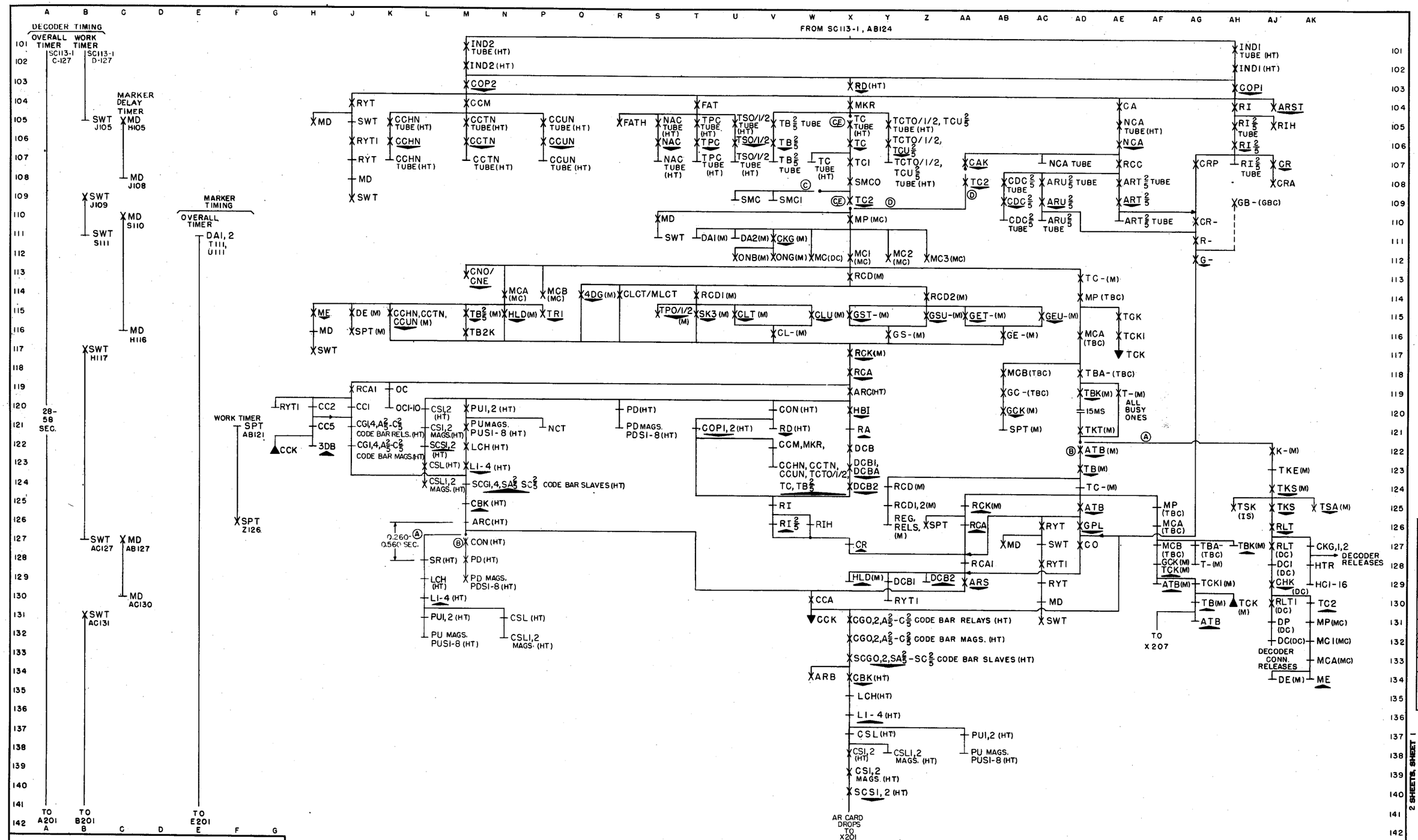

DECODER AND MARKER

OVERALL OPERATIONS FOR A CR TYPE CALL

(HLD ROUTING)

SC121-1

2 SHEETS, SHEET 1

NO. 4A OR 4M TOLL

ORDER AS BSP ITEM MP-11755

BELL TELEPHONE LABORATORIES, INC.

PRINTED IN U. S. A.

MP-11755

ISSUE	1	A.S.M. R.B.B.	2	H.L.H. R.E.C.
DATE	12-14-51		10-29-53	

MP-11755

2 SHEETS, SHEET 2

ISSUE	DATE
1	12-14-51
2	10-29-53

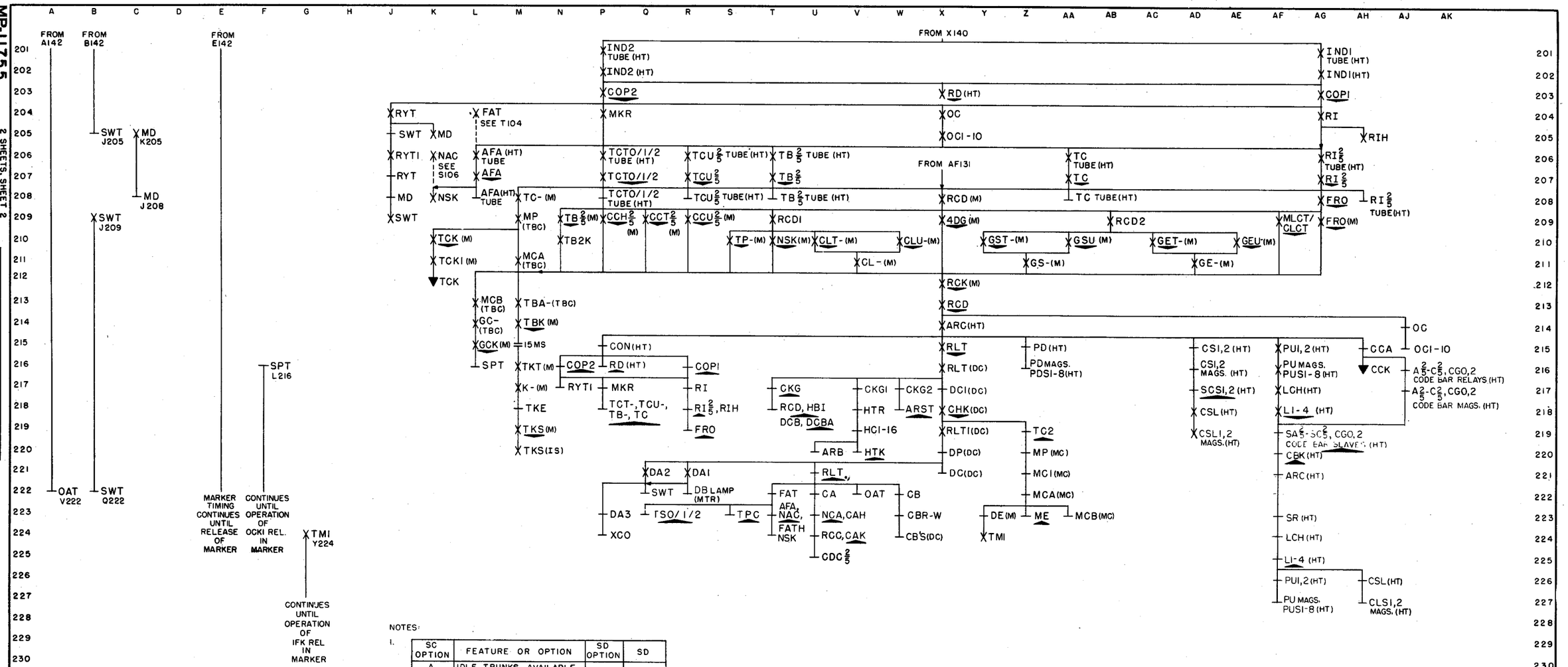

NOTES:

1.

SC OPTION	FEATURE OR OPTION	SD OPTION	SD
A	IDLE TRUNKS AVAILABLE		
B	ALL TRUNKS BUSY		
C	SEPARATE TRAIN OPERATION	FIG.A	68340-01
D	COMBINED TRAIN OPERATION	FIG.B	
E	SEPARATE TRAIN COMBINED OPERATION OFFICE	FIG.E	

2. MAIN ASSUMPTIONS IN PREPARATION OF THIS SEQUENCE CHART ARE:
   TOLL COMPLETING MARKER USED.
   TRUNKS AVAILABLE ON AR CARD.
   DFT OF FT NOT INVOLVED.

CARD TRANSLATOR CKT.	SD-68342-01, ISS. 6
*DECODER CKT.	SD-68340-01, ISS. 8
DECODER CONNECTOR CKT.	SD-68339-01, ISS. 4
MARKER CKT.	SD-68389-01, ISS. 7
MARKER CONNECTOR CKT.	SD-68395-01, ISS. 5

DECODER AND MARKER

OVERALL OPERATIONS FOR A CR TYPE CALL

(HLD ROUTING)

NO. 4A OR 4M TOLL

2 SHEETS, SHEET 2

SC121-1

BELL TELEPHONE LABORATORIES, INC.

PRINTED IN U. S. A.

ORDER AS BSP ITEM MP-11755

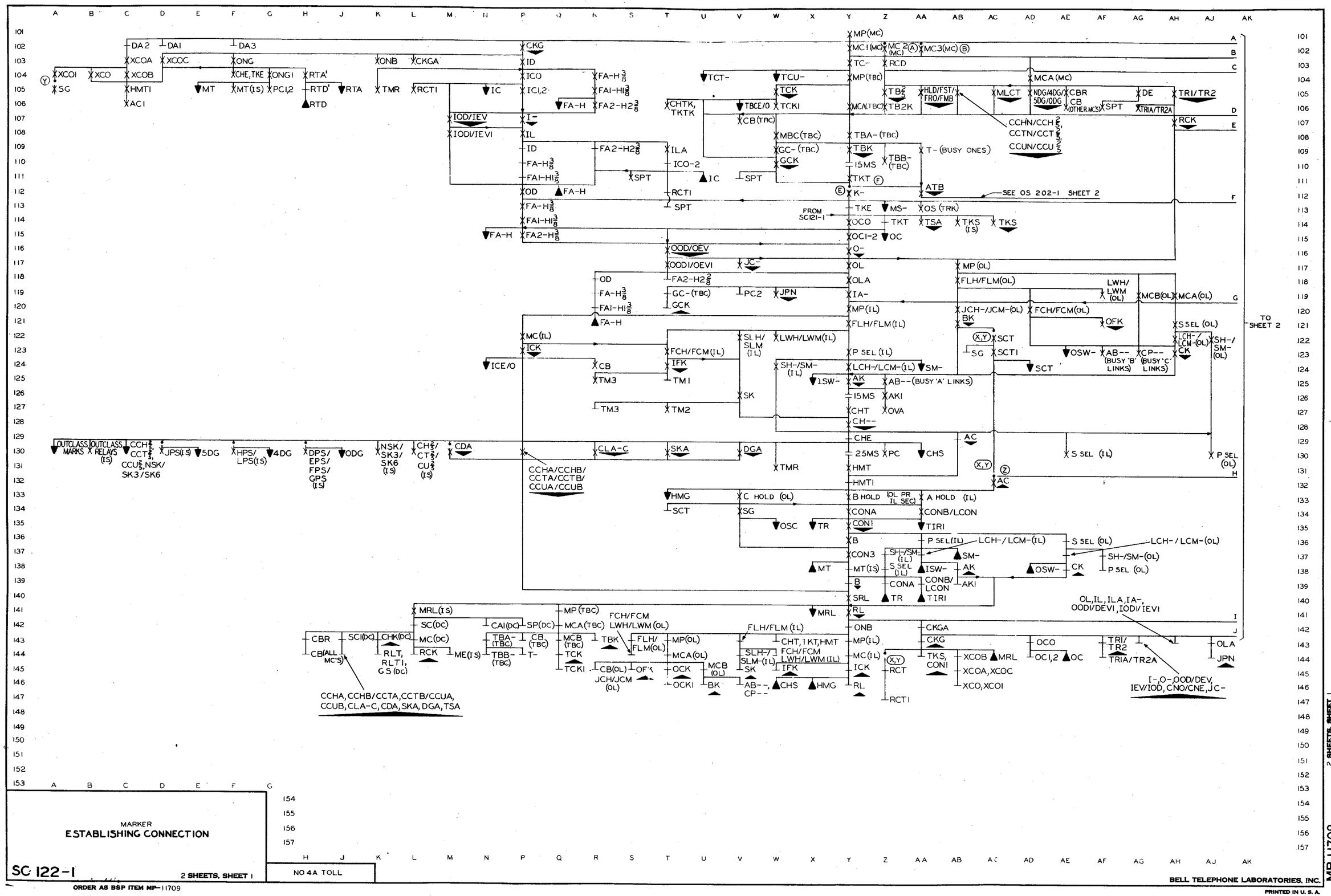
SEE OS 202-1 SHEET 2
FROM SC121-1
TO SHEET 2
CCHA, CCHB/CCTA, CCTB/CCUA, CCUB, CLA-C, CDA, SKA, DGA, TSA
OL, IL, ILA, IA-, OOD1/DEVI, IOD1/IEVI
I-, O-, OOD/DEV, IEV/IOD, CNO/CNE, JC-
CCHA/CCHB/CCTA/CCTB/CCUA/CCUB
CCHN/CCH2, CCTN/CCT2, CCUN/CCU2
MARKER
ESTABLISHING CONNECTION
SC 122-1
2 SHEETS, SHEET 1
NO 4A TOLL
ORDER AS BSP ITEM MP-11709
BELL TELEPHONE LABORATORIES, INC.
PRINTED IN U. S. A.
MP-11709
2 SHEETS, SHEET 1
ISSUE 1
DATE 10-1-51

MP-11709 2 SHEETS, SHEET 2

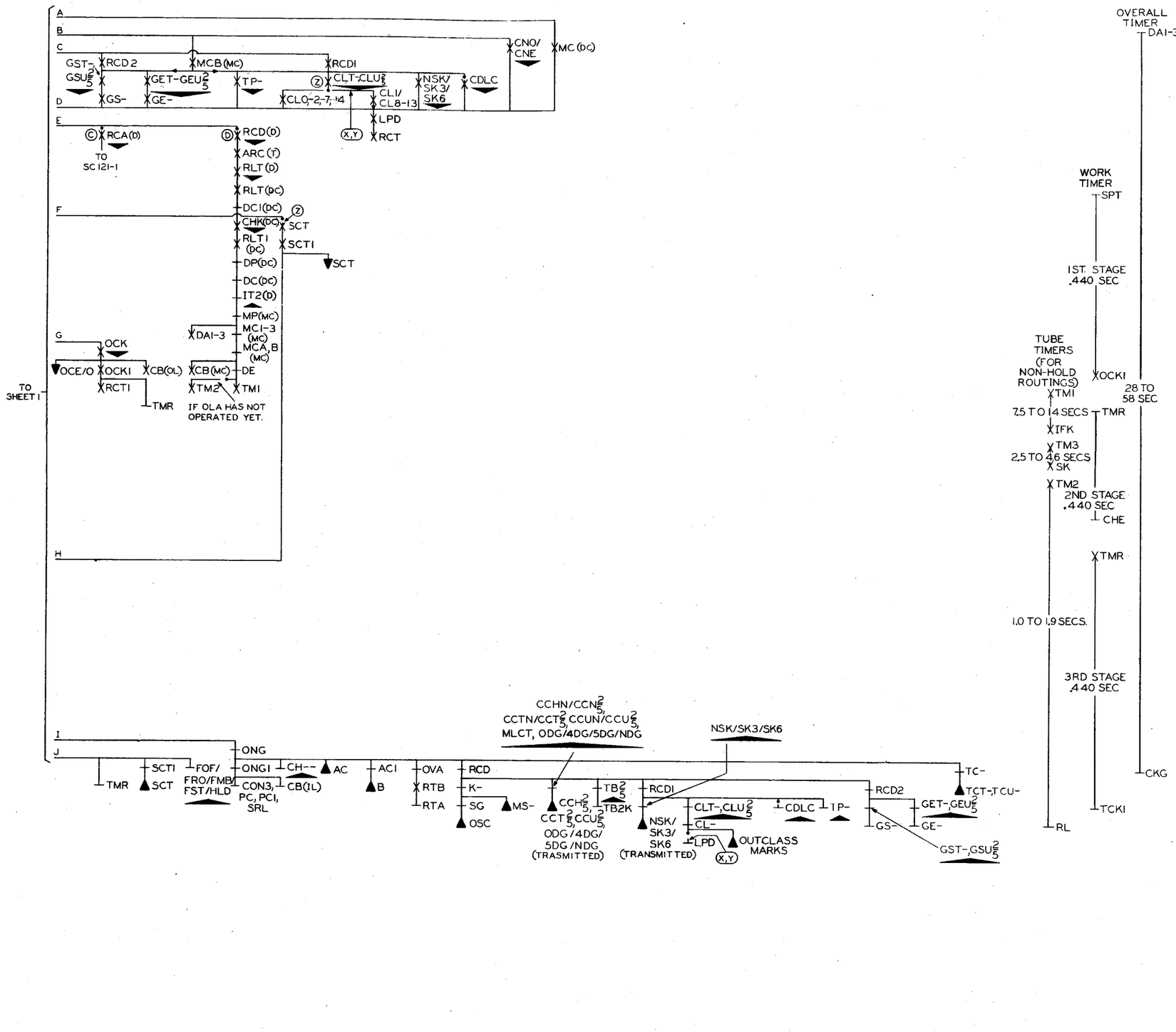

NOTES:

1.

SC OPTION	FEATURE OR OPTION	SD OPTION	SD
A	WHEN 7 TO 18 TRUNK BLOCK CONNECTORS ARE REQUIRED.	Y&Z	68395-01
B	WHEN 19 TO 30 TRUNK BLOCK CONNECTORS ARE REQUIRED.	X&Y	
C	HLD ROUTING REGISTERED.		
D	NON-HOLD ROUTING REGISTERED.		
E	IDLE TRUNK AVAILABLE		68388-01
F	ALL TRUNKS BUSY		
X	FOR COMBINED MARKERS	X	
Y	FOR TOLL COMPLETING MARKERS	Y	
Z	FOR INTERTOLL MARKERS	Z	

2. PRINCIPAL ASSUMPTIONS USED:
   1. INCOMING SECONDARIES PAIRED.
   2. OUTGOING PRIMARIES ARE NOT PAIRED.
   3. RTA RELAY LEFT OPERATED FROM PREVIOUS CALL.
   4. NO JUNCTOR PATTERNS REQUIRED.
   5. 21-40 INCOMING AND OUTGOING FRAMES USED.
   6. NOT A REORDER, MASTER BUSY OR STUCK SENDER INDICATION CALL.
   7. CONTINUITY TEST IS MADE (LOOP OR SIMPLEX).

DECODER CKT.	SD-68340-01	ISS. 2
DECODER CONNECTOR CKT.	SD-68339-01	ISS. 2
INCOMING LINK AND CONNECTOR CKT.	SD-68393-01	ISS. 5
INCOMING SENDER CKT. DP	SD-68221-01	ISS. 12
INCOMING SENDER CKT. MF	SD-68222-01	ISS. 12
*MARKER CKT.	SD-68388-01	ISS. 2
MARKER CONNECTOR CKT.	SD-68395-01	ISS. 2
OUTGOING LINK AND CONNECTOR CKT.	SD-68394-01	ISS. 4
TRUNK BLOCK CONNECTOR CKT.	SD-68027-01	ISS. 16

ISSUE	1	A.T.&T.
DATE	10-1-51	

MARKER
ESTABLISHING CONNECTION

NO. 4A TOLL

2 SHEETS, SHEET 2

SC 122-1

BELL TELEPHONE LABORATORIES, INC.
PRINTED IN U. S. A.
ORDER AS BSP ITEM MP-11709

MP-11683

ISSUE	DATE	REVISED BY
1	6-15-51	

NOTES:
1. FOR CKT. REFERENCES SEE OS 221-1.
2. FOR RELEASE OF THIS BUILT-UP CONNECTION SEE OS 221-1, SHEET 3.

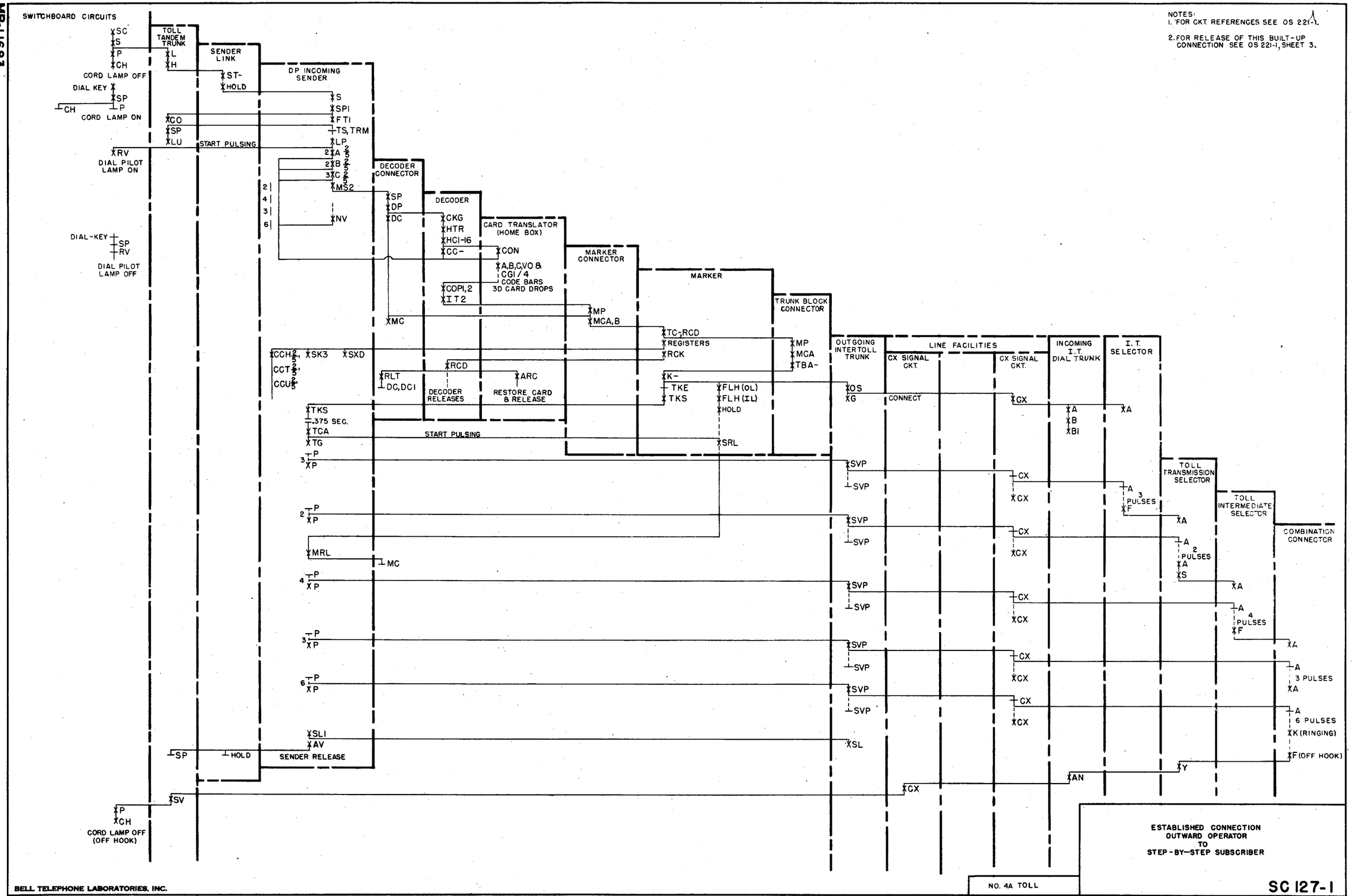

BELL TELEPHONE LABORATORIES, INC.

PRINTED IN U. S. A.

SC 127-1

ORDER AS BSP ITEM MP-11683

MP-11752

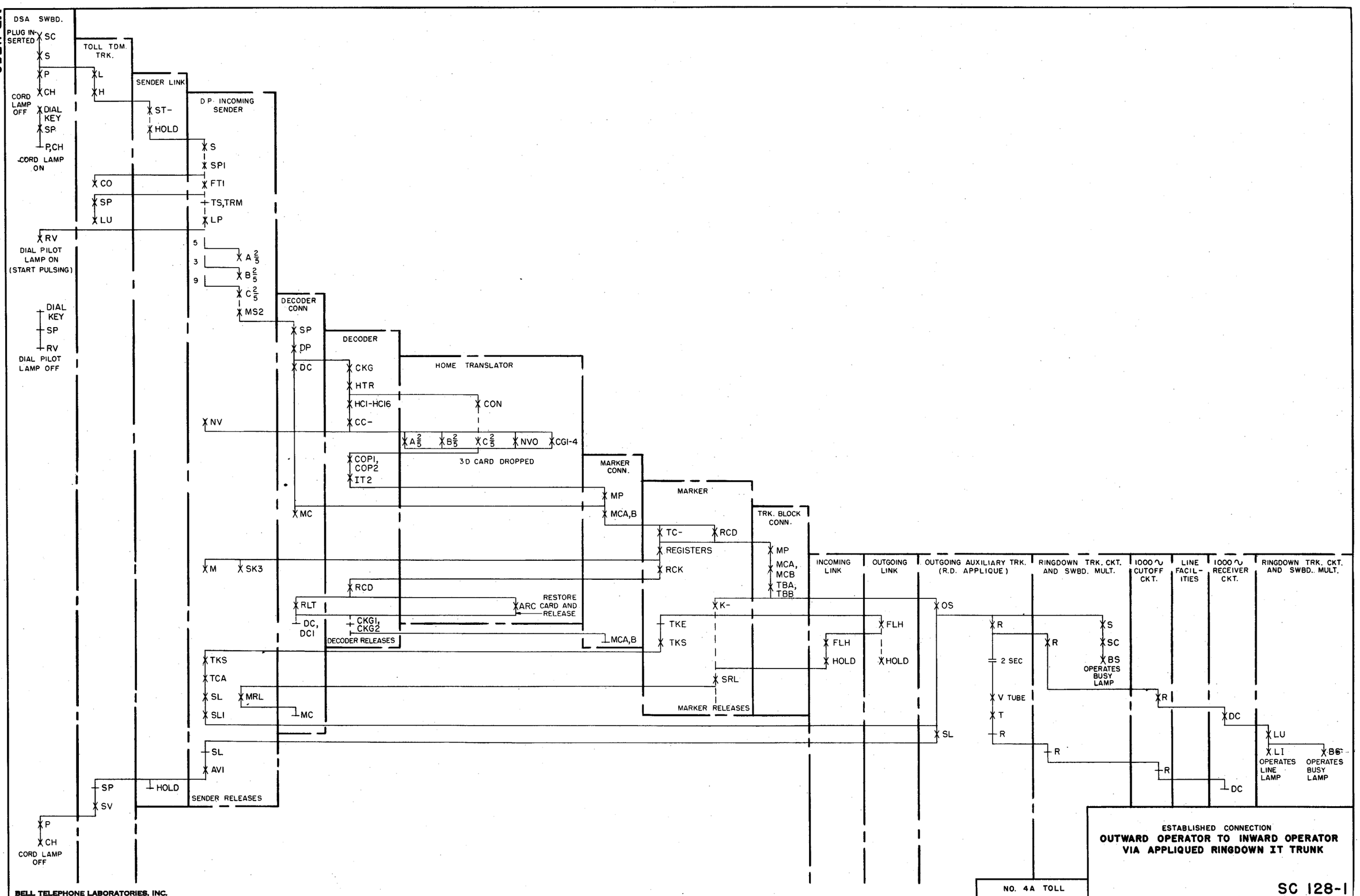

ESTABLISHED CONNECTION
OUTWARD OPERATOR TO INWARD OPERATOR VIA APPLIQUED RINGDOWN IT TRUNK

SC 128-1

ISSUE	
DATE	1
12-12-51	A.E.H. R.E.B.

BELL TELEPHONE LABORATORIES, INC.
PRINTED IN U. S. A.
ORDER AS BSP ITEM MP-11752

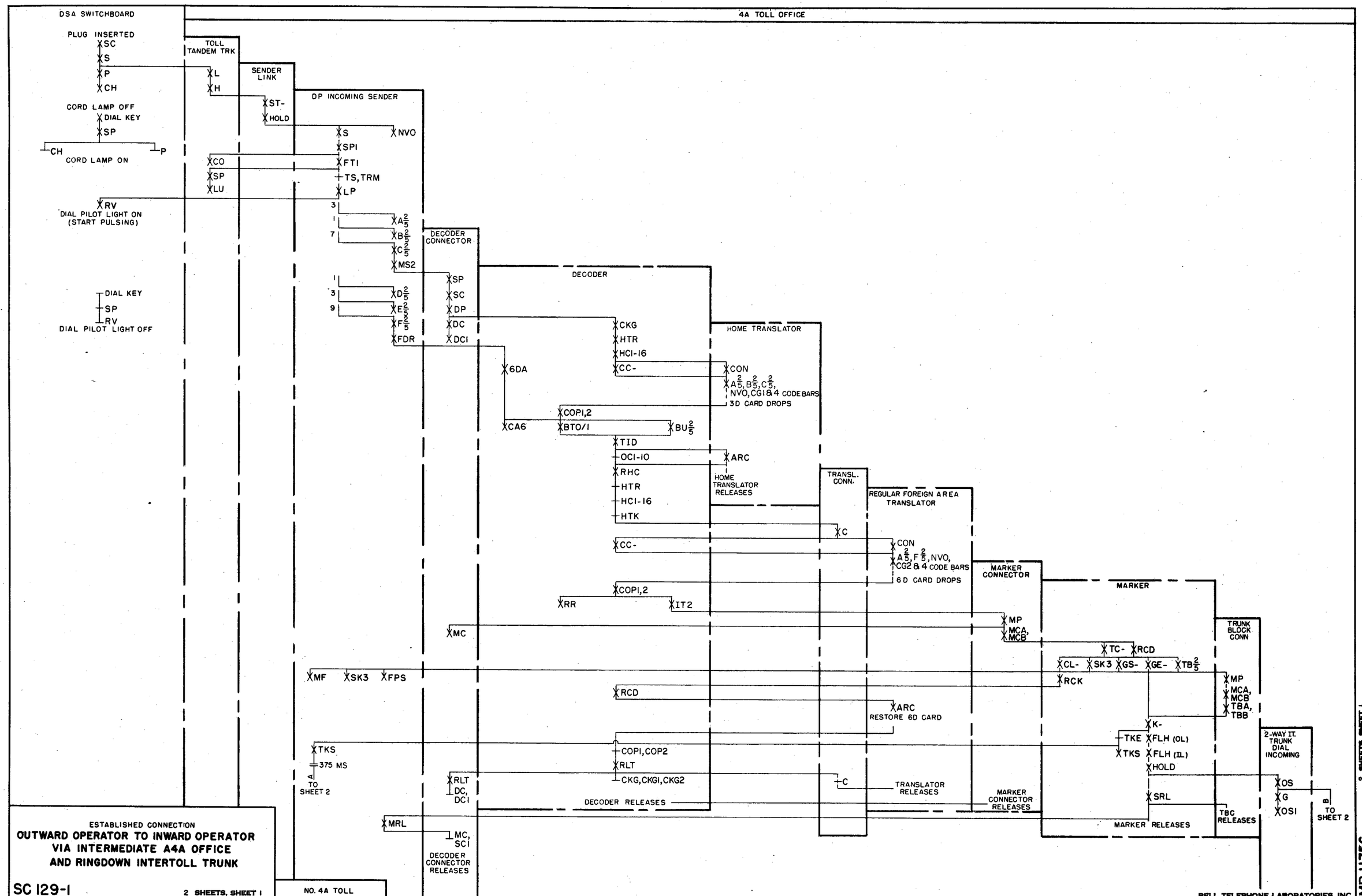

ORDER AS BSP ITEM MP-11756

PRINTED IN U. S. A.

MP-11756

2 SHEETS, SHEET 2

ISSUE	1	A.E.R.
DATE	12-12-47	

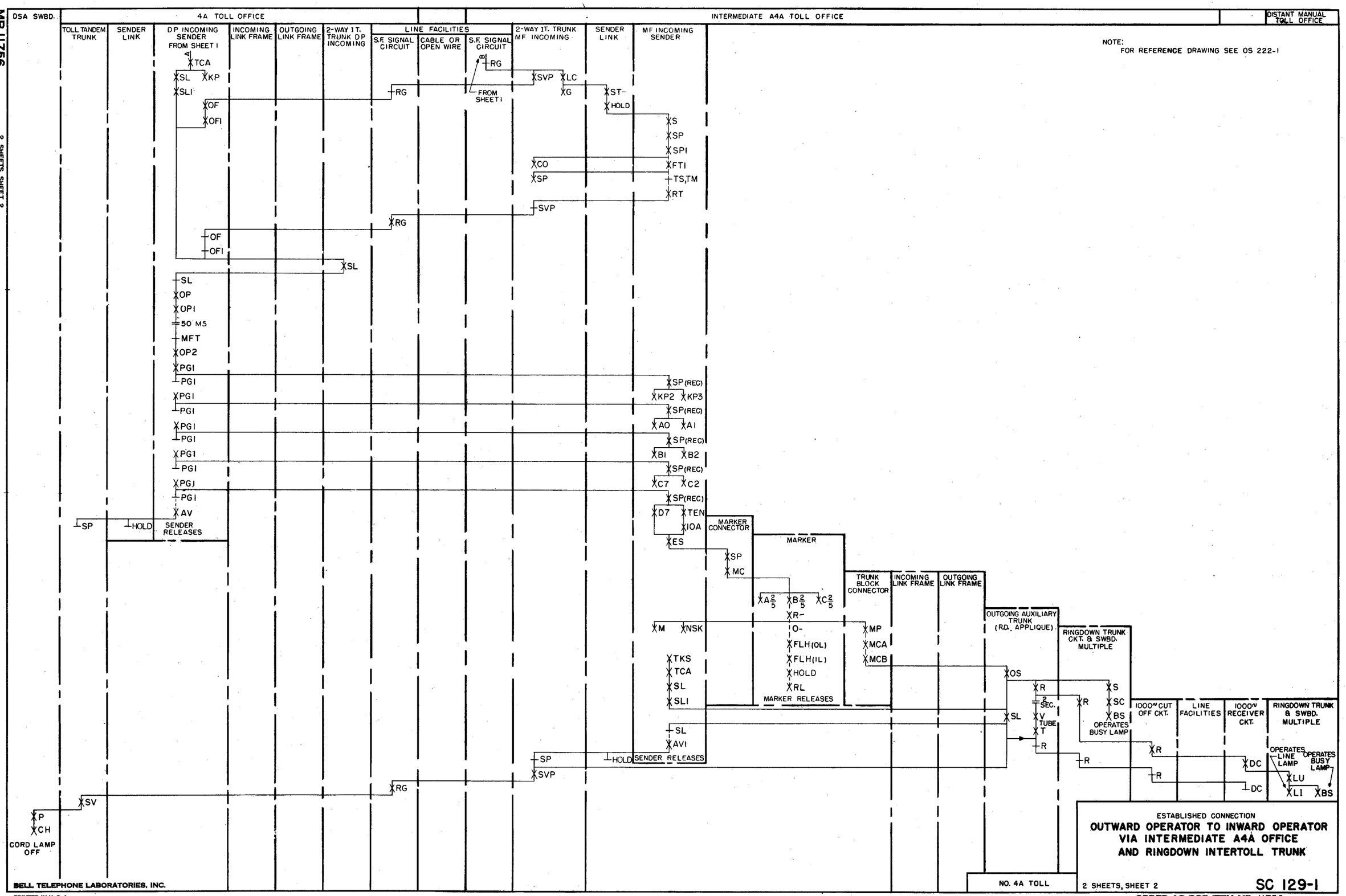

BELL TELEPHONE LABORATORIES, INC.
PRINTED IN U. S. A.
ORDER AS BSP ITEM MP-11756

MP-11761

ISSUE	DATE
1	12-26-61

SENDER OPERATIONS ON CALLS ABANDONED AFTER OPERATION OF CLO RELAY IN LINK CONNECTOR AND UP TO OPERATION OF SP RELAY IN INCOMING TRUNK

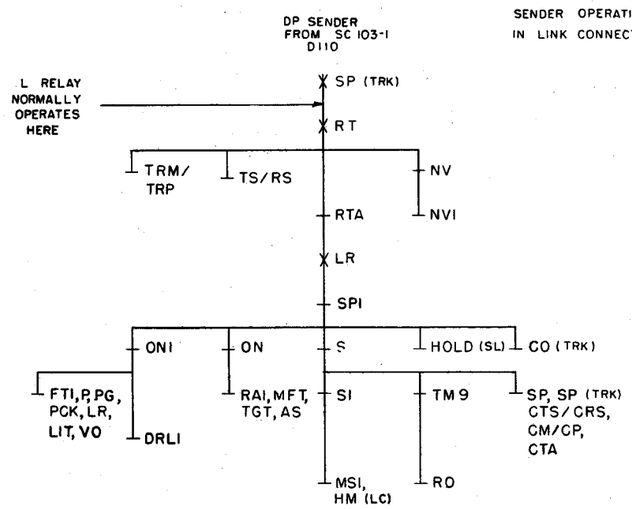

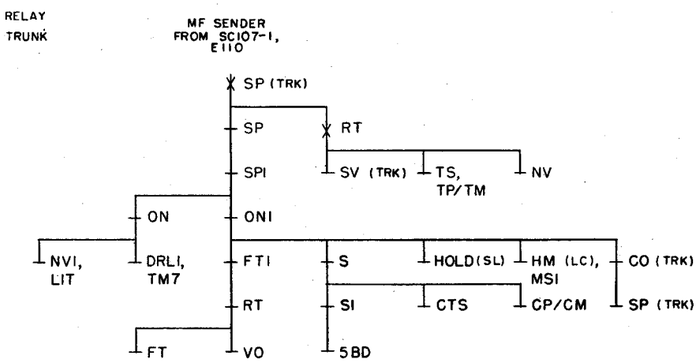

SENDER OPERATIONS ON CALLS ABANDONED AFTER OPERATION OF SP RELAY IN INCOMING TRUNK AND UP TO DECODER SEIZURE

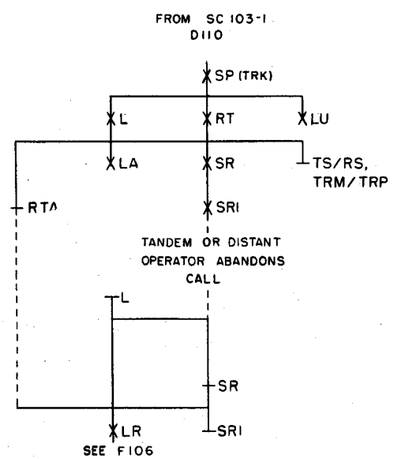

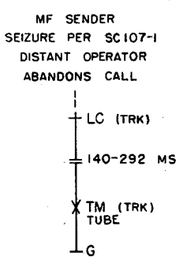

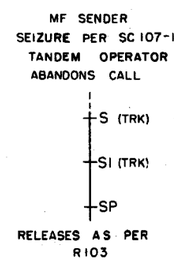

INCOMING SENDER CKT.-DP.	SD-68221-01,	ISS .12
INCOMING SENDER CKT.-MF.	SD-68222-01,	ISS .12
TANDEM TRUNK CKT.	SD-68315-01,	ISS .7
2-WAY INTERTOLL TRUNK CKT.-DP	SD-68232-01	ISS .9
2-WAY INTERTOLL TRUNK CKT.-MF	SD-68233-01	ISS .11

ABANDONED CALLS

MF & DP SENDERS

NO. 4A TOLL

SC 130-1

BELL TELEPHONE LABORATORIES, INC.

PRINTED IN U. S. A.

ORDER AS BSP ITEM MP— 11761

MP- 10378

ISSUE	1	2
DATE	11-24-50	

MASTER LEGEND FOR OPERATIONAL SKETCHES

THE SYMBOLS AND CONVENTIONS USED ON OPERATIONAL SKETCHES (OS-) ARE THE SAME AS THOSE USED ON THE STANDARD CIRCUIT SCHEMATIC DRAWINGS (SD-) WITH THE FOLLOWING EXCEPTIONS:

1. ATTACHED CONTACTS MAY BE POSITIONED WITHOUT REGARD TO THEIR TOP OR BOTTOM LOCATIONS AS:

2. DETACHED CONTACT SYMBOLS ARE USED WHENEVER THEY AID IN SIMPLIFYING THE SKETCHES. THEY ARE SHOWN THUS:

(A) MAKE CONTACTS:

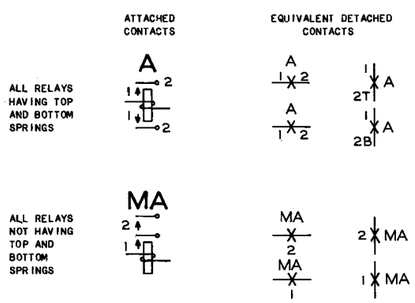

(B) BREAK CONTACTS:

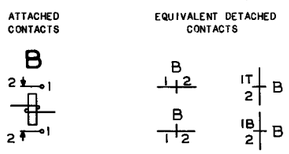

(C) TRANSFER CONTACTS:

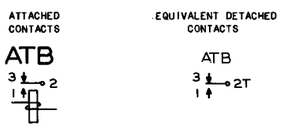

(D) OTHER CONTACTS:

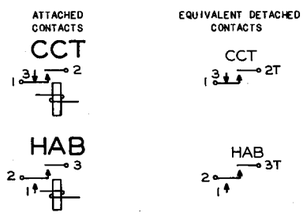

(E) JACK WITH MAKE CONTACTS:

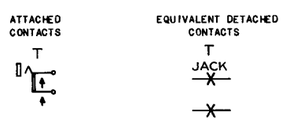

(F) JACK WITH BREAK CONTACTS:

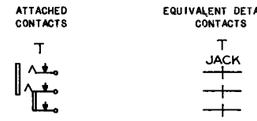

(G) LOCKING KEY WITH MAKE CONTACTS:

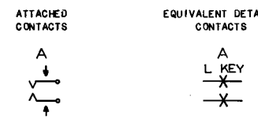

(H) NON-LOCKING KEY WITH BREAK CONTACT:

(J) CROSSBAR SELECTOR-TYPE SWITCH:

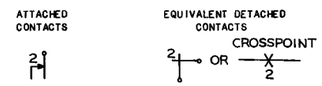

(K) READER INTERRUPTER CONTACT:

(L) TIMER CONTACT:

(M) 206 AND SIMILAR TYPE SELECTORS:

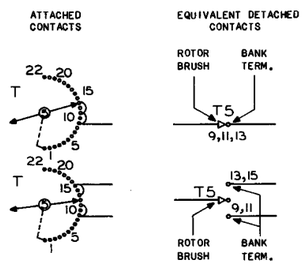

(N) WAFER SWITCH:

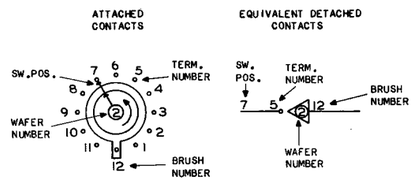

3. CONTACT DESIGNATION:

(A)

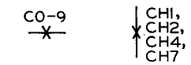

EXPLANATION:

THE MAKE CONTACTS (ONE EACH) ON RELAYS CO TO C9 OR ON RELAYS CH1, CH2, CH4, AND CH7 ARE WIRED IN PARALLEL.

(B)

A MAKE CONTACT ON ONE OF A GROUP OF LC RELAYS ALL OF WHICH ARE WIRED IN A SIMILAR MANNER.

4. WINDING DESIGNATION:

(A)

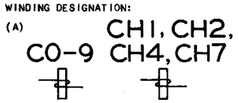

EXPLANATION:

RELAYS CO TO C9 OR RELAYS CH1, CH2, CH4, AND CH7 ARE WIRED IN A SIMILAR MANNER.

(B)

ONE OF A GROUP OF LC RELAYS ALL OF WHICH ARE WIRED IN A SIMILAR MANNER.

5. BATTERY SYMBOL WITH THE NOMINAL VOLTAGE IS SHOWN THUS:

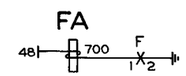

6. TROUBLE RECORD PUNCHES (OR LAMPS) ARE SHOWN BY A CIRCLE ENCLOSING THE PUNCH (OR LAMP) DESIGNATION. FOR EXAMPLE:

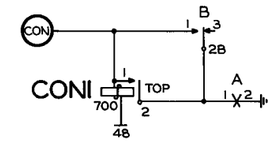

7. IN GENERAL THE OHMS SYMBOL (Ω) USED ON CIRCUIT SCHEMATIC DRAWINGS IS OMITTED.

8. IN GENERAL, STRAPPING OR MULTIPLE CONVENTIONS ARE OMITTED.

9. CONTACT PROTECTION IS GENERALLY OMITTED.

10. APPARATUS CODES FOR VACUUM TUBES ONLY ARE SHOWN.

11. INDICATION OF INNER ENDS AND TERMINAL NUMBERING OF WINDINGS ARE OMITTED. HOWEVER ON POLAR RELAYS, WINDING TERMINAL NUMBERS AND POLARIZATION ARE SHOWN.

12. POLAR RELAYS WITH BIASING SPRINGS ARE INDICATED BY BS FOLLOWING THE RELAY DESIGNATION.
POLAR RELAYS WITHOUT BIASING SPRINGS ARE INDICATED BY NBS FOLLOWING THE RELAY DESIGNATION.

13. SEQUENCE CHARTS ON OPERATIONAL SKETCHES:
(A) SEQUENCE CHARTS ARE GENERALLY PROVIDED ON EACH OS. THESE DIFFER FROM THE SC'S MADE FOR A COMPLETE JOB OR CALL IN THE FOLLOWING MANNER
1) ONLY A SUFFICIENT NUMBER OF RELAY MOVEMENTS ARE SHOWN WHICH PERMIT PROPER UNDERSTANDING OF THE OPERATING PATHS APPEARING ON THE OS.
2) THE DESIGNATIONS OF ALL APPARATUS FOR WHICH THE OPERATING PATHS ARE SHOWN ON THE OS ARE INDICATED LARGER AND HEAVIER THAN DESIGNATIONS IDENTIFYING OTHER APPARATUS.
3) PUNCH DESIGNATIONS ARE OMITTED.
4) COORDINATES ARE OMITTED.

(B) EXAMPLE:

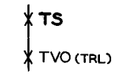

EXPLANATION:

THE CIRCUIT MOST FREQUENTLY USED IN A PARTICULAR SEQUENCE CHART IS IDENTIFIED BY AN ASTERISK OPPOSITE ITS SD NUMBER IN THE LIST OF DRAWINGS ABOVE THE TITLE BLOCK. NO CIRCUIT ABBREVIATIONS ARE SHOWN ON THE SEQUENCE CHART NEXT TO RELAYS ASSOCIATED WITH THIS CIRCUIT. THE CIRCUITS IN WHICH ALL OTHER RELAYS APPEAR ARE SHOWN IN BRACKETS ADJACENT TO THE RELAY DESIGNATIONS ON THE SEQUENCE CHART (SEE EXAMPLE).

TRANSLATOR CKT. SD-25802-01, ISS. 3
*TRANSVERTER CKT. SD-25754-01, ISS. 8

14. OPTIONS ARE DESCRIBED BY A NOTE AS SHOWN BELOW:

NOTE:

1.

OS OPTION	FEATURE OR OPTION	SD OPTION	SD
A	OPERATION WITH INTERTOLL AND TWO-WAY TRUNKS	N	25579-01
B	NO OPERATION WITH INTERTOLL AND TWO-WAY TRUNKS	LOOPED LEADS	
E	WHEN AMA IS PROVIDED	FIG. 4	25579-01
F		ZY AND FIG. 12	

THIS NOTE IS INTERPRETED IN THE FOLLOWING MANNER:

(A) THE OS OPTION COLUMN LISTS THE LETTERS ARBITRARILY ASSIGNED TO FEATURES OR OPTIONS SHOWN ON THE PARTICULAR OS.

(B) THE FEATURE OR OPTION COLUMN BRIEFLY DESCRIBES THE FEATURES OR OPTIONS SPECIFIED ON THE OS.

(C) THE SD OPTION COLUMN LISTS THE SD OPTIONS CORRESPONDING TO THE OS OPTIONS WHEN APPLICABLE. THESE OPTIONS ARE ON THE PARTICULAR ISSUE OF THE SD LISTED OVER THE TITLE BOX ON THE OS. IN SOME CASES, MORE THAN ONE OPTION MAY BE SHOWN FOR A PARTICULAR FEATURE (SEE OS OPTIONS E AND F). THESE USUALLY RESULT FROM IMPROVEMENTS INCORPORATED ON B OR D ISSUES OF THE ASSOCIATED SD. THE OPTIONS LISTED MAY NOT APPEAR ON EARLIER ISSUES OF THE SD. IF THEY DO NOT APPEAR ON THE SD ISSUE AVAILABLE IN THE OFFICE, IT WILL BE NECESSARY TO DETERMINE BY COMPARISON OF THE CIRCUIT ARRANGEMENTS ON THE OS AND SD AVAILABLE WHICH OPTIONS ARE INSTALLED. IF THEY DO APPEAR ON THE SD AVAILABLE, THE OPTIONS INSTALLED CAN BE DETERMINED FROM THE OFFICE WIRING LISTS OR FROM THE RECORD OF FIGURES, WIRING AND APPARATUS CHANGES ON THE SD.

(D) THE SD COLUMN LISTS THE SD NUMBER ON WHICH THE OPTIONS DESCRIBED IN (C) APPEAR.

MASTER LEGEND FOR OPERATIONAL SKETCHES

OS 000-2

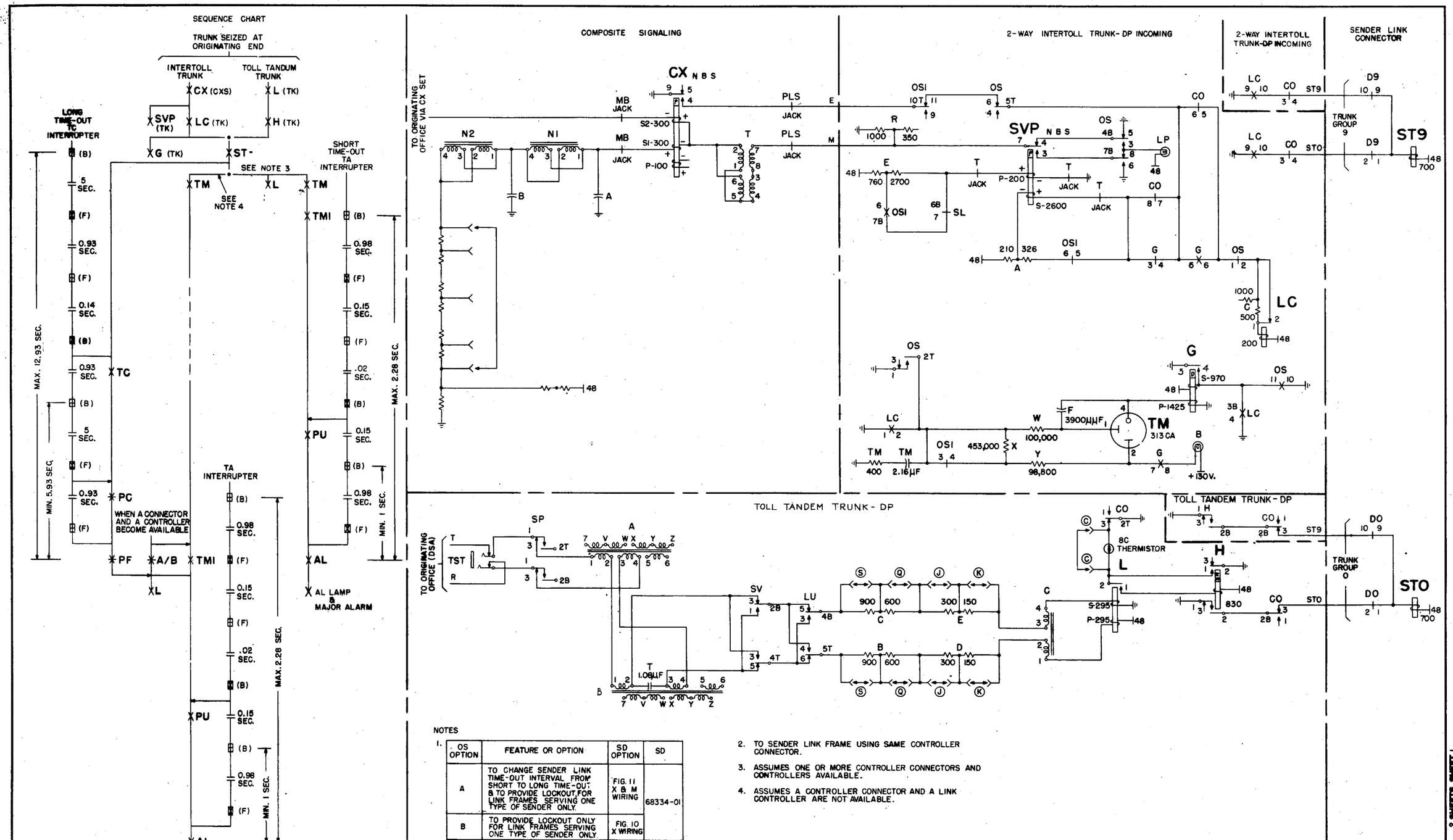

NOTES

1.

OS OPTION	FEATURE OR OPTION	SD OPTION	SD
A	TO CHANGE SENDER LINK TIME-OUT INTERVAL FROM SHORT TO LONG TIME-OUT & TO PROVIDE LOCKOUT FOR LINK FRAMES SERVING ONE TYPE OF SENDER ONLY.	FIG. 11 X B M WIRING	68334-01
B	TO PROVIDE LOCKOUT ONLY FOR LINK FRAMES SERVING ONE TYPE OF SENDER ONLY.	FIG. 10 X WIRING	
C	WHEN TRUNK CABLE CONDUCTORS ARE LESS THAN FIVE MILES IN LENGTH.	Z A	68315-01
S,Q,J,K	TO REGULATE TRUNK RESISTANCE.	S,Q,J,K WIRING	

2. TO SENDER LINK FRAME USING SAME CONTROLLER CONNECTOR.

3. ASSUMES ONE OR MORE CONTROLLER CONNECTORS AND CONTROLLERS AVAILABLE.

4. ASSUMES A CONTROLLER CONNECTOR AND A LINK CONTROLLER ARE NOT AVAILABLE.

SENDER LINK AND CONNECTOR

TRUNK START AND CONTROLLER CONNECTOR PREFERENCE

OS 101-1 — 2 SHEETS, SHEET 1

NO. 4A TOLL

ORDER AS BSP ITEM MP- 11612

ISSUE 1 — DATE 6-18-51

2 SHEETS, SHEET 1

MP-11612

BELL TELEPHONE LABORATORIES, INC.

PRINTED IN U. S. A.

MP- 11612 2 SHEETS, SHEET 2

ISSUE	DATE
1	6-18-57

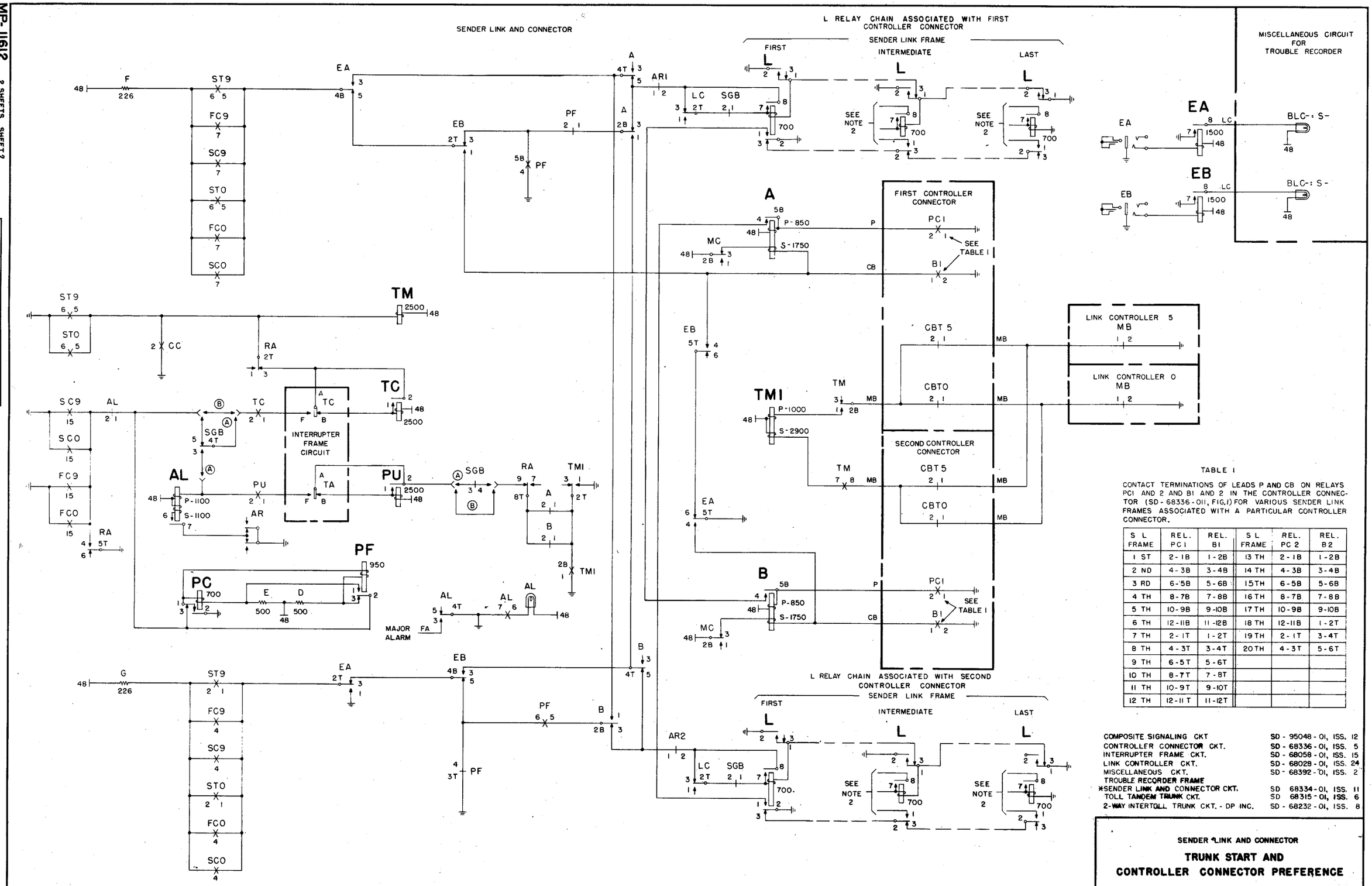

TABLE I

CONTACT TERMINATIONS OF LEADS P AND CB ON RELAYS PCI AND 2 AND BI AND 2 IN THE CONTROLLER CONNECTOR (SD-68336-011, FIG.1) FOR VARIOUS SENDER LINK FRAMES ASSOCIATED WITH A PARTICULAR CONTROLLER CONNECTOR.

S L FRAME	REL. PC I	REL. BI	S L FRAME	REL. PC 2	REL. B2
1 ST	2-1B	1-2B	13 TH	2-1B	1-2B
2 ND	4-3B	3-4B	14 TH	4-3B	3-4B
3 RD	6-5B	5-6B	15 TH	6-5B	5-6B
4 TH	8-7B	7-8B	16 TH	8-7B	7-8B
5 TH	10-9B	9-10B	17 TH	10-9B	9-10B
6 TH	12-11B	11-12B	18 TH	12-11B	1-2T
7 TH	2-1T	1-2T	19 TH	2-1T	3-4T
8 TH	4-3T	3-4T	20 TH	4-3T	5-6T
9 TH	6-5T	5-6T			
10 TH	8-7T	7-8T			
11 TH	10-9T	9-10T			
12 TH	12-11T	11-12T			

COMPOSITE SIGNALING CKT	SD - 95048 - 01, ISS. 12
CONTROLLER CONNECTOR CKT.	SD - 68336 - 01, ISS. 5
INTERRUPTER FRAME CKT.	SD - 68058 - 01, ISS. 15
LINK CONTROLLER CKT.	SD - 68028 - 01, ISS. 24
MISCELLANEOUS CKT.	SD - 68392 - 01, ISS. 2
TROUBLE RECORDER FRAME	
*SENDER LINK AND CONNECTOR CKT.	SD 68334 - 01, ISS. 11
TOLL TANDEM TRUNK CKT.	SD 68315 - 01, ISS. 6
2-WAY INTERTOLL TRUNK CKT. - DP INC.	SD - 68232 - 01, ISS. 8

SENDER LINK AND CONNECTOR

TRUNK START AND CONTROLLER CONNECTOR PREFERENCE

NO. 4A TOLL

2 SHEETS, SHEET 2

OS 101-1

BELL TELEPHONE LABORATORIES, INC.
PRINTED IN U. S. A.
ORDER AS BSP ITEM MP- 11612

MP-11613

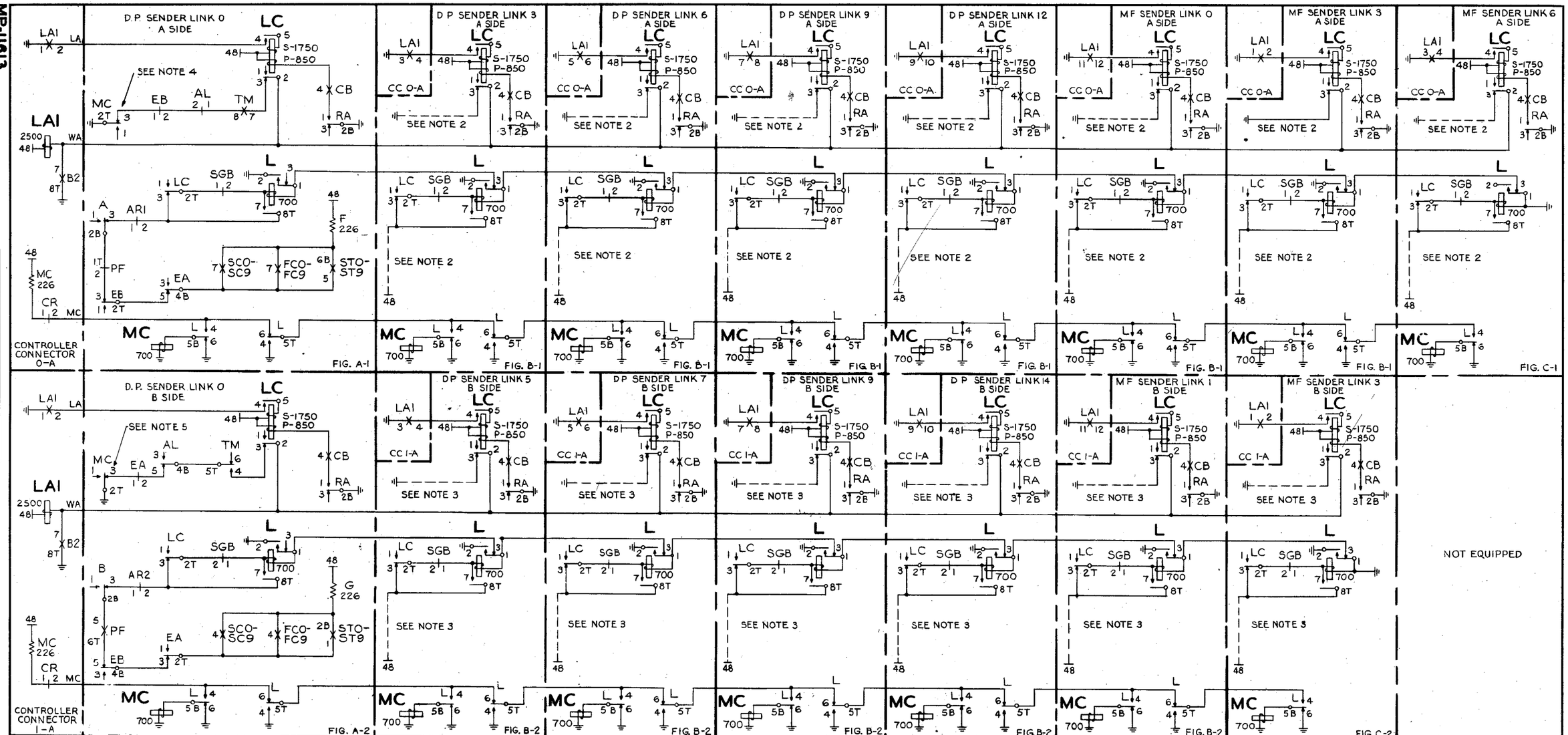

CONT. CONN.	D P SENDER LINK	FIGURE	DP SENDER LINK	FIGURE	DP SENDER LINK	FIGURE	DP SENDER LINK	FIGURE	SENDER LINK	FIGURE	MF SENDER LINK	FIGURE	MF SENDER LINK	FIGURE	MF SENDER LINK	FIGURE
2-A	1	A-1	4	B-1	7	B-1	10	B-1	DP 13	B-1	1	B-1	4	B-1	7	C-1
3-A	1	A-2	3	B-2	8	B-2	10	B-2	DP 12	B-2	2	B-2	4	B-2	6	C-2
4-A	2	A-1	5	B-1	8	B-1	11	B-1	DP 14	B-1	2	B-1	5	C-1	NOT EQUIPPED	
5-A	2	A-2	4	B-2	6	B-2	11	B-2	DP 13	B-2	0	B-2	5	B-2	7	C-2
0-B	15	A-1	18	B-1	21	B-1	24	B-1	DP 27	B-1	8	B-1	11	B-1	14	C-1
1-B	15	A-2	20	B-2	22	B-2	24	B-2	DP 29	B-2	9	B-2	11	C-2	NOT EQUIPPED	
2-B	16	A-1	19	B-1	22	B-1	25	B-1	DP 28	B-1	9	B-1	12	B-1	15	C-1
3-B	16	A-2	18	B-2	23	B-2	25	B-2	DP 27	B-2	10	B-2	12	B-2	14	C-2
4-B	17	A-1	20	B-1	23	B-1	26	B-1	DP 29	B-1	10	B-1	13	C-1	NOT EQUIPPED	
5-B	17	A-2	19	B-2	21	B-2	26	B-2	DP 28	B-2	8	B-2	13	B-2	15	C-2
0-C	30	A-1	33	B-1	36	B-1	39	B-1	DP 42	B-1	17	B-1	20	B-1	23	C-1
1-C	30	A-2	35	B-2	37	B-2	39	B-2	MF 16	B-2	18	B-2	20	C-2	NOT EQUIPPED	
2-C	31	A-1	34	B-1	37	B-1	40	B-1	DP 43	B-1	18	B-1	21	B-1	24	C-1
3-C	31	A-2	33	B-2	38	B-2	40	B-2	DP 42	B-2	19	B-2	21	B-2	23	C-2
4-C	32	A-1	35	B-1	38	B-1	41	B-1	MF 16	B-1	19	B-1	22	C-1	NOT EQUIPPED	
5-C	32	A-2	34	B-2	36	B-2	41	B-2	DP 43	B-2	17	B-2	22	B-2	24	C-2

NOTES:

1. PREFERENCE CHAIN IS ARRANGED FOR 44 DP SENDER LINK AND 25 MF SENDER LINK SERVED BY 18 CONTROLLER CONNECTORS IN 3 GROUPS OF 6 EACH. EACH GROUP IS SERVED BY 6 LINK CONTROLLERS.
2. THROUGH SAME SEQUENCE AS DP SENDER LINK 0 FOR CONTROLLER CONNECTOR 0-A.
3. THROUGH SAME SEQUENCE AS DP SENDER LINK 0 FOR CONTROLLER CONNECTOR 1-A.
4. THROUGH CONTACTS OF MC RELAY ASSOCIATED WITH THE SECOND OR "B" SIDE OF THE SDR. LINK FRAME.
5. THROUGH CONTACTS OF MC RELAY ASSOCIATED WITH THE FIRST OR "A" SIDE OF THE SDR. LINK FRAME.

CONTROLLER CONNECTOR CKT. SD-68336-01, ISS. 5
SENDER LINK AND CONNECTOR CKT. SD-68334-01, ISS. 11

NO. 4A TOLL

SENDER LINK AND CONNECTOR
TYPICAL PREFERENCE CHAIN

OS 102-1

BELL TELEPHONE LABORATORIES, INC.
PRINTED IN U. S. A.
ORDER AS BSP ITEM MP-11613

SEQUENCE CHART

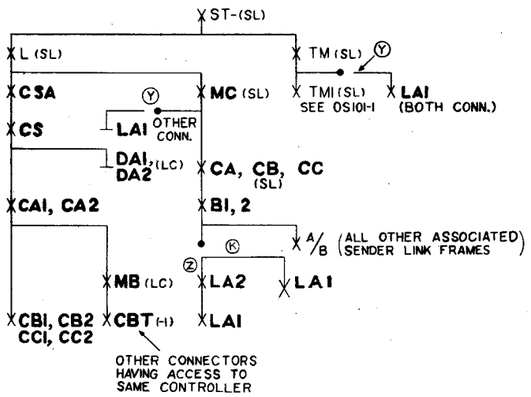

NOTES:
1. TO OTHER ASSOCIATED MC RELAYS.
2.

OS OPTION	FEATURE OR OPTION	SD OPTION	SD
Y	ACCESS REQUIRED TO TWELVE OR LESS SENDER LINK FRAMES. (MFR DISC)	Y, M	68336-01
Z	ACCESS REQUIRED TO MORE THAN TWELVE SENDER LINK FRAMES. (MFR DISC)	Z	
K	LINK FRAME TRAFFIC LOCKOUT WITH ACCESS TO 11 OR LESS FRAMES (STD)	K	

TABLE 1

CONTACT TERMINATIONS OF LEAD LA ON RELAYS LA1 & LA2 IN THE CONTROLLER CONNECTOR (SD-68336-011, FIG.1) FOR VARIOUS SENDER LINK FRAMES ASSOCIATED WITH A PARTICULAR CONTROLLER CONNECTOR.

	S.L. FR.	REL. LA1	S.L. FR.	REL. LA2
Y OR K OR Z	1 ST	2-1 B	13 TH	2-1 B
	2 ND	4-3B	14 TH	4-3B
	3 RD	6-5B	15 TH	6-5B
	4 TH	8-7B	16 TH	8-7B
	5 TH	10-9B	17 TH	10-9B
	6 TH	12-11B	18 TH	2-1 T
	7 TH	2-1 T	19 TH	4-3 T
	8 TH	4-3 T	20 TH	6-5 T
	9 TH	6-5 T	ABOVE ASSIGNMENTS Z OPTION ONLY	
	10 TH	8-7 T		
	11 TH	10-9 T		
Y & M	12 TH	12-11 T		

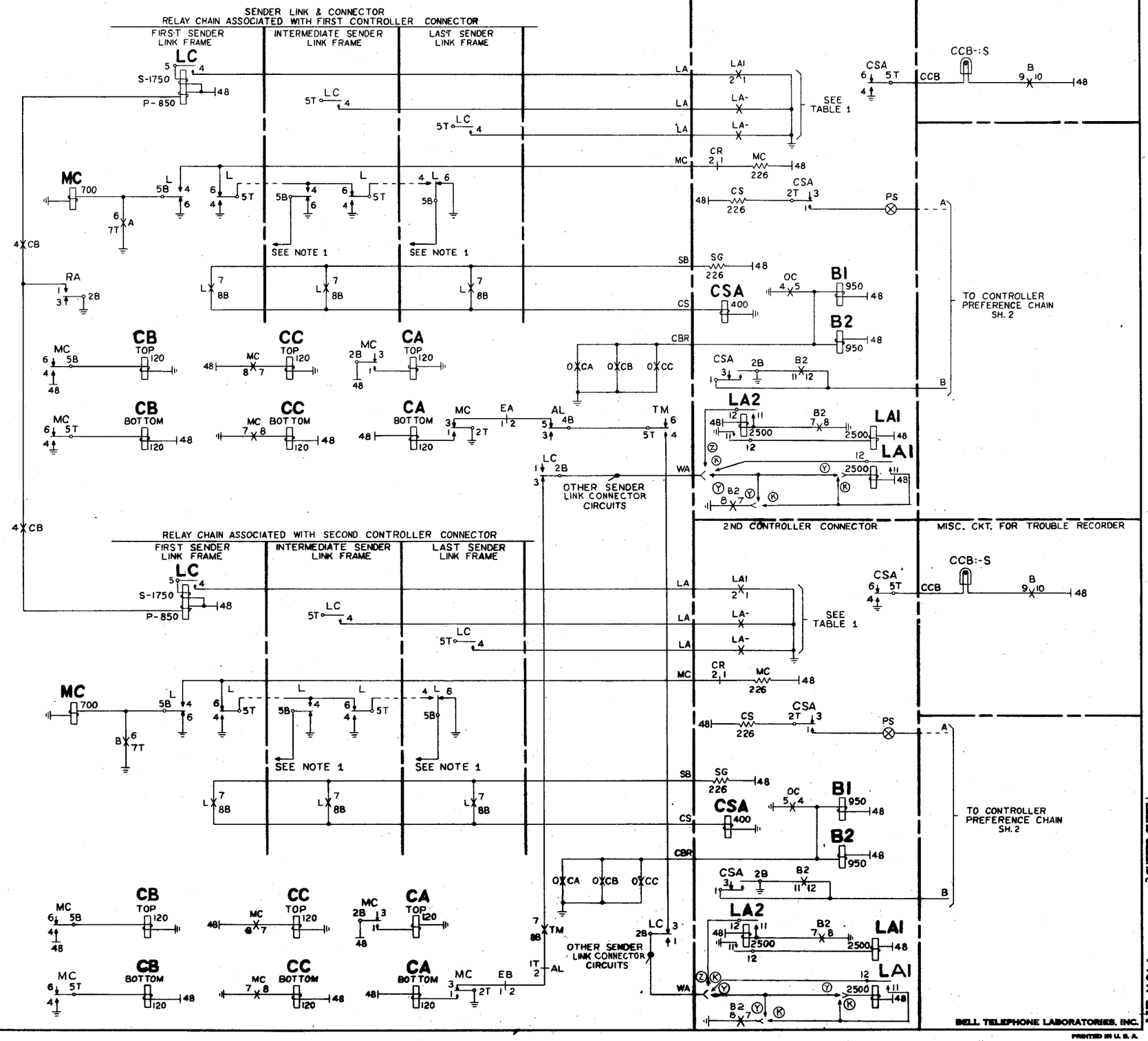

* CONTROLLER CONNECTOR CKT.	SD-68336-01, ISS.7
LINK CONTROLLER CKT.	SD-68028-01, ISS.24
MISC. CKT. FOR TROUBLE RECORDER	SD-68392-01, ISS.2
SENDER LINK AND CONNECTOR CKT.	SD-68334-01, ISS.11

CONTROLLER CONNECTOR
SEIZURE AND LINK CONTROLLER PREFERENCE

OS 103-1 — 2 SHEETS, SHEET 1 — NO. 4A TOLL

ORDER AS BSP ITEM MP-11614

BELL TELEPHONE LABORATORIES, INC.

PRINTED IN U.S.A.

MP-11614

2 SHEETS, SHEET 1

ISSUE	1	W.A.Y.
DATE		7-16-51

MP-11614

2 SHEETS, SHEET 2

ISSUE	DATE
1	7-16-51

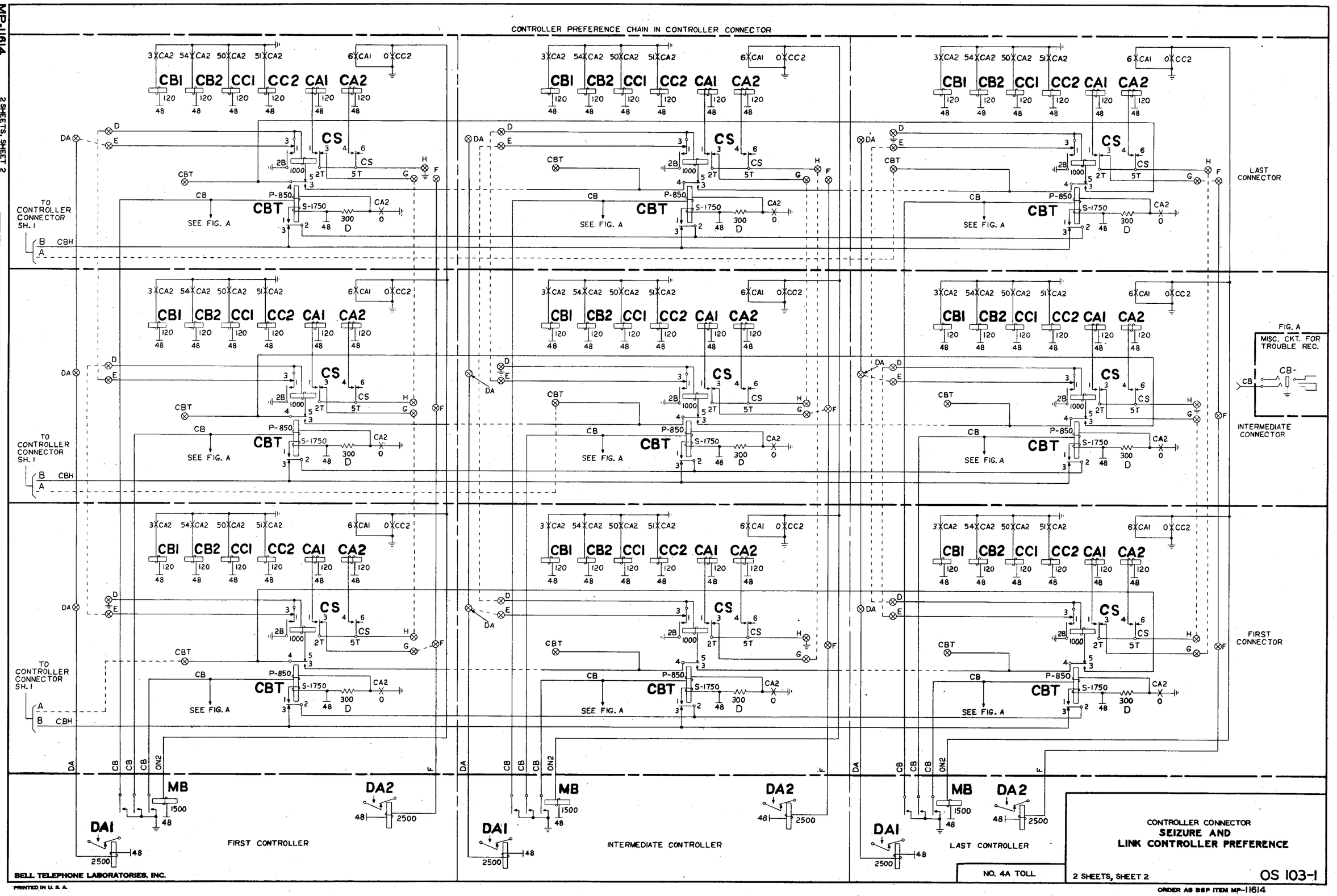

BELL TELEPHONE LABORATORIES, INC.

PRINTED IN U. S. A.

NO. 4A TOLL

CONTROLLER CONNECTOR
SEIZURE AND LINK CONTROLLER PREFERENCE

2 SHEETS, SHEET 2

OS 103-1

ORDER AS BSP ITEM MP-11614

MP-11623

ISSUE	DATE
1	5-8-51

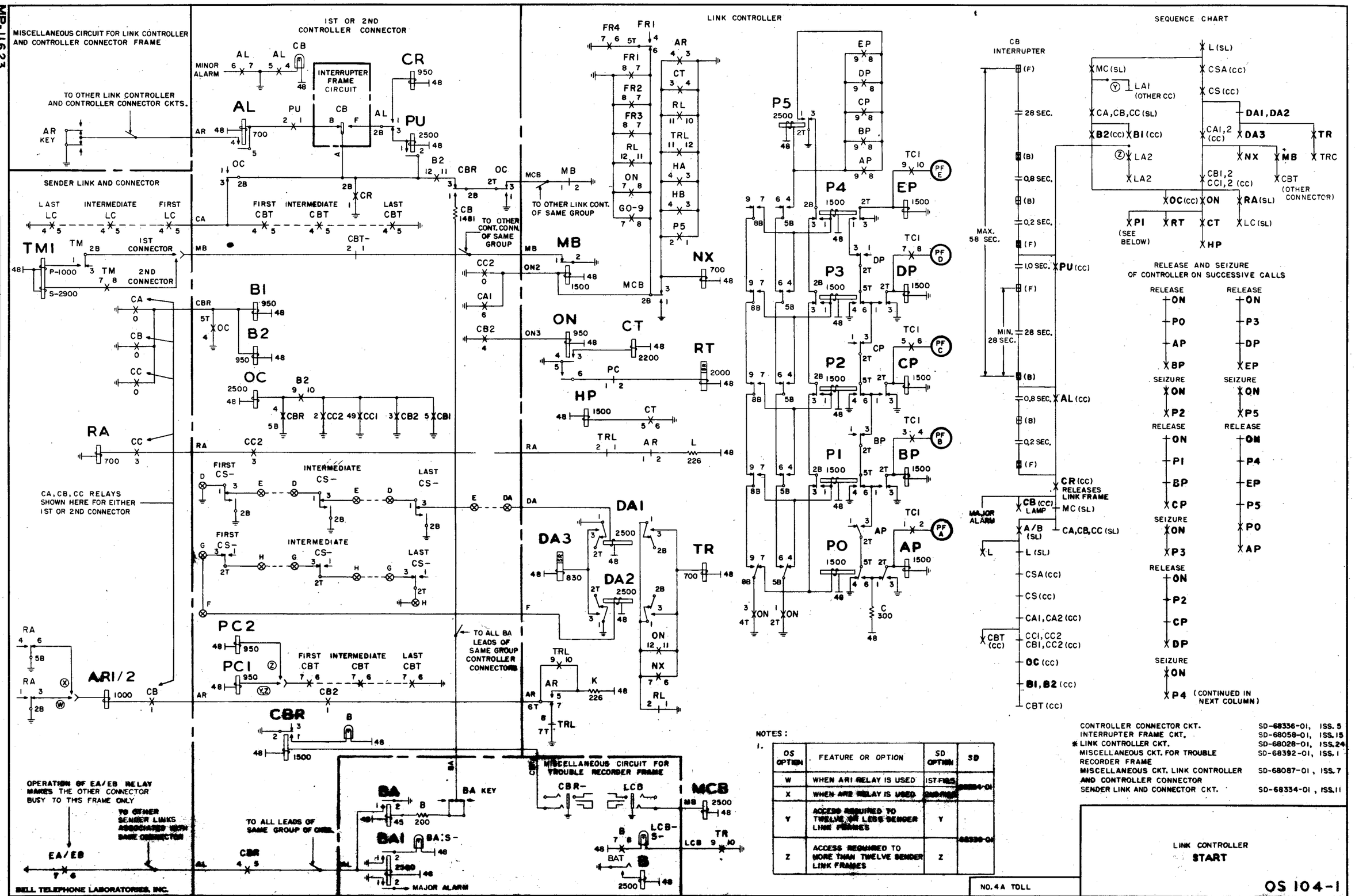

NOTES:

1.

OS OPTION	FEATURE OR OPTION	SD OPTION	SD
W	WHEN ARI RELAY IS USED	IST FRAME	68334-01
X	WHEN ARE RELAY IS USED	2ND FRAME	
Y	ACCESS REQUIRED TO TWELVE OR LESS SENDER LINK FRAMES	Y	68330-01
Z	ACCESS REQUIRED TO MORE THAN TWELVE SENDER LINK FRAMES	Z	

ORDER AS BSP ITEM MP-11623

MP-11615

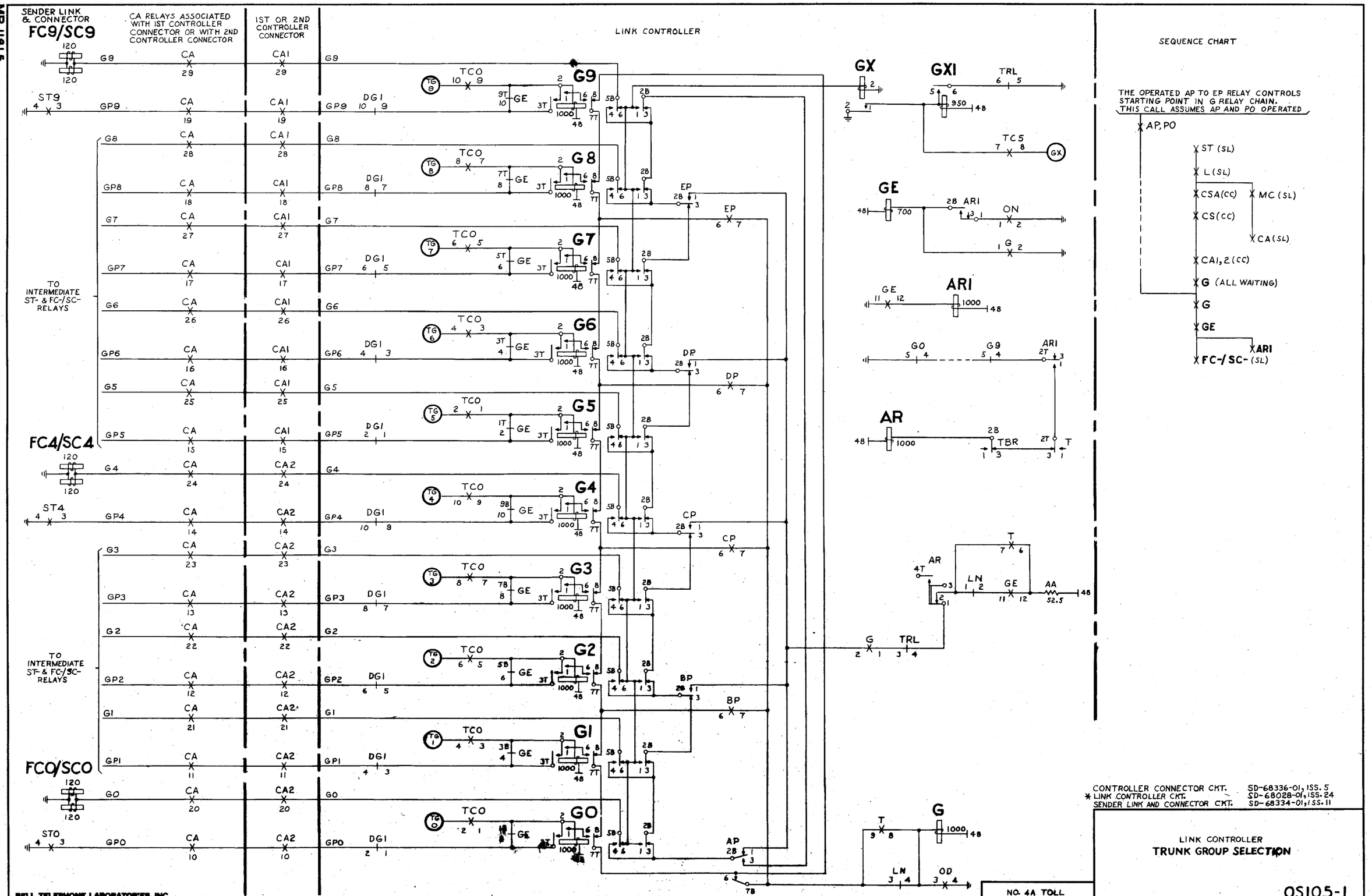

CONTROLLER CONNECTOR CKT. SD-68336-01, ISS. 5
* LINK CONTROLLER CKT. SD-68028-01, ISS. 24
SENDER LINK AND CONNECTOR CKT. SD-68334-01, ISS. 11

LINK CONTROLLER
TRUNK GROUP SELECTION

NO. 4A TOLL

OS105-1

ISSUE		
DATE	1	W.K.W. R.B.B.
8-4-57		

BELL TELEPHONE LABORATORIES, INC.
PRINTED IN U.S.A.

ORDER AS BSP ITEM MP-11615

MP-11616

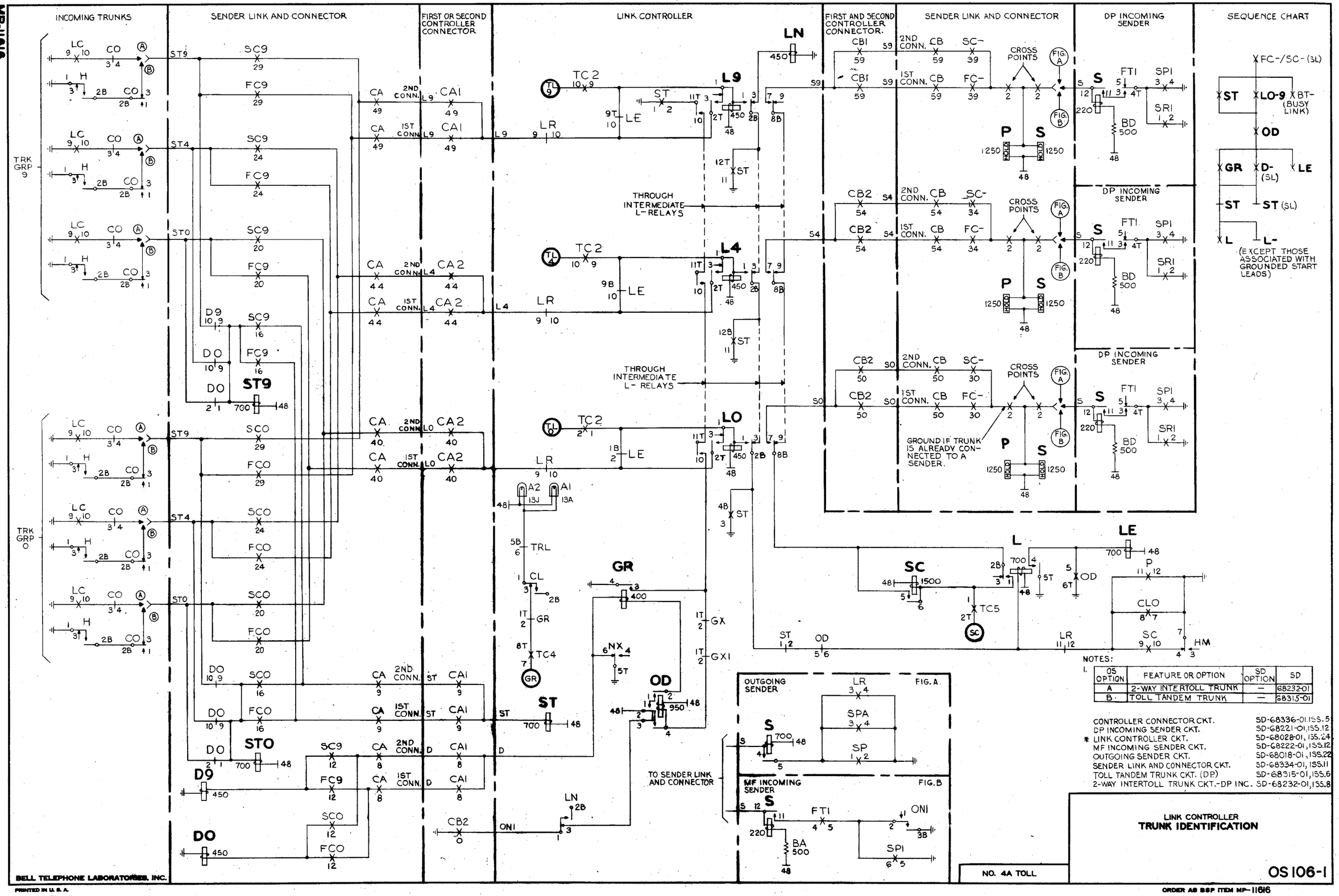

NOTES:

1.

OS OPTION	FEATURE OR OPTION	SD OPTION	SD
A	2-WAY INTERTOLL TRUNK	—	68232-01
B	TOLL TANDEM TRUNK	—	68315-01

CONTROLLER CONNECTOR CKT.	SD-68336-01, ISS. 5
DP INCOMING SENDER CKT.	SD-68221-01, ISS. 12
* LINK CONTROLLER CKT.	SD-68028-01, ISS. 24
MF INCOMING SENDER CKT.	SD-68222-01, ISS. 12
OUTGOING SENDER CKT.	SD-68018-01, ISS. 22
SENDER LINK AND CONNECTOR CKT.	SD-68334-01, ISS. 11
TOLL TANDEM TRUNK CKT. (DP)	SD-68315-01, ISS. 6
2-WAY INTERTOLL TRUNK CKT.-DP INC.	SD-68232-01, ISS. 8

LINK CONTROLLER
TRUNK IDENTIFICATION

NO. 4A TOLL

OS 106-1

ISSUE	1
DATE	6-18-57

BELL TELEPHONE LABORATORIES, INC.

PRINTED IN U. S. A.

ORDER AS SSP ITEM MP-11616

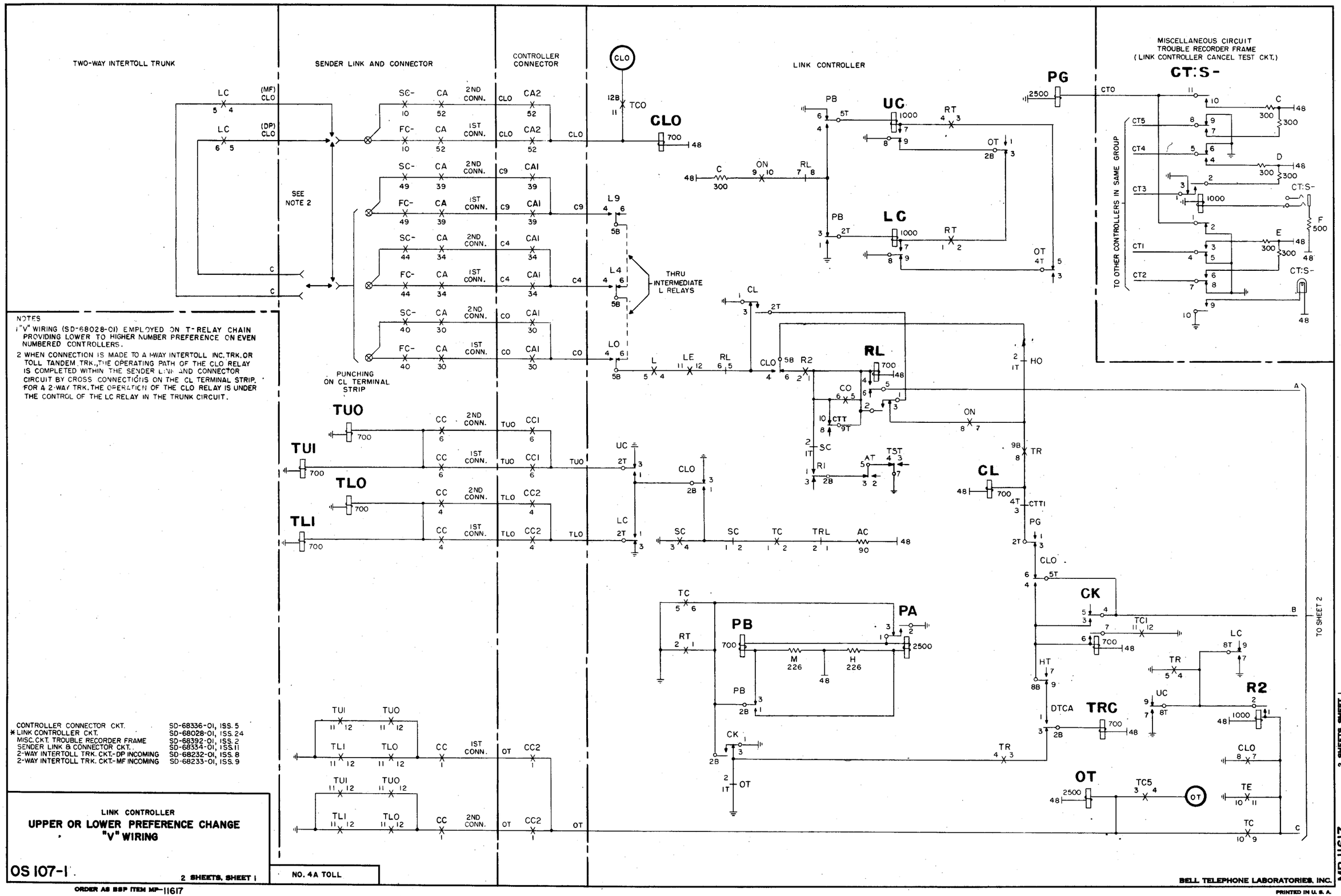

ORDER AS BSP ITEM MP-11617

MP-11617 2 SHEETS, SHEET 2

ISSUE	DATE
1	6-10-67

LINK CONTROLLER

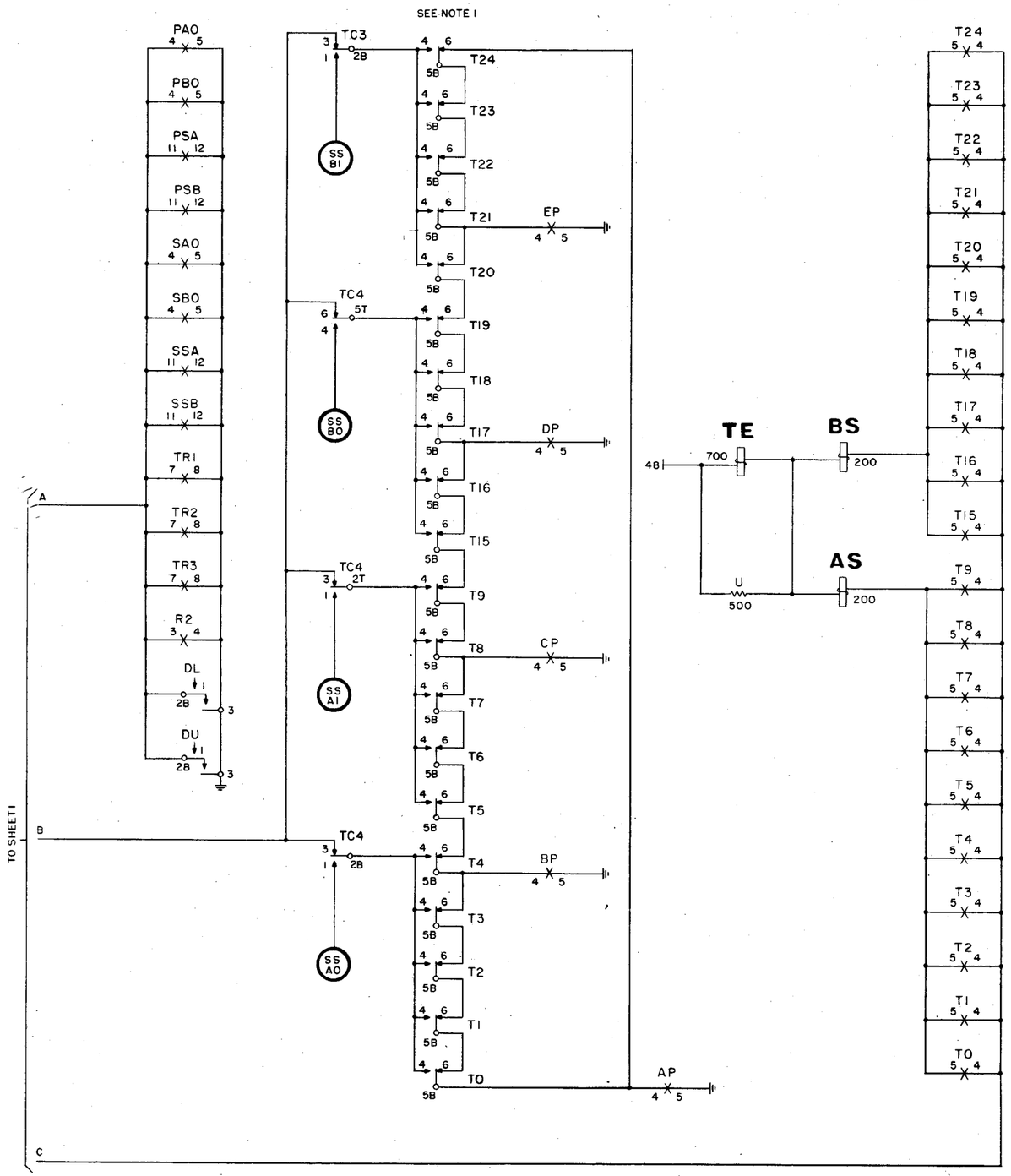

SEQUENCE CHART

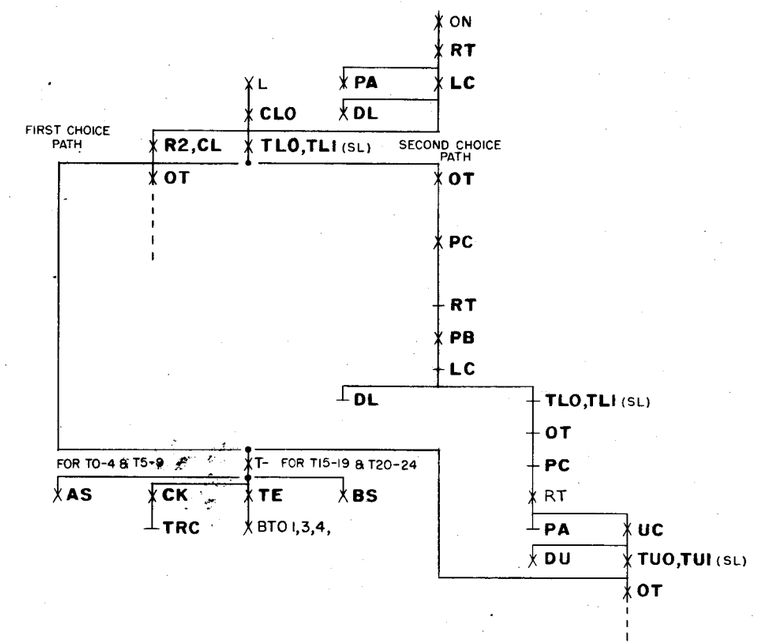

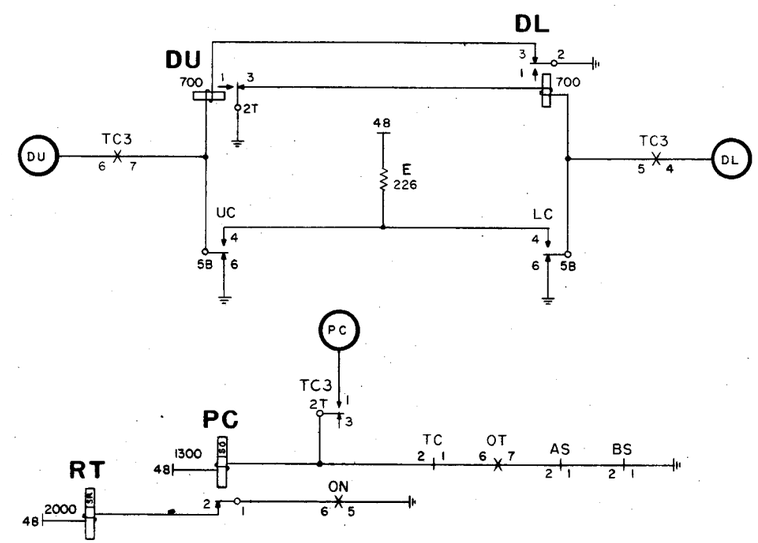

LINK CONTROLLER
UPPER OR LOWER PREFERENCE CHANGE "V" WIRING

NO. 4A TOLL

2 SHEETS, SHEET 2

OS 107-1

BELL TELEPHONE LABORATORIES, INC.
PRINTED IN U. S. A.
ORDER AS BSP ITEM MP-11617

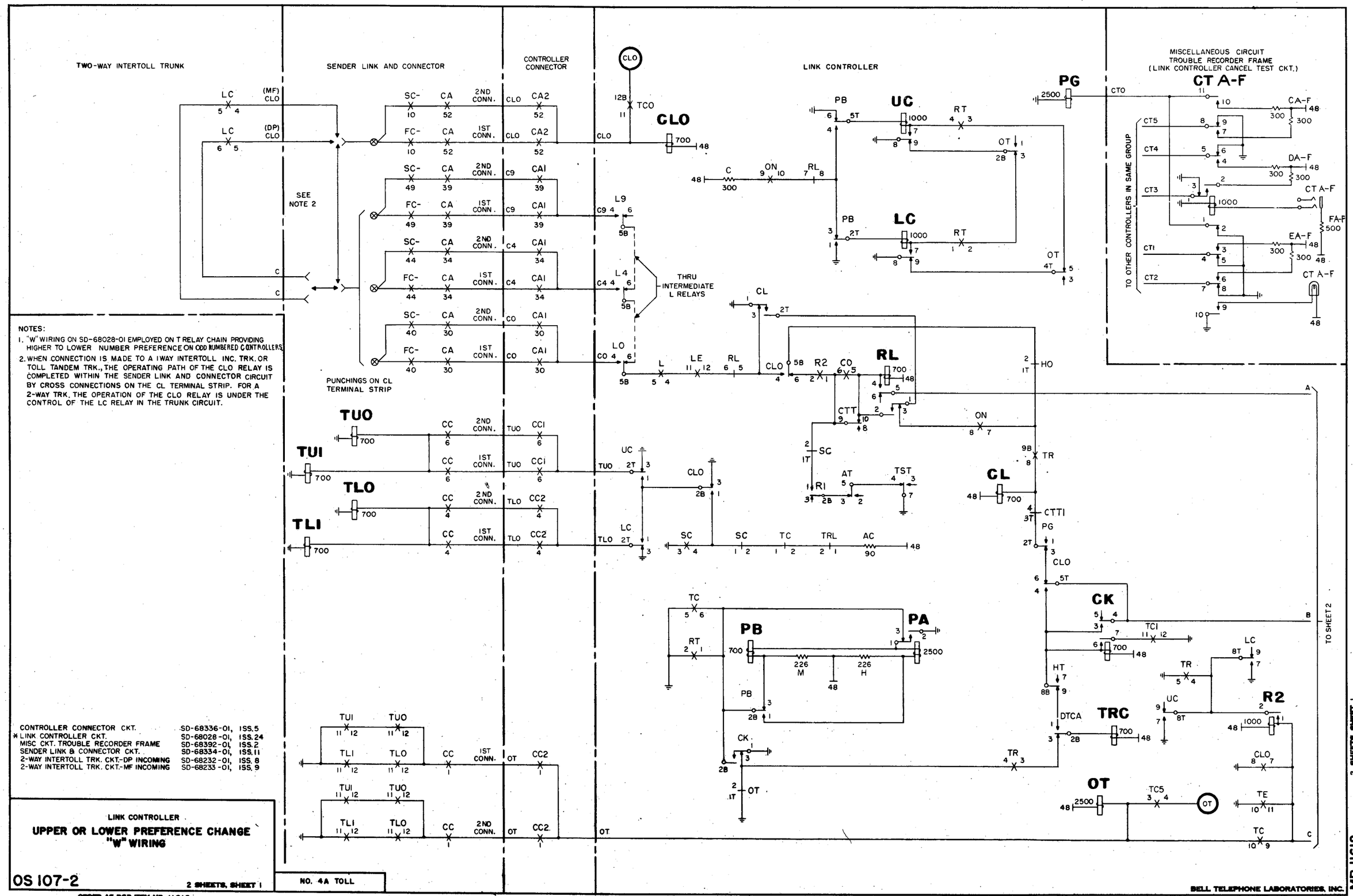
TWO-WAY INTERTOLL TRUNK
SENDER LINK AND CONNECTOR
CONTROLLER CONNECTOR
LINK CONTROLLER
MISCELLANEOUS CIRCUIT TROUBLE RECORDER FRAME (LINK CONTROLLER CANCEL TEST CKT.)
CT A-F
TO OTHER CONTROLLERS IN SAME GROUP
SEE NOTE 2
PUNCHINGS ON CL TERMINAL STRIP
THRU INTERMEDIATE L RELAYS
TO SHEET 2
CLO
TUO
TUI
TLO
TLI
UC
LC
RL
CL
CK
PA
PB
TRC
OT
PG
R2
NOTES:
1. "W" WIRING ON SD-68028-01 EMPLOYED ON T RELAY CHAIN PROVIDING HIGHER TO LOWER NUMBER PREFERENCE ON ODD NUMBERED CONTROLLERS.
2. WHEN CONNECTION IS MADE TO A 1WAY INTERTOLL INC. TRK. OR TOLL TANDEM TRK., THE OPERATING PATH OF THE CLO RELAY IS COMPLETED WITHIN THE SENDER LINK AND CONNECTOR CIRCUIT BY CROSS CONNECTIONS ON THE CL TERMINAL STRIP. FOR A 2-WAY TRK. THE OPERATION OF THE CLO RELAY IS UNDER THE CONTROL OF THE LC RELAY IN THE TRUNK CIRCUIT.
CONTROLLER CONNECTOR CKT. SD-68336-01, ISS. 5
* LINK CONTROLLER CKT. SD-68028-01, ISS. 24
MISC CKT. TROUBLE RECORDER FRAME SD-68392-01, ISS. 2
SENDER LINK & CONNECTOR CKT. SD-68334-01, ISS. 11
2-WAY INTERTOLL TRK. CKT.-DP INCOMING SD-68232-01, ISS. 8
2-WAY INTERTOLL TRK. CKT.-MF INCOMING SD-68233-01, ISS. 9
LINK CONTROLLER
UPPER OR LOWER PREFERENCE CHANGE "W" WIRING
OS 107-2
2 SHEETS, SHEET 1
NO. 4A TOLL
ORDER AS BSP ITEM MP-11618
BELL TELEPHONE LABORATORIES, INC.
PRINTED IN U. S. A.
MP-11618
2 SHEETS, SHEET 1
ISSUE 1
DATE 7-20-51

MP-11618 2 SHEETS, SHEET 2

ISSUE			
DATE	1		
7-20-51			

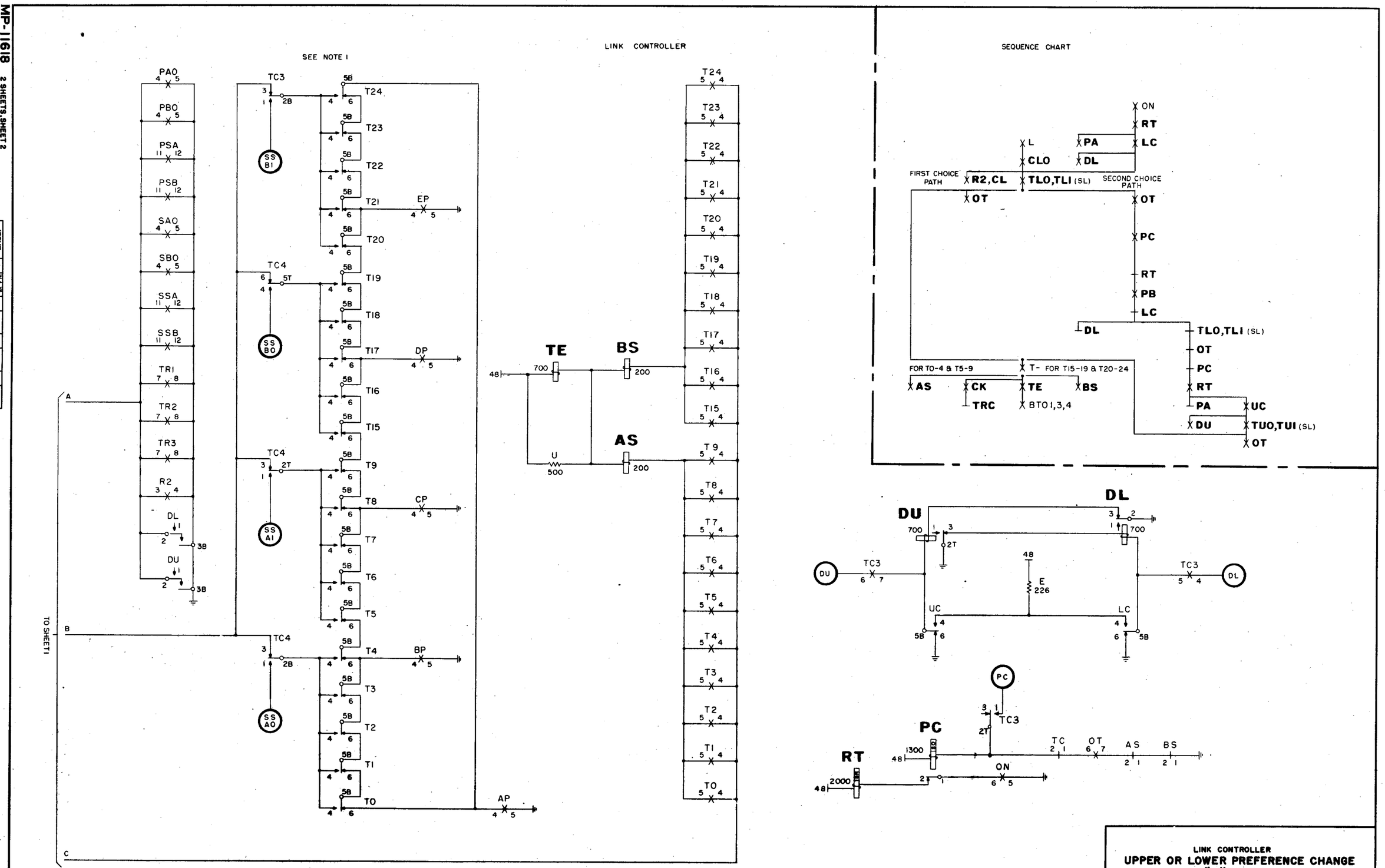

LINK CONTROLLER
UPPER OR LOWER PREFERENCE CHANGE
"W" WIRING

NO. 4A TOLL

2 SHEETS, SHEET 2

CS 107-2

BELL TELEPHONE LABORATORIES, INC.
PRINTED IN U. S. A.
ORDER AS BSP ITEM MP-11618

MP-11621

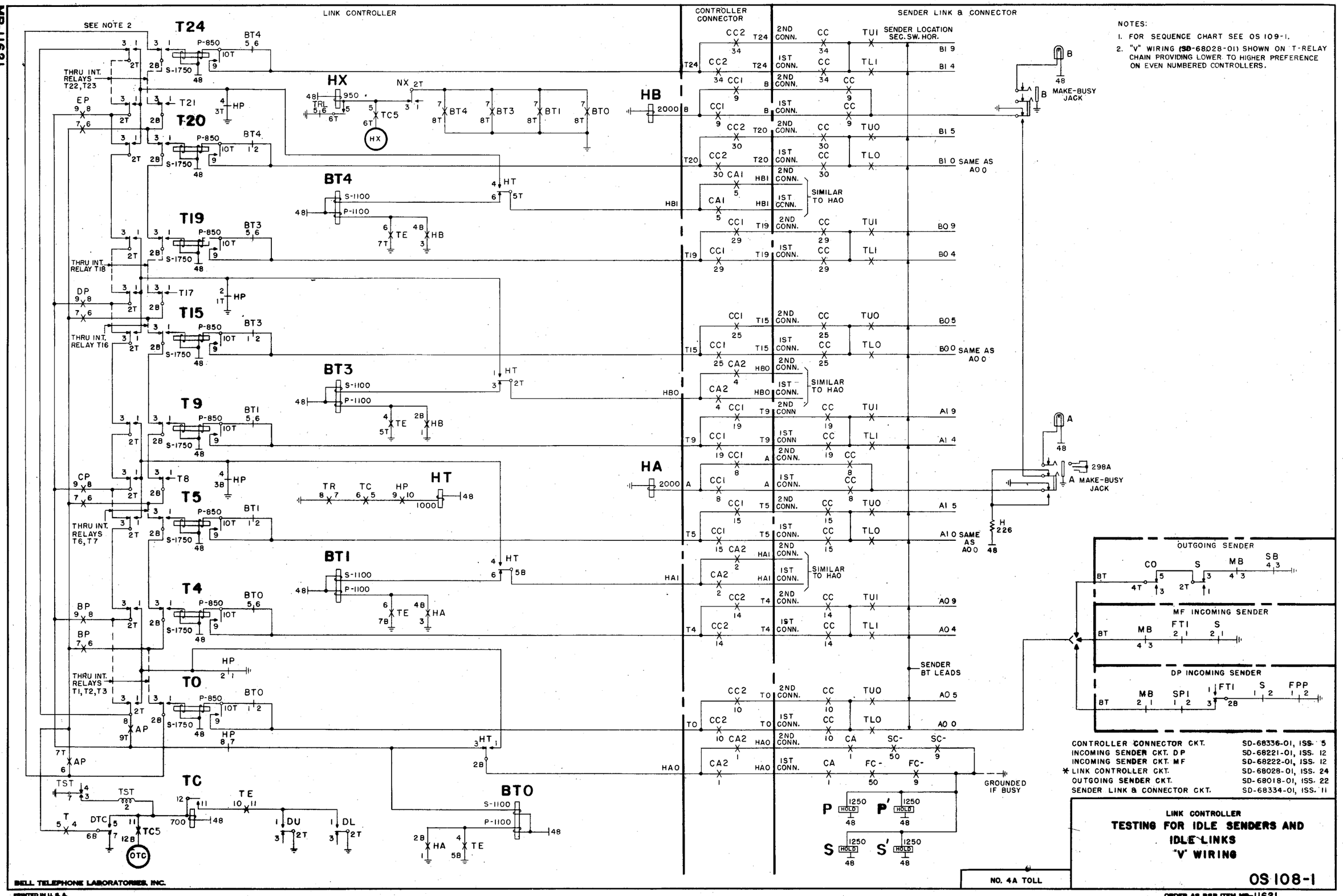

ISSUE		
DATE		
6-18-51	1	K.E.B.

MP-11622

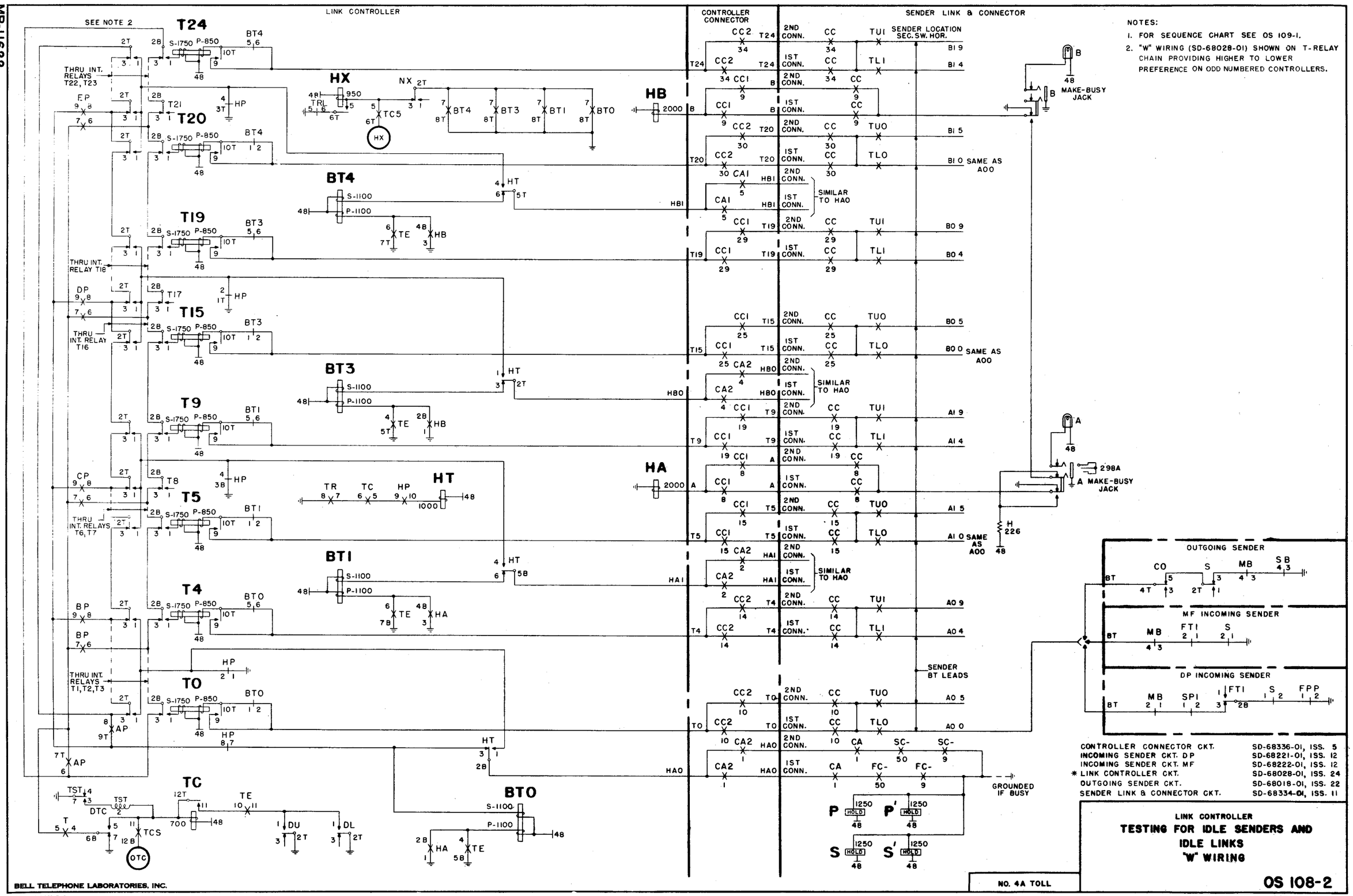

NOTES:

1. FOR SEQUENCE CHART SEE OS 109-1.
2. "W" WIRING (SD-68028-01) SHOWN ON T-RELAY CHAIN PROVIDING HIGHER TO LOWER PREFERENCE ON ODD NUMBERED CONTROLLERS.

CONTROLLER CONNECTOR CKT.	SD-68336-01, ISS. 5
INCOMING SENDER CKT. DP	SD-68221-01, ISS. 12
INCOMING SENDER CKT. MF	SD-68222-01, ISS. 12
* LINK CONTROLLER CKT.	SD-68028-01, ISS. 24
OUTGOING SENDER CKT.	SD-68018-01, ISS. 22
SENDER LINK & CONNECTOR CKT.	SD-68334-01, ISS. 11

ISSUE	REVISED BY
1	
DATE 6-15-71	

LINK CONTROLLER

TESTING FOR IDLE SENDERS AND IDLE LINKS "W" WIRING

NO. 4A TOLL

OS 108-2

BELL TELEPHONE LABORATORIES, INC.

PRINTED IN U. S. A.

ORDER AS BSP ITEM MP-11622

MP-11624

ISSUE	DATE
1	6-18-57

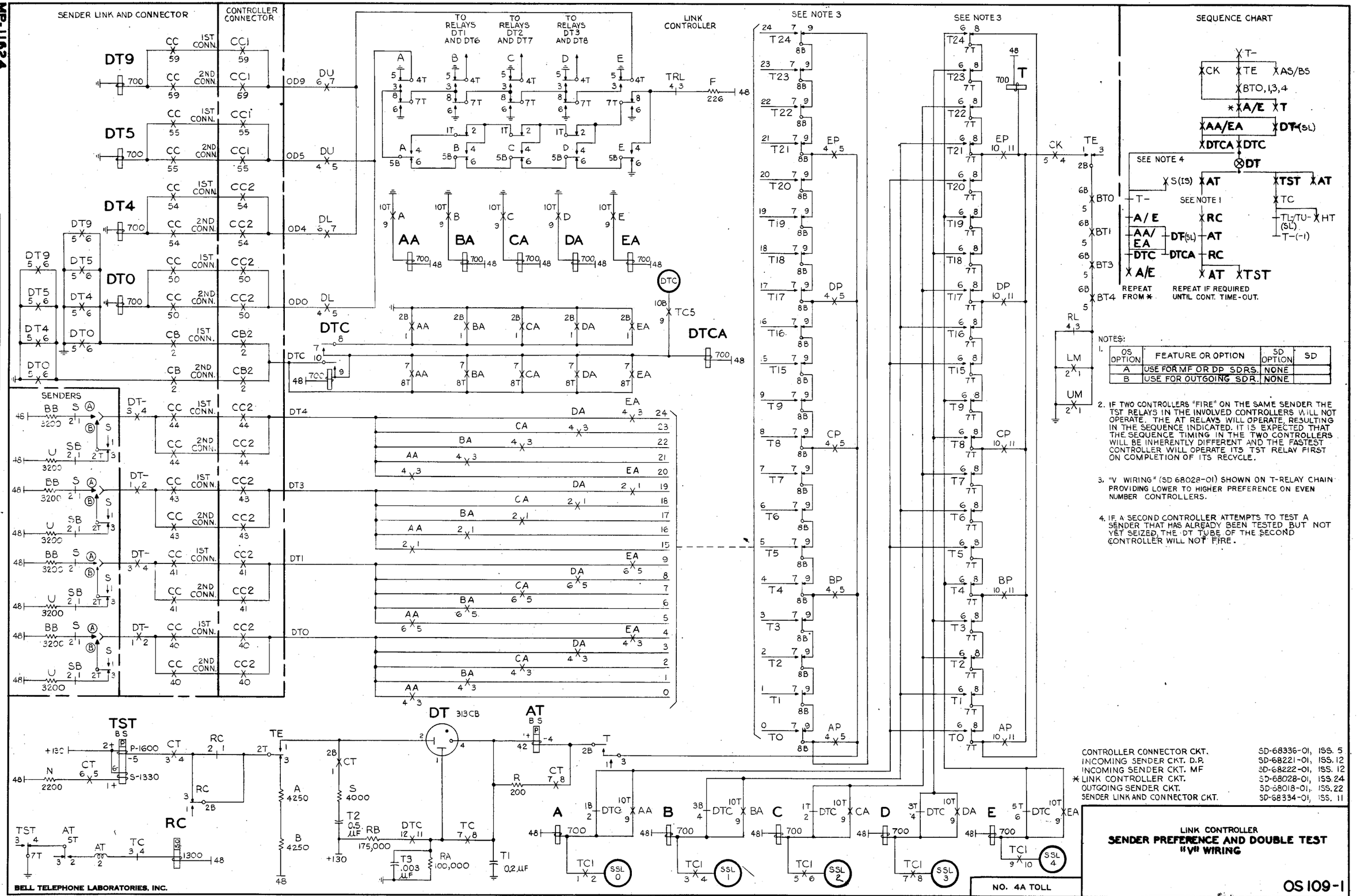

BELL TELEPHONE LABORATORIES, INC.

PRINTED IN U. S. A.

ORDER AS BSP ITEM MP-11624

MP-11625

ISSUE	DATE
1	6-8-51

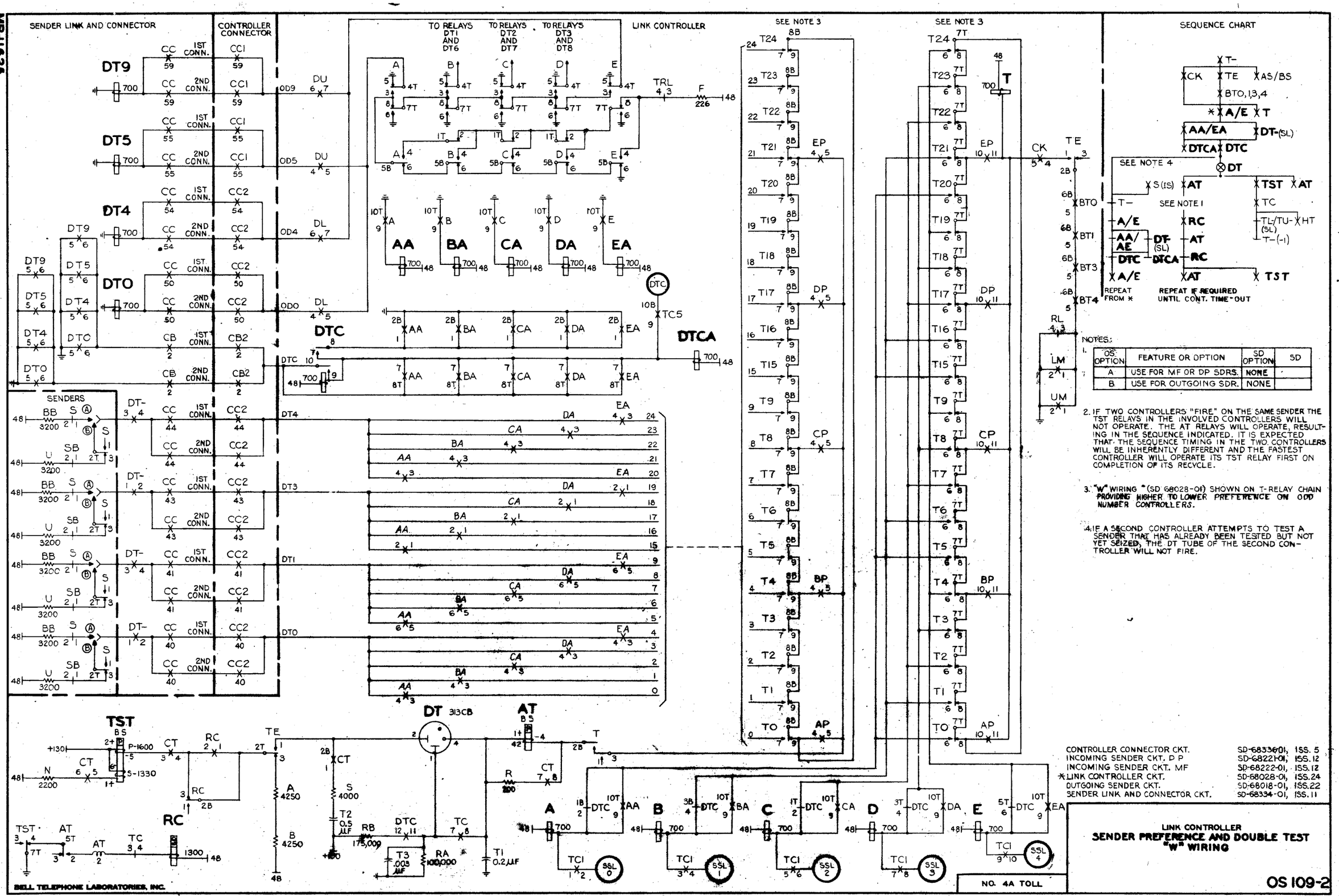

NOTES:

1.

OS OPTION	FEATURE OR OPTION	SD OPTION	SD
A	USE FOR MF OR DP SDRS.	NONE	
B	USE FOR OUTGOING SDR.	NONE	

2. IF TWO CONTROLLERS "FIRE" ON THE SAME SENDER THE TST RELAYS IN THE INVOLVED CONTROLLERS WILL NOT OPERATE. THE AT RELAYS WILL OPERATE, RESULTING IN THE SEQUENCE INDICATED. IT IS EXPECTED THAT THE SEQUENCE TIMING IN THE TWO CONTROLLERS WILL BE INHERENTLY DIFFERENT AND THE FASTEST CONTROLLER WILL OPERATE ITS TST RELAY FIRST ON COMPLETION OF ITS RECYCLE.

3. "W" WIRING * (SD 68028-01) SHOWN ON T-RELAY CHAIN PROVIDING HIGHER TO LOWER PREFERENCE ON ODD NUMBER CONTROLLERS.

4. IF A SECOND CONTROLLER ATTEMPTS TO TEST A SENDER THAT HAS ALREADY BEEN TESTED BUT NOT YET SEIZED, THE DT TUBE OF THE SECOND CONTROLLER WILL NOT FIRE.

CONTROLLER CONNECTOR CKT.	SD-68336-01, ISS. 5
INCOMING SENDER CKT. D P	SD-68221-01, ISS. 12
INCOMING SENDER CKT. MF	SD-68222-01, ISS. 12
* LINK CONTROLLER CKT.	SD-68028-01, ISS. 24
OUTGOING SENDER CKT.	SD-68018-01, ISS. 22
SENDER LINK AND CONNECTOR CKT.	SD-68334-01, ISS. 11

LINK CONTROLLER
SENDER PREFERENCE AND DOUBLE TEST "W" WIRING

OS 109-2

BELL TELEPHONE LABORATORIES, INC.
PRINTED IN U. S. A.
ORDER AS BSP ITEM MP-11625

MP-11619

ISSUE	DATE
1	1-22-65
2	6-23-65

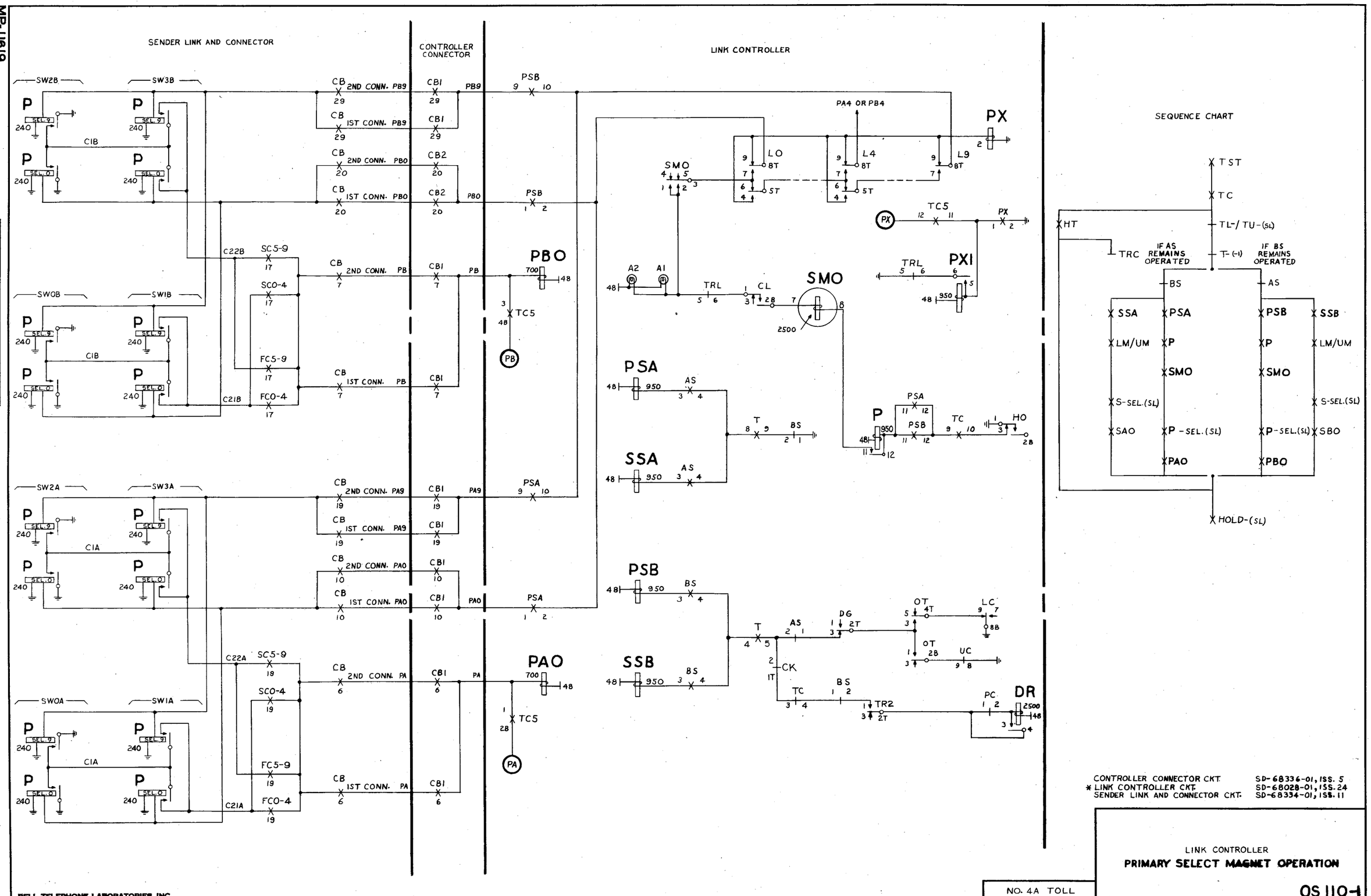

CONTROLLER CONNECTOR CKT. SD-68336-01, ISS. 5
* LINK CONTROLLER CKT. SD-68028-01, ISS. 24
SENDER LINK AND CONNECTOR CKT. SD-68334-01, ISS. 11

LINK CONTROLLER

PRIMARY SELECT MAGNET OPERATION

NO. 4A TOLL

OS 110-1

BELL TELEPHONE LABORATORIES, INC.
PRINTED IN U. S. A.

ORDER AS BSP ITEM MP-11619

MP-11620

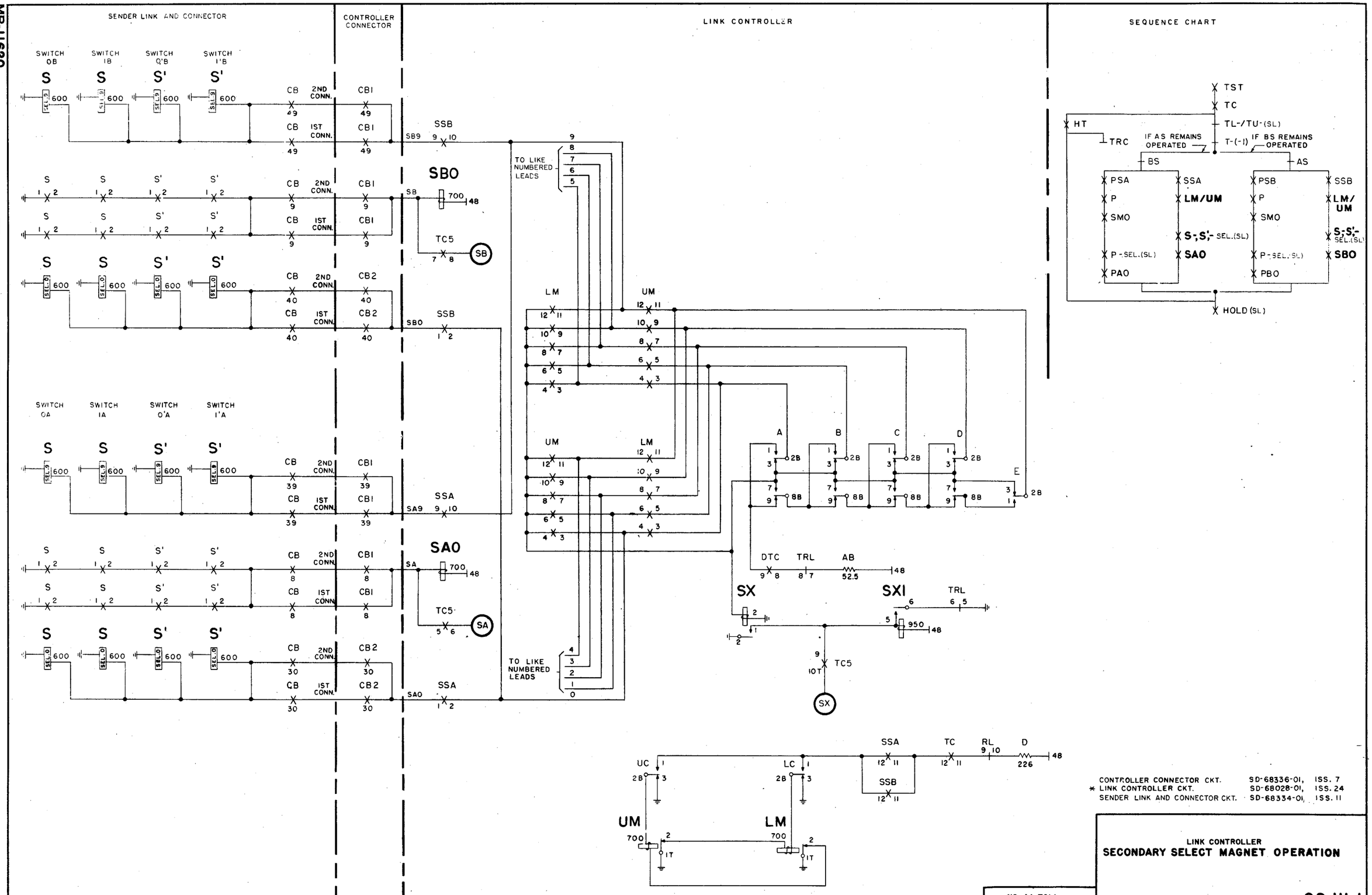

LINK CONTROLLER
SECONDARY SELECT MAGNET OPERATION

NO. 4A TOLL

OS III-1

BELL TELEPHONE LABORATORIES, INC.

PRINTED IN U. S. A.

ORDER AS BSP ITEM MP-11620

MP-11626

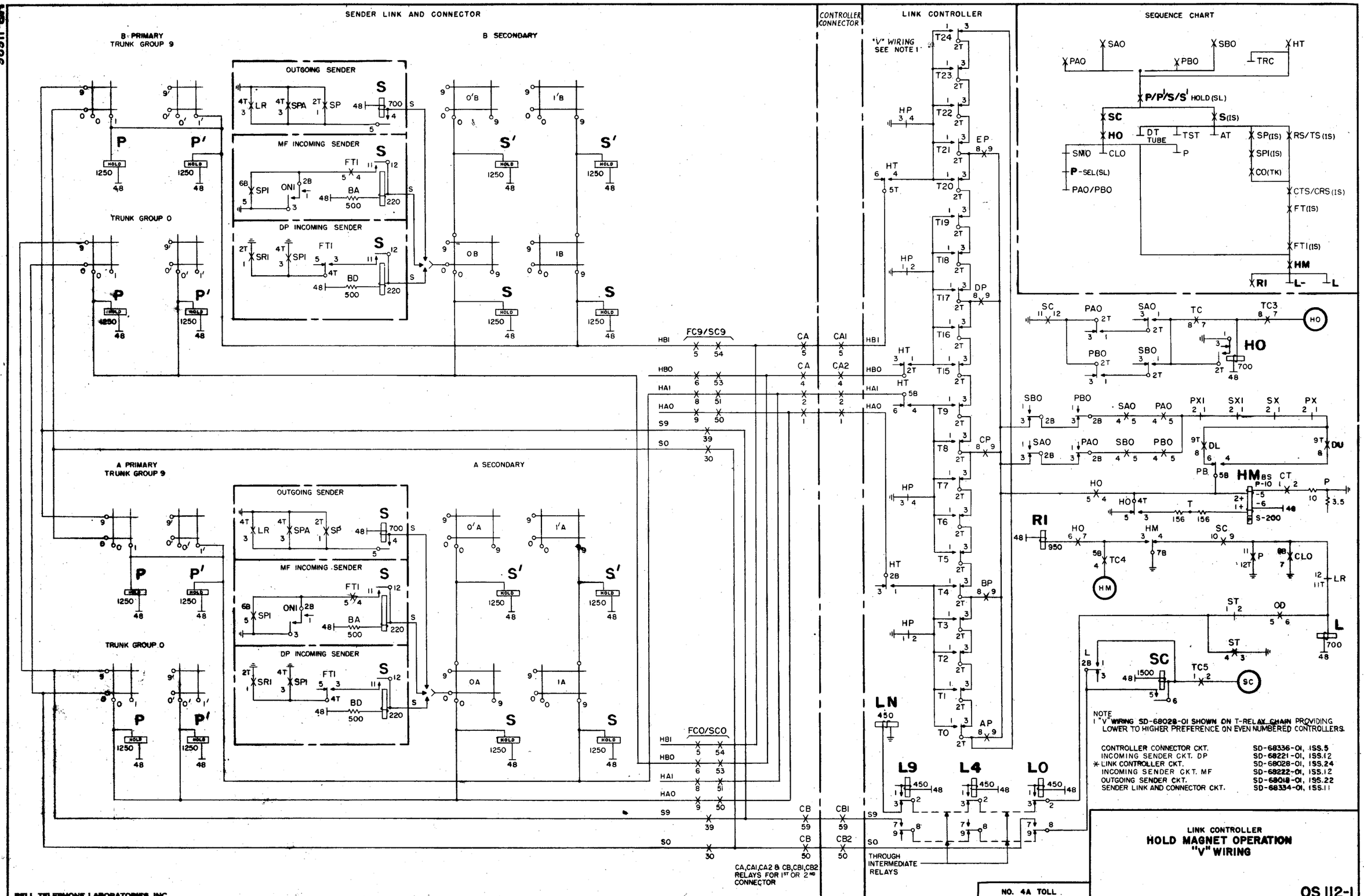

BELL TELEPHONE LABORATORIES, INC.

PRINTED IN U. S. A.

ORDER AS BSP ITEM MP-11626

MP-11627

ISSUE	DATE
1	6-22-51

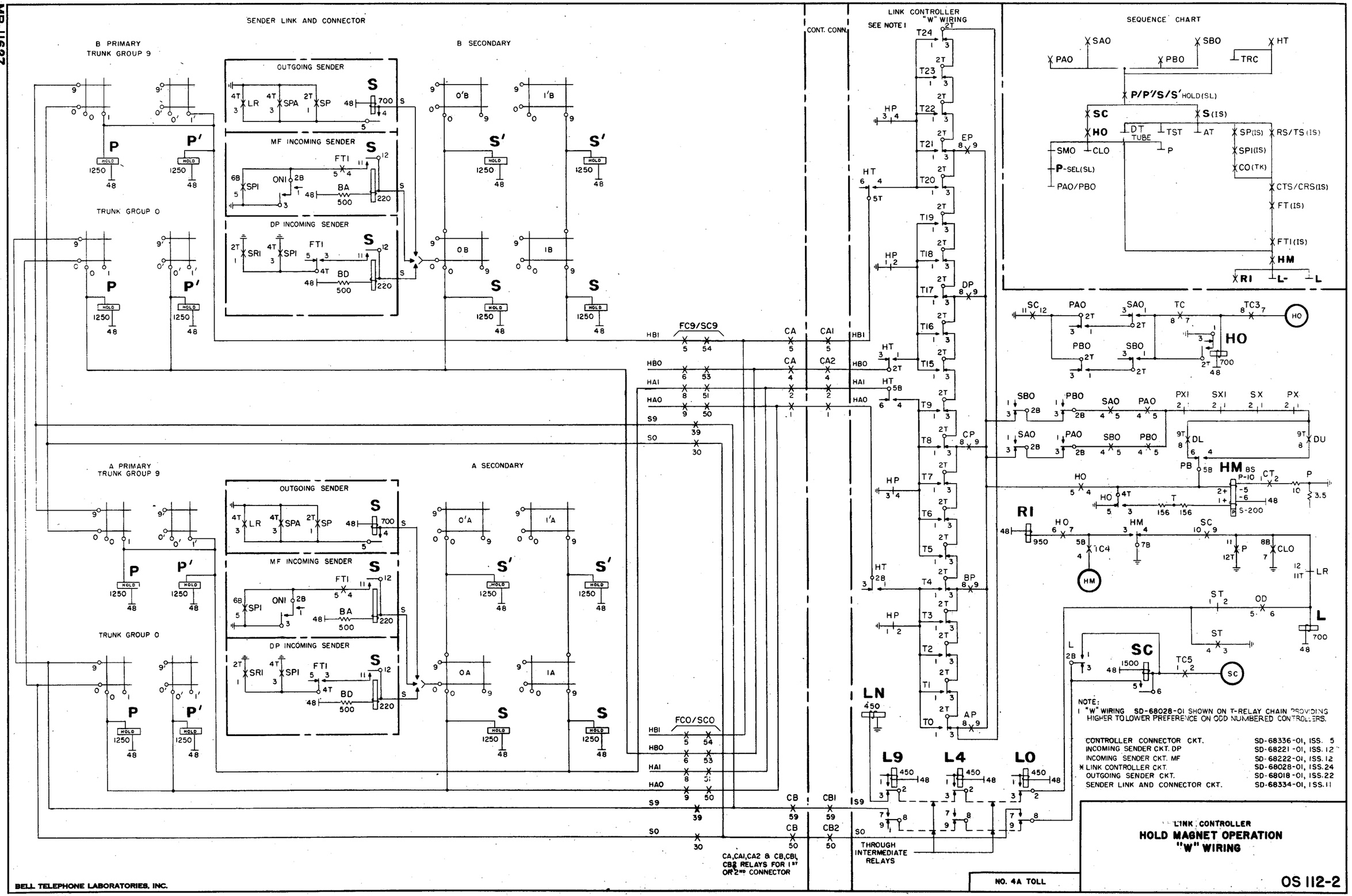

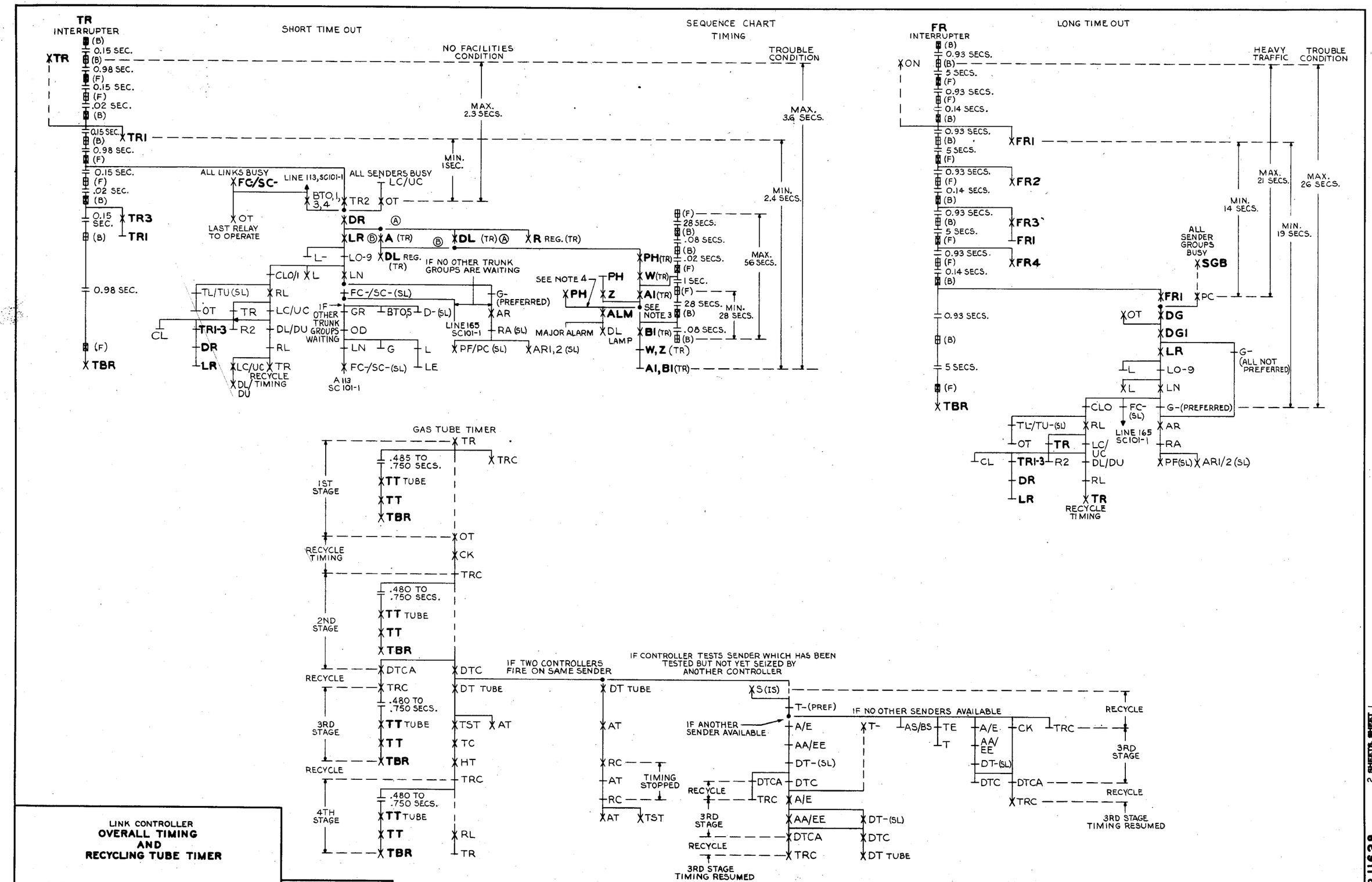

LINK CONTROLLER
OVERALL TIMING AND RECYCLING TUBE TIMER

OS 113-1

2 SHEETS, SHEET 1

NO. 4A TOLL

ORDER AS BSP ITEM MP-11628

BELL TELEPHONE LABORATORIES, INC.

PRINTED IN U. S. A.

MP-11628

2 SHEETS, SHEET 1

ISSUE	1	2
DATE	7-20-51	

MP-11628

2 SHEETS, SHEET 2

ISSUE	DATE
1	7-26-71

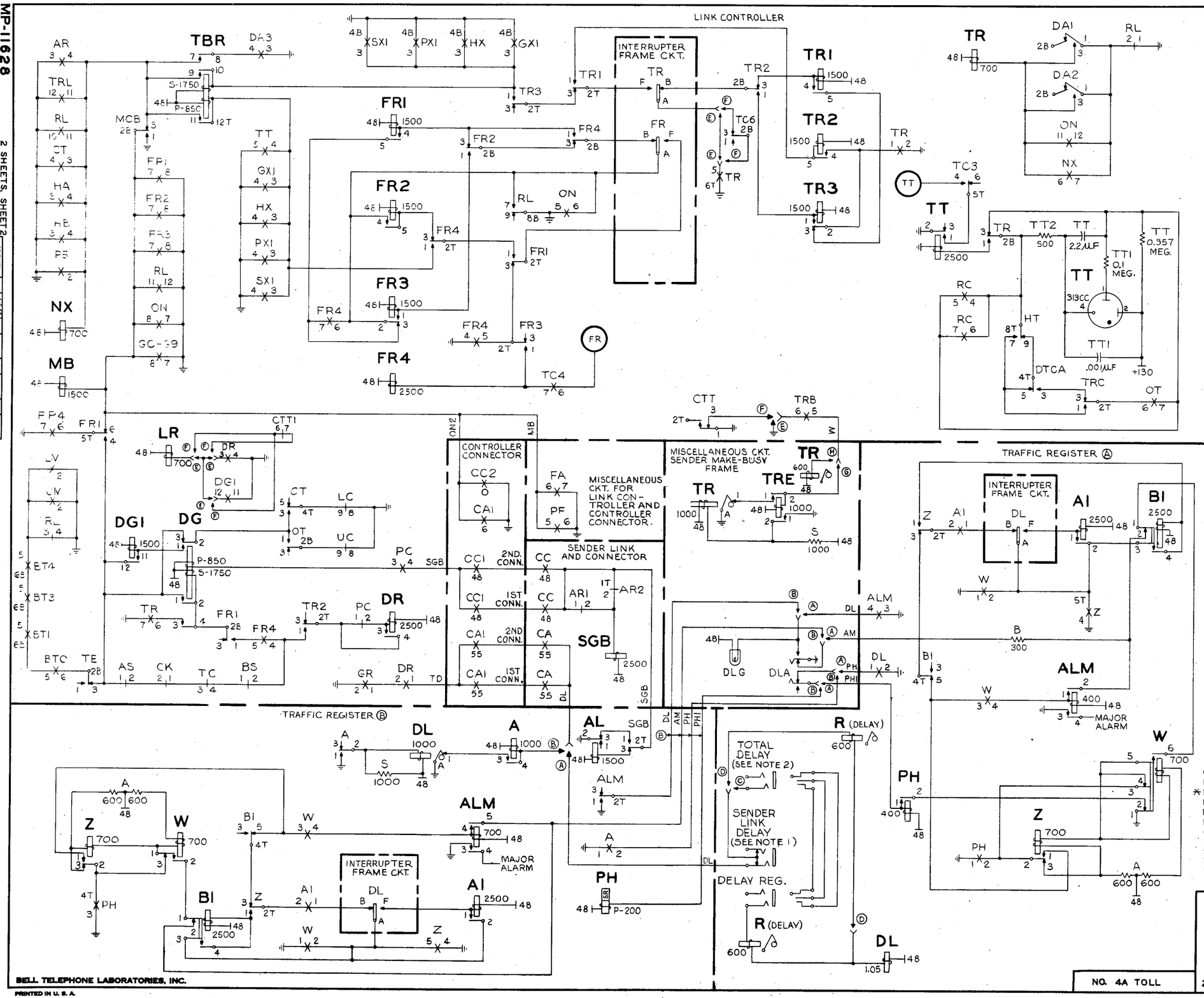

NOTES:

1. SENDER LINK DELAY JACKS FURNISHED ONE PER PAIR OF SENDER LINK FRAMES IN A GROUP. THIS PROVIDES INDIVIDUAL SENDER LINK DELAY REGISTRATION.
2. TOTAL DELAY JACK FURNISHED ONE PER 2 GROUPS OF SENDER LINK FRAMES. THIS PROVIDES COMBINED SENDER LINK DELAY REGISTRATION.
3. IF NO SUBSEQUENT DELAY, REGISTRATION OCCURS.
4. IF 2ND DELAY, REGISTRATION OCCURS.
5.

OS OPTION	FEATURE OR OPTION		SD OPTION	SD
A	TRAFFIC REGISTER WITH 14-TYPE REGISTERS			68412-01
B	TRAFFIC REGISTER WITH 12-TYPE REGISTERS.			68412-01
C	MFR. DISC.		FIG. 22	
D	STANDARD			
E	LINK CONTROLLER TEST CIRCUIT	NOT PROVIDED	YD	68028-01
F		PROVIDED	YC, FIG. 7	
G	A & M		FIG. 3	
H	STD		FIG. 21	68386-01

CONTROLLER CONNECTOR CKT.	SD-68336-01, ISS. 7
INTERRUPTER FRAME CKT.	SD-65053-01, ISS. 15
* LINK CONTROLLER CKT.	SD-68028-01, ISS. 24
MISCELLANEOUS CKT. FOR SENDER MAKE-BUSY FRAME	SD-68386-01, ISS. 3
MISCELLANEOUS CKT. LINK CONTROLLER AND CONTROLLER CONNECTOR FRAME	SD-68087-01, ISS. 7
SENDER LINK AND CONNECTOR CKT.	SD-68334-01, ISS. 11
TRAFFIC REGISTER CKT.	SD-68060-01, ISS. 23
TRAFFIC REGISTER CKT.	SD-68412-01, ISS. 5

LINK CONTROLLER
OVERALL TIMING AND RECYCLING TUBE TIMER

2 SHEETS, SHEET 2

OS 113-1

NO. 4A TOLL

BELL TELEPHONE LABORATORIES, INC.
PRINTED IN U. S. A.

ORDER AS BSP ITEM MP-11628

MP-11632

ISSUE	DATE
1	12-7-67
2	8-7-67

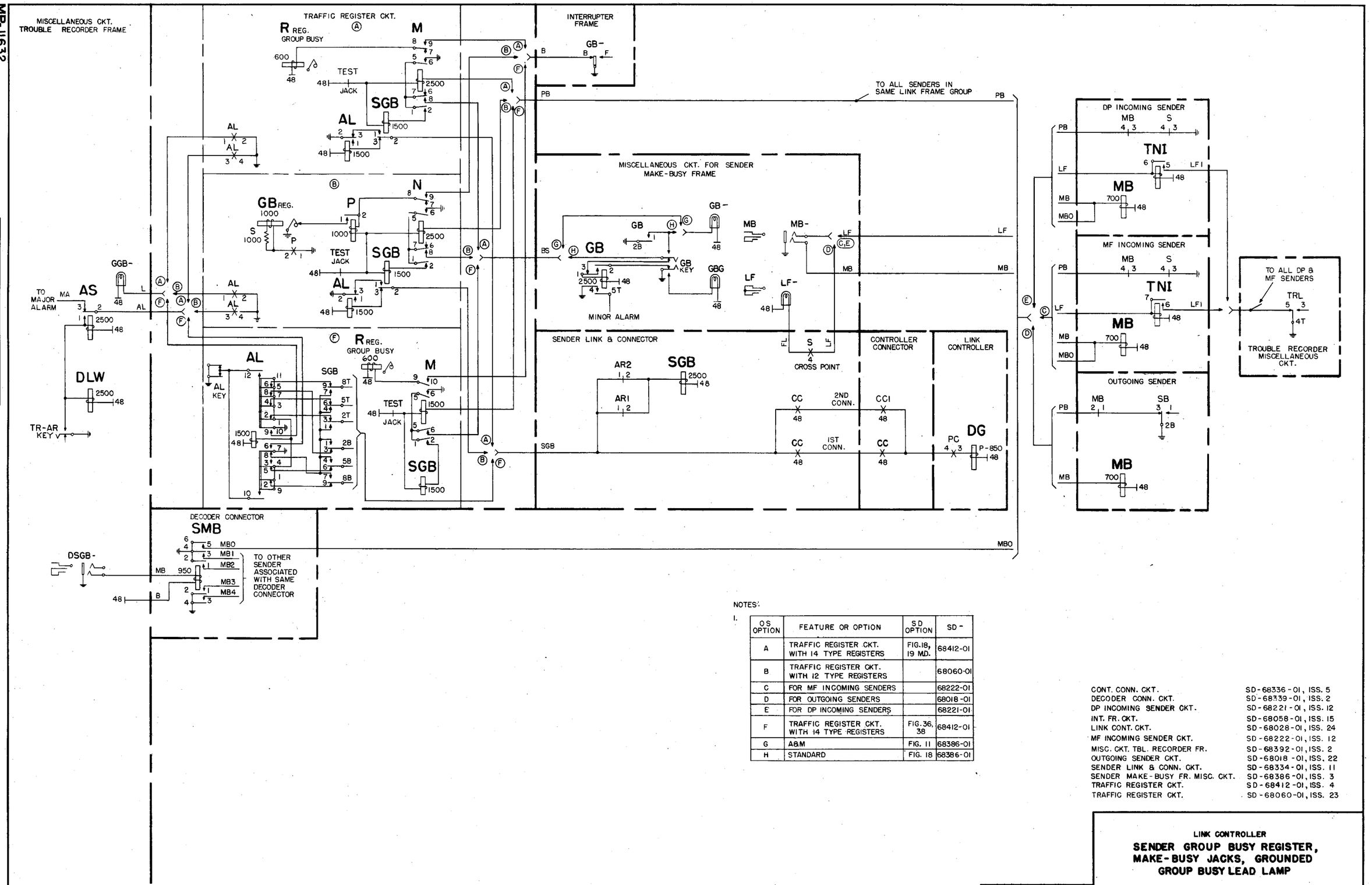

NOTES:

1.

OS OPTION	FEATURE OR OPTION	SD OPTION	SD -
A	TRAFFIC REGISTER CKT. WITH 14 TYPE REGISTERS	FIG. 18, 19 MD.	68412-01
B	TRAFFIC REGISTER CKT. WITH 12 TYPE REGISTERS		68060-01
C	FOR MF INCOMING SENDERS		68222-01
D	FOR OUTGOING SENDERS		68018-01
E	FOR DP INCOMING SENDERS		68221-01
F	TRAFFIC REGISTER CKT. WITH 14 TYPE REGISTERS	FIG. 36, 38	68412-01
G	A&M	FIG. 11	68386-01
H	STANDARD	FIG. 18	68386-01

CONT. CONN. CKT.	SD-68336-01, ISS. 5
DECODER CONN. CKT.	SD-68339-01, ISS. 2
DP INCOMING SENDER CKT.	SD-68221-01, ISS. 12
INT. FR. CKT.	SD-68058-01, ISS. 15
LINK CONT. CKT.	SD-68028-01, ISS. 24
MF INCOMING SENDER CKT.	SD-68222-01, ISS. 12
MISC. CKT. TBL. RECORDER FR.	SD-68392-01, ISS. 2
OUTGOING SENDER CKT.	SD-68018-01, ISS. 22
SENDER LINK & CONN. CKT.	SD-68334-01, ISS. 11
SENDER MAKE-BUSY FR. MISC. CKT.	SD-68386-01, ISS. 3
TRAFFIC REGISTER CKT.	SD-68412-01, ISS. 4
TRAFFIC REGISTER CKT.	SD-68060-01, ISS. 23

LINK CONTROLLER

SENDER GROUP BUSY REGISTER, MAKE-BUSY JACKS, GROUNDED GROUP BUSY LEAD LAMP

NO. 4A TOLL

OS 114-1

BELL TELEPHONE LABORATORIES, INC.
PRINTED IN U. S. A.
ORDER AS BSP ITEM MP-11632

MP-11635

DATE	ISSUE
6-22-15	1

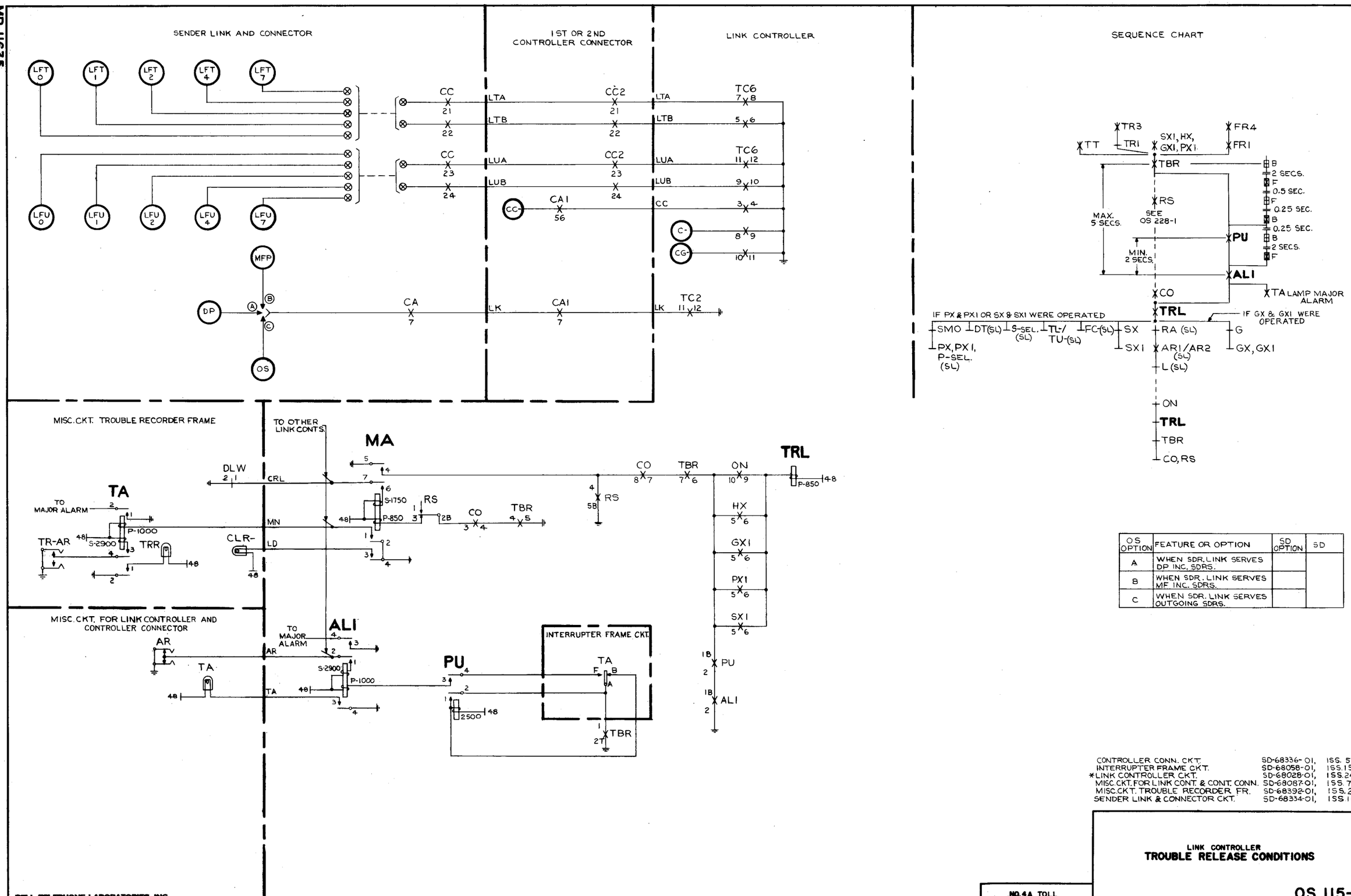

OS OPTION	FEATURE OR OPTION	SD OPTION	SD
A	WHEN SDR. LINK SERVES DP INC. SDRS.		
B	WHEN SDR. LINK SERVES MF INC. SDRS.		
C	WHEN SDR. LINK SERVES OUTGOING SDRS.		

CONTROLLER CONN. CKT.	SD-68336-01,	ISS. 5
INTERRUPTER FRAME CKT.	SD-68058-01,	ISS. 15
*LINK CONTROLLER CKT.	SD-68028-01,	ISS. 24
MISC. CKT. FOR LINK CONT. & CONT. CONN.	SD-68087-01,	ISS. 7
MISC. CKT. TROUBLE RECORDER FR.	SD-68392-01,	ISS. 2
SENDER LINK & CONNECTOR CKT.	SD-68334-01,	ISS. 11

LINK CONTROLLER
TROUBLE RELEASE CONDITIONS

NO. 4A TOLL

OS 115-1

BELL TELEPHONE LABORATORIES, INC.
PRINTED IN U. S. A.
ORDER AS BSP ITEM MP-11635

MP-11644

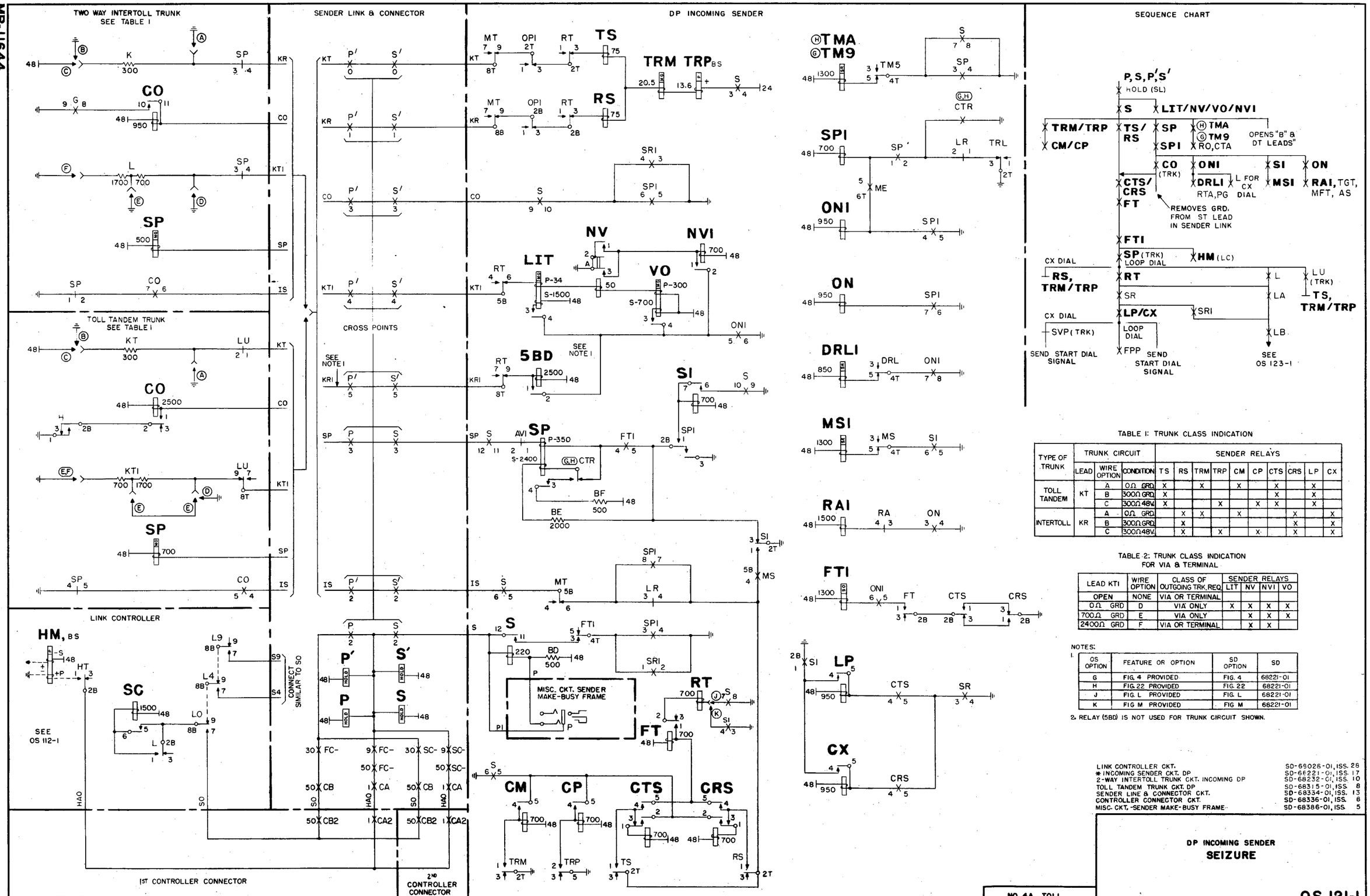

TABLE I: TRUNK CLASS INDICATION

TYPE OF TRUNK	TRUNK CIRCUIT			SENDER RELAYS									
	LEAD	WIRE OPTION	CONDITION	TS	RS	TRM	TRP	CM	CP	CTS	CRS	LP	CX
TOLL TANDEM	KT	A	0Ω GRD	X		X		X		X		X	
		B	300Ω GRD	X						X		X	
		C	300Ω 48V	X			X		X	X		X	
INTERTOLL	KR	A	0Ω GRD		X	X		X			X		X
		B	300Ω GRD		X						X		X
		C	300Ω 48V		X		X		X		X		X

TABLE 2: TRUNK CLASS INDICATION FOR VIA & TERMINAL

LEAD KTI	WIRE OPTION	CLASS OF OUTGOING TRK. REQ.	SENDER RELAYS			
			LIT	NV	NVI	VO
OPEN	NONE	VIA OR TERMINAL				
0Ω GRD	D	VIA ONLY	X	X	X	X
700Ω GRD	E	VIA ONLY		X	X	X
2400Ω GRD	F	VIA OR TERMINAL		X	X	

NOTES:

1.

OS OPTION	FEATURE OR OPTION	SD OPTION	SD
G	FIG. 4 PROVIDED	FIG. 4	68221-01
H	FIG. 22 PROVIDED	FIG. 22	68221-01
J	FIG. L PROVIDED	FIG. L	68221-01
K	FIG M PROVIDED	FIG M	68221-01

2. RELAY (5BD) IS NOT USED FOR TRUNK CIRCUIT SHOWN.

LINK CONTROLLER CKT.	SD-68026-01, ISS. 28
* INCOMING SENDER CKT. DP	SD-68221-01, ISS. 17
2-WAY INTERTOLL TRUNK CKT. INCOMING DP	SD-68232-01, ISS. 10
TOLL TANDEM TRUNK CKT. DP	SD-68315-01, ISS. 8
SENDER LINE & CONNECTOR CKT.	SD-68334-01, ISS. 13
CONTROLLER CONNECTOR CKT.	SD-68336-01, ISS. 8
MISC. CKT. -SENDER MAKE-BUSY FRAME	SD-68386-01, ISS. 5

ISSUE	DATE
1 WAVE R.R.B.	7-18-51
2 S.P.S. S.P.C.	10-7-53

DP INCOMING SENDER
SEIZURE

NO. 4A TOLL

OS 121-1

MP-11647

ISSUE	1	2
DATE	6-26-51	10-7-59

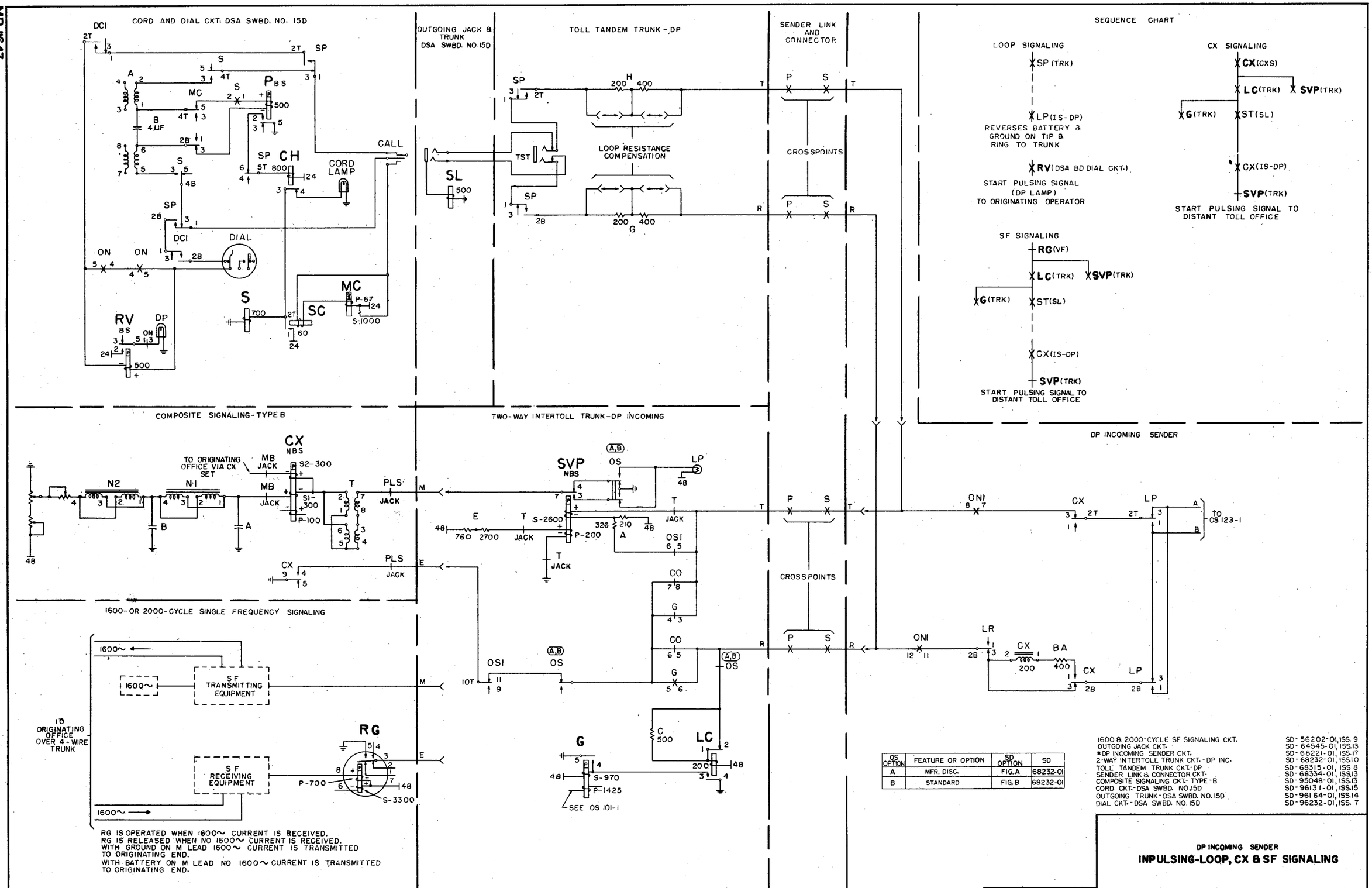

OS OPTION	FEATURE OR OPTION	SD OPTION	SD
A	MFR. DISC.	FIG. A	68232-01
B	STANDARD	FIG. B	68232-01

1600 & 2000-CYCLE SF SIGNALING CKT.	SD-56202-01, ISS. 9
OUTGOING JACK CKT.	SD-64545-01, ISS. 13
*DP INCOMING SENDER CKT.	SD-68221-01, ISS. 17
2-WAY INTERTOLL TRUNK CKT.-DP INC.	SD-68232-01, ISS. 10
TOLL TANDEM TRUNK CKT-DP	SD-68315-01, ISS. 8
SENDER LINK & CONNECTOR CKT.	SD-68334-01, ISS. 13
COMPOSITE SIGNALING CKT.-TYPE-B	SD-95048-01, ISS. 13
CORD CKT.-DSA SWBD. NO. 15D	SD-96131-01, ISS. 15
OUTGOING TRUNK-DSA SWBD. NO. 15D	SD-96164-01, ISS. 14
DIAL CKT.-DSA SWBD. NO. 15D	SD-96232-01, ISS. 7

DP INCOMING SENDER

INPULSING-LOOP, CX & SF SIGNALING

NO. 4A TOLL

OS 122-1

BELL TELEPHONE LABORATORIES, INC.
PRINTED IN U. S. A.
ORDER AS BSP ITEM MP-11647

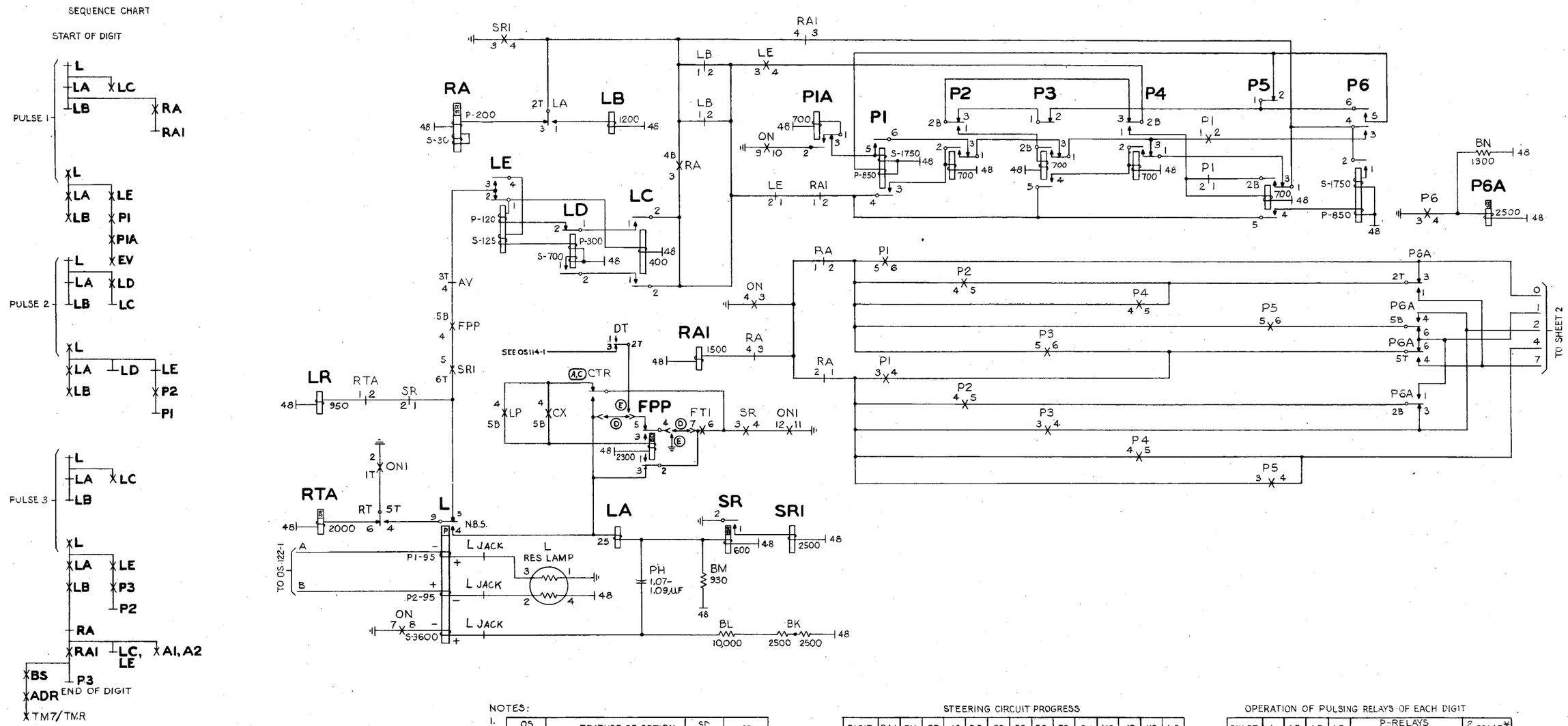

NOTES:

1.

OS OPTION	FEATURE OR OPTION	SD OPTION	SD
W	3 DIGIT TX	W	68221-01
E	FIG. M PROVIDED		
D	FIG. L PROVIDED		
C	FIG. 22 PROVIDED		
B	2 & 3 DIGIT TX	B	
A	FIG. 4 PROVIDED		

2. FOR SEQUENCE CHART OF COMPLETE REGISTRATION OF DIGITS SEE SC 103-1.

STEERING CIRCUIT PROGRESS

DIGIT	RAI	EV	OD	AS	BS	CS	DS	ES	FS	GH	HS	JS	KS	LS
A	R O	H+ H		H* H	O									
B	R O	R	O H	R	H H	O								
C	R O	O H	R		R	H H	O							
D	R O	R	O H			R	H H	O						
E	R O	O H	R				R	H H	O					
F	R O	R	O H					R	H H	O				
G	R O	O H	R						R	H H	O			
H	R O	R	O H							R	H H	O		
J	R O	O H	R								R	H H	O	
K	R O	R	O H									R	H H	O
L	R O	O H	R										R	H H

+ EV. INITIALLY OPERATES ON FIRST DIGIT FROM PIA
* AS. INITIALLY OPERATES FROM OFF-NORMAL GRD.

OPERATION OF PULSING RELAYS OF EACH DIGIT

PULSE	L	LC	LD	LE	P-RELAYS OPERATED	P-RELAYS RELEASED	2/5 COMB.*
1	R O	O H		O	P1		0,1
2	R O	R	O R	H R	P2	P1	0,2
3	R O	O H		O	P3	P2	1,2
4	R O	R	O R	H R	P4	P3	0,4
5	R O	O H		O	P5	P4	1,4
6	R O	R	O R	H R	P5, P6		2,4
7	R O	O H		O	P1, P6	P5	0,7
8	R O	R	O R	H R	P2, P6	P1	1,7
9	R O	O H		O	P3, P6	P2	2,7
10	R O	R	O R	H R	P4, P6		4,7

* INDICATES WHICH OF CORRESPONDINGLY NUMBERED $A\frac{2}{5}$, $B\frac{2}{5}$, ETC., RELAYS ARE OPERATED AT END OF DIGIT.

* INCOMING SENDER CKT. DP SD-68221-01, ISS. 17

DP INCOMING SENDER

INPULSING-PULSE COUNT & REGISTRATION

OS 123-1

2 SHEETS, SHEET 1

NO. 4A TOLL

ORDER AS BSP ITEM MP-11648

ISSUE	1	A.S.M.	2	G.R.S.
DATE	8-30-51	R.B.B.	9-1-53	K.E.C.

2 SHEETS, SHEET 1

MP-11648

BELL TELEPHONE LABORATORIES, INC.

PRINTED IN U. S. A.

MP-11648 2 SHEETS, SHEET 2

ISSUE		
DATE		
8-30-51	1	A.S.M.
9-1-55	2	J.G.R. C.C.

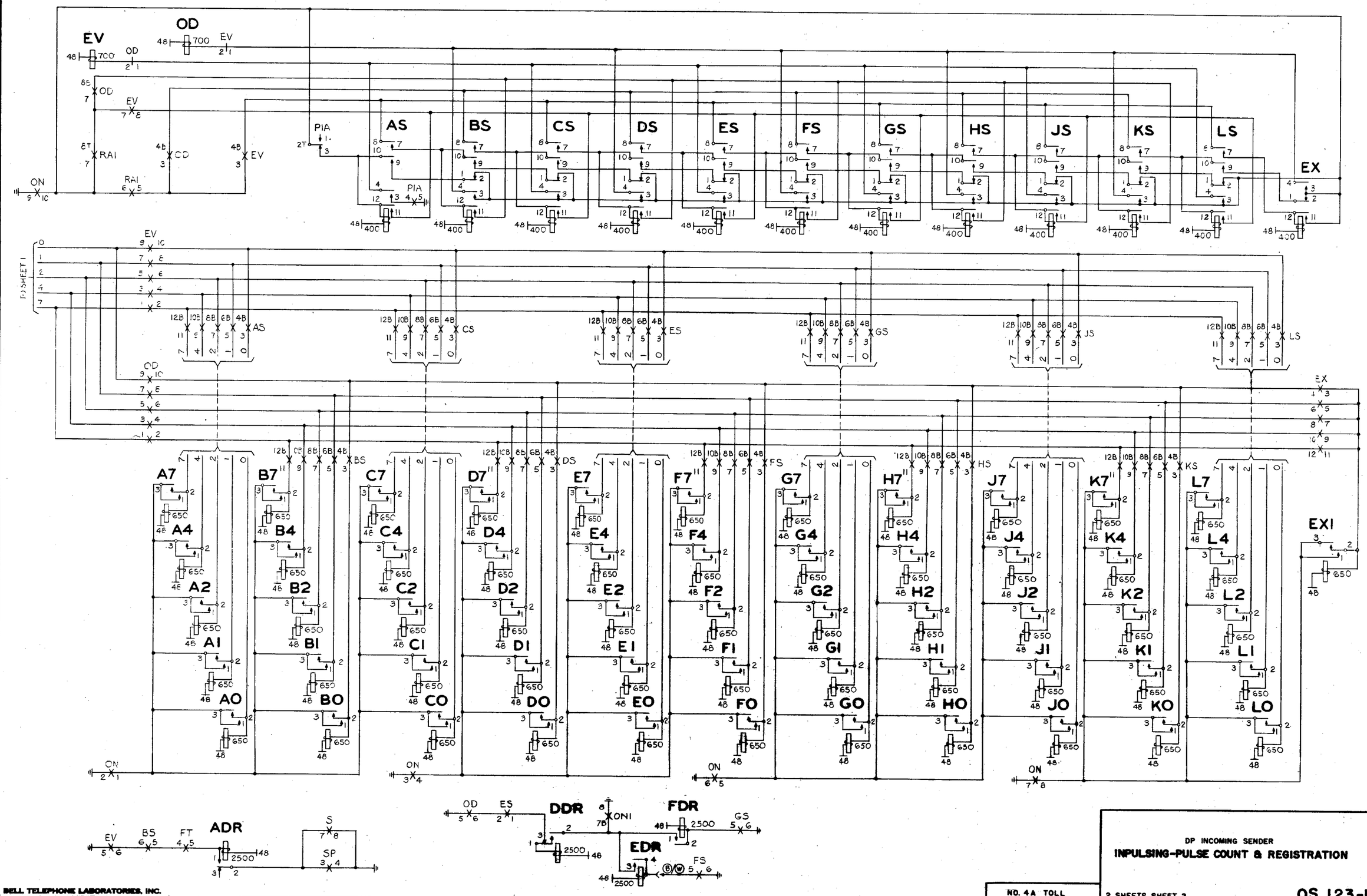

DP INCOMING SENDER

INPULSING-PULSE COUNT & REGISTRATION

NO. 4A TOLL

2 SHEETS, SHEET 2

OS 123-1

BELL TELEPHONE LABORATORIES, INC.

PRINTED IN U. S. A.

ORDER AS BSP ITEM MP-11648

MP-11649

ISSUE	DATE
1	8-10-67
2	8-1-69

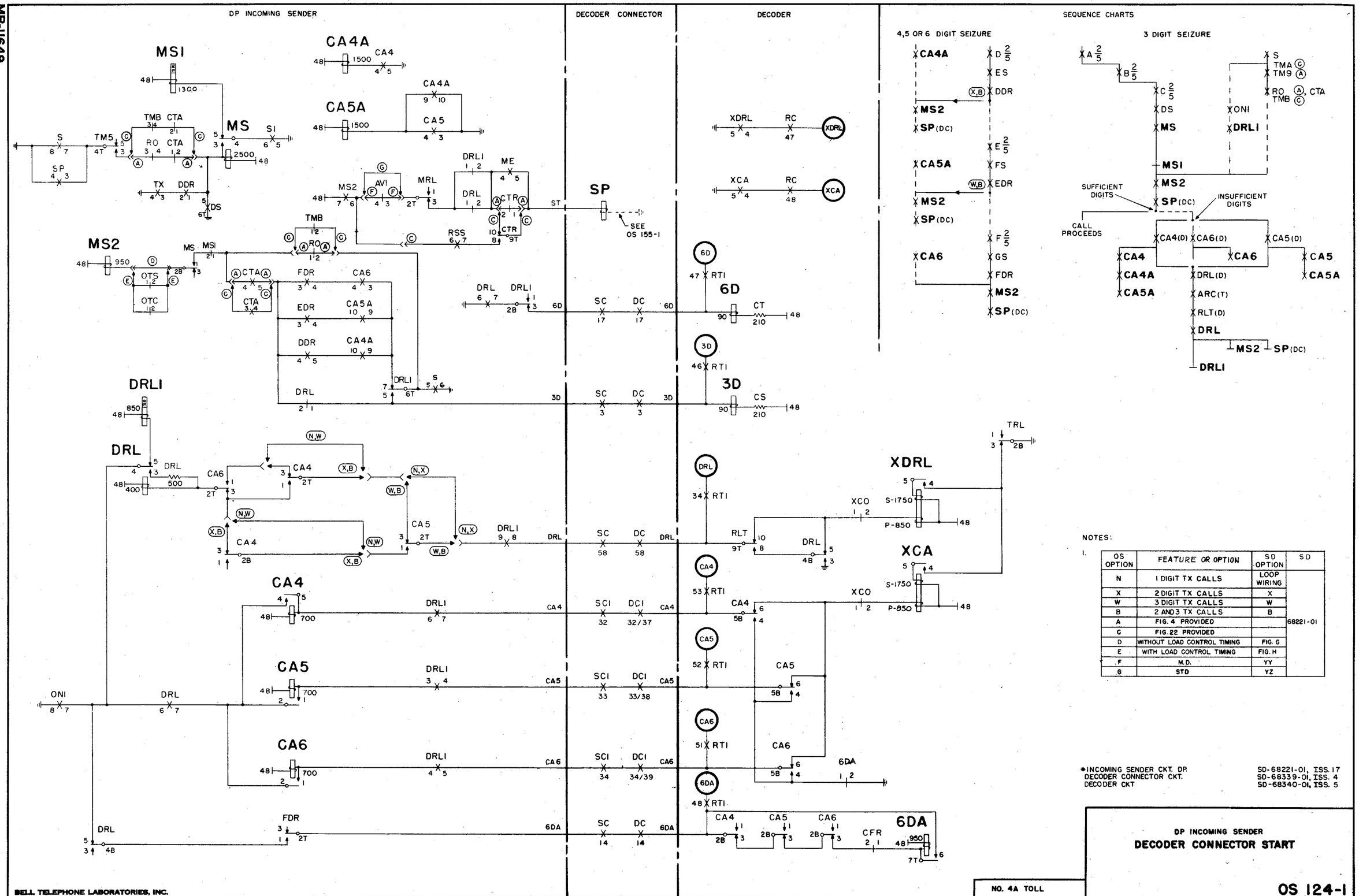

NOTES:

1.

OS OPTION	FEATURE OR OPTION	SD OPTION	SD
N	1 DIGIT TX CALLS	LOOP WIRING	68221-01
X	2 DIGIT TX CALLS	X	
W	3 DIGIT TX CALLS	W	
B	2 AND 3 TX CALLS	B	
A	FIG. 4 PROVIDED		
C	FIG. 22 PROVIDED		
D	WITHOUT LOAD CONTROL TIMING	FIG. G	
E	WITH LOAD CONTROL TIMING	FIG. H	
F	M.D.	YY	
G	STD	YZ	

*INCOMING SENDER CKT. DP.
DECODER CONNECTOR CKT.
DECODER CKT

SD-68221-01, ISS. 17
SD-68339-01, ISS. 4
SD-68340-01, ISS. 5

DP INCOMING SENDER
DECODER CONNECTOR START

NO. 4A TOLL

OS 124-1

BELL TELEPHONE LABORATORIES, INC.
PRINTED IN U. S. A.
ORDER AS BSP ITEM, MP-11649

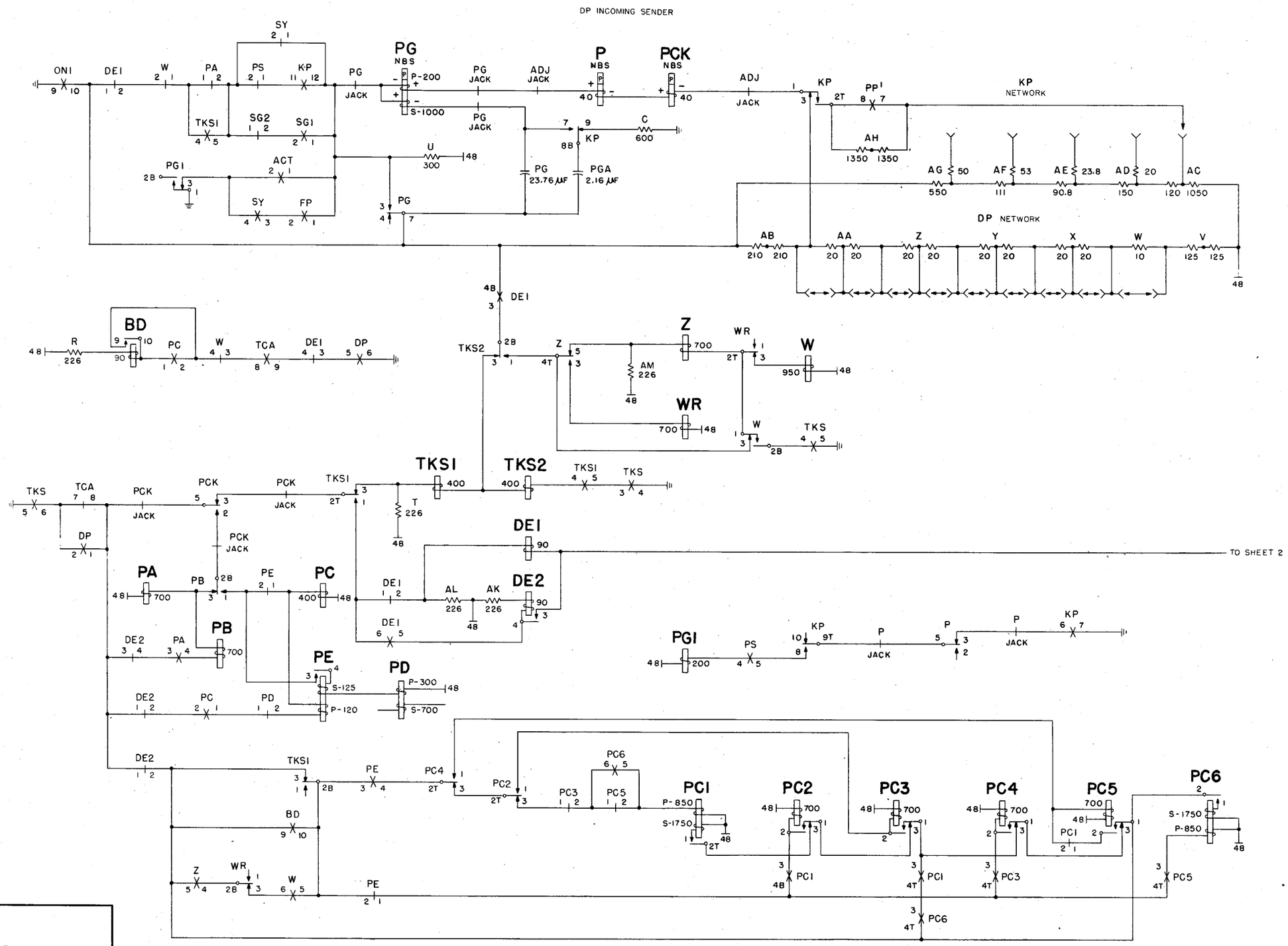

DP INCOMING SENDER
PULSE GENERATION & RECAPTURE

OS 125-1 2 SHEETS, SHEET 1

NO. 4A TOLL

ORDER AS BSP ITEM MP-11675

ISSUE	1	2
DATE	8-13-51	8-24-53

2 SHEETS, SHEET 1

MP-11675

BELL TELEPHONE LABORATORIES, INC.

PRINTED IN U. S. A.

MP-11675

2 SHEETS, SHEET 2

ISSUE		
1	A.S.H. R.B.B.	8-13-51
2	R.W.F. J.F.C.	8-24-53

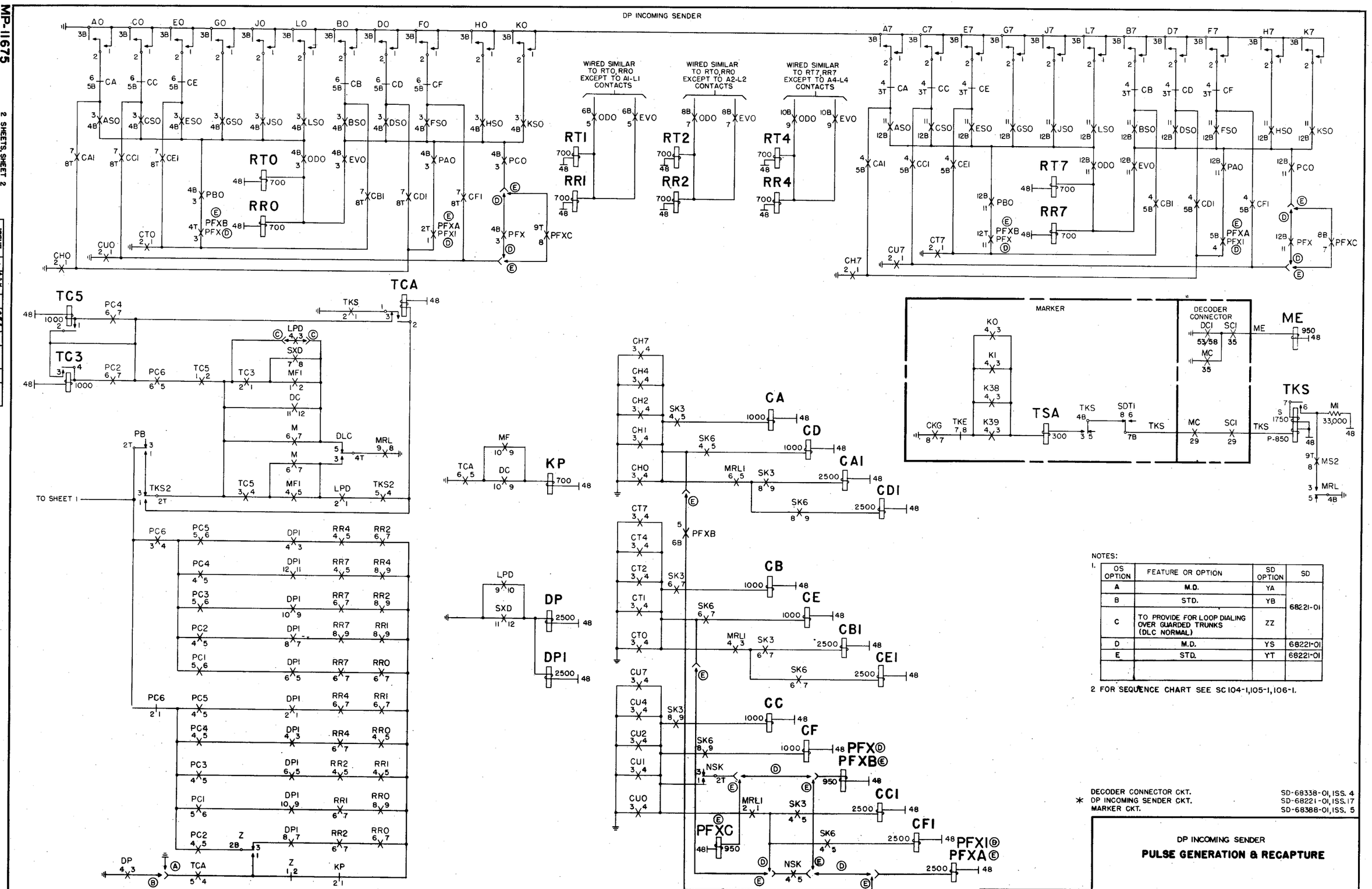

NOTES:

1.

OS OPTION	FEATURE OR OPTION	SD OPTION	SD
A	M.D.	YA	68221-01
B	STD.	YB	
C	TO PROVIDE FOR LOOP DIALING OVER GUARDED TRUNKS (DLC NORMAL)	ZZ	
D	M.D.	YS	68221-01
E	STD.	YT	68221-01

2 FOR SEQUENCE CHART SEE SC 104-1, 105-1, 106-1.

*	DECODER CONNECTOR CKT.	SD-68338-01, ISS. 4
	DP INCOMING SENDER CKT.	SD-68221-01, ISS. 17
	MARKER CKT.	SD-68388-01, ISS. 5

DP INCOMING SENDER

PULSE GENERATION & RECAPTURE

NO. 4A TOLL

2 SHEETS, SHEET 2

OS 125-1

BELL TELEPHONE LABORATORIES, INC.

PRINTED IN U. S. A.

ORDER AS BSP ITEM MP-11675

MP-11676

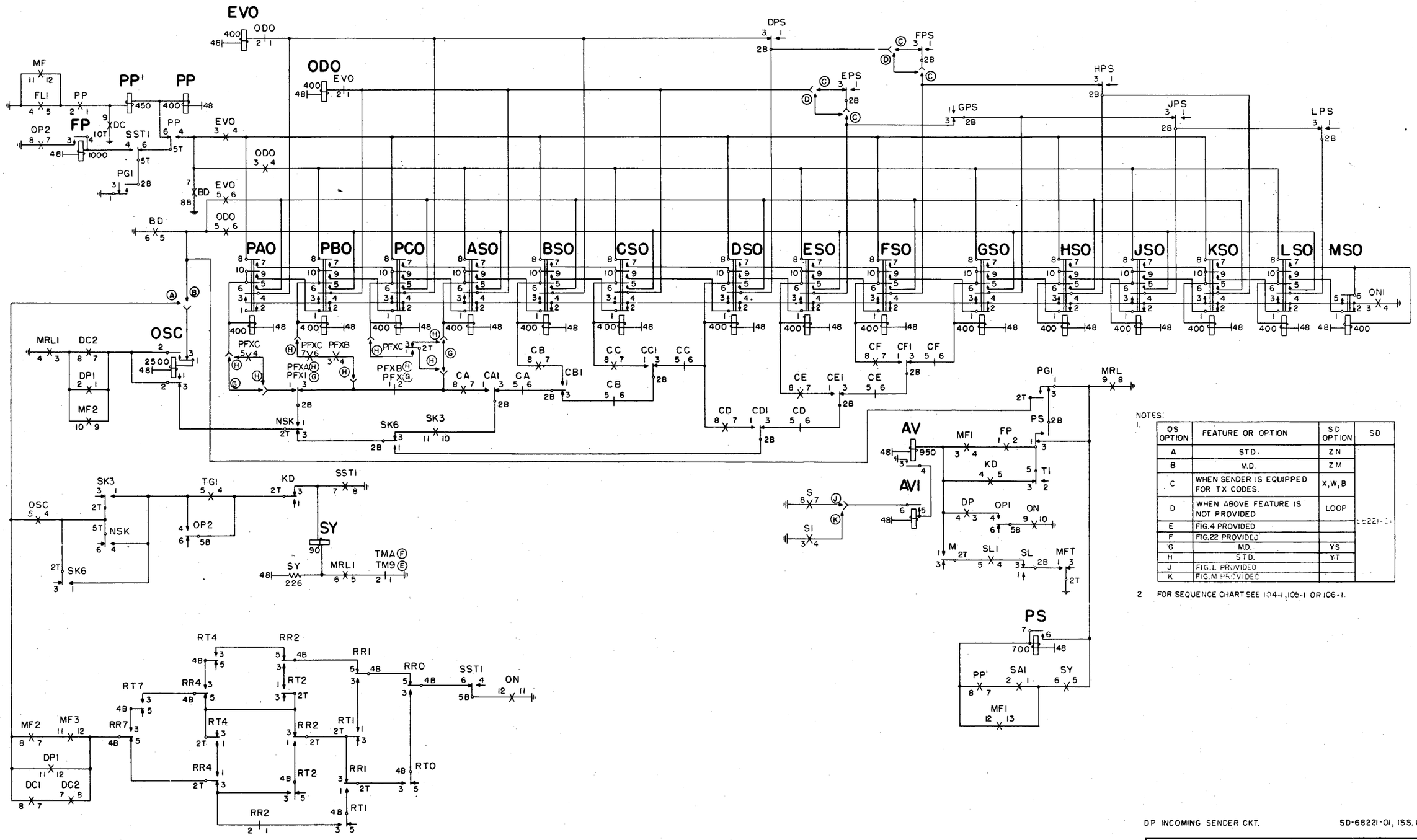

DATE	ISSUE	
8-10-61	1	1-1-5 X 5.8.9
8-19-55	2	6.9

NOTES:
1.

OS OPTION	FEATURE OR OPTION	SD OPTION	SD
A	STD.	ZN	
B	M.D.	ZM	
C	WHEN SENDER IS EQUIPPED FOR TX CODES.	X,W,B	
D	WHEN ABOVE FEATURE IS NOT PROVIDED	LOOP	
E	FIG.4 PROVIDED		
F	FIG.22 PROVIDED		
G	M.D.	YS	
H	STD.	YT	
J	FIG.L PROVIDED		
K	FIG.M PROVIDED		

2 FOR SEQUENCE CHART SEE 104-1, 105-1 OR 106-1.

DP INCOMING SENDER CKT. SD-68221-01, ISS. 17

DP INCOMING SENDER
OUTSTEERING CONTROL

NO. 4A TOLL

OS 126-1

BELL TELEPHONE LABORATORIES, INC.
PRINTED IN U. S. A.
ORDER AS BSP ITEM MP-11676

DP INCOMING SENDER

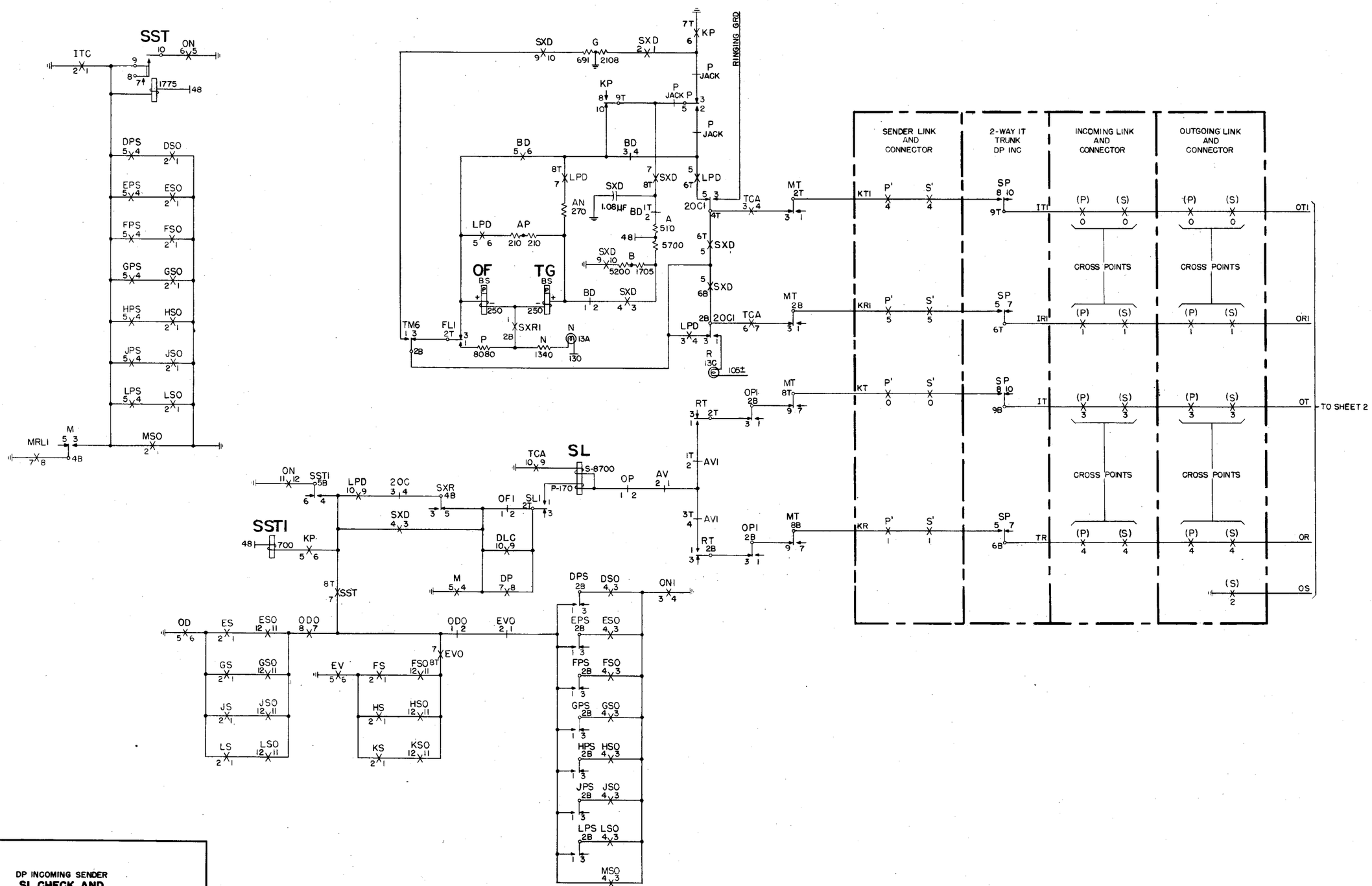

DP INCOMING SENDER
SL CHECK AND
SX AND LOOP OUTPULSING

OS 127-1

2 SHEETS, SHEET 1

NO. 4A TOLL

ORDER AS BSP ITEM MP-11678

ISSUE	1	2
DATE	8-7-51	7-27-53

2 SHEETS, SHEET 1

MP-11678

BELL TELEPHONE LABORATORIES, INC.

PRINTED IN U. S. A.

MP-11678

2 SHEETS, SHEET 2

DATE	ISSUE	
8-7-51	1	13.1.1 / 8.2.1 / 8.2.2
7-27-53	2	8.2.3 / 8.2.2

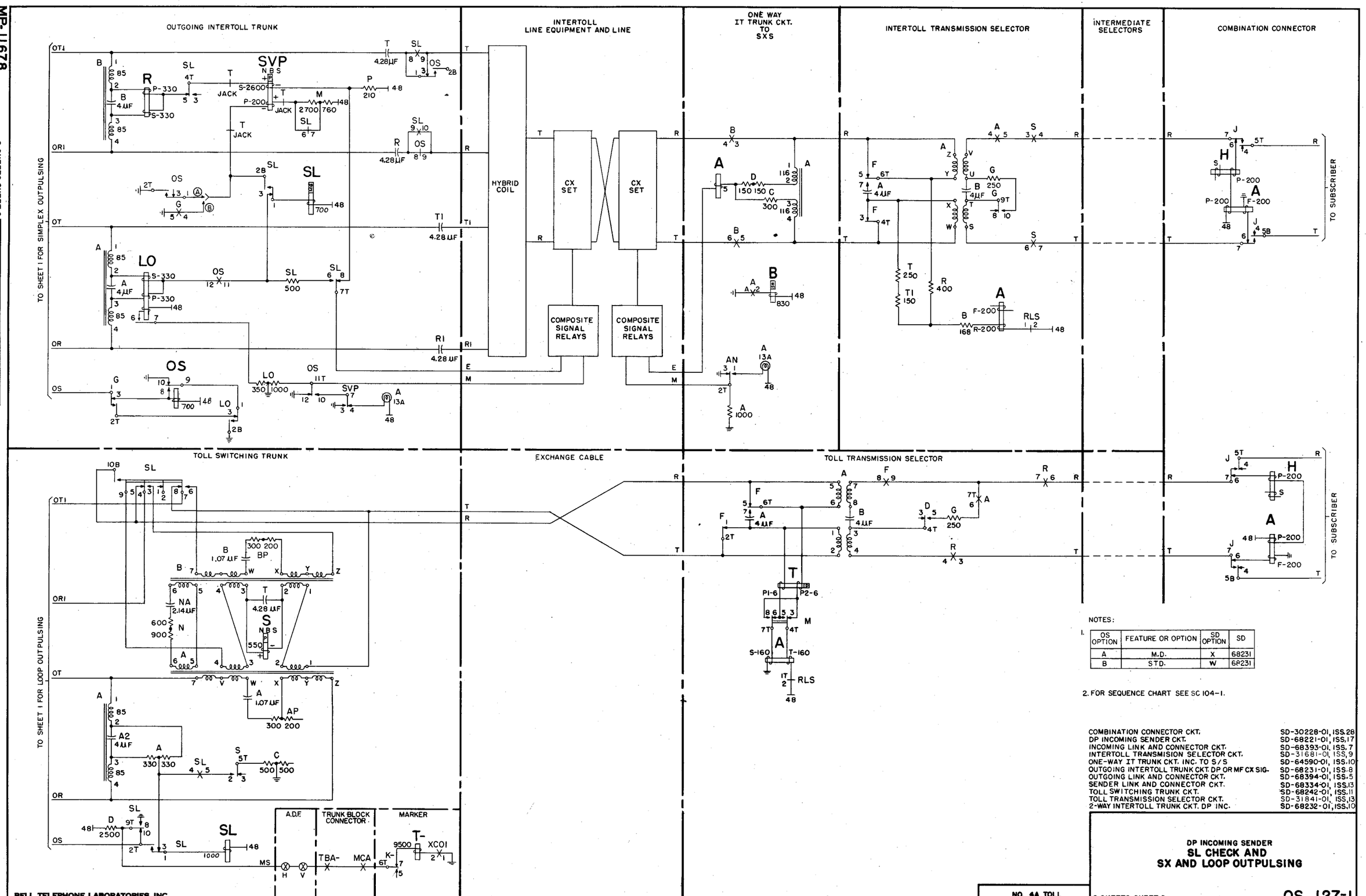

NOTES:

1.

OS OPTION	FEATURE OR OPTION	SD OPTION	SD
A	M.D.	X	68231
B	STD.	W	68231

2. FOR SEQUENCE CHART SEE SC 104-1.

COMBINATION CONNECTOR CKT.	SD-30228-01, ISS.28
DP INCOMING SENDER CKT.	SD-68221-01, ISS.17
INCOMING LINK AND CONNECTOR CKT.	SD-68393-01, ISS.7
INTERTOLL TRANSMISION SELECTOR CKT.	SD-31681-01, ISS.9
ONE-WAY IT TRUNK CKT. INC. TO S/S	SD-64590-01, ISS.10
OUTGOING INTERTOLL TRUNK CKT. DP OR MF CX SIG.	SD-68231-01, ISS.8
OUTGOING LINK AND CONNECTOR CKT.	SD-68394-01, ISS.5
SENDER LINK AND CONNECTOR CKT.	SD-68334-01, ISS.13
TOLL SWITCHING TRUNK CKT.	SD-68242-01, ISS.11
TOLL TRANSMISSION SELECTOR CKT.	SD-31841-01, ISS.13
2-WAY INTERTOLL TRUNK CKT. DP INC.	SD-68232-01, ISS.10

DP INCOMING SENDER

SL CHECK AND SX AND LOOP OUTPULSING

NO. 4A TOLL

2 SHEETS, SHEET 2

OS 127-1

BELL TELEPHONE LABORATORIES, INC.

PRINTED IN U. S. A.

ORDER AS BSP ITEM MP-11678

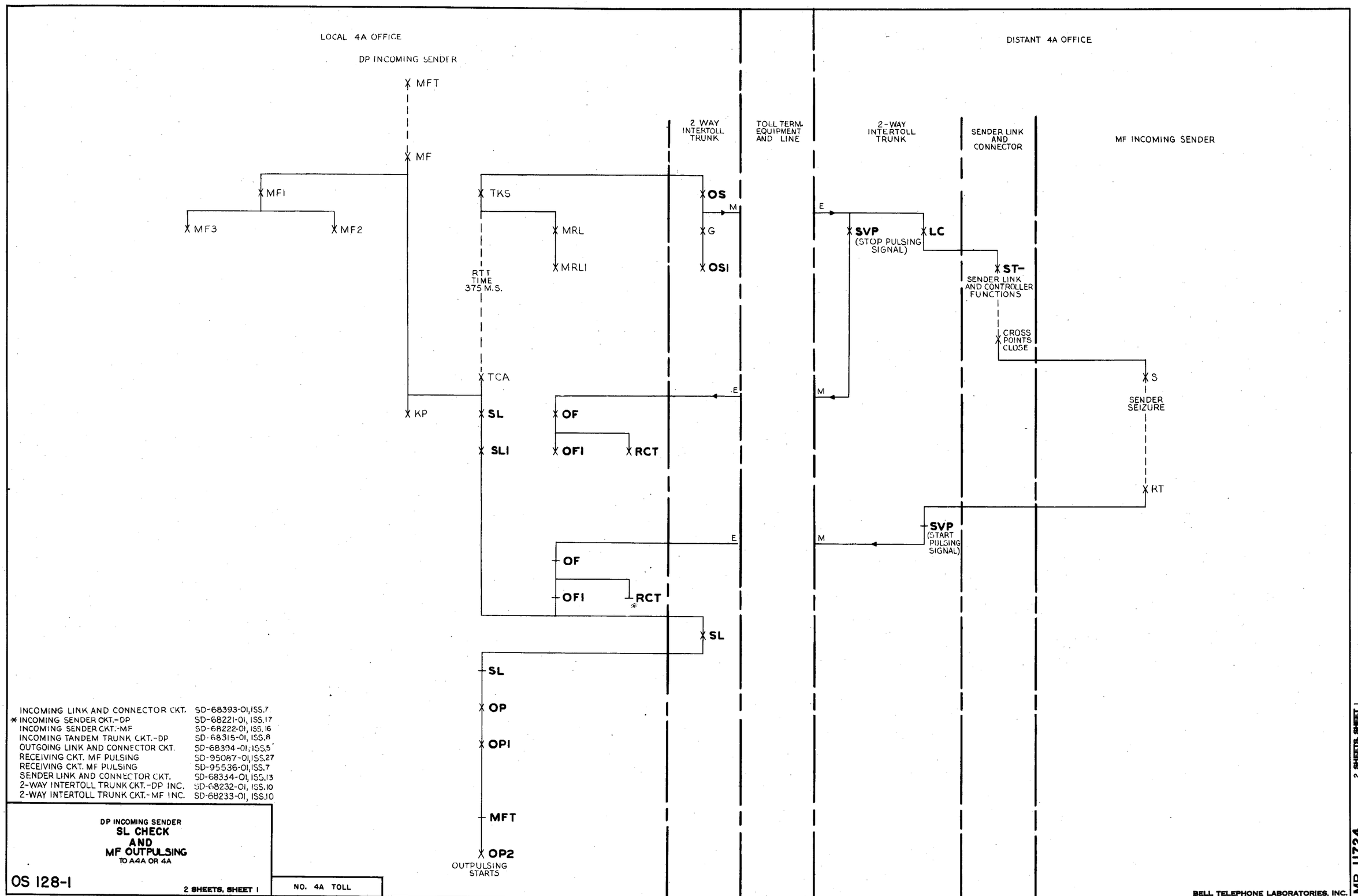

INCOMING LINK AND CONNECTOR CKT.	SD-68393-01, ISS.7
* INCOMING SENDER CKT.-DP	SD-68221-01, ISS.17
INCOMING SENDER CKT.-MF	SD-68222-01, ISS.16
INCOMING TANDEM TRUNK CKT.-DP	SD-68315-01, ISS.8
OUTGOING LINK AND CONNECTOR CKT.	SD-68394-01, ISS.5
RECEIVING CKT. MF PULSING	SD-95087-01, ISS.27
RECEIVING CKT. MF PULSING	SD-95536-01, ISS.7
SENDER LINK AND CONNECTOR CKT.	SD-68334-01, ISS.13
2-WAY INTERTOLL TRUNK CKT.-DP INC.	SD-68232-01, ISS.10
2-WAY INTERTOLL TRUNK CKT.-MF INC.	SD-68233-01, ISS.10

DP INCOMING SENDER
SL CHECK AND MF OUTPULSING
TO A4A OR 4A

OS 128-1

2 SHEETS, SHEET 1

NO. 4A TOLL

ORDER AS BSP ITEM MP-11724

ISSUE	1	A.S.M. R.B.B.	2	W.F.E. W.F.C.
DATE	11-28-51		8-18-53	

2 SHEETS, SHEET 1

MP-11724

BELL TELEPHONE LABORATORIES, INC.

PRINTED IN U. S. A.

MP-11724

2 SHEETS, SHEET 2

ISSUE	DATE	
1	11-28-51	J.R.K.
2	8-11-53	J.R.S.

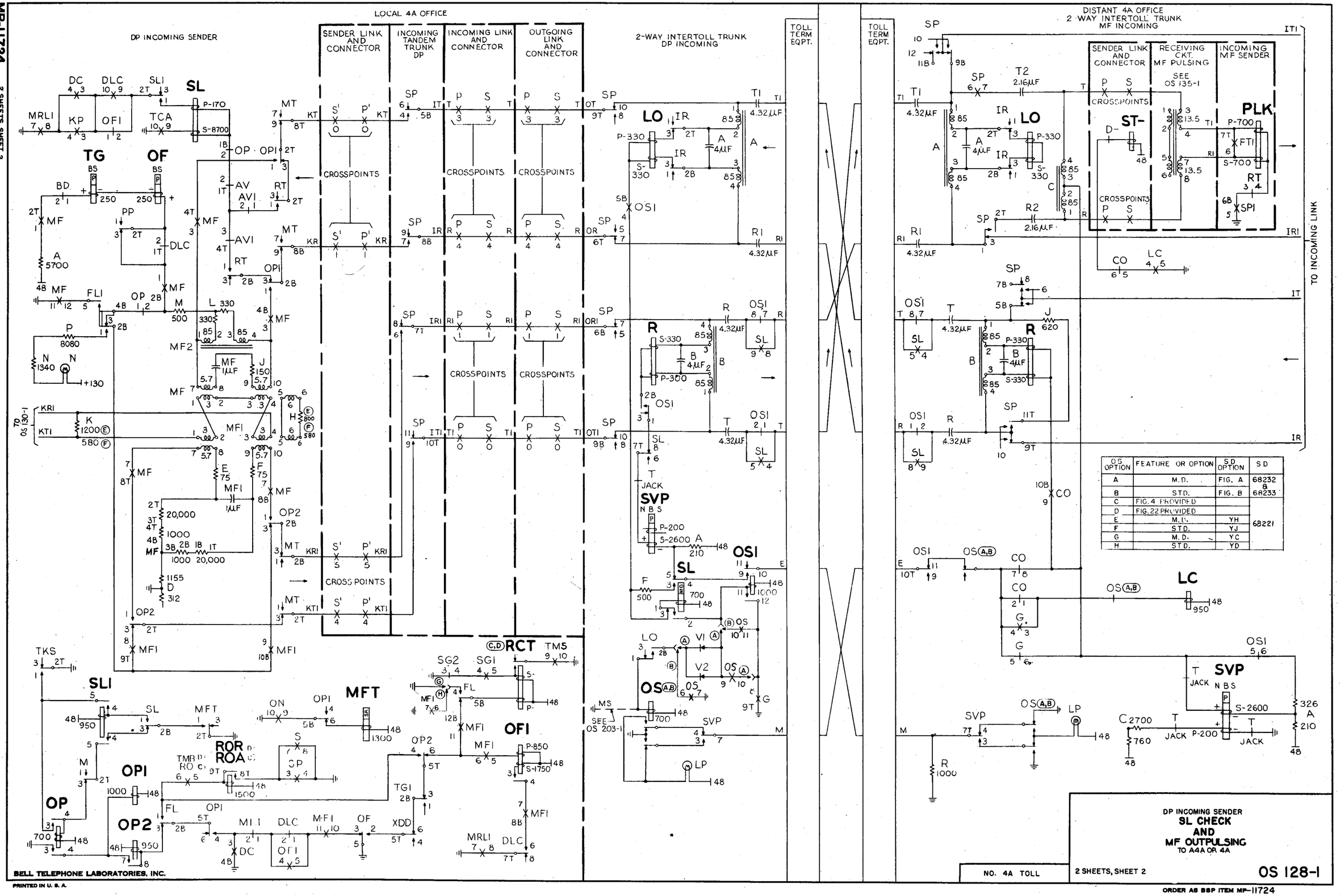

OS OPTION	FEATURE OR OPTION	SD OPTION	SD
A	M.D.	FIG. A	68232
B	STD.	FIG. B	68233
C	FIG. 4 PROVIDED		
D	FIG. 22 PROVIDED		
E	M.D.	YH	68221
F	STD.	YJ	
G	M.D.	YC	
H	STD.	YD	

BELL TELEPHONE LABORATORIES, INC.

PRINTED IN U. S. A.

ORDER AS BSP ITEM MP-11724

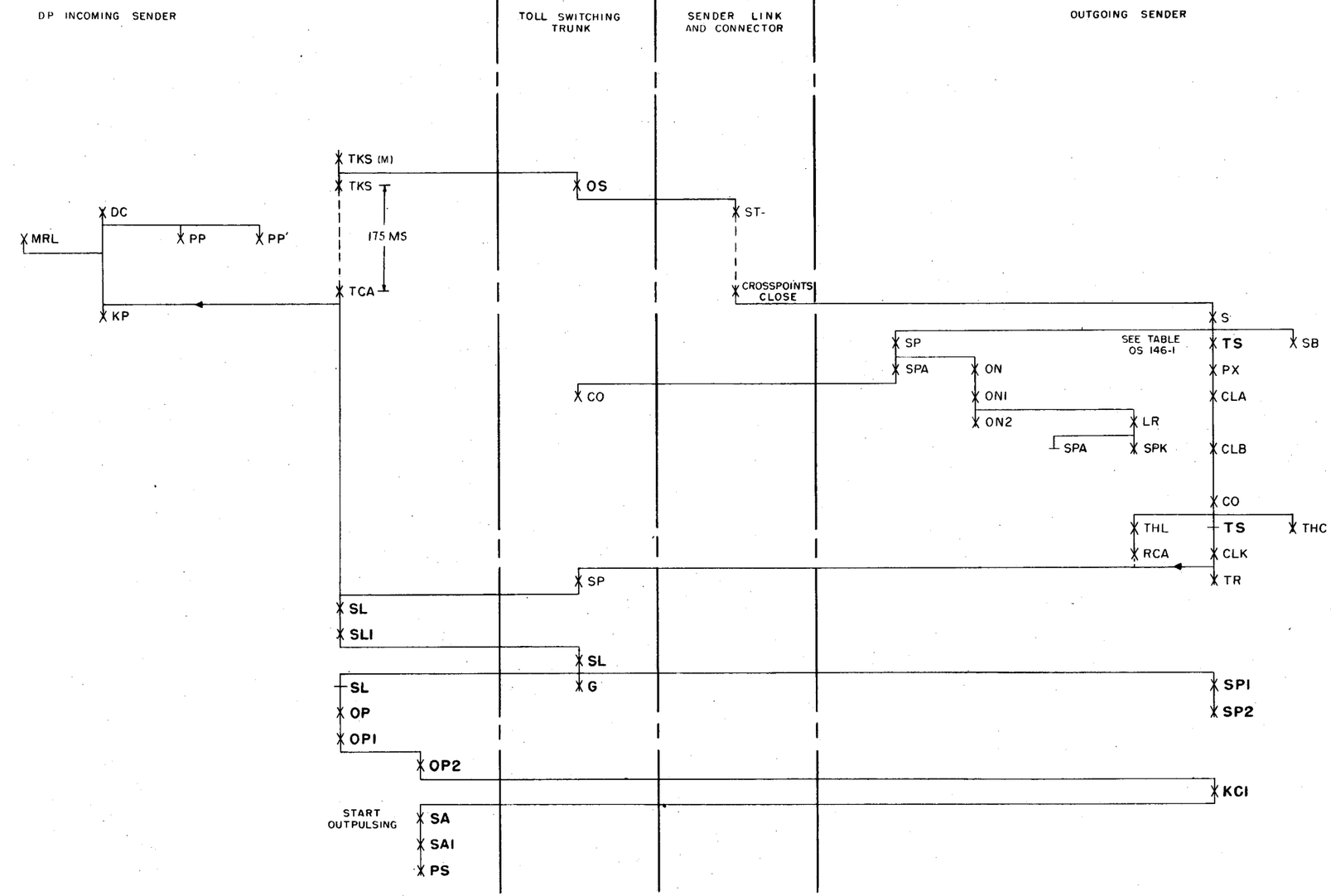

INCOMING LINK & CONNECTOR CKT.	SD-68393-01, ISS. 7
INCOMING TANDEM TRK. CKT.-DP	SD-68315-01, ISS. 8
*INCOMING SENDER CKT.-DP	SD-68221-01, ISS.17
INTERRUPTER FRAME CKT.	SD-68058-01, ISS.15
OUTGOING LINK & CONNECTOR CKT.	SD-68394-01, ISS. 5
OUTGOING SENDER CKT.	SD-68018-01, ISS.23
SENDER LINK & CONNECTOR CKT.	SD-68334-01, ISS.13
TOLL SWITCHING TRK. CKT. REV OR P.C.I.	SD-68326-01, ISS.10

DP INCOMING SENDER

SL CHECK AND SYNCHRONIZATION WITH OUTGOING SENDER

OS 129-1

2 SHEETS, SHEET 1

NO. 4A TOLL

ISSUE	1	A.S.R. 2	L.K.F.
DATE	11-19-51	8-19-55	

2 SHEETS, SHEET 1

MP-11725

BELL TELEPHONE LABORATORIES, INC.

ORDER AS BSP ITEM MP-11725

PRINTED IN U. S. A.

MP-11725 2 SHEETS, SHEET 2

ISSUE			
DATE	1	2	
11-10-51	8-19-59		

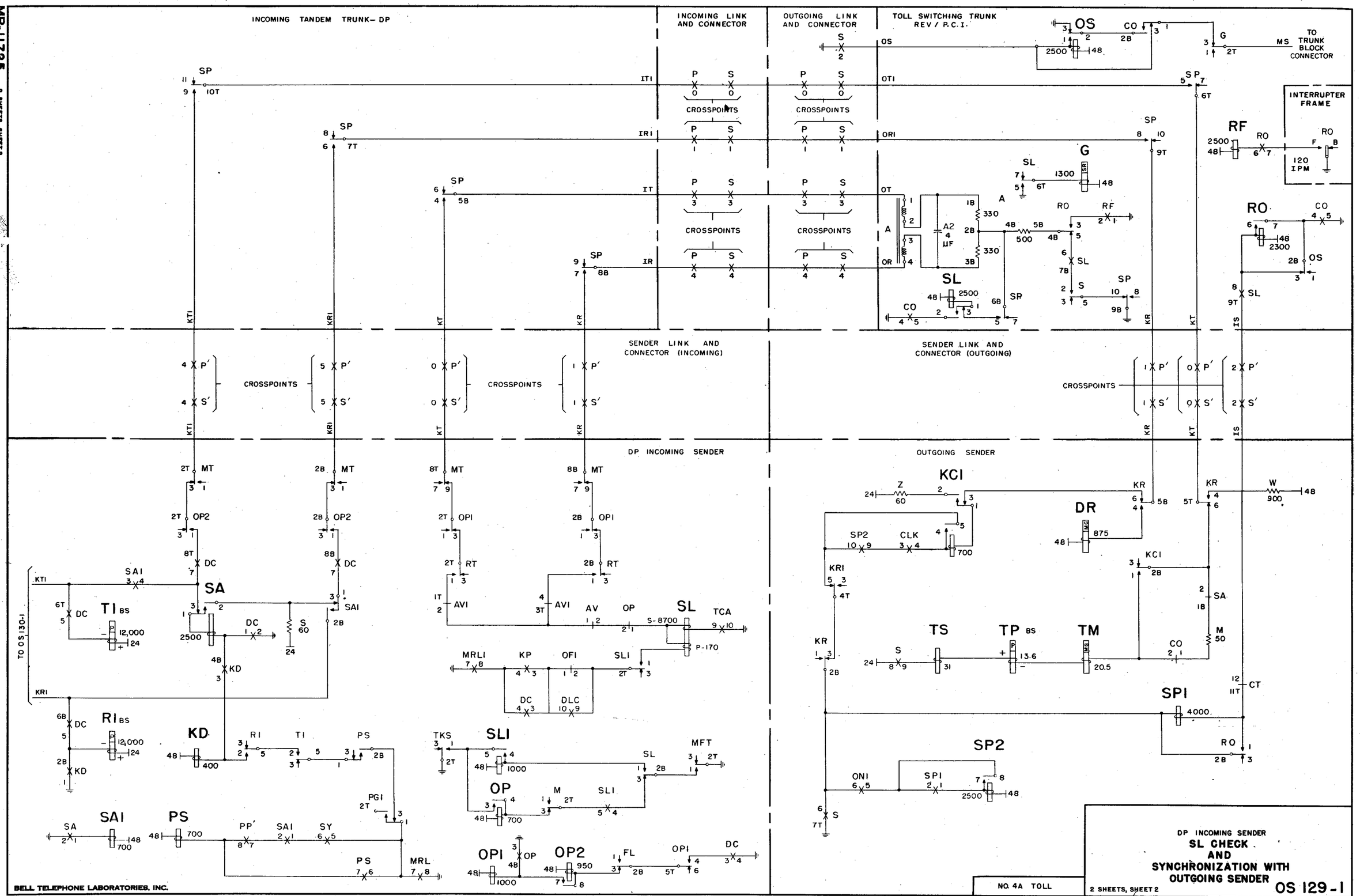

BELL TELEPHONE LABORATORIES, INC.

PRINTED IN U. S. A.

ORDER AS BSP ITEM MP-11725

MP-11726

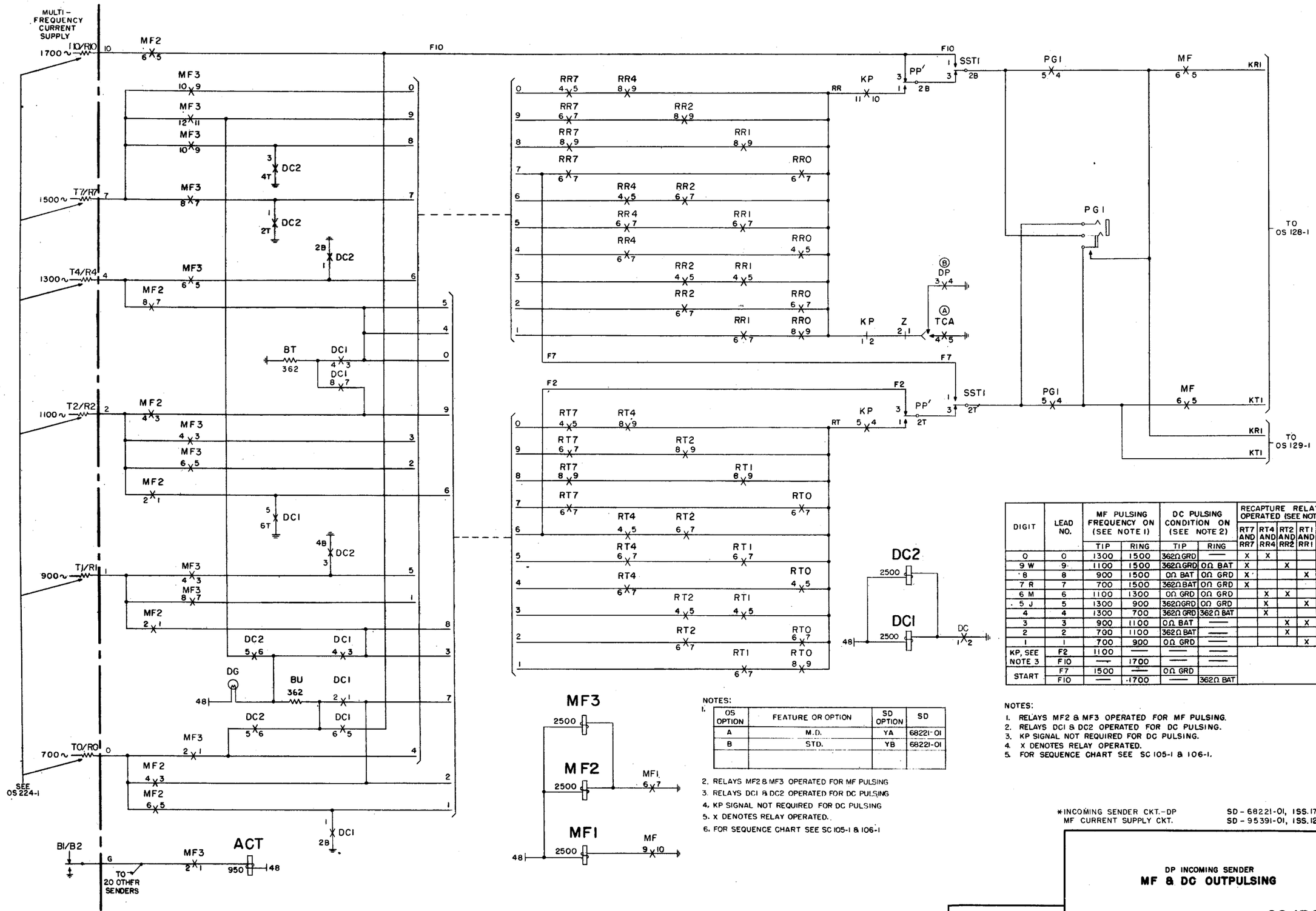

DIGIT	LEAD NO.	MF PULSING FREQUENCY ON (SEE NOTE 1)		DC PULSING CONDITION ON (SEE NOTE 2)		RECAPTURE RELAYS OPERATED (SEE NOTE 4)				
		TIP	RING	TIP	RING	RT7 AND RR7	RT4 AND RR4	RT2 AND RR2	RT1 AND RR1	RTO AND RRO
0	0	1300	1500	362Ω GRD	—	X	X			
9 W	9	1100	1500	362Ω GRD	0Ω BAT	X		X		
8	8	900	1500	0Ω BAT	0Ω GRD	X			X	
7 R	7	700	1500	362Ω BAT	0Ω GRD	X				X
6 M	6	1100	1300	0Ω GRD	0Ω GRD		X	X		
5 J	5	1300	900	362Ω GRD	0Ω GRD		X		X	
4	4	1300	700	362Ω GRD	362Ω BAT		X			X
3	3	900	1100	0Ω BAT	—			X	X	
2	2	700	1100	362Ω BAT	—			X		X
1	1	700	900	0Ω GRD	—				X	X
KP, SEE	F2	1100	—	—	—					
NOTE 3	F10	—	1700	—	—					
START	F7	1500	—	0Ω GRD						
	F10	—	1700	—	362Ω BAT					

NOTES:

1. RELAYS MF2 & MF3 OPERATED FOR MF PULSING.
2. RELAYS DC1 & DC2 OPERATED FOR DC PULSING.
3. KP SIGNAL NOT REQUIRED FOR DC PULSING.
4. X DENOTES RELAY OPERATED.
5. FOR SEQUENCE CHART SEE SC 105-1 & 106-1.

NOTES:

1.

OS OPTION	FEATURE OR OPTION	SD OPTION	SD
A	M.D.	YA	68221-01
B	STD.	YB	68221-01

2. RELAYS MF2 & MF3 OPERATED FOR MF PULSING
3. RELAYS DC1 & DC2 OPERATED FOR DC PULSING
4. KP SIGNAL NOT REQUIRED FOR DC PULSING
5. X DENOTES RELAY OPERATED.
6. FOR SEQUENCE CHART SEE SC 105-1 & 106-1

*INCOMING SENDER CKT.-DP — SD-68221-01, ISS. 17
MF CURRENT SUPPLY CKT. — SD-95391-01, ISS. 12

ISSUE	1	2
DATE	11-26-67	8-14-69

NO. 4A TOLL

DP INCOMING SENDER
MF & DC OUTPULSING

OS 130-1

BELL TELEPHONE LABORATORIES, INC.
PRINTED IN U. S. A.

ORDER AS BSP ITEM MP-11726

SEQUENCE CHARTS

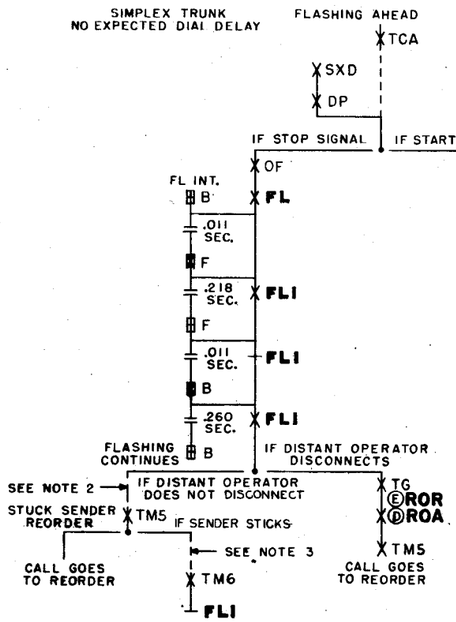

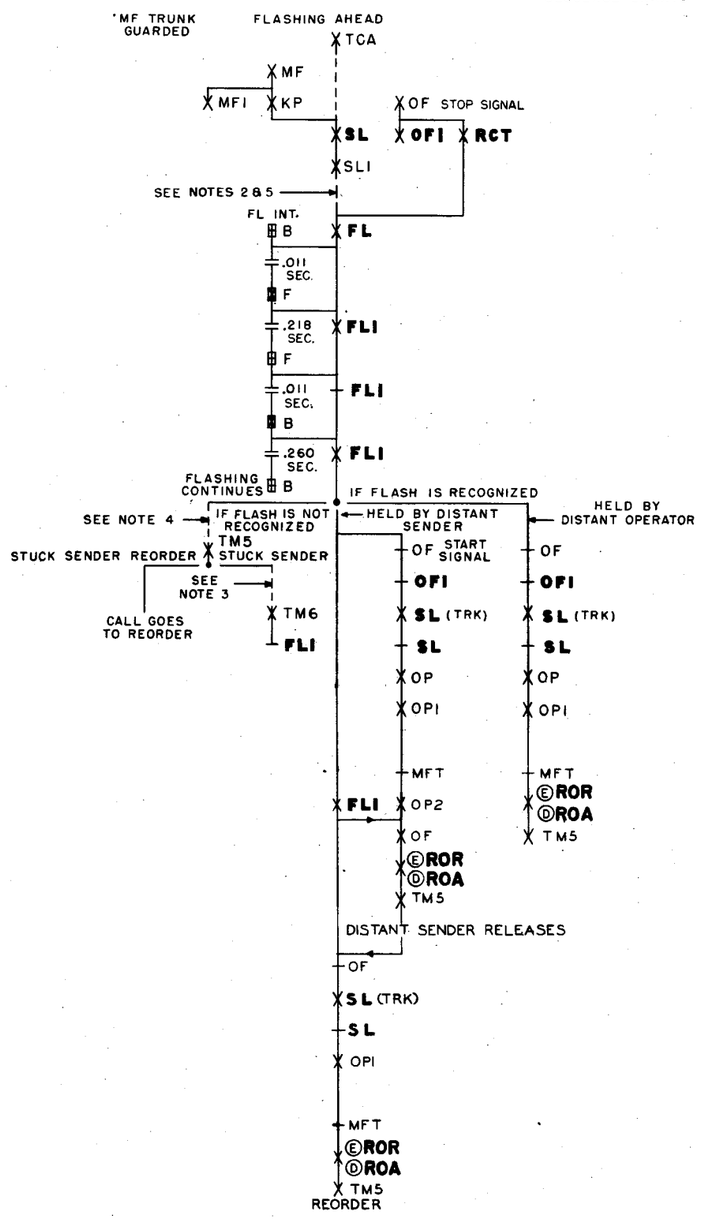

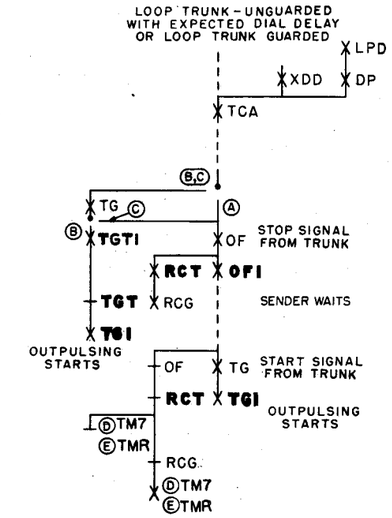

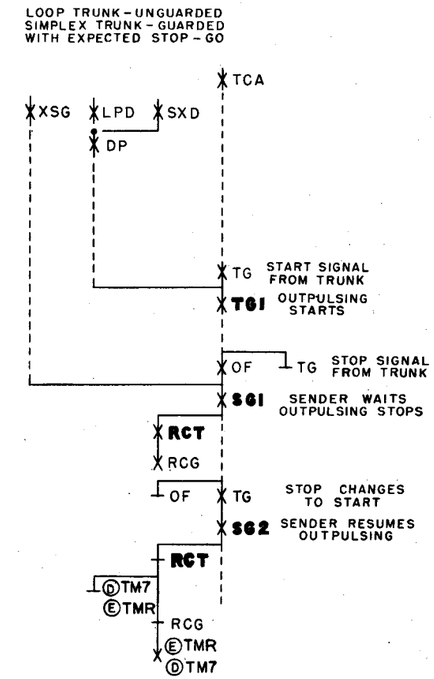

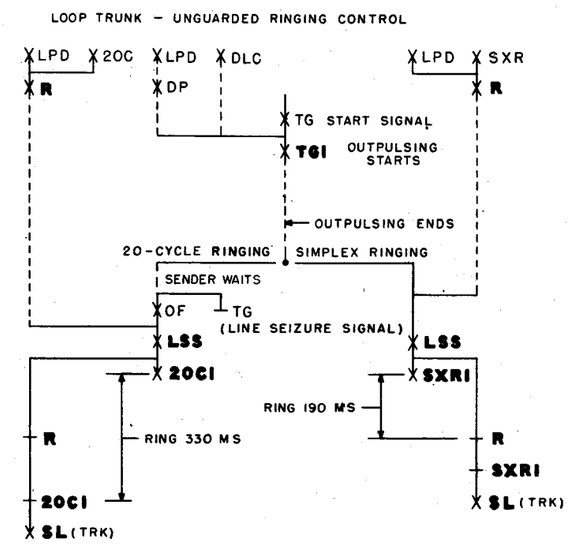

NOTES:

1.

OS OPTION	FEATURE OR OPTION	SD OPTION	SD
A	IF INITIAL SIGNAL IS STOP & IS FOLLOWED BY START		68221-01
B	IF INITIAL SIGNAL IS START & DOES NOT CHANGE		
C	IF INITIAL SIGNAL IS START & IS FOLLOWED BY STOP		
D	FIG. 4 PROVIDED		
E	FIG. 22 PROVIDED		
YC	STD.	YC	
YD	M.D.	YD	
ZY	TO PREVENT BLOCKING OF OUTPULSING WITH XSG OPERATED.	ZY	

2. SENDER IN ORIGINATING OFFICE TIMES OUT IN 30-40 SECONDS IF NO RESPONSE IS RECEIVED.
3. SENDER TIMES 10 SECONDS MORE, THEN OPERATES TM6 TO STOP FLASHING.
4. IF FLASH IS NOT RECOGNIZED IN 10-20 SECONDS.
5. ASSUME SENDER IN DISTANT OFFICE TIMES OUT LATER THAN SENDER IN ORIGINATING OFFICE.

DIAL PULSE INCOMING SENDER CKT.	SD-68221-01, ISS. 17
INTERRUPTER FRAME CKT.	SD-68058-01, ISS. 15
OUTGOING INTERTOLL TRK. CKT. DP/MF	SD-68231-01, ISS. 8

DP INCOMING SENDER
RINGING AND STOP CONTROL
FLASHING AHEAD

OS 131-1 2 SHEETS, SHEET 1

NO. 4A TOLL

ORDER AS BSP ITEM MP-11710

ISSUE	1	A.S.K.	2	G.K.S.
		C.B.B.		R.L.C.
DATE		9-24-57		8-11-55

2 SHEETS, SHEET 1

MP-11710

BELL TELEPHONE LABORATORIES, INC.
PRINTED IN U. S. A.

MP-11710

2 SHEETS, SHEET 2

ISSUE	1	2
DATE	9-24-51	8-11-53

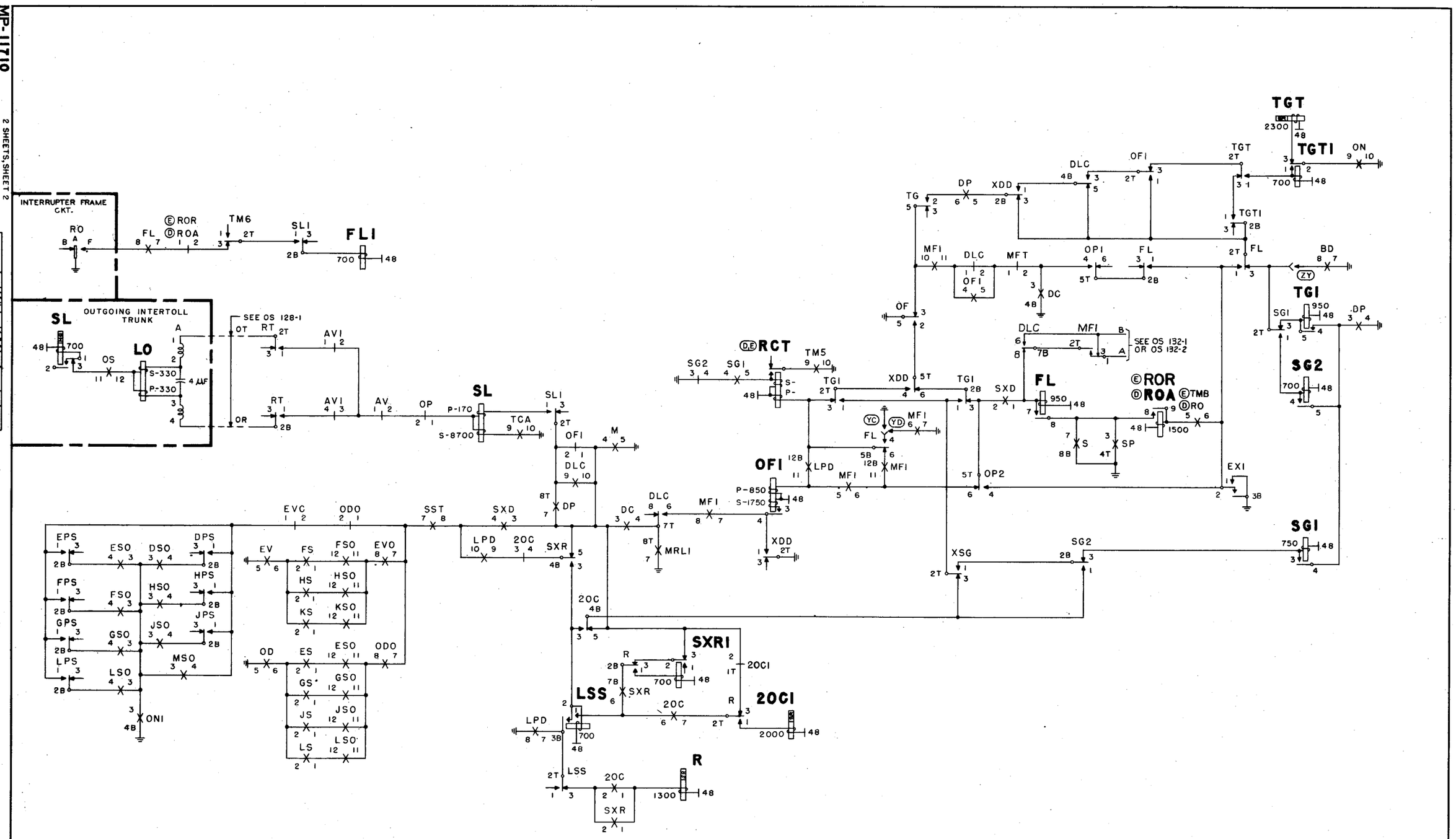

DP INCOMING SENDER

RINGING AND STOP CONTROL

FLASHING AHEAD

NO. 4A TOLL

2 SHEETS, SHEET 2

OS 131-1

BELL TELEPHONE LABORATORIES, INC.

PRINTED IN U. S. A.

ORDER AS BSP ITEM MP-11710

NOTES:

1.

OS OPTION	FEATURE OR OPTION	SD OPTION	SD
A	MANUFACTURE DISC.		68221-01
B	STANDARD		
C	MANUFACTURE DISC.	YQ	
D	STANDARD	YR	
E	LOAD CONTROL TIMING NOT PROVIDED	FIG.G	
F	LOAD CONTROL TIMING PROVIDED	FIG.H	
G	TRAFFIC USAGE RECORDER PROVIDED	YX	
H	TRAFFIC USAGE RECORDER NOT PROVIDED	FIG.L	
J	LOAD CONTROL TIMING WITH TRAFFIC USAGE RECORDER	FIG.M	

2. ONLY 3 DIGITS RECEIVED (SST RELAY NORMAL).

3. AVAILABLE CIRCUIT FOR CH RELAY, OR CTR KEY OPERATED, SST RELAY OPERATED.

4. NO AVAILABLE CIRCUIT FOR CH RELAY, CTR KEY NORMAL, SST RELAY OPERATED.

5 CTR KEY IS NORMAL AS SHOWN.

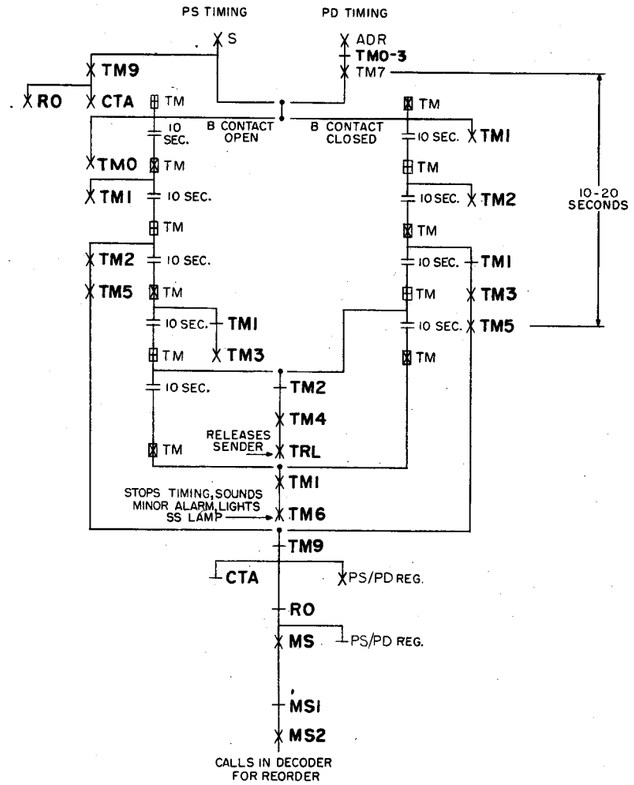

SEQUENCE CHART

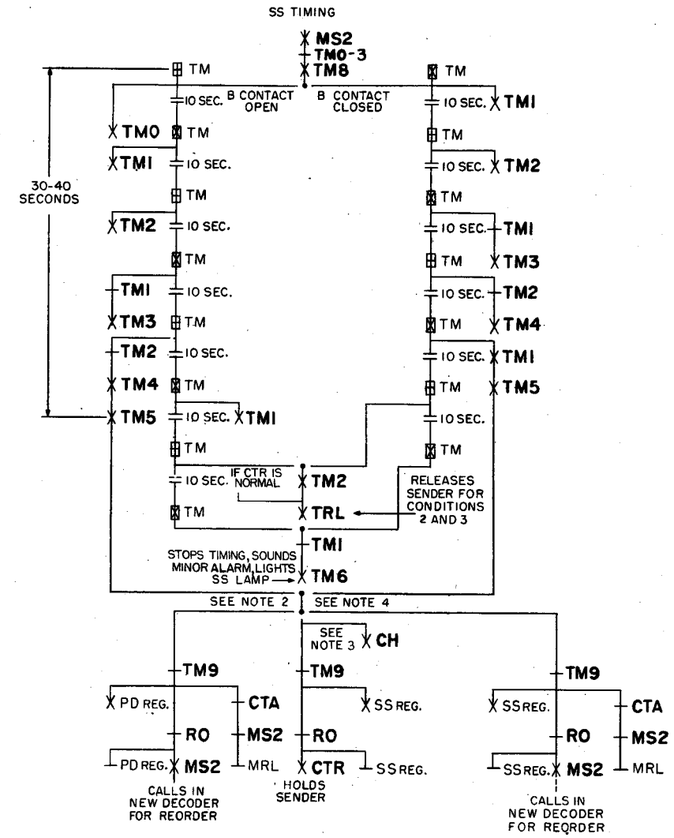

INTERRUPTER FRAME	SD-68058-01, ISS.15
*INCOMING SENDER CKT.-D.P.	SD-68221-01, ISS.17
DECODER CONNECTOR CKT.	SD-68339-01, ISS.4
DECODER CKT.	SD-68340-01, ISS.5
MISCELLANEOUS CKT. FOR SENDER MAKE-BUSY FR.	SD-68386-01, ISS.5
MARKER CKT.	SD-68388-01, ISS.5
MISCELLANEOUS CKT. FOR TROUBLE RECORDER	SD-68392-01, ISS.5
MARKER CONNECTOR CKT.	SD-68395-01, ISS.5
TRAFFIC REGISTER CKT.	SD-68412-01, ISS.7

D.P. INCOMING SENDER OVER-ALL TIMING FIG.4

OS 132-1

2 SHEETS, SHEET 1

NO. 4A TOLL

ORDER AS BSP ITEM MP-11759

ISSUE	1	W.A.K. R.B.B.	2	G.R.S. R.E.C.		
DATE	1-18-52		9-10-53			

2 SHEETS, SHEET 1

MP-11759

BELL TELEPHONE LABORATORIES, INC.

PRINTED IN U. S. A.

MP-11759

2 SHEETS, SHEET 2

ISSUE	DATE	
1	1-18-52	W.A.W. R.B.B.
2	9-10-53	C.P.S. R.F.C.

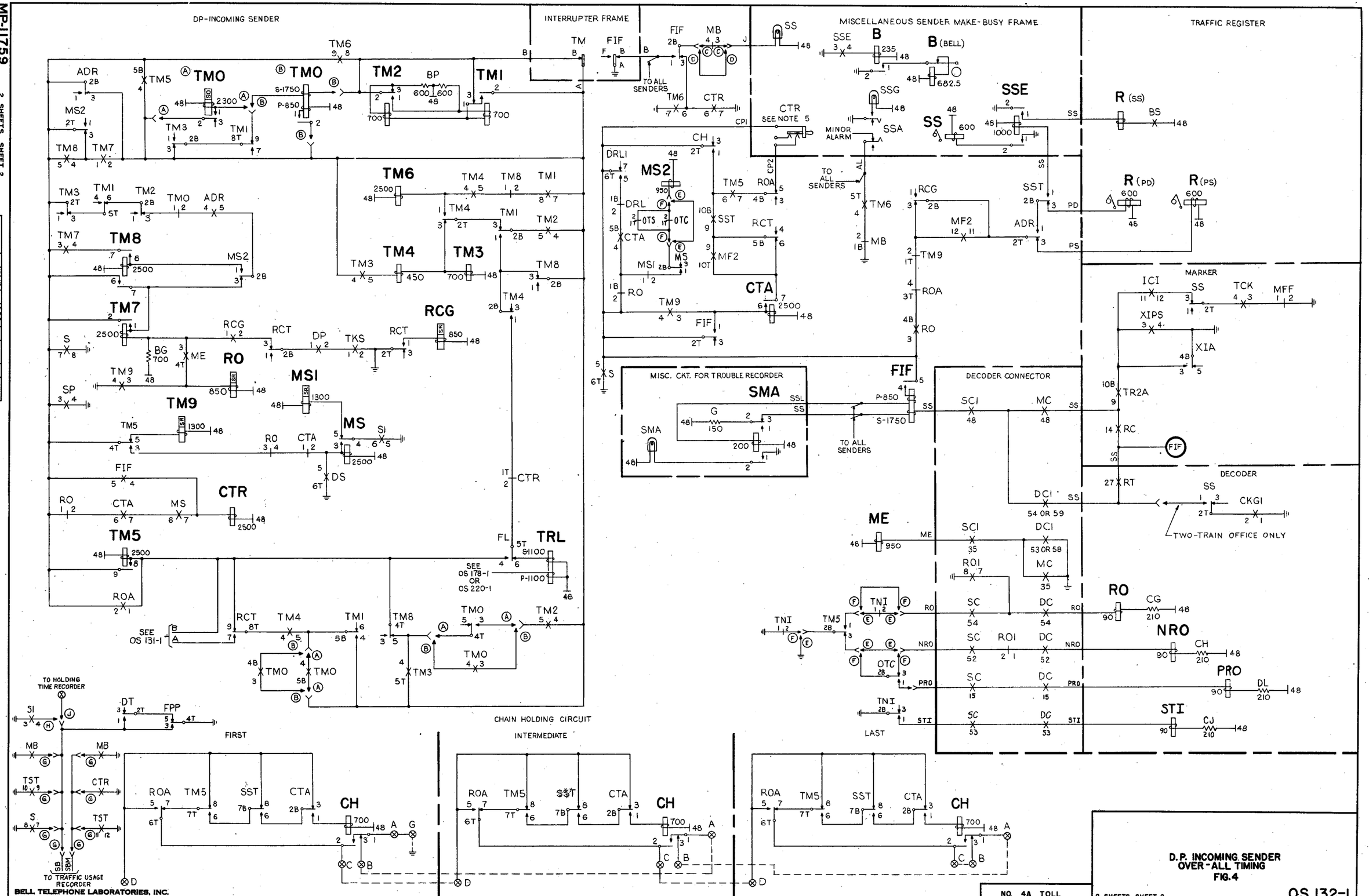

NOTES
1.

OS OPTION	FEATURE OR OPTION	SD OPTION	SD
A	LOAD CONTROL TIMING NOT PROVIDED	FIG G	68221-01
B	LOAD CONTROL TIMING PROVIDED	FIG H	68221-01
C	M. D.	YQ	68221-01
D	STD.	YR	68221-01
E	TRAFFIC USAGE RECORDER PROVIDED	YX	68221-01
F	TRAFFIC USAGE RECORDER NOT PROVIDED	FIG L	68221-01
G	LOAD CONTROL TIMING PROVIDED WITH TRAFFIC USAGE RECORDER	FIG M	68221-01

SEQUENCE CHART

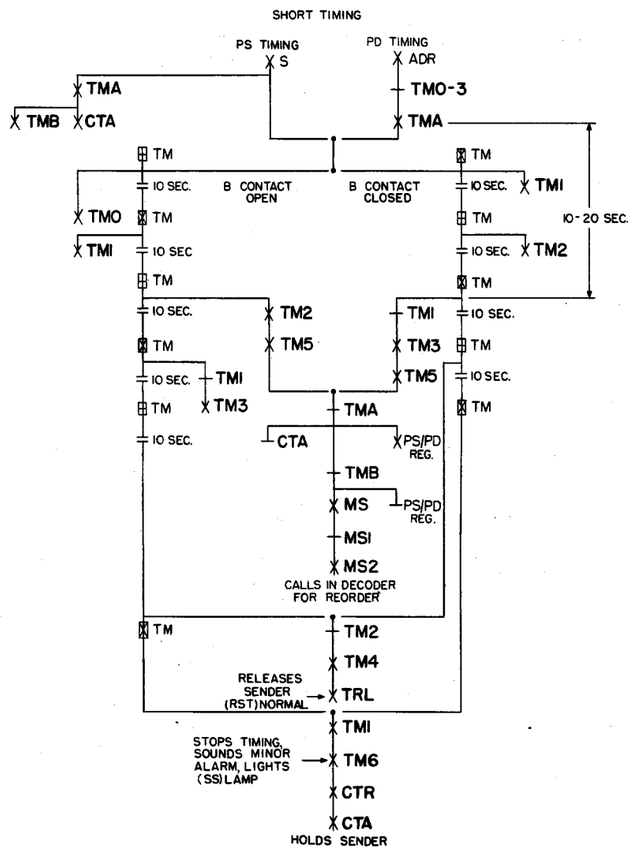

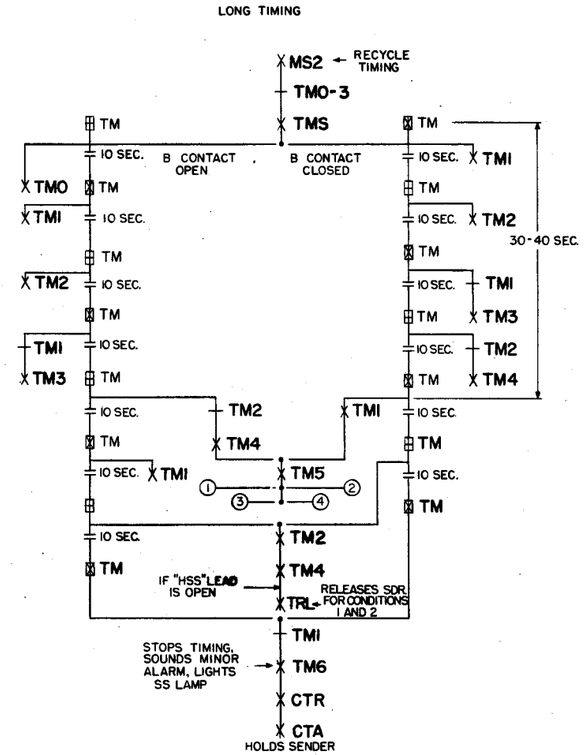

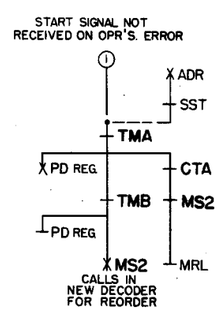

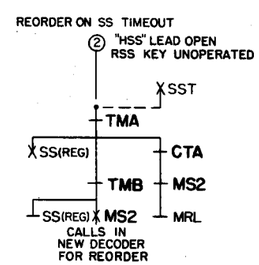

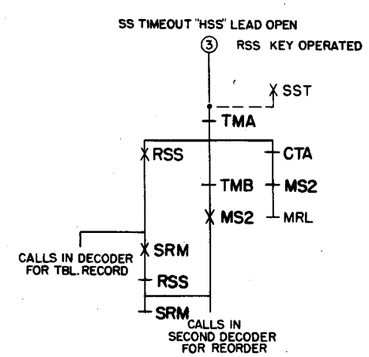

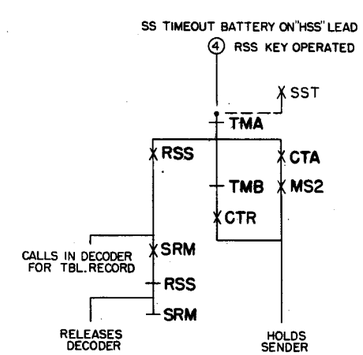

DECODER CKT.	SD-68340-01, ISS.5
DECODER CONN. CKT.	SD-68331-01, ISS.4
*INCOMING SENDER CKT.-DP	SD-68221-01, ISS.17
INTERRUPTER FRAME	SD-68058-01, ISS.15
MARKER CKT.	SD-68398-01, ISS.5
MARKER CONN. CKT.	SD-68395-01, ISS.5
MISC. CKT. FOR SENDER MAKE BUSY FRAME	SD-68386-01, ISS.15
MISC. CKT. FOR TROUBLE RECORDER	SD-68392-01, ISS.5
TRAFFIC REGISTER CKT.	SD-68412-01, ISS.7

DP INCOMING SENDER
OVER-ALL TIMING HOLDING AND RECORDING OF STUCK SENDERS FIG.22

OS 132-2 2 SHEETS, SHEET 1

NO. 4A TOLL

ORDER AS BSP ITEM MP-11796

ISSUE	1	G.R.K. & A.C.
DATE	10-20-53	

2 SHEETS, SHEET 1

MP-11796

BELL TELEPHONE LABORATORIES, INC

PRINTED IN U. S. A.

MP-11796

2 SHEETS, SHEET 2

ISSUE	DATE	
1	10-20-53	C.R.S. & E.E.C.

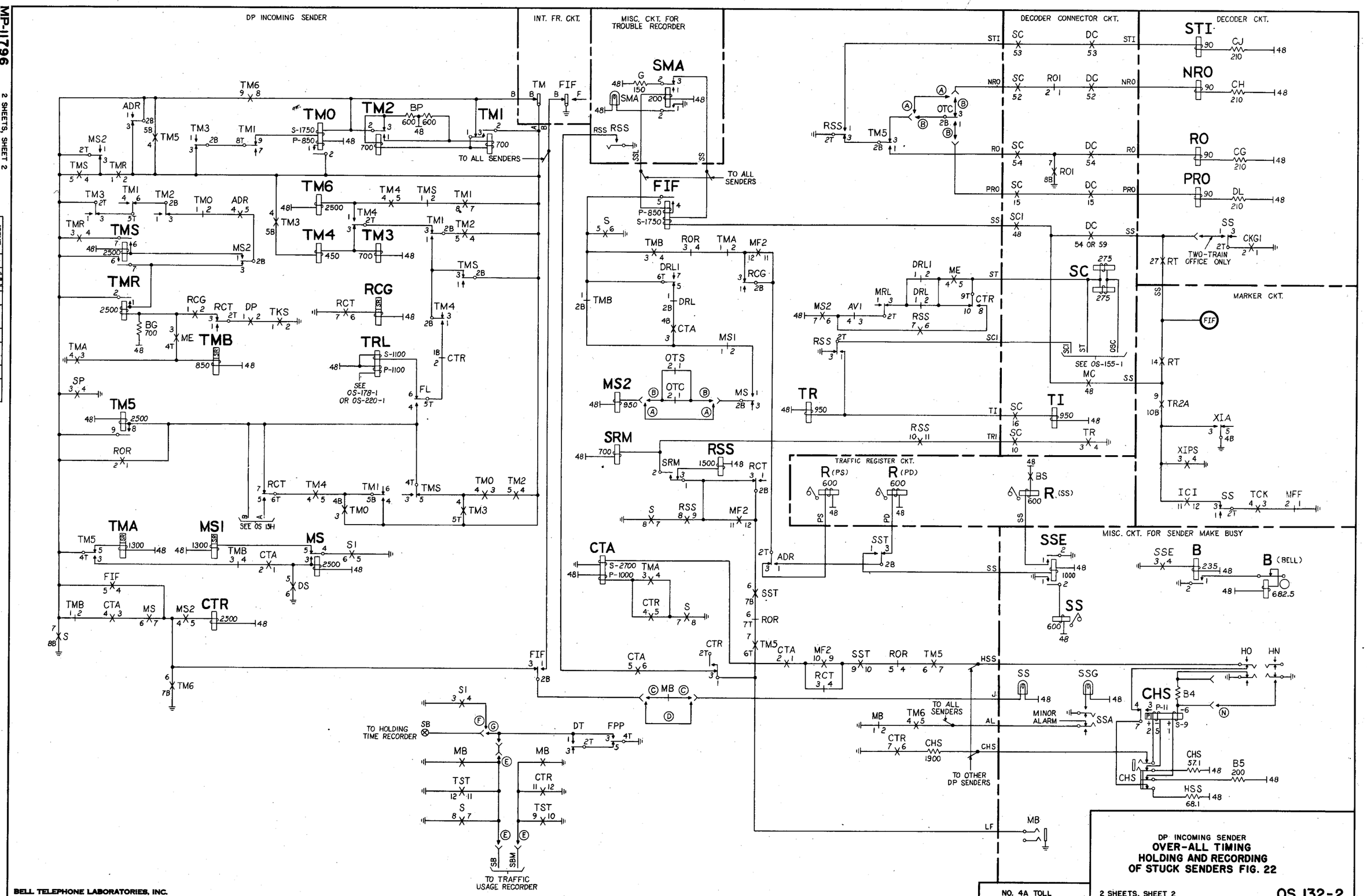

DP INCOMING SENDER
OVER-ALL TIMING HOLDING AND RECORDING OF STUCK SENDERS FIG. 22

2 SHEETS, SHEET 2

OS 132-2

BELL TELEPHONE LABORATORIES, INC.

PRINTED IN U. S. A.

ORDER AS BSP ITEM MP-11796

MP-11799

ISSUE	1	6 & 7	8 & 9
DATE	9-1-53		

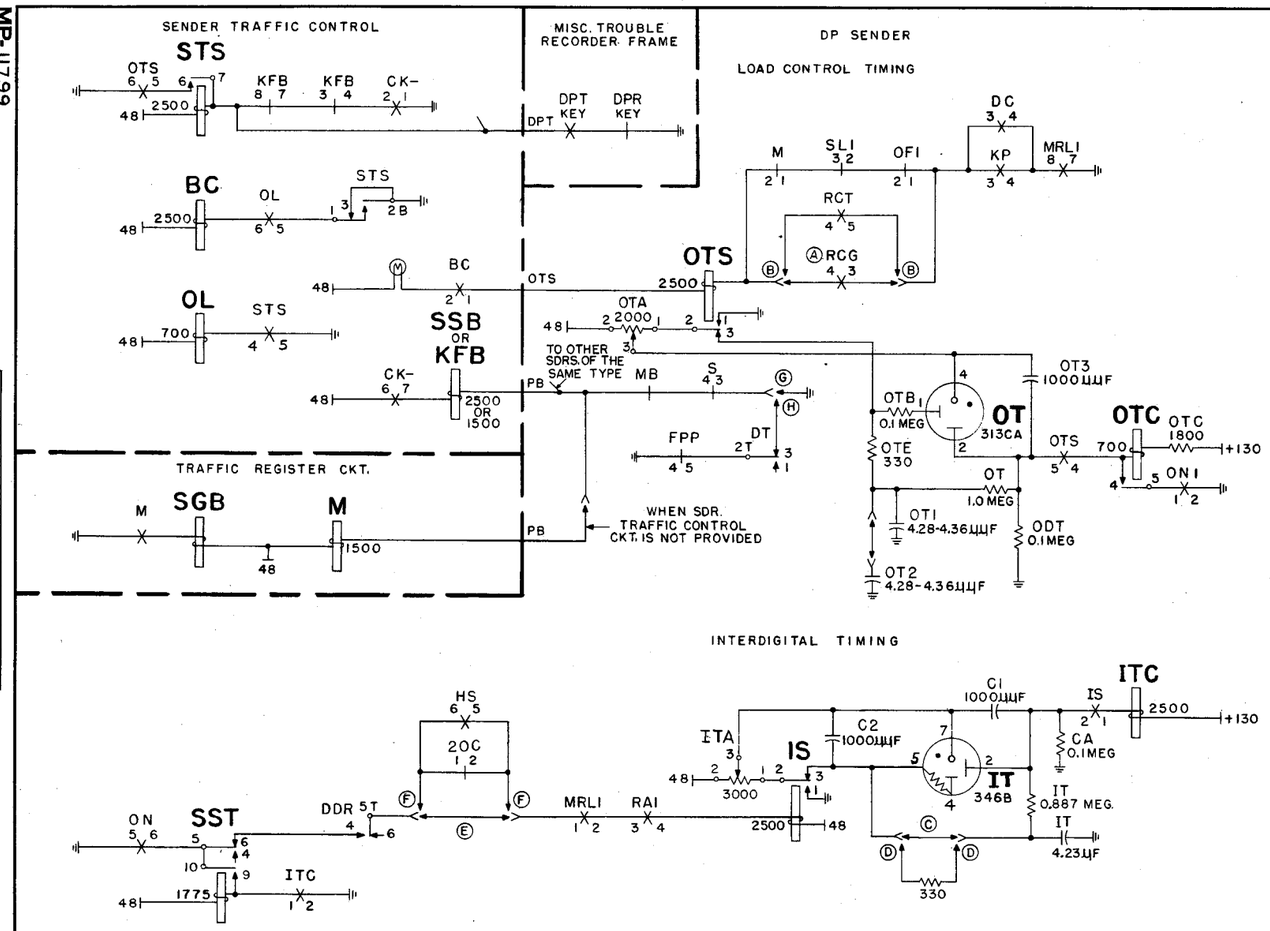

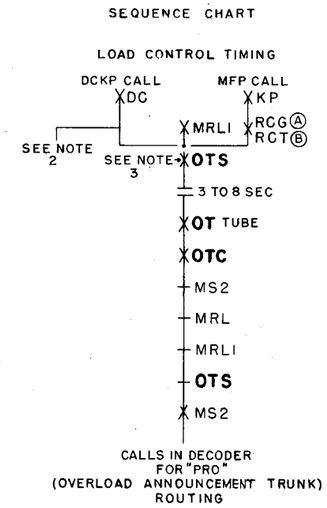

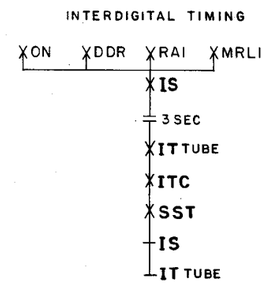

NOTES:

1.

OS OPTION	FEATURE OR OPTION	SD OPTION	SD
A	FIG. 4 PROVIDED		68221-01
B	FIG. 22 PROVIDED		
C	M.D.	Y U	
D	STD.	Y V	
E	LPD-20C CALLS DO NOT REQUIRE 7 DIGITS REGISTERED IN THE SENDER.	FIG. N	
F	LPD-20C CALLS REQUIRE 7 DIGITS REGISTERED IN THE SENDER.	FIG. O	
G	LOAD CONTROL TIMING NOT PROVIDED	FIG. L	
H	LOAD CONTROL TIMING PROVIDED	FIG. M	

2. THE LACK OF OUTGOING SENDER PREVENTS THE OPERATION OF SENDER (SL) & (SLI) RELAYS.

3. BATTERY CONNECTED TO (OTS) WINDING FROM SDR. TRAFFIC CONTROL CKT. WHEN A SHORTAGE OF SENDERS EXISTS IN A KEY FRAME GROUP.

INCOMING SENDER CKT. - DP SD-68221-01, ISS. 17
TRAFFIC REGISTER CKT. SD-68412-01, ISS. 7
SENDER TRAFFIC CONTROL CKT. SD-68455-01, ISS. 1

DP INCOMING SENDER
INTERDIGITAL TIMING AND INTERSENDER LOAD CONTROL TIMING

NO. 4A TOLL

OS-133-1

BELL TELEPHONE LABORATORIES, INC.
PRINTED IN U. S. A.

ORDER AS BSP ITEM MP-11799

MP-11721

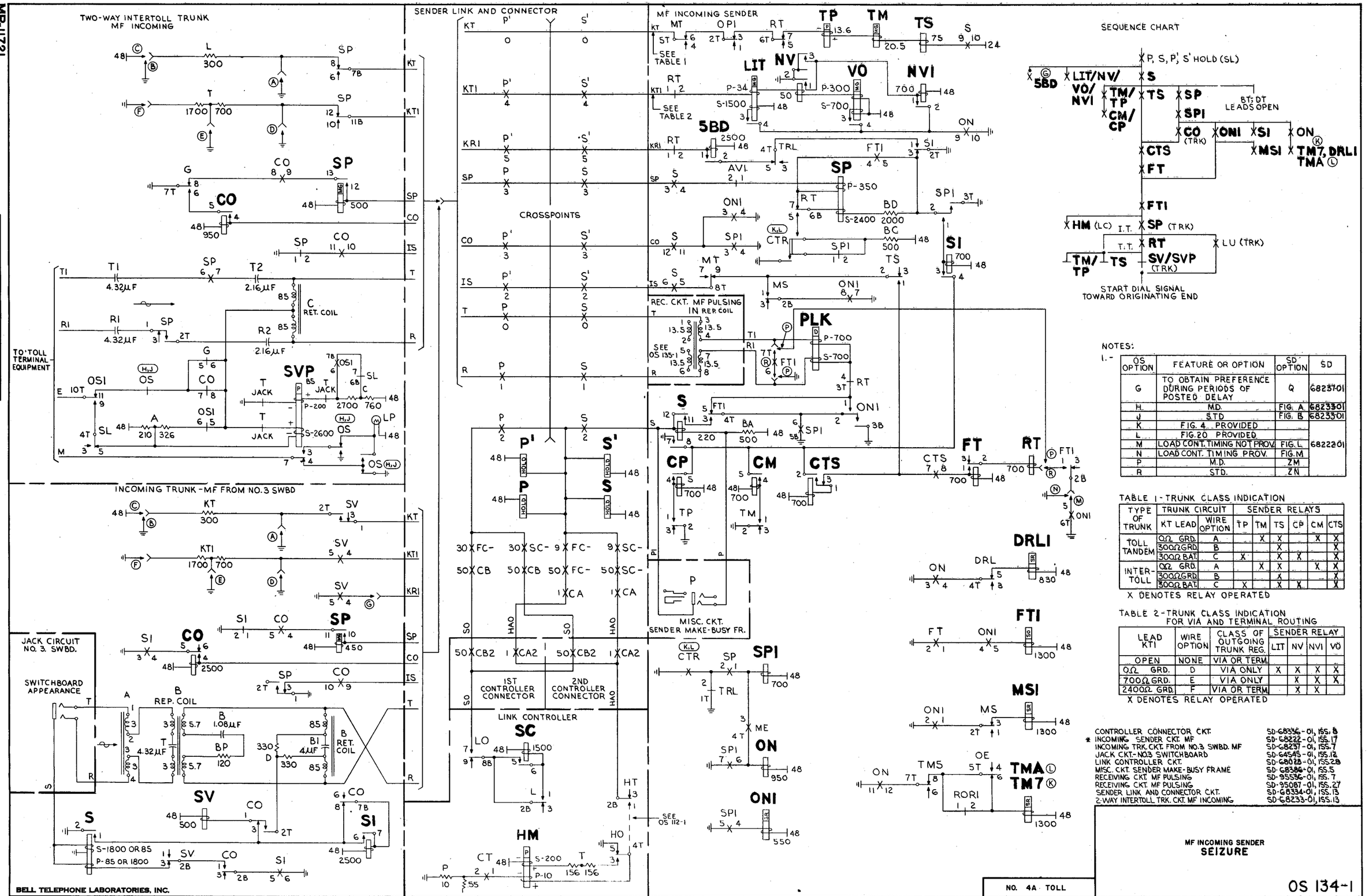

NOTES:

1.-

OS OPTION	FEATURE OR OPTION	SD OPTION	SD
G	TO OBTAIN PREFERENCE DURING PERIODS OF POSTED DELAY	Q	6823701
H	M.D.	FIG. A	6823301
J	STD	FIG. B	6823301
K	FIG. 4 PROVIDED		
L	FIG. 20 PROVIDED		
M	LOAD CONT. TIMING NOT PROV.	FIG. L	6822201
N	LOAD CONT. TIMING PROV.	FIG. M	
P	M.D.	ZM	
R	STD.	ZN	

TABLE 1 - TRUNK CLASS INDICATION

TYPE OF TRUNK	TRUNK CIRCUIT		SENDER RELAYS					
	KT LEAD	WIRE OPTION	TP	TM	TS	CP	CM	CTS
TOLL TANDEM	0Ω GRD.	A		X	X		X	X
	300Ω GRD.	B			X			X
	300Ω BAT.	C	X		X	X		X
INTER-TOLL	0Ω GRD.	A		X	X		X	X
	300Ω GRD.	B			X			X
	300Ω BAT.	C	X		X	X		X

X DENOTES RELAY OPERATED

TABLE 2 - TRUNK CLASS INDICATION FOR VIA AND TERMINAL ROUTING

LEAD KT1	WIRE OPTION	CLASS OF OUTGOING TRUNK REG.	SENDER RELAY			
			LIT	NV	NVI	VO
OPEN	NONE	VIA OR TERM.				
0Ω GRD.	D	VIA ONLY	X	X	X	X
700Ω GRD.	E	VIA ONLY		X	X	X
2400Ω GRD.	F	VIA OR TERM.		X	X	

X DENOTES RELAY OPERATED

	CONTROLLER CONNECTOR CKT.	SD-68336-01, ISS. 8
*	INCOMING SENDER CKT. MF	SD-68222-01, ISS. 17
	INCOMING TRK. CKT. FROM NO. 3 SWBD. MF	SD-68237-01, ISS. 7
	JACK CKT.-NO. 3 SWITCHBOARD	SD-64545-01, ISS. 12
	LINK CONTROLLER CKT.	SD-68028-01, ISS. 28
	MISC. CKT. SENDER MAKE-BUSY FRAME	SD-68386-01, ISS. 5
	RECEIVING CKT. MF PULSING	SD-95536-01, ISS. 7
	RECEIVING CKT. MF PULSING	SD-95087-01, ISS. 27
	SENDER LINK AND CONNECTOR CKT.	SD-68334-01, ISS. 13
	2-WAY INTERTOLL TRK. CKT. MF INCOMING	SD-68233-01, ISS. 13

ISSUE	DATE	
1	11-28-51	A.A.M.
2	8-14-53	G.E.E.

BELL TELEPHONE LABORATORIES, INC.
PRINTED IN U. S. A.

ORDER AS BSP ITEM MP-11721

RECEIVING CKT - MF PULSING

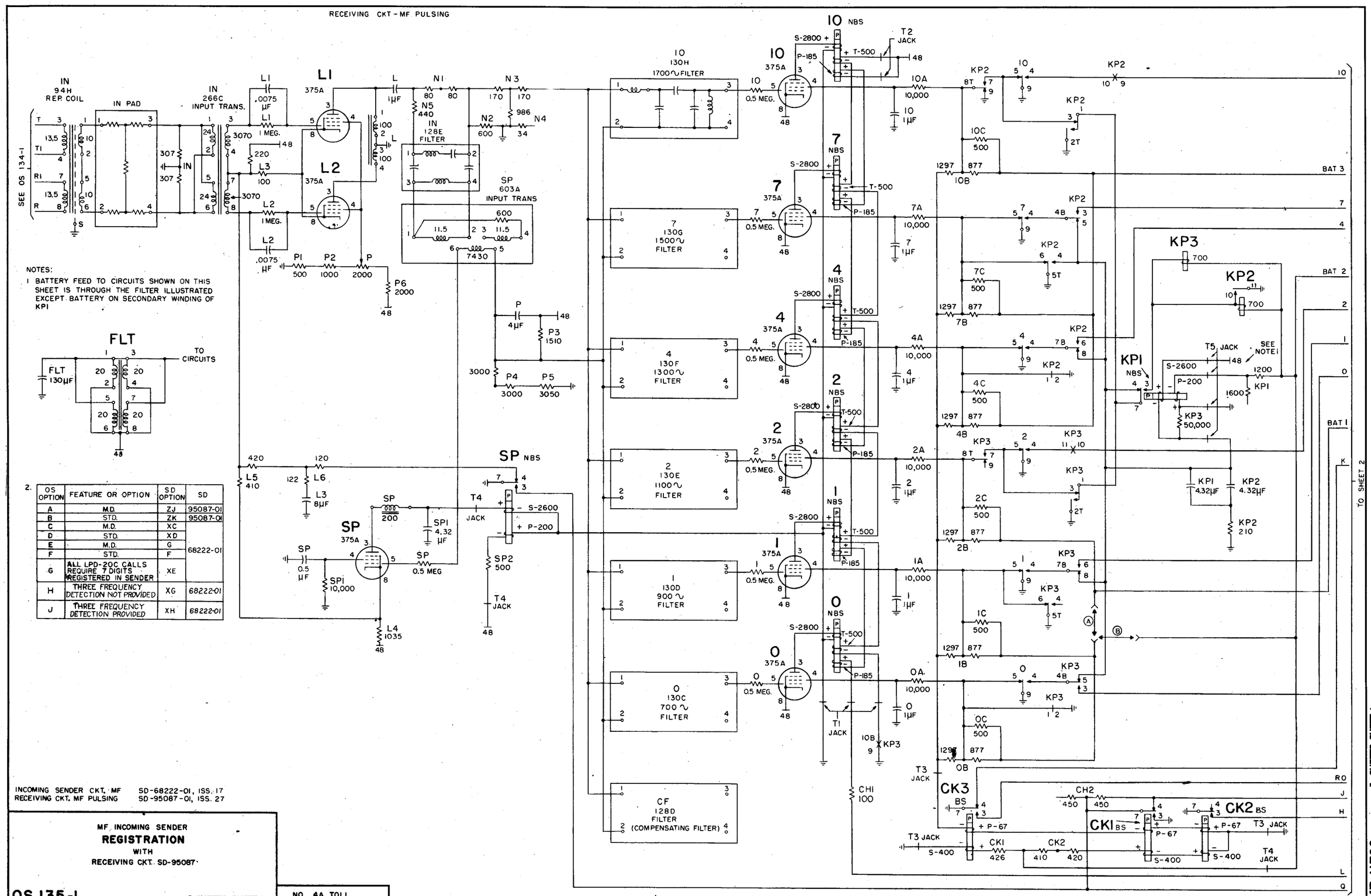

NOTES:

1 BATTERY FEED TO CIRCUITS SHOWN ON THIS SHEET IS THROUGH THE FILTER ILLUSTRATED EXCEPT BATTERY ON SECONDARY WINDING OF KP1

2.

OS OPTION	FEATURE OR OPTION	SD OPTION	SD
A	M.D.	ZJ	95087-01
B	STD.	ZK	95087-01
C	M.D.	XC	68222-01
D	STD.	XD	
E	M.D.	G	
F	STD.	F	
G	ALL LPD-20C CALLS REQUIRE 7 DIGITS REGISTERED IN SENDER	XE	
H	THREE FREQUENCY DETECTION NOT PROVIDED	XG	68222-01
J	THREE FREQUENCY DETECTION PROVIDED	XH	68222-01

INCOMING SENDER CKT. MF SD-68222-01, ISS. 17
RECEIVING CKT. MF PULSING SD-95087-01, ISS. 27

MF INCOMING SENDER
REGISTRATION
WITH
RECEIVING CKT. SD-95087

OS 135-1 3 SHEETS, SHEET 1

NO. 4A TOLL

ORDER AS BSP ITEM MP- 11722

BELL TELEPHONE LABORATORIES, INC.

PRINTED IN U. S. A.

ISSUE	1	2
DATE	11-26-51	8-18-53

3 SHEETS, SHEET 1

MP-11722

MP-11722

3 SHEETS, SHEET 2

ISSUE		
DATE		
11-26-51	1	G.R.F. J.E.H.
8-18-53	2	G.R.F. J.E.H.

TO SHEET 1

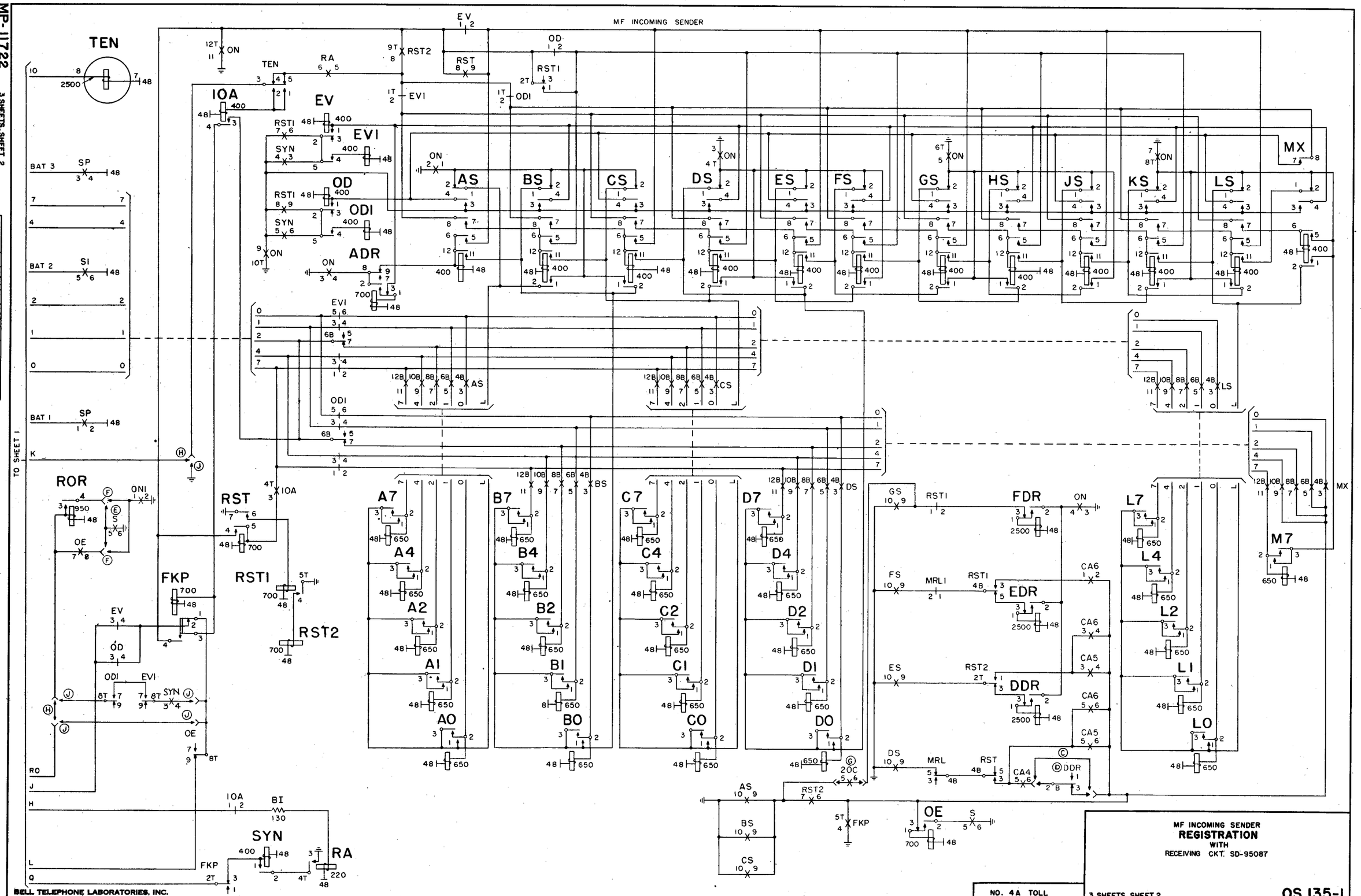

MF INCOMING SENDER
REGISTRATION
WITH
RECEIVING CKT. SD-95087

NO. 4A TOLL

3 SHEETS, SHEET 2

OS 135-1

BELL TELEPHONE LABORATORIES, INC.

PRINTED IN U. S. A.

ORDER AS BSP ITEM MP-11722

MP-11722

3 SHEETS, SHEET 3

ISSUE	DATE
1	11-26-51
2	8-18-53

SEQUENCE CHART

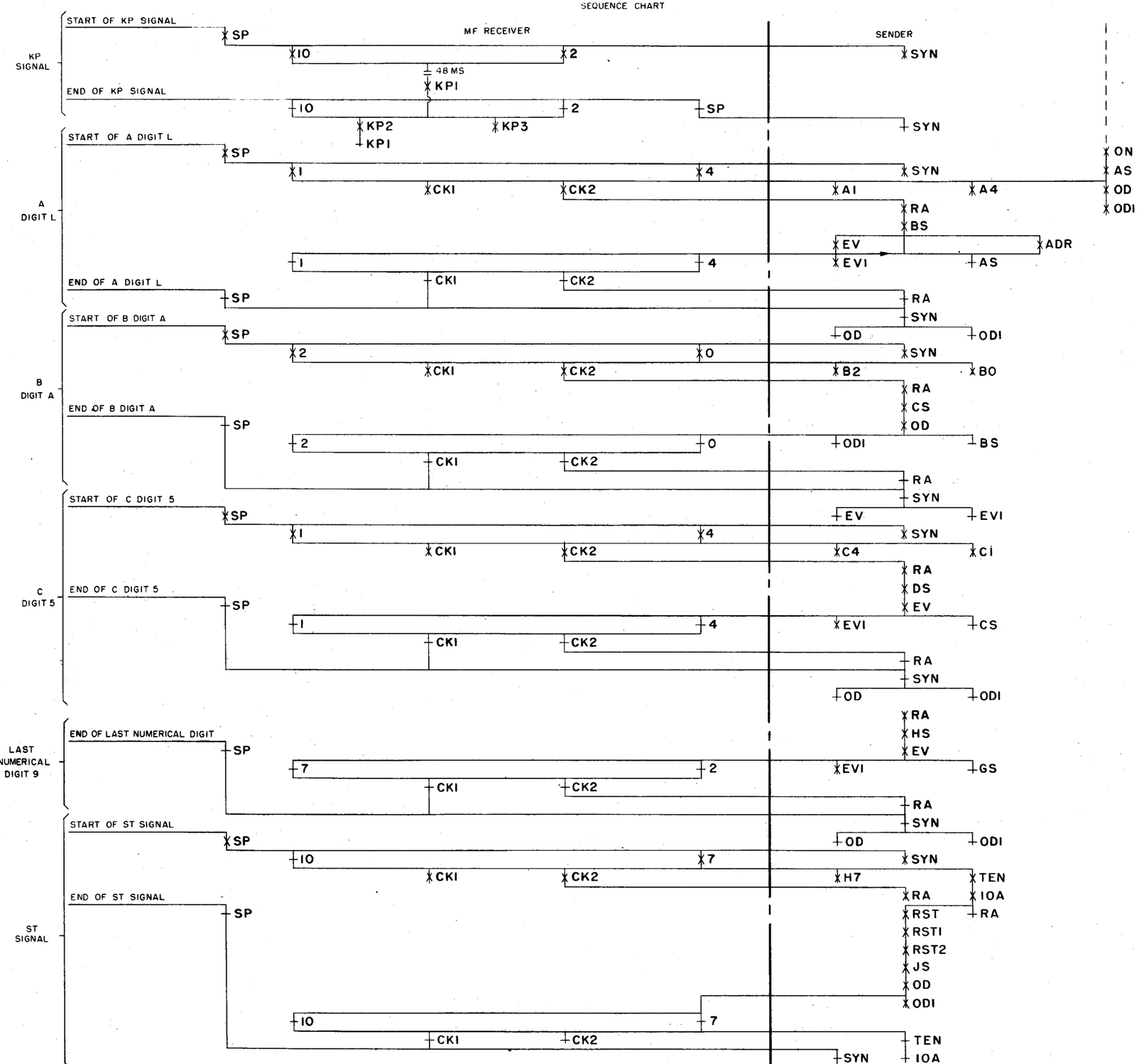

TABLE A
STEERING CIRCUIT PROGRESS

DIGIT	RA	EV	OD	AS	BS	CS	DS	ES	FS	GS	HS	JS	KS	LS	MX
KP			H+H	H+H											
A	O R	O H	H R	R	O H										
B	O R	R	O H		R	O H									
C	O R	O H	R			R	O H								
D	O R	R	O H				R	O H							
E	O R	O H	R					R	O H						
F	O R	R	O H						R	O H					
G	O R	O H	R							R	O H				
H	O R	R	O H								R	O H			
J	O R	O H	R									R	O H		
K	O R	R	O H										R	O H	
L	O R	O H	R											R	O H
START	O R	H H	O H												H H

O DENOTES RELAY OPERATED
H DENOTES RELAY HELD
R DENOTES RELAY RELEASE
+ DENOTES INITIALLY OPERATED AT SEIZURE FROM OFF-NORMAL GROUND

TABLE B

CODES	CHANNEL NO. & FREQUENCY					
	(0) 700~	(1) 900~	(2) 1100~	(4) 1300~	(7) 1500~	(10) 1700~
KP			X			X
1	X	X				
2	X		X			
3		X	X			
4	X			X		
5		X		X		
6			X	X		
7	X				X	
8		X			X	
9			X		X	
0				X	X	
ST					X	X

MF INCOMING SENDER
REGISTRATION
WITH
RECEIVING CKT. SD-95087

NO. 4A TOLL

3 SHEETS, SHEET 3

OS 135-1

BELL TELEPHONE LABORATORIES, INC.
PRINTED IN U. S. A.
ORDER AS BSP ITEM MP- 11722

MP-11722

3 SHEETS, SHEET 3

ISSUE	DATE
1	11-26-51
2	8-18-53

SEQUENCE CHART

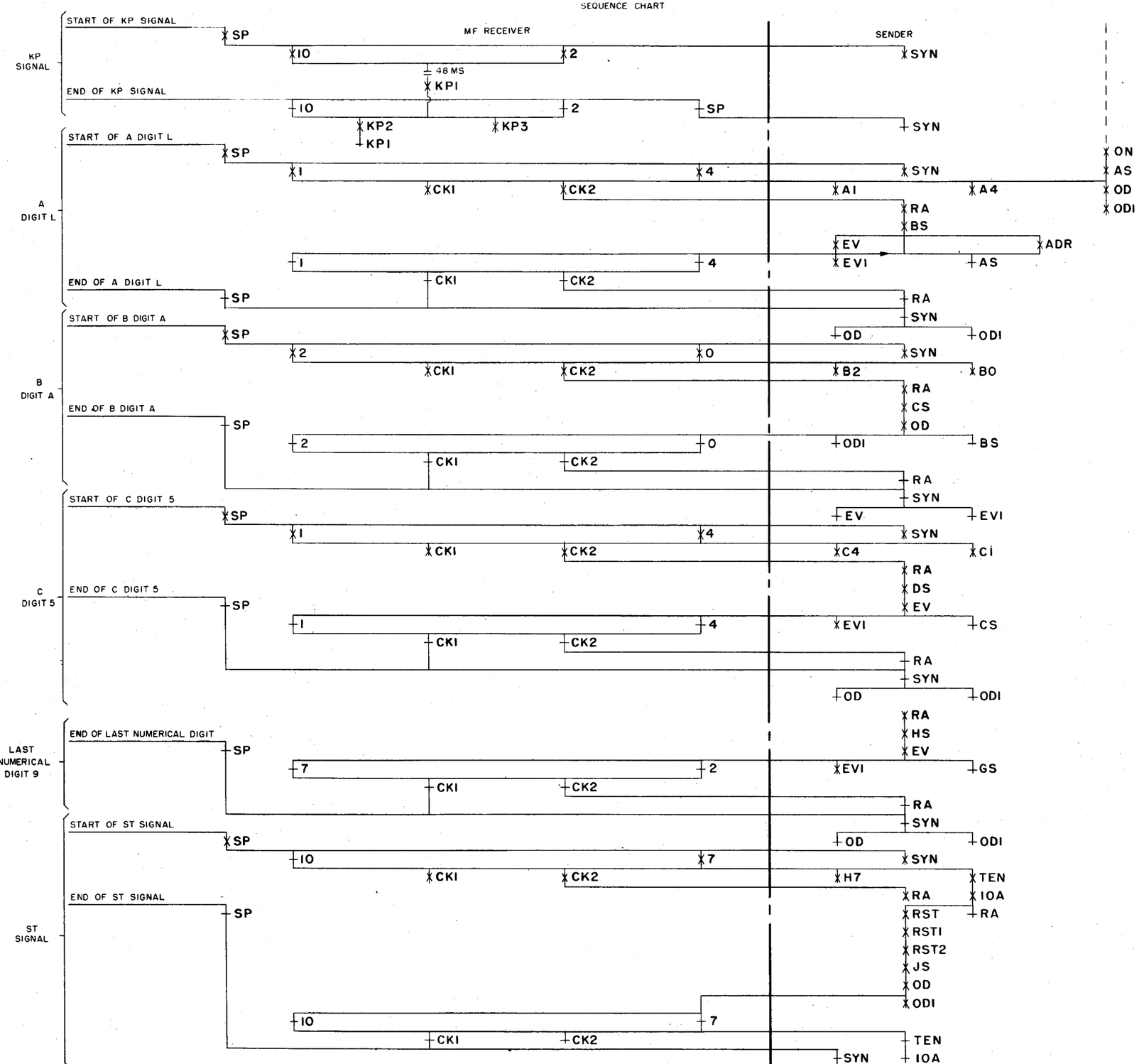

TABLE A
STEERING CIRCUIT PROGRESS

DIGIT	RA	EV	OD	AS	BS	CS	DS	ES	FS	GS	HS	JS	KS	LS	MX
KP			H+H	H+H											
A	O R	O H	H R	R	O H										
B	O R	R	O H		R	O H									
C	O R	O H	R			R	O H								
D	O R	R	O H				R	O H							
E	O R	O H	R					R	O H						
F	O R	R	O H						R	O H					
G	O R	O H	R							R	O H				
H	O R	R	O H								R	O H			
J	O R	O H	R									R	O H		
K	O R	R	O H										R	O H	
L	O R	O H	R											R	O H
START	O R	H H	O H												H H

O DENOTES RELAY OPERATED
H DENOTES RELAY HELD
R DENOTES RELAY RELEASE
+ DENOTES INITIALLY OPERATED AT SEIZURE FROM OFF-NORMAL GROUND

TABLE B

CODES	CHANNEL NO. & FREQUENCY					
	(0) 700~	(1) 900~	(2) 1100~	(4) 1300~	(7) 1500~	(10) 1700~
KP			X			X
1	X	X				
2	X		X			
3		X	X			
4	X			X		
5		X		X		
6			X	X		
7	X				X	
8		X			X	
9			X		X	
0				X	X	
ST					X	X

MF INCOMING SENDER
REGISTRATION
WITH
RECEIVING CKT. SD-95087

NO. 4A TOLL

3 SHEETS, SHEET 3

OS 135-1

BELL TELEPHONE LABORATORIES, INC.
PRINTED IN U. S. A.
ORDER AS BSP ITEM MP- 11722

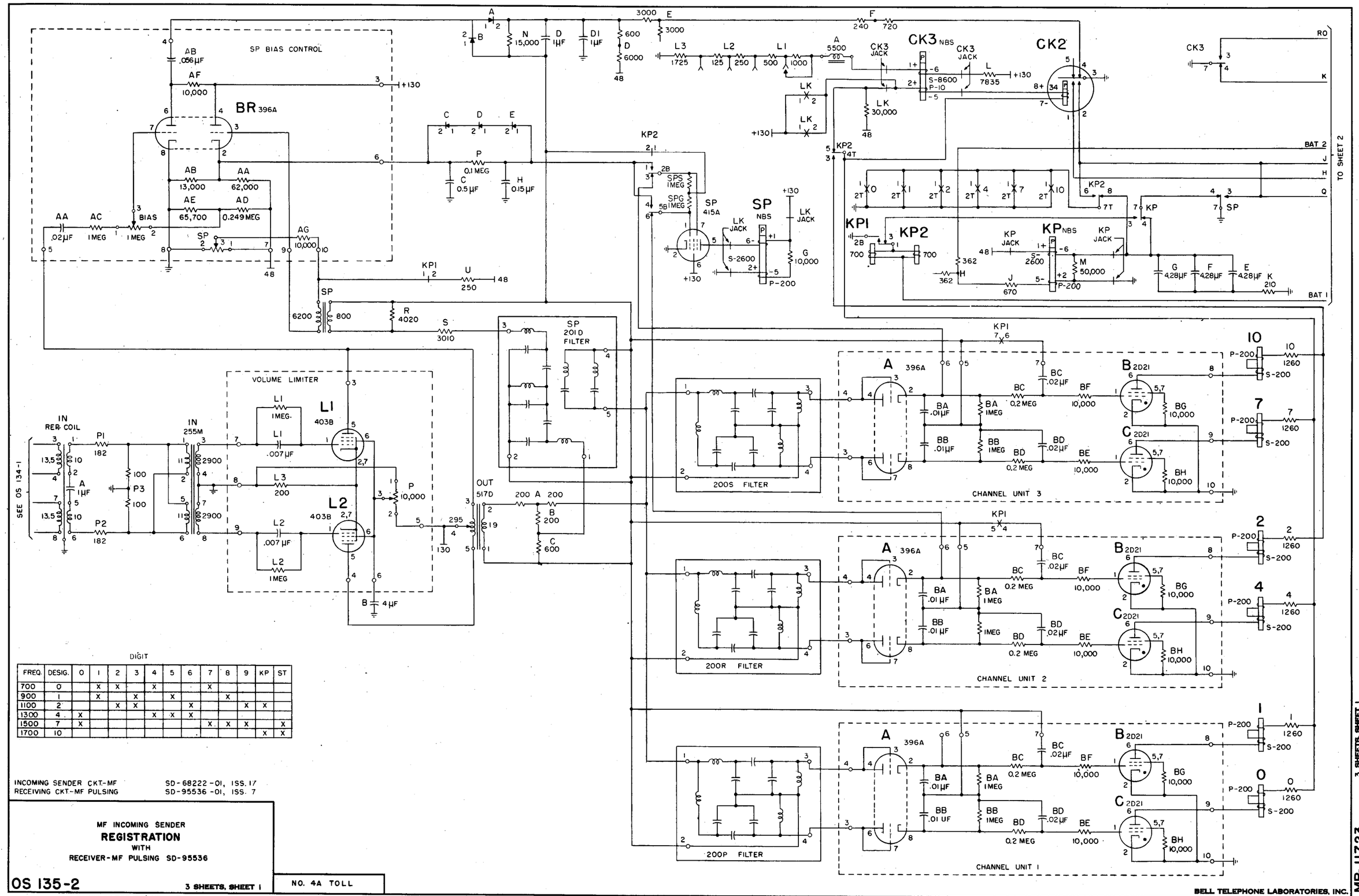

DIGIT

FREQ.	DESIG.	0	1	2	3	4	5	6	7	8	9	KP	ST
700	0		X	X		X			X				
900	1		X		X		X			X			
1100	2			X	X			X			X	X	
1300	4	X				X	X	X					
1500	7	X							X	X	X		X
1700	10											X	X

INCOMING SENDER CKT-MF — SD-68222-01, ISS. 17
RECEIVING CKT-MF PULSING — SD-95536-01, ISS. 7

MF INCOMING SENDER
REGISTRATION
WITH
RECEIVER-MF PULSING SD-95536

OS 135-2 — 3 SHEETS, SHEET 1 — NO. 4A TOLL

ORDER AS BSP ITEM MP-11723

ISSUE	1	A.S.M.	2	A.S.M.
DATE	11-28-51		9-1-53	

3 SHEETS, SHEET 1

MP-11723

BELL TELEPHONE LABORATORIES, INC.

PRINTED IN U. S. A.

MP-11723

3 SHEETS, SHEET 2

ISSUE	DATE	ISSUE	DATE
1	11-29-51	2	9-1-53

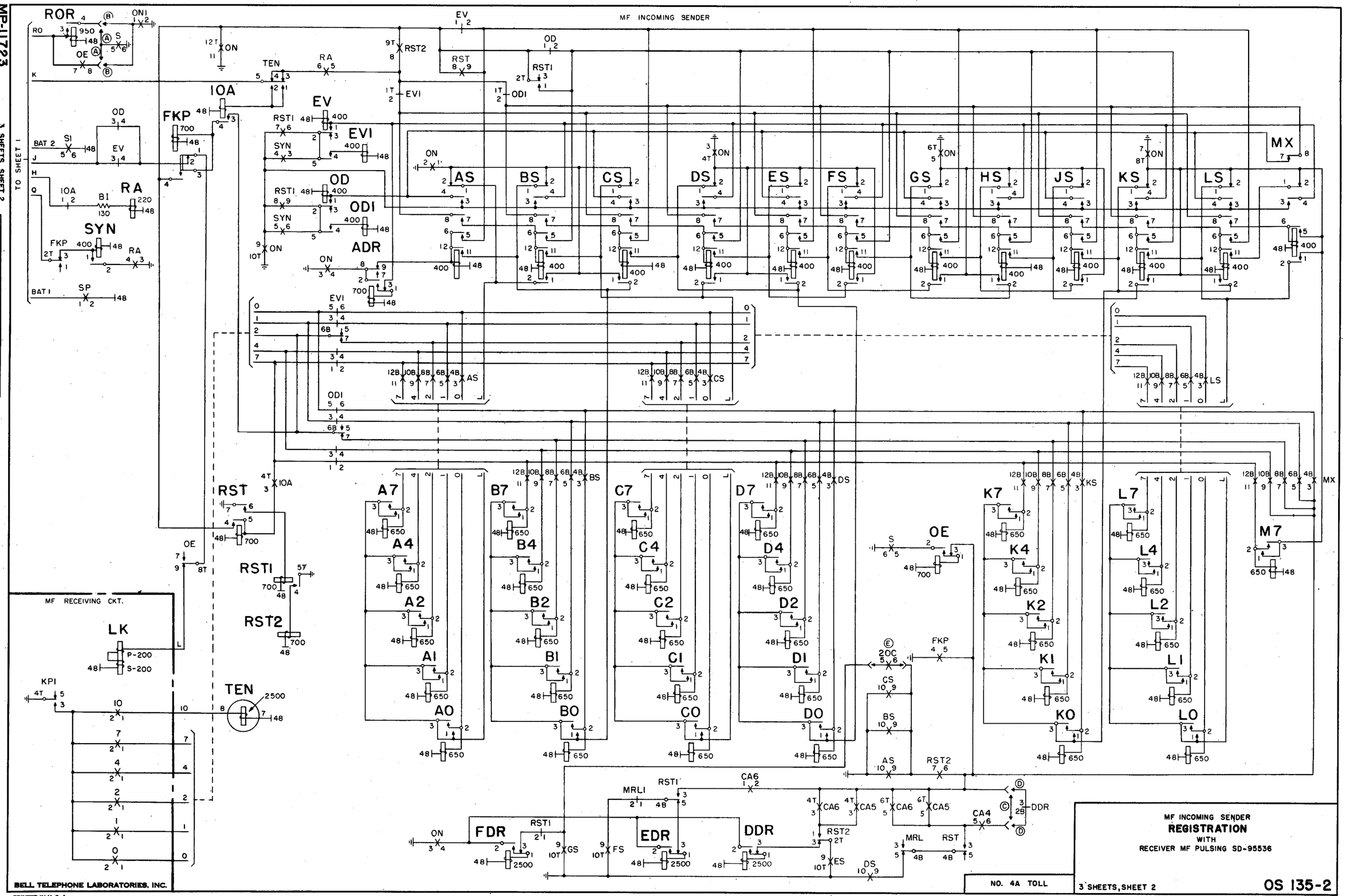

ISSUE	DATE
1 A.S.M. A.B.B.	11-28-51
2 G.R.B. R.E.C.	9-1-53

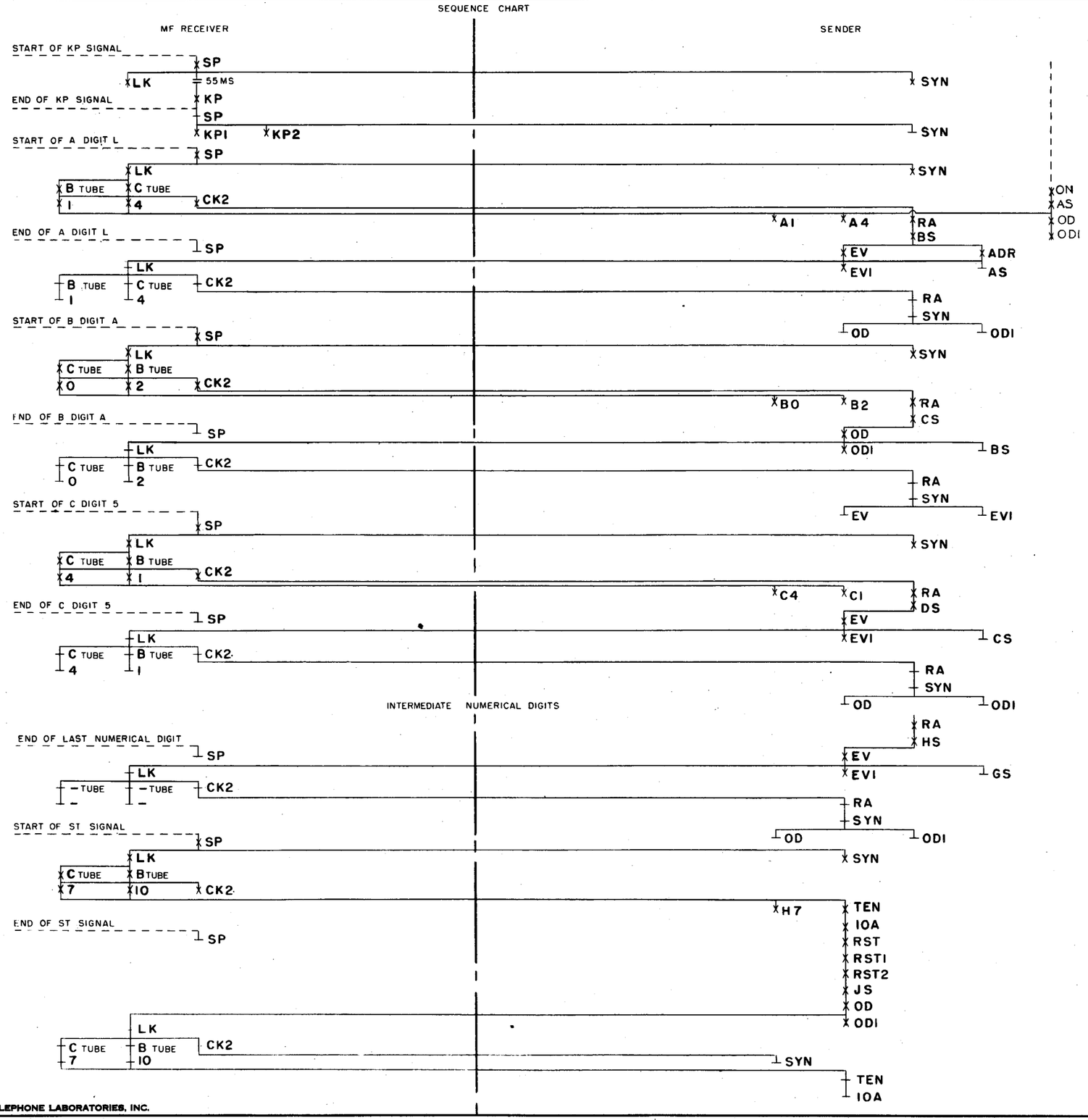

TABLE I
STEERING CIRCUIT PROGRESS

DIGIT	RA	EV	OD	AS	BS	CS	DS	ES	FS	GS	HS	JS	KS	LS	MX
KP			H+ H	H+ H											
A	O R	O H	R	R	O H										
B	O R	R	O H		R	O H									
C	O R	O H	R			R	O H								
D	O R	R	O H				R	O H							
E	O R	O H	R					R	O H						
F	O R	R	O H						R	O H					
G	O R	O H	R							R	O H				
H	O R	R	O H								R	O H			
J	O R	O H	R									R	O H		
K	O R	R	O H										R	O H	
L	O R	O H	R											R	O H
START	O R	H H	O H												H H

O DENOTES RELAY OPERATED.
H DENOTES RELAY HELD.
R DENOTES RELAY RELEASED.
+ DENOTES INITIALLY OPERATED AT SEIZURE FROM OFF-NORMAL GROUND.

SD OPTION	FEATURE OR OPTION	SD OPTION	SD
A	M.D.	G	68222-01
B	STD.	F	
C	M.D.	XC	
D	STD.	XD	
E	ALL LPD-20C CALLS REQUIRE 7 DIGITS REGISTERED IN THE SENDER	XE	

MF INCOMING SENDER
REGISTRATION
WITH
RECEIVER-MF PULSING SD-95536

NO. 4A TOLL

3 SHEETS, SHEET 3

OS 135-2

MP-11727

ISSUE		
DATE	1	2
11-26-51	1-5-54	6-22-63

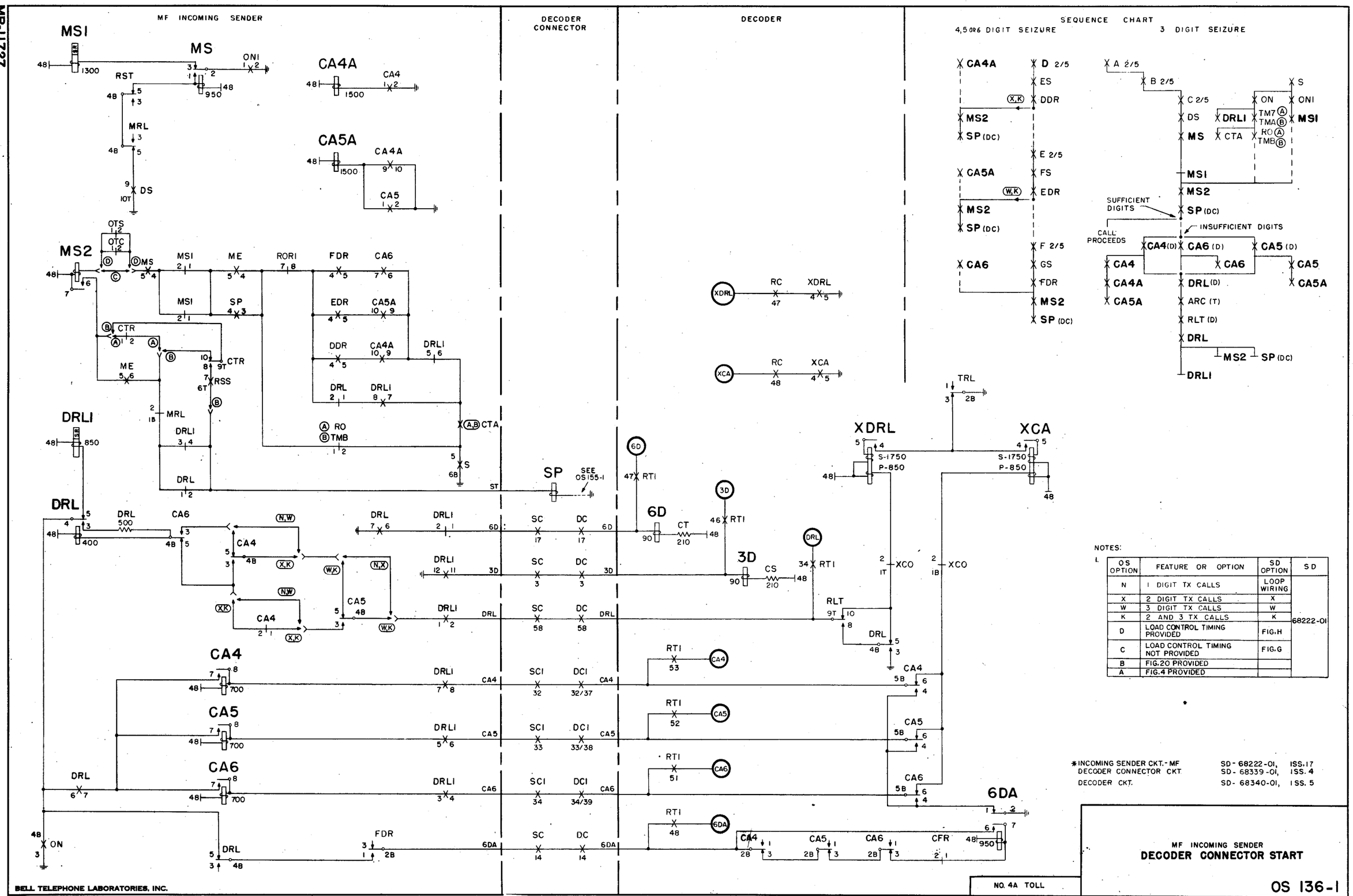

BELL TELEPHONE LABORATORIES, INC.

PRINTED IN U. S. A.

ORDER AS BSP ITEM MP-11727

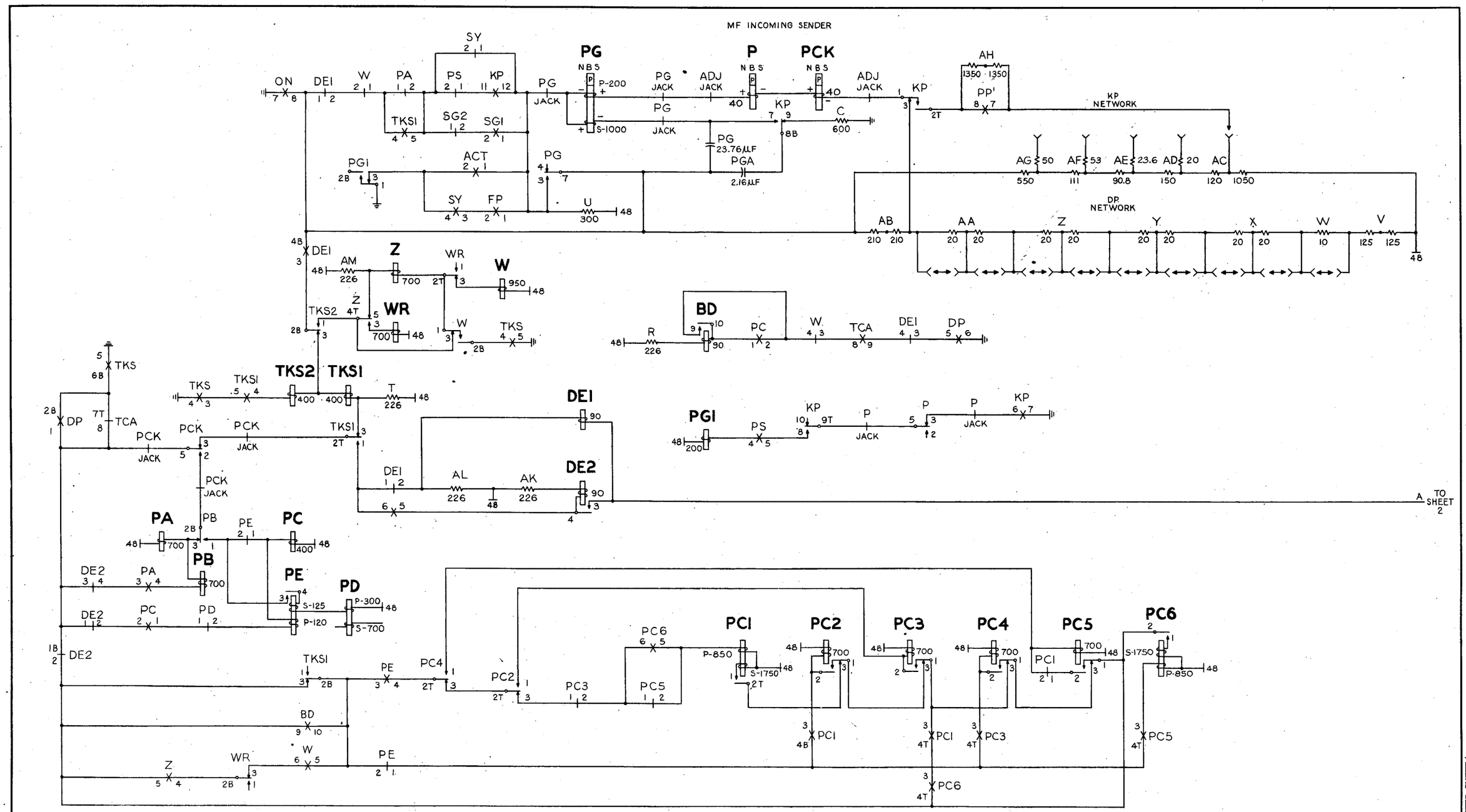

MF INCOMING SENDER

PULSE GENERATION AND RECAPTURE

OS 137-1

2 SHEETS, SHEET 1

NO. 4A TOLL

ORDER AS BSP ITEM MP-11728

ISSUE.	1	2
DATE	11-28-51	8-19-55

2 SHEETS, SHEET 1

MP-11728

BELL TELEPHONE LABORATORIES, INC.

PRINTED IN U. S. A.

MP-11728

2 SHEETS, SHEET 2

ISSUE	DATE	
1	11-28-51	M.A.V.G. F.B.B.
2	8-19-53	G.S.D. R.E.C.

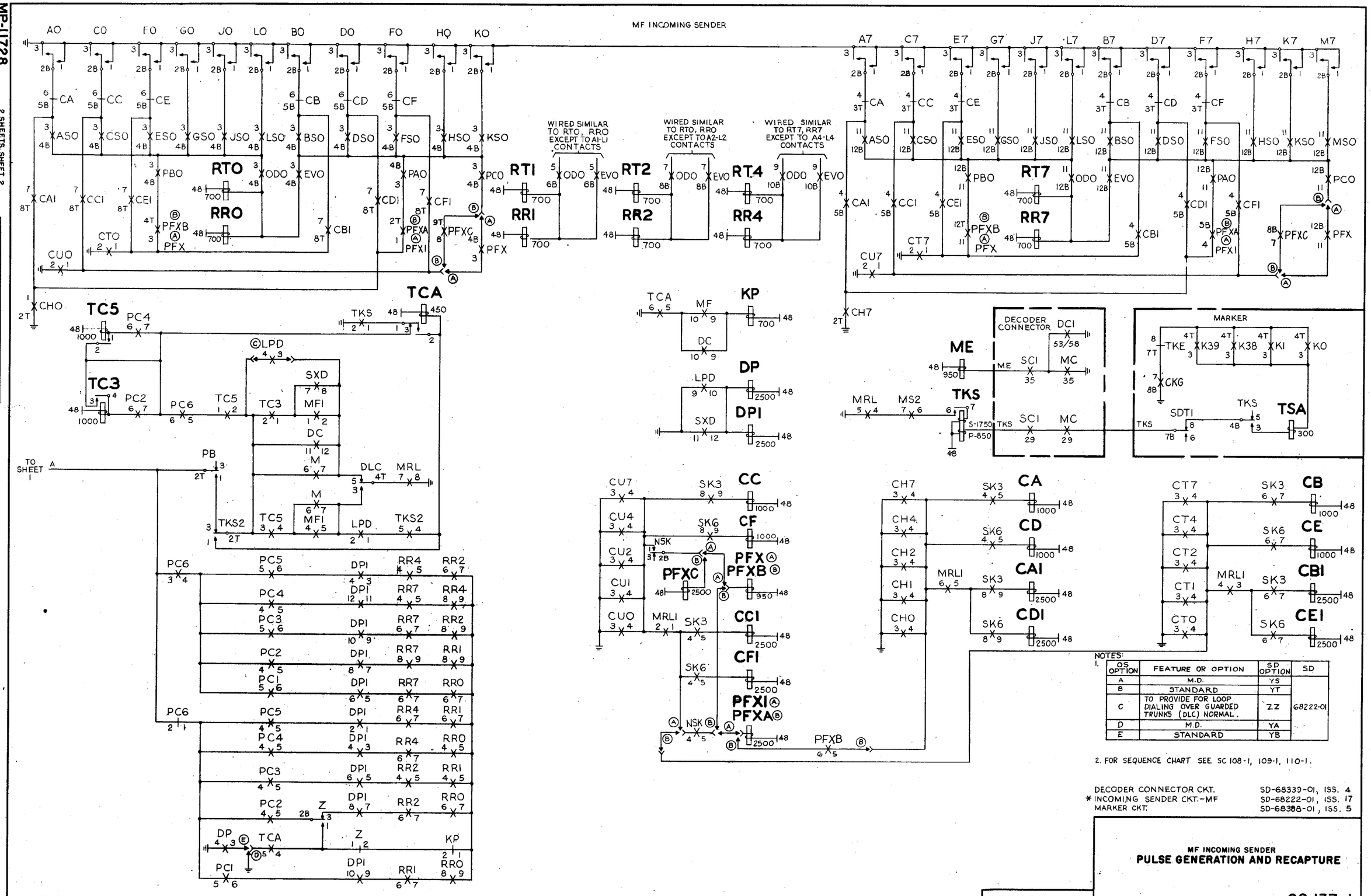

NOTES:

1.

OS OPTION	FEATURE OR OPTION	SD OPTION	SD
A	M.D.	YS	68222-01
B	STANDARD	YT	
C	TO PROVIDE FOR LOOP DIALING OVER GUARDED TRUNKS (DLC) NORMAL.	ZZ	
D	M.D.	YA	
E	STANDARD	YB	

2. FOR SEQUENCE CHART SEE SC 108-1, 109-1, 110-1.

DECODER CONNECTOR CKT. SD-68339-01, ISS. 4
* INCOMING SENDER CKT.-MF SD-68222-01, ISS. 17
MARKER CKT. SD-68388-01, ISS. 5

MF INCOMING SENDER
PULSE GENERATION AND RECAPTURE

NO. 4A TOLL

2 SHEETS, SHEET 2

OS 137-1

BELL TELEPHONE LABORATORIES, INC.
PRINTED IN U. S. A.
ORDER AS BSP ITEM MP-11728

MP-11715

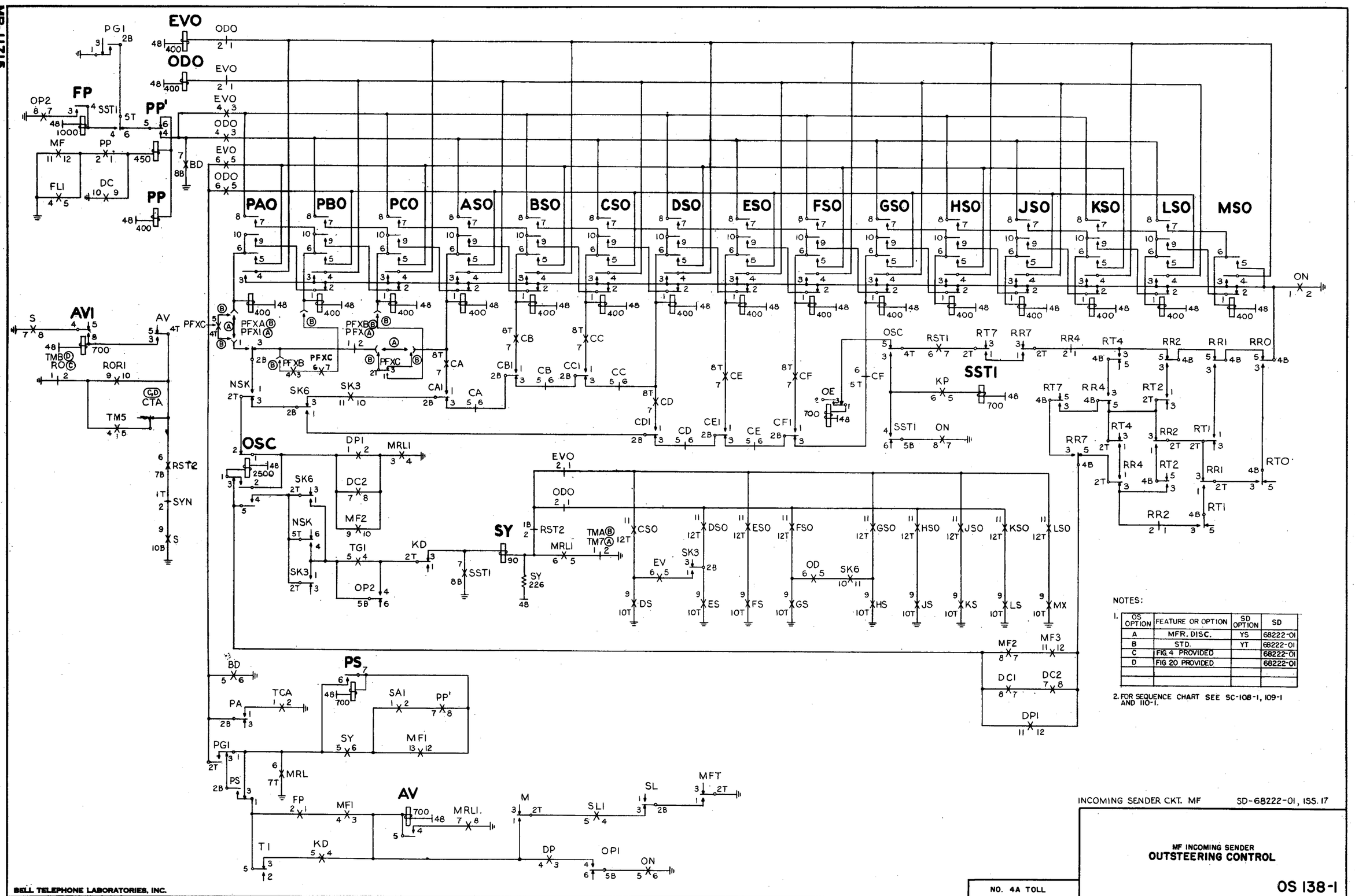

NOTES:

1.

OS OPTION	FEATURE OR OPTION	SD OPTION	SD
A	MFR. DISC.	YS	68222-01
B	STD.	YT	68222-01
C	FIG. 4 PROVIDED		68222-01
D	FIG 20 PROVIDED		68222-01

2. FOR SEQUENCE CHART SEE SC-108-1, 109-1 AND 110-1.

INCOMING SENDER CKT. MF SD-68222-01, ISS. 17

MF INCOMING SENDER
OUTSTEERING CONTROL

NO. 4A TOLL

OS 138-1

BELL TELEPHONE LABORATORIES, INC.
PRINTED IN U. S. A.
ORDER AS BSP ITEM MP-11715

MF INCOMING SENDER

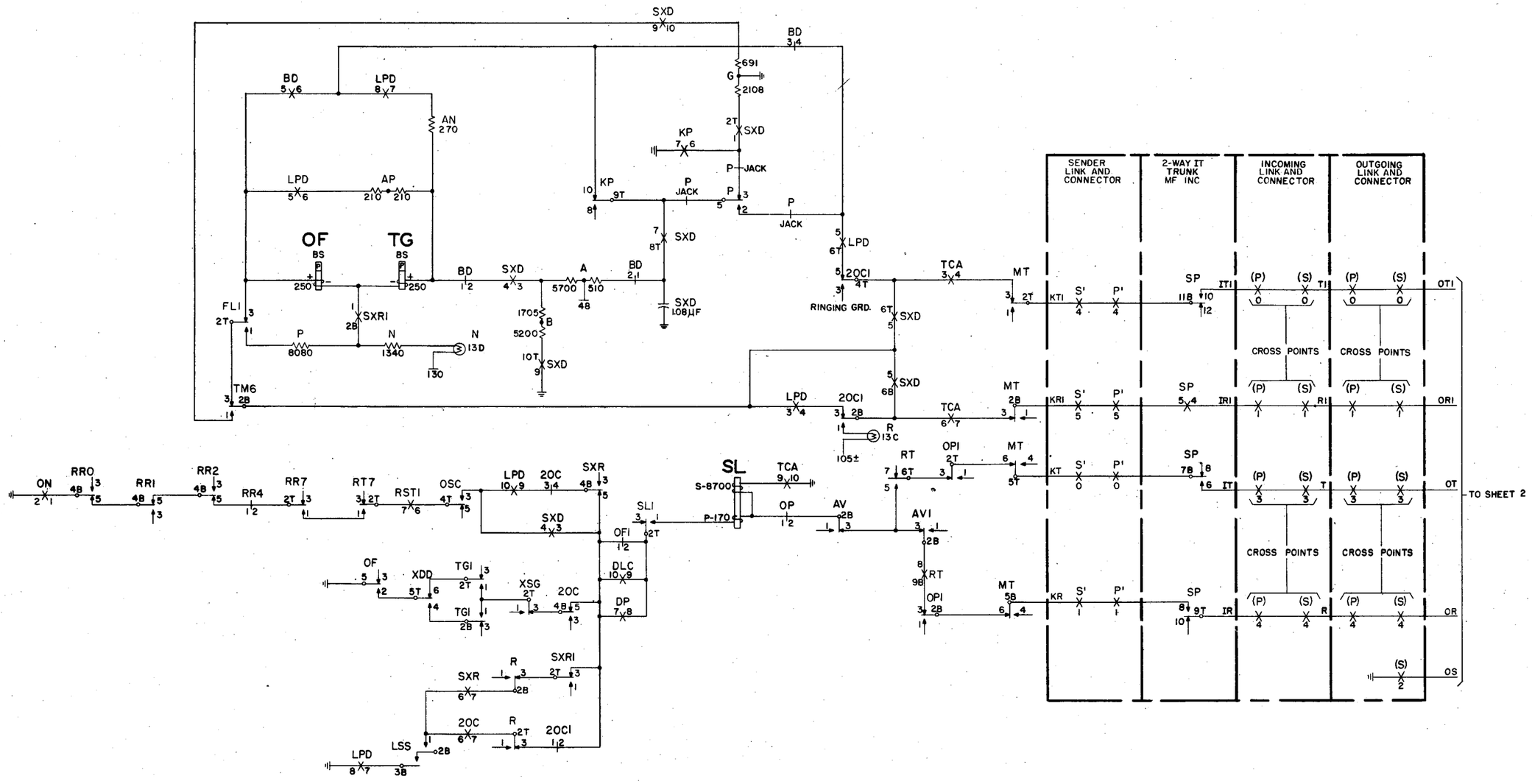

MF INCOMING SENDER
SL CHECK & SX AND LOOP OUTPULSING

OS 139-1 — 2 SHEETS, SHEET 1 — NO 4A TOLL

ORDER AS BSP ITEM MP-11729

ISSUE	DATE
1	11-19-57
2	8-13-63

2 SHEETS, SHEET 1

MP-11729

BELL TELEPHONE LABORATORIES, INC.

PRINTED IN U. S. A.

MP-11729 2 SHEETS, SHEET 2

DATE	ISSUE	
11-19-51	1	[illegible]
8-13-53	2	[illegible]

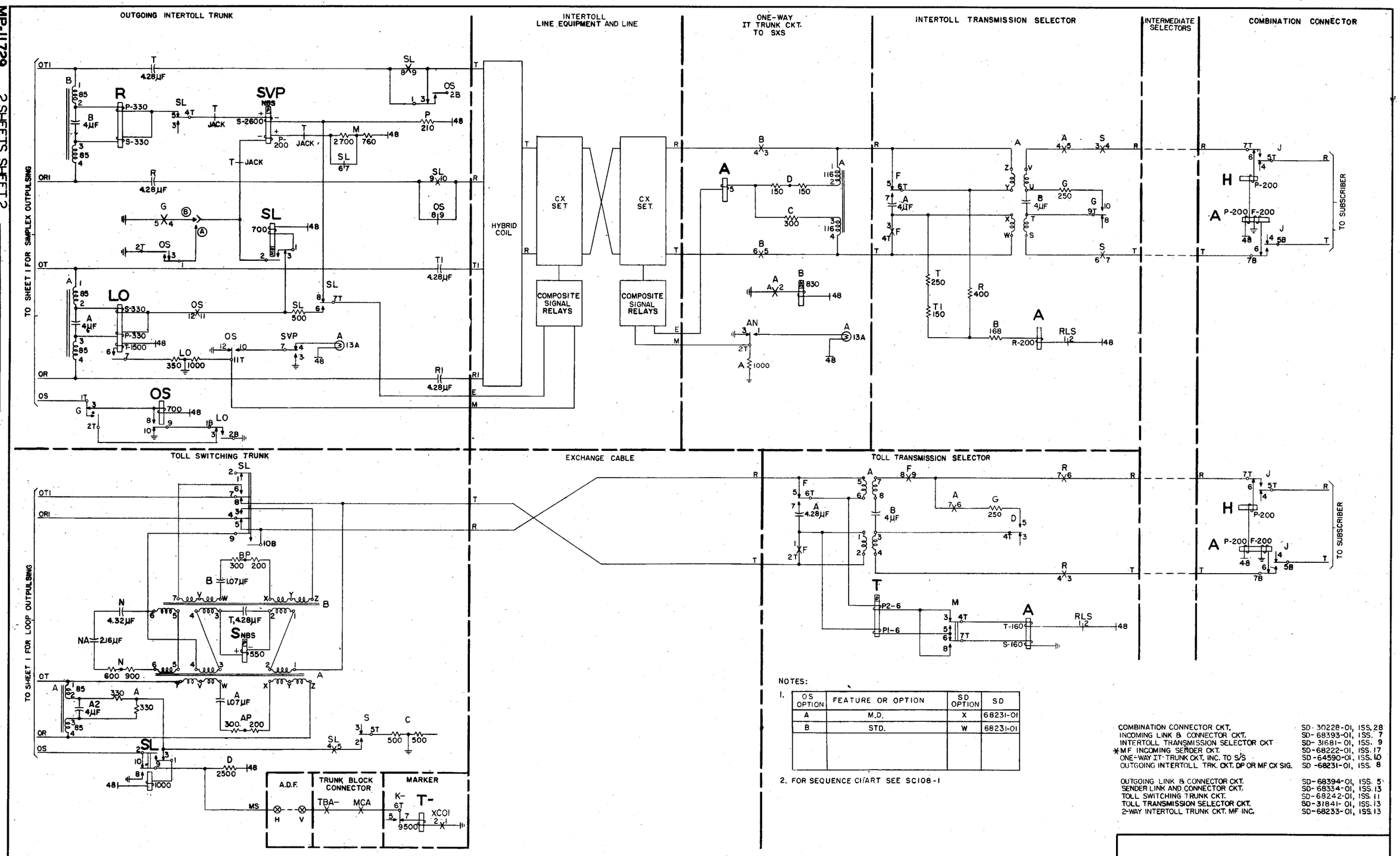

NOTES:

1.

OS OPTION	FEATURE OR OPTION	SD OPTION	SD
A	M.D.	X	68231-01
B	STD.	W	68231-01

2. FOR SEQUENCE CHART SEE SC108-1

COMBINATION CONNECTOR CKT.	SD-30228-01, ISS. 28
INCOMING LINK & CONNECTOR CKT.	SD-68393-01, ISS. 7
INTERTOLL TRANSMISSION SELECTOR CKT	SD-31681-01, ISS. 9
*MF INCOMING SENDER CKT.	SD-68222-01, ISS. 17
ONE-WAY IT-TRUNK CKT. INC. TO S/S	SD-64590-01, ISS. 10
OUTGOING INTERTOLL TRK. CKT. DP OR MF CX SIG.	SD-68231-01, ISS. 8
OUTGOING LINK & CONNECTOR CKT.	SD-68394-01, ISS. 5
SENDER LINK AND CONNECTOR CKT.	SD-68334-01, ISS. 13
TOLL SWITCHING TRUNK CKT.	SD-68242-01, ISS. 11
TOLL TRANSMISSION SELECTOR CKT.	SD-31841-01, ISS. 13
2-WAY INTERTOLL TRUNK CKT. MF INC.	SD-68233-01, ISS. 13

MF INCOMING SENDER

SL CHECK & SX AND LOOP OUTPULSING

NO. 4A TOLL

2 SHEETS, SHEET 2

OS 139-1

BELL TELEPHONE LABORATORIES, INC.
PRINTED IN U. S. A.
ORDER AS BSP ITEM MP-11729

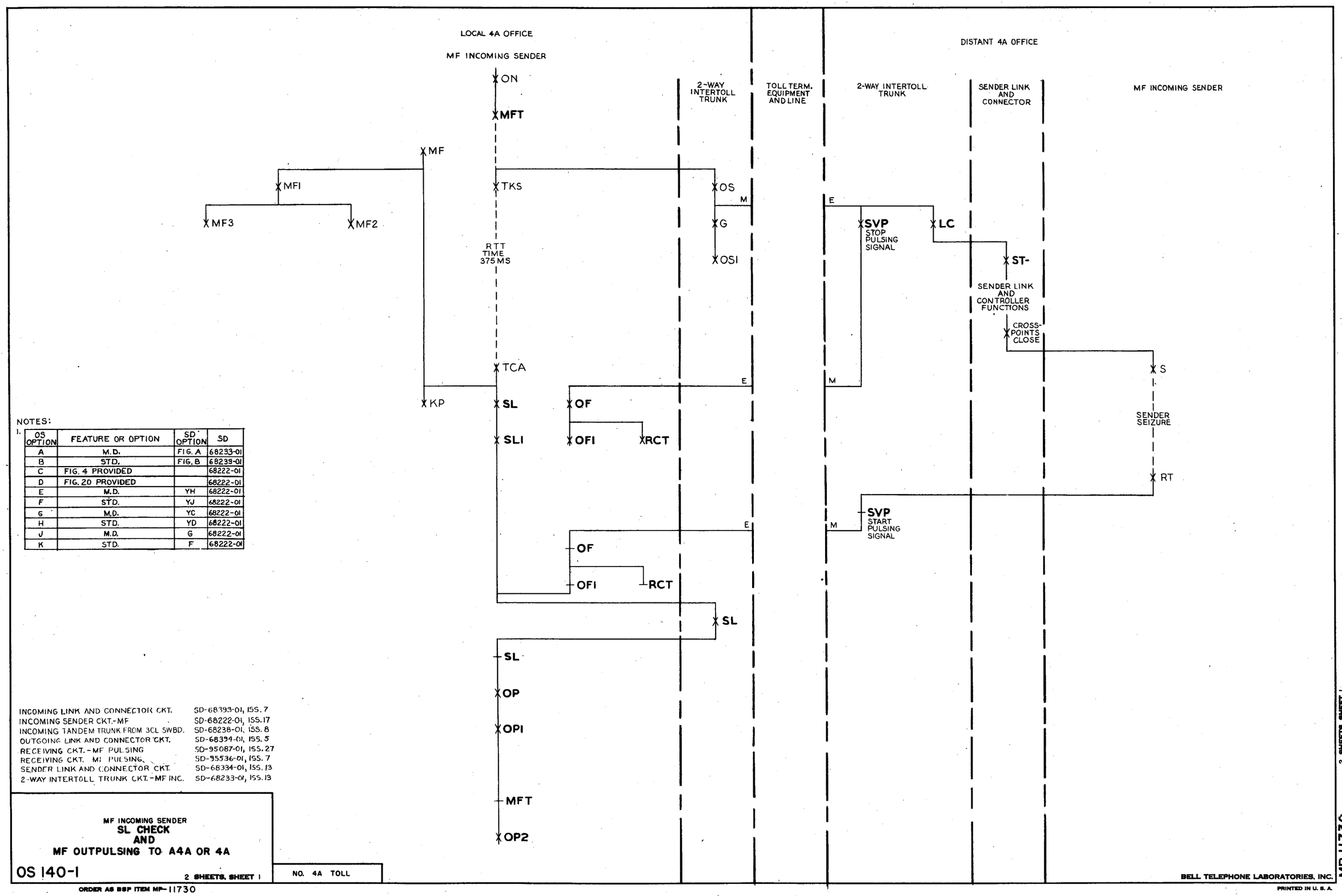

NOTES:

1.

OS OPTION	FEATURE OR OPTION	SD OPTION	SD
A	M.D.	FIG. A	68233-01
B	STD.	FIG. B	68233-01
C	FIG. 4 PROVIDED		68222-01
D	FIG. 20 PROVIDED		68222-01
E	M.D.	YH	68222-01
F	STD.	YJ	68222-01
G	M.D.	YC	68222-01
H	STD.	YD	68222-01
J	M.D.	G	68222-01
K	STD.	F	68222-01

INCOMING LINK AND CONNECTOR CKT.	SD-68393-01, ISS. 7
INCOMING SENDER CKT.-MF	SD-68222-01, ISS. 17
INCOMING TANDEM TRUNK FROM 3CL SWBD.	SD-68238-01, ISS. 8
OUTGOING LINK AND CONNECTOR CKT.	SD-68394-01, ISS. 5
RECEIVING CKT.-MF PULSING	SD-95087-01, ISS. 27
RECEIVING CKT. MF PULSING	SD-95536-01, ISS. 7
SENDER LINK AND CONNECTOR CKT.	SD-68334-01, ISS. 13
2-WAY INTERTOLL TRUNK CKT.-MF INC.	SD-68233-01, ISS. 13

MF INCOMING SENDER
SL CHECK AND MF OUTPULSING TO A4A OR 4A

OS 140-1

2 SHEETS, SHEET 1

NO. 4A TOLL

ORDER AS BSP ITEM MP-11730

ISSUE	1	W.A.K. W.B.B.	2	G.E.C. R.E.C.
DATE	11-26-51		8-18-53	

2 SHEETS, SHEET 1

MP-11730

BELL TELEPHONE LABORATORIES, INC.

PRINTED IN U. S. A.

MP-11730

2 SHEETS, SHEET 2

ISSUE	DATE
1	11-28-51
2	8-18-53

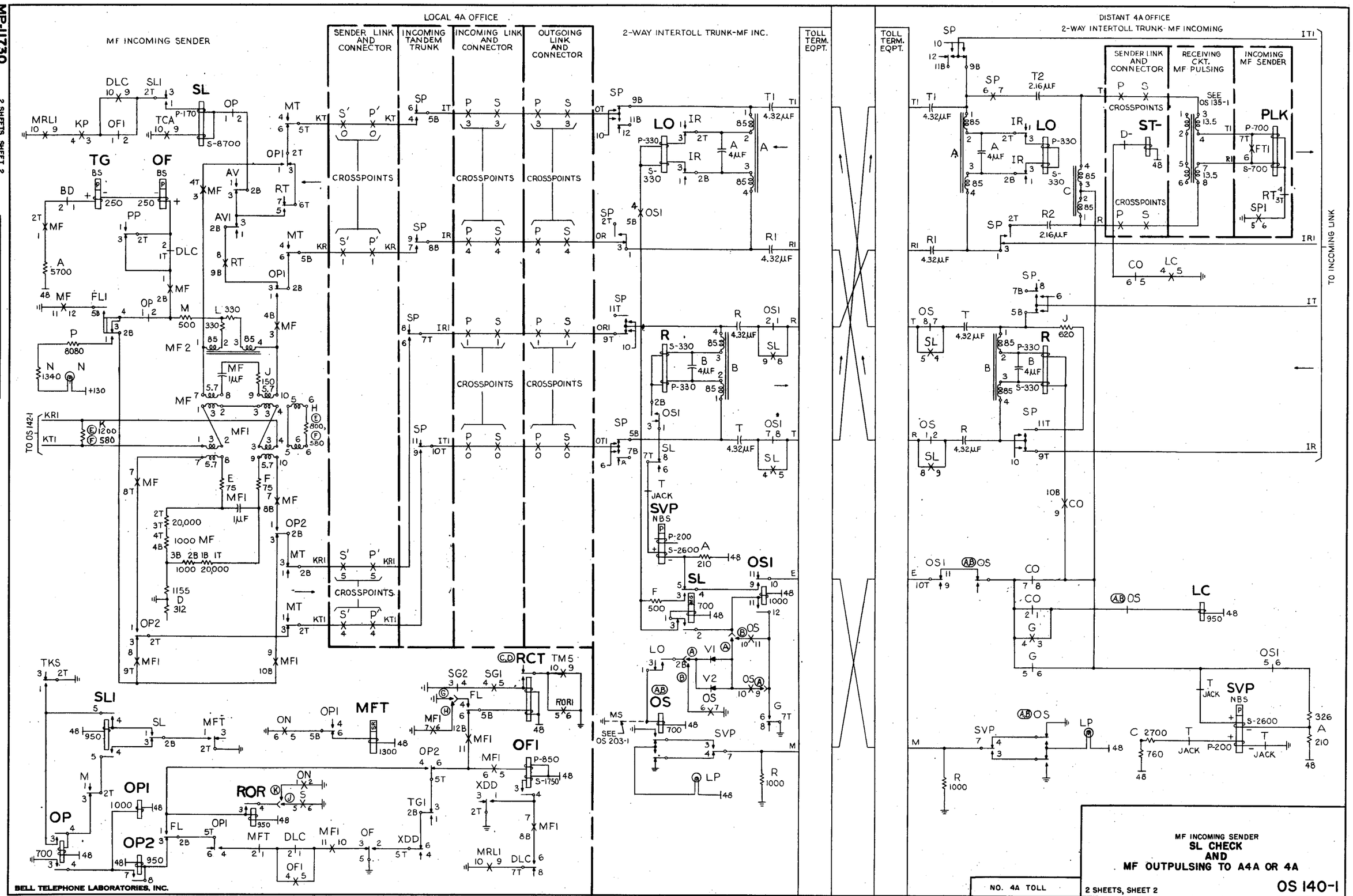

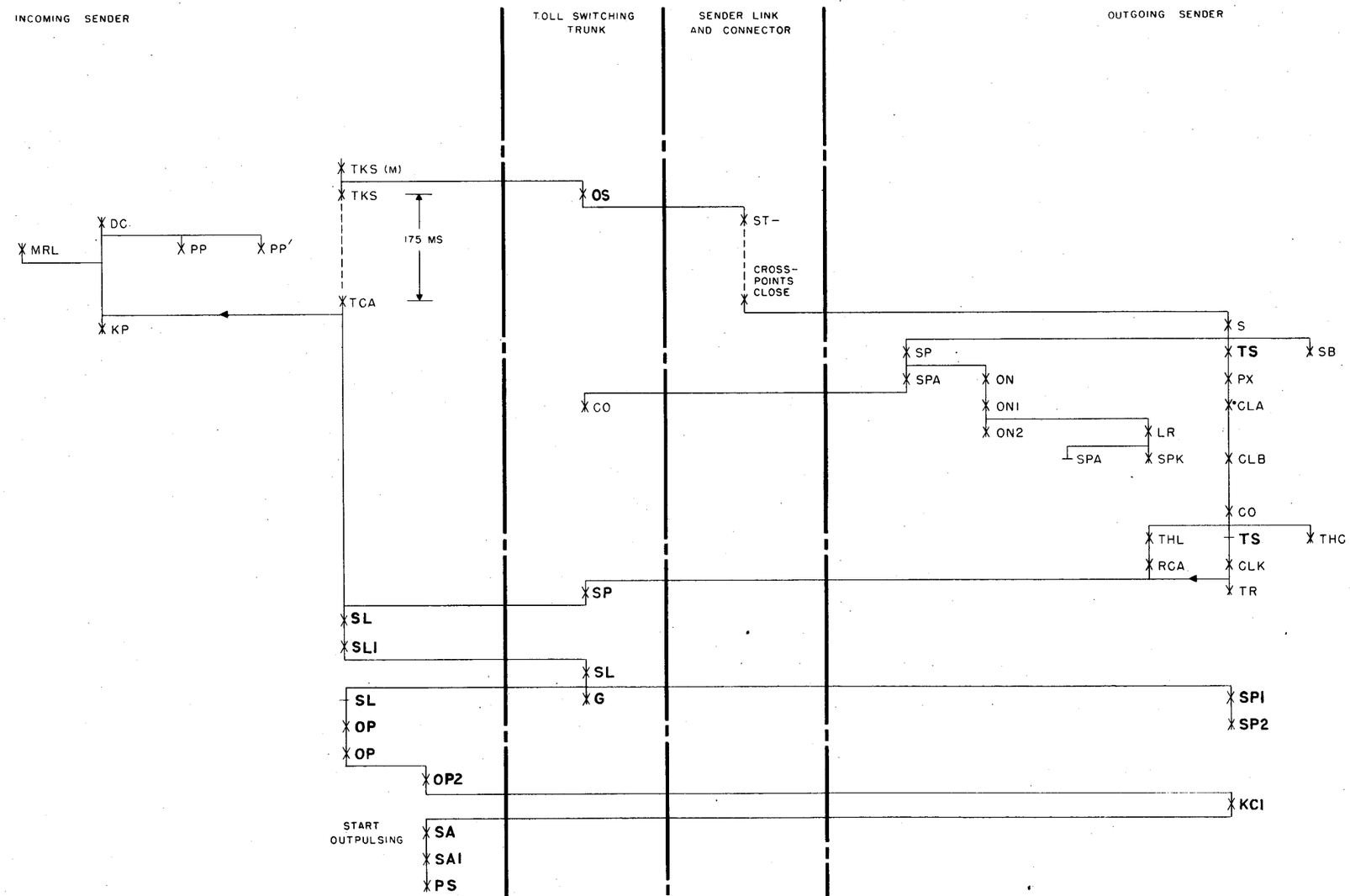

INCOMING LINK & CONNECTOR CKT.	SD-68393-01, ISS. 7
*INCOMING SENDER CKT.-MF	SD-68222-01, ISS. 16
INCOMING TRUNK CKT.	SD-68237-01, ISS. 7
INT. FRAME CKT.	SD-68058-01, ISS. 15
MARKER CKT.	SD-68388-01, ISS. 5
OUTGOING LINK & CONNECTOR CKT.	SD-68394-01, ISS. 5
OUTGOING SENDER CKT.	SD-68018-01, ISS. 25
SENDER LINK & CONNECTOR CKT.	SD-68334-01, ISS. 13
TOLL SWITCHING TRK. CKT.-REV. OR PCL	SD-68326-01, ISS. 10
TRUNK BLOCK CONNECTOR CKT.	SD-68027-01, ISS. 10

MF INCOMING SENDER

SL CHECK & SYNCHRONIZATION WITH OUTGOING SENDER

OS 141-1

2 SHEETS, SHEET 1

NO. 4A TOLL

ORDER AS BSP ITEM MP-11736

ISSUE	1	2			
DATE	11-26-51	7-27-53			

2 SHEETS, SHEET 1

MP-11736

BELL TELEPHONE LABORATORIES, INC.

PRINTED IN U. S. A.

MP-11736 2 SHEETS, SHEET 2

DATE	ISSUE	
7-26-61	1	A.S.R.
7-27-63	2	A.S.R.

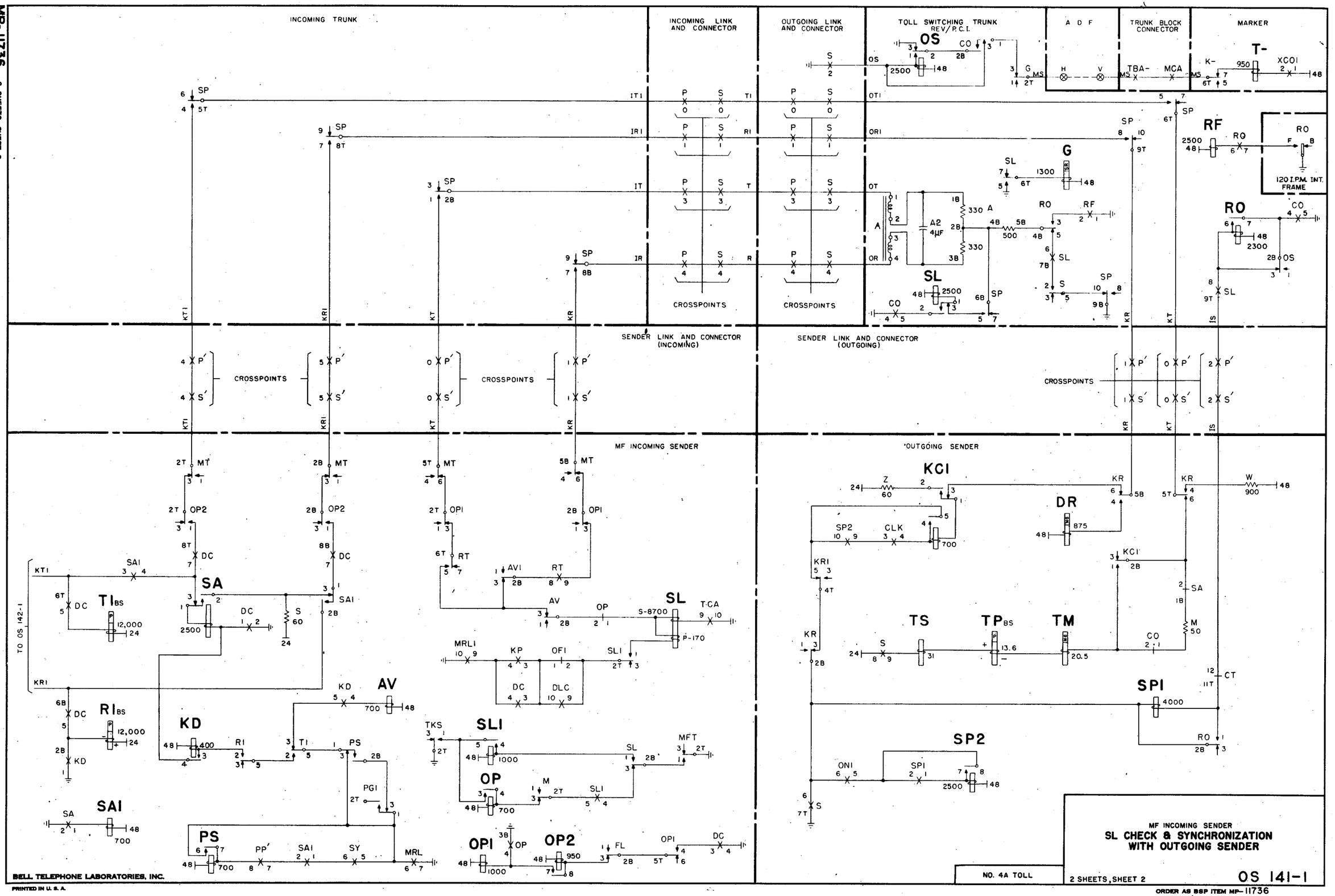

MP-11737

ISSUE			
DATE	1	2	
	11-26-51	8-14-53	

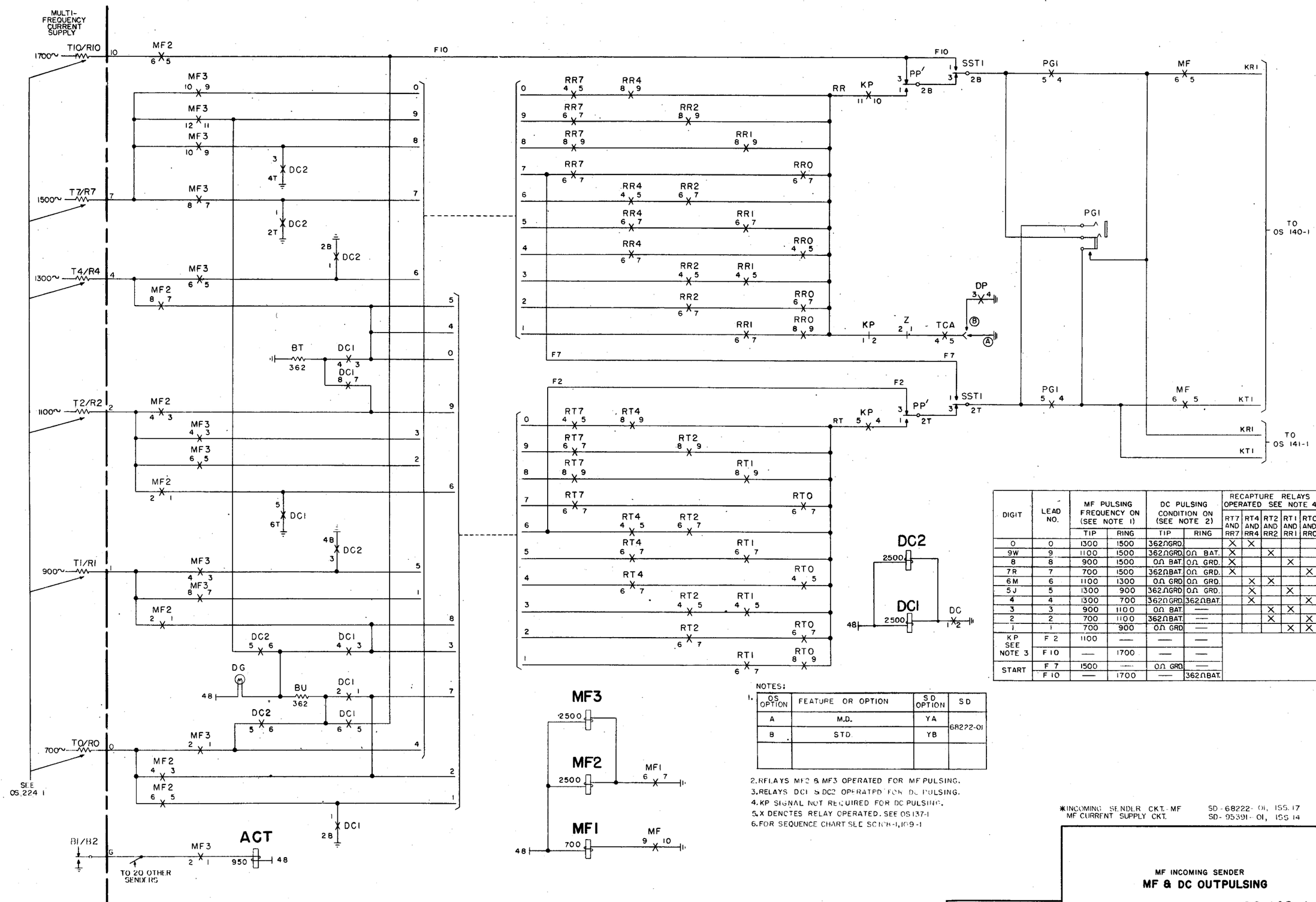

DIGIT	LEAD NO.	MF PULSING FREQUENCY ON (SEE NOTE 1)		DC PULSING CONDITION ON (SEE NOTE 2)		RECAPTURE RELAYS OPERATED SEE NOTE 4				
		TIP	RING	TIP	RING	RT7 AND RR7	RT4 AND RR4	RT2 AND RR2	RT1 AND RR1	RT0 AND RR0
0	0	1300	1500	362ΩGRD.		X	X			
9W	9	1100	1500	362ΩGRD.	0Ω BAT.	X		X		
8	8	900	1500	0Ω BAT.	0Ω GRD.	X			X	
7R	7	700	1500	362ΩBAT.	0Ω GRD.	X				X
6M	6	1100	1300	0Ω GRD.	0Ω GRD.		X	X		
5J	5	1300	900	362ΩGRD.	0Ω GRD.		X		X	
4	4	1300	700	362ΩGRD.	362ΩBAT.		X			X
3	3	900	1100	0Ω BAT.	—			X	X	
2	2	700	1100	362ΩBAT.	—			X		X
1	1	700	900	0Ω GRD.	—				X	X
KP SEE NOTE 3	F 2	1100	—	—	—					
	F 10	—	1700	—	—					
START	F 7	1500	—	0Ω GRD.	—					
	F 10	—	1700	—	362ΩBAT.					

NOTES:

1.

OS OPTION	FEATURE OR OPTION	SD OPTION	SD
A	M.D.	YA	68222-01
B	STD.	YB	

2. RELAYS MF2 & MF3 OPERATED FOR MF PULSING.
3. RELAYS DC1 & DC2 OPERATED FOR DC PULSING.
4. KP SIGNAL NOT REQUIRED FOR DC PULSING.
5. X DENOTES RELAY OPERATED. SEE OS137-1
6. FOR SEQUENCE CHART SEE SC108-1, 109-1

*INCOMING SENDER CKT.-MF — SD-68222-01, ISS. 17
MF CURRENT SUPPLY CKT. — SD-95391-01, ISS 14

MF INCOMING SENDER
MF & DC OUTPULSING

NO. 4A TOLL

OS 142-1

BELL TELEPHONE LABORATORIES, INC.
PRINTED IN U. S. A.
ORDER AS BSP ITEM MP-11737

SEQUENCE CHARTS

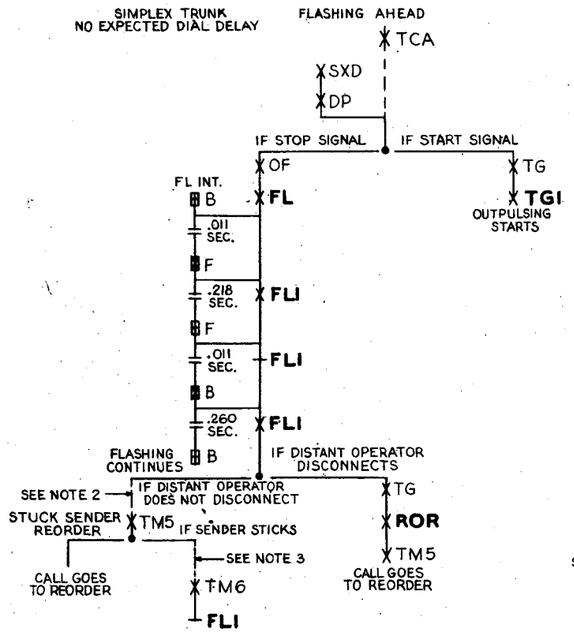

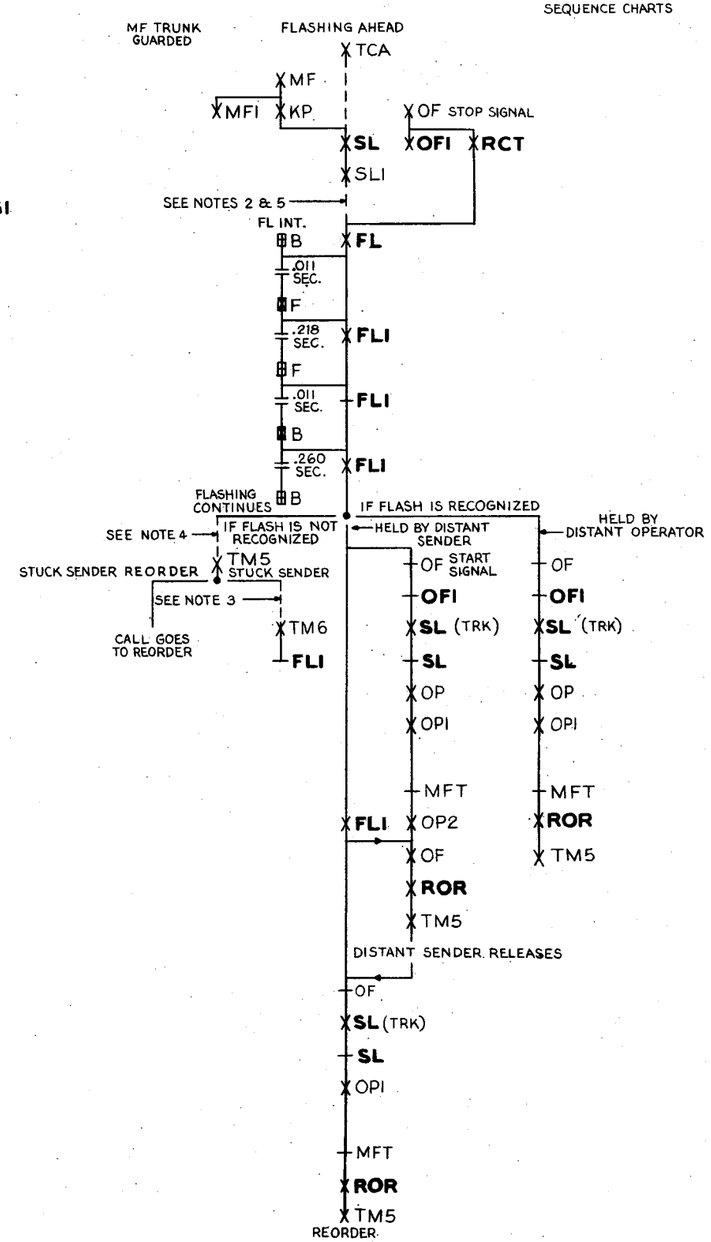

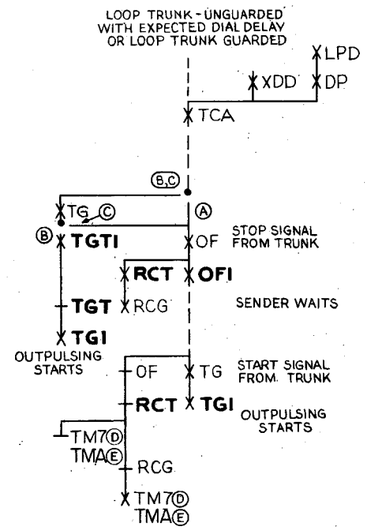

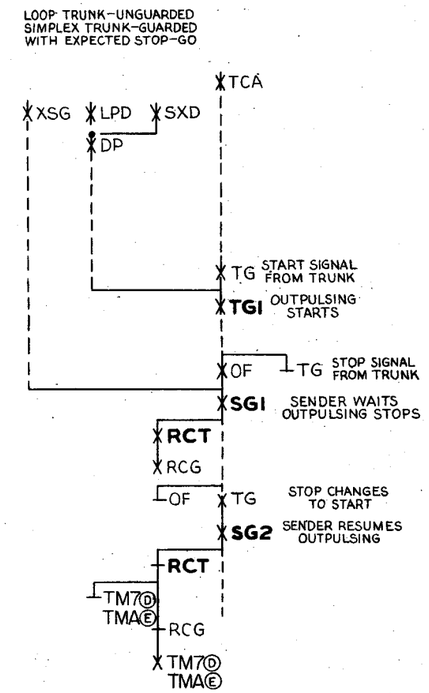

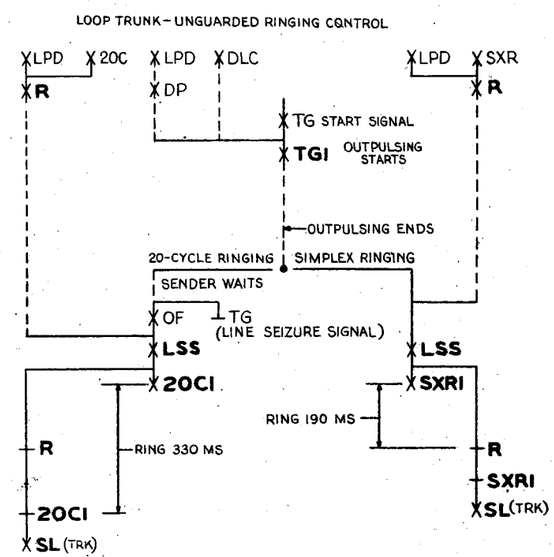

NOTES:

1.

OS OPTION	FEATURE OR OPTION	SD OPTION	SD
A	IF INITIAL SIGNAL IS STOP & IS FOLLOWED BY START		68221-01
B	IF INITIAL SIGNAL IS START & DOES NOT CHANGE.		
C	IF INITIAL SIGNAL IS START & IS FOLLOWED BY STOP		
YC	STD.	YC	
YD	M.D.	YD	
ZY	TO PREVENT BLOCKING OF OUTPULSING WITH XSG OPERATED	ZY	
D	FIG.4 PROVIDED		
E	FIG.20 PROVIDED		

2. SENDER IN ORIGINATING OFFICE TIMES OUT IN 30-40 SECONDS IF NO RESPONSE IS RECEIVED.
3. SENDER TIMES 10 SECONDS MORE, THEN OPERATES TM6 TO STOP FLASHING.
4. IF FLASH IS NOT RECOGNIZED IN 10-20 SECONDS.
5. ASSUME SENDER IN DISTANT OFFICE TIMES OUT LATER THAN SENDER IN ORIGINATING OFFICE.

MF INCOMING SENDER
RINGING AND STOP CONTROL
FLASHING AHEAD

OS 143-1 2 SHEETS, SHEET 1

NO. 4A TOLL

ORDER AS BSP ITEM MP-11738

ISSUE	1	C
DATE	11-26-51	7-29-53

2 SHEETS, SHEET 1

MP-11738

BELL TELEPHONE LABORATORIES, INC.

PRINTED IN U. S. A.

MP-11738

2 SHEETS, SHEET 2

ISSUE	1	2
DATE	11-28-51	7-29-53

MF INCOMING SENDER

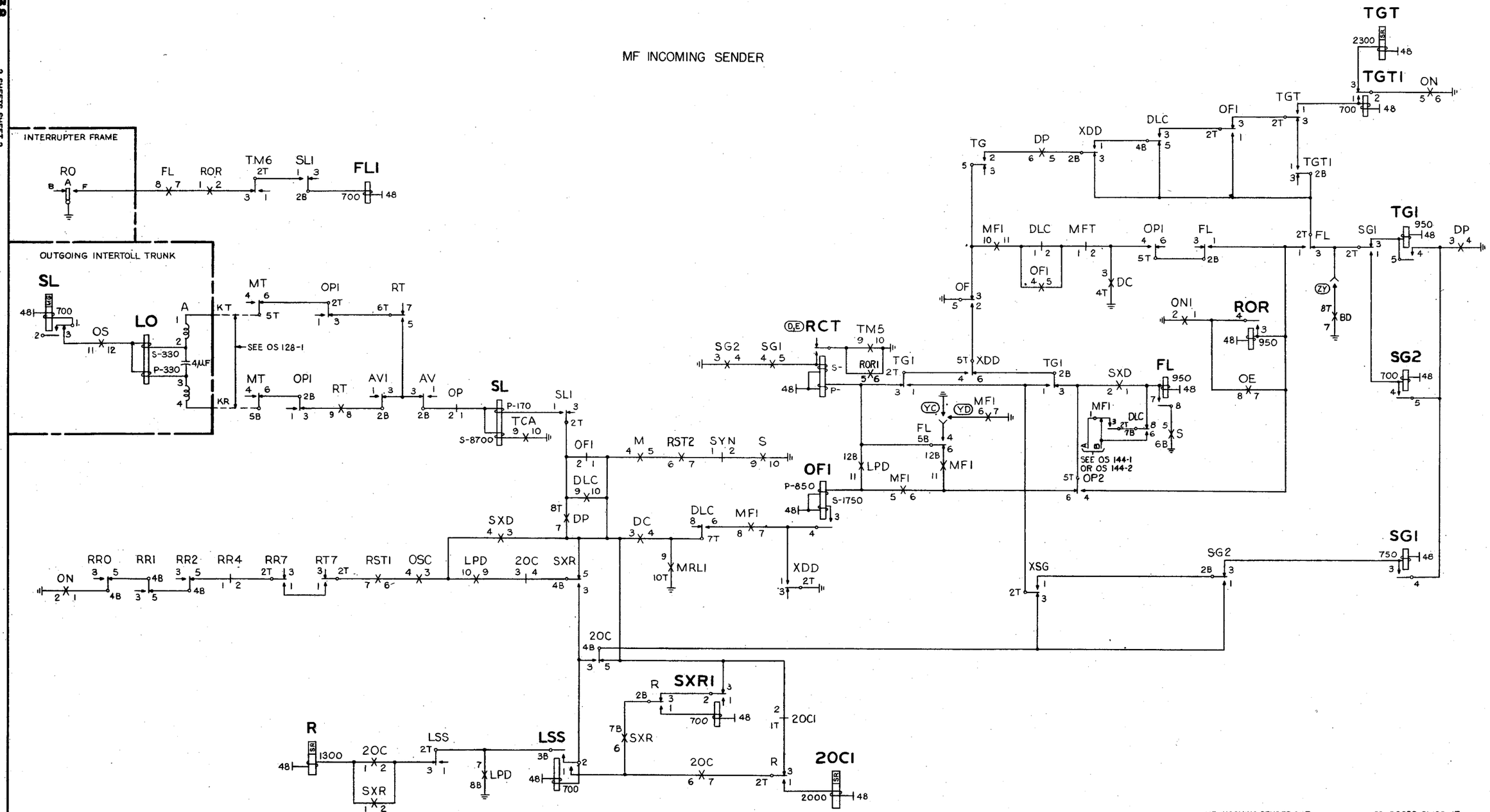

MF INCOMING SENDER CKT. SD-68222-01, ISS. 17
INTERUPTER FRAME CKT. SD-68056-01, ISS. 15
OUTGOING INTERTOLL TRK. CKT. DP/MF SD-68231-01, ISS. 8

MF INCOMING SENDER
RINGING AND STOP CONTROL
FLASHING AHEAD

NO. 4A TOLL

2 SHEETS, SHEET 2

OS 143-1

BELL TELEPHONE LABORATORIES, INC.

PRINTED IN U. S. A.

ORDER AS BSP ITEM MP-11738

NOTES:

1.

OS OPTION	FEATURE OR OPTION	SD OPTION	SD
A	MFR. DISC.		66222-01
B	STANDARD		
C	MFR. DISC.	YQ	
D	STANDARD	YR	
E	LOAD CONT. TIMING NOT PROVIDED	FIG. G	
F	LOAD CONT. TIMING PROVIDED	FIG. H,M	
G	TR. USAGE RECORDER PROVIDED	FIG. M,Y,X	
H	TR. USAGE RECORDER NOT PROVIDED	FIG. L	

2. START SIGNAL NOT RECEIVED OR OPERATOR'S ERROR. (RST NORMAL)

3. AVAILABLE CKT. FOR (CH) REL. OR (CTR) KEY OPERATED. (RST) RELAY OPERATED.

4. NO AVAILABLE CIRCUIT FOR (CH) RELAY OR (CTR) KEY NORMAL, (RST) RELAY OPERATED.

SEQUENCE CHARTS

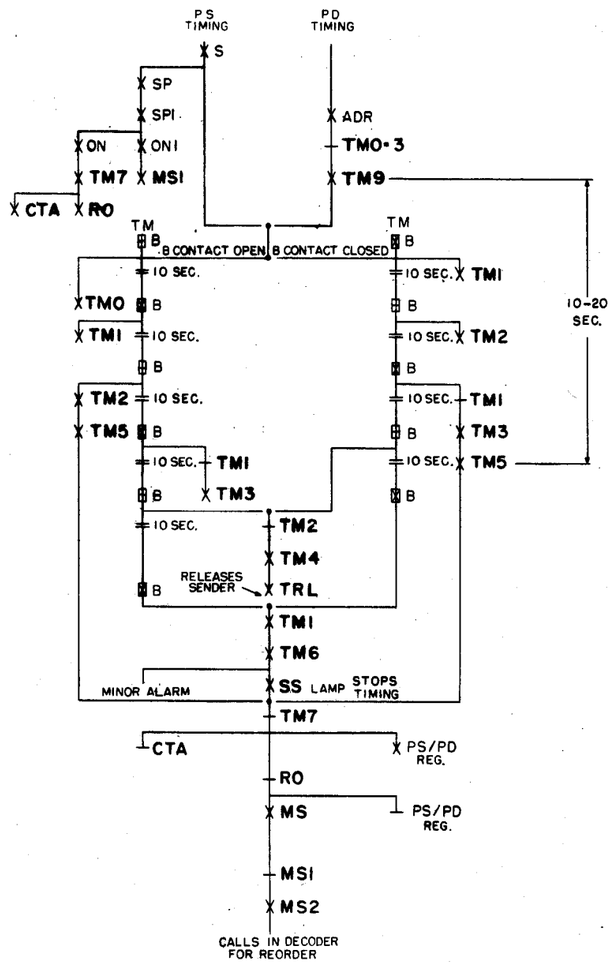

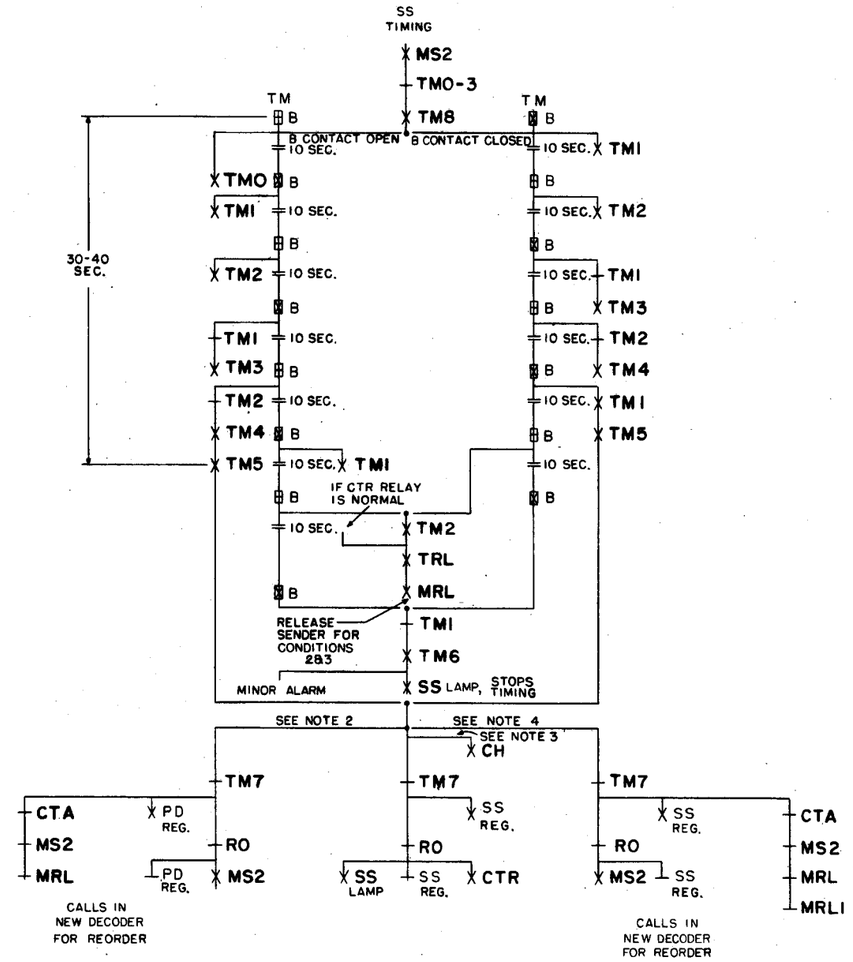

INTERRUPTER FRAME CKT.	SD-68058-01, ISS. 19
INCOMING SENDER CKT.-MF	SD-68222-01, ISS. 17
DECODER CONNECTOR CKT.	SD-68339-01, ISS. 4
DECODER CKT.	SD-68340-01, ISS. 5
MISC. CKT.- SENDER MAKE-BUSY FRAME	SD-68386-01, ISS. 5
MARKER CKT.	SD-68388-01, ISS. 5
MISC. CKT. TROUBLE RECORDER	SD-68392-01, ISS. 5
TRAFFIC REGISTER CKT.	SD-68412-01, ISS. 7

MF INCOMING SENDER
OVER-ALL TIMING AND MISCELLANEOUS TROUBLE CONDITIONS
FIG. 4

OS 144-1 — 2 SHEETS, SHEET 1

NO. 4A TOLL

ORDER AS BSP ITEM MP-11763

ISSUE	1	2
DATE	1-18-52	9-1-53

2 SHEETS, SHEET 1

MP-11763

BELL TELEPHONE LABORATORIES, INC.
PRINTED IN U. S. A.

MP-11763 2 SHEETS, SHEET 2

ISSUE	1	2
DATE	1-18-52	9-1-53

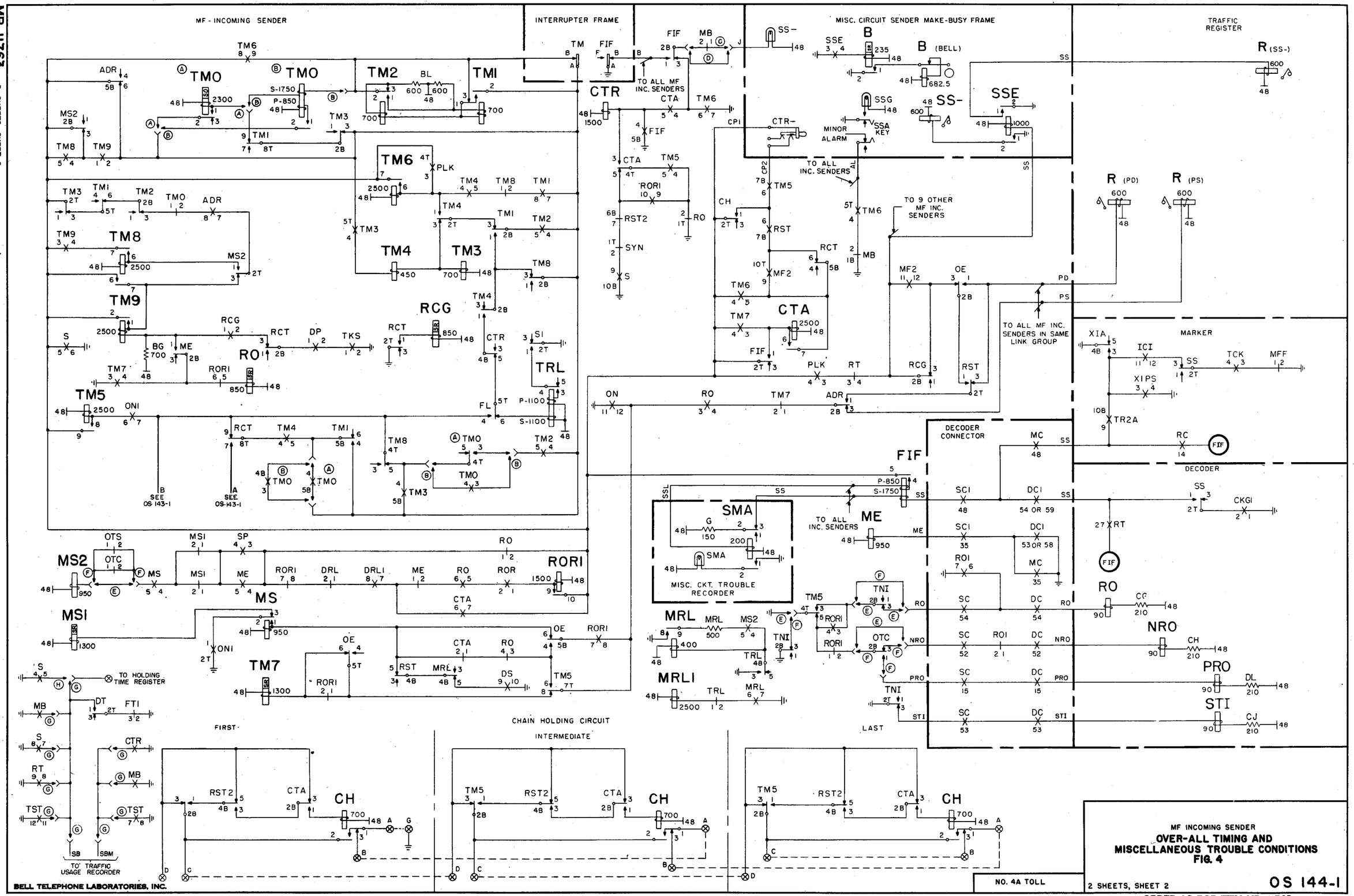

MF INCOMING SENDER
OVER-ALL TIMING AND MISCELLANEOUS TROUBLE CONDITIONS
FIG. 4

NO. 4A TOLL

2 SHEETS, SHEET 2

OS 144-1

BELL TELEPHONE LABORATORIES, INC.

PRINTED IN U. S. A.

ORDER AS BSP ITEM MP-11763

NOTES:
1.

OS OPTION	FEATURE OR OPTION	SD OPTION	SD
A	LOAD CONTROL TIMING NOT PROVIDED	FIG.G	68222-01
B	LOAD CONTROL TIMING PROVIDED	FIG.H	
C	MFR.DISC.	YQ	
D	STD.	YR	
E	TRAFFIC USAGE RECORDER PROVIDED	YX	
F	TRAFFIC USAGE RECORDER NOT PROVIDED	FIG.L	
G	LOAD CONTROL TIMING PROVIDED WITH TRAFFIC USAGE RECORDER	FIG.M	

SEQUENCE CHART

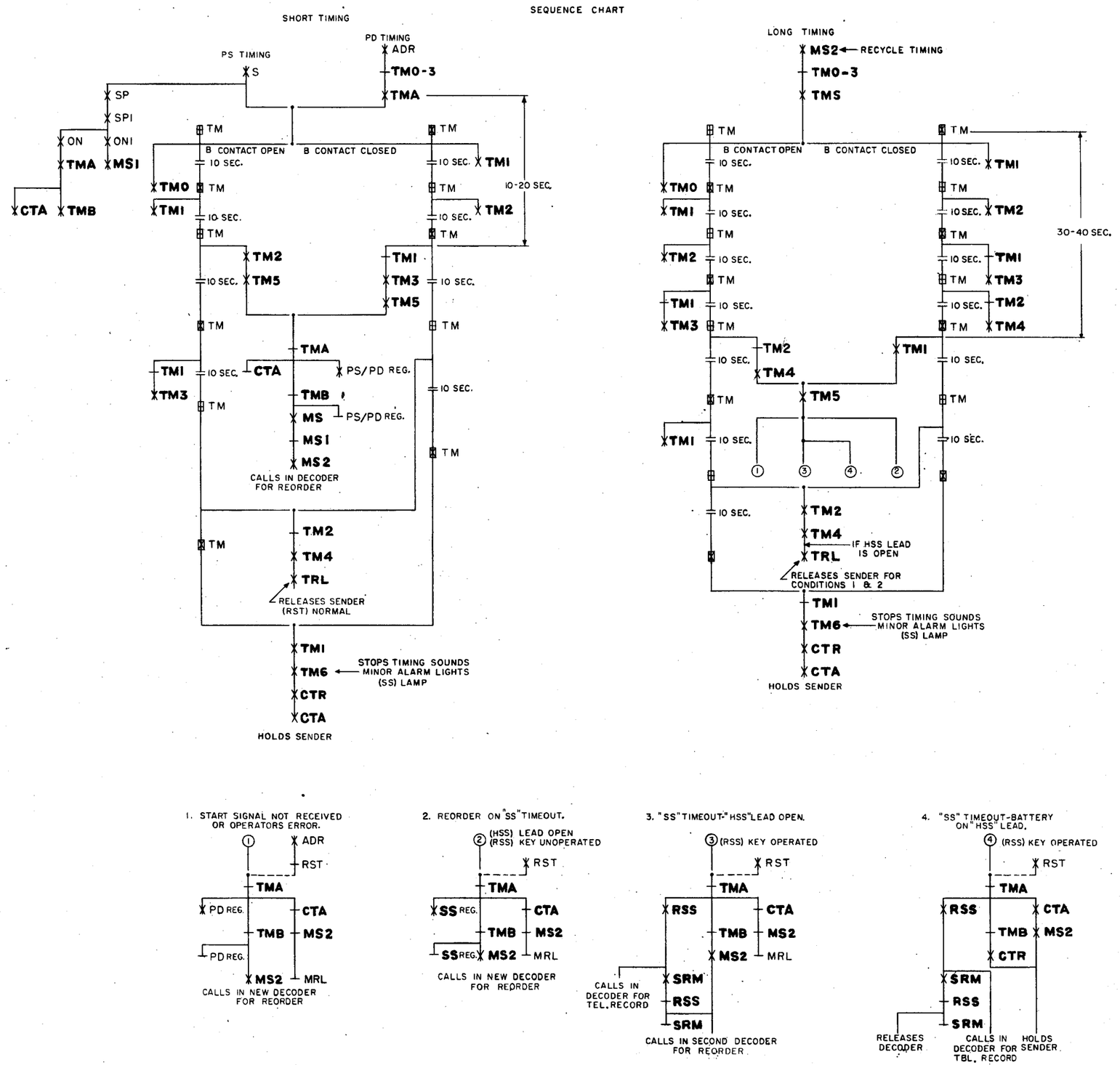

DECODER CKT.	SD-68340-01, ISS.5
DECODER CONN.CKT.	SD-68339-01, ISS.4
INCOMING SENDER CKT.-MF	SD-68222-01, ISS.17
INTERRUPTER FRAME	SD-68058-01, ISS.15
MARKER CKT.	SD-68398-01, ISS.5
MARKER CONN.CKT.	SD-68395-01, ISS.5
MISC.CKT.FOR SENDER MAKE BUSY FRAME	SD-68386-01, ISS.15
MISC.CKT.FOR TROUBLE RECORDER	SD-68392-01, ISS.5
TRAFFIC REGISTER CKT.	SD-68412-01, ISS.7

MF INCOMING SENDER OVER-ALL TIMING, HOLDING AND RECORDING OF STUCK SENDERS FIG.20

OS 144-2

2 SHEETS, SHEET 1-

NO. 4A TOLL

ORDER AS BSP ITEM MP-11797

ISSUE	1	E.E.C. J.E.C.
DATE	11-7-59	

2 SHEETS, SHEET 1

MP-11797

BELL TELEPHONE LABORATORIES, INC.

PRINTED IN U. S. A.

MP-11797 2 SHEETS, SHEET 2

ISSUE	DATE
1	11-7-63

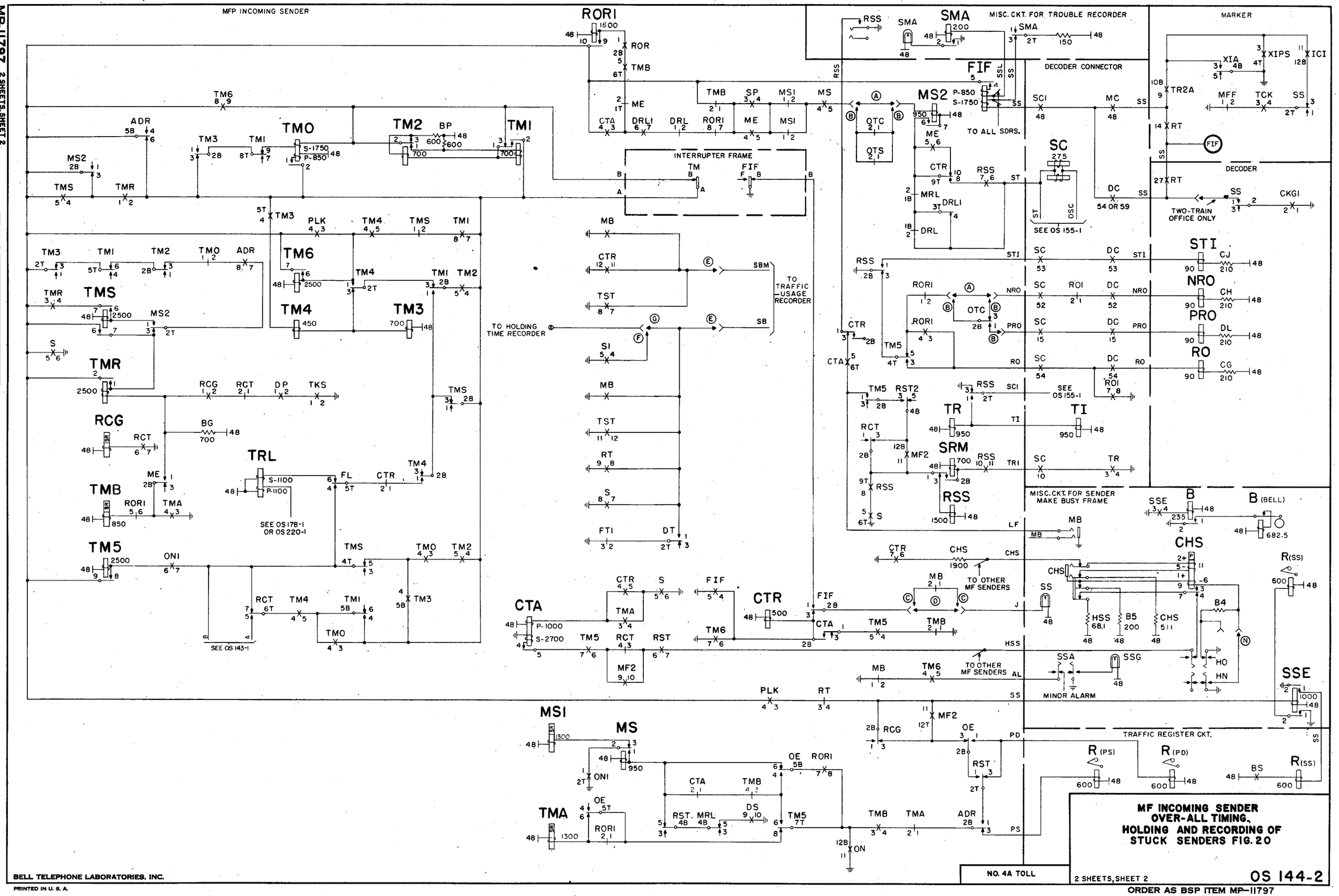

MF INCOMING SENDER OVER-ALL TIMING, HOLDING AND RECORDING OF STUCK SENDERS FIG. 20

2 SHEETS, SHEET 2

OS 144-2

MP-11798

ISSUE		
DATE	1	6-1-59

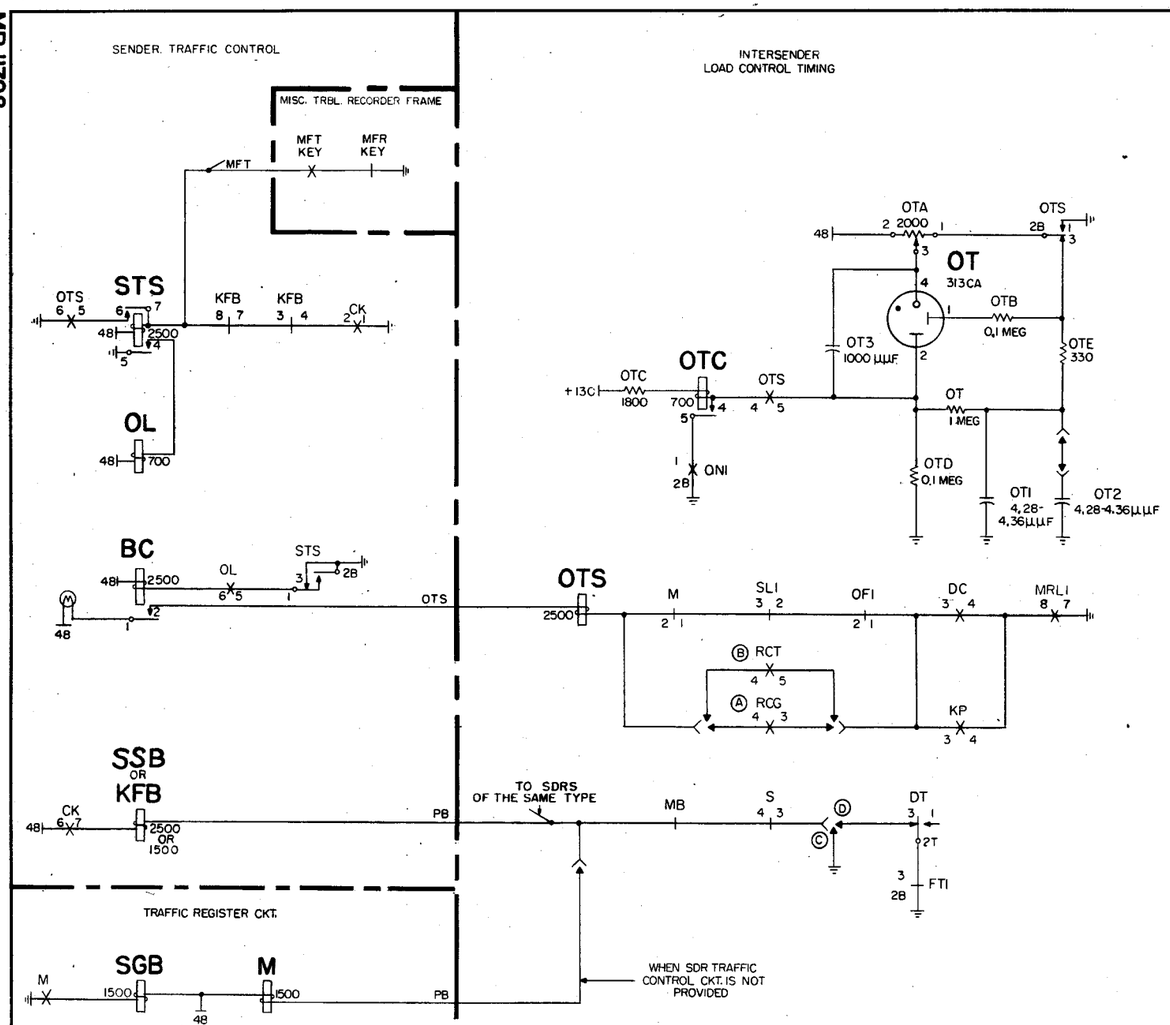

NOTES:

1.

OS OPTION	FEATURE OR OPTION	SD OPTION	SD
A	FIG. 4 PROVIDED		68222-01
B	FIG. 2G PROVIDED		
C	LOAD CONTROL TIMING NOT PROVIDED	FIG. L	
D	LOAD CONTROL TIMING PROVIDED	FIG. M	

2. THE LACK OF OUTGOING SENDER PREVENTS THE OPERATION OF SENDER (SL) & (SLI) RELAYS.

3. BATTERY CONNECTED TO (OTS) WINDING FROM SDR. TRAFFIC CONTROL CKT. WHEN A SHORTAGE OF SENDERS EXISTS IN A KEY FRAME GROUP.

SEQUENCE CHART
LOAD CONTROL TIMING

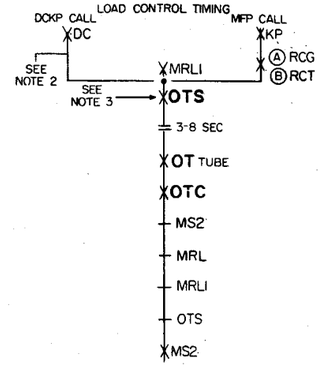

CALLS IN DECODER FOR
PRO (OVERLOAD ANNOUNCEMENT
TRUNK) ROUTING

INCOMING SENDER CKT-MF	SD-68222-01,	ISS. 17
MISC. CKT. TROUBLE RECORDER FR.	SD-68392-01,	ISS. 5
TRAFFIC REGISTER CKT.	SD-68412-01,	ISS. 7
SENDER TRAFFIC CONTROL CKT.	SD-68455-01,	ISS. 1

MF INCOMING SENDER
INTERSENDER LOAD CONTROL
TIMING

NO. 4A TOLL

OS 145-1

BELL TELEPHONE LABORATORIES, INC.
PRINTED IN U. S. A.

ORDER AS BSP ITEM MP-11798

MP-11642

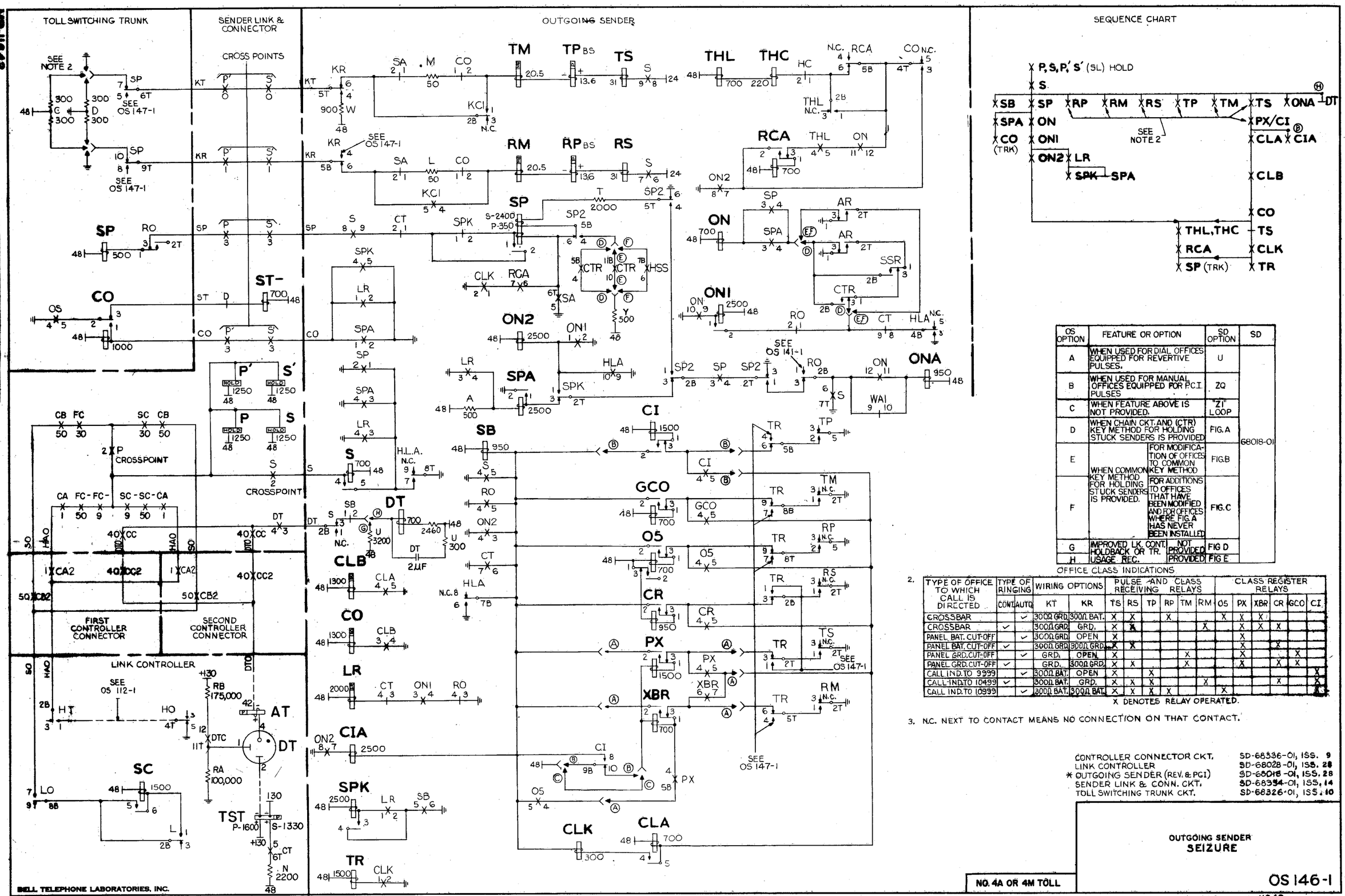

OS OPTION	FEATURE OR OPTION		SD OPTION	SD
A	WHEN USED FOR DIAL OFFICES EQUIPPED FOR REVERTIVE PULSES.		U	68018-01
B	WHEN USED FOR MANUAL OFFICES EQUIPPED FOR P.C.I. PULSES		ZQ	
C	WHEN FEATURE ABOVE IS NOT PROVIDED.		"ZI" LOOP	
D	WHEN CHAIN CKT. AND (CTR) KEY METHOD FOR HOLDING STUCK SENDERS IS PROVIDED		FIG. A	
E	WHEN COMMON KEY METHOD FOR HOLDING STUCK SENDERS IS PROVIDED.	FOR MODIFICATION OF OFFICES TO COMMON KEY METHOD	FIG. B	
F		FOR ADDITIONS TO OFFICES THAT HAVE BEEN MODIFIED AND FOR OFFICES WHERE FIG. A HAS NEVER BEEN INSTALLED	FIG. C	
G	IMPROVED L.K. CONT. HOLDBACK OR TR. USAGE REC.	NOT PROVIDED	FIG D	
H		PROVIDED	FIG E	

OFFICE CLASS INDICATIONS

2.

TYPE OF OFFICE TO WHICH CALL IS DIRECTED	TYPE OF RINGING		WIRING OPTIONS		PULSE AND CLASS RECEIVING RELAYS						CLASS REGISTER RELAYS					
	CONT.	AUTO	KT	KR	TS	RS	TP	RP	TM	RM	O5	PX	XBR	CR	GCO	CI
CROSSBAR		✓	300Ω GRD.	300Ω BAT.	X	X		X			X	X	X			
CROSSBAR	✓		300Ω GRD.	GRD.	X	X				X		X	X	X		
PANEL BAT. CUT-OFF		✓	300Ω GRD.	OPEN	X							X				
PANEL BAT. CUT-OFF	✓		300Ω GRD.	300Ω GRD.	X	X						X		X		
PANEL GRD. CUT-OFF		✓	GRD.	OPEN.	X				X			X			X	
PANEL GRD. CUT-OFF	✓		GRD.	300Ω GRD.	X	X			X			X		X	X	
CALL IND. TO 9999		✓	300Ω BAT.	OPEN	X		X									X
CALL IND. TO 10499	✓		300Ω BAT.	GRD.	X	X	X			X				X		X
CALL IND. TO 10999		✓	300Ω BAT.	300Ω BAT.	X	X	X	X			X					X

X DENOTES RELAY OPERATED.

3. N.C. NEXT TO CONTACT MEANS NO CONNECTION ON THAT CONTACT.

CONTROLLER CONNECTOR CKT. SD-68336-01, ISS. 9
LINK CONTROLLER SD-68028-01, ISS. 28
* OUTGOING SENDER (REV. & PGI) SD-68018-01, ISS. 28
SENDER LINK & CONN. CKT. SD-68334-01, ISS. 14
TOLL SWITCHING TRUNK CKT. SD-68326-01, ISS. 10

NO. 4A OR 4M TOLL

OUTGOING SENDER
SEIZURE

OS 146-1

BELL TELEPHONE LABORATORIES, INC.
PRINTED IN U. S. A.
ORDER AS BSP ITEM MP-11642

MP-11643

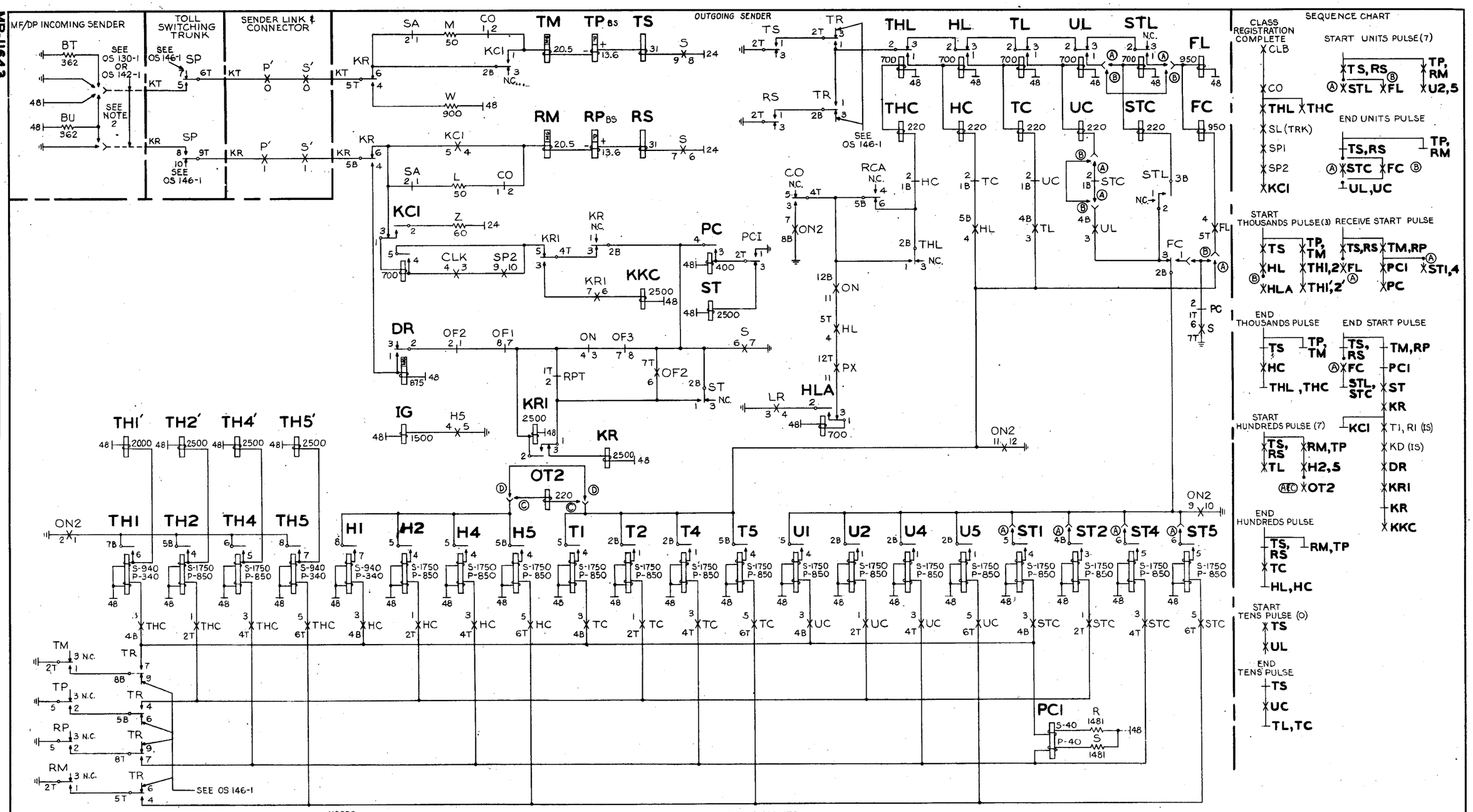

NOTES:

1.

OS OPTION	FEATURE OR OPTION	SD OPTION	SD
A	FOR MANUAL OFFICES REQUIRING PCI PULSING	ZQ ZL	68018-01
B	FOR OFFICES NOT REQUIRING PCI PULSING.	LOOP WIRING & ZM	68018-01
C	FOR PCI OFFICES WITH MORE THAN 10,000 NUMBERS.	H	68018-01
D	FOR PCI OFFICES WITH LESS THAN 10,000 NUMBERS.	LOOP WIRING	63018-01

2. N.C. NEXT TO CONTACT MEANS NO CONNECTION ON THAT CONTACT.

3. REGISTRATION OF DIGITS

DIGIT	PULSES RECEIVED		PULSING RELAYS						REGISTER RELAYS
	KT LEAD	KR LEAD	TS	RS	TP	RP	TM	RM	
0	362Ω GRD.		X						NONE
1	0Ω GRD.		X				X		1
2	362Ω BAT.		X		X				2
3	0Ω BAT.		X		X		X		1,2
4	362Ω GRD.	362Ω BAT.	X	X		X			4
5	362Ω GRD.	0Ω GRD.	X	X				X	5
6	0Ω GRD.	0Ω GRD.	X	X			X	X	1,5
7	362Ω BAT.	0Ω GRD.	X	X	X			X	2,5
8	0Ω BAT.	0Ω GRD.	X	X	X		X	X	1,2,5
9	362Ω GRD.	0Ω BAT.	X	X		X		X	4,5
START	0Ω GRD.	362Ω BAT.	X	X		X	X		1,4

X DENOTES RELAY OPERATED.

INCOMING SENDER CKT. DP	SD-68221-01, ISS. 17
* OUTGOING SDR. CKT.	SD-68018-01, ISS. 28
SDR. LINK & CONN. CKT.	SD-68334-01, ISS. 14
TOLL SWITCHING TRK. CKT.	SD 68326-01, ISS. 10

ISSUE	DATE
1	7-16-51
2	11-20-53

NO. 4A OR 4M TOLL

OUTGOING SENDER
REGISTRATION

OS 147-1

BELL TELEPHONE LABORATORIES, INC.
PRINTED IN U. S. A.
ORDER AS BSP ITEM MP-11643

MP-11645

ISSUE	DATE
1	7-11-51
2	12-21-53

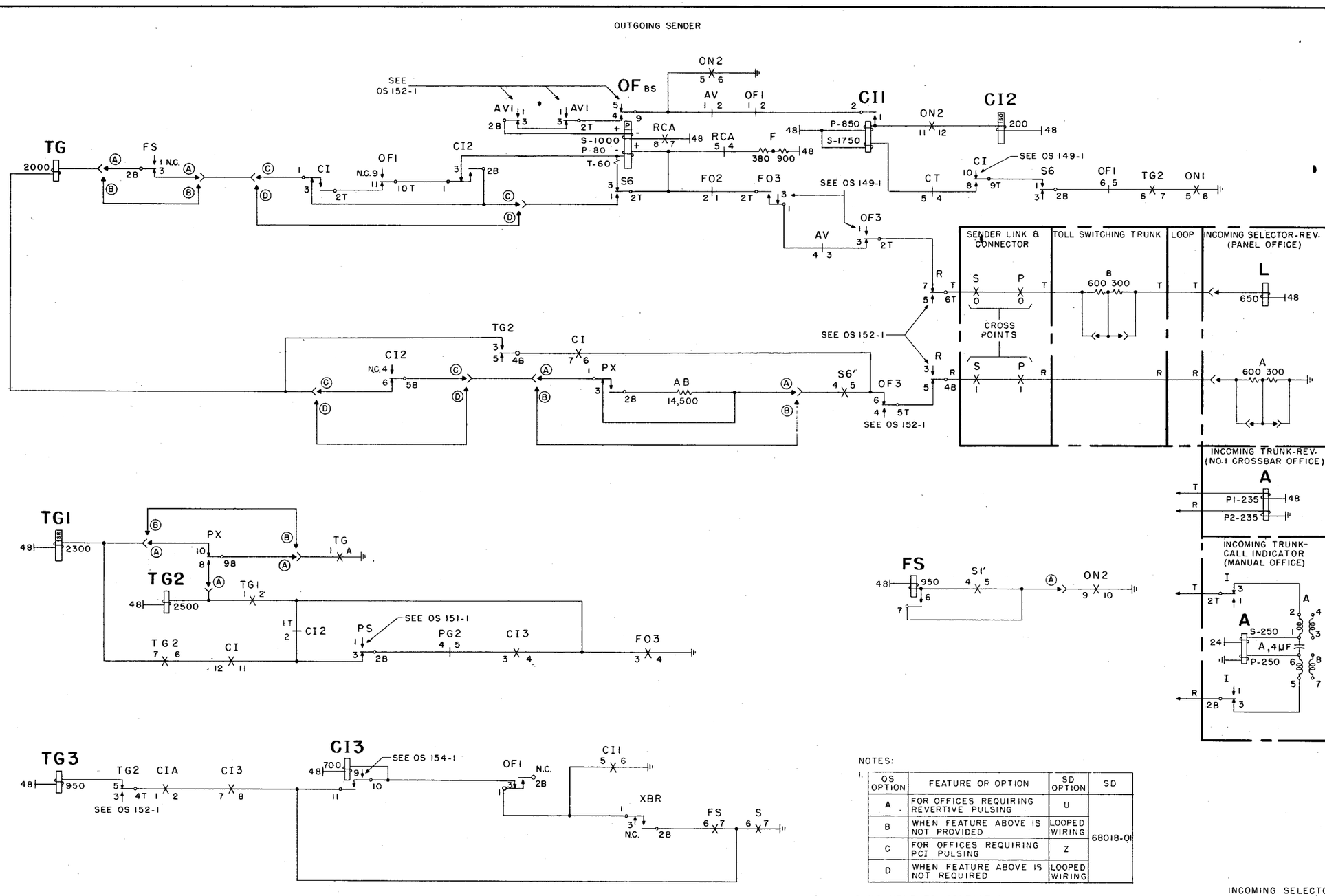

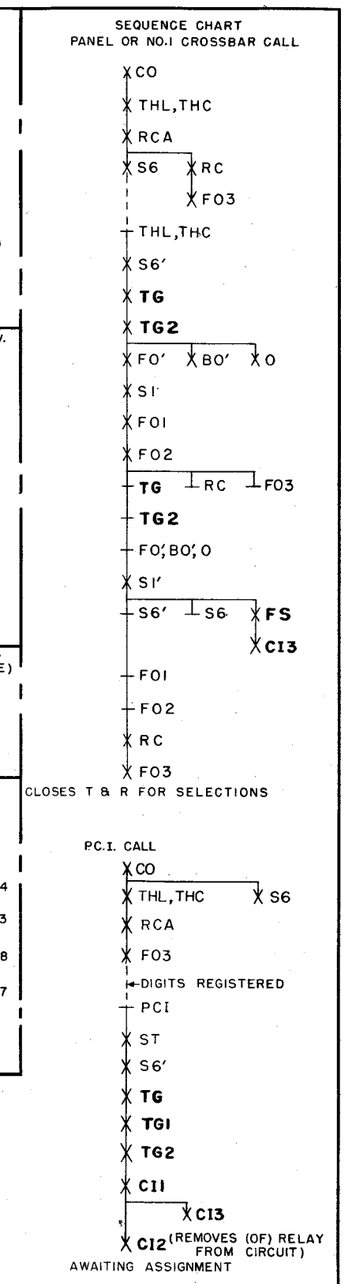

NOTES:

1.

OS OPTION	FEATURE OR OPTION	SD OPTION	SD
A	FOR OFFICES REQUIRING REVERTIVE PULSING	U	68018-01
B	WHEN FEATURE ABOVE IS NOT PROVIDED	LOOPED WIRING	
C	FOR OFFICES REQUIRING PCI PULSING	Z	
D	WHEN FEATURE ABOVE IS NOT REQUIRED	LOOPED WIRING	

2 N.C. NEXT TO CONTACT MEANS NO CONNECTION ON THAT CONTACT.

INCOMING SELECTOR-REV. CKT.	SD-21115-01, ISS.25
INCOMING TRUNK (CALL INDICATOR) CKT.	SD-12900-01, ISS.22
INCOMING TRUNK-REV. CKT.	SD-25302-01, ISS.23
*OUTGOING SENDER (REV/PCI) CKT.	SD-68018-01, ISS.28
SENDER LINK & CONNECTOR CKT.	SD-68334-01, ISS.14
TOLL SWITCHING TRUNK (REV/PCI) CKT.	SD-68326-01, ISS.10

OUTGOING SENDER

TRUNK TEST

NO. 4A OR 4M TOLL

OS 148-1

BELL TELEPHONE LABORATORIES, INC.
PRINTED IN U. S. A.
ORDER AS BSP ITEM MP-11645

MP-11646

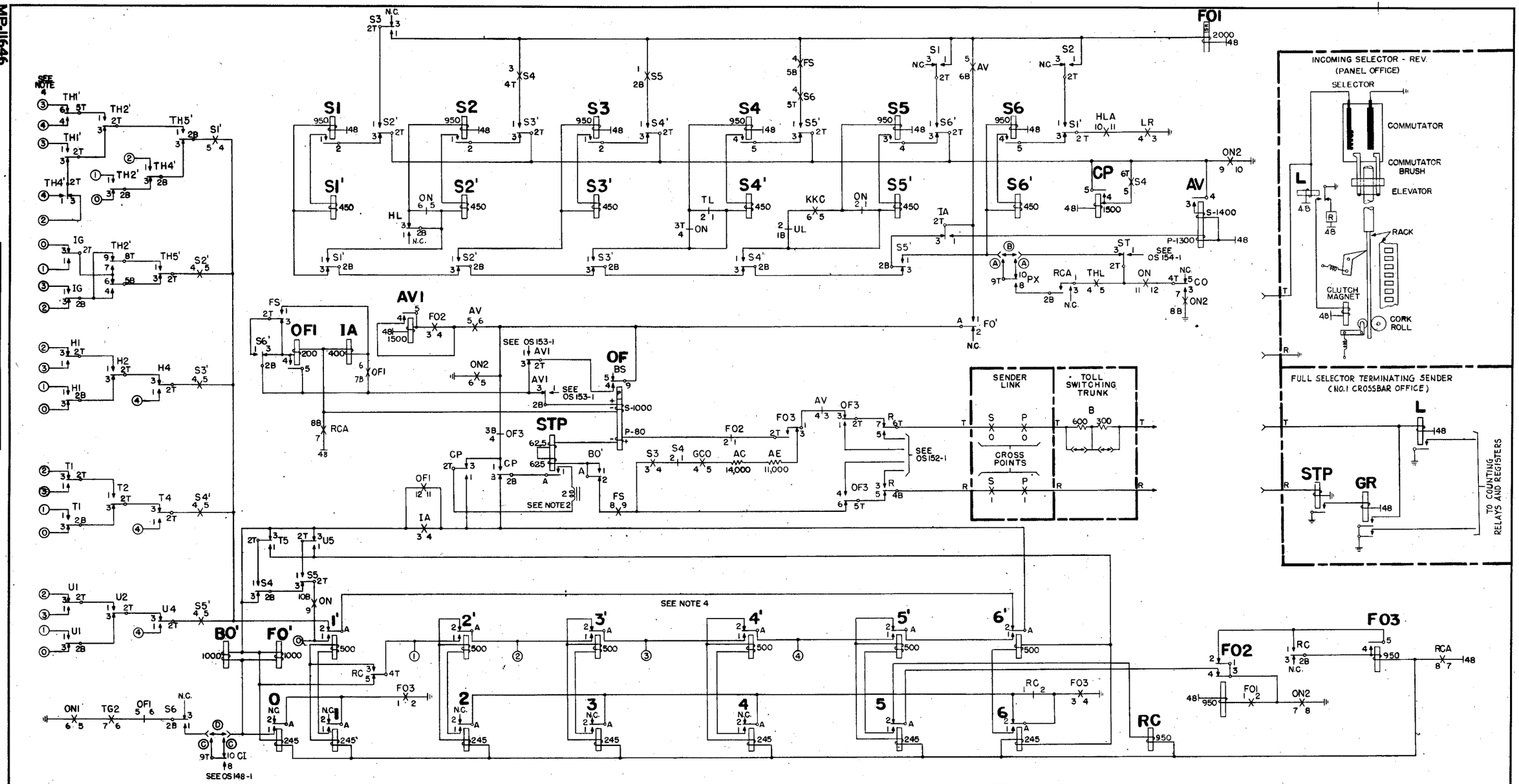

NOTES:

1.

OS OPTION	FEATURE OR OPTION	SD OPTION	SD
A	FOR OFFICES REQUIRING REVERTIVE PULSING	U	68018-01
B	WHEN ABOVE FEATURE IS NOT REQUIRED	LOOPED WIRING	
C	FOR OFFICES REQUIRING P.C.I. PULSING	ZQ	
D	WHEN ABOVE FEATURE IS NOT PROVIDED	LOOPED WIRING	

NOTES: (CONTINUED)

2. 200CL RETARD COIL IS FURNISHED AS PART OF 268A RELAY.
3. FOR SEQUENCE CHART SEE SCIII-1 & 112-1.
4. CONNECT WIRES TERMINATING IN NUMBERED CIRCLES TO COUNTING RELAYS 1 TO 4.
5. N.C. NEXT TO CONTACT MEANS NO CONNECTION ON THAT CONTACT.

TABLE A

SEQUENCE OF SELECTIONS	
SELECTION MADE	RELAYS OPERATED
TRUNK TEST	S6, S6'
INCOMING BRUSH	S1, S1'
INCOMING GROUP	S2, S2'
FINAL BRUSH	S3, S3'
FINAL TENS	S4, S4'
FINAL UNITS	S5, S5'
INCOMING ADVANCE	S6, S6'

TABLE B

PULSE COUNTING									
DIGIT	COUNTERS OPERATED								
0	0								
1	1	0							
2	2	1	0						
3	3	2	1	0					
4	4	3	2	1	0				
5	6	5	4	3	2	0			
6	1	6	5	4	3	2	0		
7	2	1	6	5	4	3	2	0	
8	3	2	1	6	5	4	3	2	0
9	4	3	2	1	6	5	4	3	2	0

FULL SELECTOR TERM SENDER CKT.	SD-25013-01, ISS 39
INCOMING SELECTOR-REV. CKT.	SD-21115-01, ISS 25
OUTGOING SENDER CKT.	SD-68018-01, ISS 28
SENDER LINK & CONNECTOR CKT.	SD-68334-01, ISS 14
TOLL SWITCHING TRUNK CKT.	SD-68326-01, ISS 10

OUTGOING SENDER
REVERTIVE PULSE COUNTING AND SEQUENCE OF SELECTIONS

NO. 4A OR 4M TOLL

OS149-1

BELL TELEPHONE LABORATORIES, INC.
PRINTED IN U. S. A.
ORDER AS BSP ITEM MP-11646

MP-11718

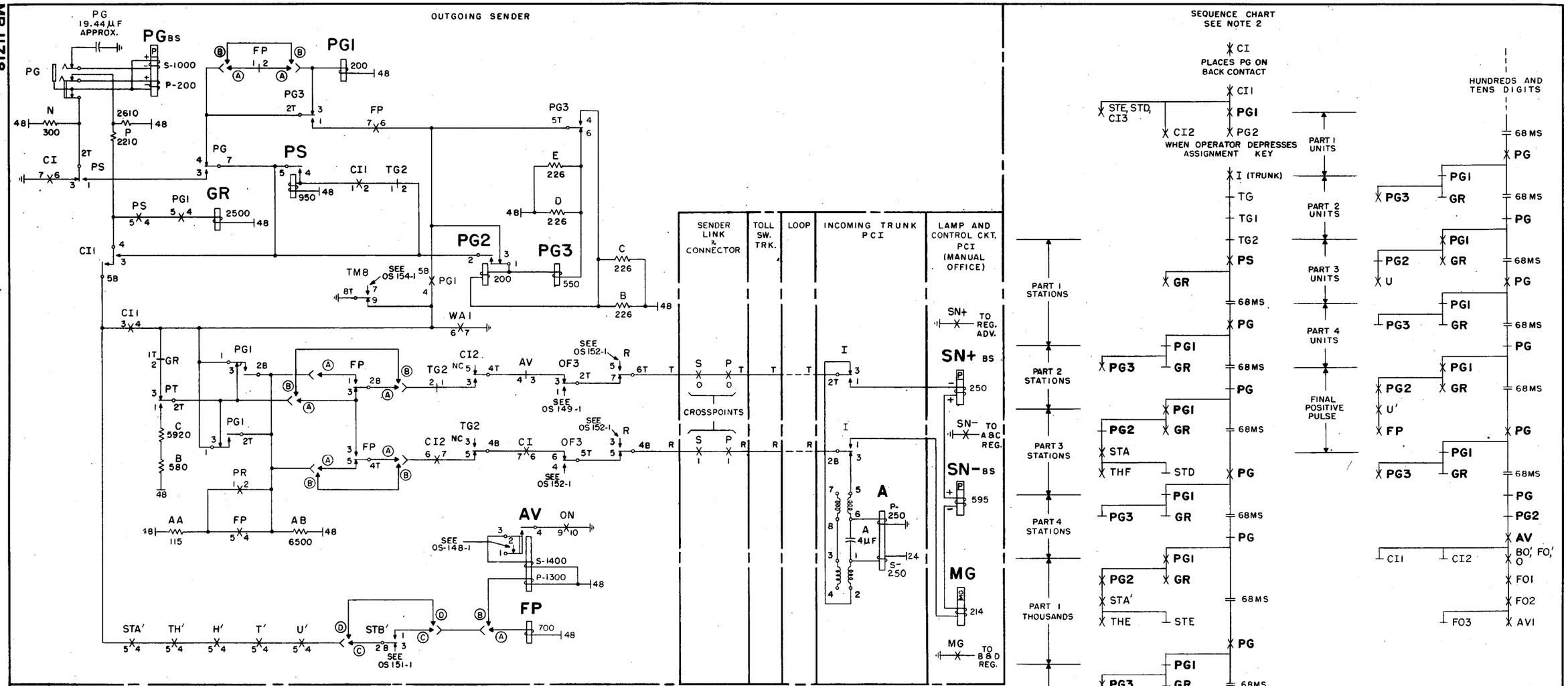

NOTES:

1.

OS OPTION	FEATURE OR OPTION	SD OPTION	SD
A	HEAVY FINAL PULSE REQ.	X	68018-01
B	FEATURE ABOVE NOT REQ.	LOOPED WIRING & T	
C	PROVIDED WHEN OFFICE* HAS OVER 10,000 LINES	Y	
D	WHEN ABOVE FEATURE IS NOT PROVIDED	LOOPED WIRING	

2. SEQUENCE CHART SHOWS OUTPULSING FOR NUMBERS LESS THAN 10,000 AND REQUIRING A FINAL PULSE.

3.

PULSE	PULSE CONTROL RELAYS		
	PG1	PG2	PG3
1	X	X	
2		X	X
3	X		X
4			

X DENOTES RELAY OPERATED

4. PCI PULSES

DIGIT	HUNDREDS TENS UNITS				THOUSANDS				STATIONS			
0	–	n	–	n	–	n	–	n	–	n	–	n
1	P	n	–	n	–	n	–	N	P	n	–	n
2	–	N	–	n	P	n	–	n				
3	P	N	–	n	P	n	–	N				
4	–	n	P	n	–	N	–	n				
5J	–	n	–	N	–	N	–	N	–	n	P	n
6M	P	n	–	N	P	N	–	n	–	n	–	N
7R	–	N	–	N	P	N	–	N	P	N	–	n
8	P	N	–	N	–	n	P	n				
9W	–	n	P	N	–	n	P	N	–	N	–	n

LEGEND:
– DENOTES BLANK PULSE
n DENOTES LIGHT NEGATIVE PULSE
N DENOTES HEAVY NEGATIVE PULSE
P DENOTES LIGHT POSITIVE PULSE

5. NC NEXT TO CONTACT MEANS NO CONNECTION ON THAT CONTACT.

ISSUE		
DATE		
10-22-51	1	A.S.H. R.B.B.
11-29-53	2	J.B.K. E.A.G.

OUTGOING SENDER

PCI PULSE GENERATION

NO. 4A OR 4M TOLL

OS 150-1

BELL TELEPHONE LABORATORIES, INC.

PRINTED IN U. S. A.

ORDER AS BSP ITEM MP-11718

MP-11717

ISSUE	DATE		
1	10-22-51	A.S.R.	
2	11-23-53	J.B.K.	

OUTGOING SENDER

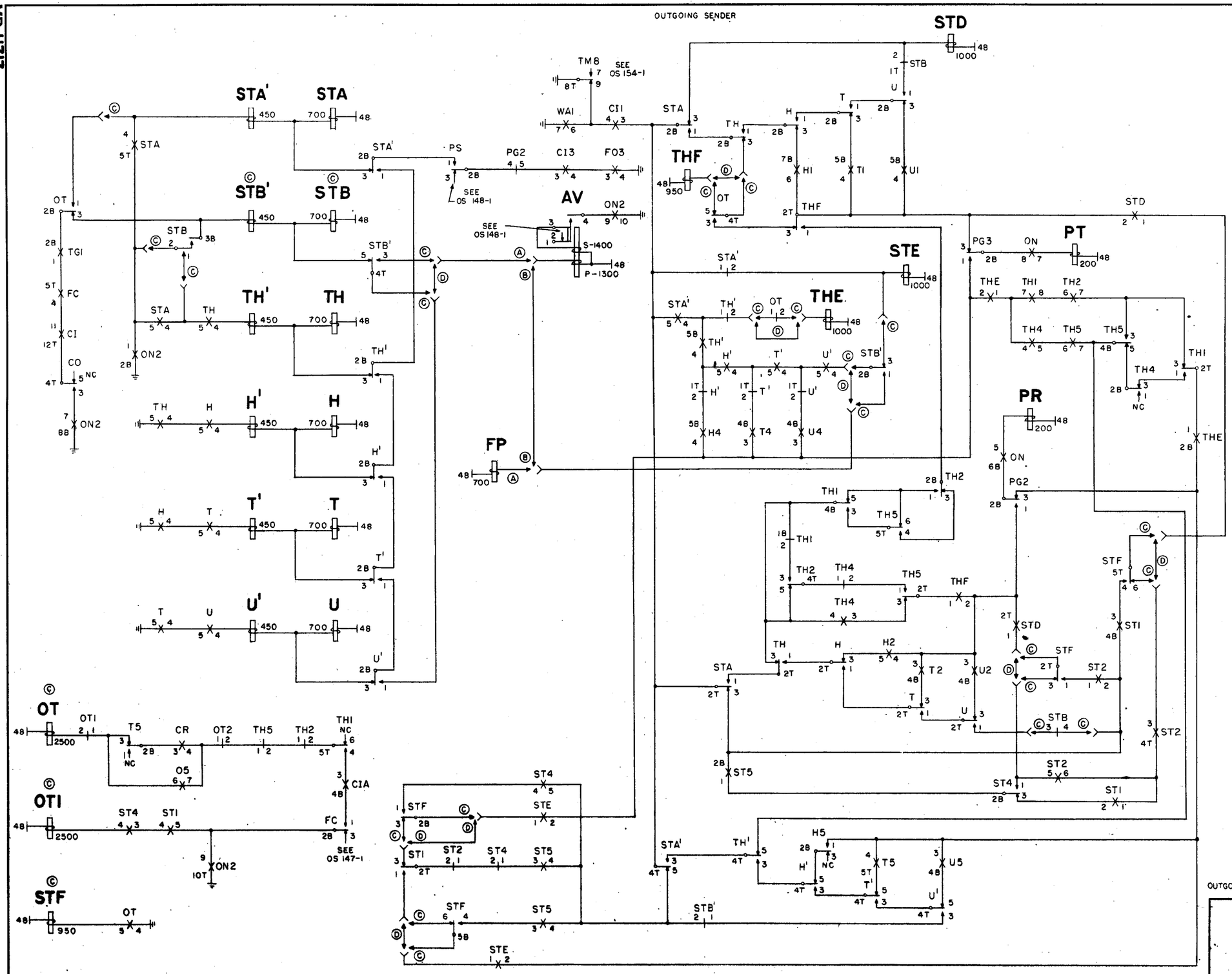

NOTES:

1.

OS OPTION	FEATURE OR OPTION	SD OPTION	SD
A	HEAVY FINAL PULSE REQUIRED	X	68018-01
B	FEATURE ABOVE NOT REQUIRED	T	
C	PROVIDED WHEN OFFICE HAS OVER 10,000 LINES	Y	
D	WHEN FEATURE ABOVE IS NOT PROVIDED.	LOOPED WIRING	

2.

DIGIT			PART 1	PART 2	PART 3	PART 4
TH	H-T-U	STA				
0	0	0				
2	1	1	PT			
4	2	W		PR		
6	3	R	PT	PR		
8	4	J			PT	
1	5	M				PR
3	6		PT			PR
5	7			PR		PR
7	8		PT	PR		PR
9	9				PT	PR

3. NC NEXT TO CONTACT MEANS NO CONNECTION ON THAT CONTACT.

4. FOR SEQUENCE CHART SEE OS 150-1.

OUTGOING SENDER CKT. SD-68018-01, ISS. 28

OUTGOING SENDER
PCI PULSING

NO. 4A OR 4M TOLL

OS 151-1

BELL TELEPHONE LABORATORIES, INC.
PRINTED IN U. S. A.
ORDER AS BSP ITEM MP- 11717

MP-11716

ISSUE	DATE	
1	10-19-51	R.E.K. R.B.K.
2	12-18-53	R.B.K. R.E.K.

OUTGOING SENDER

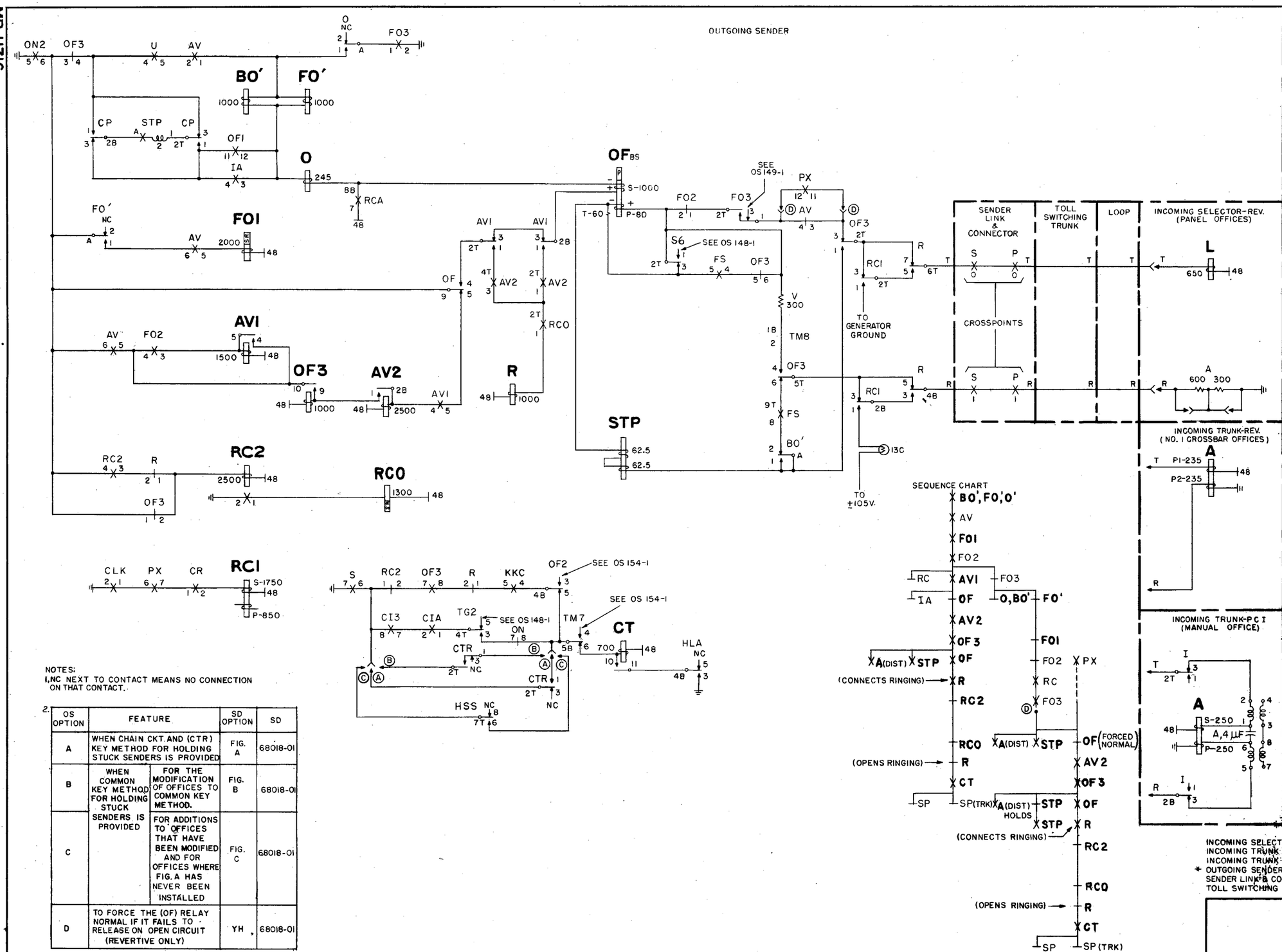

NOTES:
1. NC NEXT TO CONTACT MEANS NO CONNECTION ON THAT CONTACT.
2.

OS OPTION	FEATURE		SD OPTION	SD
A	WHEN CHAIN CKT. AND (CTR) KEY METHOD FOR HOLDING STUCK SENDERS IS PROVIDED		FIG. A	68018-01
B	WHEN COMMON KEY METHOD FOR HOLDING STUCK SENDERS IS PROVIDED	FOR THE MODIFICATION OF OFFICES TO COMMON KEY METHOD.	FIG. B	68018-01
C		FOR ADDITIONS TO OFFICES THAT HAVE BEEN MODIFIED AND FOR OFFICES WHERE FIG. A HAS NEVER BEEN INSTALLED	FIG. C	68018-01
D	TO FORCE THE (OF) RELAY NORMAL IF IT FAILS TO RELEASE ON OPEN CIRCUIT (REVERTIVE ONLY)		YH	68018-01

INCOMING SELECTOR CKT.-REV.	SD-21115-01, ISS.25
INCOMING TRUNK CKT.-PCI	SD-12900-01, ISS.22
INCOMING TRUNK CKT.-REV.	SD-25302-01, ISS.23
* OUTGOING SENDER CKT.	SD-68018-01, ISS.28
SENDER LINK & CONNECTOR CKT.	SD-68334-01, ISS.14
TOLL SWITCHING TRUNK CKT.-(REV/PCI)	SD-68326-01, ISS.10

NO. 4A OR 4M TOLL

OUTGOING SENDER
TRUNK CLOSURE AND CONTROLLED RINGING

OS 152-1

BELL TELEPHONE LABORATORIES, INC.
PRINTED IN U. S. A.
ORDER AS BSP ITEM MP-11716

SEQUENCE CHART

NOTES:

1.

OS OPTION	FEATURE OR OPTION		SD OPTION	SD
A	WHEN 12-TYPE REGISTER IS PROVIDED			68060-01
B	WHEN 14-TYPE REGISTER IS PROVIDED			68412-01
C	WHEN CHAIN CKT. & CTR KEY METHOD FOR HOLDING STUCK SENDERS IS PROVIDED		FIG. A	68018-01
D	WHEN COMMON KEY METHOD FOR HOLDING STUCK SENDERS IS PROVIDED	FOR OFFICES THAT HAVE BEEN MODIFIED TO COMMON KEY METHOD	FIG. B	
E		FOR ADDITIONS TO OFFICES THAT HAVE BEEN MODIFIED TO COMMON KEY METHOD AND FOR OFFICES WHERE CHAIN CKT. AND CTR KEY METHOD (FIG. A) HAS NEVER BEEN INSTALLED	FIG. C	
F	TO FORCE OF RELAY NORMAL IF IT FAILS TO RELEASE ON OPEN CIRCUIT. (REVERTIVE ONLY)		YH	

2. OVERFLOW IS AN ALL-TRUNKS-BUSY CONDITION. TELLTALE IS A TROUBLE CONDITION, EITHER OF THESE CAN OCCUR AT ANY TIME DURING COURSE OF SELECTIONS, CAUSING OF RELAY TO OPERATE.

3. CALL IS CONTROLLED BY INCOMING SENDER UNTIL KKC RELAY OPERATES. IF THE INCOMING SENDER RELEASES, OR THE TRUNK IS RELEASED WHEN LINKS ARE NOT AVAILABLE, THE CALL IS WIPED OUT.

4. RELEASE OF ON RELAY RELEASES PT & PR RELAYS, CAUSING ALL FURTHER DIGITS TO BE OUTPULSED AS ZEROS.

5. RELEASE OF ON RELAY OPENS COUNTING RELAY CIRCUIT; NEXT SELECTION GOES TO TELLTALE.

6. PARTIAL DIGITS IS RECOGNIZED BY REGISTRATION OF PREMATURE START SIGNAL.

7. NC NEXT TO CONTACT MEANS NO CONNECTION ON THAT CONTACT.

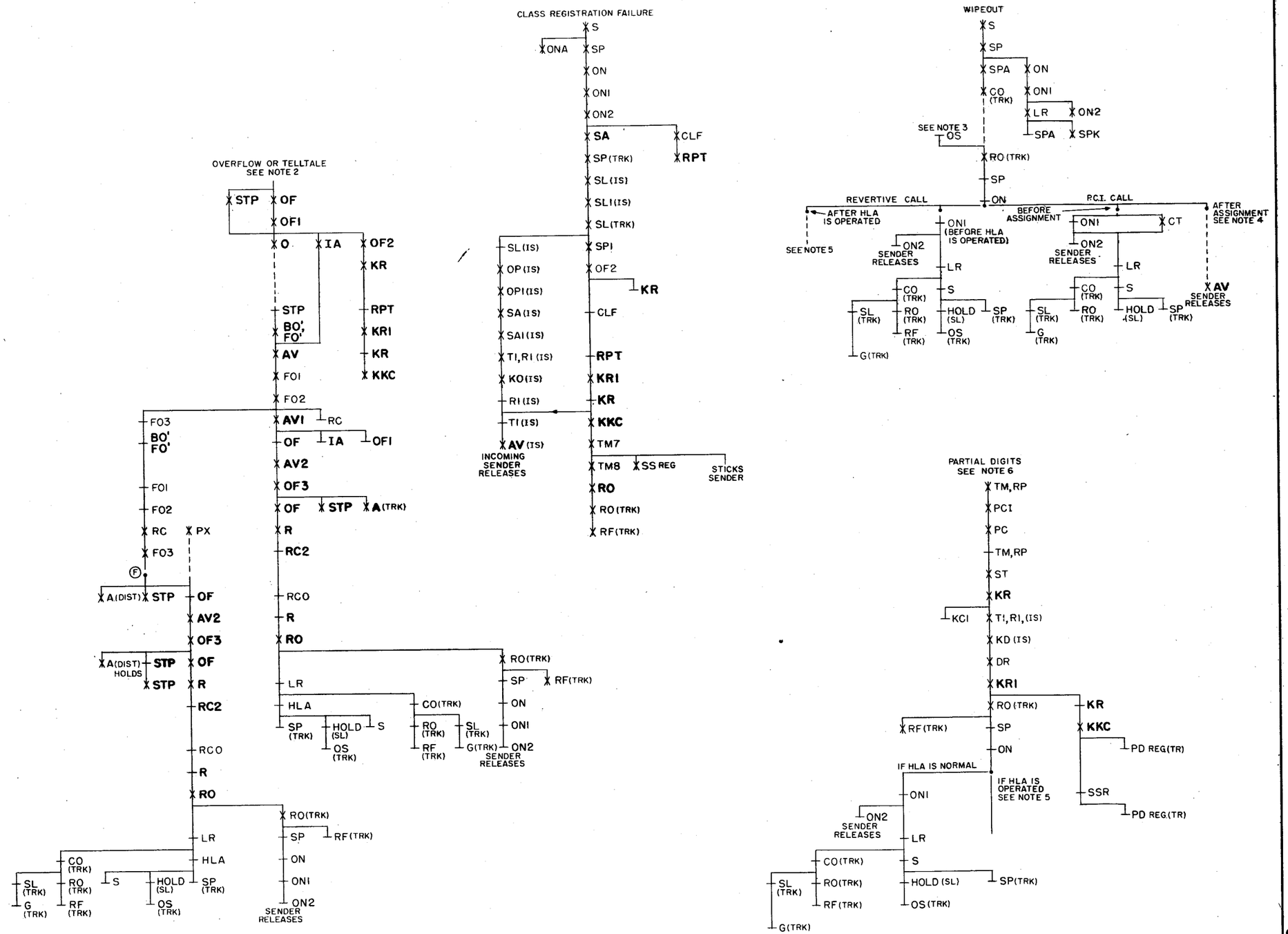

INCOMING SELECTOR CKT. REV.	SD-21115-01, ISS. 25
INCOMING TRUNK CKT. REV.	SD-25302-01, ISS. 23
* OUTGOING SENDER CKT.	SD-68018-01, ISS. 28
SENDER LINK & CONNECTOR CKT.	SD-68334-01, ISS. 14
TRAFFIC REGISTER CKT.	SD-68060-01, ISS. 28
TRAFFIC REGISTER CKT.	SD-68412-01, ISS. 7
TOLL SWITCHING TRUNK CKT.	SD-68326-01, ISS. 10

OUTGOING SENDER

OVERFLOW, TELLTALE AND WIPEOUT

OS 153-1 — 2 SHEETS, SHEET 1

NO. 4A OR 4M TOLL

ORDER AS BSP ITEM MP-11720

BELL TELEPHONE LABORATORIES, INC

PRINTED IN U.S.A.

MP-11720 — 2 SHEETS, SHEET 1

ISSUE	2	K.E.C.
DATE		12-29-65

MP-11720

2 SHEETS, SHEET 2

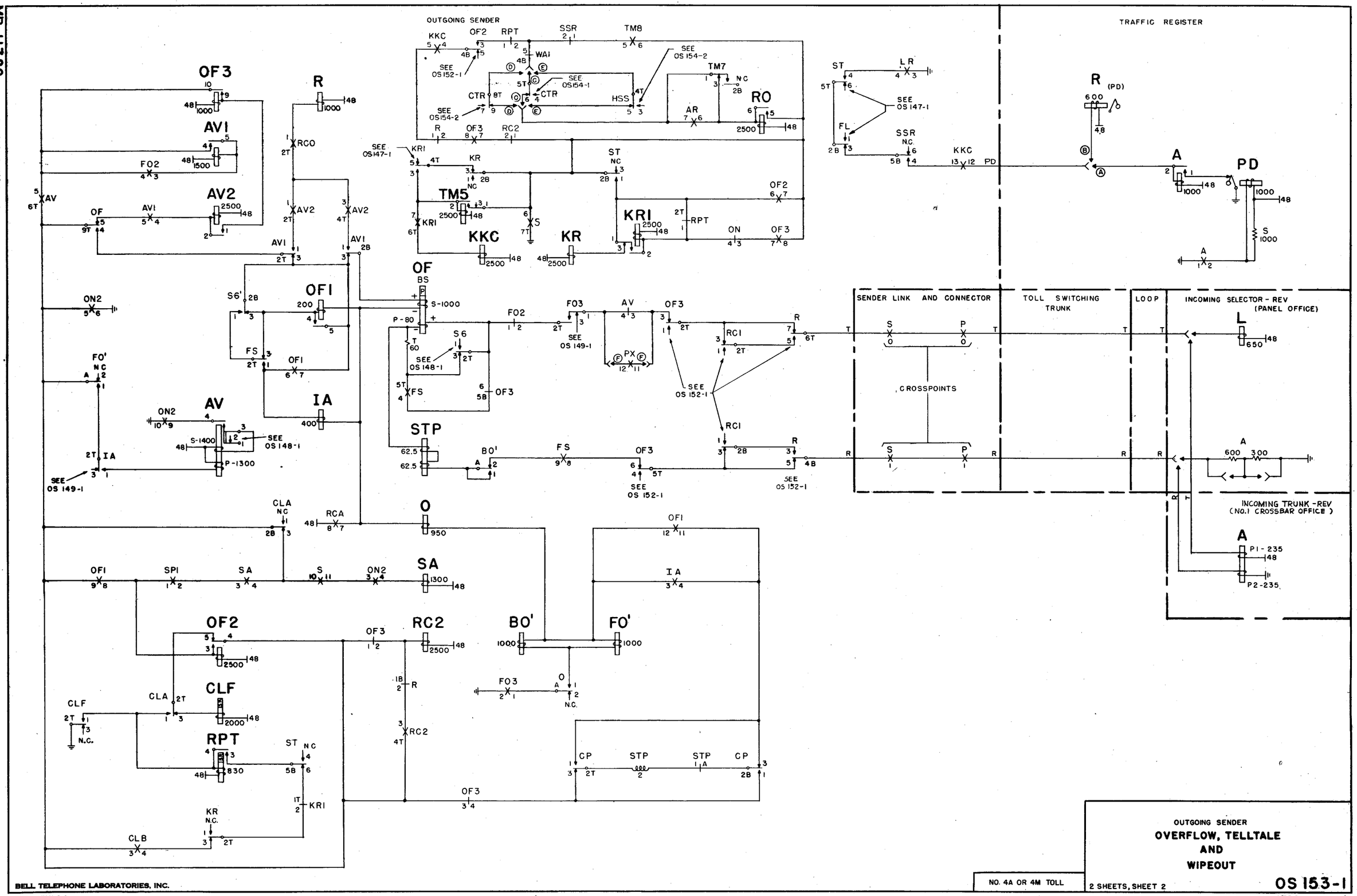

OUTGOING SENDER

OVERFLOW, TELLTALE AND WIPEOUT

NO. 4A OR 4M TOLL

2 SHEETS, SHEET 2

OS 153-1

BELL TELEPHONE LABORATORIES, INC.

PRINTED IN U. S. A.

ORDER AS BSP ITEM MP- 11720

SEQUENCE CHART

NOTES:

1.

OS OPTION	FEATURE OR OPTION	SD OPTION	SD
ZL	TO CAUSE REORDER AND PARTIAL DIGITS REGISTRATION IF START SIGNAL IS RECEIVED PREMATURELY WHEN PCI IS PROVIDED	ZL	68018-01
ZM	TO CAUSE REORDER AND PARTIAL DIGITS REGISTRATION IF START SIGNAL IS RECEIVED IN UNITS POSITION WHEN PCI IS NOT PROVIDED	ZM	
	WHEN CHAIN CKT AND (CTR) KEY METHOD FOR HOLDING STUCK SENDERS IS PROVIDED	FIG. A	

2. IF SENDER DOES NOT RELEASE WITHIN 10 SECONDS OPERATION OF TM8 RELAY WILL OPERATE THE STUCK SENDER REGISTER AND ALARM.
3. AVAILABLE CIRCUIT FOR CH RELAY, CTR KEY NORMAL.
4. NO AVAILABLE CIRCUIT FOR CH RELAY, CTR KEY OPERATED.
5. NO AVAILABLE CIRCUIT FOR CH RELAY, CTR KEY NORMAL.
6. SENDER FORCES NEXT SELECTION TO TELLTALE (OS 153-1) AND ATTEMPTS TO RELEASE. IF NO RELEASE IN 10 SECONDS, OPERATION OF TM8 RELAY MAKES A SECOND ATTEMPT FOR REORDER AND RELEASE.
7. NC NEXT TO CONTACT MEANS NO CONNECTION ON THAT CONTACT.

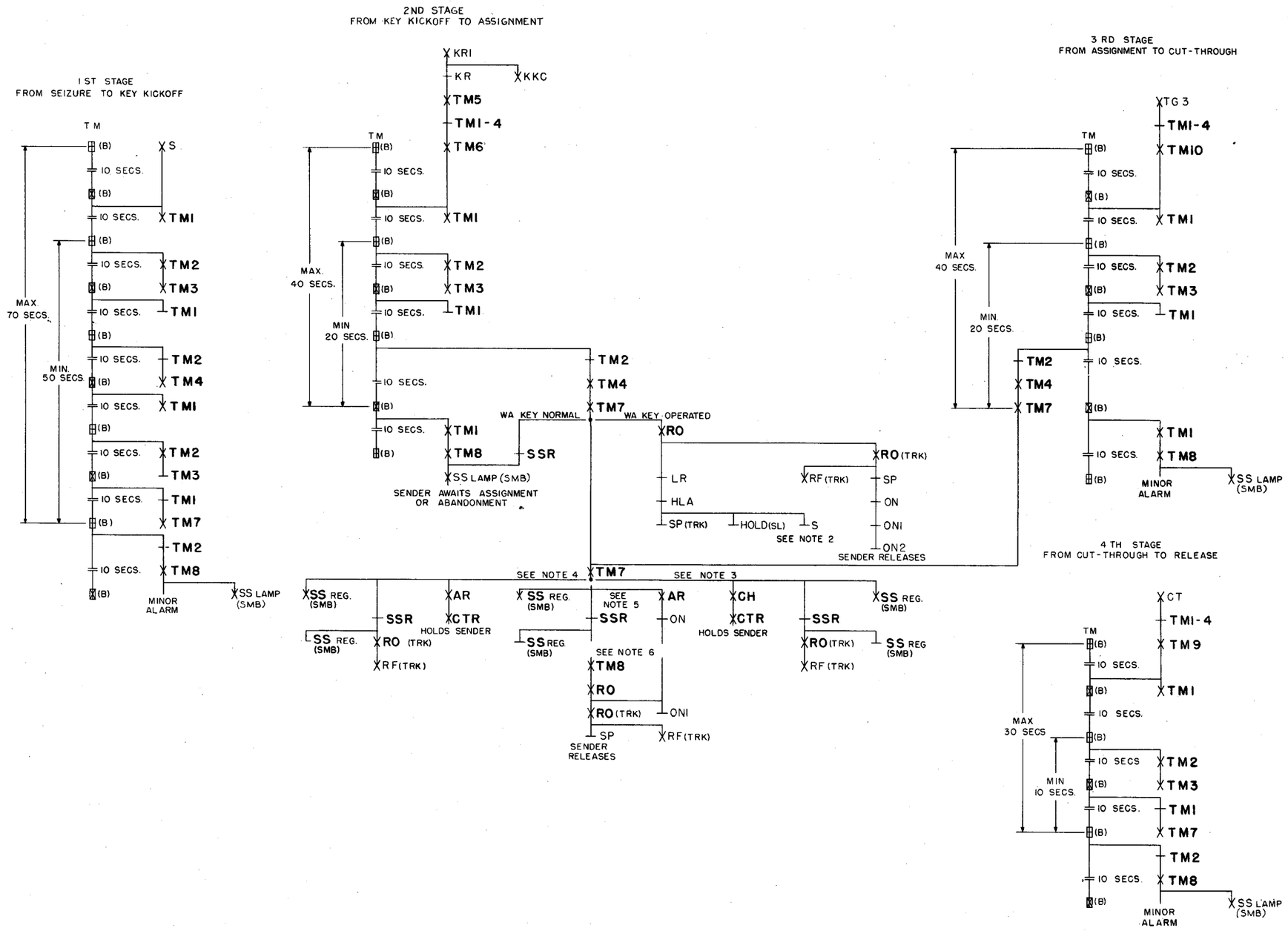

INTERRUPTER FRAME CKT.	SD-68058-01, ISS. 20
MISC. CKT. SENDER MAKE-BUSY FR.	SD-68386-01, ISS. 5
*OUTGOING SENDER CKT.	SD-68018-01, ISS. 28
SENDER LINK & CONNECTOR CKT.	SD-68334-01, ISS. 14
TOLL SWITCHING TRUNK CKT. - REV. OR PCI	SD-68326-01, ISS. 10

OUTGOING SENDER

OVER-ALL TIMING

WITH CHAIN CKT. AND CTR KEY METHOD FOR HOLDING STUCK SENDERS

OS 154-1 — 2 SHEETS, SHEET 1

NO. 4A TOLL

ORDER AS BSP ITEM MP-11719

ISSUE	1	A.S.M. & B.B.	2	J.B.K. & E.C.
DATE	10-22-51		12-16-53	

2 SHEETS, SHEET 1

MP-11719

BELL TELEPHONE LABORATORIES, INC.

PRINTED IN U. S. A.

MP-11719

2 SHEETS, SHEET 2

ISSUE		
1	A.E.B.	
2	J.G.K.	

DATE
10-22-51
12-19-53

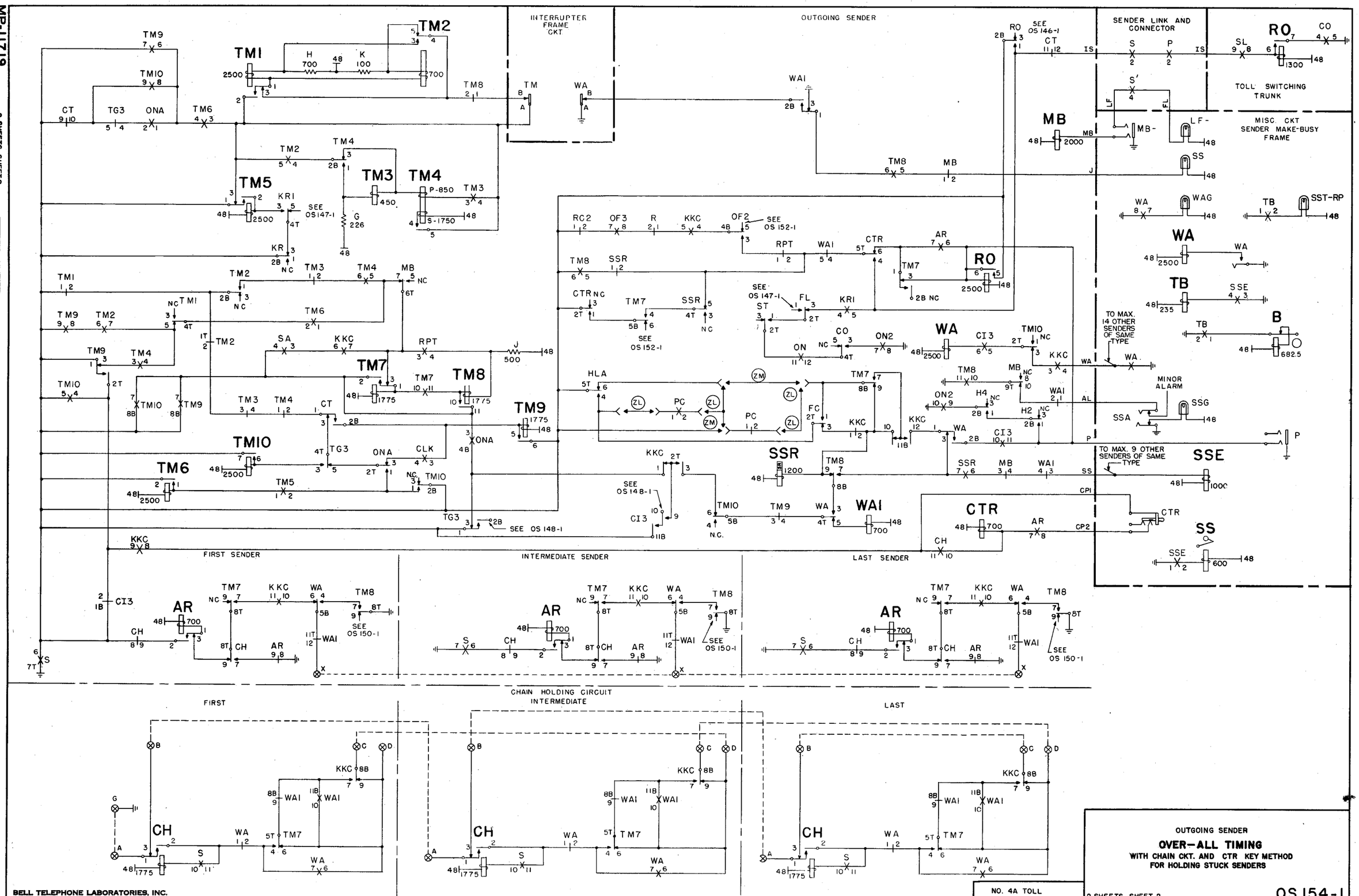

OUTGOING SENDER

OVER-ALL TIMING

WITH CHAIN CKT. AND CTR KEY METHOD FOR HOLDING STUCK SENDERS

NO. 4A TOLL

2 SHEETS, SHEET 2

OS 154-1

BELL TELEPHONE LABORATORIES, INC.

PRINTED IN U. S. A.

ORDER AS BSP ITEM MP-11719

NOTES:

1.

OS OPTION	FEATURE OR OPTION	SD OPTION	SD
A	FOR OFFICES THAT HAVE BEEN MODIFIED TO COMMON KEY METHOD FOR HOLDING STUCK SENDERS.	FIG. B	68018-01
B	FOR ADDITIONS TO OFFICES THAT HAVE BEEN MODIFIED TO COMMON KEY METHOD AND FOR OFFICES WHERE CHAIN CKT. AND (CTR) KEY METHOD (FIG. A) HAS NEVER BEEN INSTALLED	FIG. C	
ZL	TO CAUSE REORDER AND PARTIAL DIGITS REGISTRATION IF START SIGNAL IS RECEIVED PREMATURELY WHEN PCI IS PROVIDED.	ZL	
ZM	TO CAUSE REORDER AND PARTIAL DIGITS REGISTRATION IF START SIGNAL IS RECEIVED IN UNITS POSITION WHEN PCI IS NOT PROVIDED	ZM	

2. IF SENDER DOES NOT RELEASE WITHIN 10 SECONDS OPERATION OF TM8 RELAY WILL OPERATE THE STUCK SENDER REGISTER AND ALARM.
3. SENDER FORCES NEXT SELECTION TO TELLTALE (OS 153-1) AND ATTEMPTS TO RELEASE. IF NO RELEASE IN 10 SECONDS OPERATION OF TM8 RELAY MAKES A SECOND ATTEMPT FOR REORDER AND RELEASE.
4. "N" SENDER MAY BE THE 2ND, 3RD, 4TH, 5TH, 7TH OR 10TH SENDER TO STICK. THIS CHOICE IS MADE BY MEANS OF STRAPPING WHICH CHANGES THE BIAS OF THE (CHS) RELAY.
5. NC NEXT TO CONTACT MEANS NO CONNECTION ON THAT CONTACT.

SEQUENCE CHART

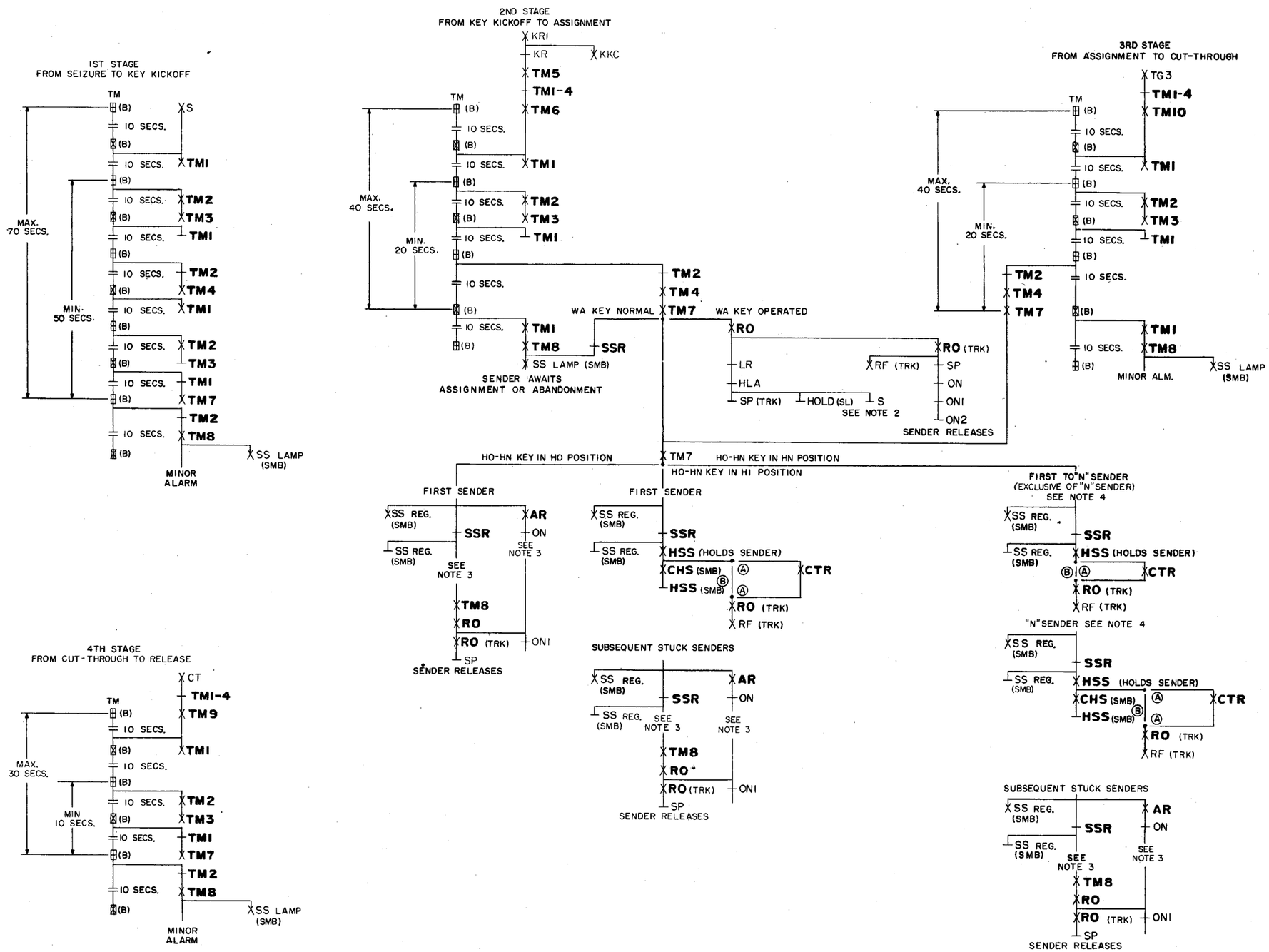

INTERRUPTER FRAME CKT.	SD-68058-01	ISS. 20
MISC. CKT. SENDER MAKE BUSY FR. (4A)	SD-68386-01,	ISS. 5
MISC. CKT. SENDER MAKE BUSY FR. (4M)	SD-68144-01,	ISS. 16
OUTGOING SENDER CKT.	SD-68018-01,	ISS. 28
SENDER LINK & CONNECTOR CKT.	SD-68334-01,	ISS. 14
TOLL SWITCHING TRUNK CKT. - REV. OR PCI	SD-68326-01,	ISS. 10

OUTGOING SENDER
OVER-ALL TIMING
WITH COMMON KEY METHOD
FOR HOLDING STUCK SENDERS

OS 154-2 2 SHEETS, SHEET 1

NO. 4A OR 4M TOLL

ORDER AS BSP ITEM MP-10852

ISSUE	1	J.B.K. R.E.C.
DATE		1-6-54

2 SHEETS, SHEET 1

MP-10852

BELL TELEPHONE LABORATORIES, INC

PRINTED IN U.S.A.

MP-10852

2 SHEETS, SHEET 2

ISSUE	DATE
1	1-9-64

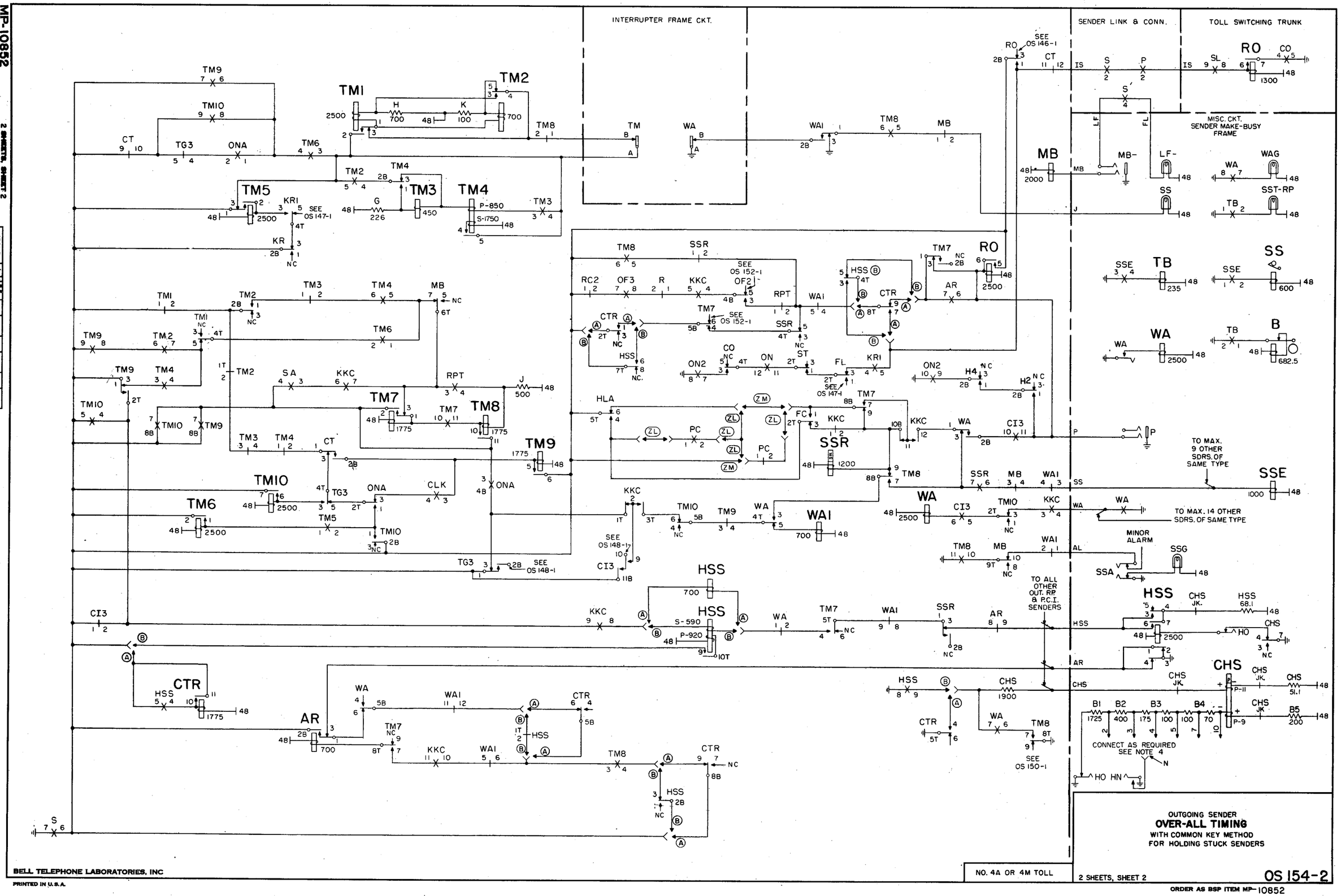

OUTGOING SENDER
OVER-ALL TIMING
WITH COMMON KEY METHOD
FOR HOLDING STUCK SENDERS

2 SHEETS, SHEET 2

OS 154-2

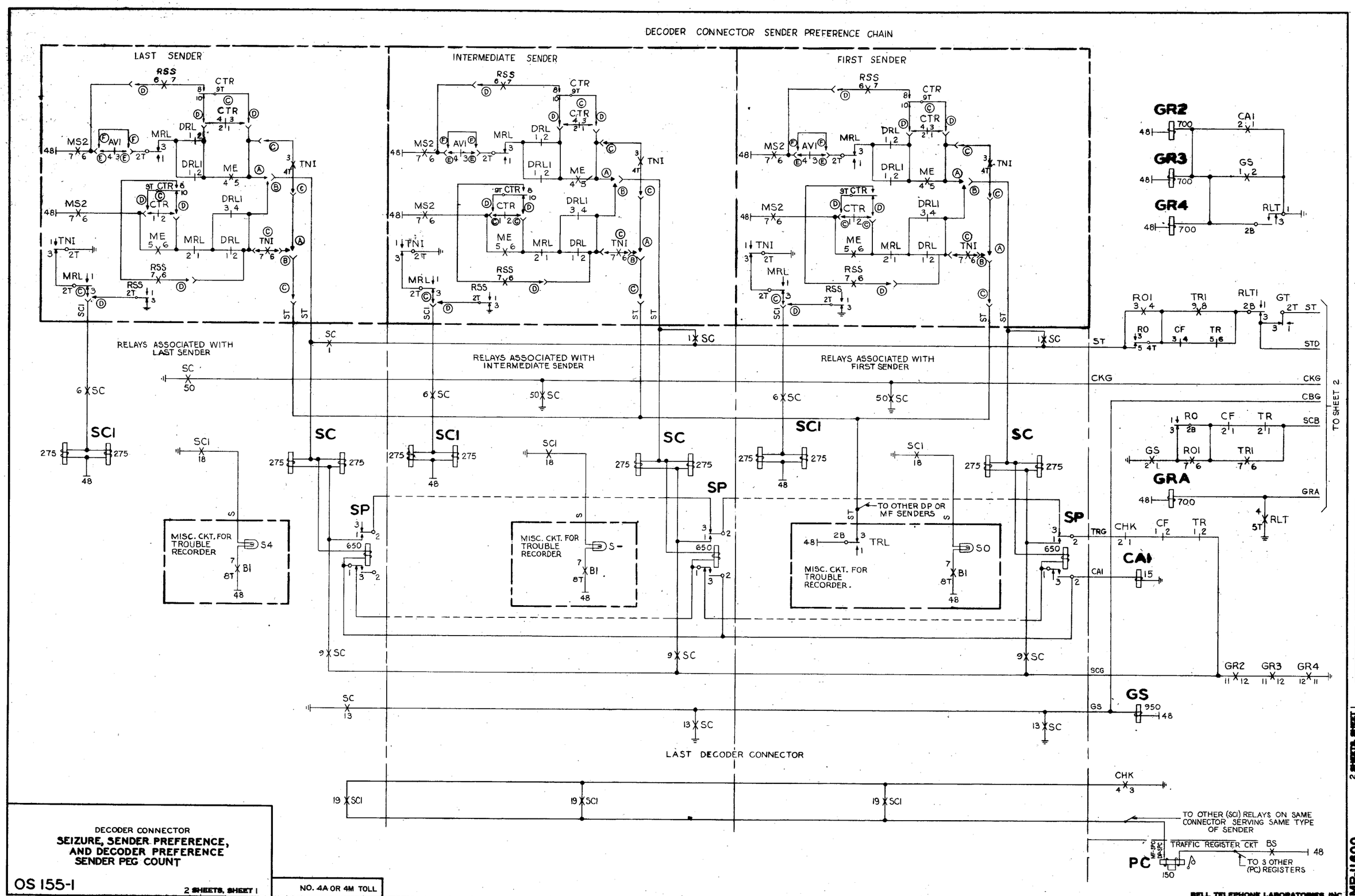
DECODER CONNECTOR SENDER PREFERENCE CHAIN
LAST SENDER
INTERMEDIATE SENDER
FIRST SENDER
RELAYS ASSOCIATED WITH LAST SENDER
RELAYS ASSOCIATED WITH INTERMEDIATE SENDER
RELAYS ASSOCIATED WITH FIRST SENDER
MISC. CKT. FOR TROUBLE RECORDER
TO OTHER DP OR MF SENDERS
LAST DECODER CONNECTOR
TO OTHER (SCI) RELAYS ON SAME CONNECTOR SERVING SAME TYPE OF SENDER
TRAFFIC REGISTER CKT
TO 3 OTHER (PC) REGISTERS
TO SHEET 2
GR2
GR3
GR4
GRA
CAI
GS
PC
SCI
SC
SP
CKG
CBG
SCB
SCG
GRA
TRG
CHK
ST
STD
GS
DECODER CONNECTOR
SEIZURE, SENDER PREFERENCE, AND DECODER PREFERENCE SENDER PEG COUNT
OS 155-1
2 SHEETS, SHEET 1
NO. 4A OR 4M TOLL
ORDER AS BSP ITEM MP-11600
BELL TELEPHONE LABORATORIES, INC.
PRINTED IN U.S.A.
MP-11600
2 SHEETS, SHEET 1

MP-11600

2 SHEETS, SHEET 2

ISSUE	DATE
1	6-25-71
2	5-22-73
3	10-14-75

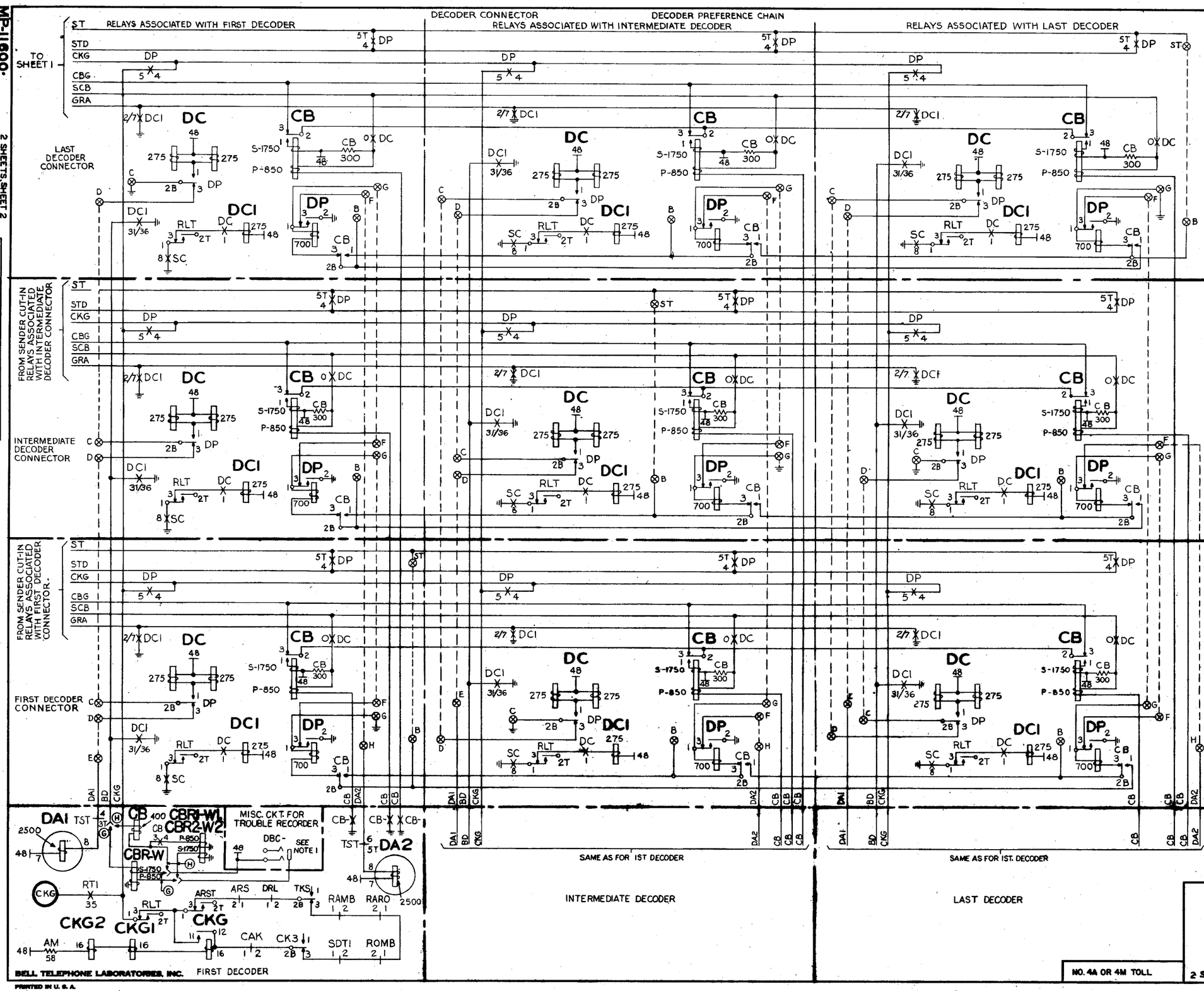

SEQUENCE CHART

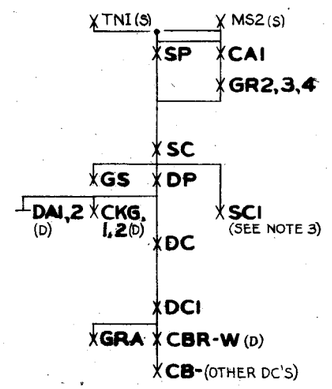

NOTES:

1. A JACK IS ASSOCIATED WITH EACH CBR-W RELAY. (SEE OS 179-1)

2.

OS OPTION	FEATURE OR OPTION		SD OPTION	SD
A	WHEN DP INCOMING SENDER IS USED.		NONE	68221-01
B	WHEN MF INCOMING SENDER IS USED.		NONE	68222-01
C	RECORD STUCK SENDERS	NOT PROVIDED	FIG. 4	68221-01 OR 68222-01
D		PROVIDED	FIG. 22	68221-01
			FIG. 20	68222-01
E	MFR. DISC.		YY	68221-01
F	STANDARD		YZ	68221-01
G	MFR. DISC.		FIG. 19	68340-01
H	STANDARD		FIGS. 25, 26 & 27	

3. SCI DOES NOT OPERATE ON TNI CARDS.

TRAFFIC REGISTER CKT.	SD-68412-01,	ISS. 7
DECODER CKT.	SD-68340-01,	ISS. 8
*DECODER CONNECTOR CKT.	SD-68339-01,	ISS. 6
DECODER-MARKER TEST AND TROUBLE RECORDER FRAME CKT.	SD-68389-01,	ISS. 5
INCOMING SENDER CKT. DP-4A	SD-68221-01,	ISS. 18
INCOMING SENDER CKT. DP-4M	SD-68423-01,	ISS. 2
INCOMING SENDER CKT. MF-4A	SD-68222-01,	ISS. 17
INCOMING SENDER CKT. MF-4M	SD-68424-01,	ISS. 2
MARKER CKT.	SD-68388-01,	ISS. 8
MISC. CKT. FOR TROUBLE RCDR.	SD-68392-01,	ISS. 5

NO. 4A OR 4M TOLL

DECODER CONNECTOR
SEIZURE, SENDER PREFERENCE, AND DECODER PREFERENCE SENDER PEG COUNT

2 SHEETS, SHEET 2

OS 155-1

BELL TELEPHONE LABORATORIES, INC.
PRINTED IN U. S. A.
ORDER AS BSP ITEM MP-11600

MP-11601

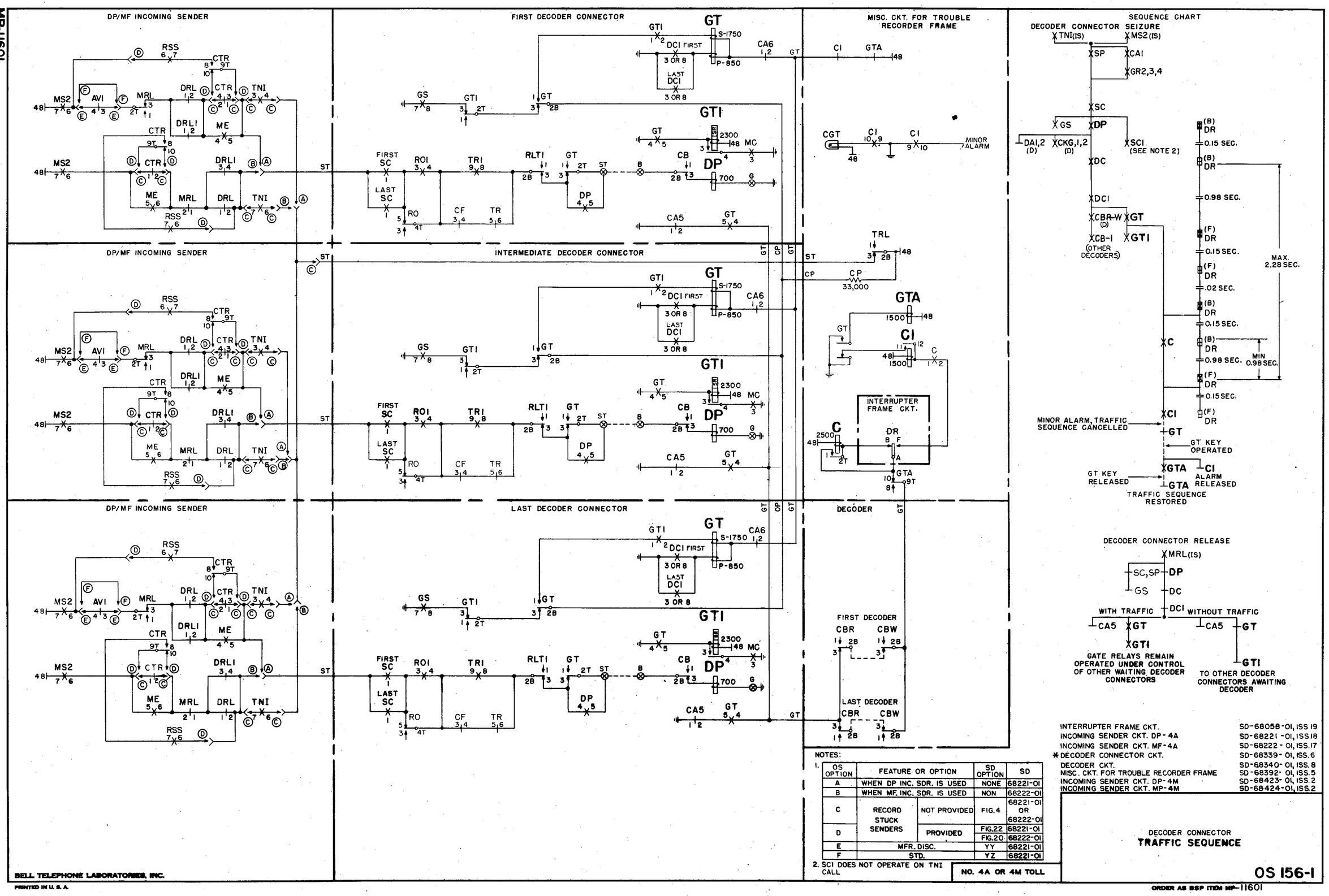

ISSUE	DATE
1	4-30-51
2	7-20-53
3	10-9-55

NOTES:

1.

OS OPTION	FEATURE OR OPTION		SD OPTION	SD
A	WHEN DP INC. SDR. IS USED		NONE	68221-01
B	WHEN MF. INC. SDR. IS USED		NON	68222-01
C	RECORD STUCK SENDERS	NOT PROVIDED	FIG. 4	68221-01 OR 68222-01
D		PROVIDED	FIG. 22	68221-01
			FIG. 20	68222-01
E	MFR. DISC.		YY	68221-01
F	STD.		YZ	68221-01

2. SCI DOES NOT OPERATE ON TNI CALL

NO. 4A OR 4M TOLL

INTERRUPTER FRAME CKT.	SD-68058-01, ISS.19
INCOMING SENDER CKT. DP-4A	SD-68221-01, ISS.18
INCOMING SENDER CKT. MF-4A	SD-68222-01, ISS.17
* DECODER CONNECTOR CKT.	SD-68339-01, ISS.6
DECODER CKT.	SD-68340-01, ISS.8
MISC. CKT. FOR TROUBLE RECORDER FRAME	SD-68392-01, ISS.5
INCOMING SENDER CKT. DP-4M	SD-68423-01, ISS.2
INCOMING SENDER CKT. MP-4M	SD-68424-01, ISS.2

DECODER CONNECTOR
TRAFFIC SEQUENCE

OS 156-1

BELL TELEPHONE LABORATORIES, INC.
PRINTED IN U. S. A.
ORDER AS BSP ITEM MP-11601

MP-11602

ISSUE	DATE
1	5-8-61
2	7-17-63
3	10-9-69

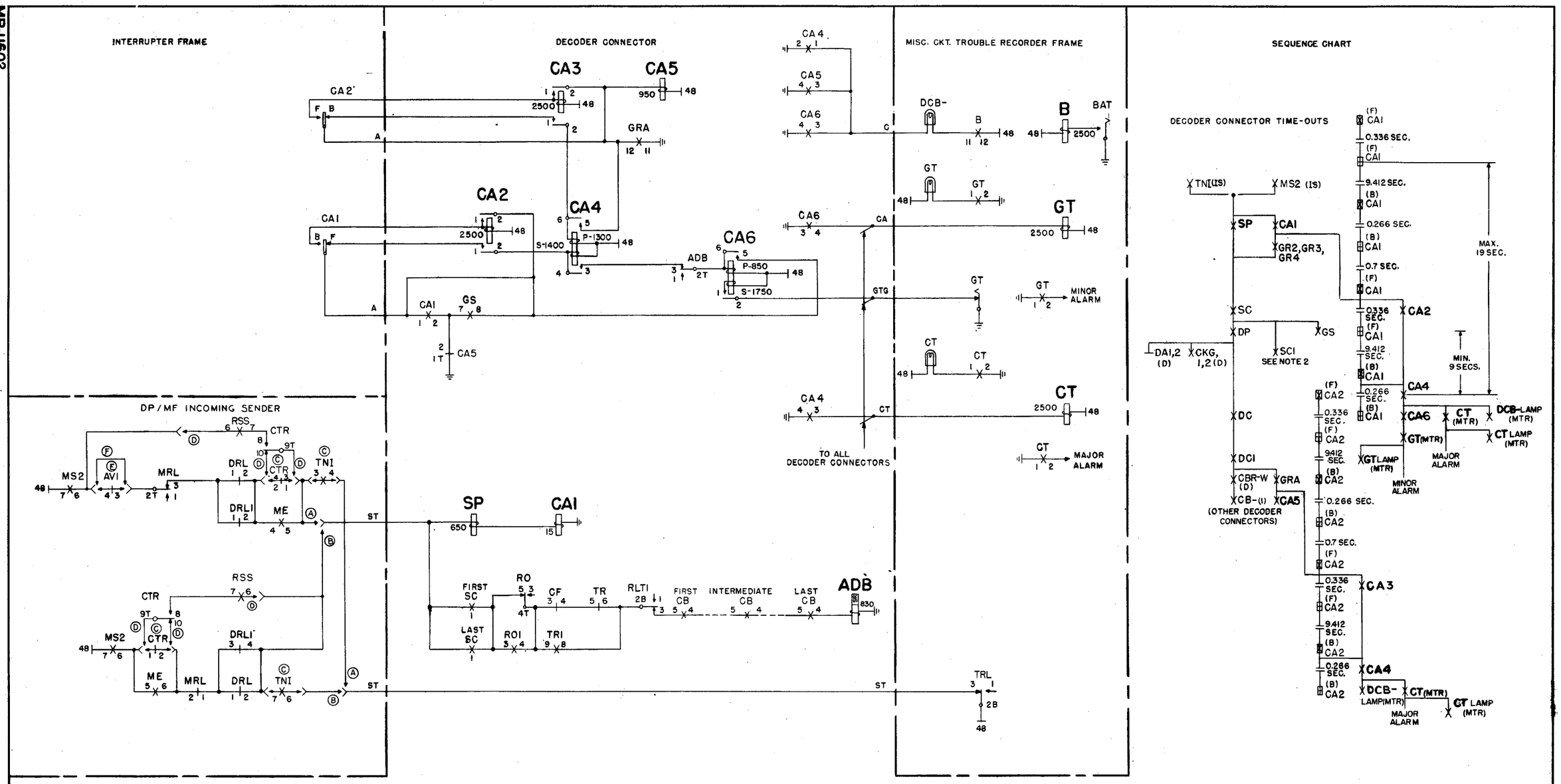

NOTES:

1.

OS OPTION	FEATURE OR OPTION		SD OPTION	SD
A	FOR DP INCOMING SDRS.		NONE	68221-01
B	FOR MF INCOMING SDRS.		NONE	68222-01
C	RECORD STUCK SENDER	NOT PROVIDED	FIG. 4	68221-01 OR 68222-01
D		PROVIDED	FIG. 22	68221-01
			FIG. 20	68222-01
E	M.D.		YY	68221-01
F	S.T.D.		YZ	68221-01

2. SCI DOES NOT OPERATE ON TNI TYPE CALLS.

INTERRUPTER FRAME CKT.	SD-68058-01, ISS. 19
INCOMING SENDER CKT.-DP-4A	SD-68221-01, ISS. 18
INCOMING SENDER CKT.-MF-4A	SD-68222-01, ISS. 17
* DECODER CONNECTOR CKT.	SD-68339-01, ISS. 6
DECODER CKT.	SD-68340-01, ISS. 8
MISC. CKT. FOR TROUBLE RECORDER	SD-68392-01, ISS. 5
INCOMING SENDER CKT.-DP-4M	SD-68423-01, ISS. 2
INCOMING SENDER CKT.-MF-4M	SD-68424-01, ISS. 2

DECODER CONNECTOR
TIME-OUTS

NO. 4A OR 4M TOLL

OS 157-1

BELL TELEPHONE LABORATORIES, INC.
PRINTED IN U. S. A.
ORDER AS BSP ITEM MP-11602

MP-11603

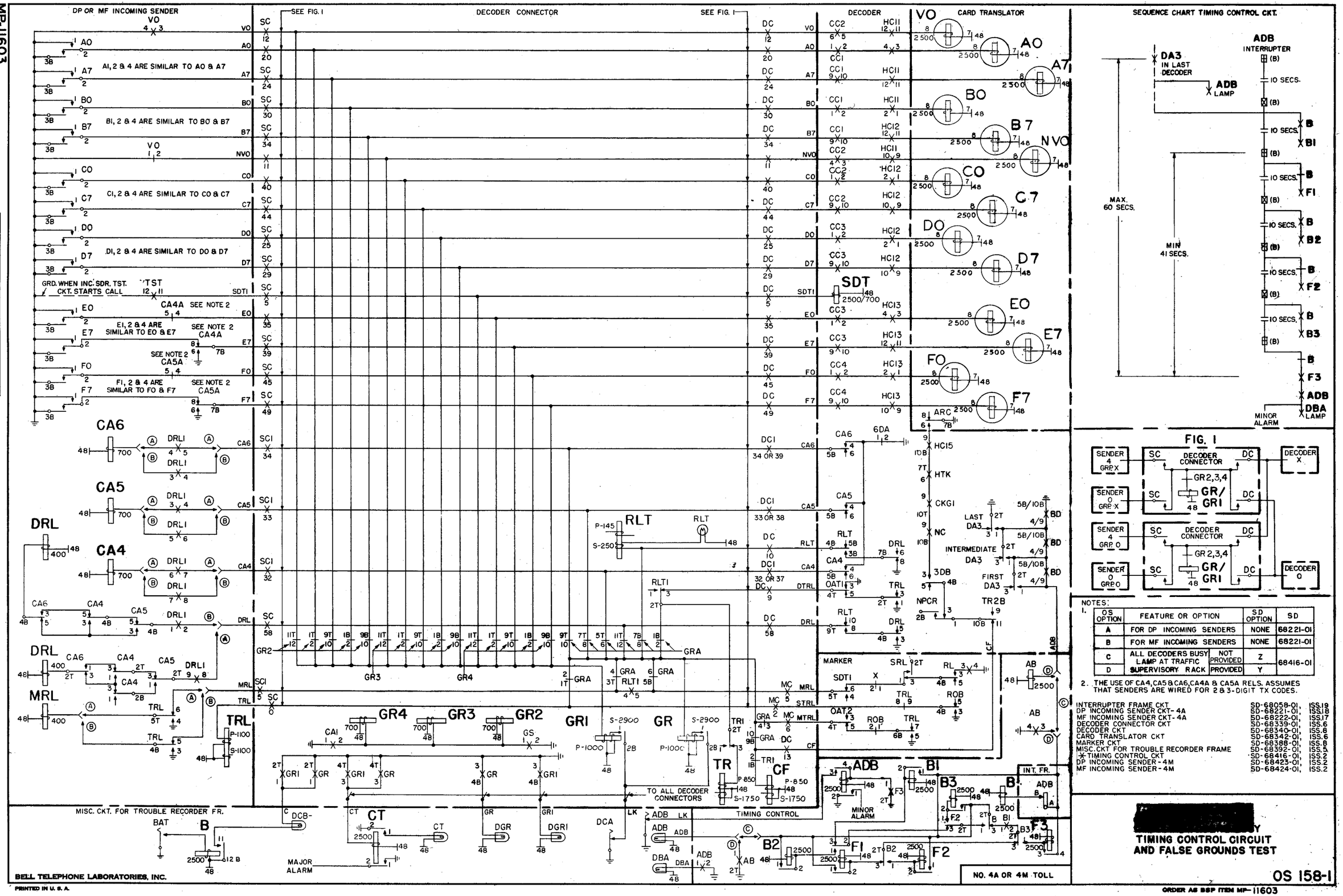

NOTES:

1.

OS OPTION	FEATURE OR OPTION		SD OPTION	SD
A	FOR DP INCOMING SENDERS		NONE	68221-01
B	FOR MF INCOMING SENDERS		NONE	68221-01
C	ALL DECODERS BUSY LAMP AT TRAFFIC SUPERVISORY RACK	NOT PROVIDED	Z	68416-01
D		PROVIDED	Y	

2. THE USE OF CA4, CA5 & CA6, CA4A & CA5A RELS. ASSUMES THAT SENDERS ARE WIRED FOR 2 & 3-DIGIT TX CODES.

INTERRUPTER FRAME CKT	SD-68058-01,	ISS.19
DP INCOMING SENDER CKT-4A	SD-68221-01,	ISS.18
MF INCOMING SENDER CKT-4A	SD-68222-01,	ISS.17
DECODER CONNECTOR CKT	SD-68339-01,	ISS.6
DECODER CKT	SD-68340-01,	ISS.8
CARD TRANSLATOR CKT	SD-68342-01,	ISS.6
MARKER CKT	SD-68388-01,	ISS.8
MISC. CKT FOR TROUBLE RECORDER FRAME	SD-68392-01,	ISS.5
TIMING CONTROL CKT	SD-68416-01,	ISS.2
DP INCOMING SENDER-4M	SD-68423-01,	ISS.2
MF INCOMING SENDER-4M	SD-68424-01,	ISS.2

ISSUE	1	2	3
DATE	7-3-51	7-15-53	10-5-63

[redacted]

TIMING CONTROL CIRCUIT AND FALSE GROUNDS TEST

OS 158-1

BELL TELEPHONE LABORATORIES, INC.

PRINTED IN U. S. A.

ORDER AS BSP ITEM MP-11603

FIG. C
4A, DP/MF SENDER
SEE NOTE 1

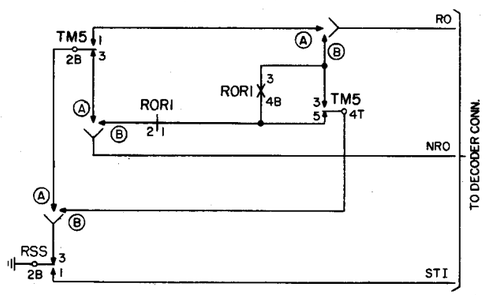

FIG. 2
4M, DP/MF SENDER

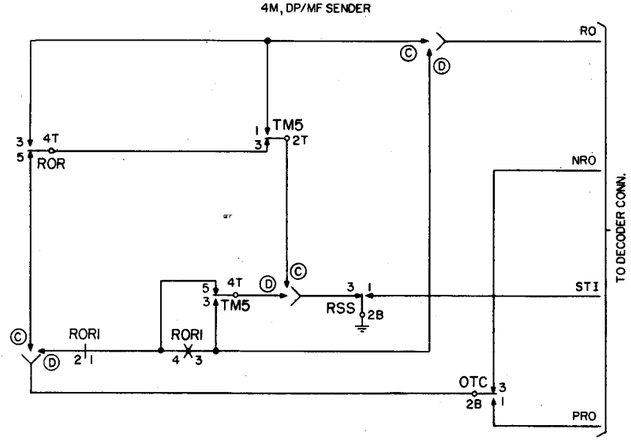

FIG. D
4A, DP/MF SENDER
SEE NOTE 1

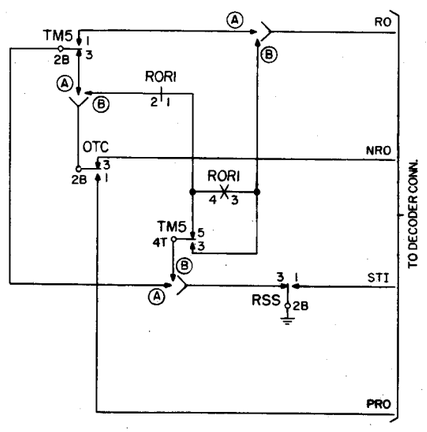

FIG. A
4A, DP/MF SENDER
SEE NOTE 1

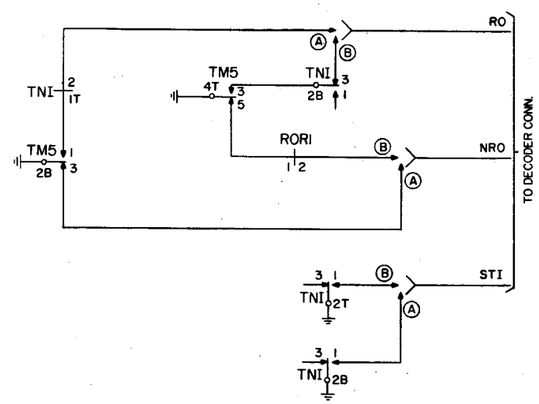

FIG. B
4A, MF/DP SENDER
SEE NOTE 1

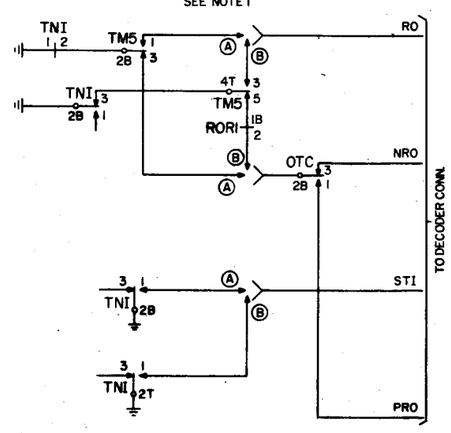

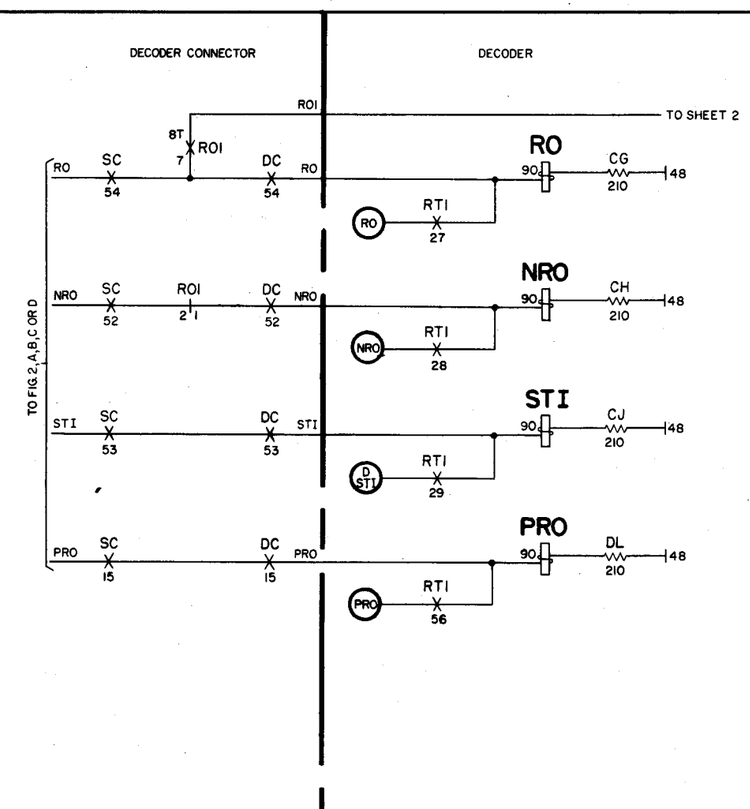

DECODER
SEIZURE AND INTEGRITY CHECK

OS 160-1

2 SHEETS, SHEET 1

NO. 4A OR 4M TOLL

ORDER AS BSP ITEM MP—

ISSUE	2	R.C.C. R.J.C.
DATE		10-1-53

2 SHEETS, SHEET 1

MP-11605

BELL TELEPHONE LABORATORIES, INC

PRINTED IN U. S. A.

MP-11605

2 SHEETS, SHEET 2

ISSUE	DATE	
1	6-25-51	R.S.M.
2	10-1-57	K.F.P.

FIG 1
4A/4M DP/MF INCOMING SENDER

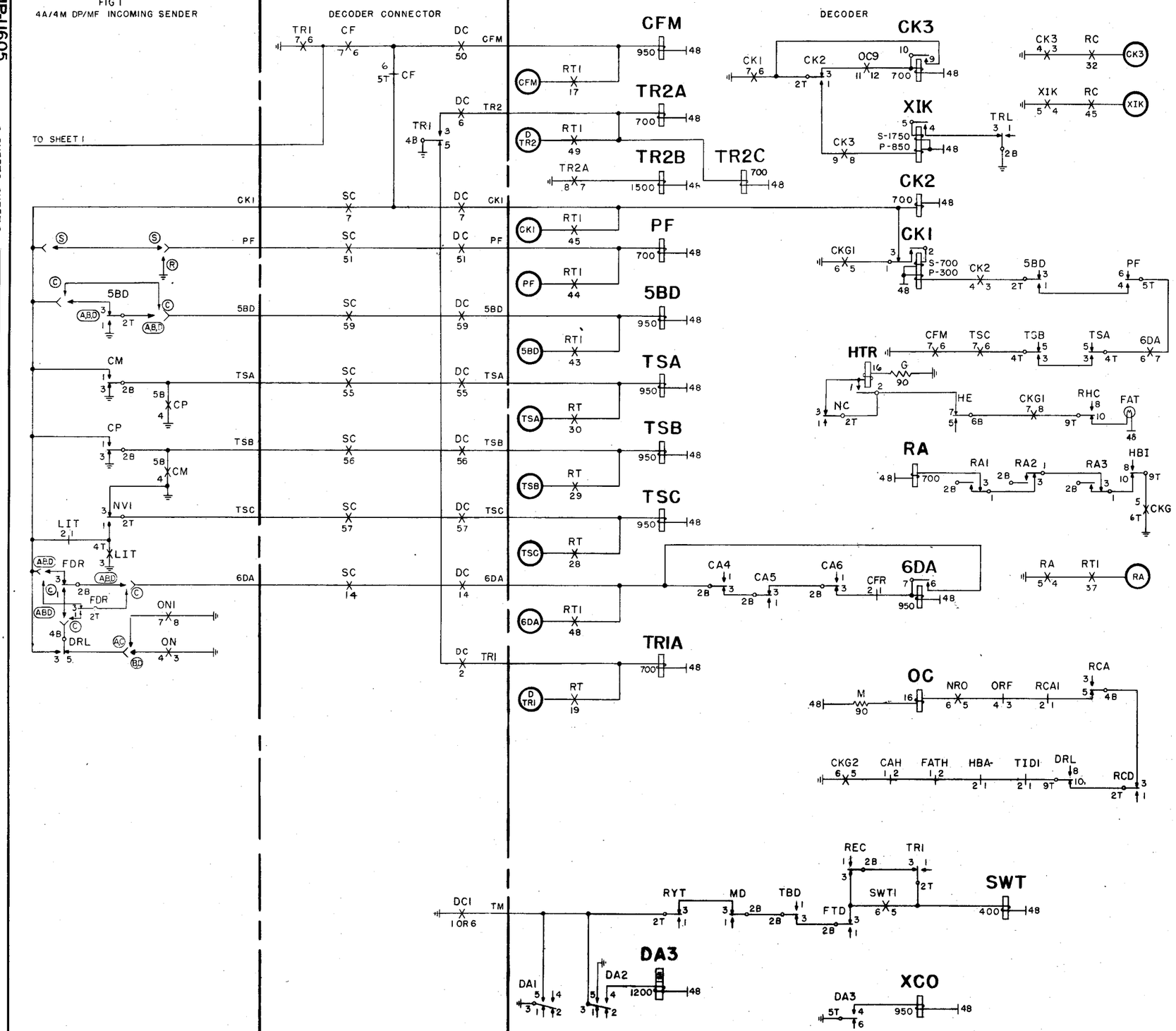

SEQUENCE CHART

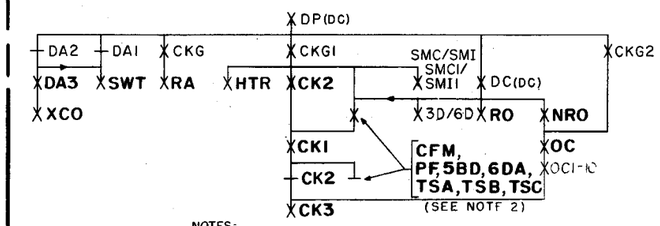

NOTES:

1.

OS OPTION	FEATURE OR OPTION	SD OPTION	SD
A	WHEN 4A DP SENDER IS USED		68221-01
B	WHEN 4A MF SENDER IS USED		68222-01
C	WHEN 4M DP SENDER IS USED		68423-01
D	WHEN 4M MF SENDER IS USED		68424-01
R	TO ALTER CONNECTOR PREFERENCE OF A SDR. GROUP BEGINNING WITH THE FIRST SENDER	R	68221-01 68222-01
		Z	68423-01 68424-01
S	TO ALTER CONNECTOR PREFERENCE OF A SDR. GROUP BEGINNING WITH THE SECOND SENDER	S	68221-01 68222-01
		Y	68423-01 68424-01
FIG A	INTERSENDER LOAD CONTROL TIMING NOT PROVIDED AND CONTROL OF STUCK SENDERS BY CTR KEYS AND CHAIN RELAYS. NO RECORDING OF STUCK SENDERS	Z & FIGS 4, G, J, & L	68221-01 68222-01
FIG B	INTERSENDER LOAD CONTROL TIMING PROVIDED AND CONTROL OF STUCK SENDERS BY CTR KEYS AND CHAIN RELAYS. NO RECORDING OF STUCK SENDERS	Z & FIGS 4, H, J, & M	68221-01 68222-01
FIG C	INTERSENDER LOAD CONTROL TIMING NOT PROVIDED AND CONTROL OF STUCK SENDERS BY COMMON KEY WITH AUTOMATIC RECORDING OF STUCK SENDERS	FIGS 22, G, K & L	68221-01
		FIGS 20, G, K & L	68222-01
FIG D	INTERSENDER LOAD CONTROL TIMING PROVIDED AND CONTROL OF STUCK SENDERS BY COMMON KEY WITH AUTOMATIC RECORDING OF STUCK SENDERS.	FIGS 22 H, K & M	68221-01
		FIGS 20 H, K & M	68222-01

2. THESE RELAYS RELEASE UNLESS GROUNDED BY THE SENDER OR DECODER CONNECTOR.

TRAFFIC SEPARATION INFORMATION

TABLE A

SENDER RELAYS OPERATED		DECODER RELAYS OPERATED	
CM	CP	TSA	TSB
X			X
		X	X
	X	X	

TABLE B

SENDER RELAYS OPERATED		DECODER RELAYS OPERATED
NVI	LIT	TSC
X		
X	X	X
		X

INCOMING SENDER CKT. MP 4M	SD-68424-01	ISS 1
INCOMING SENDER CKT. DP 4M	SD-68423-01	ISS 1
*DECODER CKT.	SD-68340-01	ISS. 8
DECODER CONNECTOR CKT.	SD-68339-01	ISS. 4
INCOMING SENDER CKT. DP 4A	SD-68221-01	ISS. 14
INCOMING SENDER CKT. MF 4A	SD-68222-01	ISS. 16

DECODER
SEIZURE AND INTEGRITY CHECK

NO. 4A OR 4M TOLL

2 SHEETS, SHEET 2

OS 160-2

BELL TELEPHONE LABORATORIES, INC.
PRINTED IN U. S. A.
ORDER AS BSP ITEM MP-11605

CARD TRANSLATOR

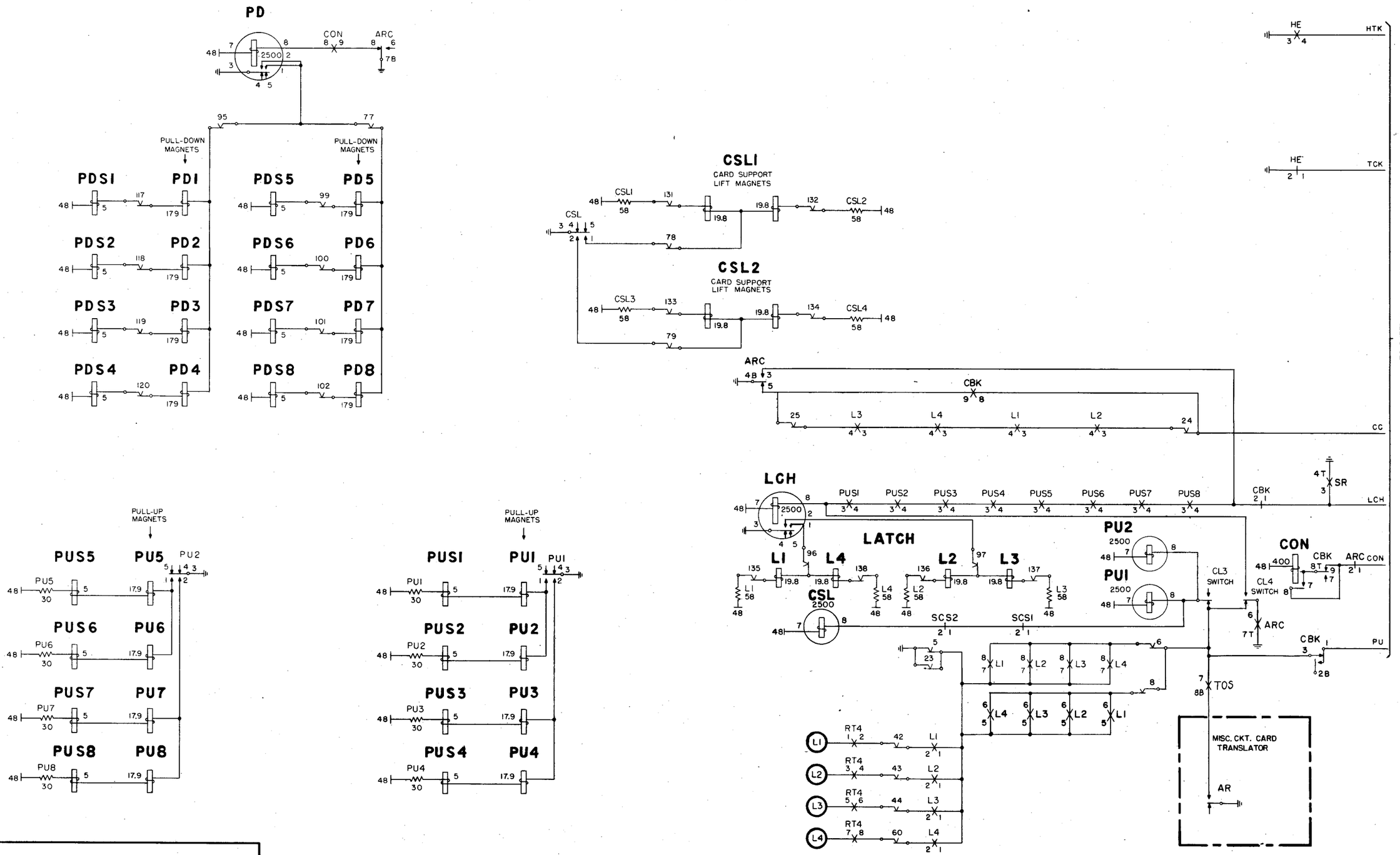

DECODER

CONNECT TO CARD TRANSLATOR

OS161-1

2 SHEETS, SHEET 1

NO. 4A OR 4M TOLL

ORDER AS BSP ITEM MP-11669

ISSUE	1	2
	A.S.W.	H.C.L.
DATE	8-10-51	9-23-53

2 SHEETS, SHEET 1

MP-11669

BELL TELEPHONE LABORATORIES, INC.

PRINTED IN U. S. A.

MP-11669 2 SHEETS, SHEET 2

ISSUE	DATE	
1	6-10-61	A.A.K.
2	9-23-63	W.H.K.

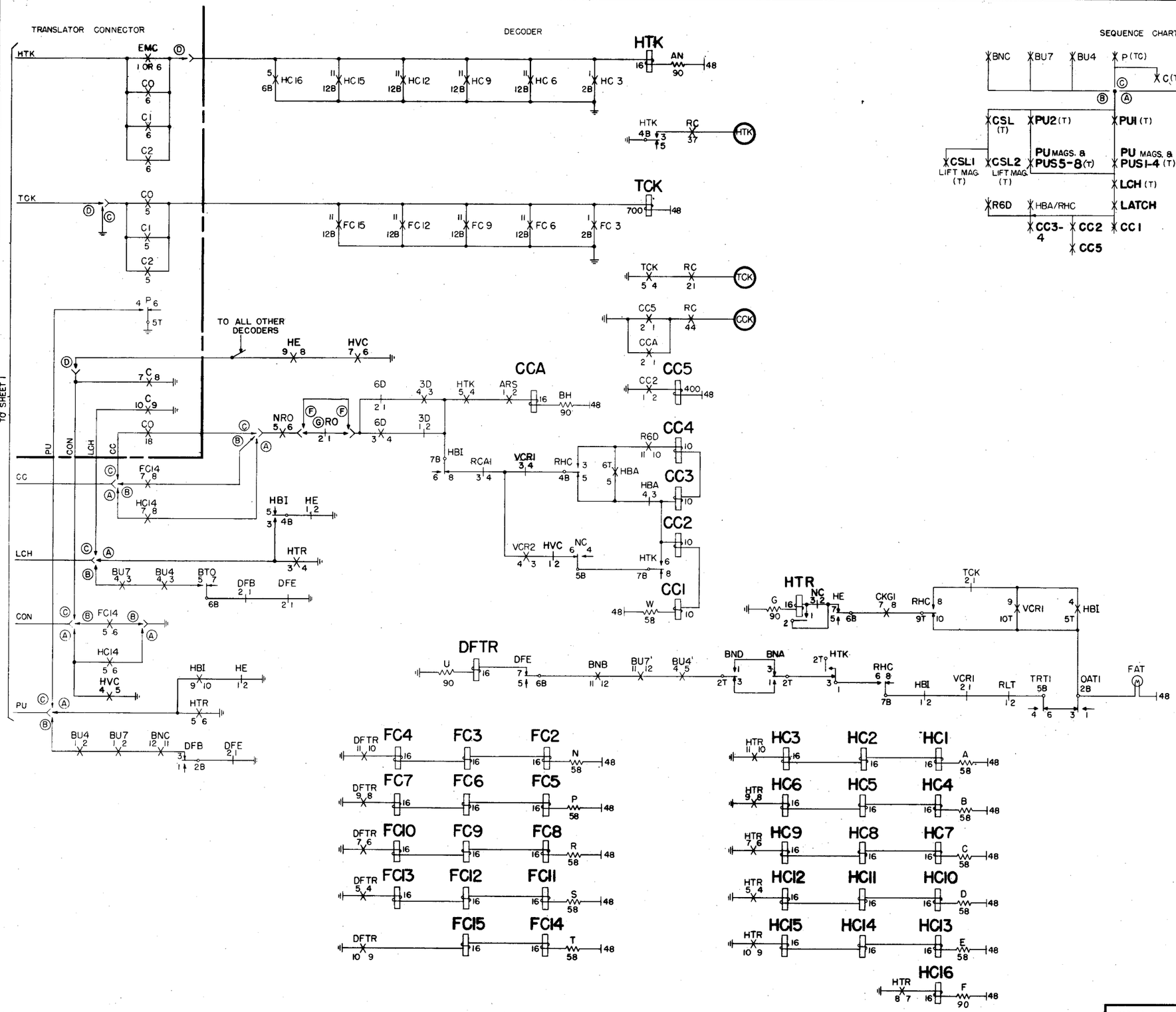

NOTES:
1.

OS OPTION	FEATURE OR OPTION		SD OPTION	SD
A	FOR HOME TRANSLATOR		FIG. 14	68340-01
B	FOR DEC. FOREIGN TRANSLATOR		FIG. 15 & Z WIRING	
C	FOR FOREIGN TRANSLATOR		Z	68341-01
D	FOR EMERGENCY TRANSLATOR		Y Z	68341-01 68342-01
F	PRONOUNCEMENT REORDER	PROVIDED	FIG. H	68340-01
G		NOT PROVIDED	FIG. G	

*DECODER CKT. SD-68340-01, ISS.8
TRANSLATOR CKT. SD-68342-01, ISS.6
TRANSLATOR CONN. CKT. SD-68341-01, ISS.6

DECODER
CONNECT TO CARD TRANSLATOR

NO.4A OR 4M TOLL

2 SHEETS, SHEET 2

OS 161-1

BELL TELEPHONE LABORATORIES, INC.
PRINTED IN U.S.A.
ORDER AS BSP ITEM MP-11669

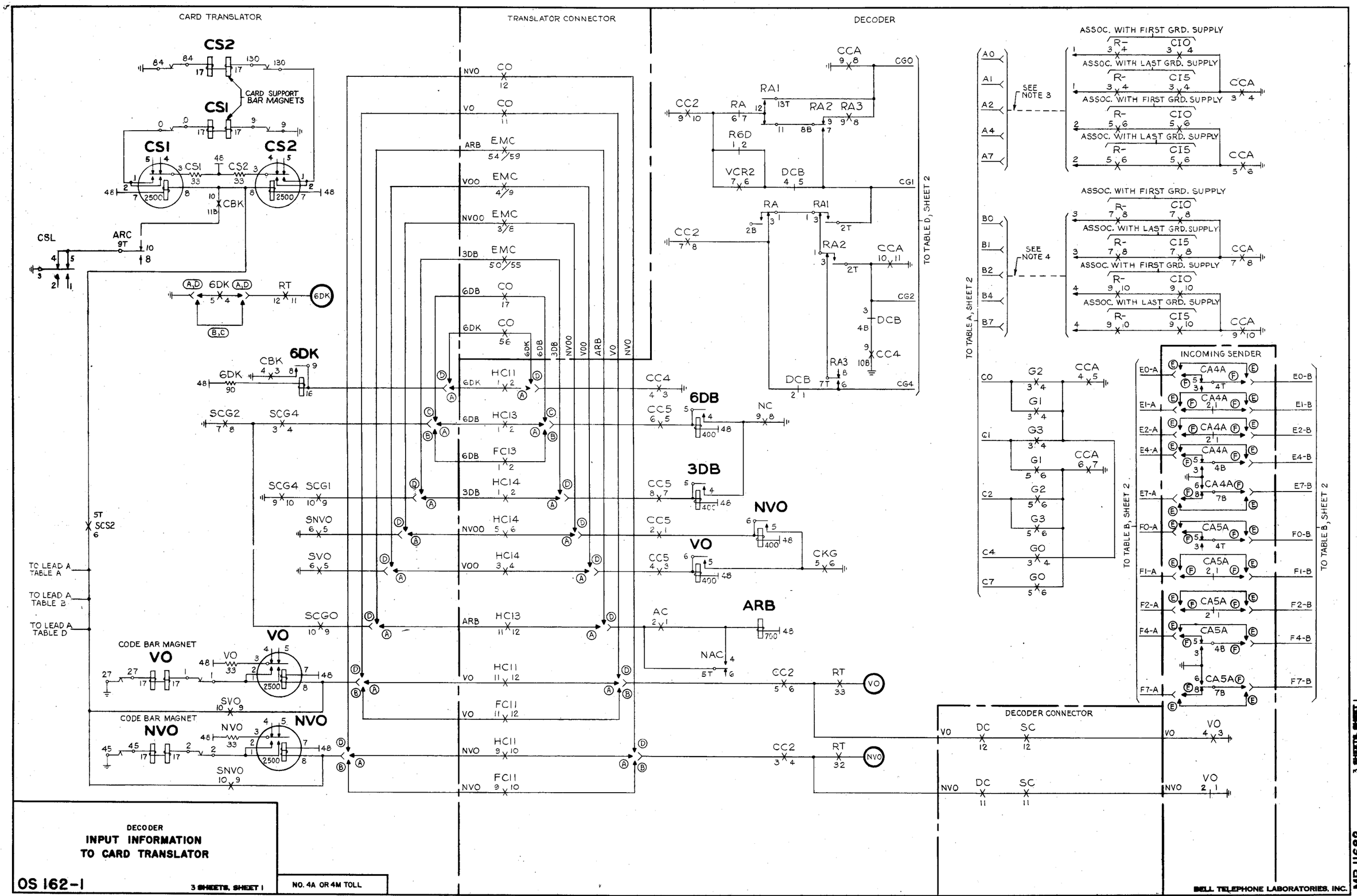
CARD TRANSLATOR
TRANSLATOR CONNECTOR
DECODER
CS2
CS1
CARD SUPPORT BAR MAGNETS
CSL
ARC
CBK
6DK
RT
6DB
3DB
NVO
VO
ARB
CODE BAR MAGNET
TO LEAD A TABLE A
TO LEAD A TABLE B
TO LEAD A TABLE D
TO TABLE A, SHEET 2
TO TABLE B, SHEET 2
TO TABLE D, SHEET 2
SEE NOTE 3
SEE NOTE 4
ASSOC. WITH FIRST GRD. SUPPLY
ASSOC. WITH LAST GRD. SUPPLY
INCOMING SENDER
DECODER CONNECTOR
DECODER
INPUT INFORMATION
TO CARD TRANSLATOR
OS 162-1
3 SHEETS, SHEET 1
NO. 4A OR 4M TOLL
ORDER AS BSP ITEM MP-11682
BELL TELEPHONE LABORATORIES, INC.
PRINTED IN U. S. A.
MP-11682

MP-11682

3 SHEETS, SHEET 2

ISSUE	DATE	
1	9-17-51	A.W.M.
2	9-30-53	A.E.Z.

TABLE A

OPERATION OF A0-D7 CODE BAR MAGNETS

INCOMING SENDER	DECODER CONNECTOR		DECODER														TRANSLATOR CONNECTOR	CARD TRANSLATOR							
REGISTER RELAY CONTACTS	CONNECTOR RELAY CONTACTS		TROUBLE RECORDER CUT-IN RELAY CONTACTS		PUNCH	CODE CUT-IN RELAY CONTACTS			LEAD TO SHEET 1	HOME TRANSLATOR CONNECTOR RELAY CONTACTS			DECODER FOREIGN AREA TRANSLATOR CONN. RELAY CONTACTS			CONNECTOR RELAY CONTACTS	CODE BAR RELAYS	RES.	JACK SPRING	CODE BAR MAGNETS	JACK SPRING	CODE BAR SLAVE RELAY CONTACTS		
A0	20	20	RT1	0	A0	1T	CC1	2T	A0	4T	HC11	3T	4T	FC11	3T	20	A0	A0	18	A0	9	5T	SA0	6T
A1	21	21	RT1	1	A1	3T	CC1	4T	A1	6T	HC11	5T	6T	FC11	5T	21	A1	A1	19	A1	27	9T	SA1	10T
A2	22	22	RT1	2	A2	5T	CC1	6T	A2	8T	HC11	7T	8T	FC11	7T	22	A2	A2	20	A2	45	9T	SA2	10T
A4	23	23	RT1	3	A4	7T	CC1	8T	A4	10B	HC11	9B	10B	FC11	9B	23	A4	A4	21	A4	63	9T	SA4	10T
A7	24	24	RT1	4	A7	9T	CC1	10T	A7	12B	HC11	11B	12B	FC11	11B	24	A7	A7	22	A7	81	9T	SA7	10T
B0	30	30	RT	54	B0	1B	CC1	2B	B0	2B	HC11	1B	2B	FC11	1B	30	B0	B0	36	B0	10	5T	SB0	6T
B1	31	31	RT	55	B1	3B	CC1	4B	B1	4B	HC11	3B	4B	FC11	3B	31	B1	B1	37	B1	28	9T	SB1	10T
B2	32	32	RT	56	B2	5B	CC1	6B	B2	6B	HC11	5B	6B	FC11	5B	32	B2	B2	38	B2	46	9T	SB2	10T
B4	33	33	RT	57	B4	7B	CC1	8B	B4	8B	HC11	7B	8B	FC11	7B	33	B4	B4	39	B4	64	9T	SB4	10T
B7	34	34	RT	58	B7	9B	CC1	10B	B7	12T	HC12	11T	12T	FC12	11T	34	B7	B7	40	B7	82	9T	SB7	10T
C0	40	40	RT	49	C0	1T	CC2	2T	C0	2T	HC12	1T	2T	FC12	1T	40	C0	C0	54	C0	10	5T	SC0	6T
C1	41	41	RT	50	C1	3T	CC2	4T	C1	4T	HC12	3T	4T	FC12	3T	41	C1	C1	55	C1	28	9T	SC1	10T
C2	42	42	RT	51	C2	5T	CC2	6T	C2	6T	HC12	5T	6T	FC12	5T	42	C2	C2	56	C2	46	9T	SC2	10T
C4	43	43	RT	52	C4	7T	CC2	8T	C4	8T	HC12	7T	8T	FC12	7T	43	C4	C4	57	C4	64	9T	SC4	10T
C7	44	44	RT	53	C7	9T	CC2	10T	C7	10T	HC12	9T	10T	FC12	9T	44	C7	C7	78	C7	82	9T	SC7	10T
D0	25	25	RT	44	D0	1T	CC3	2T	NONE	2B	HC12	1B	2B	FC12	1B	25	D0	D0	72	D0	11	5T	SD0	6T
D1	26	26	RT	45	D1	3T	CC3	4T	NONE	4B	HC12	3B	4B	FC12	3B	26	D1	D1	73	D1	29	9T	SD1	10T
D2	27	27	RT	46	D2	5T	CC3	6T	NONE	6B	HC12	5B	6B	FC12	5B	27	D2	D2	74	D2	47	9T	SD2	10T
D4	28	28	RT	47	D4	7T	CC3	8T	NONE	8B	HC12	7B	8B	FC12	7B	28	D4	D4	75	D4	65	9T	SD4	10T
D7	29	29	RT	48	D7	9T	CC3	10T	NONE	10B	HC12	9B	10B	FC12	9B	29	D7	D7	76	D7	83	9T	SD7	10T

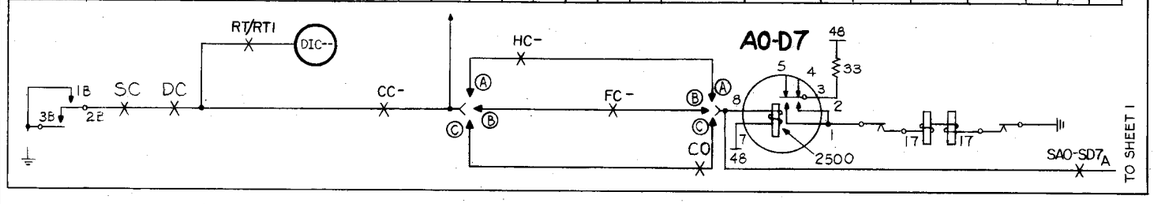

TABLE B

OPERATION OF E0-F7 CODE BAR MAGNETS

INCOMING SENDER				DECODER CONNECTOR		DECODER									TRANSLATOR CONNECTOR	CARD TRANSLATOR							
REGISTER RELAY CONTACTS	DESIGNATION OF LEAD TO SHEET 1			CONNECTOR RELAY CONTACTS		TBL. RCDR. CUT-IN RELAY CONTACTS	PUNCH	CODE CUT-IN RELAY CONTACTS			HOME TRANSLATOR CONN. RELAY CONTACTS		DECODER FOREIGN-AREA CONN. RELAY CONTACTS		CONNECTOR RELAY CONTACTS	CODE BAR RELAYS	RES.	JACK SPRING	CODE BAR MAGNETS	JACK SPRING	CODE BAR SLAVE RELAY CONTACTS		
E0	E0-A	E0-B		35	35	39	E0	1B	CC3	2B	4T	3T	4T	3T	35	E0	E0	90	E0	11	5T	SE0	6T
E1	E1-A	E1-B		36	36	40	E1	3B	CC3	4B	6T	5T	6T	5T	36	E1	E1	91	E1	29	9T	SE1	10T
E2	E2-A	E2-B		37	37	41	E2	5B	CC3	6B	8T	7T	8T	7T	37	E2	E2	92	E2	47	9T	SE2	10T
E4	E4-A	E4-B		38	38	42	E4	7B	CC3	8B	10T	9T	10T	9T	38	E4	E4	93	E4	65	9T	SE4	10T
E7	E7-A	E7-B		39	39	43	E7	9B	CC3	10B	12T	11T	12T	11T	39	E7	E7	94	E7	83	9T	SE7	10T
F0	F0-A	F0-B		45	45	34	F0	1T	CC4	2T	2T	1T	2T	1T	45	F0	F0	108	F0	12	5T	SF0	6T
F1	F1-A	F1-B		46	46	35	F1	3T	CC4	4T	4B	3B	4B	3B	46	F1	F1	109	F1	30	9T	SF1	10T
F2	F2-A	F2-B		47	47	36	F2	5T	CC4	6T	6B	5B	6B	5B	47	F2	F2	110	F2	48	9T	SF2	10T
F4	F4-A	F4-B		48	48	37	F4	7T	CC4	8T	8B	7B	8B	7B	48	F4	F4	111	F4	66	9T	SF4	10T
F7	F7-A	F7-B		49	49	38	F7	9T	CC4	10T	10B	9B	10B	9B	49	F7	F7	112	F7	84	9T	SF7	10T

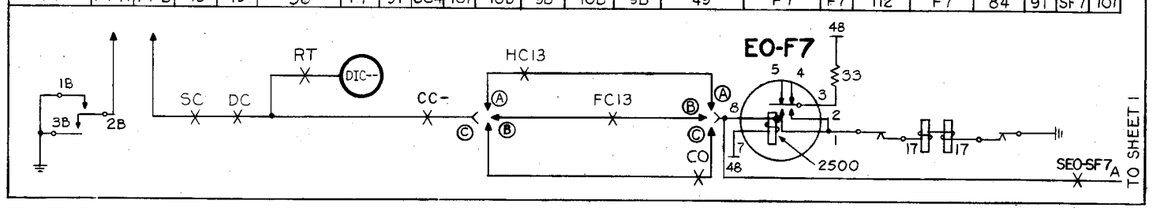

TABLE C

OPERATION OF CODE BAR SLAVE RELAYS

CARD TRANSLATOR											
JACK SPRINGS	CODE BAR MAGNET CONTACTS	JACK SPRINGS	CODE BAR SLAVE RELAYS & CONTACTS				RES.	TROUBLE RECORDER CUT-IN RELAY CONTACTS			PUNCH
5 & 23	CS1	13	4B	SCS1	3B	SCS1	8B	RT	7B	CS1
5 & 23	VO	14	7T	SVO	8T	SVO	6B	RT	5B	VO
5 & 23	NVO	15	7T	SNVO	8T	SNVO	4B	RT	3B	NVO
5 & 23	A0	31	4B	SA0	3B	SA0	4T	RT3	3T	A0
5 & 23	A1	32	6B	SA1	5B	SA1	6T	RT3	5T	A1
5 & 23	A2	33	6B	SA2	5B	SA2	8T	RT3	7T	A2
5 & 23	A4	34	6B	SA4	5B	SA4	10T	RT3	9T	A4
5 & 23	A7	35	6B	SA7	5B	SA7	12T	RT3	11T	A7
5 & 23	B0	49	4B	SB0	3B	SB0	4B	RT3	3B	B0
5 & 23	B1	50	6B	SB1	5B	SB1	6B	RT3	5B	B1
5 & 23	B2	51	6B	SB2	5B	SB2	8B	RT3	7B	B2
5 & 23	B4	52	6B	SB4	5B	SB4	10B	RT3	9B	B4
5 & 23	B7	53	6B	SB7	5B	SB7	12B	RT3	11B	B7
5 & 23	C0	67	4B	SC0	3B	SC0	4T	RT2	3T	C0
5 & 23	C1	68	6B	SC1	5B	SC1	6T	RT2	5T	C1
5 & 23	C2	69	6B	SC2	5B	SC2	8T	RT2	7T	C2
5 & 23	C4	70	6B	SC4	5B	SC4	10T	RT2	9T	C4
5 & 23	C7	71	6B	SC7	5B	SC7	12T	RT2	11T	C7
41 & 59	D0	85	4B	SD0	3B	SD0	4B	RT2	3B	D0
41 & 59	D1	86	6B	SD1	5B	SD1	6B	RT2	5B	D1
41 & 59	D2	87	6B	SD2	5B	SD2	8B	RT2	7B	D2
41 & 59	D4	88	6B	SD4	5B	SD4	10B	RT2	9B	D4
41 & 59	D7	89	6B	SD7	5B	SD7	12B	RT2	11B	D7
41 & 59	E0	103	4B	SE0	3B	SE0	4T	RT1	3T	E0
41 & 59	E1	104	6B	SE1	5B	SE1	6T	RT1	5T	E1
41 & 59	E2	105	6B	SE2	5B	SE2	8T	RT1	7T	E2
41 & 59	E4	106	6B	SE4	5B	SE4	10T	RT1	9T	E4
41 & 59	E7	107	6B	SE7	5B	SE7	12T	RT1	11T	E7
41 & 59	F0	121	4B	SF0	3B	SF0	4B	RT1	3B	F0
41 & 59	F1	122	6B	SF1	5B	SF1	6B	RT1	5B	F1
41 & 59	F2	123	6B	SF2	5B	SF2	8B	RT1	7B	F2
41 & 59	F4	124	6B	SF4	5B	SF4	10B	RT1	9B	F4
41 & 59	F7	125	6B	SF7	5B	SF7	12B	RT1	11B	F7
41 & 59	CG0	139	8B	SCG0	7B	SCG0	2B	RT1	1B	CG0
41 & 59	CG1	140	7B	SCG1	8B	SCG1	10T	RT	9T	CG1
41 & 59	CG2	141	10B	SCG2	9B	SCG2	12T	RT	11T	CG2
41 & 59	CG4	142	8B	SCG4	7B	SCG4	2B	RT	1B	CG4
41 & 59	CS2	143	4B	SCS2	3B	SCS2	10B	RT	9B	CS2

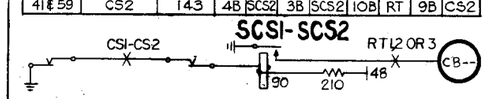

TABLE D

OPERATION OF CARD GROUPING CODE BAR MAGNETS

DECODER				TRANSLATOR CONNECTOR	CARD TRANSLATOR							
DESIGNATION OF LEAD TO SHEET 1	HOME TRANSLATOR CONN. RELAY CONTACTS		DECODER FOREIGN-AREA RELAY CONTACTS		CONNECTOR RELAY CONTACTS	CODE BAR RELAYS	RES.	JACK SPRING	CODE BAR MAGNETS	JACK SPRING	CODE BAR SLAVE RELAY CONTACTS	
CG0	3T	4T	3T	4T	50	CG0	CG0	126	CG0	12	9T	SCG0	10T
CG1	5T	6T	5T	6T	51	CG1	CG1	127	CG1	30	9T	SCG1	10T
CG2	7T	8T	7T	8T	52	CG2	CG2	128	CG2	48	9T	SCG2	10T
CG4	9T	10T	9T	10T	53	CG4	CG4	129	CG4	66	9T	SCG4	10T

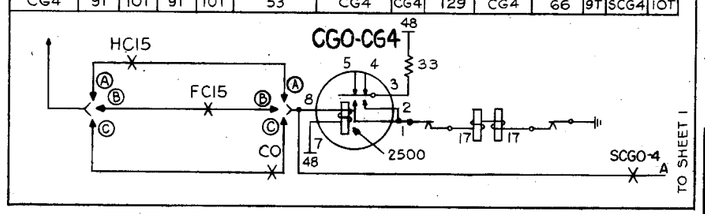

NOTES:

1.

OS OPTION	FEATURE OR OPTION	SD OPTION	SD
A	FOR HOME TRANSLATOR.	FIG. 14	63340-01
		Y	68342-01
B	FOR DECODER FOREIGN TRANSLATOR	FIG. 15	63340-01
		W	68342-01
C	FOR FOREIGN TRANSLATOR.	Z	63341-01
		X	68342-01
D	FOR EMERGENCY TRANSLATOR	FIG. 3 & Y	63341-01
		Z	68342-01
E	1 DIGIT TX CALLS	LOOPED WIRING	68221-01 68222-01 68423-01 68424-01
F	2,3, OR 2 & 3 DIGIT TX CALLS	X,W,B	68221-01 68423-01 68424-01
		X,W,K	68222-01

2. CS1 & 2 MAGNETS ARE ENERGIZED BY CS1 & 2 RELAYS OPERATED, BUT DO NOT OPERATE UNTIL CARD SUPPORT LIFT MAGNETS ARE DE-ENERGIZED.

3. LEADS 1 & 2 CONNECT TO A0-A7 AS REQUIRED TO AGREE WITH 1ST DIGIT OF ROUTE RELAY NUMBER.

4. LEADS 3 & 4 CONNECT TO B0-B7 AS REQUIRED TO AGREE WITH 2ND DIGIT OF ROUTE RELAY NUMBER.

SEQUENCE CHART

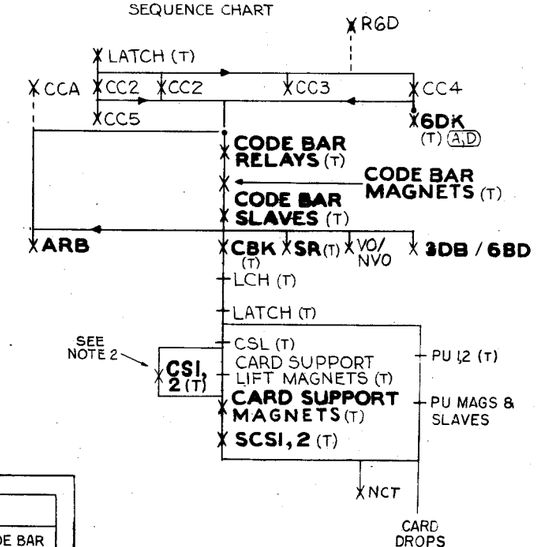

INCOMING SENDER CKT DP 4M	SD-68423-01 ISS. 2
INCOMING SENDER CKT MF 4M	SD-68424-01 ISS. 4
CARD TRANSLATOR CKT.	SD-68342-01, ISS. 6
*DECODER CKT.	SD-68340-01, ISS. 8
DECODER CONNECTOR CKT.	SD-68339-01, ISS. 4
INCOMING SENDER CKT. DP 4A	SD-68221-01, ISS. 14
INCOMING SENDER CKT. MF 4A	SD-68222-01, ISS. 16
TRANSLATOR CONNECTOR CKT.	SD-68341-01, ISS. 6

DECODER

INPUT INFORMATION TO CARD TRANSLATOR

3 SHEETS, SHEET 2

OS 162-1

NO. 4A OR 4M TOLL

BELL TELEPHONE LABORATORIES, INC.

PRINTED IN U. S. A.

ORDER AS BSP ITEM MP-11682

MP-11682

3 SHEETS, SHEET 3

ISSUE		
DATE		
9-1-51	1	A.H.M.
9-30-55	2	M.E.H.

CARD TRANSLATOR

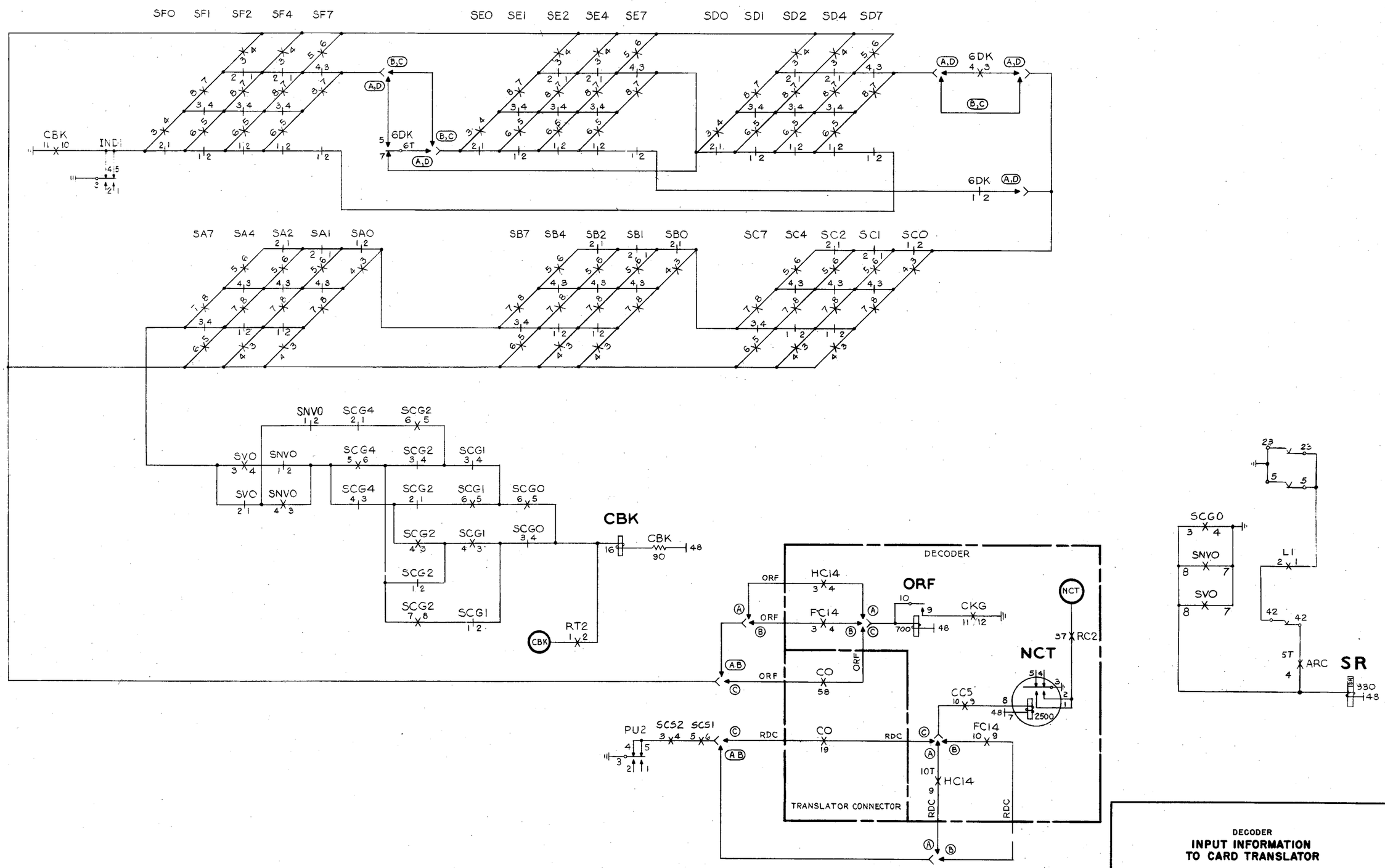

DECODER
INPUT INFORMATION TO CARD TRANSLATOR

NO. 4A OR 4M TOLL

3 SHEETS, SHEET 3

OS 162-1

MP-11604

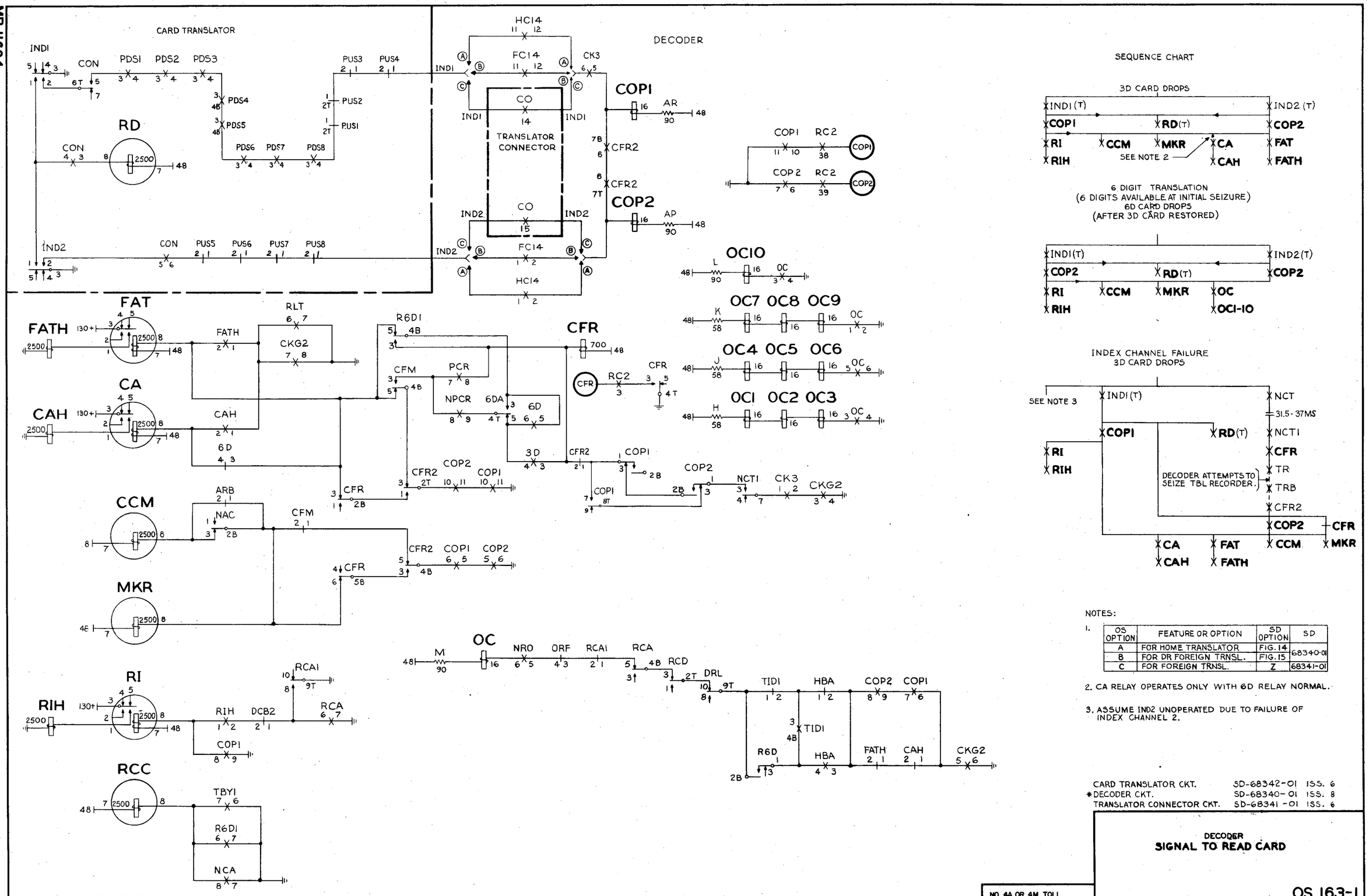

NOTES:

1.

OS OPTION	FEATURE OR OPTION	SD OPTION	SD
A	FOR HOME TRANSLATOR	FIG. 14	68340-01
B	FOR DR FOREIGN TRNSL.	FIG. 15	68340-01
C	FOR FOREIGN TRNSL.	Z	68341-01

2. CA RELAY OPERATES ONLY WITH 6D RELAY NORMAL.

3. ASSUME IND2 UNOPERATED DUE TO FAILURE OF INDEX CHANNEL 2.

CARD TRANSLATOR CKT.	SD-68342-01	ISS. 6
*DECODER CKT.	SD-68340-01	ISS. 8
TRANSLATOR CONNECTOR CKT.	SD-68341-01	ISS. 6

ISSUE	1	2
DATE	6-12-67	9-30-68

NO. 4A OR 4M TOLL

DECODER
SIGNAL TO READ CARD

OS 163-1

BELL TELEPHONE LABORATORIES, INC.
PRINTED IN U. S. A.
ORDER AS BSP ITEM MP- 11604

OPERATION OF MARKER GROUP START, GROUP END, CLASS ¢ VARIABLE SPILL READER RELAYS

CARD TRANSLATOR	TRANSLATOR CONNECTOR		DECODER									MARKER CONNECTOR	MARKER										
CHANNEL OUTPUT DETECTORS	CONNECTOR RELAYS AND CONTACTS		HOME TRANSLATOR CONNECTOR RELAYS AND CONTACTS			DECODER FOREIGN TRANSLATOR CONNECTOR RELAYS AND CONTACTS			OUTPUT CONTROL RELAYS AND CONTACTS			CONNECTOR RELAYS AND CONTACTS	READER RELAYS AND CONTACTS		RES.	RCD1/2 RELAY CONTACTS	READER RELAYS AND CONTACTS			TROUBLE RECORDER CUT-IN RELAY AND CONTACTS		TROUBLE RECORDER PUNCH
GSTO	C2	35	7T	HC8	8T	7T	FC8	8T	7T	OC8	8T	3 OR 8	12B	GSTO	11B	GSTO		10B	GSTO	9B	RC1	21	GSTO
GST1	C2	36	9T	HC8	10T	9T	FC8	10T	9T	OC8	10T	4 OR 9	12B	GST1	11B	GST1		10B	GST1	9B	RC1	22	GST1
GSU0	C2	39	1T	HC8	2T	1T	FC8	2T	1T	OC8	2T	10 OR 15	12B	GSU0	11B	GSU0		5B	GSU0	4B	RC1	23	GSU0
GSU1	C2	40	3T	HC8	4T	3T	FC8	4T	3T	OC8	4T	11 OR 16	10B	GSU1	9B	GSU1		5B	GSU1	4B	RC1	24	GSU1
GSU2	C2	41	5T	HC8	6T	5T	FC8	6T	5T	OC8	6T	12 OR 17	10B	GSU2	9B	GSU2		5B	GSU2	4B	RC1	25	GSU2
GSU4	C2	42	7B	HC8	8B	7B	FC8	8B	7B	OC8	8B	13 OR 18	10B	GSU4	9B	GSU4		5B	GSU4	4B	RC1	26	GSU4
GSU7	C2	43	9B	HC8	10B	9B	FC8	10B	9B	OC8	10B	14 OR 19	10B	GSU7	9B	GSU7		5B	GSU7	4B	RC1	27	GSU7
GET0	C2	37	5B	HC8	6B	5B	FC8	6B	5B	OC8	6B	23 OR 28	12B	GET0	11B	GET0		10B	GET0	9B	RC1	28	GET0
GET1	C2	38	11B	HC8	12B	11B	FC8	12B	11B	OC8	12B	24 OR 29	12B	GET1	11B	GET1		10B	GET1	9B	RC1	29	GET1
GEU0	C2	44	1B	HC8	2B	1B	FC8	2B	1B	OC8	2B	30 OR 35	10B	GEU0	9B	GEU0		5B	GEU0	4B	RC1	30	GEU0
GEU1	C2	45	3B	HC8	4B	3B	FC8	4B	3B	OC8	4B	31 OR 36	10B	GEU1	9B	GEU1		5B	GEU1	4B	RC1	31	GEU1
GEU2	C2	46	5T	HC9	6T	5T	FC9	6T	5T	OC9	6T	32 OR 37	10B	GEU2	9B	GEU2		5B	GEU2	4B	RC1	32	GEU2
GEU4	C2	47	7T	HC9	8T	7T	FC9	8T	7T	OC9	8T	33 OR 38	10B	GEU4	9B	GEU4		5B	GEU4	4B	RC1	33	GEU4
GEU7	C2	48	9T	HC9	10T	9T	FC9	10T	9T	OC9	10T	34 OR 39	10B	GEU7	9B	GEU7		5B	GEU7	4B	RC1	34	GEU7
CDLC	C1	54	11T	HC9	12T	11T	FC9	12T	11T	OC9	12T	2 OR 7	7B	CDLC	6B	CDLC		4B	CDLC	3B	RC1	46	CDLC
CLT0	C1	48	1T	HC9	2T	1T	FC9	2T	1T	OC9	2T	43 OR 48	12B	CLT0	11B	CLT0		10B	CLT0	9B	RC1	35	CLT0
CLT1	C1	49	3T	HC9	4T	3T	FC9	4T	3T	OC9	4T	44 OR 49	12B	CLT1	11B	CLT1		10B	CLT1	9B	RC1	36	CLT1
CLU0	C1	15	1B	HC9	2B	1B	FC9	2B	1B	OC9	2B	50 OR 55	10B	CLU0	9B	CLU0		5B	CLU0	4B	RC1	37	CLU0
CLU1	C1	16	3B	HC9	4B	3B	FC9	4B	3B	OC9	4B	51 OR 56	10B	CLU1	9B	CLU1		5B	CLU1	4B	RC1	38	CLU1
CLU2	C1	17	5B	HC9	6B	5B	FC9	6B	5B	OC9	6B	52 OR 57	10B	CLU2	9B	CLU2		5B	CLU2	4B	RC1	39	CLU2
CLU4	C1	18	7B	HC9	8B	7B	FC9	8B	7B	OC9	8B	53 OR 58	10B	CLU4	9B	CLU4		5B	CLU4	4B	RC1	40	CLU4
CLU7	C1	19	9B	HC9	10B	9B	FC9	10B	9B	OC9	10B	54 OR 59	10B	CLU7	9B	CLU7		5B	CLU7	4B	RC1	41	CLU7
TP0	C2	55	7T	HC10	8T	7T	FC10	8T	7T	OC10	8T	20 OR 25	8B	TP0	7B	TP0		7T	TP0	8T	RC1	52	TP0
TP1	C2	56	9T	HC10	10T	9T	FC10	10T	9T	OC10	10T	21 OR 26	8B	TP1	7B	TP1		7T	TP1	8T	RC1	53	TP1
TP2	C2	57	11T	HC10	12T	11T	FC10	12T	11T	OC10	12T	22 OR 27	8B	TP2	7B	TP2		9T	TP2	10T	RC1	54	TP2
SK6	C2	54	5T	HC10	6T	5T	FC10	6T	5T	OC10	6T	42 OR 47	5B	SK6	4B	SK6		4T	SK6	5T	RC2	20	SK6
SK3	C2	53	3T	HC10	4T	3T	FC10	4T	3T	OC10	4T	41 OR 46	7B	SK3	6B	SK3		4T	SK3	5T	RC2	19	SK3
NSK	C2	52	1T	HC10	2T	1T	FC10	2T	1T	OC10	2T	40 OR 45	5B	NSK	4B	NSK		4T	NSK	5T	RC2	18	NSK

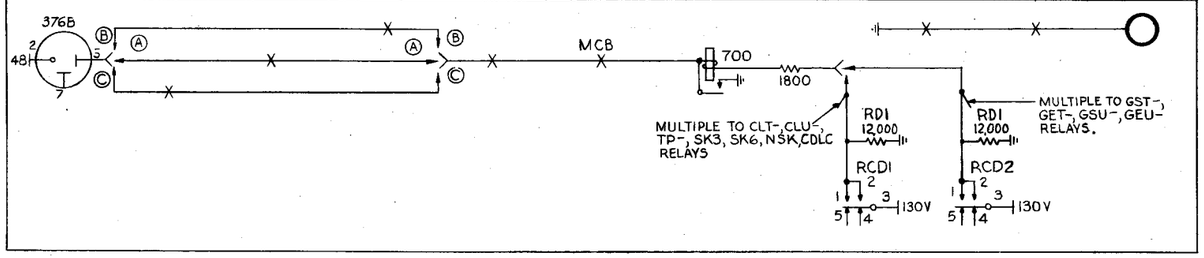

TABLE A

EQUIPMENT LEVEL NUMBER	LOCATION OF PHOTO-DETECTORS — EQUIPMENT COLUMN NUMBER 1	2	3	4	5	6	7	8	9	10	11	12	13	14	15	16	17	18
1		NCA	CA4	CA5	CA6	1T	TC	1TC			TS0	TS1	TS2	TPC	TP0	TP1	TP2	
2	IND1	HB	BT0	BT1	BU0	BU1	BU2	BU4	BU7	CLT0	CLT1		CLU0	CLU1	CLU2	CLU4	CLU7	CDLC
3	NAC	AC	AHA	AFA	ART0	ART1	ART2	ART4	ART7	ARU0	ARU1	ARU2	ARU4	ARU7				
4	RI0	RI1	RI2	RI4	RI7	CDC0	CDC1	CDC2	CDC4	CDC7								IND2
5	CCHN	CCTN	CCUN	CCH0	CCH1	CCH2	CCH4	CCH7	CCT0	CCT1	CCT2	CCT4	CCT7	CCU0	CCU1	CCU2	CCU4	CCU7
6	NSK	SK3	SK6			TCT0	TCT1	TCT2	TCU0	TCU1	TCU2	TCU4	TCU7	TB0	TB1	TB2	TB4	TB7
7		GST0	GST1	GSU0	GSU1	GSU2	GSU4	GSU7			GET0	GET1	GEU0	GEU1	GEU2	GEU4	GEU7	

OPERATION OF TRUNK BLOCK, TRUNK CONNECTOR AND MARKER SELECTION READER RELAYS

CARD TRANSLATOR	TRANSLATOR CONNECTOR		DECODER																				
CHANNEL OUTPUT DETECTORS	CONNECTOR RELAYS AND CONTACTS		HOME TRANSLATOR CONNECTOR RELAYS AND CONTACTS			DECODER FOREIGN TRANSLATOR CONNECTOR RELAYS AND CONTACTS			OUTPUT CONTROL RELAYS AND CONTACTS			READER RELAYS AND CONTACTS			RES.	READER RELAYS AND CONTACTS			TROUBLE RECORDER CUT-IN RELAYS AND CONTACTS		TROUBLE RECORDER PUNCH
TCT0	45		1B	HC6	2B	1B	FC6	2B	1B	OC6	2B	12B	TCT0	11B	TCT0	9B	TCT0	10B	RC1	10	TBCT0
TCT1	46		3B	HC6	4B	3B	FC6	4B	3B	OC6	4B	12B	TCT1	11B	TCT1	9B	TCT1	10B	RC1	9	TBCT1
TCT2	47		5B	HC6	6B	5B	FC6	6B	5B	OC6	6B	12B	TCT2	11B	TCT2	9B	TCT2	10B	RC1	8	TBCT2
TCU0	55		7B	HC6	8B	7B	FC6	8B	7B	OC6	8B	10B	TCU0	9B	TCU0	4B	TCU0	5B	RC1	15	TBCU0
TCU1	56		9B	HC6	10B	9B	FC6	10B	9B	OC6	10B	10B	TCU1	9B	TCU1	4B	TCU1	5B	RC1	14	TBCU1
TCU2	57		1T	HC7	2T	1T	FC7	2T	1T	OC7	2T	10B	TCU2	9B	TCU2	4B	TCU2	5B	RC1	13	TBCU2
TCU4	58		3T	HC7	4T	3T	FC7	4T	3T	OC7	4T	10B	TCU4	9B	TCU4	4B	TCU4	5B	RC1	12	TBCU4
TCU7	59		5T	HC7	6T	5T	FC7	6T	5T	OC7	6T	10B	TCU7	9B	TCU7	4B	TCU7	5B	RC1	11	TBCU7
TB0	30		7T	HC7	8T	7T	FC7	8T	7T	OC7	8T	4B	TB0	3B	TB0	1B	TB0	2B	RC1	20	TB0
TB1	31		9T	HC7	10T	9T	FC7	10T	9T	OC7	10T	4B	TB1	3B	TB1	1B	TB1	2B	RC1	19	TB1
TB2	32		11T	HC7	12T	11T	FC7	12T	11T	OC7	12T	4B	TB2	3B	TB2	1B	TB2	2B	RC1	18	TB2
TB4	33		9B	HC7	10B	9B	FC7	10B	9B	OC7	10B	4B	TB4	3B	TB4	1B	TB4	2B	RC1	17	TB4
TB7	34		11B	HC7	12B	11B	FC7	12B	11B	OC7	12B	4B	TB7	3B	TB7	1B	TB7	2B	RC1	16	TB7
TC	50		5T	HC5	6T	5T	FC5	6T	5T	OC5	6T	7B	TC	6B	TC	2B	TC	1B	RC	10	TC
ITC	51		3T	HC5	4T	3T	FC5	4T	3T	OC5	4T	5B	ITC	4B	ITC	2B	ITC	1B	RC	9	ITC
IT	52		1T	HC5	2T	1T	FC5	2T	1T	OC5	2T	7B	IT	6B	IT	4B	IT	5B	RC	8	IT

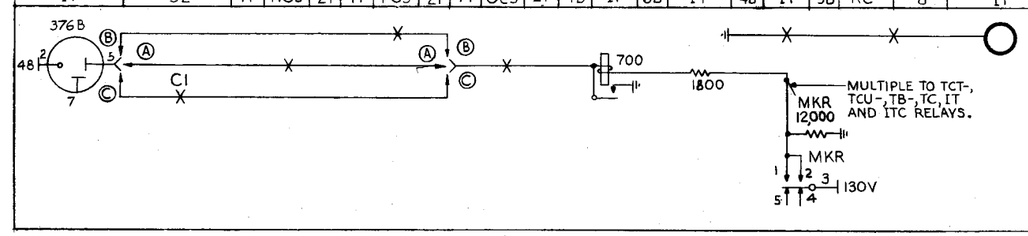

OPERATION OF BOX NUMBER, TRAFFIC SEPARATION, AND AREA CODE ROUTING READER RELAYS

CARD TRANSLATOR	TRANSLATOR CONNECTOR		DECODER																				
CHANNEL OUTPUT DETECTORS	CONNECTOR RELAYS AND CONTACTS		HOME TRANSLATOR CONNECTOR RELAYS AND CONTACTS			DECODER FOREIGN TRANSLATOR CONNECTOR RELAYS AND CONTACTS			OUTPUT CONTROL RELAYS AND CONTACTS			READER RELAYS AND CONTACTS			RES.	READER RELAYS AND CONTACTS			TROUBLE RECORDER CUT-IN RELAYS AND CONTACTS		TROUBLE RECORDER PUNCH
HB	EMC	22 OR 27	5B	HC1	6B				5B	OC1	6B	5B	HB	4B	HB	2B	HB	1B	RC	35	6DTH
BT0	EMC	20 OR 25	9T	HC1	10T				9T	OC1	10T	9T	BT0	8T	BT0	5T	BT0	6T	RC2	4	6DT0
BT1	EMC	21 OR 26	11T	HC1	12T				11T	OC1	12T	6T	BT1	7T	BT1	1T	BT1	2T	RC2	5	6DT1
BU0	EMC	10 OR 15	1T	HC1	2T				1T	OC1	2T		MBU0		CL						
BU1	EMC	11 OR 16	3T	HC1	4T				3T	OC1	4T		MBU1		CM						
BU2	EMC	12 OR 17	5T	HC1	6T				5T	OC1	6T		MBU2		CN						
BU4	EMC	13 OR 18	7T	HC1	8T				7T	OC1	8T		MBU4		CP						
BU7	EMC	14 OR 19	9B	HC1	10B				9B	OC1	10B		MBU7		CR						
TS0	C2	49	1T	HC4	2T	1T	FC4	2T	1T	OC4	2T	5B	TS0	4B	TS0	5T	TS0	4T	RC1	6	TS0
TS1	C2	50	3T	HC4	4T	3T	FC4	4T	3T	OC4	4T	5B	TS1	4B	TS1	5T	TS1	4T	RC1	5	TS1
TS2	C2	51	5T	HC4	6T	5T	FC4	6T	5T	OC4	6T	10B	TS2	9B	TS2	8B	TS2	7B	RC1	4	TS2
TPC	C1	53	11T	HC4	12T	11T	FC4	12T	11T	OC4	12T	5B	TPC	4B	TPC	5T	TPC	4T	RC1	7	TPC
NAC	EMC	31 OR 36	3T	HC2	4T				3T	OC2	4T	10B	NAC	9B	NAC	8B	NAC	7B	RC2	15	NAC
AC	EMC	30 OR 35	5T	HC2	6T				5T	OC2	6T	9B	AC	8B	AC	7B	AC	6B	RC2	12	AC
AHA	EMC	24 OR 29	7T	HC2	8T				7T	OC2	8T	9B	AHA	8B	AHA	7B	AHA	6B	RC2	13	AHA
AFA	EMC	23 OR 28	9T	HC2	10T				9T	OC2	10T	9B	AFA	8B	AFA*	7B	AFA	6B	RC2	14	AFA

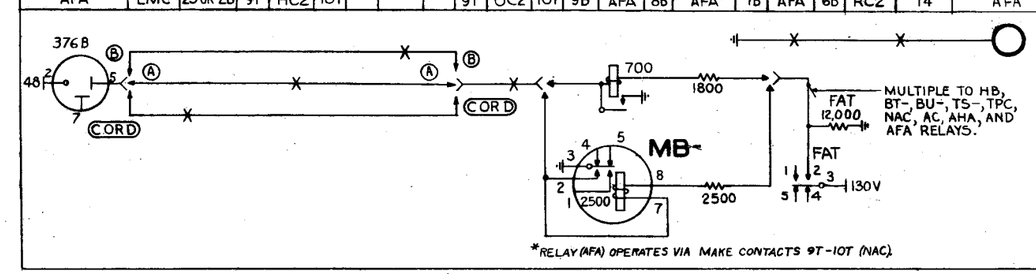

*RELAY (AFA) OPERATES VIA MAKE CONTACTS 9T-10T (NAC).

DECODER
READING CARD TRANSLATOR OUTPUT

OS 164-1

2 SHEETS, SHEET 1

NO. 4M TOLL

ORDER AS BSP ITEM MP-11606

ISSUE	1	2	
DATE	7-6-57	9-1-58	

2 SHEETS, SHEET 1

MP-11606

BELL TELEPHONE LABORATORIES, INC.

PRINTED IN U. S. A.

MP-11606

2 SHEETS, SHEET 2

ISSUE	DATE
1	7-9-61
2	5-16-63

OPERATION OF "COME AGAIN" READING RELAYS

CARD TRANSLATOR CHANNEL OUTPUT DETECTORS	TRANSLATOR CONNECTOR CONNECTOR RELAYS AND CONTACTS	DECODER: HOME TRANSLATOR CONNECTOR RELAYS AND CONTACTS		OUTPUT CONTROL RELAYS AND CONTACTS		READING RELAYS AND CONTACTS			RES.
CA4	33 OR 38	7B	8B	7B	8B	10B	CA4	9B	CA4
CA5	34 OR 39	11B	12B	11B	12B	10B	CA5	9B	CA5
CA6	40 OR 49	1B	2B	1B	2B	10B	CA6	9B	CA6
NCA	32 OR 37	3B	4B	3B	4B	10B	NCA	9B	NCA

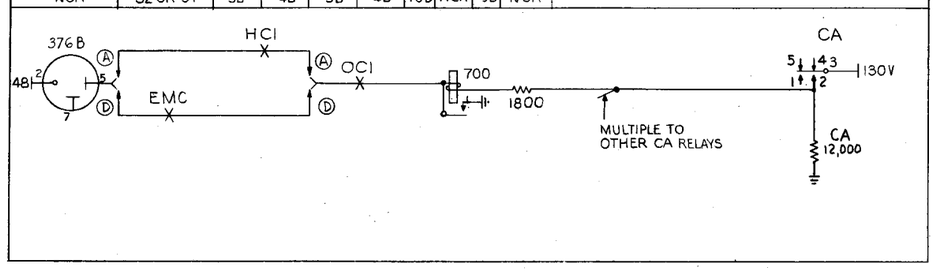

OPERATION OF ROUTING INSTRUCTION READING RELAYS

CARD TRANSLATOR CHANNEL OUTPUT DETECTORS	TRANSLATOR CONNECTOR CONNECTOR RELAYS AND CONTACTS	DECODER: HOME TRANSLATOR CONNECTOR RELAYS AND CONTACTS		DECODER FOREIGN TRANSLATOR CONNECTOR RELAYS AND CONTACTS		OUTPUT CONTROL RELAYS AND CONTACTS		READING RELAYS AND CONTACTS			RES.	READING RELAYS AND CONTACTS			TROUBLE RECORDER CUT-IN RELAYS AND CONTACTS	TROUBLE RECORDER PUNCH
RI0	35	1B	2B	1B	2B	1B	2B	8B	RI0	7B	RI0	6B	RI0	5B	30	RI0
RI1	36	3B	4B	3B	4B	3B	4B	11B	RI1	10B	RI1	9B	RI1	10B	29	RI1
RI2	37	5B	6B	5B	6B	5B	6B	11B	RI2	10B	RI2	9B	RI2	10B	28	RI2
RI4	38	7B	8B	7B	8B	7B	8B	8B	RI4	7B	RI4	6B	RI4	5B	27	RI4
RI7	39	9B	10B	9B	10B	9B	10B	8B	RI7	7B	RI7	6B	RI7	5B	26	RI7

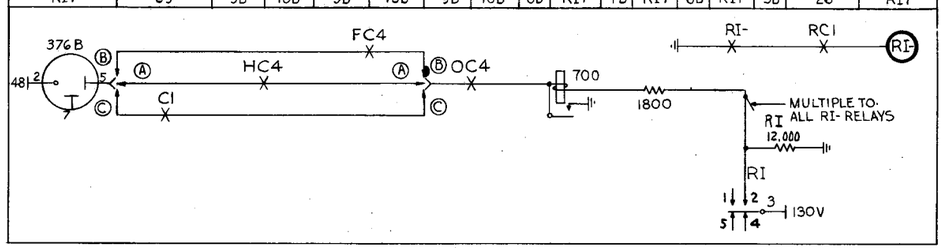

NOTES:

1.

OS OPTION	FEATURE OR OPTION	SD OPTION	SD
A	FOR HOME TRANSLATOR	FIG. 14	68340-01
		Y	68342-01
B	FOR DECODER FOREIGN TRANSLATOR	FIG. 15	68340-01
		W	68342-01
C	FOR FOREIGN TRANSLATOR	Z	68341-01
		X	68342-01
D	FOR EMERGENCY TRANSLATOR	FIG. 3 & Y	68341-01
		Z	68342-01

OPERATION OF CODE CONVERSION READING RELAYS

CARD TRANSLATOR CHANNEL OUTPUT DETECTOR	TRANSLATOR CONNECTOR CONNECTOR RELAYS AND CONTACTS	DECODER: HOME TRANSLATOR CONNECTOR RELAYS AND CONTACTS			DECODER FOREIGN TRANSLATOR CONNECTOR RELAYS AND CONTACTS			OUTPUT CONTROL RELAYS AND CONTACTS			READING RELAYS AND CONTACTS			RES.	READING RELAYS AND CONTACTS			TROUBLE RECORDER CUT-IN RELAY AND CONTACTS	TROUBLE RECORDER PUNCH
CCHN	24	11T	HC2	12T	11T	FC2	12T	11T	OC2	12T	4B	CCHN	3B	CCHN	2B	CCHN	1B	33	CCHN
CCHO	30	1T	HC2	2T	1T	FC2	2T	1T	OC2	2T	10B	CCHO	9B	CCHO	8B	CCHO	7B	28	CCHO
CCH1	31	3B	HC2	4B	3B	FC2	4B	3B	OC2	4B	10B	CCH1	9B	CCH1	8B	CCH1	7B	29	CCH1
CCH2	32	5B	HC2	6B	5B	FC2	6B	5B	OC2	6B	10B	CCH2	9B	CCH2	8B	CCH2	7B	30	CCH2
CCH4	33	7B	HC2	8B	7B	FC2	8B	7B	OC2	8B	10B	CCH4	9B	CCH4	8B	CCH4	7B	31	CCH4
CCH7	34	9B	HC2	10B	9B	FC2	10B	9B	OC2	10B	10B	CCH7	9B	CCH7	8B	CCH7	7B	32	CCH7
CCTN	23	11B	HC2	12B	11B	FC2	12B	11B	OC2	12B	4B	CCTN	3B	CCTN	2B	CCTN	1B	27	CCTN
CCTO	25	1B	HC2	2B	1B	FC2	2B	1B	OC2	2B	10B	CCTO	9B	CCTO	8B	CCTO	7B	22	CCTO
CCT1	26	3T	HC3	4T	3T	FC3	4T	3T	OC3	4T	10B	CCT1	9B	CCT1	8B	CCT1	7B	23	CCT1
CCT2	27	5T	HC3	6T	5T	FC3	6T	5T	OC3	6T	10B	CCT2	9B	CCT2	8B	CCT2	7B	24	CCT2
CCT4	28	7T	HC3	8T	7T	FC3	8T	7T	OC3	8T	10B	CCT4	9B	CCT4	8B	CCT4	7B	25	CCT4
CCT7	29	9T	HC3	10T	9T	FC3	10T	9T	OC3	10T	10B	CCT7	9B	CCT7	8B	CCT7	7B	26	CCT7
CCUN	22	11T	HC3	12T	11T	FC3	12T	11T	OC3	12T	4B	CCUN	3B	CCUN	2B	CCUN	1B	21	CCUN
CCUO	15	1T	HC3	2T	1T	FC3	2T	1T	OC3	2T	10B	CCUO	9B	CCUO	8B	CCUO	7B	16	CCUO
CCU1	16	3B	HC3	4B	3B	FC3	4B	3B	OC3	4B	10B	CCU1	9B	CCU1	8B	CCU1	7B	17	CCU1
CCU2	17	5B	HC3	6B	5B	FC3	6B	5B	OC3	6B	10B	CCU2	9B	CCU2	8B	CCU2	7B	18	CCU2
CCU4	18	7B	HC3	8B	7B	FC3	8B	7B	OC3	8B	10B	CCU4	9B	CCU4	8B	CCU4	7B	19	CCU4
CCU7	19	9B	HC3	10B	9B	FC3	10B	9B	OC3	10B	10B	CCU7	9B	CCU7	8B	CCU7	7B	20	CCU7

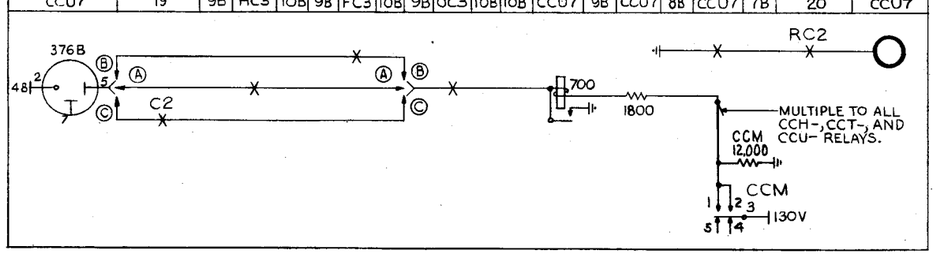

OPERATION OF CONTINUITY AND DIGIT CONTROL, AND ALTERNATE ROUTE READING RELAYS

CARD TRANSLATOR CHANNEL OUTPUT DETECTORS	TRANSLATOR CONNECTOR CONNECTOR RELAYS AND CONTACTS	DECODER: HOME TRANSLATOR CONNECTOR RELAYS AND CONTACTS			DECODER FOREIGN TRANSLATOR CONNECTOR RELAYS AND CONTACTS			OUTPUT CONTROL RELAYS AND CONTACTS			READING RELAYS AND CONTACTS			RES.	READING RELAYS AND CONTACTS			TROUBLE RECORDER CUT-IN RELAYS AND CONTACTS	TROUBLE RECORDER PUNCH
CDCO	40	1B	HC7	2B	1B	FC7	2B	1B	OC7	2B	12B	CDCO	11B	CDCO	9B	CDCO	10B	21	CDCO
CDC1	41	3B	HC7	4B	3B	FC7	4B	3B	OC7	4B	12B	CDC1	11B	CDC1	9B	CDC1	10B	22	CDC1
CDC2	42	5B	HC7	6B	5B	FC7	6B	5B	OC7	6B	12B	CDC2	11B	CDC2	9B	CDC2	10B	23	CDC2
CDC4	43	7B	HC7	8B	7B	FC7	8B	7B	OC7	8B	12B	CDC4	11B	CDC4	9B	CDC4	10B	24	CDC4
CDC7	44	11T	HC8	12T	11T	FC8	12T	11T	OC8	12T	12B	CDC7	11B	CDC7	9B	CDC7	10B	25	CDC7
ARTO	20	1B	HC5	2B	1B	FC5	2B	1B	OC5	2B	10B	ARTO	9B	ARTO	4B	ARTO	5B	46	ARTO
ART1	21	3B	HC5	4B	3B	FC5	4B	3B	OC5	4B	10B	ART1	9B	ART1	4B	ART1	5B	45	ART1
ART2	22	5B	HC5	6B	5B	FC5	6B	5B	OC5	6B	10B	ART2	9B	ART2	4B	ART2	5B	44	ART2
ART4	23	7B	HC5	8B	7B	FC5	8B	7B	OC5	8B	10B	ART4	9B	ART4	4B	ART4	5B	43	ART4
ART7	24	9B	HC5	10B	9B	FC5	10B	9B	OC5	10B	10B	ART7	9B	ART7	4B	ART7	5B	42	ART7
ARUO	25	1T	HC6	2T	1T	FC6	2T	1T	OC6	2T	10B	ARUO	9B	ARUO	4B	ARUO	5B	41	ARUO
ARU1	26	3T	HC6	4T	3T	FC6	4T	3T	OC6	4T	10B	ARU1	9B	ARU1	4B	ARU1	5B	40	ARU1
ARU2	27	5T	HC6	6T	5T	FC6	6T	5T	OC6	6T	10B	ARU2	9B	ARU2	4B	ARU2	5B	39	ARU2
ARU4	28	7T	HC6	8T	7T	FC6	8T	7T	OC6	8T	10B	ARU4	9B	ARU4	4B	ARU4	5B	38	ARU4
ARU7	29	9T	HC6	10T	9T	FC6	10T	9T	OC6	10T	10B	ARU7	9B	ARU7	4B	ARU7	5B	37	ARU7

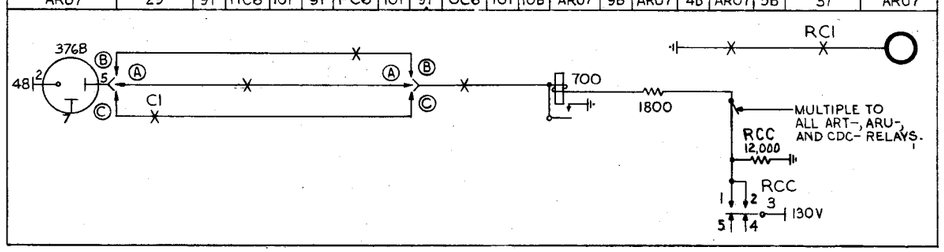

DECODER CONNECTOR CKT.	SD-68339-01, ISS. 4
DECODER CKT.	SD-68340-01, ISS. 8
TRANSLATOR CONNECTOR CKT.	SD-68341-01, ISS. 6
CARD TRANSLATOR CKT.	SD-68342-01, ISS. 6
MARKER CKT.	SD-68388-01, ISS. 7
MARKER CONNECTOR CKT.	SD-68395-01, ISS. 5

DECODER
READING CARD TRANSLATOR OUTPUT

NO. 4M TOLL

2 SHEETS, SHEET 2

OS 164-1

SEQUENCE CHART

AVAILABILITY OF DF TRANS.

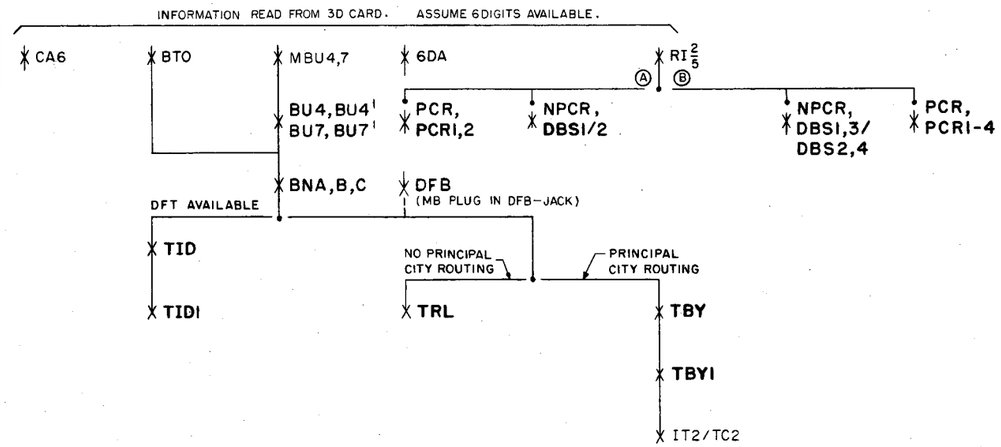

AVAILABILITY OF FA TRANS.

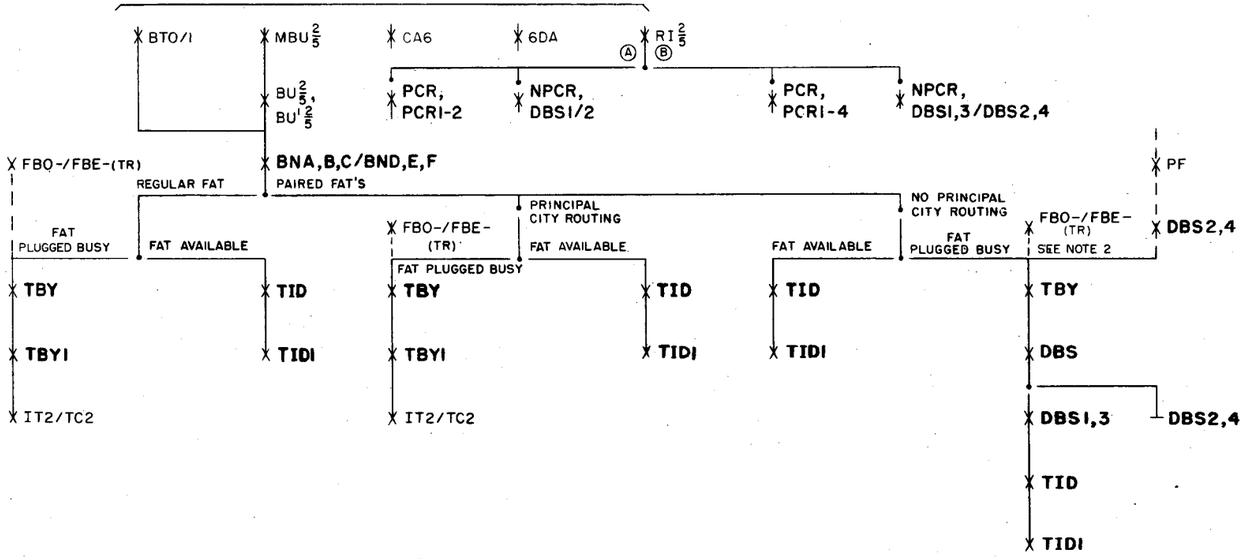

DECODER

CARD TRANSLATOR AVAILABILITY CHECK

OS 165-1

3 SHEETS, SHEET 1

NO. 4A OR 4M TOLL

ORDER AS BSP ITEM MP-11607

MISC. CKT. TROUBLE RECORDER

FIG. C

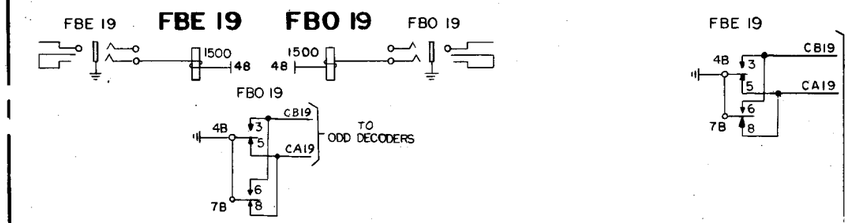

FIG. D

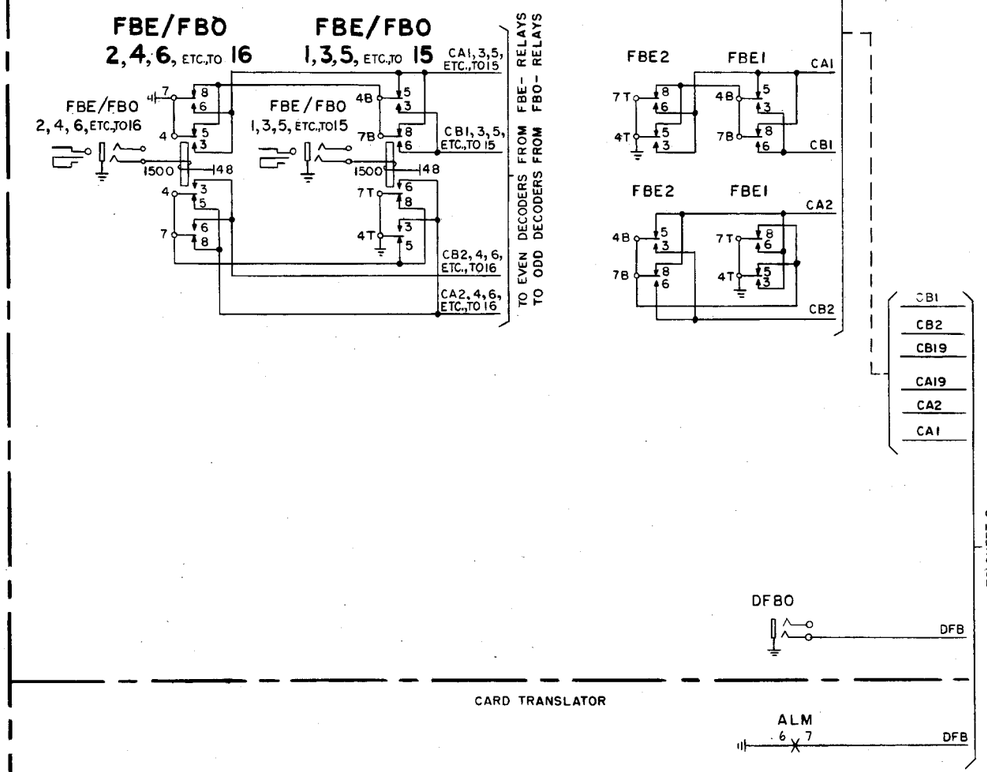

ISSUE	1	A.S.M. E.B.B.	2	M.L.H. A.E.C.
DATE	7-3-51		10-1-53	

3 SHEETS, SHEET 1

MP-11607

BELL TELEPHONE LABORATORIES, INC.

PRINTED IN U. S. A.

MP-11607 3 SHEETS, SHEET 2

ISSUE		
DATE		
7-3-51	1	A.S.M. R.B.B.
10-1-53	2	M.K.M. A.C.C.

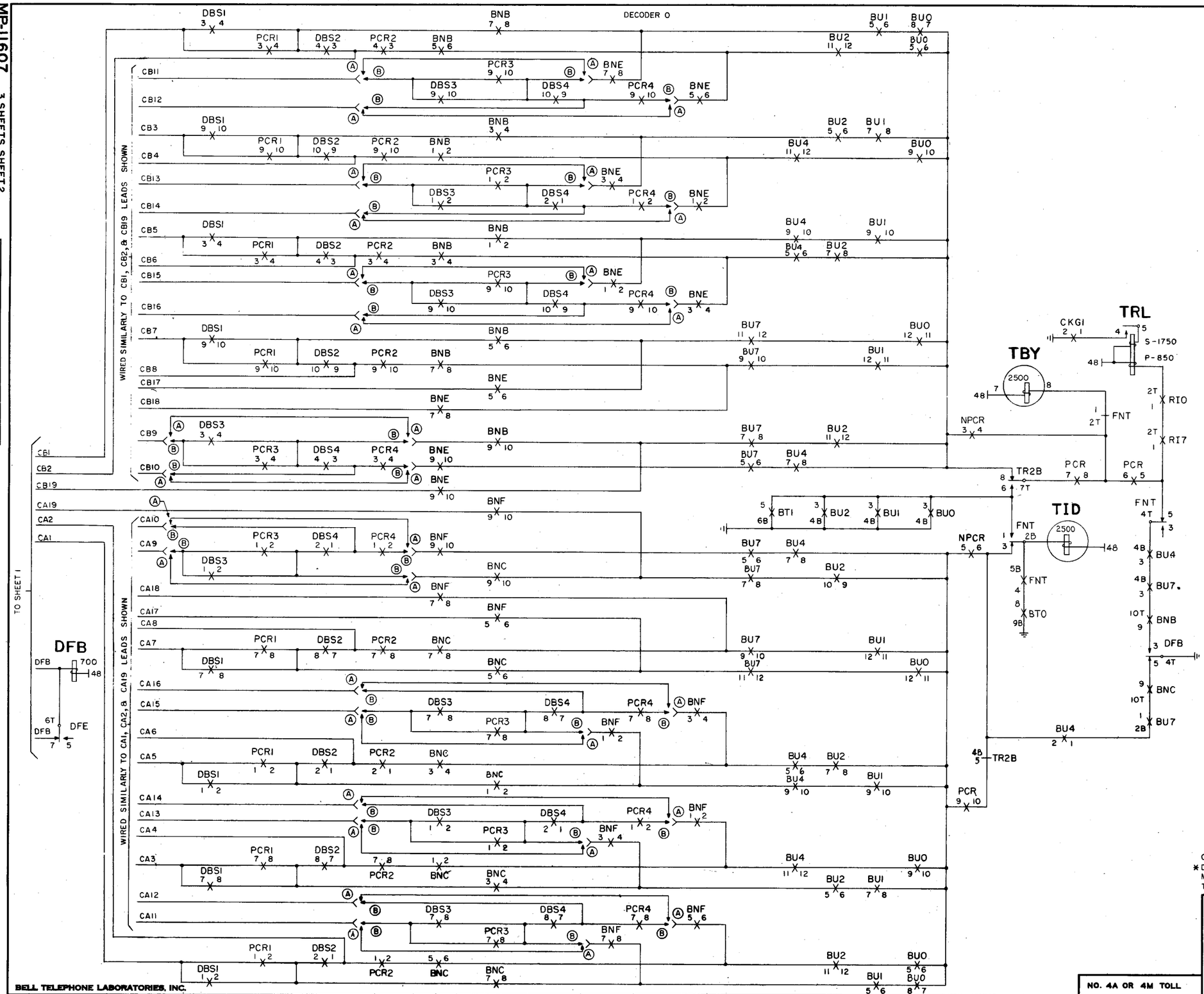

NOTES:

1.

OS OPTION	FEATURE OR OPTION	SD OPTION	SD
A	WHEN BOXES 1-8 ARE PAIRED	FIG. C	68340-01
B	WHEN BOXES 1-16 ARE PAIRED	FIG. C & D	
FIG. C	TO MAKE A NON-PAIRED TRANSLATOR BUSY TO ALL EVEN, ALL ODD, OR ALL DECODERS	FIG. 33	68392-01
FIG. D	TO MAKE EITHER ONE OF A PAIR OF TRANSLATORS BUSY TO ALL EVEN, ALL ODD, OR ALL DECODERS	FIG. 66	68392-01

CARD TRANSLATOR CIRCUIT	SD-68342-01, ISS. 6
* DECODER CIRCUIT	SD-68340-01, ISS. 8
MISC. CKT. TBL. RECORDER FRAME	SD-68392-01, ISS. 5
TRANSLATOR CONN. CKT.	SD-68341-01, ISS. 6

DECODER
CARD TRANSLATOR AVAILABILITY CHECK

NO. 4A OR 4M TOLL

3 SHEETS, SHEET 2

OS 165-1

BELL TELEPHONE LABORATORIES, INC.
PRINTED IN U. S. A.
ORDER AS BSP ITEM MP-11607

MP-11607 3 SHEETS, SHEET 3

ISSUE		
DATE		
1-3-51	1	E.S.H. R.S.L.
10-1-53	2	K.C.K. R.E.C.

DECODER

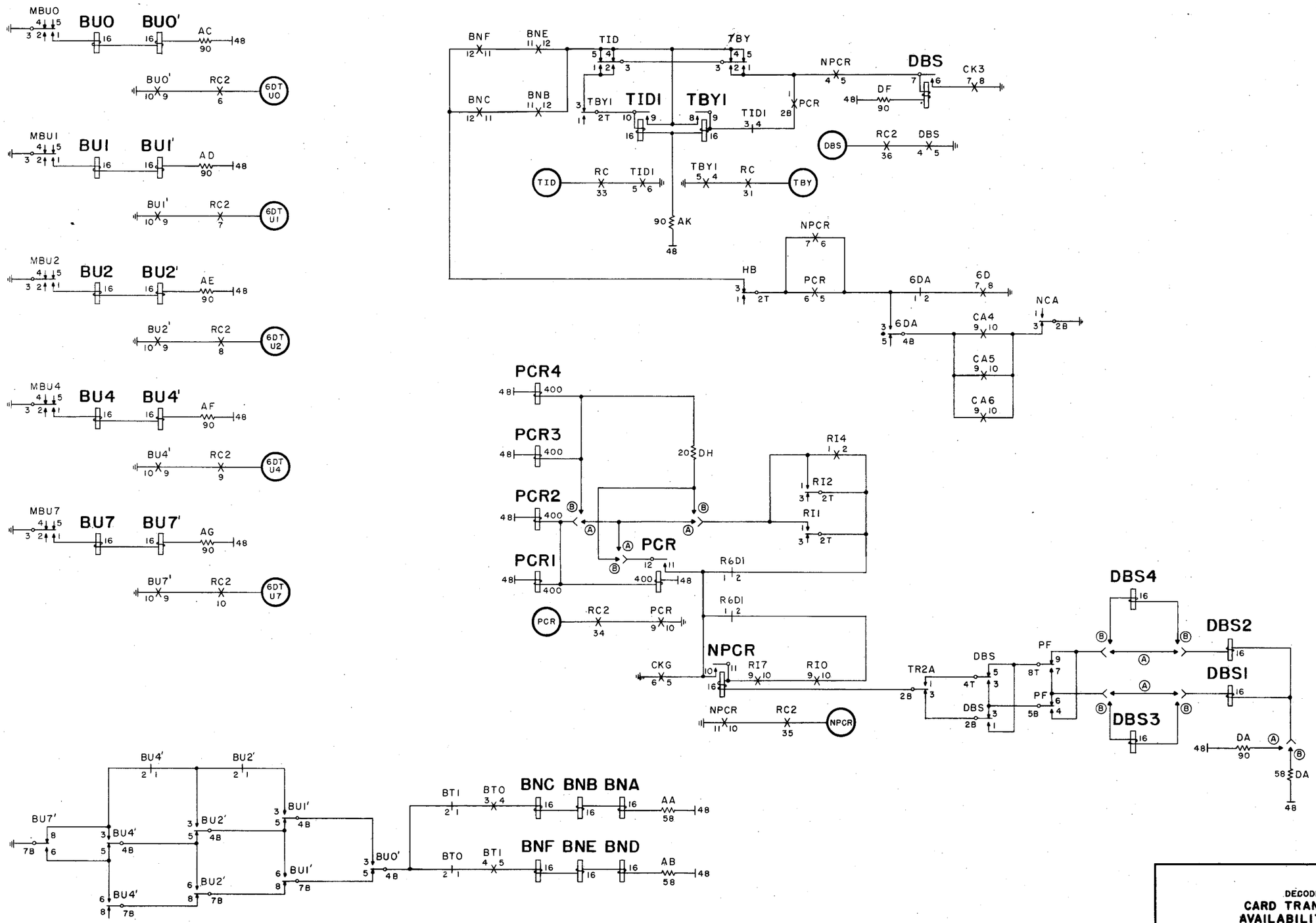

DECODER
CARD TRANSLATOR
AVAILABILITY CHECK

NO. 4A OR 4M TOLL

3 SHEETS, SHEET 3

OS 165-1

MP-11608

ISSUE	DATE
1	6-27-51
2	7-8-55

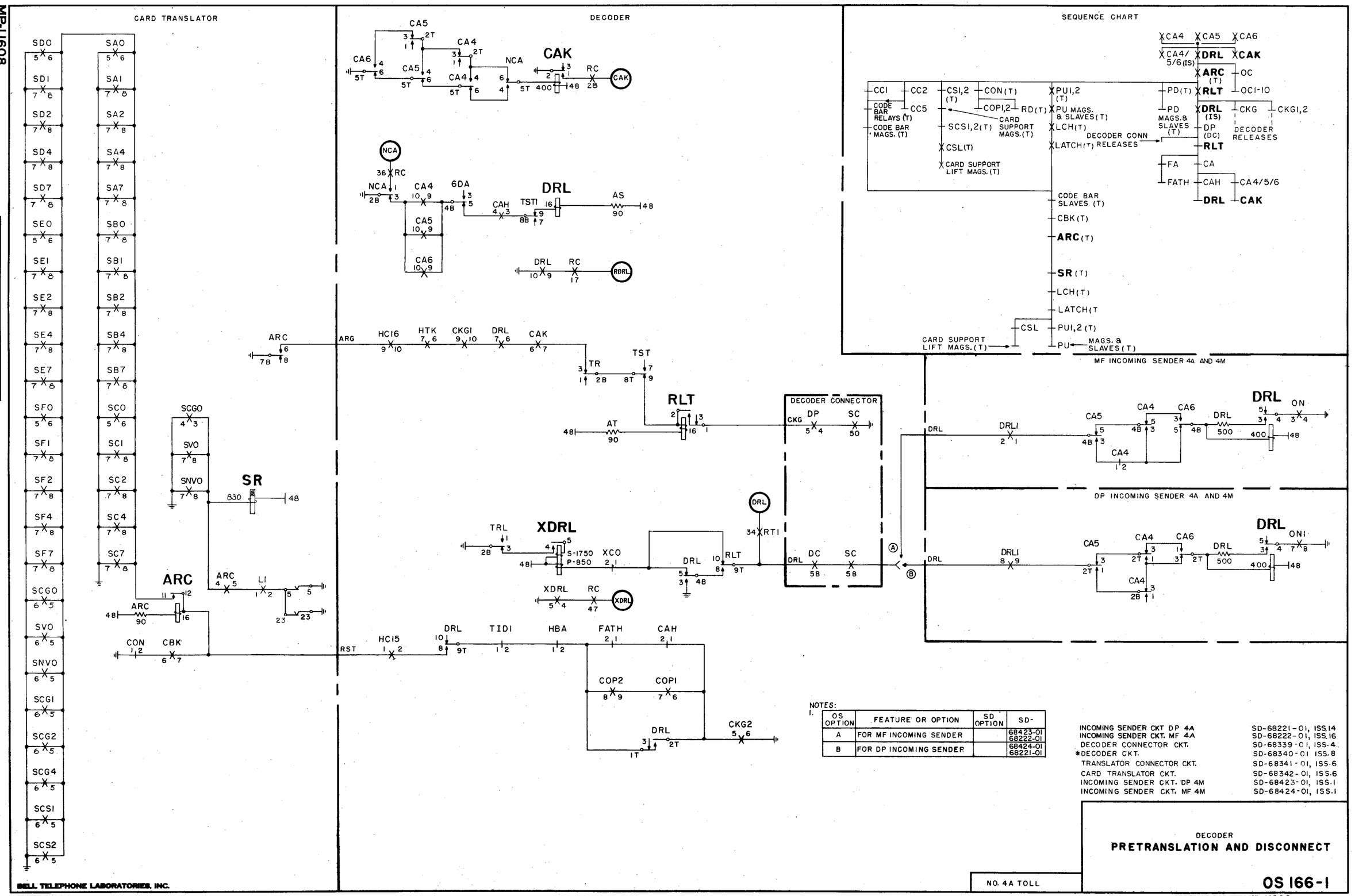

NOTES:
1.

OS OPTION	FEATURE OR OPTION	SD OPTION	SD-
A	FOR MF INCOMING SENDER		68423-01 68222-01
B	FOR DP INCOMING SENDER		68424-01 68221-01

INCOMING SENDER CKT DP 4A	SD-68221-01, ISS.14
INCOMING SENDER CKT. MF 4A	SD-68222-01, ISS.16
DECODER CONNECTOR CKT.	SD-68339-01, ISS.4
*DECODER CKT.	SD-68340-01 ISS.8
TRANSLATOR CONNECTOR CKT.	SD-68341-01, ISS.6
CARD TRANSLATOR CKT.	SD-68342-01, ISS.6
INCOMING SENDER CKT. DP 4M	SD-68423-01, ISS.1
INCOMING SENDER CKT. MF 4M	SD-68424-01, ISS.1

DECODER

PRETRANSLATION AND DISCONNECT

NO. 4A TOLL

OS 166-1

BELL TELEPHONE LABORATORIES, INC.
PRINTED IN U.S.A.
ORDER AS BSP ITEM MP-11608

6 DIGIT TRANSLATION IN HOME CARD TRANSLATOR
FOF, FRO, FMB, FST

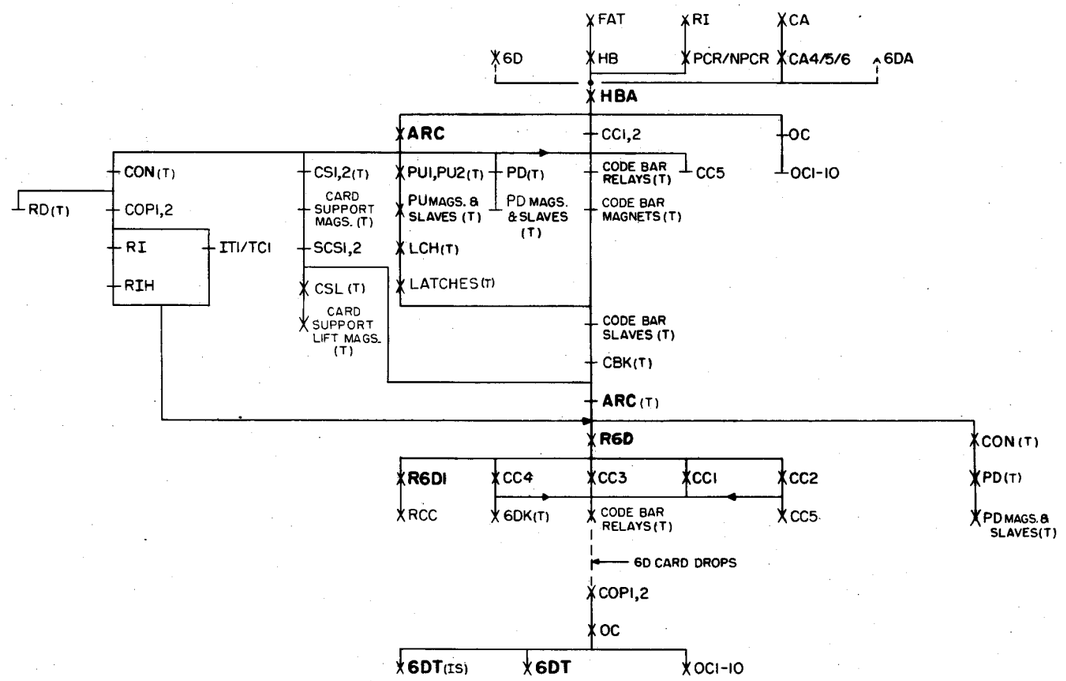

6 DIGIT TRANSLATION IN DECODER FOREIGN TRANSLATOR
FOF, FRO, FMB, FST

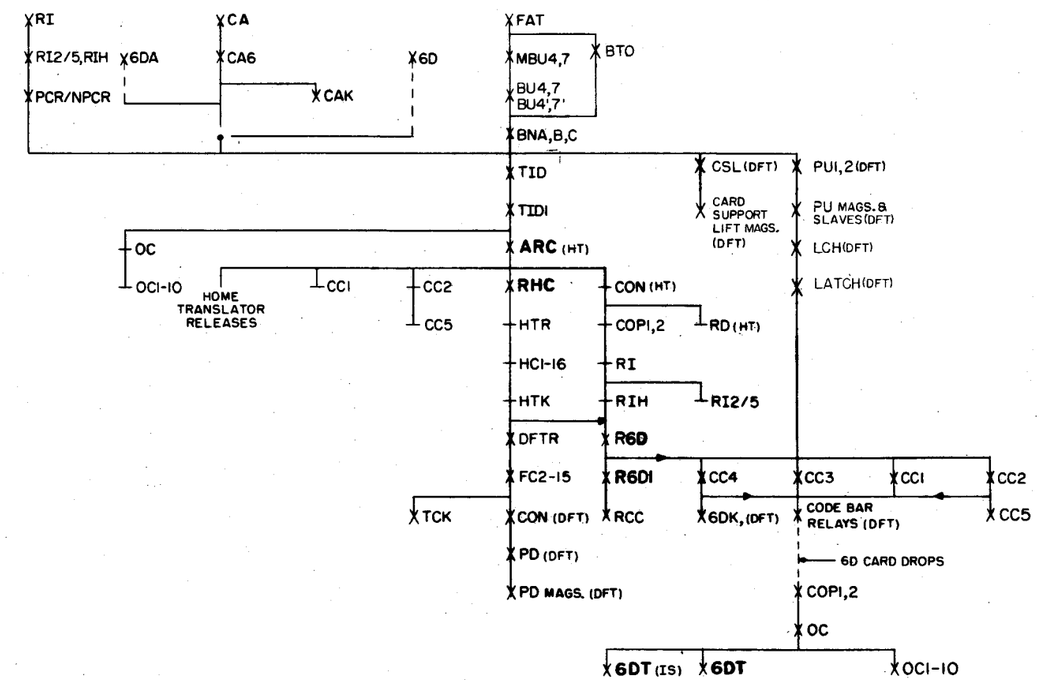

3 DIGIT TRANSLATION
FOF, FRO, FMB, FST

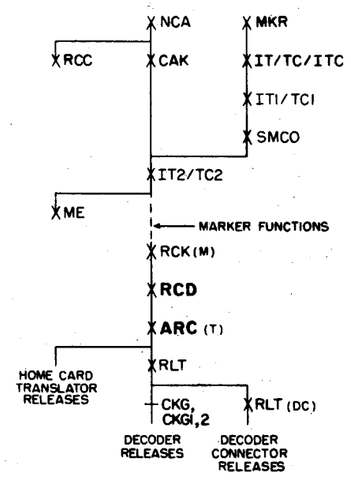

DECODER
3-AND 6-DIGIT TRANSLATION
FOF, FRO, FMB, FST

OS 167-1

2 SHEETS, SHEET 1

NO. 4A OR 4M TOLL

ORDER AS BSP ITEM MP-11609

ISSUE	2	M.J.N.
DATE		8-18-53

2 SHEETS, SHEET 1

MP-11609

BELL TELEPHONE LABORATORIES, INC.

PRINTED IN U. S. A.

MP-11609 2 SHEETS, SHEET 2

ISSUE	DATE
1	6-21-51
2	8-18-53

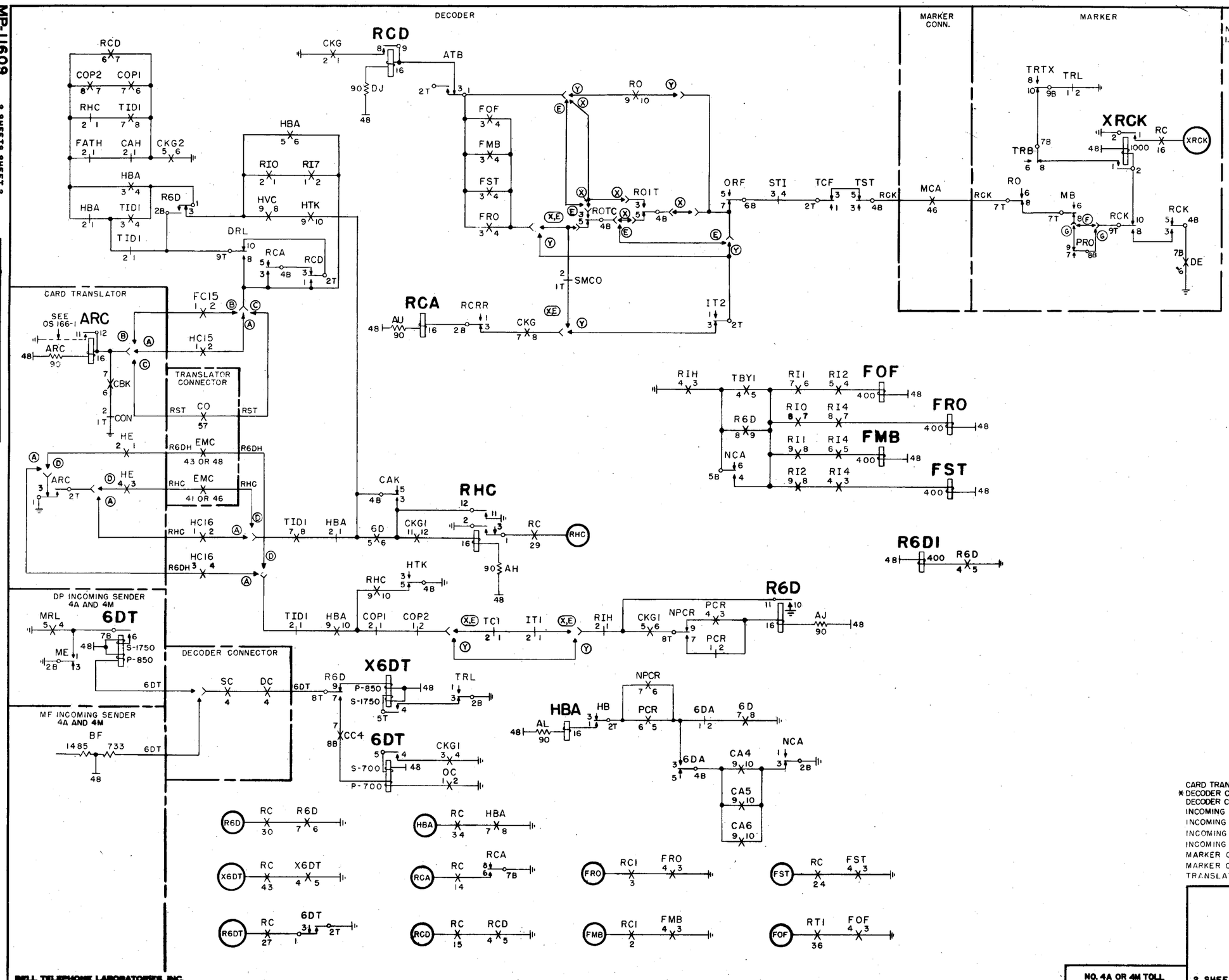

NOTES:

OS OPTION	FEATURE OR OPTION			SD OPTION	SD
X	SEPARATE TRAIN OPERATION			X, FIG. A	68340-01
Y	COMBINED TRAIN OPERATION			Y, FIG. B	
A	HOME TRNSL.			FIG. 14	68340-01
				Y	68340-01
B	DECODER FOREIGN TRNSL.			FIG. 15	68340-01
C	FOREIGN TRNSL.			Z	68341-01
D	EMERGENCY TRNSL.			Y, FIG. 3	
E	SEPARATE TRAIN COMBINED OPERATION			R, FIG. E	68340-01
F	INTER-SENDER LOAD CONTROL TIMING	NOT PROVIDED		FIG. A	68388-01
G		PROVIDED	ROUTE TO REGULAR GROUP OF MASTER BUSY TRUNKS	FIG. B	
			ROUTE TO OVERLOAD ANN. TRK. OR SEP. GRP OF MASTER BUSY TRKS. OR TO OTHER TRKS.		

CARD TRANSLATOR CKT.	SD-68342-01, ISSUE 6
* DECODER CKT.	SD-68340-01, ISSUE 8
DECODER CONN. CKT.	SD-68339-01, ISSUE 4
INCOMING SENDER DP CKT. 4A	SD-68221-01, ISSUE 14
INCOMING SENDER DP CKT. 4M	SD-68423-01, ISSUE 2
INCOMING SENDER MF CKT. 4A	SD-68222-01, ISSUE 16
INCOMING SENDER MF CKT. 4M	SD-68424-01, ISSUE 4
MARKER CKT.	SD-68388-01, ISSUE 7
MARKER CONN. CKT.	SD-68395-01, ISSUE 5
TRANSLATOR CONN. CKT.	SD-68341-01, ISSUE 6

DECODER

3-AND 6-DIGIT TRANSLATION

FOF, FRO, FMB, FST

NO. 4A OR 4M TOLL

2 SHEETS, SHEET 2

OS 167-1

BELL TELEPHONE LABORATORIES, INC.
PRINTED IN U. S. A.
ORDER AS BSP ITEM MP-11609

NOTES:

1.

OS OPTION	FEATURE OR OPTION	SD OPTION	SD
A	SEPARATE TRAIN OPERATION	FIG. A	68340-01
B	COMB. TRAIN OPERATION	FIG. B	
C	INTERTOLL MARKERS		68395-01
D	TOLL COMPLETING MARKERS		68395-01
E	SEPARATE TRAIN COMBINED OPERATION	FIG. E	68340-01
F	PRONOUNCEMENT REORDER PROVIDED	FIG. F	
G	PRONOUNCEMENT REORDER NOT PROVIDED	FIG. G	
J	COMB. TRAIN OPERATION PRONOUNCEMENT REORDER PROVIDED	FIG. B, FIG. F	68340-01
K	COMB. TRAIN OPERATION PRONOUNCEMENT REORDER NOT PROVIDED	FIG. B, FIG. G	68340-01
N	EVEN DECODERS	N, FIG. E	68340-01
Q	ODD DECODERS	Q, FIG. E	

2. IN SEPARATE TRAIN OPERATION, WHEN TRUNK APPEARS ON ONLY ONE TRAIN THE 10,000Ω GROUND IS APPLIED TO THE UNUSED SM-LEAD.

TABLE 1

INCOMING TRUNK APPEARANCE SEPARATE TRAIN OFFICE
X DENOTES RELAY OPERATED.

TRUNK CIRCUIT			DECODER RELAYS						
LEAD	OPTION SEE NOTE 2	CONDITION	SMI	SMC	SMI1	SMC1	SMI2	SMC2	INCOMING TRUNK APPEARANCE.
SMC	H	10,000Ω GRD.	X		X	X	X		INTERTOLL FRAME
SMI	NONE	GRD.							
SMC	NONE	GRD.		X	X	X		X	TOLL COMPL. FR.
SMI	R	10,000Ω GRD.							
SMC	NONE	GRD.	X	X	X	X	X	X	IT. & TOLL COMPL. FR.
SMI	NONE	GRD.							

TABLE 2

MARKER REQUIRED SEPARATE TRAIN OFFICE
X DENOTES RELAY OPERATED.

DECODER RELAYS									
REPRESENTING INCOMING TRUNK APPEARANCE		REPRESENTING OUTGOING TRUNK APPEARANCE			SELECTING TYPE OF MARKER		INDICATING MISMATCH		MARKER REQUIRED
SMI2	SMC2	IT	TC	ITC	IT1	TC1	ROIT	ROTC	
X		X			X				INTERTOLL
X			X		X		X		INTERTOLL
X				X	X				INTERTOLL
	X	X				X		X	TOLL COMPL.
	X		X			X			TOLL COMPL.
	X			X		X			TOLL COMPL.
X	X	X			X				INTERTOLL
X	X		X			X			TOLL COMPL.
X	X			X		X			TOLL COMPL.

SEQUENCE CHART
SEPARATE TRAIN OFFICE

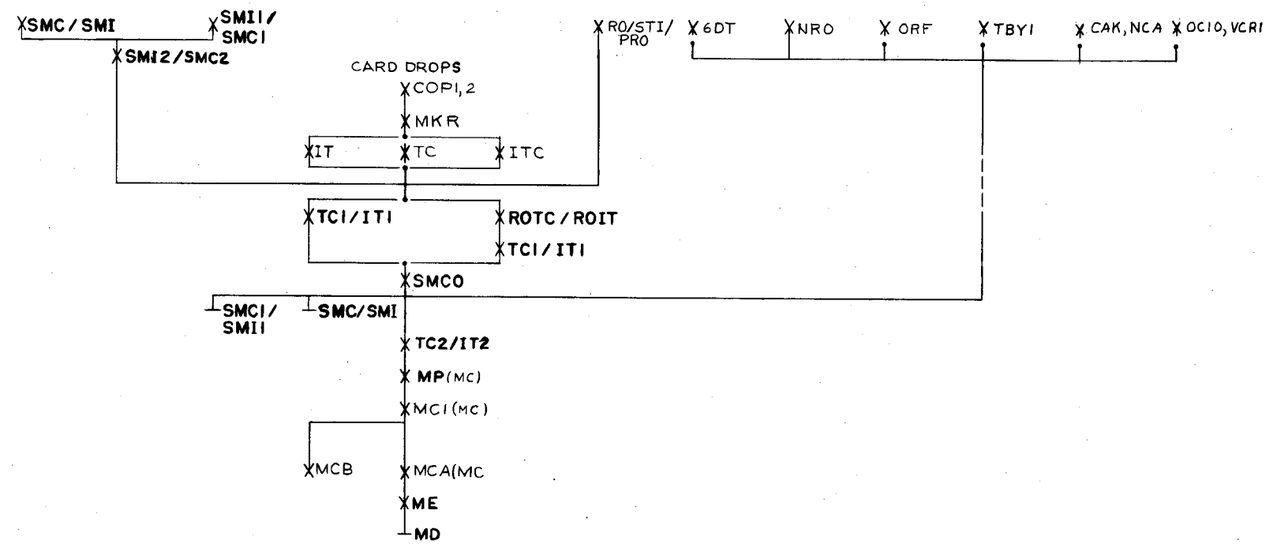

COMBINED TRAIN

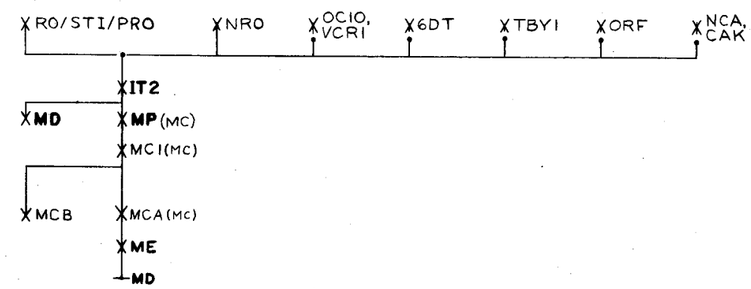

SEPARATE TRAIN
COMBINED OPERATION

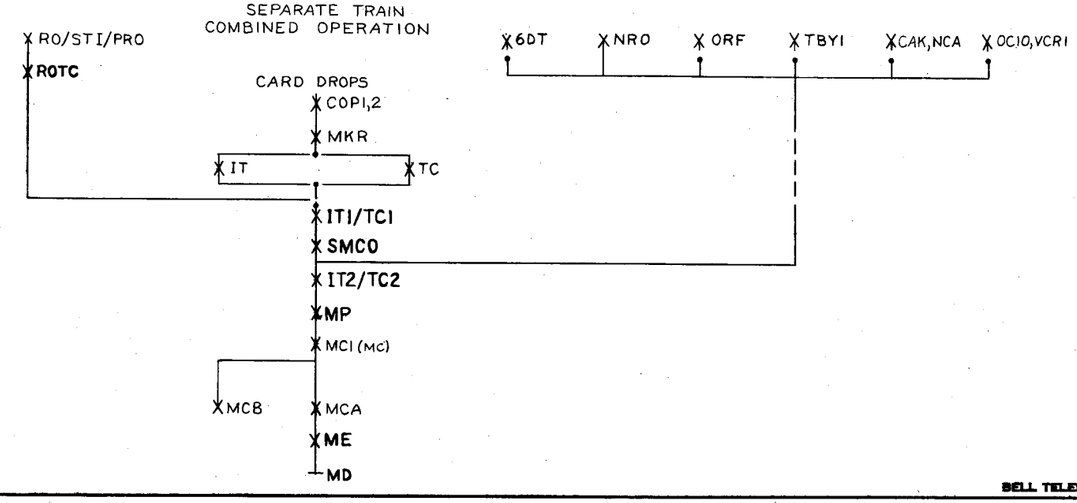

* DECODER CKT.	SD-68340-01,	ISS. 8
DECODER CONNECTOR CKT.	SD-68339-01,	ISS. 4
INCOMING LINK & CONN. CKT.	SD-68393-01,	ISS. 7
MARKER CONNECTOR CKT.	SD-68395-01,	ISS. 5
SENDER LINK & CONN. CKT.	SD-68334-01,	ISS. 13
TWO-WAY TRUNK CKT.	SD-68232-01,	ISS. 10

DECODER
MARKER SELECTION
COMBINED SEPARATE-TRAIN AND
SEPARATE TRAIN COMBINED OPERATION

OS 168-1

2 SHEETS, SHEET 1

NO. 4A TOLL

ORDER AS BSP ITEM MP-11610

ISSUE	1	2
DATE	6-25-51	7-7-53

2 SHEETS, SHEET 1

MP-11610

BELL TELEPHONE LABORATORIES, INC.

PRINTED IN U. S. A.

MP-11610

2 SHEETS, SHEET 2

ISSUE	1	2			
DATE	6-23-51	7-7-53			

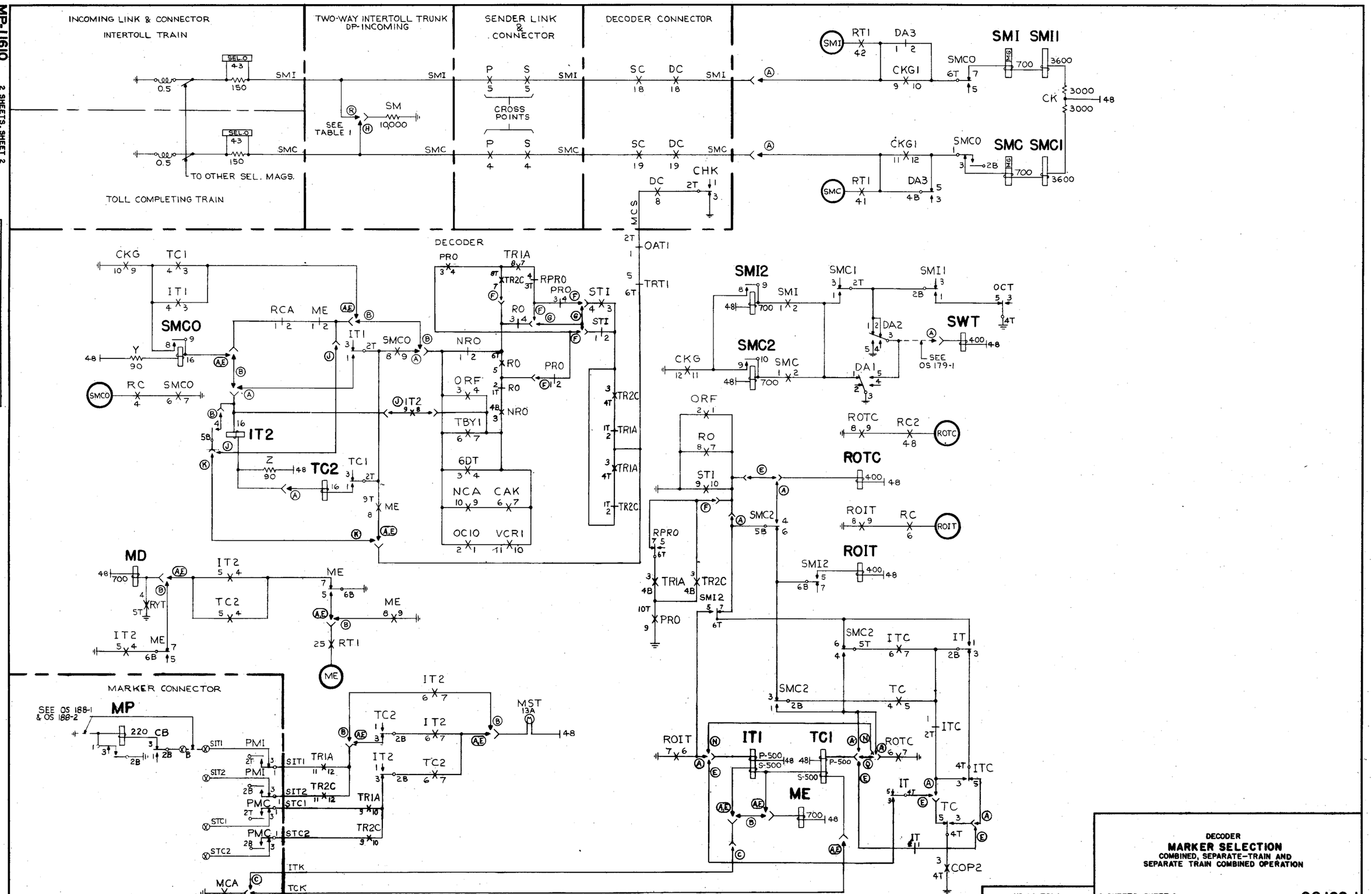

DECODER
MARKER SELECTION
COMBINED, SEPARATE-TRAIN AND SEPARATE TRAIN COMBINED OPERATION

NO. 4A TOLL

2 SHEETS, SHEET 2

OS 168-1

BELL TELEPHONE LABORATORIES, INC.

PRINTED IN U. S. A.

ORDER AS BSP ITEM MP-11610

ISSUE	DATE
1	6-21-51
2	6-23-53

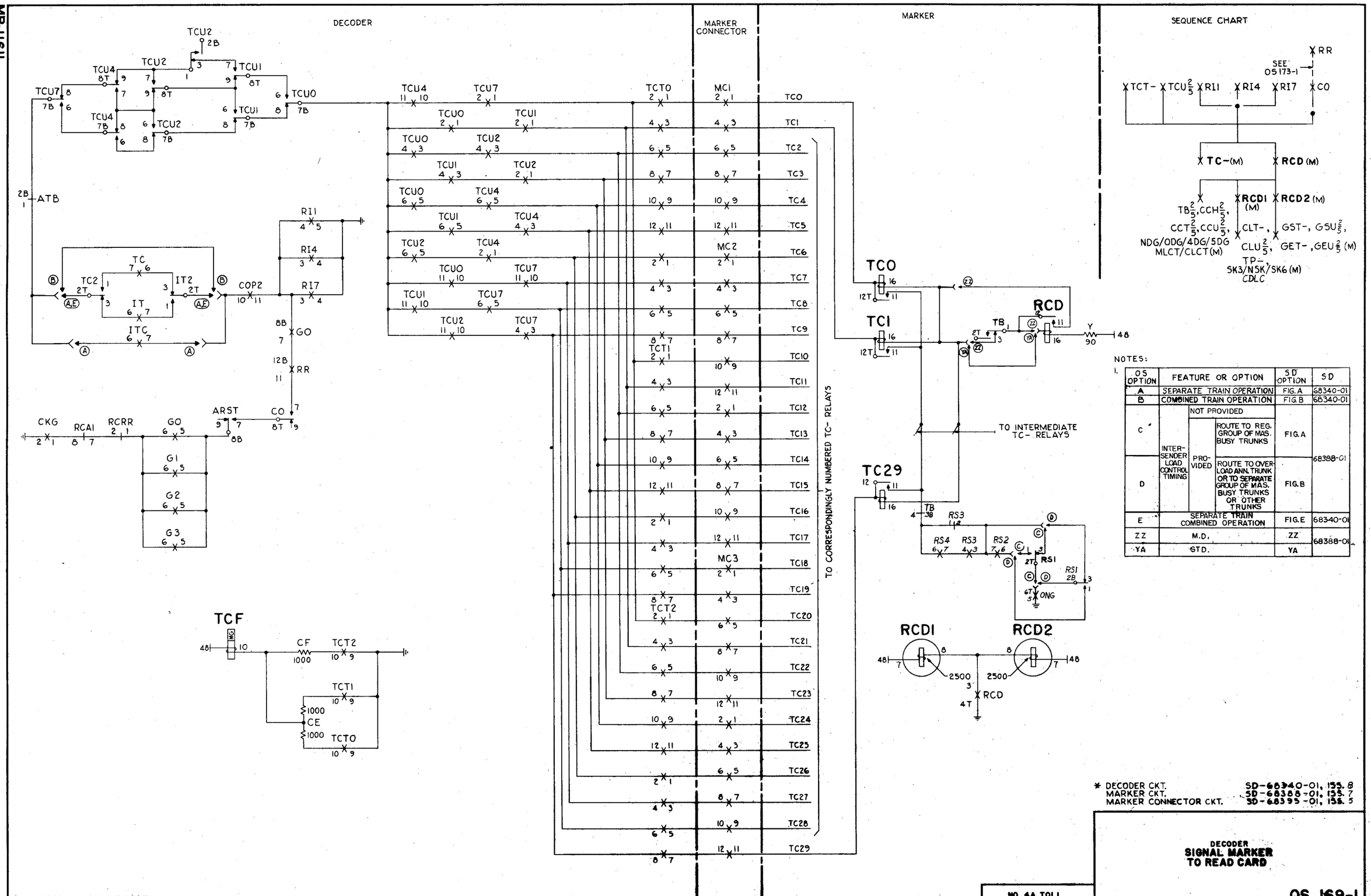

NOTES:

1.

OS OPTION	FEATURE OR OPTION			SD OPTION	SD
A	SEPARATE TRAIN OPERATION			FIG. A	68340-01
B	COMBINED TRAIN OPERATION			FIG. B	68340-01
C	INTER-SENDER LOAD CONTROL TIMING	NOT PROVIDED			
		PROVIDED	ROUTE TO REG. GROUP OF MAS. BUSY TRUNKS	FIG. A	68388-01
D			ROUTE TO OVERLOAD ANN. TRUNK OR TO SEPARATE GROUP OF MAS. BUSY TRUNKS OR OTHER TRUNKS	FIG. B	
E	SEPARATE TRAIN COMBINED OPERATION			FIG. E	68340-01
ZZ	M.D.			ZZ	68388-01
YA	STD.			YA	

* DECODER CKT. SD-68340-01, 155.8
MARKER CKT. SD-68388-01, 155.7
MARKER CONNECTOR CKT. SD-68395-01, 155.5

DECODER
SIGNAL MARKER TO READ CARD

NO. 4A TOLL

OS 169-1

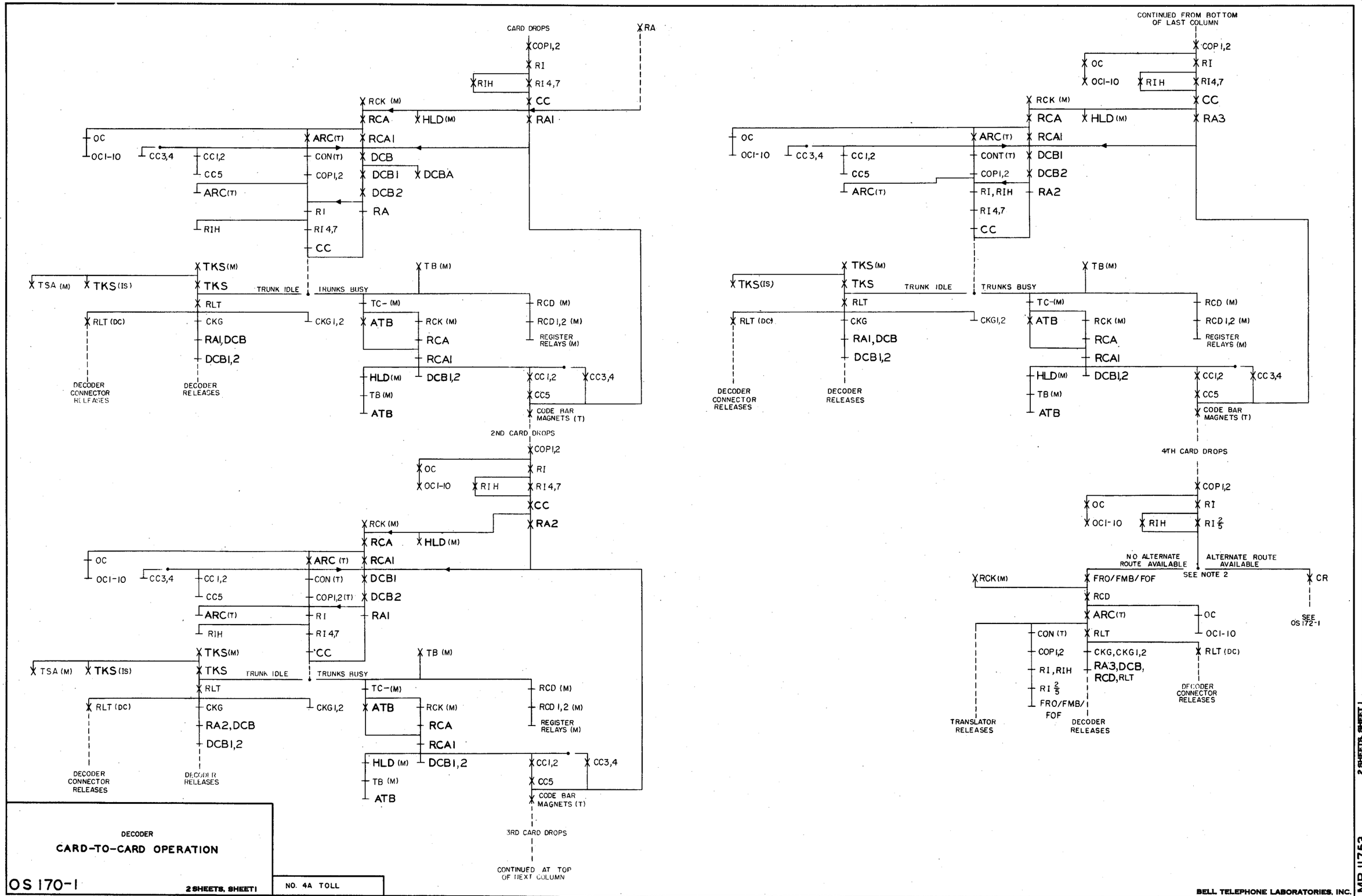

DECODER

CARD-TO-CARD OPERATION

OS 170-1

2 SHEETS, SHEET 1

NO. 4A TOLL

ORDER AS BSP ITEM MP-11753

ISSUE	1	2
	A.E.M.	R.C.C.
DATE	12-14-51	7-30-53

2 SHEETS, SHEET 1

MP-11753

BELL TELEPHONE LABORATORIES, INC.

PRINTED IN U. S. A.

MP-11753 2 SHEETS, SHEET 2

ISSUE	DATE	
1	12-14-51	ISS. 1 A.E.B.
2	7-30-59	ISS. 2 A.E.C.

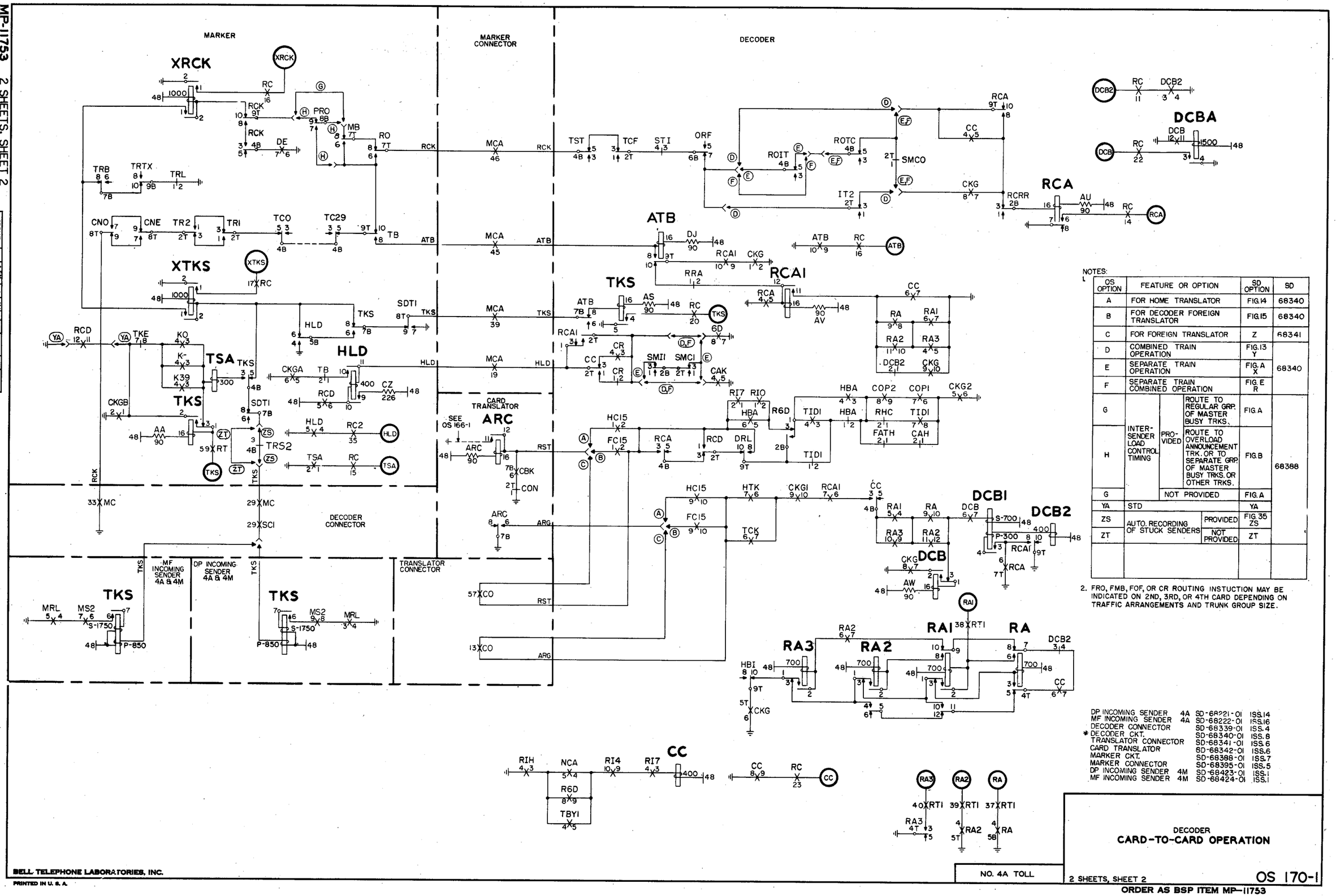

NOTES:
1.

OS OPTION	FEATURE OR OPTION			SD OPTION	SD
A	FOR HOME TRANSLATOR			FIG.14	68340
B	FOR DECODER FOREIGN TRANSLATOR			FIG.15	68340
C	FOR FOREIGN TRANSLATOR			Z	68341
D	COMBINED TRAIN OPERATION			FIG.13 Y	68340
E	SEPARATE TRAIN OPERATION			FIG. A X	
F	SEPARATE TRAIN COMBINED OPERATION			FIG. E R	
G	INTER-SENDER LOAD CONTROL TIMING	PROVIDED	ROUTE TO REGULAR GRP. OF MASTER BUSY TRKS.	FIG. A	68388
H			ROUTE TO OVERLOAD ANNOUNCEMENT TRK. OR TO SEPARATE GRP. OF MASTER BUSY TRKS. OR OTHER TRKS.	FIG. B	
G		NOT PROVIDED		FIG. A	
YA	STD			YA	
ZS	AUTO. RECORDING OF STUCK SENDERS	PROVIDED		FIG. 35 ZS	
ZT		NOT PROVIDED		ZT	

2. FRO, FMB, FOF, OR CR ROUTING INSTUCTION MAY BE INDICATED ON 2ND, 3RD, OR 4TH CARD DEPENDING ON TRAFFIC ARRANGEMENTS AND TRUNK GROUP SIZE.

DP INCOMING SENDER	4A	SD-68221-01	ISS.14
MF INCOMING SENDER	4A	SD-68222-01	ISS.16
DECODER CONNECTOR		SD-68339-01	ISS.4
* DECODER CKT.		SD-68340-01	ISS.8
TRANSLATOR CONNECTOR		SD-68341-01	ISS.6
CARD TRANSLATOR		SD-68342-01	ISS.6
MARKER CKT.		SD-68388-01	ISS.7
MARKER CONNECTOR		SD-68395-01	ISS.5
DP INCOMING SENDER	4M	SD-68423-01	ISS.1
MF INCOMING SENDER	4M	SD-68424-01	ISS.1

DECODER
CARD-TO-CARD OPERATION

NO. 4A TOLL

2 SHEETS, SHEET 2

OS 170-1

ORDER AS BSP ITEM MP-11753

BELL TELEPHONE LABORATORIES, INC.
PRINTED IN U. S. A.

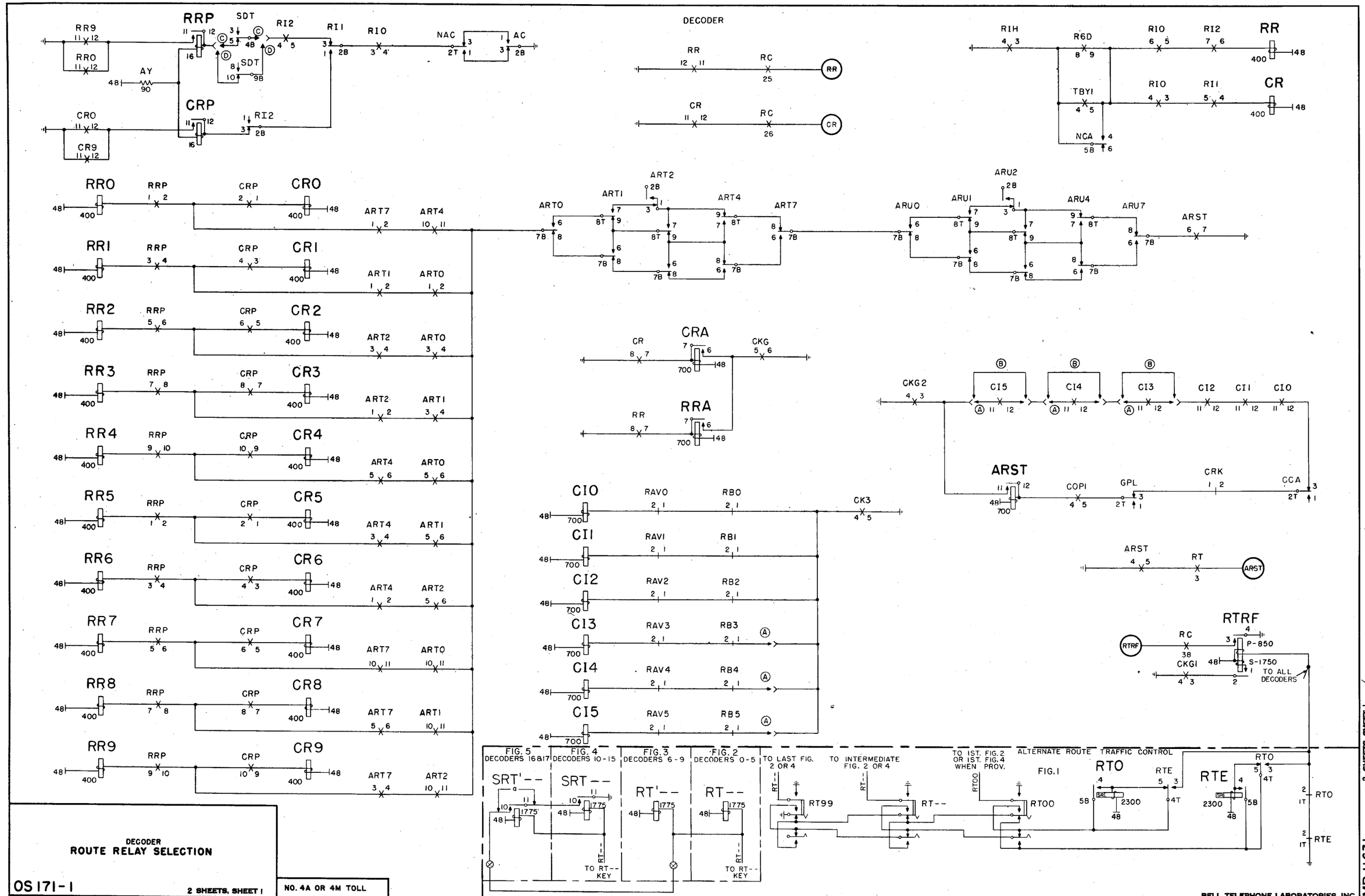
DECODER
ROUTE RELAY SELECTION
RRP
SDT
RI2
RI1
RI0
NAC
AC
RR9
RRO
AY
CRO
CR9
CRP
DECODER
RR
RC
CR
RIH
R6D
TBYI
NCA
RR
CR
RRO
RRP
CRP
CRO
RR1
CR1
RR2
CR2
RR3
CR3
RR4
CR4
RR5
CR5
RR6
CR6
RR7
CR7
RR8
CR8
RR9
CR9
ART7
ART4
ART1
ART0
ART2
ARU2
ARU0
ARU1
ARU4
ARU7
ARST
CRA
CKG
RRA
CKG2
CI5
CI4
CI3
CI2
CI1
CI0
COPI
GPL
CRK
CCA
RAV0
RAV1
RAV2
RAV3
RAV4
RAV5
RB0
RB1
RB2
RB3
RB4
RB5
CK3
RTRF
P-850
S-1750
CKGI
TO ALL DECODERS
FIG. 5 DECODERS 16&17
FIG. 4 DECODERS 10-15
FIG. 3 DECODERS 6-9
FIG. 2 DECODERS 0-5
TO LAST FIG. 2 OR 4
TO INTERMEDIATE FIG. 2 OR 4
TO 1ST. FIG. 2 OR 1ST. FIG. 4 WHEN PROV.
ALTERNATE ROUTE TRAFFIC CONTROL
FIG. 1
SRT'--
SRT--
RT'--
RT--
TO RT-- KEY
RT99
RTOO
RTO
RTE
2300
1775
ISSUE 1 2
DATE 7-5-51 9-9-53
2 SHEETS, SHEET 1
MP-11631
OS 171-1
2 SHEETS, SHEET 1
NO. 4A OR 4M TOLL
ORDER AS BSP ITEM MP-11631
BELL TELEPHONE LABORATORIES, INC.
PRINTED IN U. S. A.

MP-11631 2 SHEETS, SHEET 2

ISSUE		
1		
2		
DATE	7-7-71	9-15-73

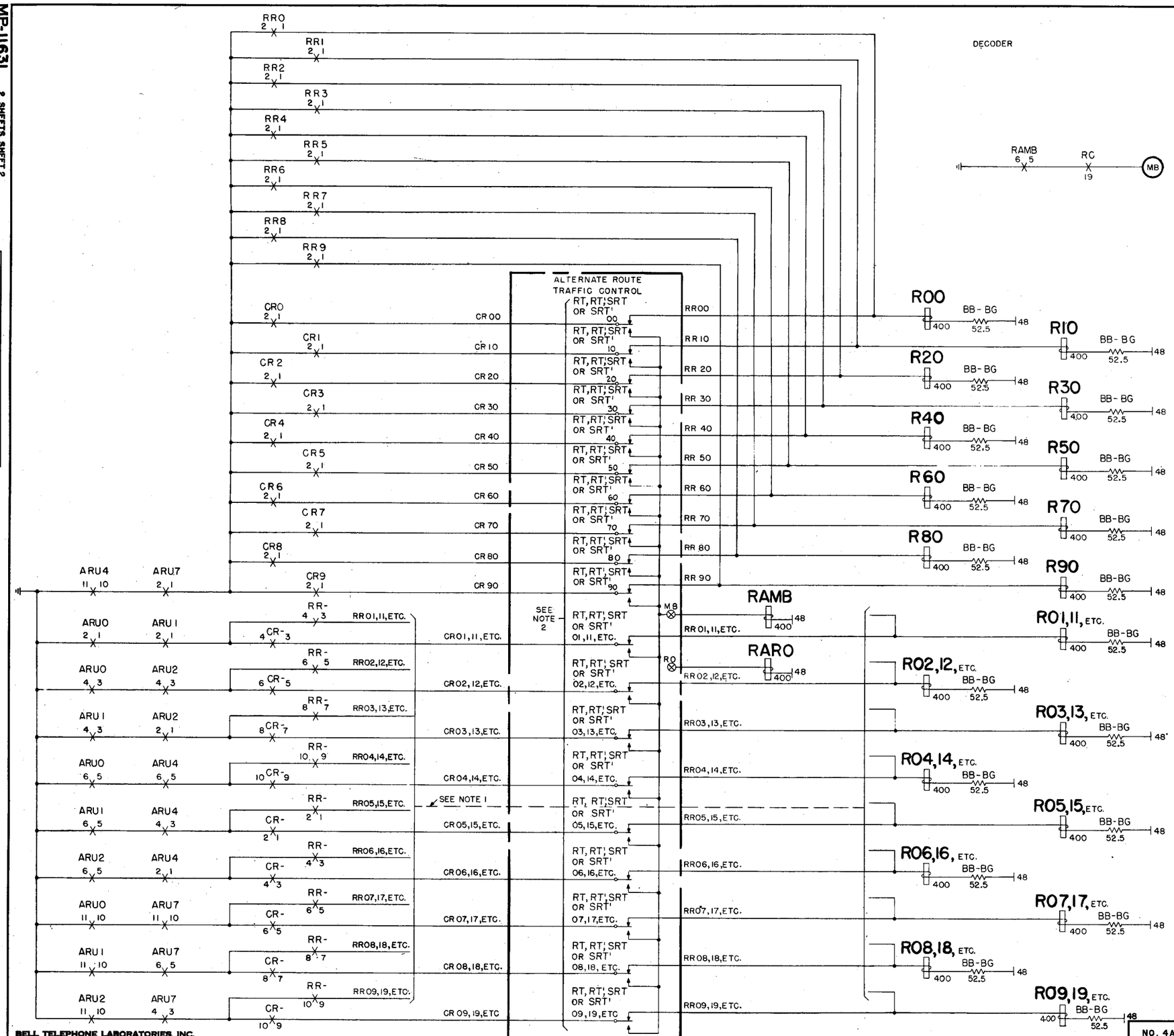

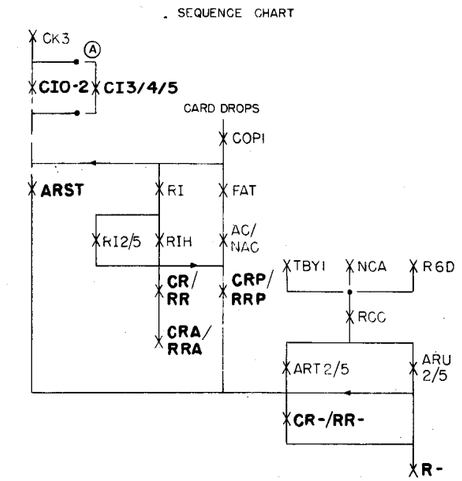

NOTES:
1. THESE LEADS CONNECT DIRECTLY TO CORRESPONDINGLY NUMBERED R- RELAYS IN MANNER SIMILAR TO R00, R10 ETC.
2. IN ALTERNATE ROUTE TRAFFIC CONTROL CIRCUIT, DECODERS 0-5 CONNECT TO RELAYS RT00-99, DECODERS 6-9 CONNECT TO RELAYS RT'00-99, DECODERS 10-15 CONNECT TO RELAYS SRT00-99, AND DECODERS 16-17 CONNECT TO RELAYS SRT'00-99.

DECODER	RELAY	LEADS MB	LEADS CR--	LEADS RR--
0	RT --	2B	1B	3B
1		4B	5B	6B
2		7B	8B	9B
3		2T	1T	3T
4		4T	5T	6T
5		7T	8T	9T
6	RT'--	2B	1B	3B
7		4B	5B	6B
8		7B	8B	9B
9		2T	1T	3T
10	SRT --	2B	1B	3B
11		4B	5B	6B
12		7B	8B	9B
13		2T	1T	3T
14		4T	5T	6T
15		7T	8T	9T
16	SRT'--	2B	1B	3B
17		4B	5B	6B

3.

OS OPTION	FEATURE OR OPTION	SD OPTION	SD
A	IF CI3,4,OR 5 RELAYS ARE REQUIRED		68340-01
B	IF CI3,4,OR 5 RELAYS ARE NOT REQUIRED		
C	M. D.	FIG. H	
D	STD.	FIG. J	

ALTERNATE ROUTE TRAFFIC CONTROL CKT. SD-68408-01, ISS.2
*DECODER CIRCUIT. SD-68340-01, ISS.8

DECODER

ROUTE RELAY SELECTION

NO. 4A OR 4M TOLL

2 SHEETS, SHEET 2

OS171-1

BELL TELEPHONE LABORATORIES, INC.
PRINTED IN U. S. A.
ORDER AS BSP ITEM MP-11631

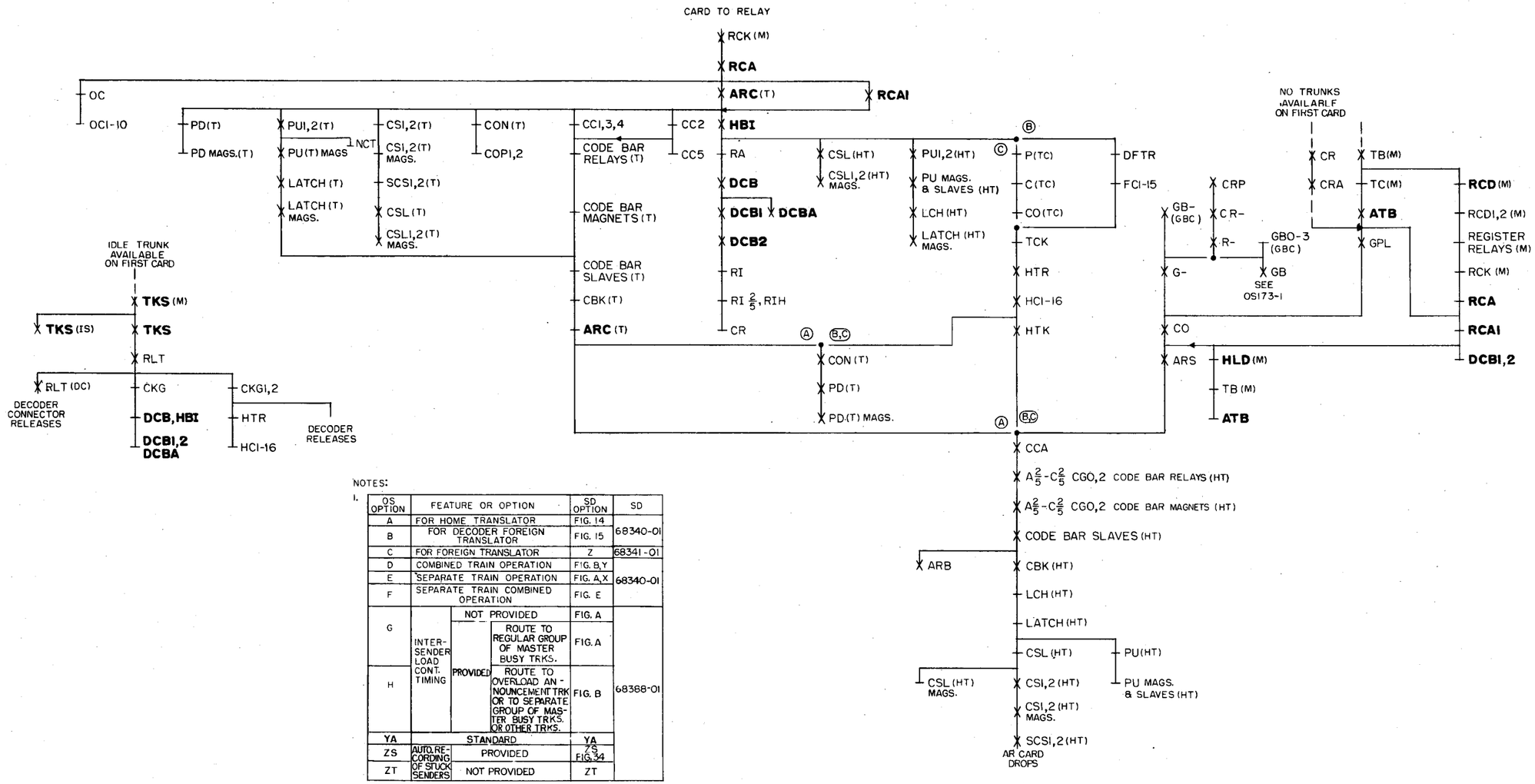

NOTES:

1.

OS OPTION	FEATURE OR OPTION			SD OPTION	SD
A	FOR HOME TRANSLATOR			FIG. 14	68340-01
B	FOR DECODER FOREIGN TRANSLATOR			FIG. 15	
C	FOR FOREIGN TRANSLATOR			Z	68341-01
D	COMBINED TRAIN OPERATION			FIG. B,Y	68340-01
E	SEPARATE TRAIN OPERATION			FIG. A,X	
F	SEPARATE TRAIN COMBINED OPERATION			FIG. E	
G	INTER-SENDER LOAD CONT. TIMING	NOT PROVIDED		FIG. A	68388-01
		PROVIDED	ROUTE TO REGULAR GROUP OF MASTER BUSY TRKS.	FIG. A	
H			ROUTE TO OVERLOAD ANNOUNCEMENT TRK OR TO SEPARATE GROUP OF MASTER BUSY TRKS. OR OTHER TRKS.	FIG. B	
YA	STANDARD			YA	
ZS	AUTO. RECORDING OF STUCK SENDERS	PROVIDED		ZS FIG. 34	
ZT		NOT PROVIDED		ZT	

CARD TRANSLATOR CKT.	SD-68342-01, ISS. 6
*DECODER CKT.	SD-68340-01, ISS. 8
DECODER CONNECTOR CKT.	SD-68339-01, ISS. 4
INCOMING SENDER CKT.-DP 4A	SD-68221-01, ISS. 14
INCOMING SENDER CKT.-DP 4M	SD-68423-01, ISS. 2
INCOMING SENDER CKT.-MF 4A	SD-68222-01, ISS. 16
INCOMING SENDER CKT.-MF. 4M	SD-68424-01, ISS. 4
MARKER CKT.	SD-68388-01, ISS. 7
MARKER CONNECTOR CKT.	SD-68395-01, ISS. 5
TRANSLATOR CONNECTOR CKT.	SD-68341-01, ISS. 6

DECODER

CARD-TO-RELAY AND RELAY-TO-RELAY OPERATIONS

OS 172-1

3 SHEETS, SHEET 1

NO. 4A OR 4M TOLL

ORDER AS BSP ITEM MP-11758

ISSUE	2
DATE	10-7-53

3 SHEETS, SHEET 1

MP-11758

BELL TELEPHONE LABORATORIES, INC.

PRINTED IN U. S. A.

MP-11758

3 SHEETS, SHEET 2

ISSUE	2	
DATE	10-7-69	

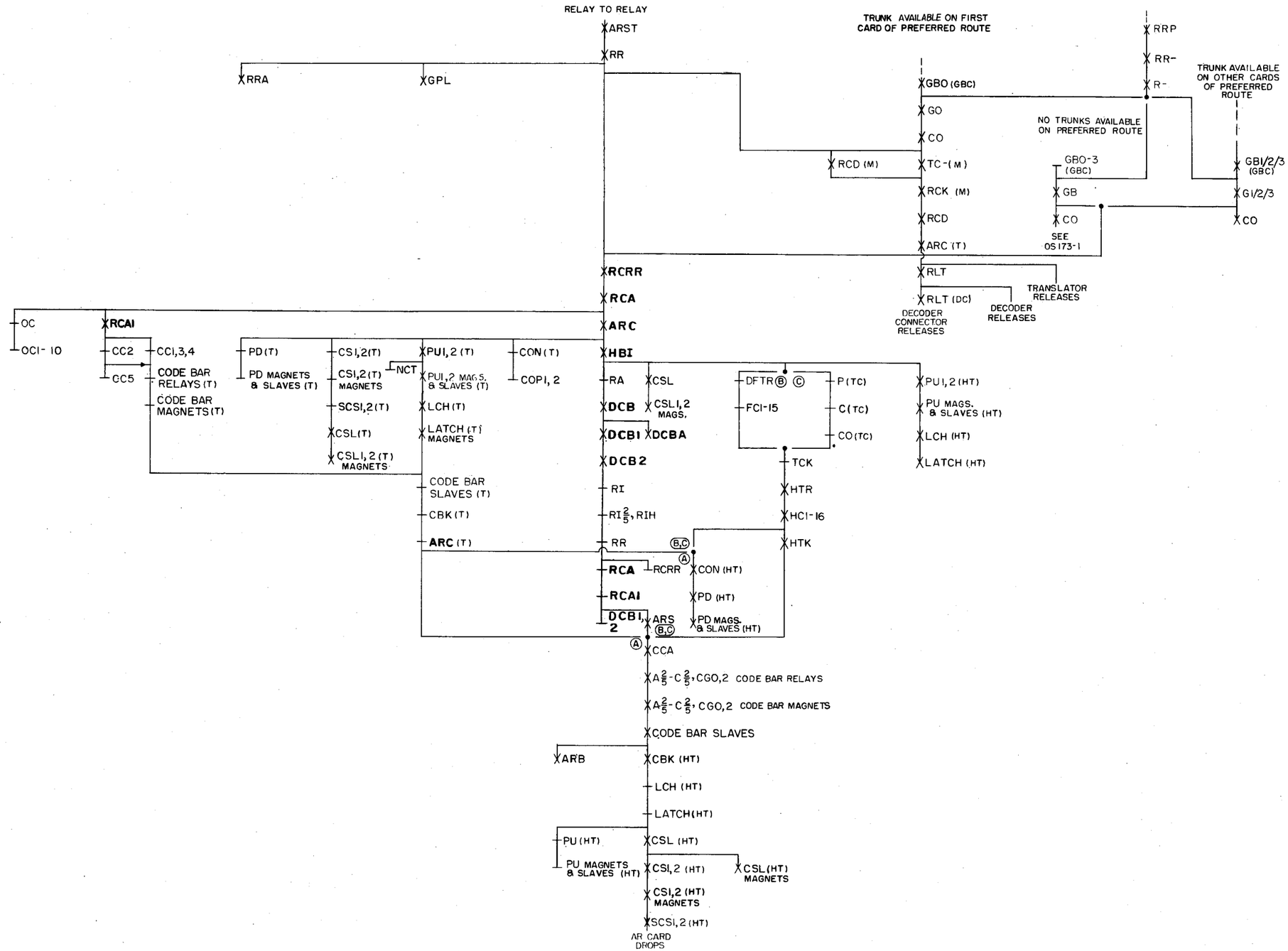

DECODER
CARD-TO-RELAY AND RELAY-TO-RELAY OPERATIONS

NO. 4A OR 4M TOLL

3 SHEETS, SHEET 2

OS 172-1

BELL TELEPHONE LABORATORIES, INC.

PRINTED IN U. S. A.

ORDER AS BSP ITEM MP-11758

MP-11758

3 SHEETS, SHEET 3

ISSUE	1	2
DATE	12-14-51	10-7-53

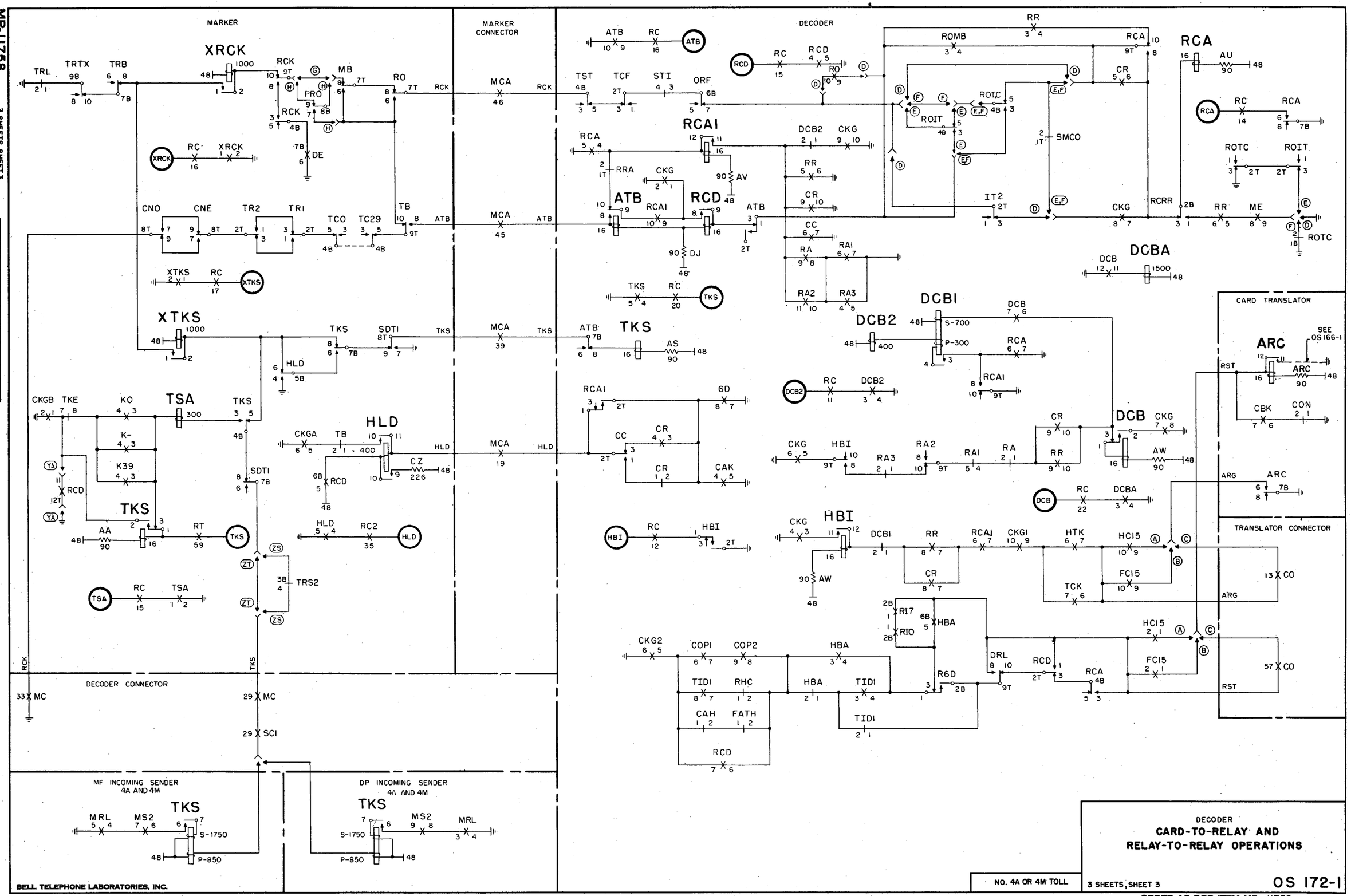

DECODER

CARD-TO-RELAY AND RELAY-TO-RELAY OPERATIONS

NO. 4A OR 4M TOLL

3 SHEETS, SHEET 3

OS 172-1

BELL TELEPHONE LABORATORIES, INC.

PRINTED IN U. S. A.

ORDER AS BSP ITEM MP-11758

NOTES:

1.

OS OPTION	FEATURE OR OPTION	SD OPTION	SD
A	LAST RELAY IN FINAL ROUTE TRUNK GROUPS	Z	68420-01
B	LAST RELAY IN NON-FINAL ROUTE (HIGH USAGE) TRUNK GROUPS	W	68420-01

2. NUMBERS IN PARENTHESIS FOR R-RELAYS INDICATE THE ARBITRARILY ASSIGNED GROUND SUPPLY ASSOCIATED WITH EACH R-RELAY.

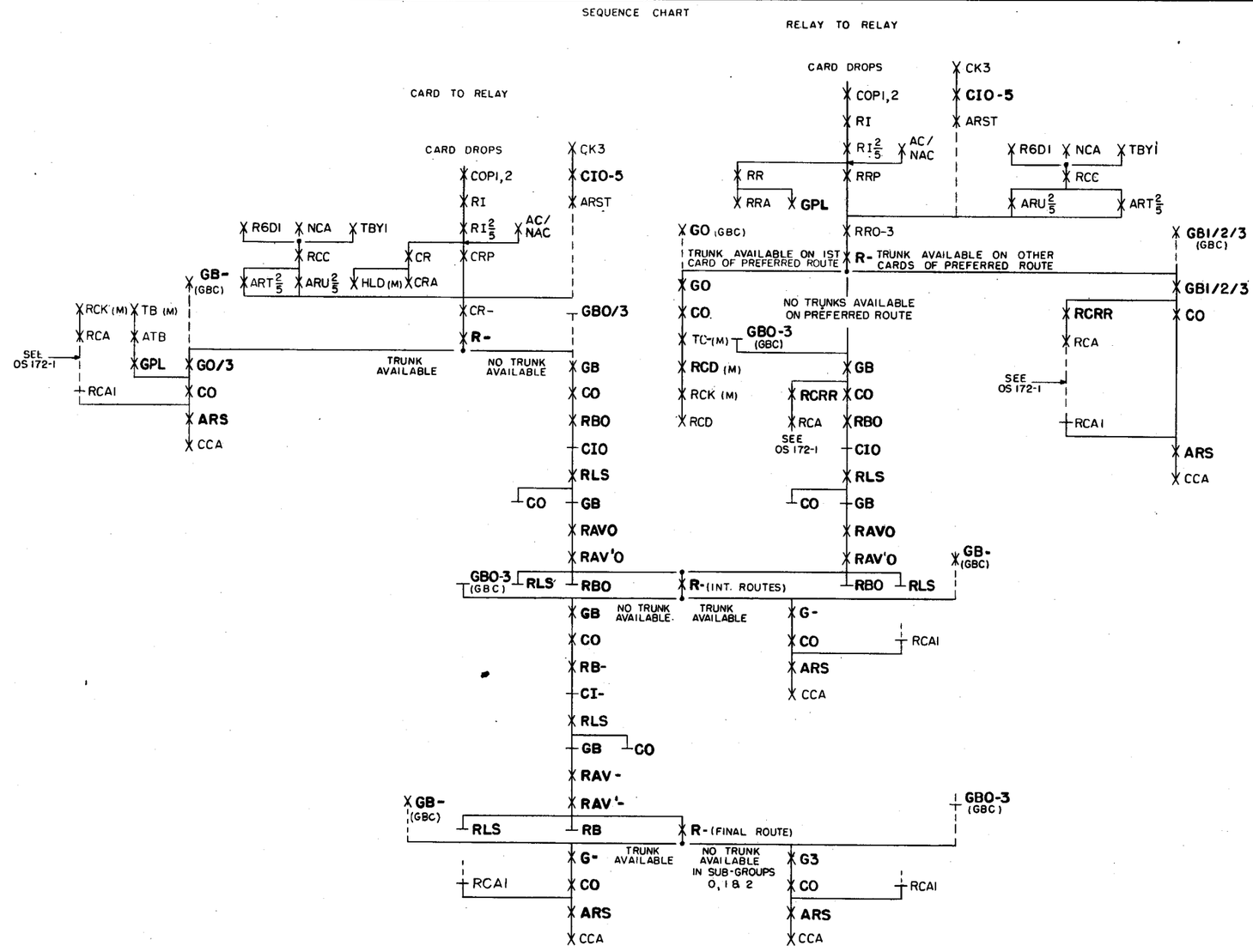

ALTERNATE ROUTE TRAFFIC CONTROL CKT. SD-68408-01, ISS. 2
*DECODER CKT. SD-68340-01, ISS. 8
GROUP CHAIN RELAY CKT. SD-68420-01, ISS. 4
TRUNK BLOCK CONNECTOR CKT. SD-68027-01, ISS. 19

DECODER
ROUTE RELAY TREE AND GROUND SUPPLIES

OS 173-1 2 SHEETS, SHEET 1

NO. 4A TOLL

ORDER AS BSP ITEM MP-11757

BELL TELEPHONE LABORATORIES, INC.

PRINTED IN U. S. A.

MP-11757 2 SHEETS, SHEET 1

ISSUE	2	M.J.N. K.E.C.
DATE	8-5-53	

MP-11757

2 SHEETS, SHEET 2

ISSUE	DATE	
1	12-14-51	K.S.K. E.B.B.
2	8-3-53	H.H.N. R.F.C.

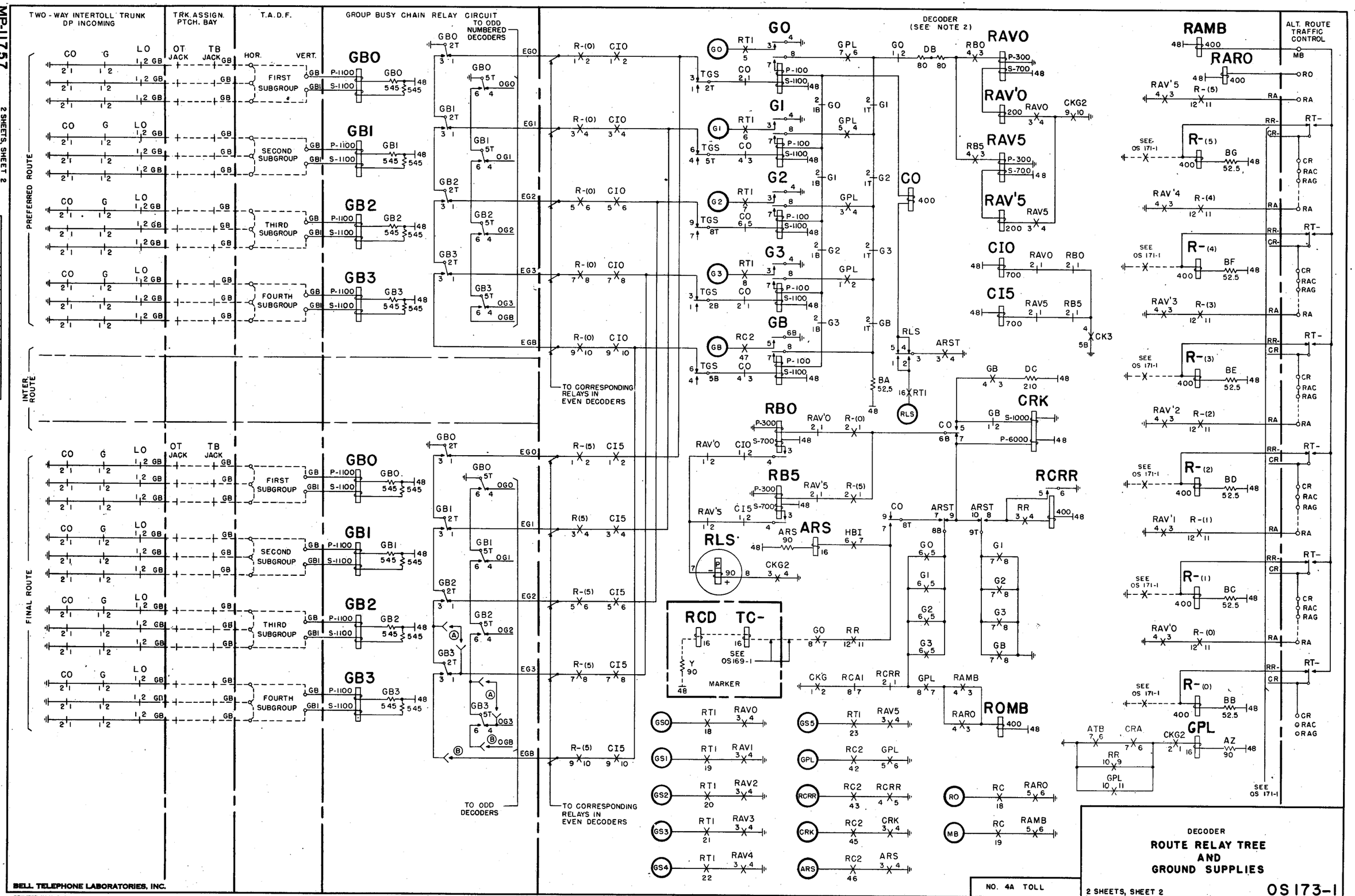

MP-11630

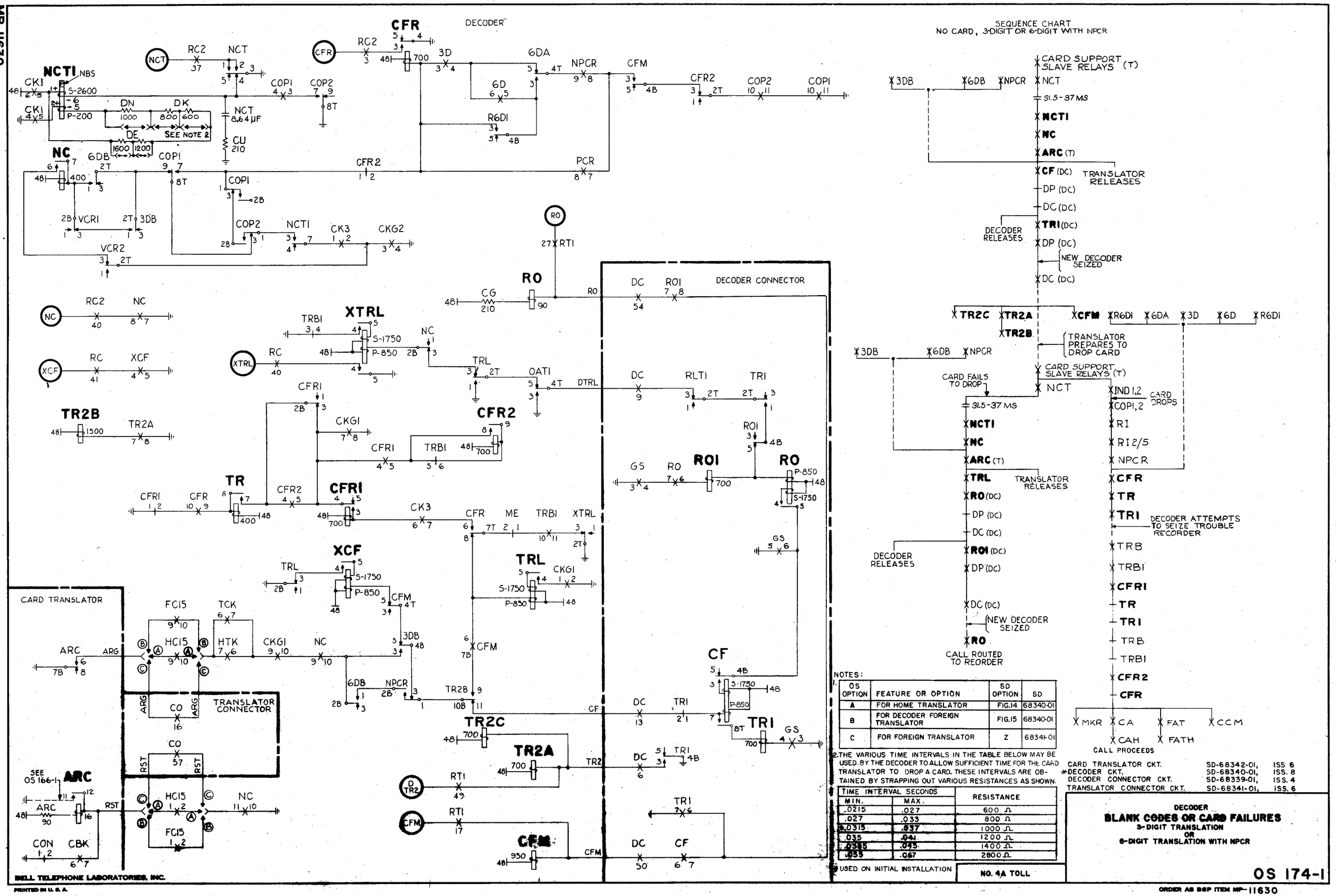

NOTES:

1.

OS OPTION	FEATURE OR OPTION	SD OPTION	SD
A	FOR HOME TRANSLATOR	FIG.14	68340-01
B	FOR DECODER FOREIGN TRANSLATOR	FIG.15	68340-01
C	FOR FOREIGN TRANSLATOR	Z	68341-01

2. THE VARIOUS TIME INTERVALS IN THE TABLE BELOW MAY BE USED BY THE DECODER TO ALLOW SUFFICIENT TIME FOR THE CARD TRANSLATOR TO DROP A CARD. THESE INTERVALS ARE OBTAINED BY STRAPPING OUT VARIOUS RESISTANCES AS SHOWN.

TIME INTERVAL SECONDS MIN.	MAX.	RESISTANCE
.0215	.027	600 Ω
.027	.033	800 Ω
*.0315	.037	1000 Ω
.035	.041	1200 Ω
.0385	.045	1400 Ω
.055	.067	2800 Ω

*USED ON INITIAL INSTALLATION

CARD TRANSLATOR CKT.	SD-68342-01,	ISS 6
*DECODER CKT.	SD-68340-01,	ISS. 8
DECODER CONNECTOR CKT.	SD-68339-01,	ISS. 4
TRANSLATOR CONNECTOR CKT.	SD-68341-01,	ISS. 6

NO. 4A TOLL

DECODER
BLANK CODES OR CARD FAILURES
3-DIGIT TRANSLATION
OR
6-DIGIT TRANSLATION WITH NPCR

OS 174-1

ORDER AS BSP ITEM MP-11630

ISSUE	1	2
DATE	7-5-51	8-5-53

MP-11634

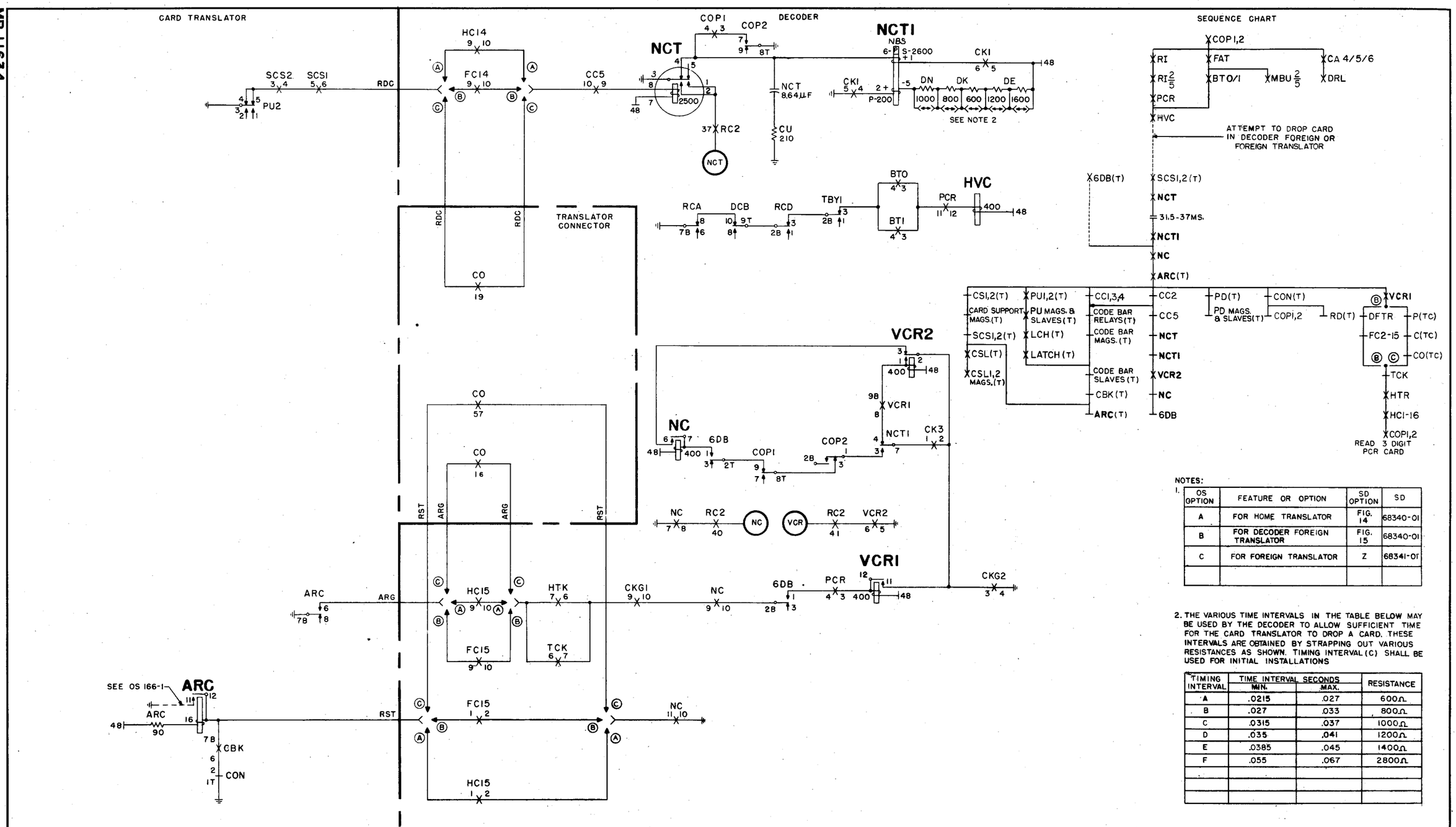

NOTES:

1.

OS OPTION	FEATURE OR OPTION	SD OPTION	SD
A	FOR HOME TRANSLATOR	FIG. 14	68340-01
B	FOR DECODER FOREIGN TRANSLATOR	FIG. 15	68340-01
C	FOR FOREIGN TRANSLATOR	Z	68341-01

2. THE VARIOUS TIME INTERVALS IN THE TABLE BELOW MAY BE USED BY THE DECODER TO ALLOW SUFFICIENT TIME FOR THE CARD TRANSLATOR TO DROP A CARD. THESE INTERVALS ARE OBTAINED BY STRAPPING OUT VARIOUS RESISTANCES AS SHOWN. TIMING INTERVAL (C) SHALL BE USED FOR INITIAL INSTALLATIONS

TIMING INTERVAL	TIME INTERVAL SECONDS MIN.	MAX.	RESISTANCE
A	.0215	.027	600Ω
B	.027	.033	800Ω
C	.0315	.037	1000Ω
D	.035	.041	1200Ω
E	.0385	.045	1400Ω
F	.055	.067	2800Ω

ISSUE	1	2
DATE	6-22-51	9-28-63

CARD TRANSLATOR CKT. SD-68342-01, ISS. 6
*DECODER CKT. SD-68340-01, ISS. 8
TRANSLATOR CONNECTOR CKT. SD-68341-01, ISS. 6

DECODER
PRINCIPAL CITY OR VACANT CODE ROUTING
6 - DIGIT TRANSLATION

NO. 4A OR 4M TOLL

OS 175-1

BELL TELEPHONE LABORATORIES, INC.
PRINTED IN U. S. A.
ORDER AS BSP ITEM MP-11634

NOTE:

1.

OS OPTION	FEATURE OR OPTION		SD OPTION	SD
A	FOR HOME TRANSLATOR		FIG. 14	68340-01
B	FOR DECODER FOREIGN TRANSLATOR		FIG. 15	68340-01
C	FOR FOREIGN TRANSLATOR		Z	68341-01
D	COMBINED TRAIN OFFICES		X	68388-01
	SEPARATE TRAIN OFFICE COMBINED OPERATION			
	SEPARATE TRAIN OFFICE (4A ONLY)	FOR TOLL COMPLETING MARKERS	Y	
E	4A OFFICES ONLY		B	68340-01

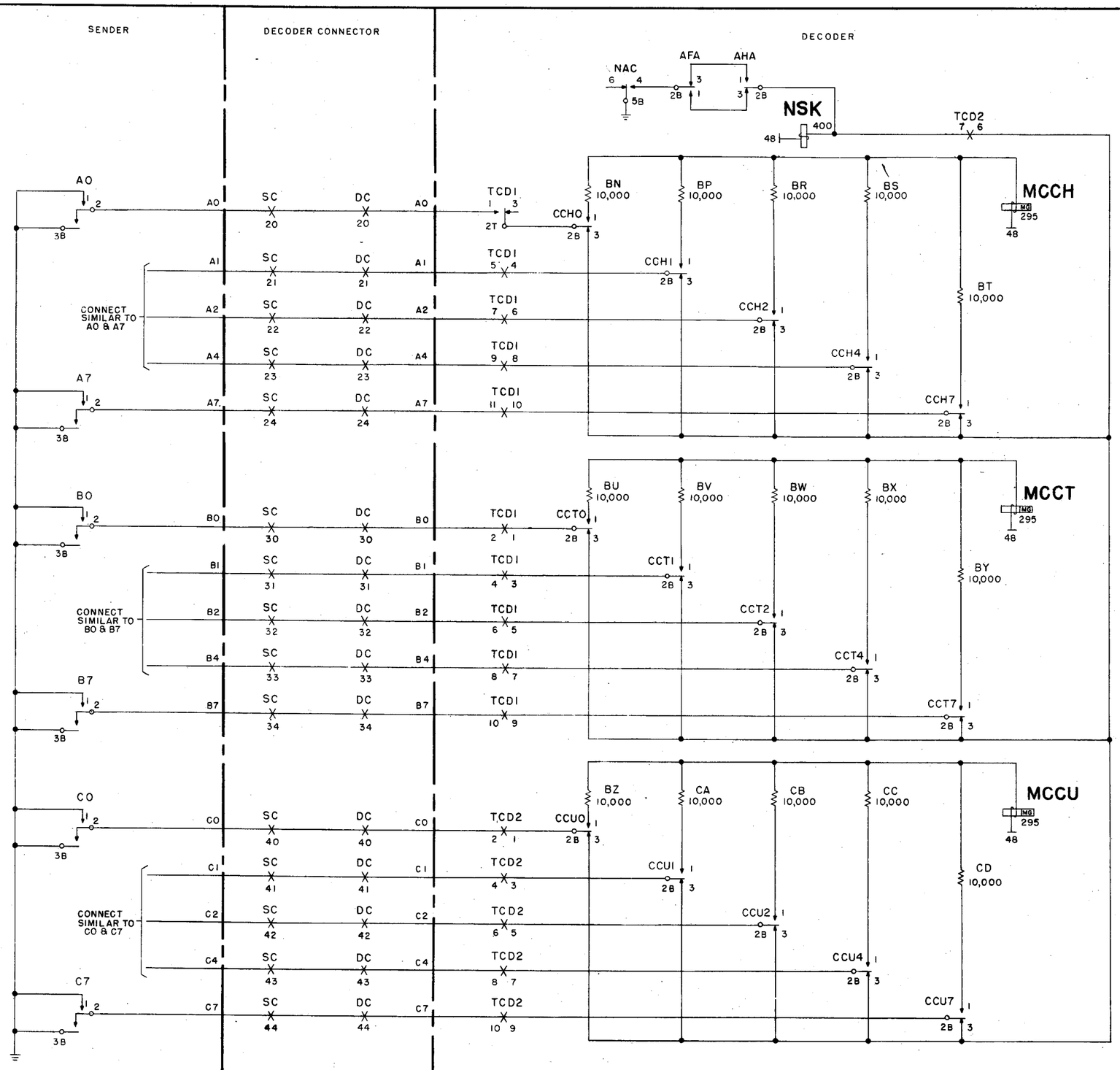

INCOMING SENDER CKT. DP 4A	SD-68221-01, ISS. 14
INCOMING SENDER CKT. MF 4A	SD-68222-01, ISS. 16
DECODER CONNECTOR CKT.	SD-68339-01, ISS. 4
DECODER CKT.	SD-68340-01, ISS. 8
TRANSLATOR CONN. CKT.	SD-68341-01, ISS. 6
TRANSLATOR CKT.	SD-68342-01, ISS. 6
MARKER CKT.	SD-68388-01, ISS. 7
MARKER CONN. CKT.	SD-68395-01, ISS. 5
INCOMING SENDER CKT. DP 4M	SD-68423-01, ISS. 2
INCOMING SENDER CKT. MF 4M	SD-68424-01, ISS. 4

DECODER

CODE DIGIT TRANSFER AND CODE MATCHING CHECK

OS 176-1

2 SHEETS, SHEET 1

NO 4A OR 4M TOLL

ORDER AS BSP ITEM MP-11633

ISSUE	1	A.S.M. R.B.B.	2	M.C.M. R.E.C.		
DATE	6-22-51		8-13-53			

2 SHEETS, SHEET 1

MP-11633

BELL TELEPHONE LABORATORIES, INC.

PRINTED IN U. S. A.

MP-11633

2 SHEETS, SHEET 2

ISSUE	1	2
DATE	6-22-51	8-13-53

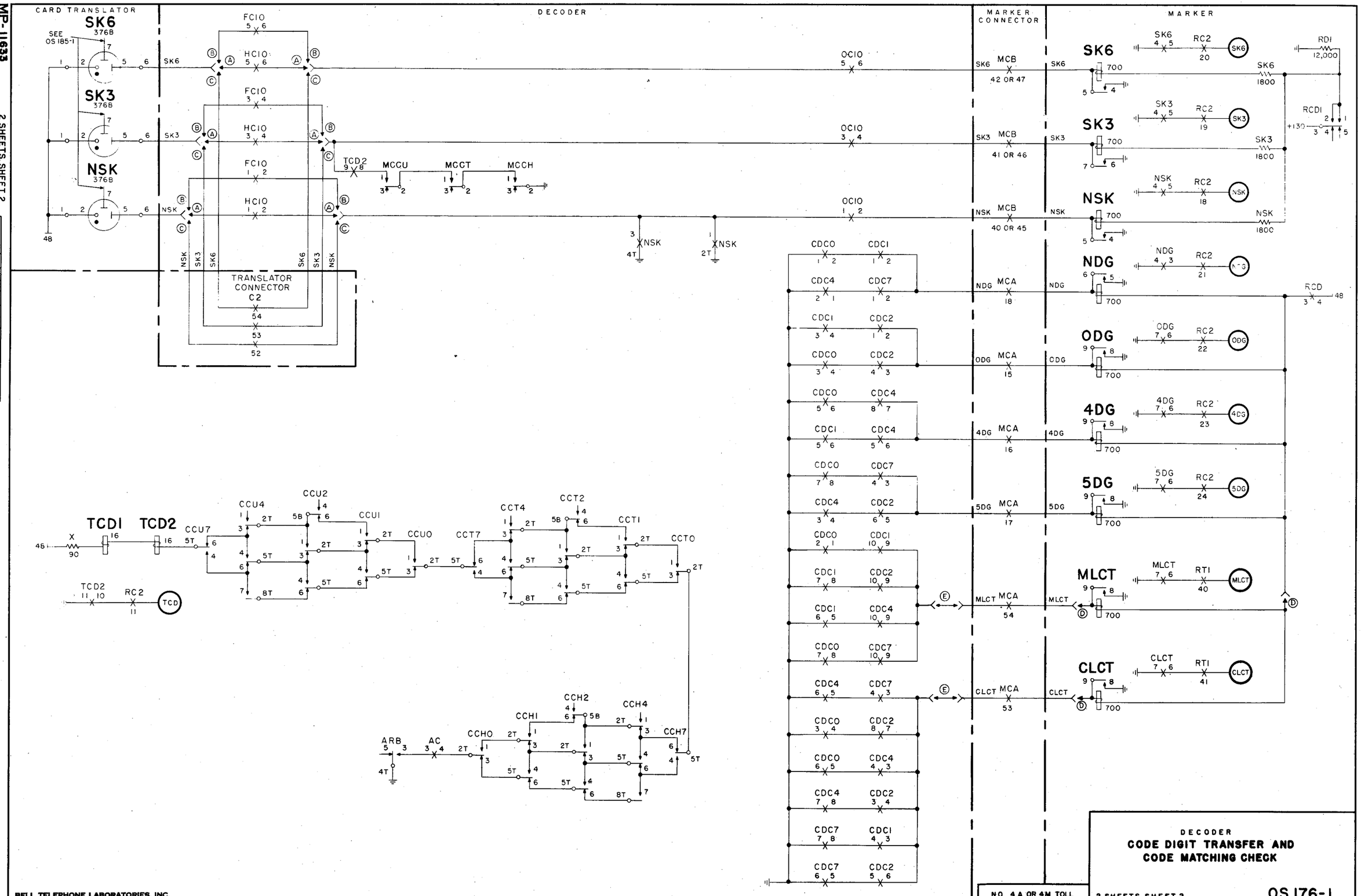

BELL TELEPHONE LABORATORIES, INC.

PRINTED IN U. S. A.

ORDER AS BSP ITEM MP-11633

MP-11629

ISSUE	1	2			
DATE	6-27-51	9-30-53			

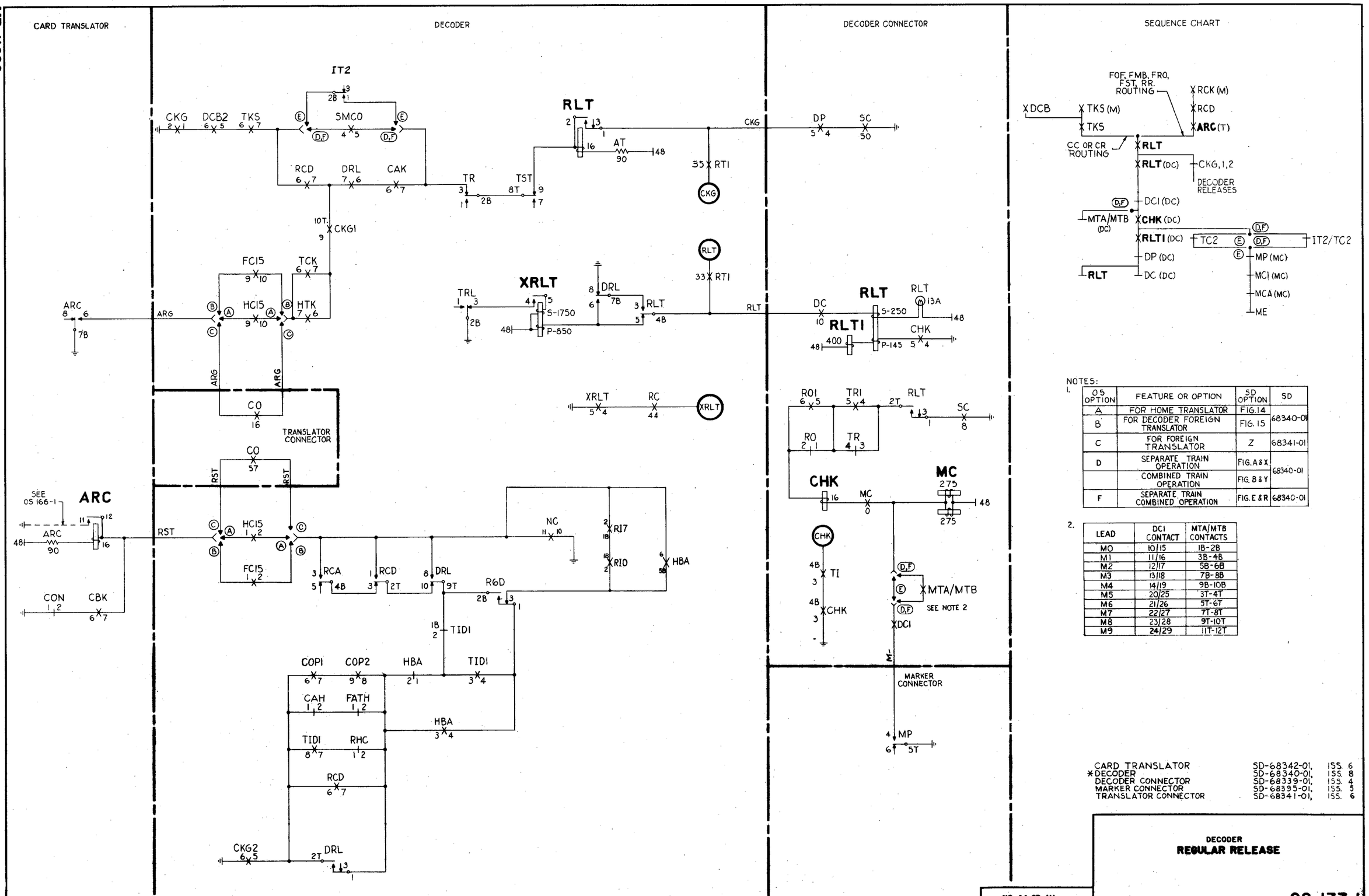

NOTES:

1.

OS OPTION	FEATURE OR OPTION	SD OPTION	SD
A	FOR HOME TRANSLATOR	FIG. 14	68340-01
B	FOR DECODER FOREIGN TRANSLATOR	FIG. 15	
C	FOR FOREIGN TRANSLATOR	Z	68341-01
D	SEPARATE TRAIN OPERATION	FIG. A & X	68340-01
	COMBINED TRAIN OPERATION	FIG. B & Y	
F	SEPARATE TRAIN COMBINED OPERATION	FIG. E & R	68340-01

2.

LEAD	DCI CONTACT	MTA/MTB CONTACTS
M0	10/15	1B-2B
M1	11/16	3B-4B
M2	12/17	5B-6B
M3	13/18	7B-8B
M4	14/19	9B-10B
M5	20/25	3T-4T
M6	21/26	5T-6T
M7	22/27	7T-8T
M8	23/28	9T-10T
M9	24/29	11T-12T

CARD TRANSLATOR	SD-68342-01,	ISS. 6
*DECODER	SD-68340-01,	ISS. 8
DECODER CONNECTOR	SD-68339-01,	ISS. 4
MARKER CONNECTOR	SD-68395-01,	ISS. 3
TRANSLATOR CONNECTOR	SD-68341-01,	ISS. 6

DECODER
REGULAR RELEASE

NO. 4A OR 4M

OS 177-1

BELL TELEPHONE LABORATORIES, INC.
PRINTED IN U. S. A.
ORDER AS BSP ITEM MP-11629

NOTES

OS OPTION	FEATURE OR OPTION			SD OPTION	SD
A	HOME TRANSLATOR			FIG. 14	68340-01
				Y	68342-01
B	DECODER FOREIGN TRANSLATOR			FIG. 15	68340-01
				W	68342-01
C	FOREIGN TRANSLATOR			Z	68341-01
				X	68342-01
D	IF MARKER IS NOT ATTACHED			NONE	68340-01
E	IF MARKER IS ATTACHED			NONE	68340-01
F	EMERGENCY TRANSLATOR			FIG. 3	68341-01
				FIG. 2	68342-01
G	INTER-SENDER LOAD CONTROL TIMING	NOT PROVIDED		FIG. A	68388-01
		PROVIDED	ROUTE TO REGULAR GRP. OF MASTER BUSY TRUNKS		
H			ROUTE TO OVERLOAD ANNOUNCEMENT TRUNKS OR SEPARATE GRP. OF MASTER BUSY TRUNKS OR OTHER TRKS.	FIG. B	
J	4A				68221-01 68222-01
K	TIMING	CONTROL OF STUCK SENDERS BY CTR KEYS AND CHAIN RELAYS. NO RECORDING OF STUCK SENDERS. 4A		FIGS. 4 & J, Z WIRING	68221-01
					68222-01
L		CONTROL OF STUCK SENDERS BY COMMON KEY WITH AUTOMATIC RECORDING OF STUCK SENDERS. 4A		FIGS. 22 & K	68221-01
				FIGS. 20 & K	68222-01
M	4M				68423-01 68424-01

2. IF DECODER FAILS TO IDENTIFY INCOMING TRUNK LOCATION TO ESTABLISH MARKER CONNECTION.
3. ANY TROUBLE, OTHER THAN THE TROUBLE DESCRIBED IN NOTE 2 WHICH CAUSES OPERATION OF TR RELAY.
4. IF TROUBLE RECORDER TIMES OUT.

SEQUENCE CHART

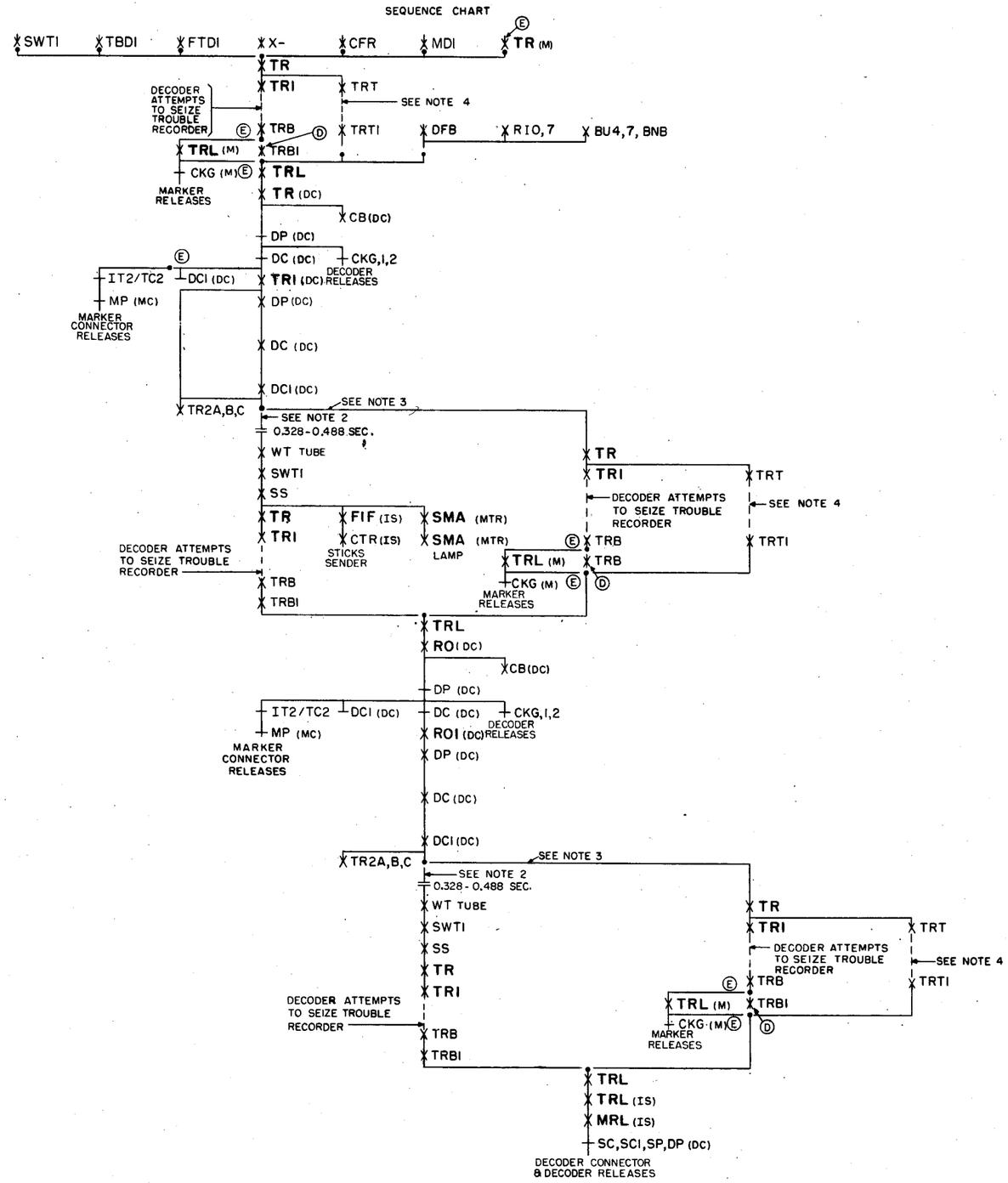

CARD TRANSLATOR CKT.	SD-68342-01, ISS. 6
*DECODER CKT.	SD-68340-01, ISS. 8
DECODER CONNECTOR CKT.	SD-68339-01, ISS. 4
INC. SENDER CKT. - DP-4A	SD-68221-01, ISS. 14
INC. SENDER CKT. - DP-4M	SD-68423-01, ISS. 2
INC. SENDER CKT. - MF-4A	SD-68222-01, ISS. 16
INC. SENDER CKT. - MF-4M	SD-68424-01, ISS. 4
MARKER CKT.	SD-68388-01, ISS. 7
MARKER CONNECTOR CKT.	SD-68395-01, ISS. 5
MISC. CKT. FOR TROUBLE RECORDER FRAME	SD-68392-01, ISS. 5
TRANSLATOR CONNECTOR CKT.	SD-68341-01, ISS. 6

DECODER.

TROUBLE RELEASE CONDITIONS

OS 178-1

2 SHEETS, SHEET 1

NO. 4A OR 4M TOLL

ORDER AS BSP ITEM MP-11765

ISSUE	1	A.E.M. E.B.B.	2	M.J.H. A.E.C.
DATE	1-18-52		9-30-53	

2 SHEETS, SHEET 1

MP-11765

BELL TELEPHONE LABORATORIES, INC.

PRINTED IN U. S. A.

MP-11765 2 SHEETS, SHEET 2

ISSUE			
DATE			
1-18-52	1	A.E.M. R.B.B.	
9-30-53	2	W.C.H. R.B.C.	

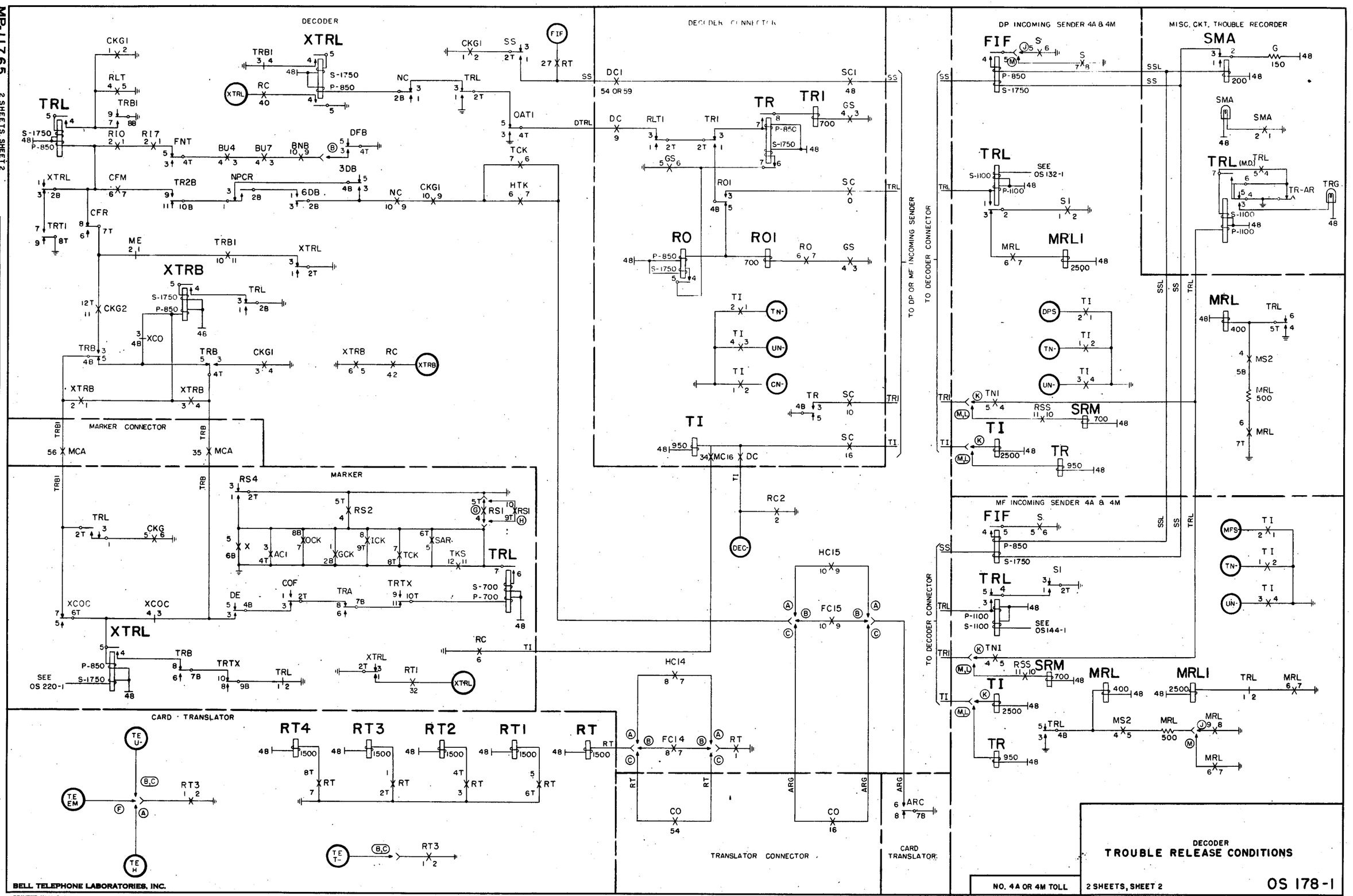

BELL TELEPHONE LABORATORIES, INC.

PRINTED IN U. S. A.

ORDER AS BSP ITEM MP-11765

DECODER

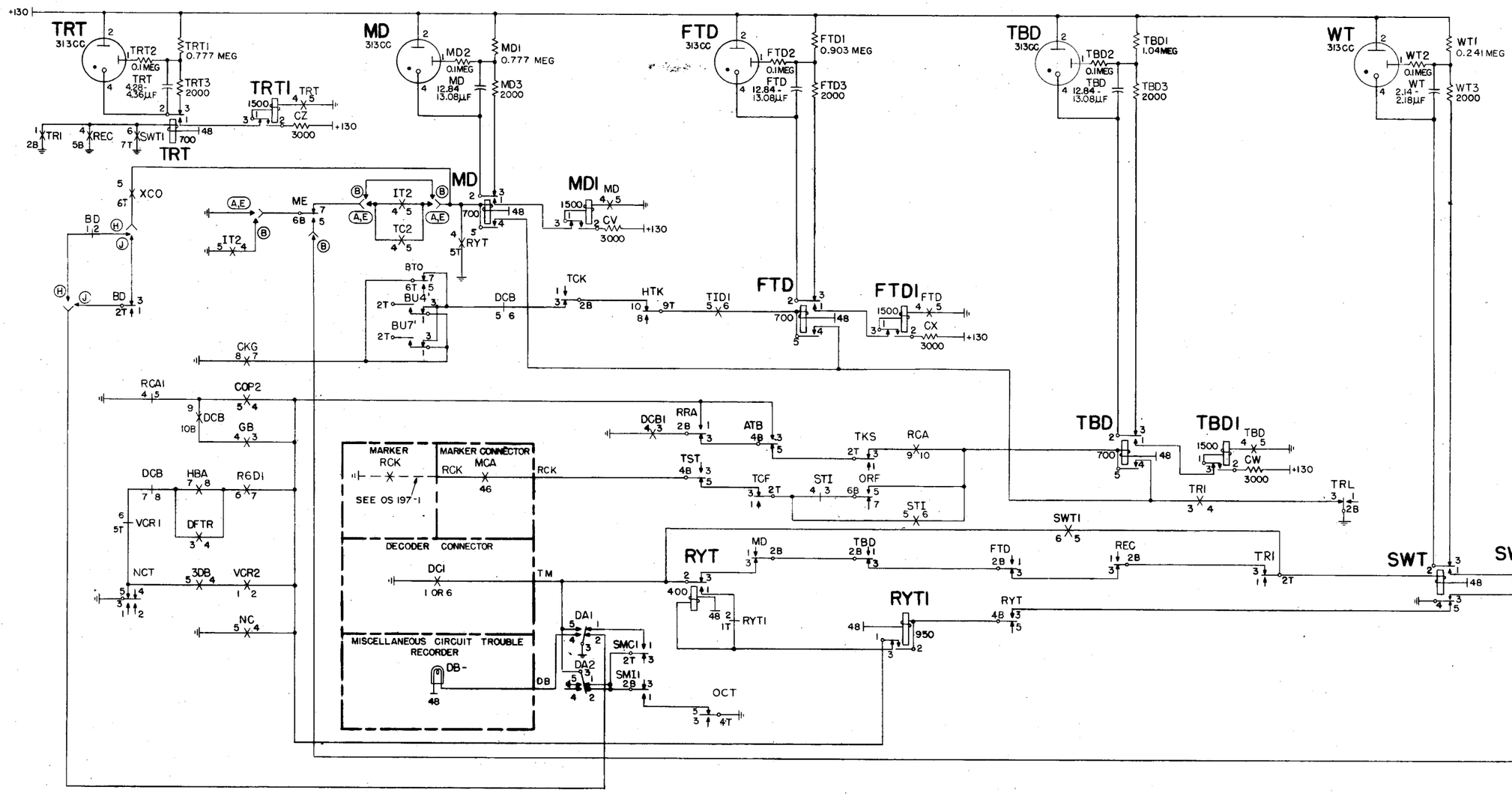

ISSUE	1	2
DATE	6-28-57	10-1-53

3 SHEETS, SHEET 1

MP-11636

DECODER

TIMING, TROUBLE CROSSES AND REQUEST FOR TROUBLE RECORDER

OS 179-1

3 SHEETS, SHEET 1

NO. 4A OR 4M TOLL

ORDER AS BSP ITEM MP- 11636

BELL TELEPHONE LABORATORIES, INC.

PRINTED IN U. S. A.

MP-11636

3 SHEETS, SHEET 2

ISSUE	DATE	
1	6-28-51	H.S.W. R.B.B.
2	10-1-53	H.J.K. B.E.C.

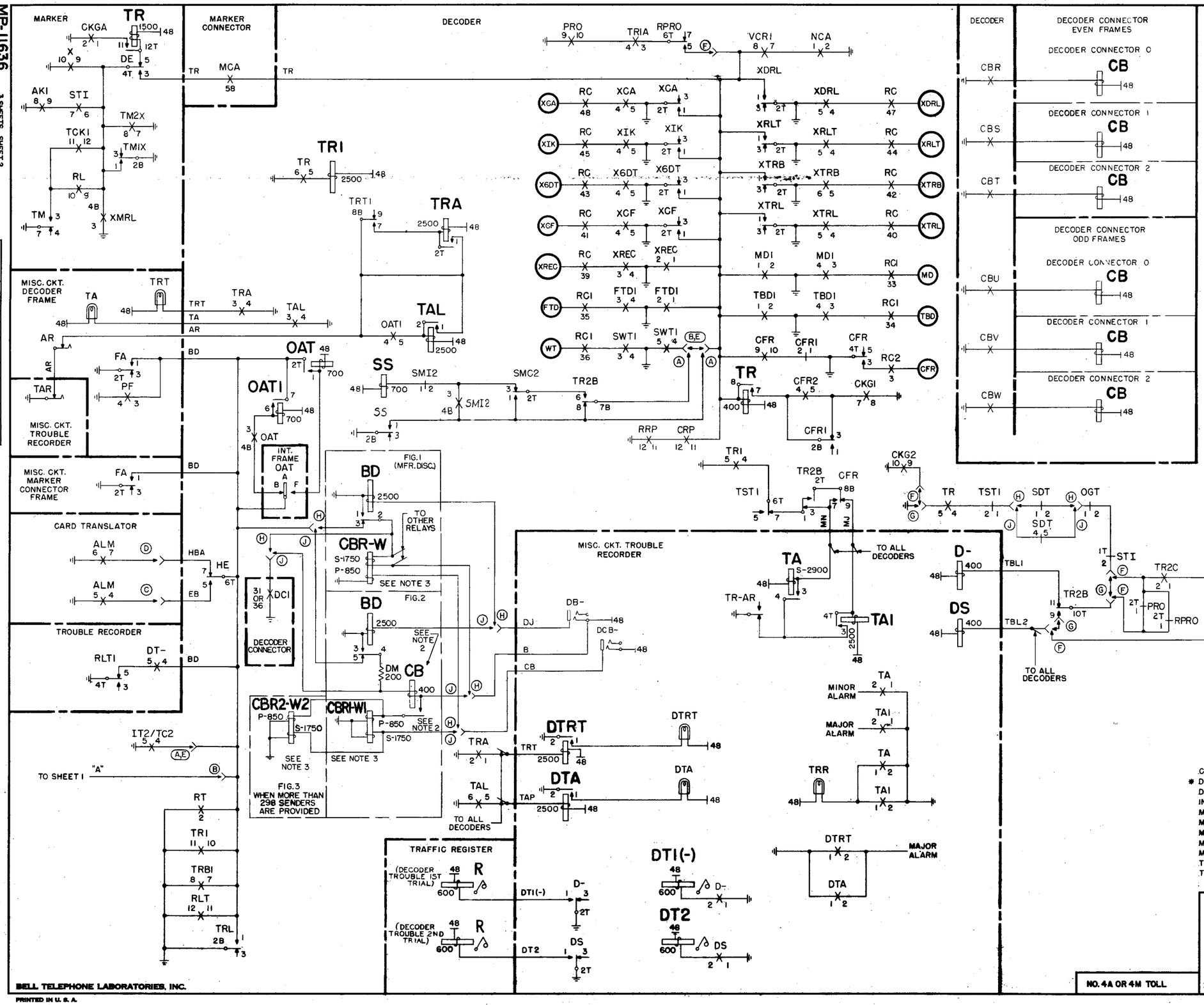

DECODER

DECODER CONNECTOR EVEN FRAMES

DECODER CONNECTOR 0 — CB

DECODER CONNECTOR 1 — CB

DECODER CONNECTOR 2 — CB

DECODER CONNECTOR ODD FRAMES

DECODER CONNECTOR 0 — CB

DECODER CONNECTOR 1 — CB

DECODER CONNECTOR 2 — CB

NOTES:

1.

OS OPTION	FEATURE OR OPTION			SD OPTION	SD
A	FOR SEPARATE TRAIN OPERATION			FIGS. A & X WIRING	68340-01
B	FOR COMBINED TRAIN OPERATION			FIGS. B & Y WIRING	
C	FOR EMERGENCY TRANS.			Z	68342-01
D	FOR HOME TRANSLATOR			Y	
E	SEPARATE TRAIN COMBINED OPERATION			FIGS. E & R WIRING	
F	INTER-SENDER LOAD CONTROL TIMING	PROVIDED	ROUTE TO OVERLOAD ANNOUNCEMENT TRKS. OR TO SEPARATE GRP. OF MASTER BUSY TRKS. OR OTHER TRKS.	FIGS. F, H & M. WIRING	68340-01
			ROUTE TO REGULAR GRP. OF MASTER BUSY TRKS.	FIGS. F, H & K WIRING	
G		NOT PROVIDED		FIG. G & J WIRING	
H	M. D.			FIGS. H, K & 19	
J	STD.			FIGS. J, L, 25, 26 & 27	

2.

(CB) RELAY CONTACTS	RELAY COILS
1T-2T	CBS 1,2
3T-4T	CBR 1,2
1B-2B	CBT 1,2
3B-4B	CBU 1,2
5B-6B	CBV 1,2
7P-8B	CBW 1,2

3.

RELAY		CONN. FR. NO. EVEN	CONN. FR. NO. ODD	CR-CONTACT NOS.
FOR DECODER	CONNECTOR FRS. 0-19			
CBR OR CBR1	CONN. NO. 0 EVEN FRS.	0	1	1OB-1B
CBS OR CBS1	CONN. NO. 1 EVEN FRS.	2	3	6B-3B
CBT OR CBT1	CONN. NO. 2 EVEN FRS.	4	5	1 6B-7B
CBU OR CBU1	CONN. NO. 0 ODD FRS.	6	7	4B-5B
CBV OR CBV1	CONN. NO. 1 ODD FRS.	8	9	2T-1T
CBW OR CBW1	CONN. NO. 2 ODD FRS.	10	11	4T-3T
		12	13	6T-5T
FOR DECODER	CONNECTOR FRS. 20-25	14	15	8T-7T
CBR2	CONN. NO. 0 EVEN FRS.	16	17	10T-9T
CBS2	CONN. NO. 1 EVEN FRS.	18	19	12T-11T
CBT2	CONN. NO. 2 EVEN FRS.	20	21	5B-6B
CBU2	CONN. NO. 0 ODD FRS.	22	23	3B-4B
CBV2	CONN. NO. 1 ODD FRS.	24	25	1B-2B
CBW2	CONN. NO. 2 ODD FRS.			

CARD TRANSLATOR CKT.	SD-68342-01,	ISS. 6
* DECODER CKT.	SD-68340-01,	ISS. 8
DECODER CONNECTOR	SD-68339-01,	ISS. 4
INTERRUPTER FRAME CKT.	SD-68058-01,	ISS. 15
MARKER CKT.	SD-68388-01,	ISS. 7
MARKER CONNECTOR CKT.	SD-68395-01,	ISS. 5
MISC. CKT. DECODER FRAME	SD-68411-01,	ISS. 1
MISC. CKT. MARKER CONNECTOR FRAME	SD-68419-01,	ISS. 2
MISC. CKT TROUBLE RECORDER FRAME	SD-68392-01,	ISS. 5
TRAFFIC REGISTER CKT.	SD-68412-01,	ISS. 7
TROUBLE RECORDER CKT.	SD-68389-01,	ISS. 5

DECODER

TIMING, TROUBLE CROSSES AND REQUEST FOR TROUBLE RECORDER

NO. 4A OR 4M TOLL

3 SHEETS, SHEET 2

OS 179-1

BELL TELEPHONE LABORATORIES, INC.

PRINTED IN U. S. A.

ORDER AS BSP ITEM MP-11636

MP-11636 3 SHEETS, SHEET 3

ISSUE	1	2			
DATE	6-28-57	10-1-63			

DECODER

SEQUENCE CHARTS

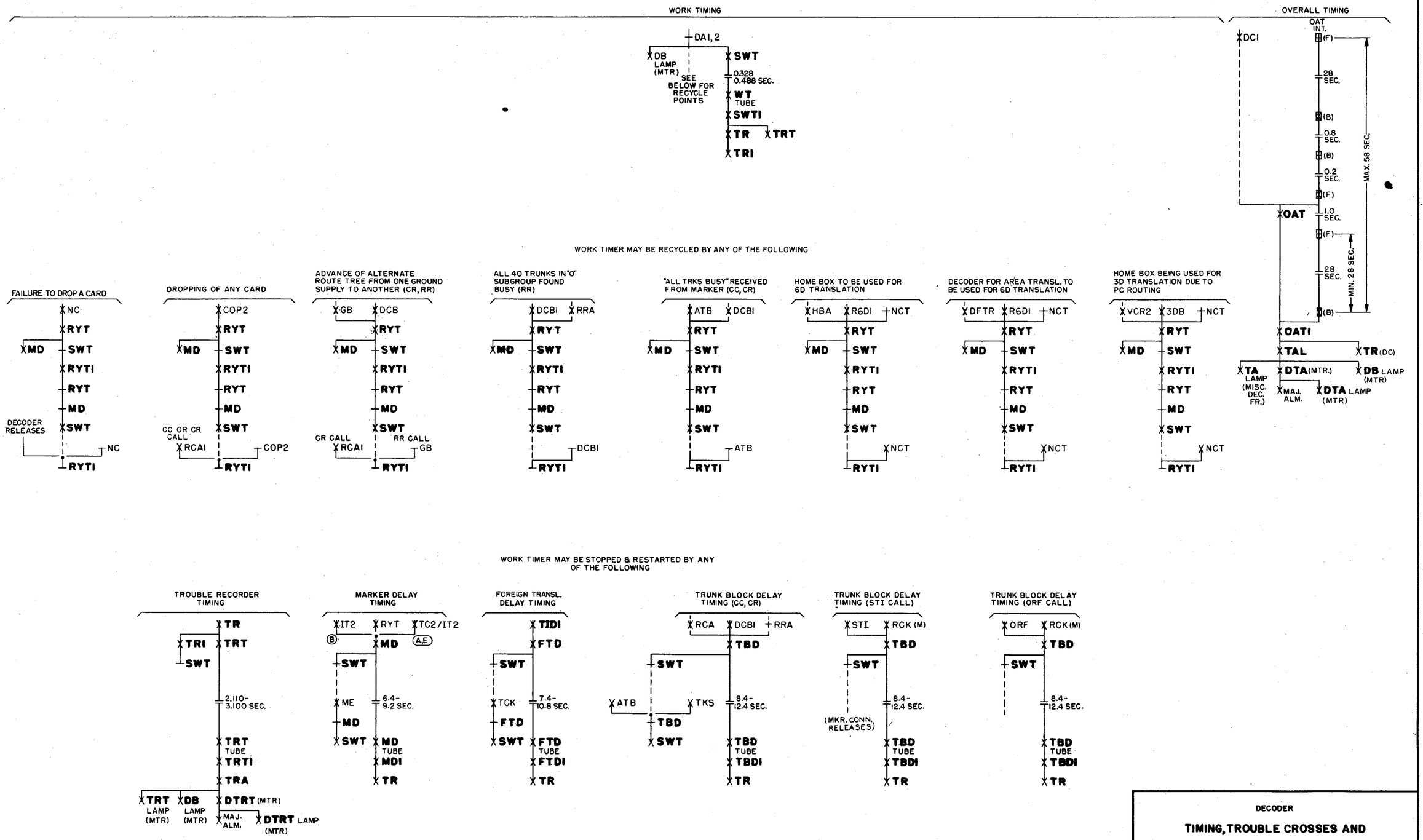

DECODER

TIMING, TROUBLE CROSSES AND REQUEST FOR TROUBLE RECORDER

3 SHEETS, SHEET 3

OS 179-1

NO. 4A OR 4M TOLL

BELL TELEPHONE LABORATORIES, INC.

PRINTED IN U. S. A.

ORDER AS BSP ITEM MP-11636

MP-11637

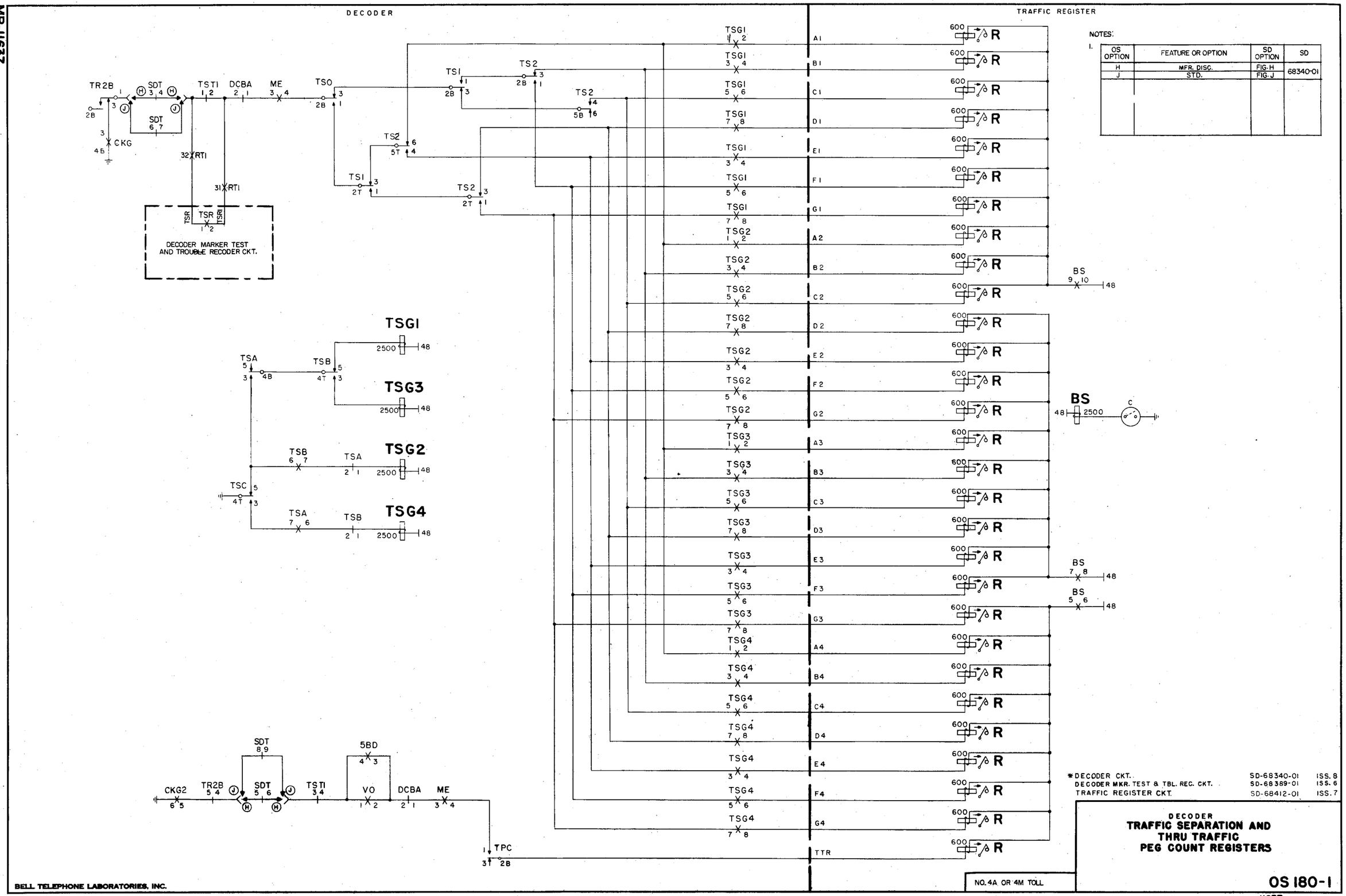

NOTES:

1.

OS OPTION	FEATURE OR OPTION	SD OPTION	SD
H	MFR. DISC.	FIG. H	68340-01
J	STD.	FIG. J	

ISSUE	DATE
1 A.S.T.M.	5-28-51
2 M.W.K.	10-29-53

*DECODER CKT. SD-68340-01 ISS. 8
DECODER MKR. TEST & TBL. REC. CKT. SD-68389-01 ISS. 6
TRAFFIC REGISTER CKT. SD-68412-01 ISS. 7

NO. 4A OR 4M TOLL

DECODER
TRAFFIC SEPARATION AND THRU TRAFFIC PEG COUNT REGISTERS

OS 180-1

BELL TELEPHONE LABORATORIES, INC.
PRINTED IN U. S. A.
ORDER AS BSP ITEM MP-11637

MP-10850

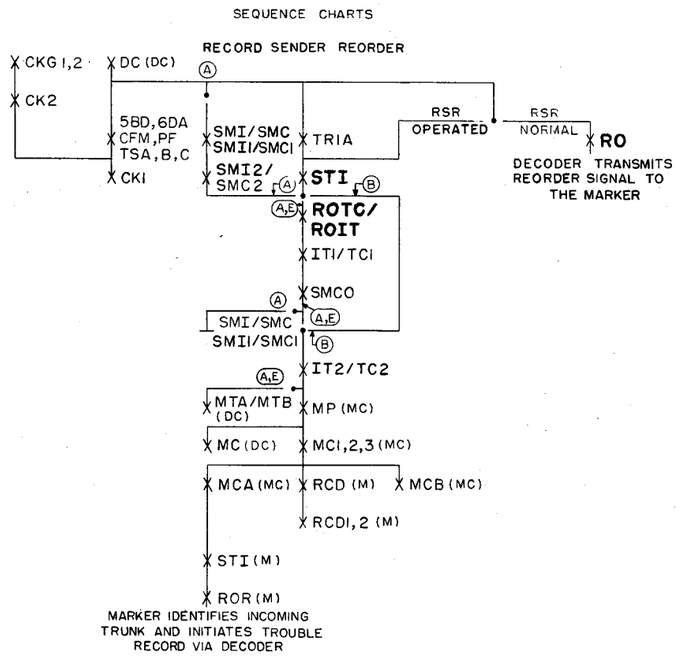

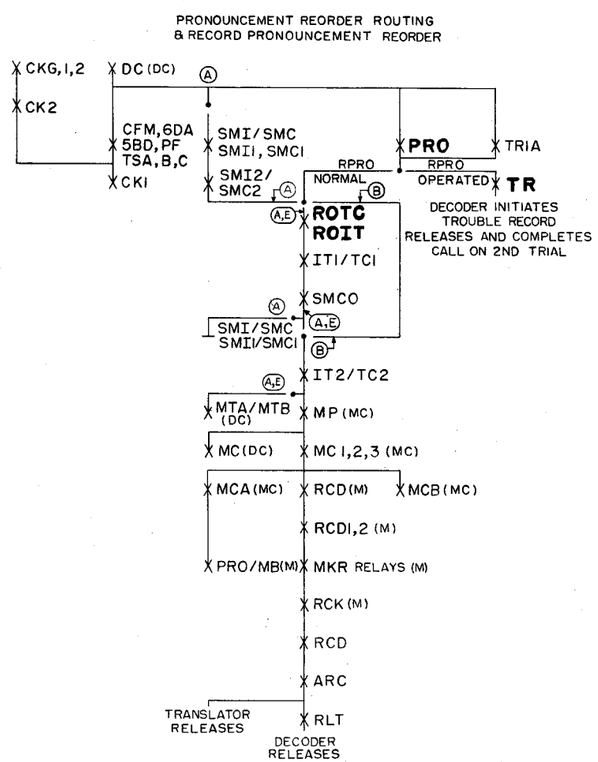

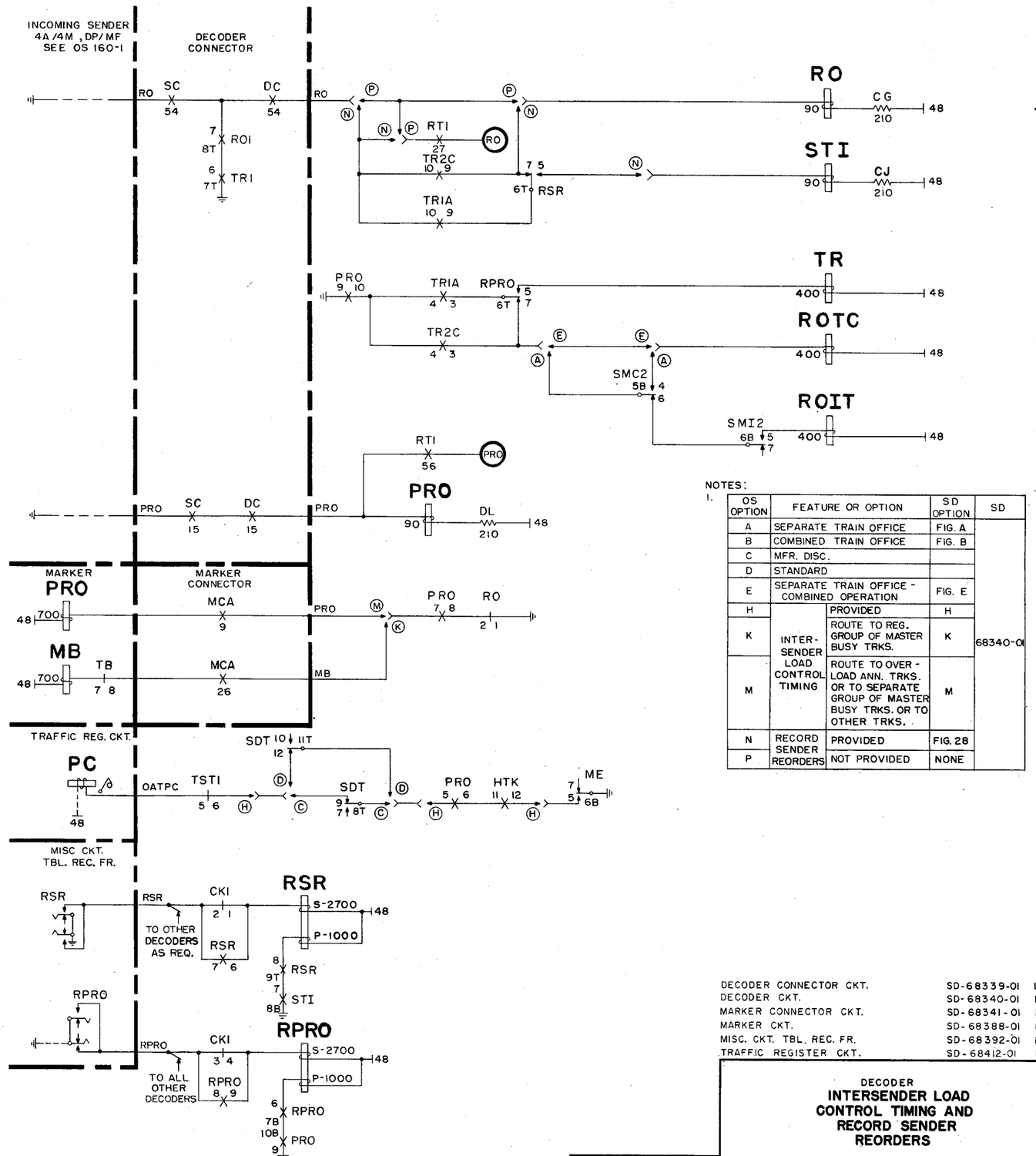

NOTES:
1.

OS OPTION	FEATURE OR OPTION		SD OPTION	SD
A	SEPARATE TRAIN OFFICE		FIG. A	68340-01
B	COMBINED TRAIN OFFICE		FIG. B	
C	MFR. DISC.			
D	STANDARD			
E	SEPARATE TRAIN OFFICE - COMBINED OPERATION		FIG. E	
H	INTER-SENDER LOAD CONTROL TIMING	PROVIDED	H	
K		ROUTE TO REG. GROUP OF MASTER BUSY TRKS.	K	
M		ROUTE TO OVER-LOAD ANN. TRKS. OR TO SEPARATE GROUP OF MASTER BUSY TRKS. OR TO OTHER TRKS.	M	
N	RECORD SENDER REORDERS	PROVIDED	FIG. 28	
P		NOT PROVIDED	NONE	

DECODER CONNECTOR CKT.	SD-68339-01	ISS. 4
DECODER CKT.	SD-68340-01	ISS. 8
MARKER CONNECTOR CKT.	SD-68341-01	ISS. 5
MARKER CKT.	SD-68388-01	ISS. 8
MISC. CKT. TBL. REC. FR.	SD-68392-01	ISS. 7
TRAFFIC REGISTER CKT.	SD-68412-01	ISS. 5

ISSUE	1	2
DATE	12-8-65	

NO 4A OR 4M TOLL

DECODER
INTERSENDER LOAD CONTROL TIMING AND RECORD SENDER REORDERS

OS 181-1

BELL TELEPHONE LABORATORIES, INC.
PRINTED IN U. S. A.
ORDER AS BSP ITEM MP-10850

MP-11638

ISSUE	DATE
1	12-6-67
2	5-29-67
10-5-53	

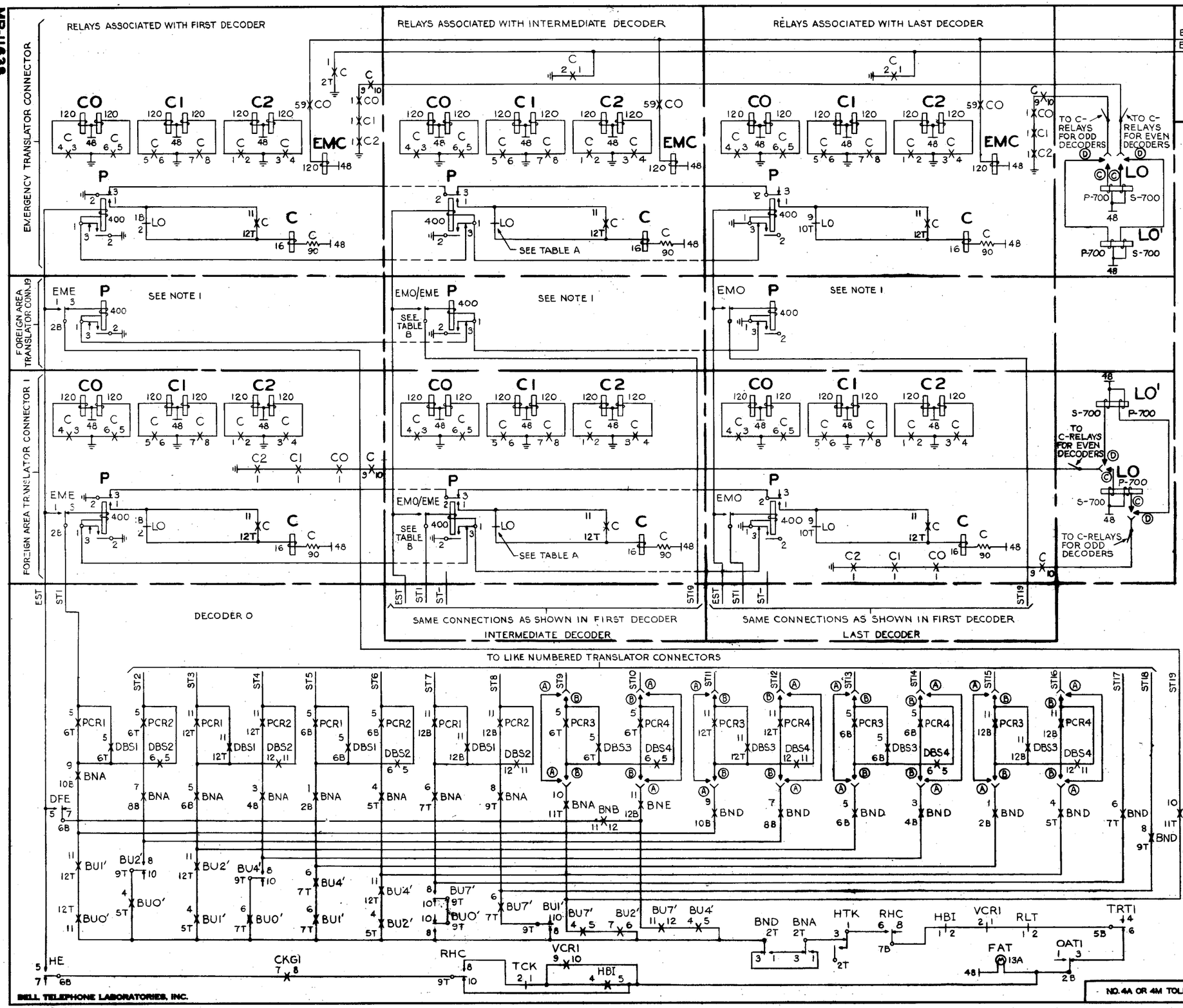

TABLE A

LO & LO' RELAY ASSIGNMENTS

DECODER NUMBER	0	1	2	3	4	5	6	7	8	9
LO RELAY CONTACTS	1B & 2B	3B & 4B	5B & 6B	7B & 8B	9B & 10B	1T & 2T	3T & 4T	5T & 6T	7T & 8T	9T & 10T
DECODER NUMBER	10	11	12	13	14	15	16	17		
LO' RELAY CONTACTS	1B & 2B	3B & 4B	5B & 6B	7B & 8B	9B & 10B	1T & 2T	3T & 4T	5T & 6T		

TABLE B

EME/EMO & EME'/EMO' RELAY ASSIGNMENTS

DECODER NUMBER	0	1	2	3	4	5	6	7	8	9
EME RELAY CONTACTS	1B 2B 3B		4B 5B 6B		1T 2T 3T		4T 5T 6T		7T 8T 9T	
EMO RELAY CONTACTS		1B 2B 3B		4B 5B 6B		1T 2T 3T		4T 5T 6T		7T 8T 9T
DECODER NUMBER	10	11	12	13	14	15	16	17		
EME' RELAY CONTACTS	1B 2B 3B		4B 5B 6B		1T 2T 3T		4T 5T 6T			
EMO' RELAY CONTACTS		1B 2B 3B		4B 5B 6B		1T 2T 3T		4T 5T 6T		

NOTES:

1. ARRANGEMENT SAME AS CONNECTOR 1 SHOWN
2.

OS OPTION	FEATURE OR OPTION	SD OPTION	SD
A	PAIRED BOXES 1-8	FIG. 9 & C	68340-01
B	PAIRED BOXES 16	FIG. 9 & D	68340-01
C	FOR DECODERS 0-9	FIG. 2	68341-01
D	FOR DECODERS 10-17	FIG. 6	

CARD TRANSLATOR CKT. SD-68342-01, ISS. 7
DECODER CKT. SD-68340-01, ISS. 8
* TRANSLATOR CONNECTOR CKT. SD-68341-01, ISS. 6

TRANSLATOR CONNECTOR
SEIZURE AND DECODER PREFERENCE

NO. 4A OR 4M TOLL

OS 183-1

BELL TELEPHONE LABORATORIES, INC.
PRINTED IN U.S.A.
ORDER AS BSP ITEM MP-11638

MP-11639

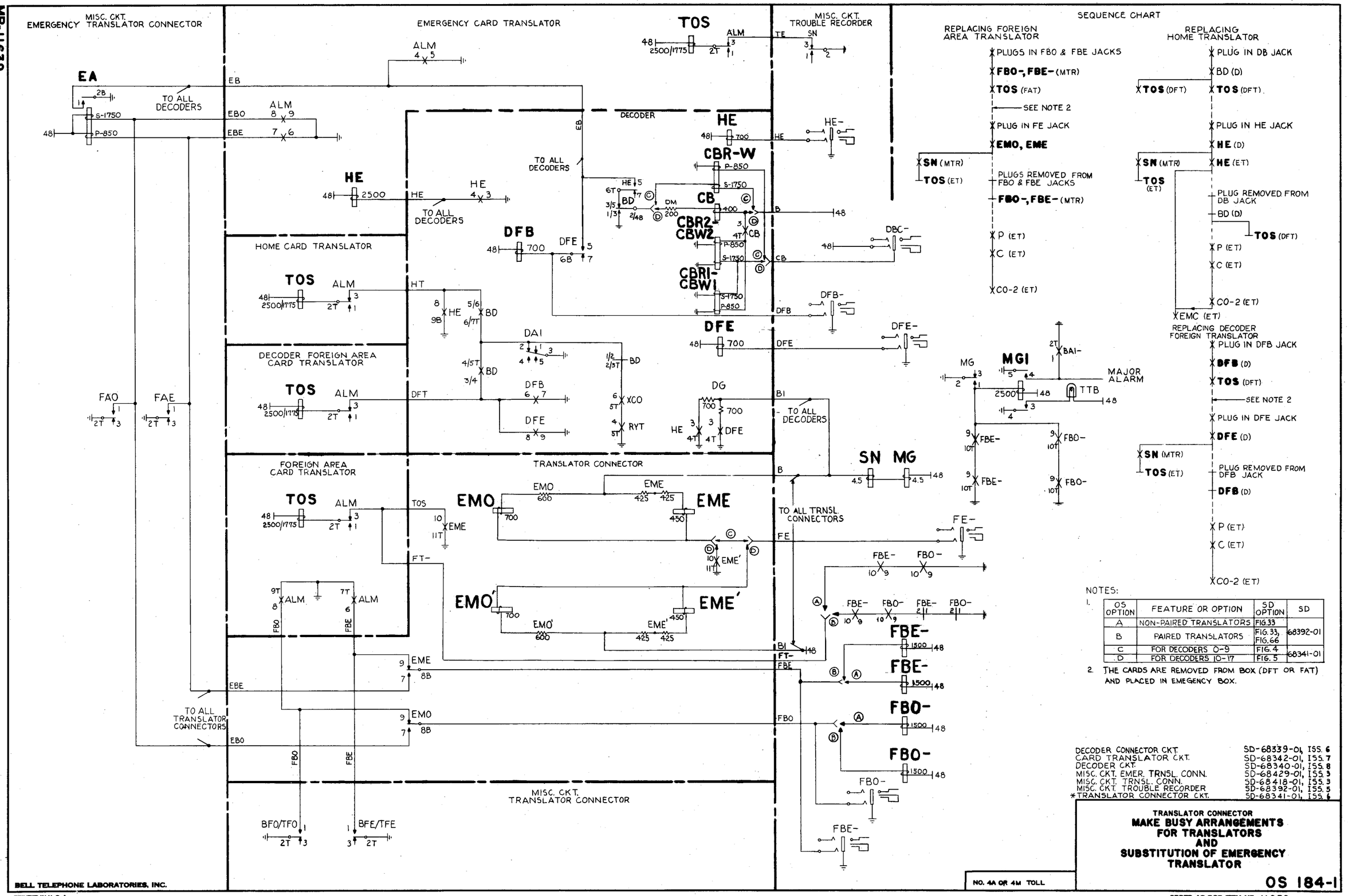

NOTES:

1.

OS OPTION	FEATURE OR OPTION	SD OPTION	SD
A	NON-PAIRED TRANSLATORS	FIG. 33	
B	PAIRED TRANSLATORS	FIG. 33, FIG. 66	68392-01
C	FOR DECODERS 0-9	FIG. 4	
D	FOR DECODERS 10-17	FIG. 5	68341-01

2. THE CARDS ARE REMOVED FROM BOX (DFT OR FAT) AND PLACED IN EMEGENCY BOX.

DECODER CONNECTOR CKT.	SD-68339-01, ISS. 6
CARD TRANSLATOR CKT.	SD-68342-01, ISS. 7
DECODER CKT.	SD-68340-01, ISS. 8
MISC. CKT. EMER. TRNSL. CONN.	SD-68429-01, ISS. 3
MISC. CKT. TRNSL. CONN.	SD-68418-01, ISS. 3
MISC. CKT. TROUBLE RECORDER	SD-68392-01, ISS. 5
*TRANSLATOR CONNECTOR CKT.	SD-68341-01, ISS. 6

ISSUE	DATE
1	6-25-51
2	10-7-55

TRANSLATOR CONNECTOR

MAKE BUSY ARRANGEMENTS FOR TRANSLATORS AND SUBSTITUTION OF EMERGENCY TRANSLATOR

OS 184-1

NO. 4A OR 4M TOLL

BELL TELEPHONE LABORATORIES, INC.
PRINTED IN U. S. A.
ORDER AS BSP ITEM MP-11639

MP-11667

ISSUE	DATE
1	4-5-56
2	8-7-57

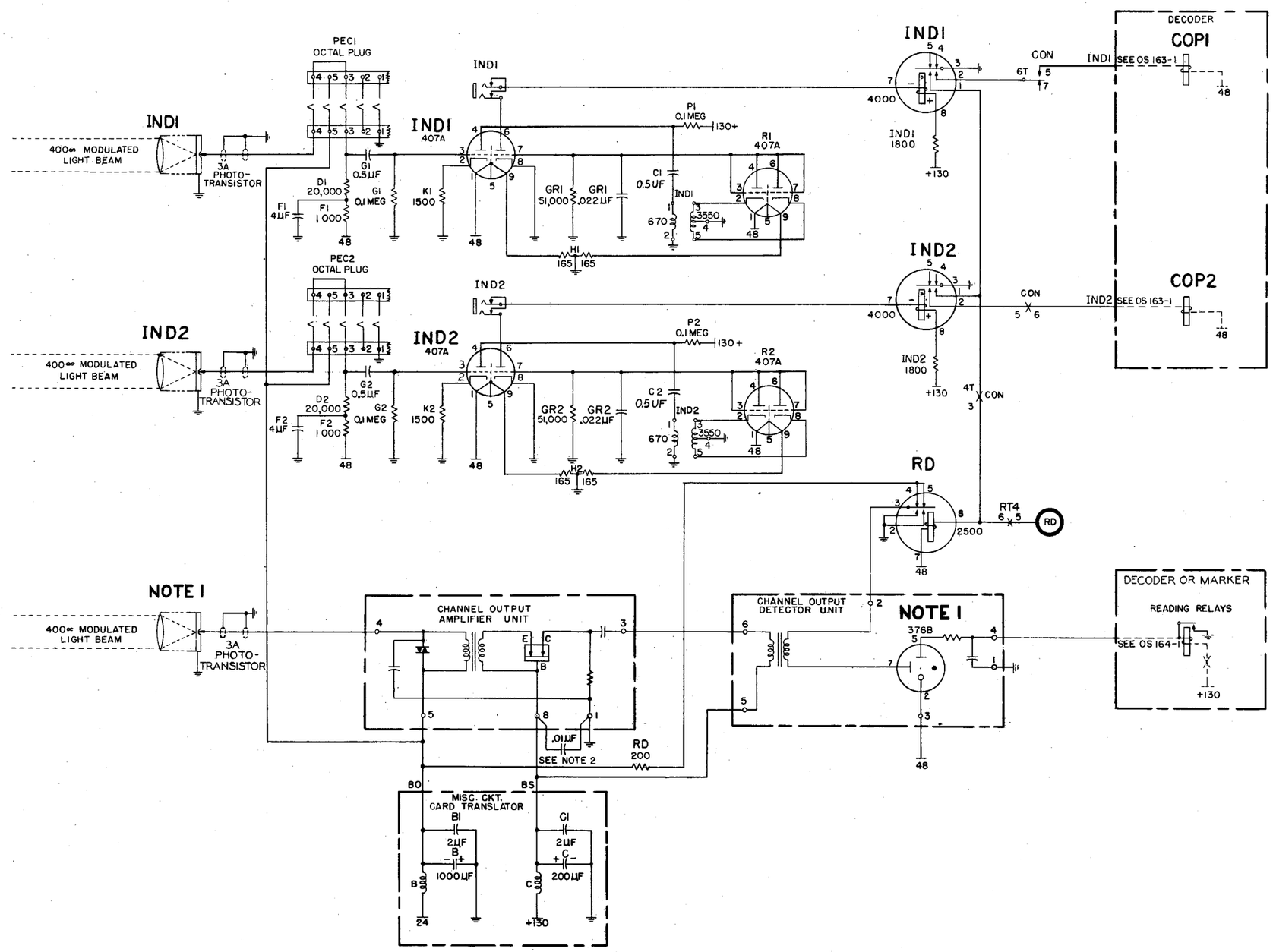

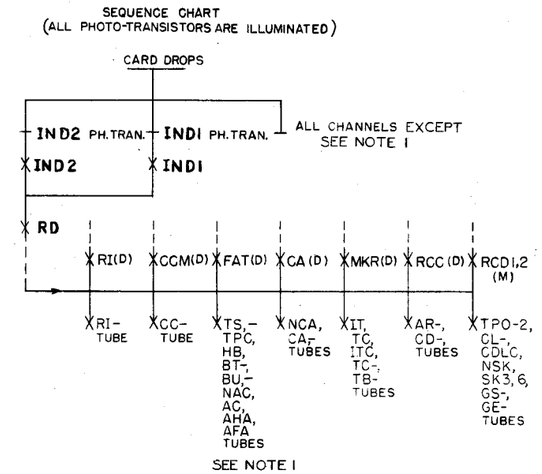

NOTES:

1. CHANNELS ASSOCIATED WITH ENLARGED HOLES IN THE DROPPED CARD.
2. THIS CONDENSER IS PROVIDED FOR THE FOLLOWING CHANNELS ONLY: TSO, CLTO, ART4, CDC2, CCH7, TCT2, AND GSU7.

* CARD TRANSLATOR	SD-68342-01, ISS. 7
DECODER	SD-68340-01, ISS. 5
MISC. CKT. CARD TRANSLATOR	SD-68407-01, ISS. 5

CARD TRANSLATOR INDEX AND CHANNEL DETECTION CIRCUITS

NO 4A OR 4M TOLL

OS 185-1

BELL TELEPHONE LABORATORIES, INC.
PRINTED IN U. S. A.
ORDER AS BSP ITEM MP-11667

MP-11670

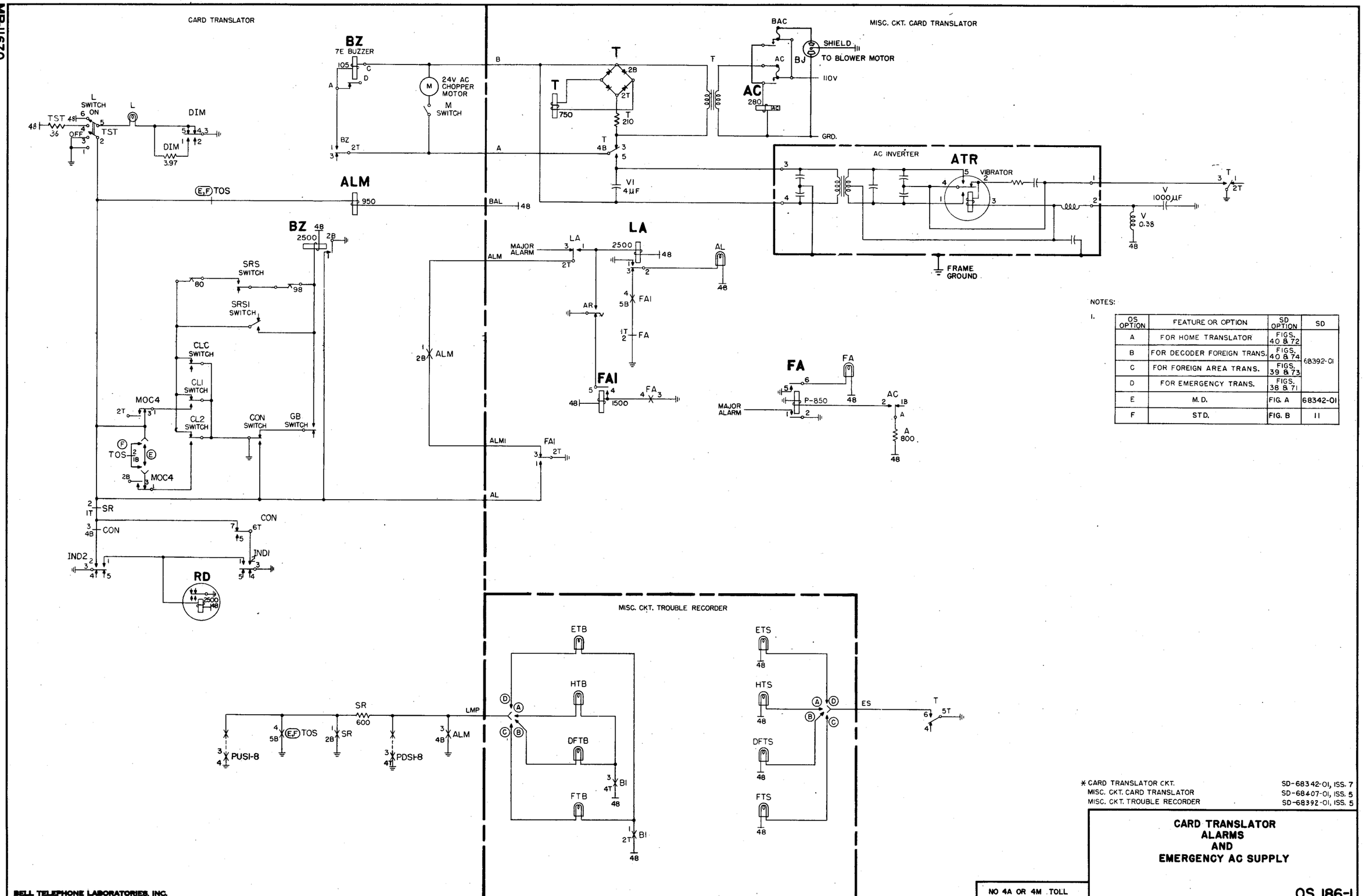

NOTES:

1.

OS OPTION	FEATURE OR OPTION	SD OPTION	SD
A	FOR HOME TRANSLATOR	FIGS. 40 & 72	68392-01
B	FOR DECODER FOREIGN TRANS.	FIGS. 40 & 74	
C	FOR FOREIGN AREA TRANS.	FIGS. 39 & 73	
D	FOR EMERGENCY TRANS.	FIGS. 38 & 71	
E	M. D.	FIG. A	68342-01
F	STD.	FIG. B	11

ISSUE	1	2			
DATE	8-7-61	10-8-63			

* CARD TRANSLATOR CKT. SD-68342-01, ISS. 7
MISC. CKT. CARD TRANSLATOR SD-68407-01, ISS. 5
MISC. CKT. TROUBLE RECORDER SD-68392-01, ISS. 5

CARD TRANSLATOR ALARMS AND EMERGENCY AC SUPPLY

NO 4A OR 4M TOLL

OS 186-1

BELL TELEPHONE LABORATORIES, INC.
PRINTED IN U. S. A.
ORDER AS BSP ITEM MP-11670

NOTES:

1.

OS OPTION	FEATURE OPTION	SD OPTION	SD
Z	FOR OFFICES HAVING SIX OR LESS TRUNK BLOCK CONNECTORS.	Z	68395-01
Y	FOR OFFICES HAVING SEVEN TO EIGHTEEN TRUNK BLOCK CONNECTORS.	Y, Z	68395-01
X	FOR OFFICES HAVING NINETEEN TO THIRTY TRUNK BLOCK CONNECTORS.	V,X,Y	68395-01

2. CONTACT ASSIGNMENTS OF M-LEADS ON DCI, MTA AND MTB RELAYS.

LEAD MARKER NO.	CONTACT NUMBER			
	DCI RELAYS		MTA RELAYS	MTB RELAYS
	EVEN	ODD		
M0	10	15	1-2B	1-2B
M1	11	16	3-4B	3-4B
M2	12	17	5-6B	5-6B
M3	13	18	7-8B	7-8B
M4	14	19	9-10B	9-10B
M5	20	25	3-4T	3-4T
M6	21	26	5-6T	5-6T
M7	22	27	7-8T	7-8T
M8	23	28	9-10T	9-10T
M9	24	29	11-12T	11-12T

SEQUENCE CHART

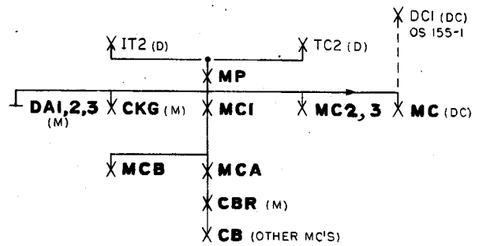

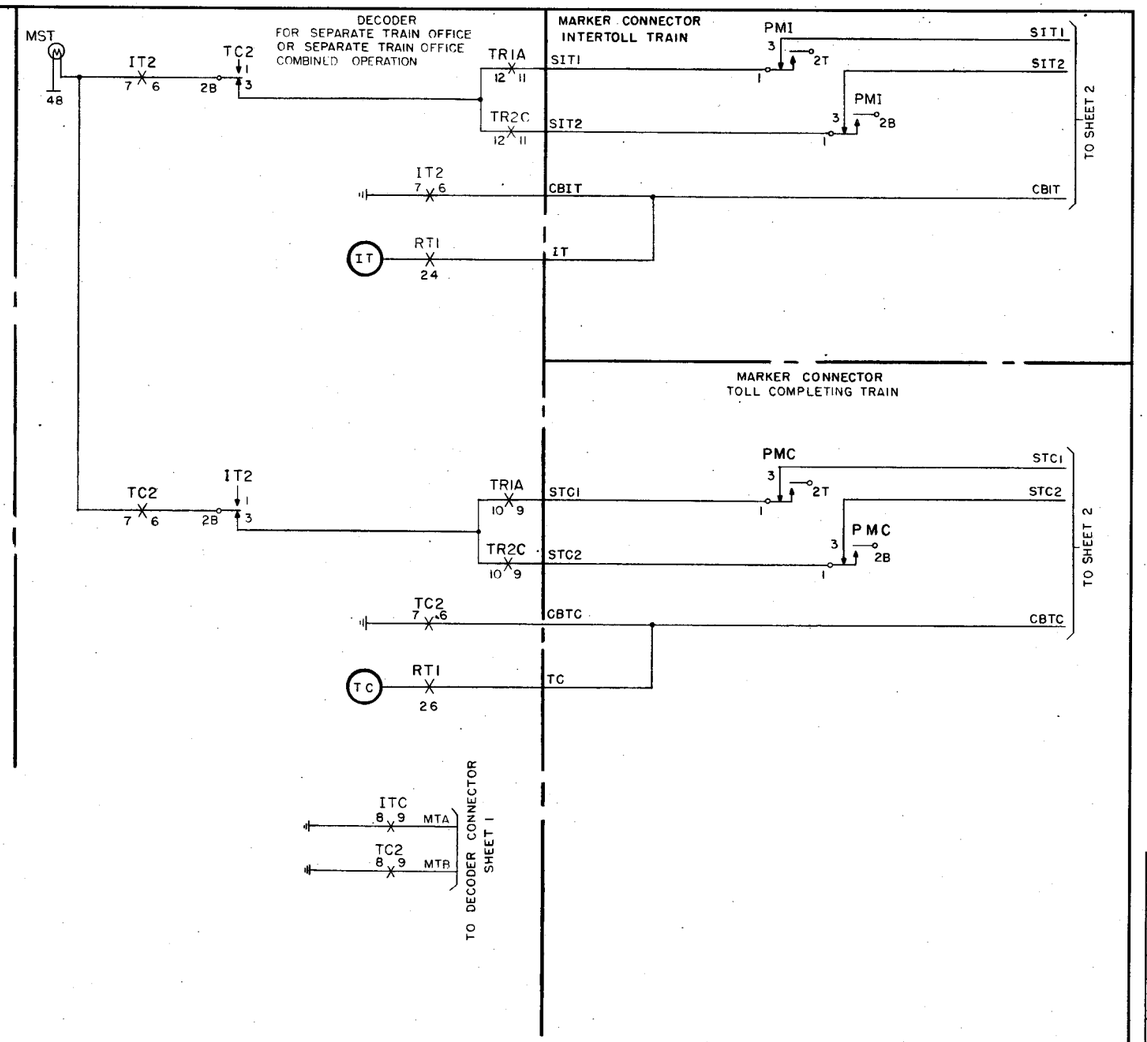

DECODER CKT.	SD-68340-01, ISS. 8
DECODER CONNECTOR CKT.	SD-68339-01, ISS. 6
MARKER CKT.	SD-68388-01, ISS. 8
* MARKER CONNECTOR CKT.	SD-68395-01, ISS. 5
MISC. CKT. TROUBLE RECORDER FRAME	SD-68392-01, ISS. 5

MARKER CONNECTOR

SEPARATE TRAIN OFFICE &
SEPARATE TRAIN OFFICE
COMBINED OPERATION

OS 188-1

2 SHEETS, SHEET 1

NO. 4A OR 4M TOLL

ORDER AS BSP ITEM MP-11650

ISSUE	1	2		
DATE	8-16-57	11-19-53		

2 SHEETS, SHEET 1

MP-11650

BELL TELEPHONE LABORATORIES, INC.

PRINTED IN U. S. A.

MP-11650 2 SHEETS, SHEET 2

ISSUE	DATE
1	6-16-51
2	11-19-53

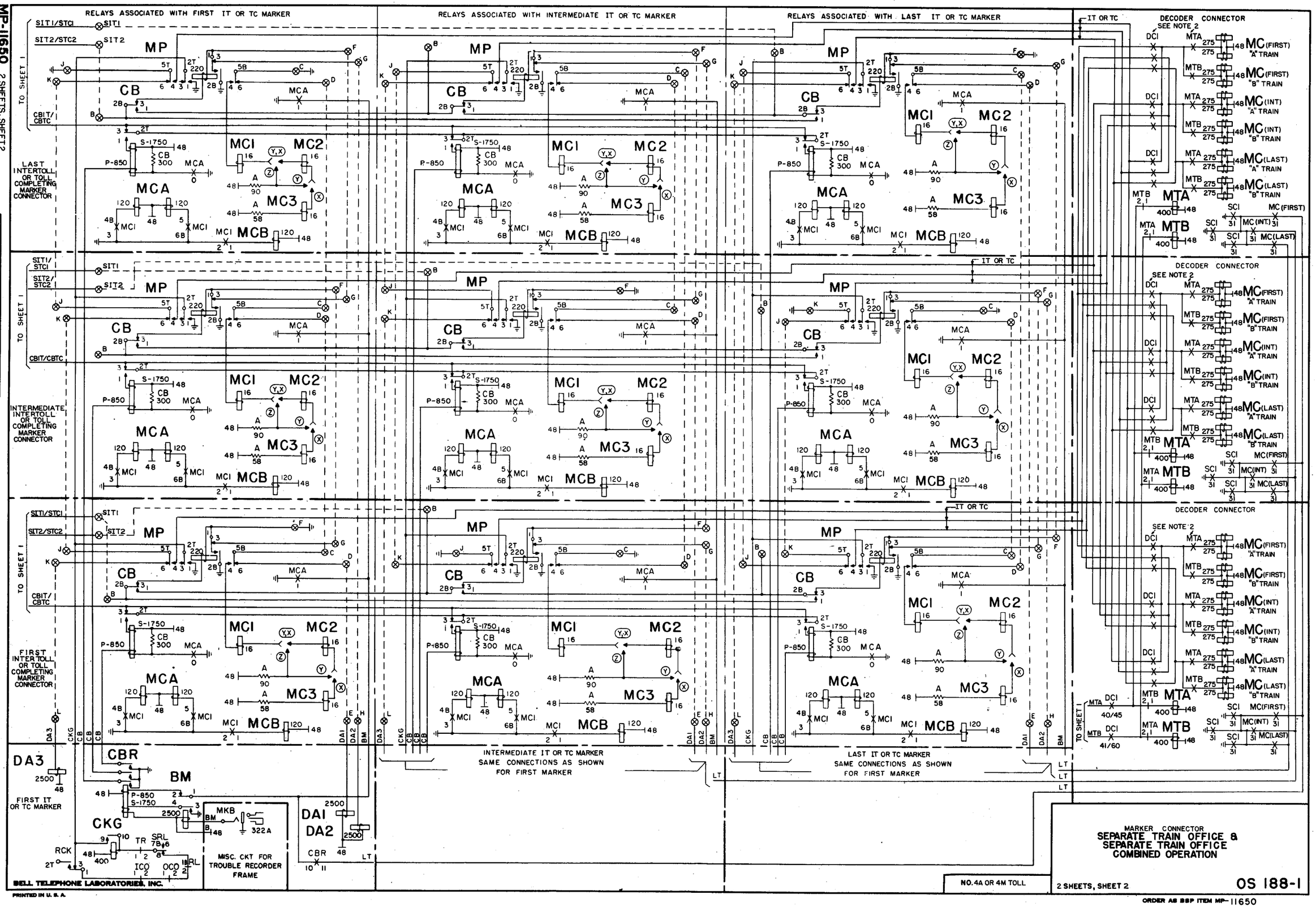

MARKER CONNECTOR
SEPARATE TRAIN OFFICE & SEPARATE TRAIN OFFICE COMBINED OPERATION

NO. 4A OR 4M TOLL

2 SHEETS, SHEET 2

OS 188-1

BELL TELEPHONE LABORATORIES, INC.
PRINTED IN U. S. A.

ORDER AS BSP ITEM MP-11650

NOTES:

1.

OS OPTION	FEATURE OR OPTION	SD OPTION	SD
Z	FOR OFFICES HAVING SIX OR LESS TRUNK BLOCK CONNECTORS.	Z	68395-01
Y	FOR OFFICES HAVING SEVEN TO EIGHTEEN TRUNK BLOCK CONNECTORS.	Y,Z	68395-01
X	FOR OFFICES HAVING NINETEEN TO THIRTY TRUNK BLOCK CONNECTORS.	V,X,Y	68395-01

2. CONTACT ASSIGNMENTS OF M-LEADS ON DCI RELAYS.

LEAD (MARKER NO.)	CONTACT NUMBER	
	EVEN DCI RELAYS	ODD DCI RELAYS
M0	10	15
M1	11	16
M2	12	17
M3	13	18
M4	14	19
M5	20	25
M6	21	26
M7	22	27
M8	23	28
M9	24	29

SEQUENCE CHART

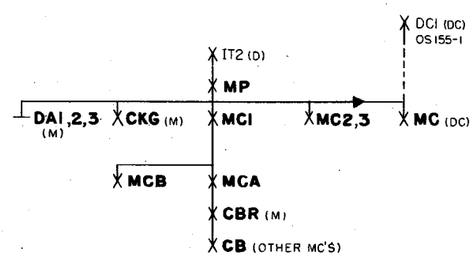

DECODER
(FOR COMBINED TRAIN OPERATION)

MARKER CONNECTOR-COMBINED TRAIN

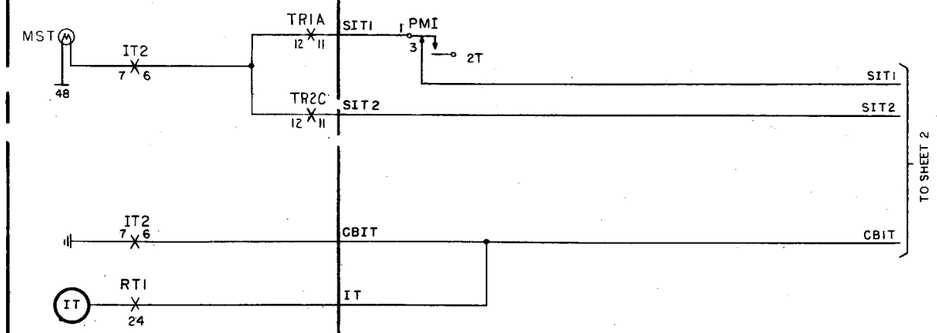

DECODER CKT.	SD-68340-01, ISS. 8
DECODER CONNECTOR CKT.	SD-68339-01, ISS. 6
MARKER CKT.	SD-68388-01, ISS. 8
*MARKER CONNECTOR CKT.	SD-68395-01, ISS. 4
MISC. CKT. TROUBLE RECORDER FRAME	SD-68392-01, ISS. 5

MARKER CONNECTOR

COMBINED TRAIN OPERATION

OS 188-2

2 SHEETS, SHEET 1

NO. 4A OR 4M TOLL

ORDER AS BSP ITEM MP-11651

ISSUE	1	2
DATE	8-16-57	11-9-53

2 SHEETS, SHEET 1

MP-11651

BELL TELEPHONE LABORATORIES, INC.

PRINTED IN U. S. A.

MP-11651

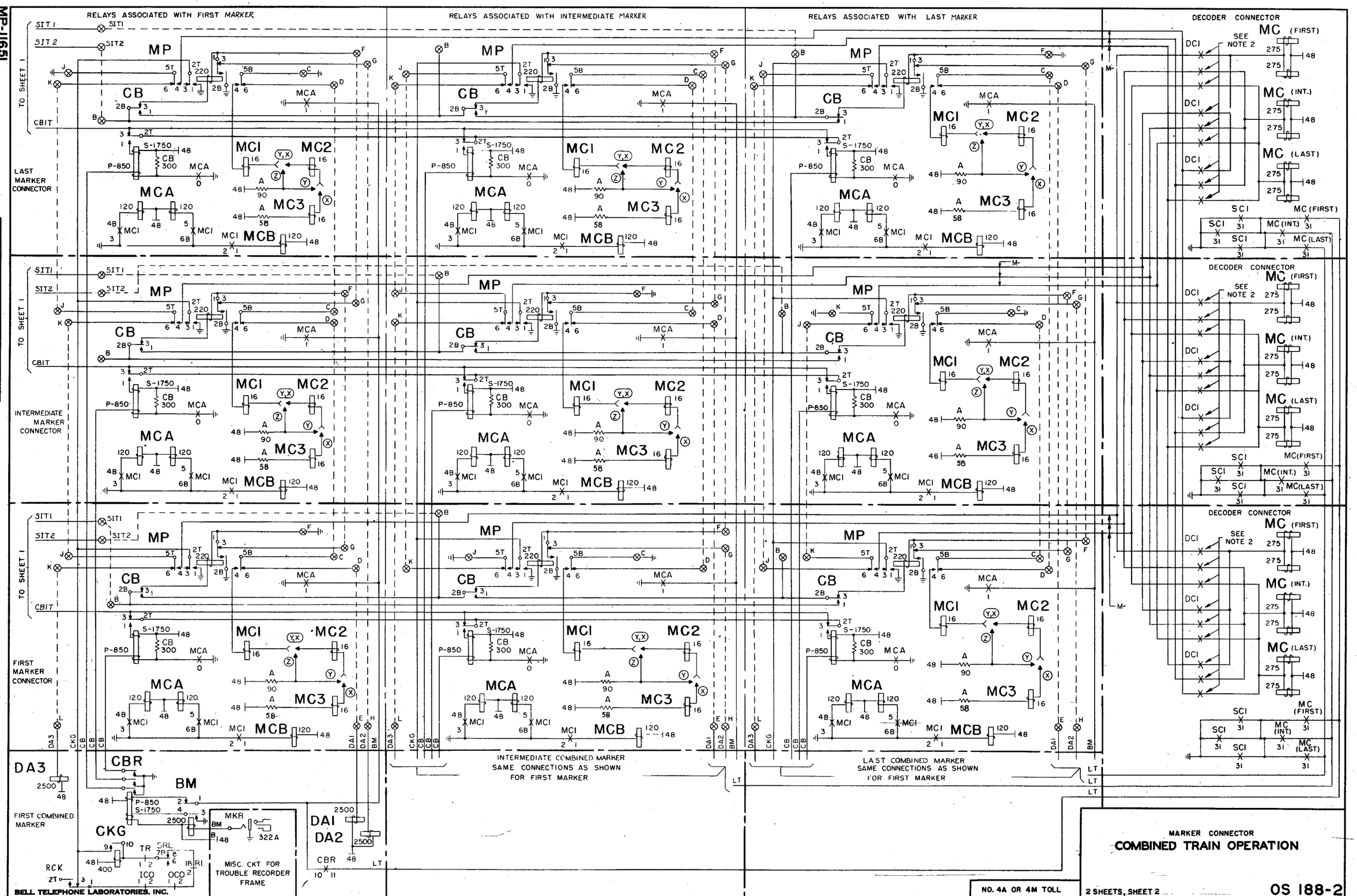

ISSUE	DATE
1	8-14-57
2	11-19-63

MARKER CONNECTOR

COMBINED TRAIN OPERATION

2 SHEETS, SHEET 2

OS 188-2

NO. 4A OR 4M TOLL

BELL TELEPHONE LABORATORIES, INC.

PRINTED IN U. S. A.

ORDER AS BSP ITEM MP-11651

MP-11668

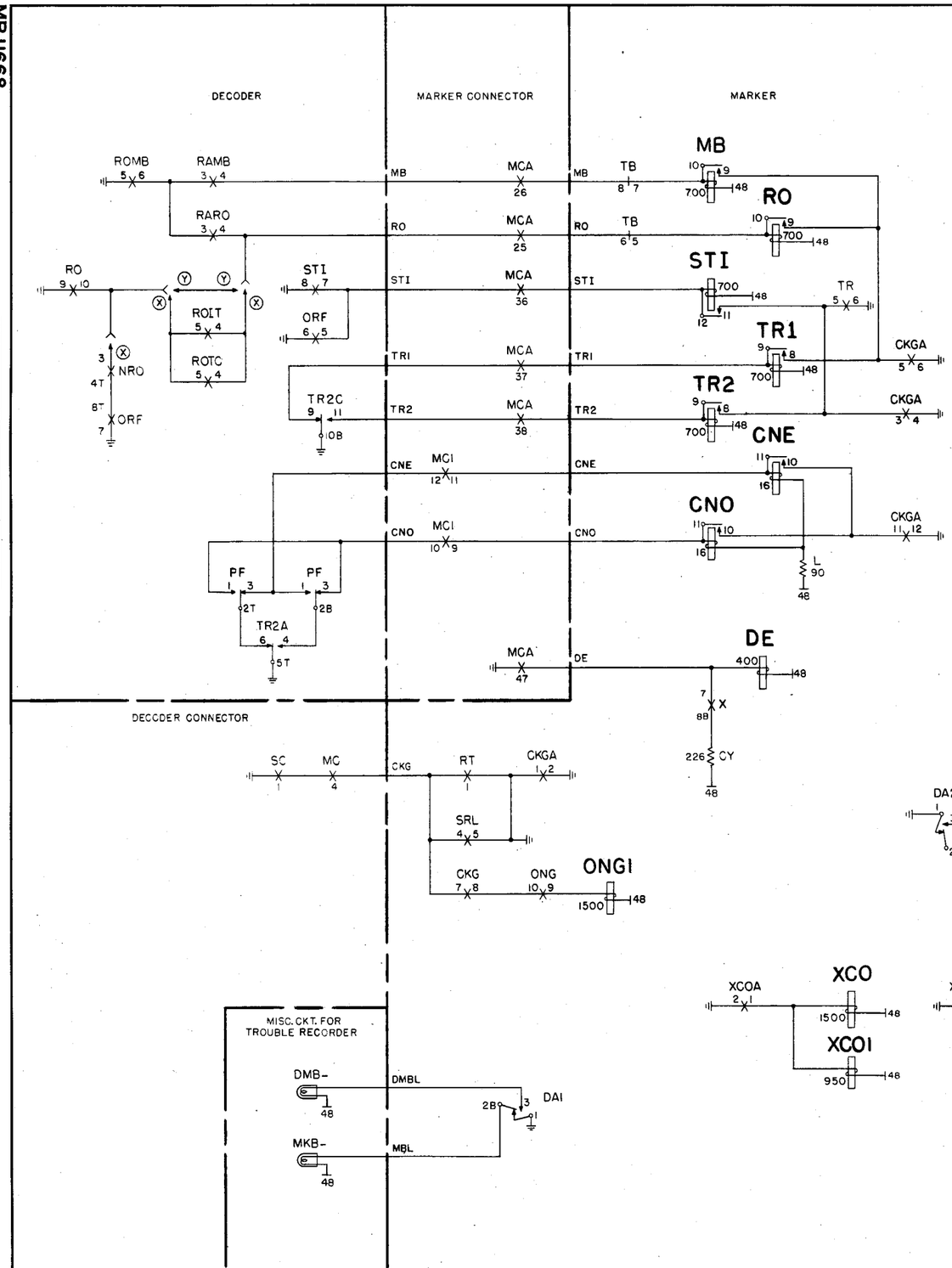

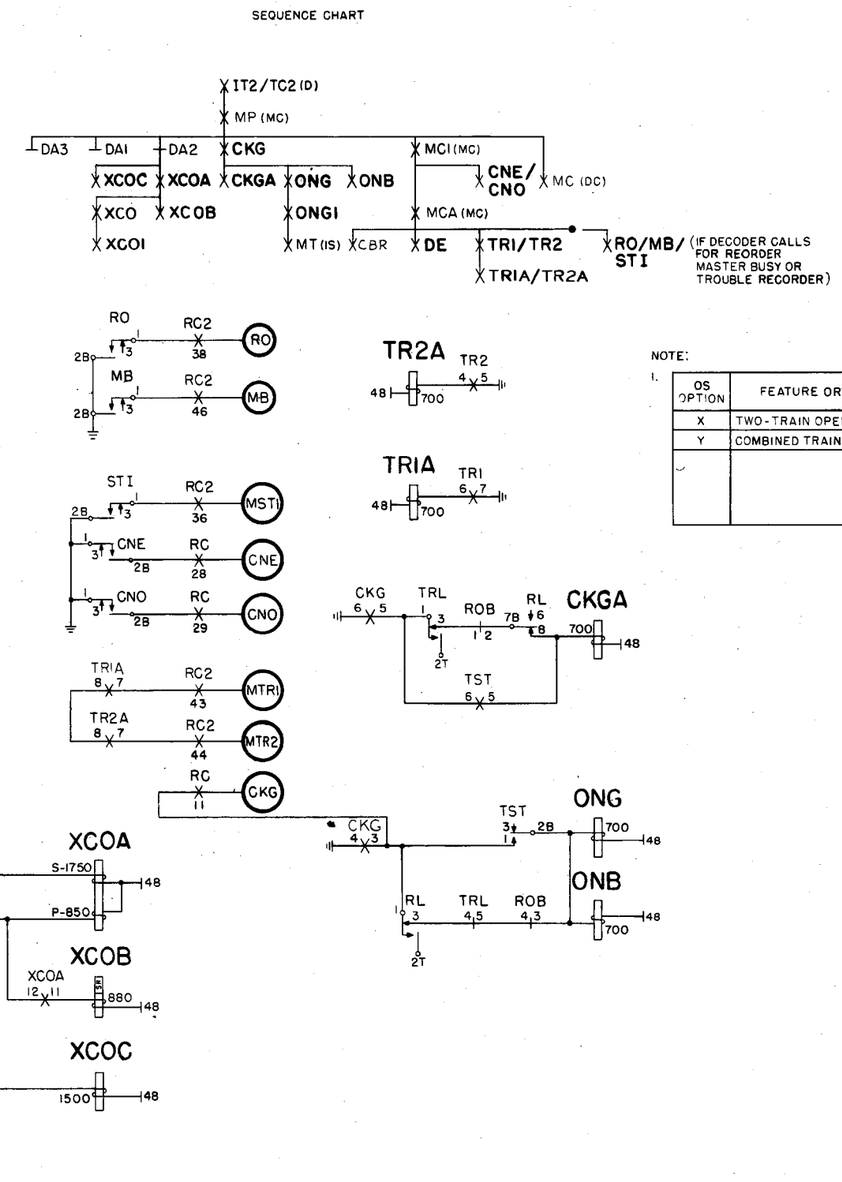

NOTE:

1.

OS OPTION	FEATURE OR OPTION	SD OPTION	SD
X	TWO-TRAIN OPERATION	X	68340-01
Y	COMBINED TRAIN OPERATION	FIG. A	68340-01

DECODER CONNECTOR CKT.	SD-68339-01, ISS. 2
DECODER CKT.	SD-68340-01, ISS. 2
INTERRUPTER FRAME CKT.	SD-68658-01, ISS. 15
MARKER CONNECTOR CKT.	SD-68395-01, ISS. 2
* MARKER CKT.	SD-68388-01, ISS. 2
MISC. CKT. FOR TROUBLE RECORDER	SD-68392-01, ISS. 2

ISSUE	DATE
1	12-5-74
8	8-10-75

MARKER

SEIZURE AND REGISTRATION OF MISC. INFORMATION FROM DECODER

NO. 4A TOLL

OS 190-1

BELL TELEPHONE LABORATORIES, INC.
PRINTED IN U. S. A.
ORDER AS BSP ITEM MP-11668

MP-11671

ISSUE	DATE
1	8-15-51

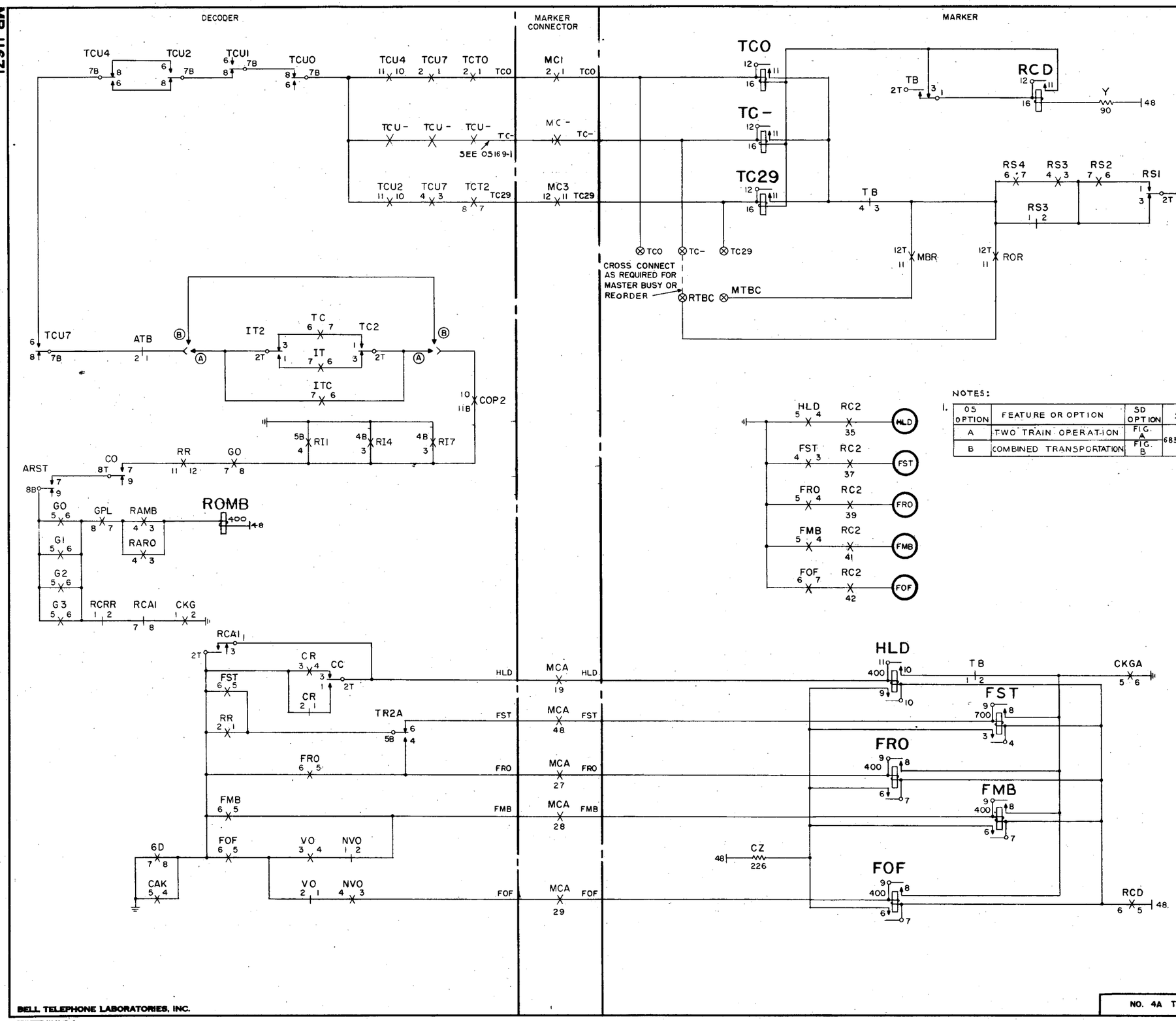

NOTES:

1.

05 OPTION	FEATURE OR OPTION	SD OPTION	SD
A	TWO TRAIN OPERATION	FIG. A	68340-01
B	COMBINED TRANSPORTATION	FIG. B	

TRUNK BLOCK CONNECTOR NUMBERS

TRUNK BLOCK CONN. RELAYS	TROUBLE RECORDER CUT IN RELAY CONTACTS (RCI)		TROUBLE RECORDER PUNCH	
TCO	2	5	TCTO	TCUO
TC1	2	6	TCTO	TCU1
TC2	2	7	TCTO	TCU2
TC3	2	8	TCTO	TCU3
TC4	2	9	TCTO	TCU4
TC5	2	10	TCTO	TCU5
TC6	2	11	TCTO	TCU6
TC7	2	12	TCTO	TCU7
TC8	2	13	TCTO	TCU8
TC9	2	14	TCTO	TCU9
TC10	3	5	TCT1	TCUO
TC11	3	6	TCT1	TCU1
TC12	3	7	TCT1	TCU2
TC13	3	8	TCT1	TCU3
TC14	3	9	TCT1	TCU4
TC15	3	10	TCT1	TCU5
TC16	3	11	TCT1	TCU6
TC17	3	12	TCT1	TCU7
TC18	3	13	TCT1	TCU8
TC19	3	14	TCT1	TCU9
TC20	4	5	TCT2	TCUO
TC21	4	6	TCT2	TCU1
TC22	4	7	TCT2	TCU2
TC23	4	8	TCT2	TCU3
TC24	4	9	TCT2	TCU4
TC25	4	10	TCT2	TCU5
TC26	4	11	TCT2	TCU6
TC27	4	12	TCT2	TCU7
TC28	4	13	TCT2	TCU8
TC29	4	14	TCT2	TCU9

DECODER CKT.	SD-68340-01, ISS. 2
DECODER CONNECTOR CKT.	SD-68339-01, ISS. 2
* MARKER CKT.	SD-68388-01, ISS. 2
MARKER CONNECTOR CKT.	SD-68395-01, ISS. 2

MARKER

REGISTRATION CONTROL

NO. 4A TOLL

OS 191-1

BELL TELEPHONE LABORATORIES, INC.

PRINTED IN U. S. A.

ORDER AS BSP ITEM MP-11671

MP-11672

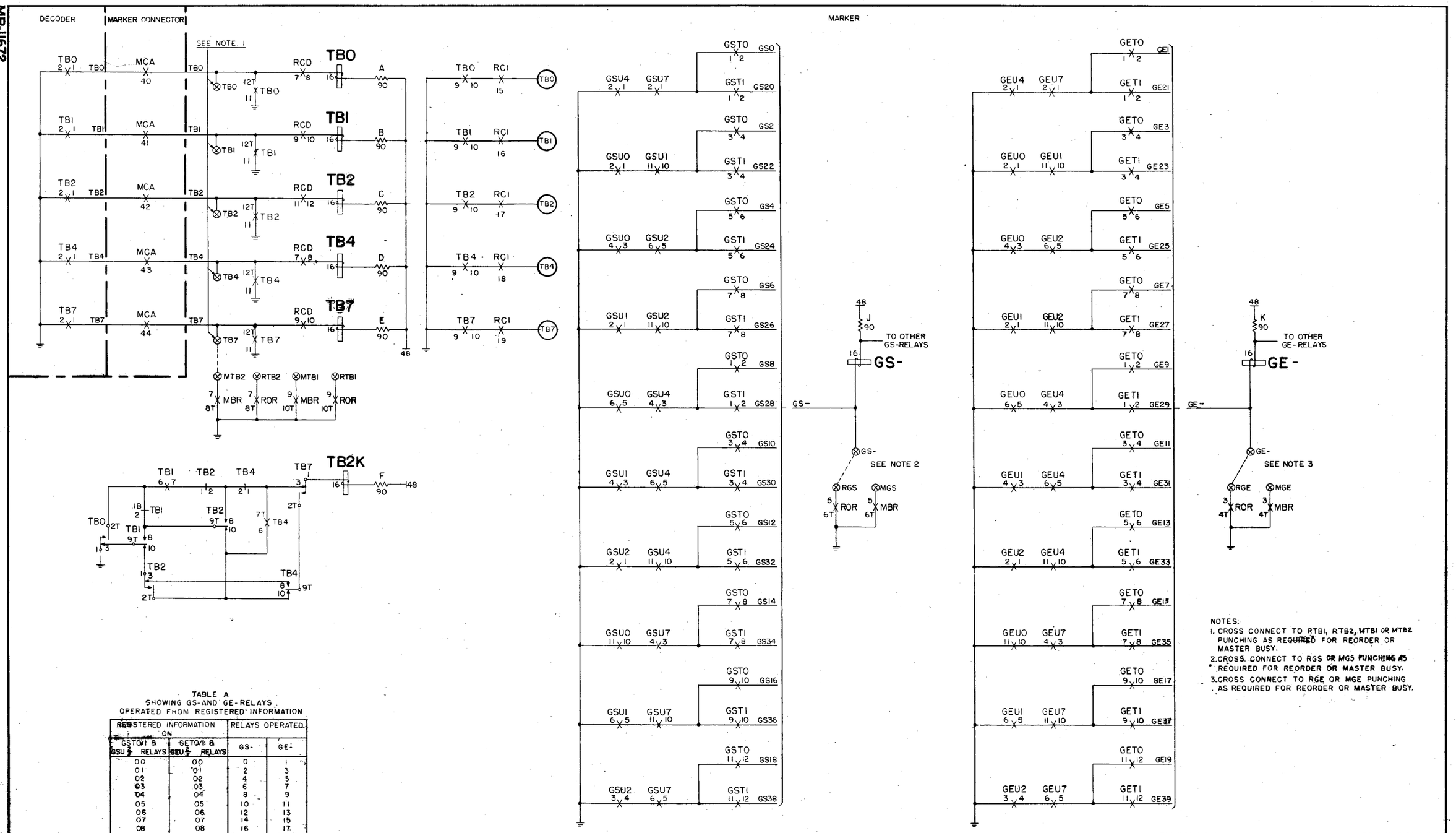

NOTES:

1. CROSS CONNECT TO RTB1, RTB2, MTB1 OR MTB2 PUNCHING AS REQUIRED FOR REORDER OR MASTER BUSY.
2. CROSS CONNECT TO RGS OR MGS PUNCHING AS REQUIRED FOR REORDER OR MASTER BUSY.
3. CROSS CONNECT TO RGE OR MGE PUNCHING AS REQUIRED FOR REORDER OR MASTER BUSY.

TABLE A
SHOWING GS- AND GE- RELAYS
OPERATED FROM REGISTERED INFORMATION

REGISTERED INFORMATION ON		RELAYS OPERATED	
GSTO/I & GSU RELAYS	GETO/I & GEU RELAYS	GS-	GE-
00	00	0	1
01	01	2	3
02	02	4	5
03	03	6	7
04	04	8	9
05	05	10	11
06	06	12	13
07	07	14	15
08	08	16	17
09	09	18	19
10	10	20	21
11	11	22	23
12	12	24	25
13	13	26	27
14	14	28	29
15	15	30	31
16	16	32	33
17	17	34	35
18	18	36	37
19	19	38	39

ISSUE	1	1 & 2	1 & 2
DATE	9-10-51	9-8-61	

DECODER CKT. SD-68340-01, ISS. 2
MARKER CKT. SD-68368-01, ISS. 2
MARKER CONN. CKT. SD-68395-01, ISS. 2

MARKER

TRUNK GROUP START & END

NO. 4A TOLL

OS 192-1

BELL TELEPHONE LABORATORIES, INC.
PRINTED IN U. S. A.
ORDER AS BSP ITEM MP-11672

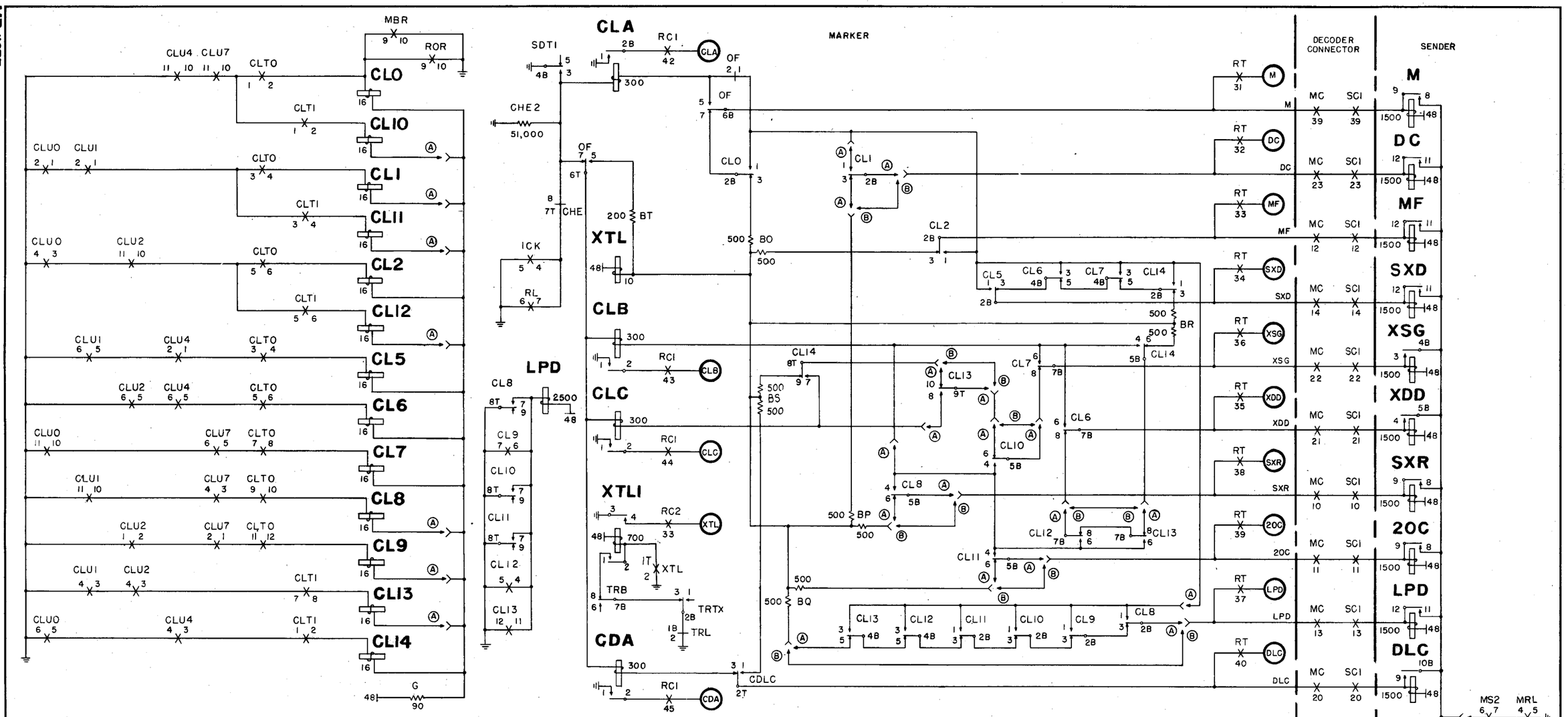

MARKER CLASS & CHECK RELAYS OPERATED		SENDER RELAY OPERATION AND FUNCTION: M — OGT. TO MANUAL OFFICE OR OPR. TRUNK	DC — OUTPULSE DIRECT CURRENT BASIS	MF — OUTPULSE MULTI-FREQUENCY BASIS	SXD — OUTPULSE TO OGT. SIMPLEX BASIS	XDD — EXPECT DELAY BEFORE OUT-PULSING	XSG — EXPECT STOP SIG. DURING OUT-PULSING	LPD — OUTPULSE LOOP DIAL BASIS	SXR — SIMPLEX RING AT END OF OUT-PULSING	20C — 20-CYCLE RING AT END OF OUT-PULSING	DLC — DELAY TRUNK LOOP CLOSURE	MARKER CDLC AND CDA RELAY OPERATION
CL0	CLA	X									**	**
CL1	CLA		X									X
CL2	CLA			X							**	**
CL5	CLA				X							X
CL6	CLA, B				X	X						X
CL7	CLA, B				X		X					X
CL8 *	CLA, B							X	X		**	**
CL9 *	CLA							X			**	**
CL10 *	CLA, B						X	X			**	**
CL11 *	CLA, B							X		X	**	**
CL12 *	CLA, B					X		X			**	**
CL13 *	CLA, B, C					X	X	X			**	**
CL14	CLA, B, C				X	X	X					X

X DENOTES RELAY OPERATED
** OPTIONAL - YES OR NO.
* PROVIDED ONLY IN TOLL COMPLETING OR COMBINED MARKERS.

OS OPTION	FEATURE OR OPTION	SD OPTION	SD
A	FOR COMBINED MARKERS	X	68388-01
	FOR TOLL COMPLETING MARKERS	Y	
B	FOR INTERTOLL MARKERS	Z	
R	FOR MF SENDERS	—	68222-01
S	FOR DP SENDERS	—	68221-01

DECODER CONNECTOR CKT. SD-68339-01, ISS. 2
DP INCOMING SENDER CKT. SD-68221-01, ISS. 12
*MARKER CKT. SD-68388-01, ISS. 2
MF INCOMING SENDER CKT. SD-68222-01, ISS. 12

MARKER
CLASS INFORMATION

NO. 4A TOLL

OS 193-1

MP-11673

ISSUE	1	2	3
DATE	8-20-57		

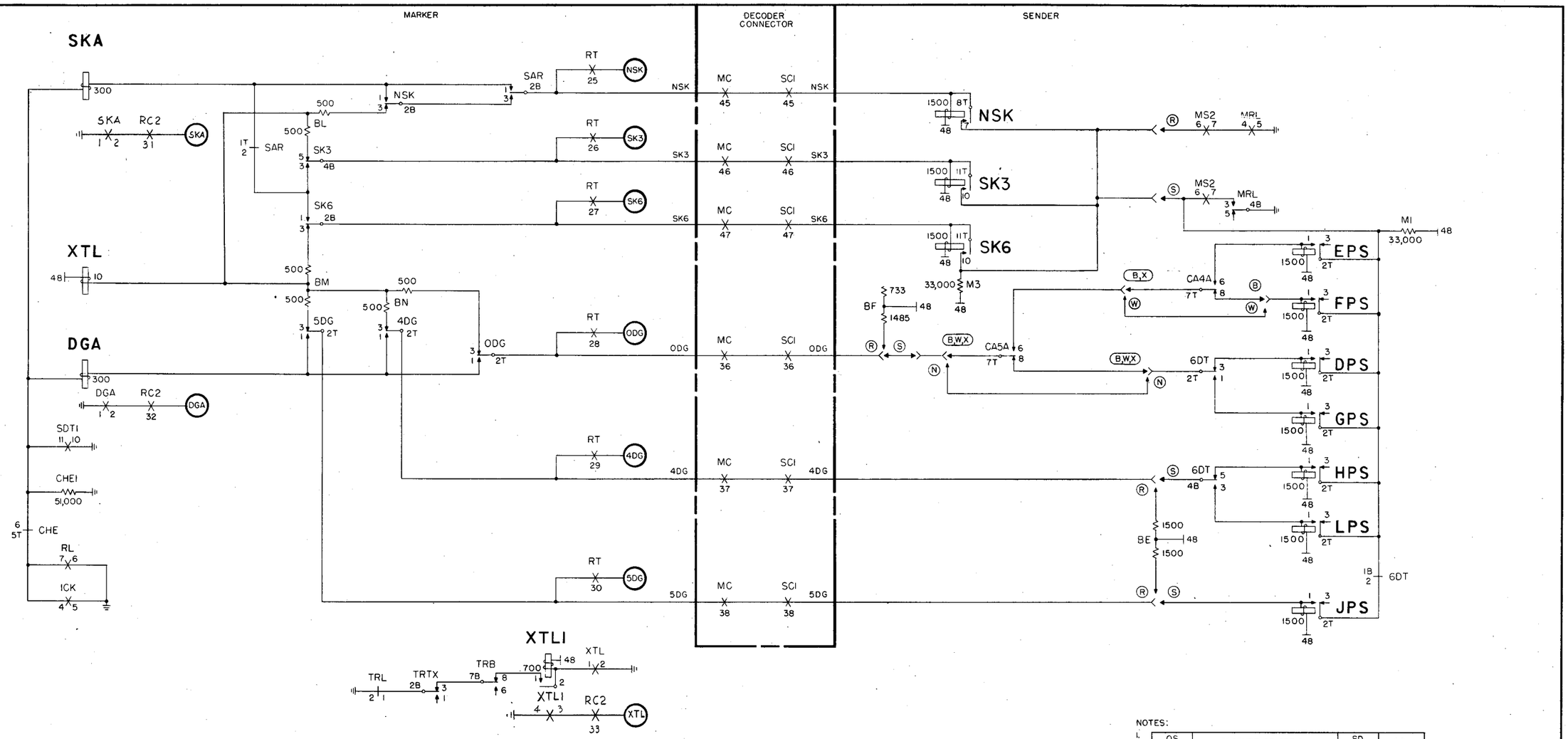

NOTES:
1.

OS OPTION	FEATURE OR OPTION	SD OPTION	SD
B	2 & 3-DIGIT TX	B	
N	1-DIGIT TX	LOOPED WIRING	68221-01
R	FOR MF SENDERS		68222-01
S	FOR DP SENDERS		
W	3-DIGIT TX	W	68221-01
X	2-DIGIT TX	X	

	DECODER CONNECTOR CKT.	SD-68339-01, ISS. 2
	DP INCOMING SENDER CKT.	SD-68221-01, ISS. 12
*	MARKER CKT.	SD-68388-01, ISS. 2
	MF INCOMING SENDER CKT.	SD-68222-01, ISS. 12

MARKER
DIGIT AND VARIABLE SPILL CONTROL

NO. 4A TOLL

OS 194-1

MP-11674

ISSUE	DATE
1	8-5-68
2	9-7-71

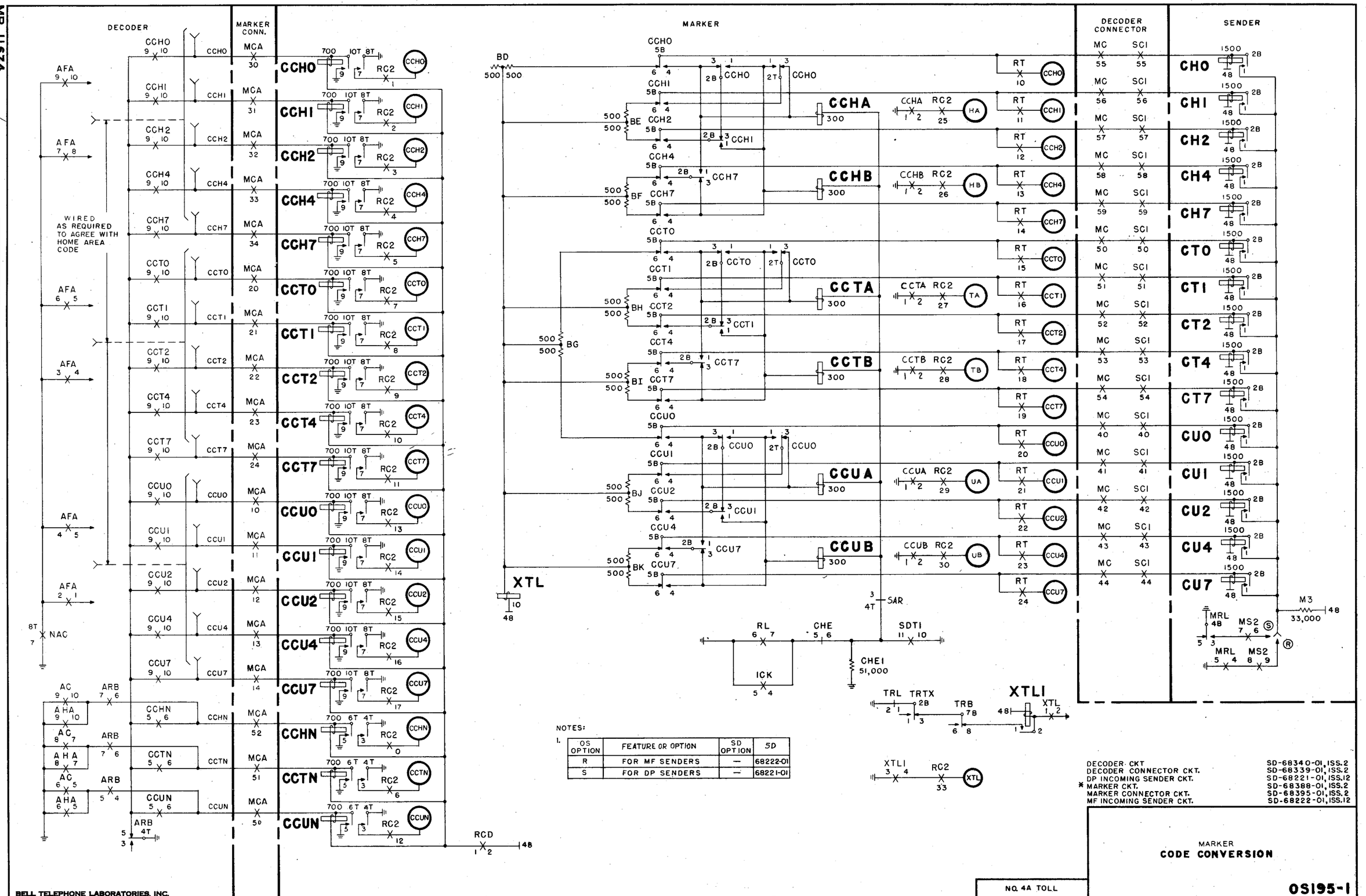

NOTES:

1.

OS OPTION	FEATURE OR OPTION	SD OPTION	SD
R	FOR MF SENDERS	—	68222-01
S	FOR DP SENDERS	—	68221-01

DECODER CKT	SD-68340-01, ISS.2
DECODER CONNECTOR CKT.	SD-68339-01, ISS.2
DP INCOMING SENDER CKT.	SD-68221-01, ISS.12
* MARKER CKT.	SD-68388-01, ISS.2
MARKER CONNECTOR CKT.	SD-68395-01, ISS.2
MF INCOMING SENDER CKT.	SD-68222-01, ISS.12

MARKER
CODE CONVERSION

NO. 4A TOLL

OS195-1

BELL TELEPHONE LABORATORIES, INC.
PRINTED IN U. S. A.
ORDER AS BSP ITEM MP-11674

MP-11687

ISSUE	DATE
1	9-19-71
2	4-28-72

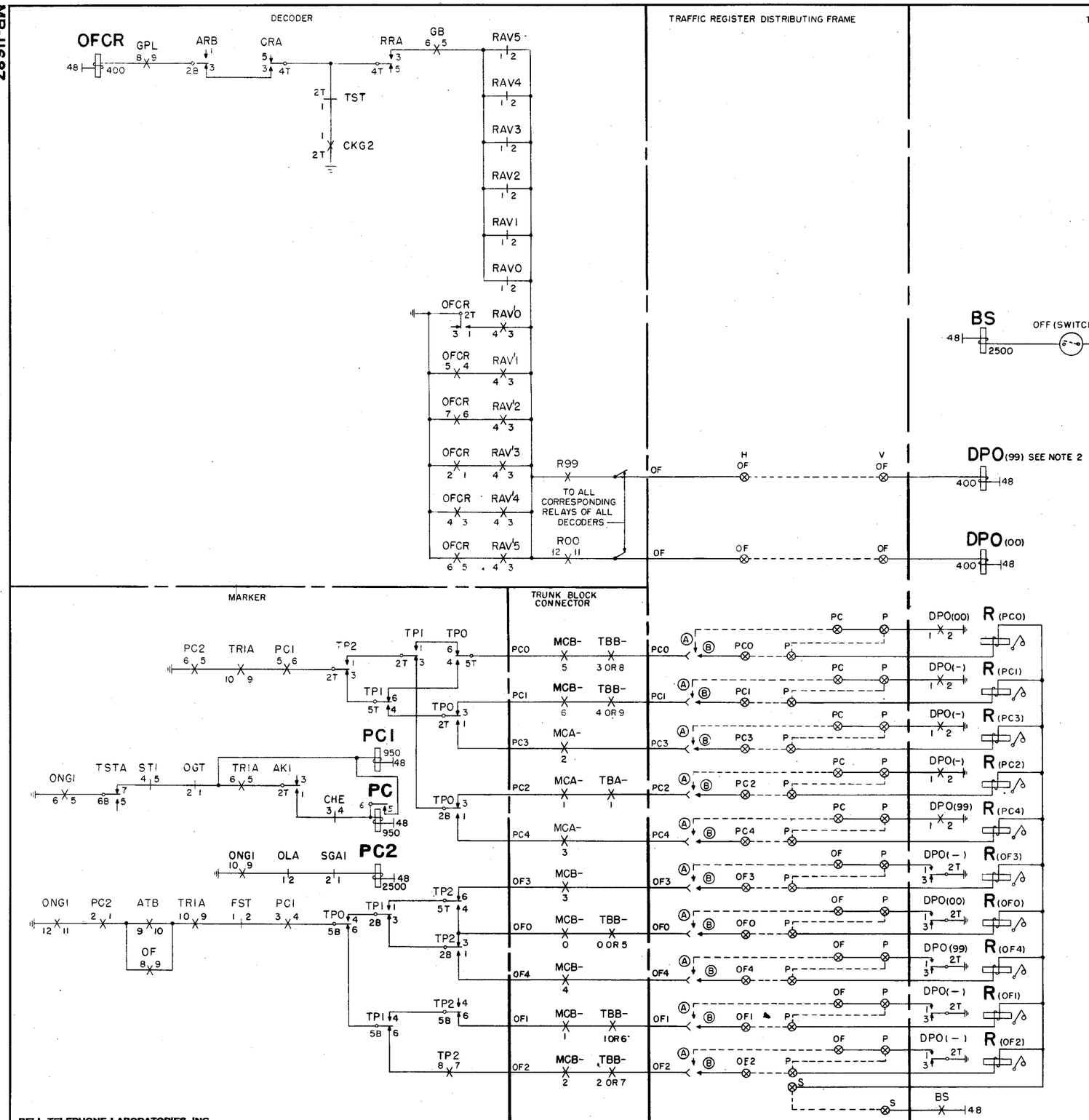

NOTES:

1.

OS OPTION	FEATURE OR OPTION	SD OPTION	SD
A	WHEN TRUNK GROUP HAS A ROUTE RELAY IN THE DECODER ASSOCIATED WITH IT.	FIG. 35	68412-01
B	WHEN TRUNK GROUP DOES NOT HAVE A ROUTE RELAY IN THE DECODER ASSOCIATED WITH IT.		

2. OPERATION OF PC & OF REGISTERS:

MARKER	TRAFFIC REGISTER	
TP-RELAY OPERATED	PC REGISTER OPERATED	OF REGISTER OPERATED
0	PC0	OF0
1	PC1	OF1
2	PC2	OF2
0 & 1	PC3	OF3
0 & 2	PC4	OF4
1 & 2	PC0	NONE
0, 1 & 2	NONE	OF0

3. DPO RELAYS FURNISHED 1 PER TRUNK GROUP ASSOCIATED WITH DECODER ROUTE RELAYS.

4. NUMBERS IN PARENTHESES ARE ARBITRARILY ASSIGNED TO INDICATE ASSOCIATION WITH CORRESPONDINGLY NUMBERED ROUTE RELAYS IN THE DECODER.

DECODER CKT	SD-68340-01, ISS. 8
MARKER CKT.	SD-68388-01, ISS. 7
TRAFFIC REGISTER CKT.	SD-68412-01, ISS. 7
TRUNK BLOCK CONN. CKT.	SD-68027-01, ISS. 19

DECODER-MARKER

TRUNK GROUP PEG COUNT AND TRUNK GROUP OVERFLOW REGISTRATION

NO. 4M TOLL

OS 196-1

BELL TELEPHONE LABORATORIES, INC.
PRINTED IN U. S. A.
ORDER AS BSP ITEM MP-11687

MP-11681

ISSUE	DATE
1	9-13-51

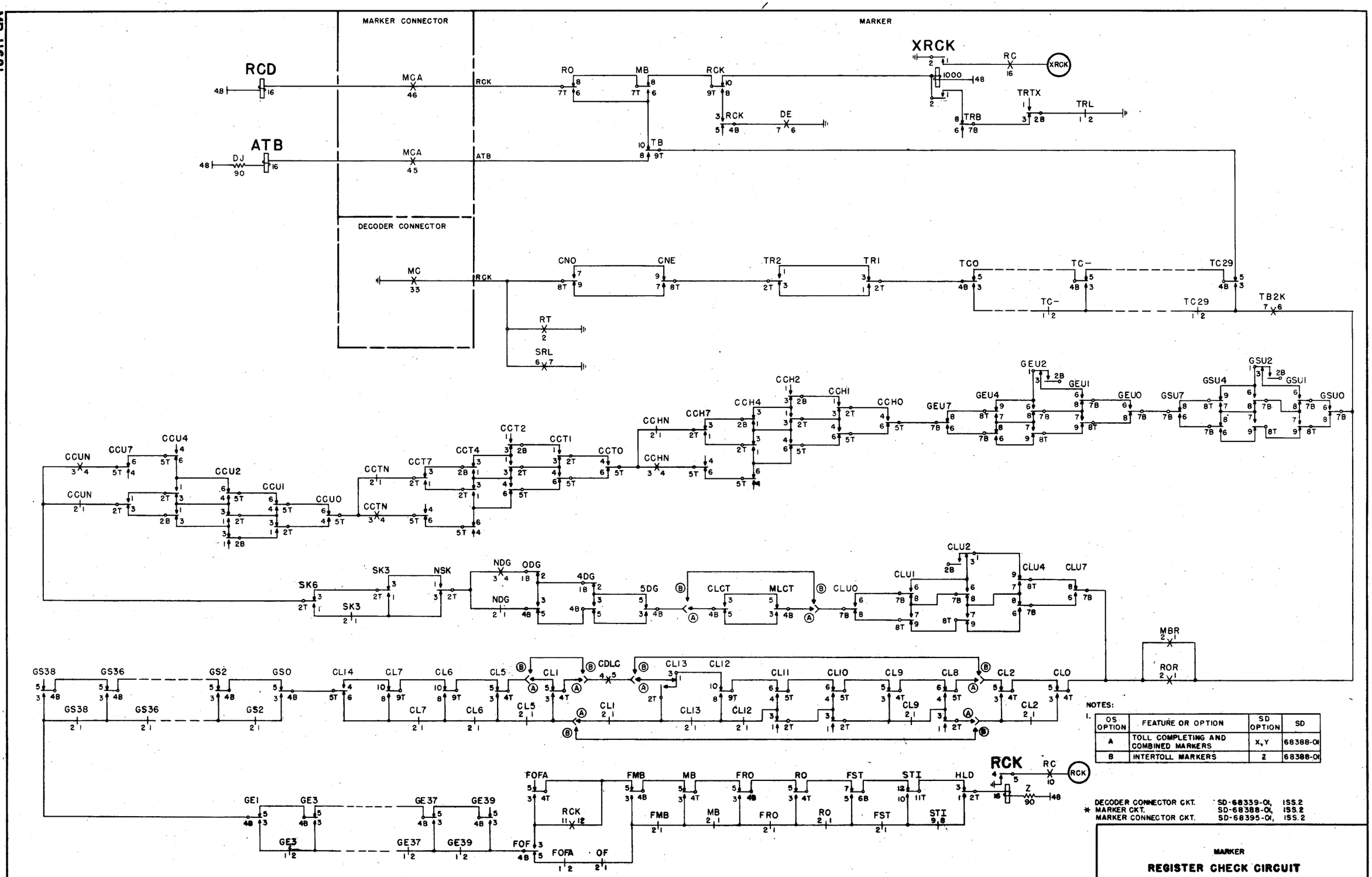

NOTES:

1.

OS OPTION	FEATURE OR OPTION	SD OPTION	SD
A	TOLL COMPLETING AND COMBINED MARKERS	X, Y	68388-01
B	INTERTOLL MARKERS	Z	68388-01

DECODER CONNECTOR CKT.	SD-68339-01,	ISS.2
* MARKER CKT.	SD-68388-01,	ISS.2
MARKER CONNECTOR CKT.	SD-68395-01,	ISS.2

MARKER

REGISTER CHECK CIRCUIT

NO. 4A TOLL

OS 197-1

BELL TELEPHONE LABORATORIES, INC.
PRINTED IN U. S. A.
ORDER AS BSP ITEM MP-11681

MP-11692

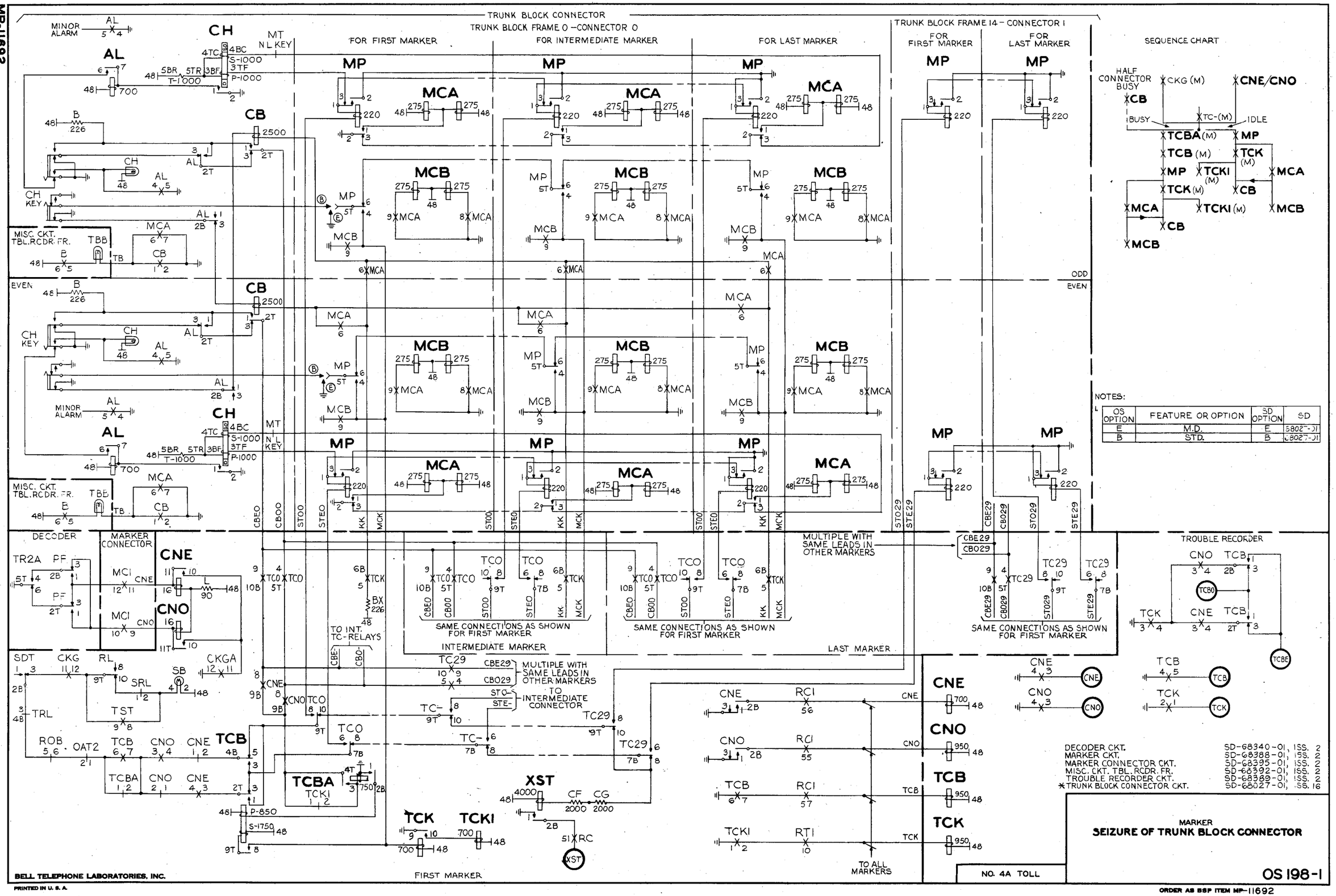

ISSUE	DATE
1	5-10-51

MP-11693

ISSUE	DATE
1	6-30-51

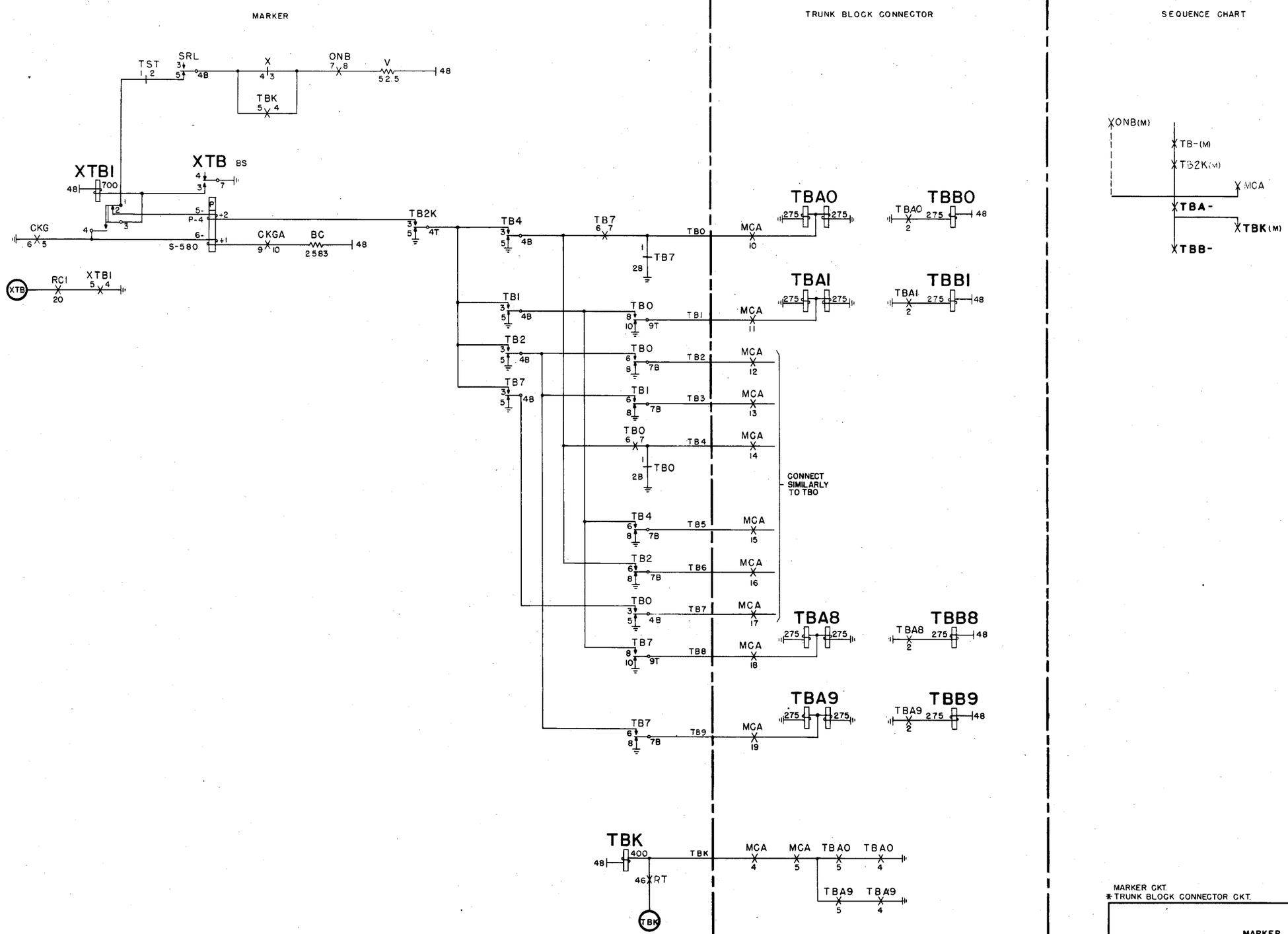

MARKER CKT. SD-68388-01, ISS. 2
* TRUNK BLOCK CONNECTOR CKT. SD-68027-01, ISS. 16

MARKER
TRUNK BLOCK RELAY OPERATION

NO. 4A TOLL

OS 199-1

BELL TELEPHONE LABORATORIES, INC.
PRINTED IN U. S. A.
ORDER AS BSP ITEM MP- 11693

MP-11689

ISSUE	DATE
1	9-14-51

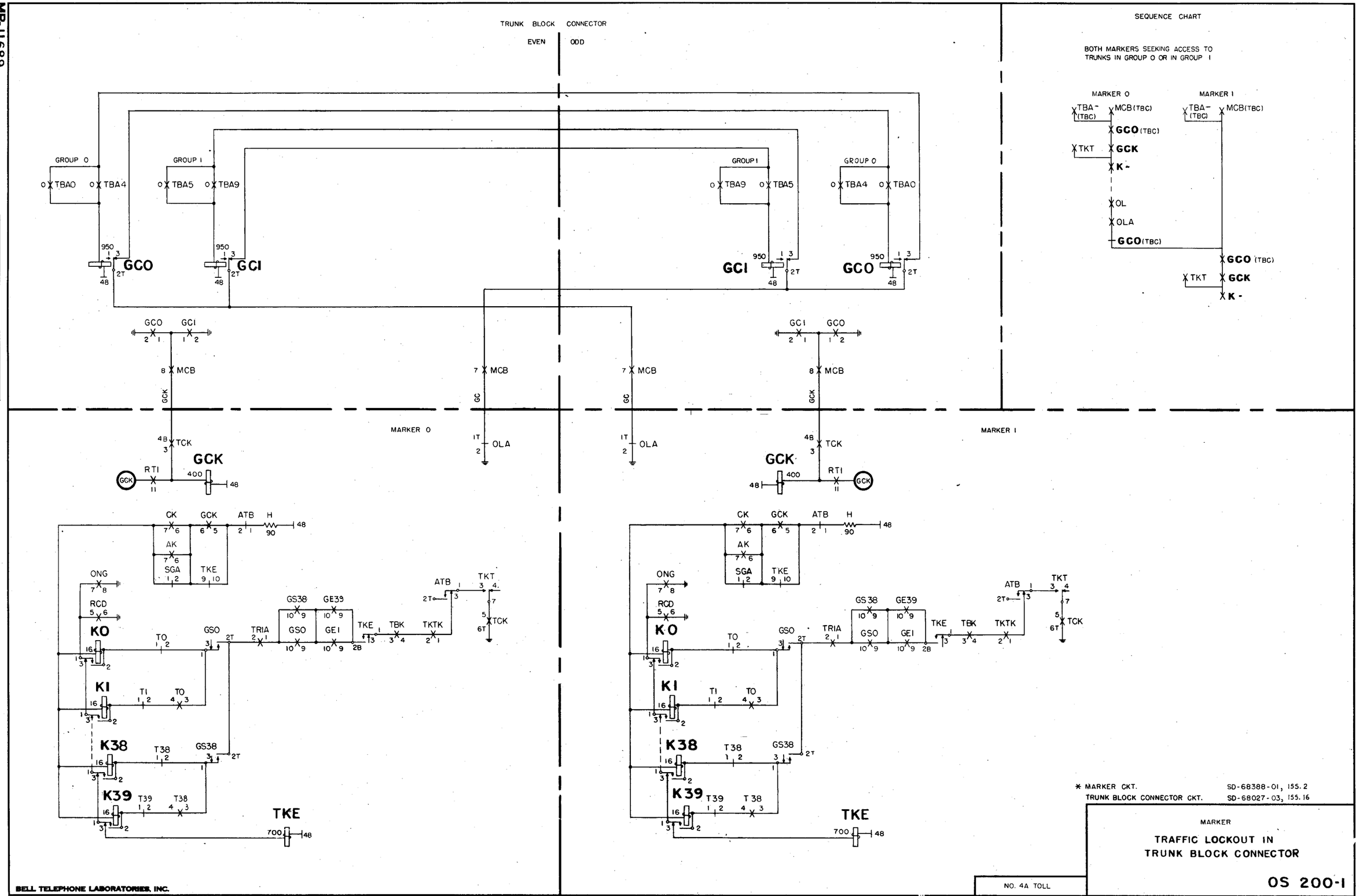

* MARKER CKT. SD-68388-01, 155.2
TRUNK BLOCK CONNECTOR CKT. SD-68027-03, 155.16

MARKER

TRAFFIC LOCKOUT IN
TRUNK BLOCK CONNECTOR

OS 200-1

NO. 4A TOLL

BELL TELEPHONE LABORATORIES, INC.
PRINTED IN U. S. A.
ORDER AS BSP ITEM MP-11689

MP-11690

ISSUE		
DATE		
9-17-51	1	A.S.H. R.B.B.

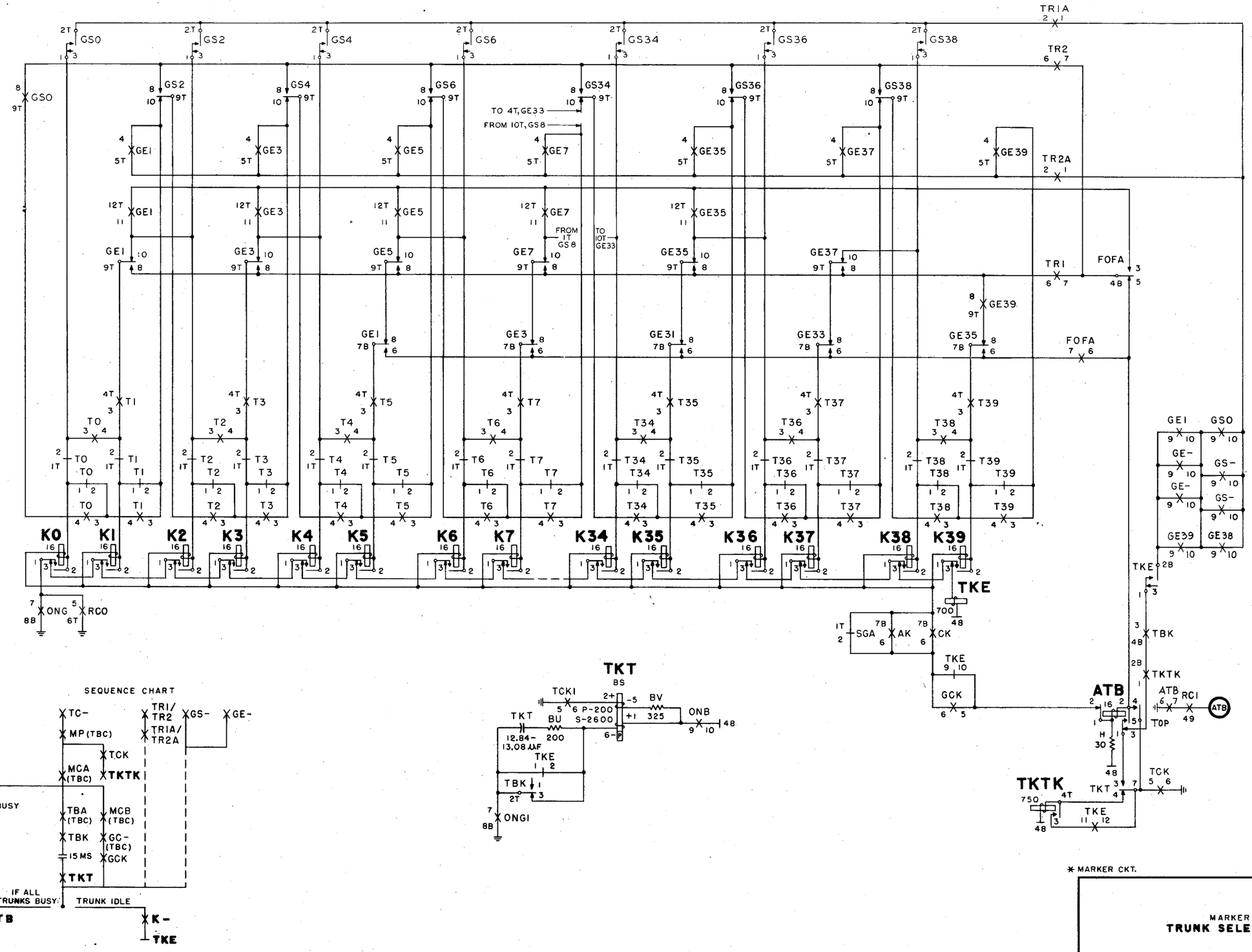

SEQUENCE CHART

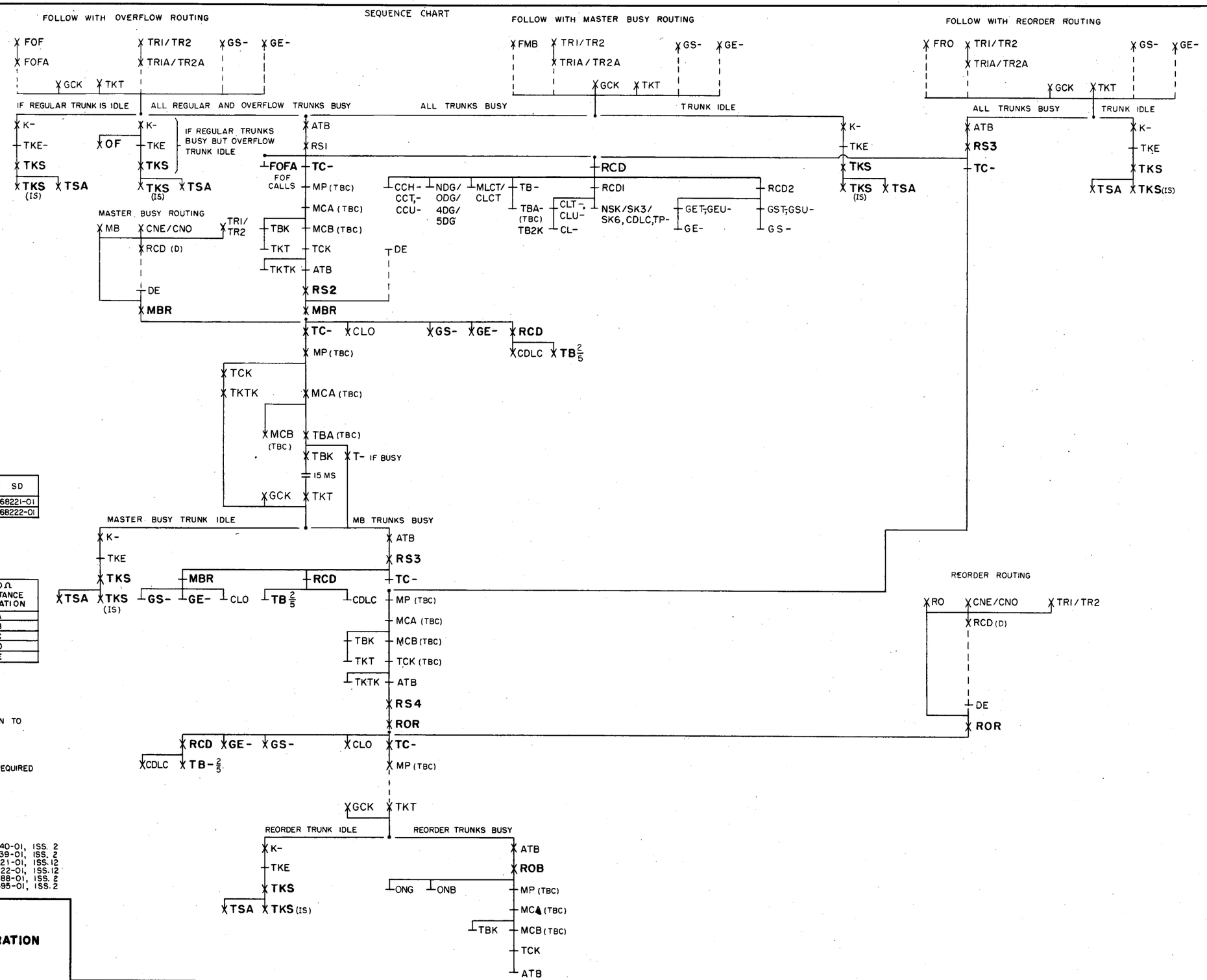

NOTES:

1.

OS OPTION	FEATURE OR OPTION	SD OPTION	SD
A	FOR DP SENDERS		68221-01
B	FOR MF SENDERS		68222-01

2

TB RELAY	RCD CONTACTS TO TERMINAL	RCD CONTACTS TO TB-RELAY	90Ω RESISTANCE DESIGNATION
TB0	7B	8B	A
TB1	9B	10B	B
TB2	11B	12B	C
TB4	9T	10T	D
TB7	11T	12T	E

3. DECODER FURNISHES NEW ROUTING INFORMATION TO MARKER

4. CROSS CONNECT MTBC OR RTBC TO TC- AS REQUIRED

DECODER CKT	SD-68340-01, ISS. 2
DECODER CONNECTOR CKT.	SD-68339-01, ISS. 2
INCOMING SENDER CKT. DP	SD-68221-01, ISS. 12
INCOMING SENDER CKT. MF	SD-68222-01, ISS. 12
*MARKER CKT.	SD-68388-01, ISS. 2
MARKER CONNECTOR CKT.	SD-68395-01, ISS. 2

MARKER

ROUTE SWITCHING RELAY OPERATION

OS 202-1

3 SHEETS, SHEET 1

NO. 4A TOLL

ORDER AS BSP ITEM MP-11694

ISSUE	1	2
DATE	9-20-51	

3 SHEETS, SHEET 1

MP-11694

BELL TELEPHONE LABORATORIES, INC.

PRINTED IN U. S. A.

MP-11694

3 SHEETS, SHEET 2

ISSUE	DATE
1	9-20-56

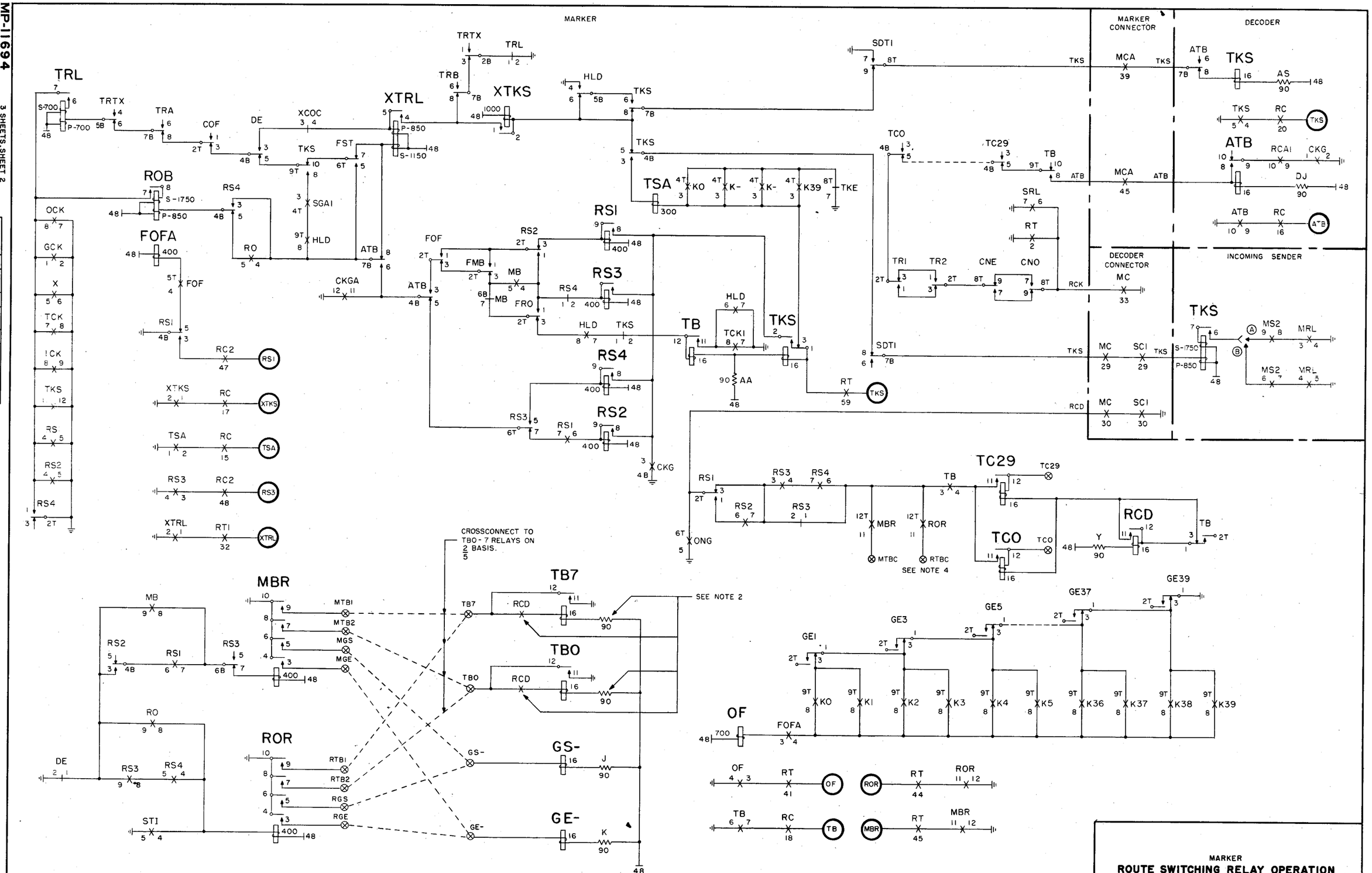

MARKER

ROUTE SWITCHING RELAY OPERATION

NO. 4A TOLL

3 SHEETS, SHEET 2

OS 202-1

BELL TELEPHONE LABORATORIES, INC.

PRINTED IN U. S. A.

ORDER AS BSP ITEM MP-11694

MP-11694

3 SHEETS, SHEET 3

ISSUE	1			
DATE	9-20-51			

SEQUENCE CHART

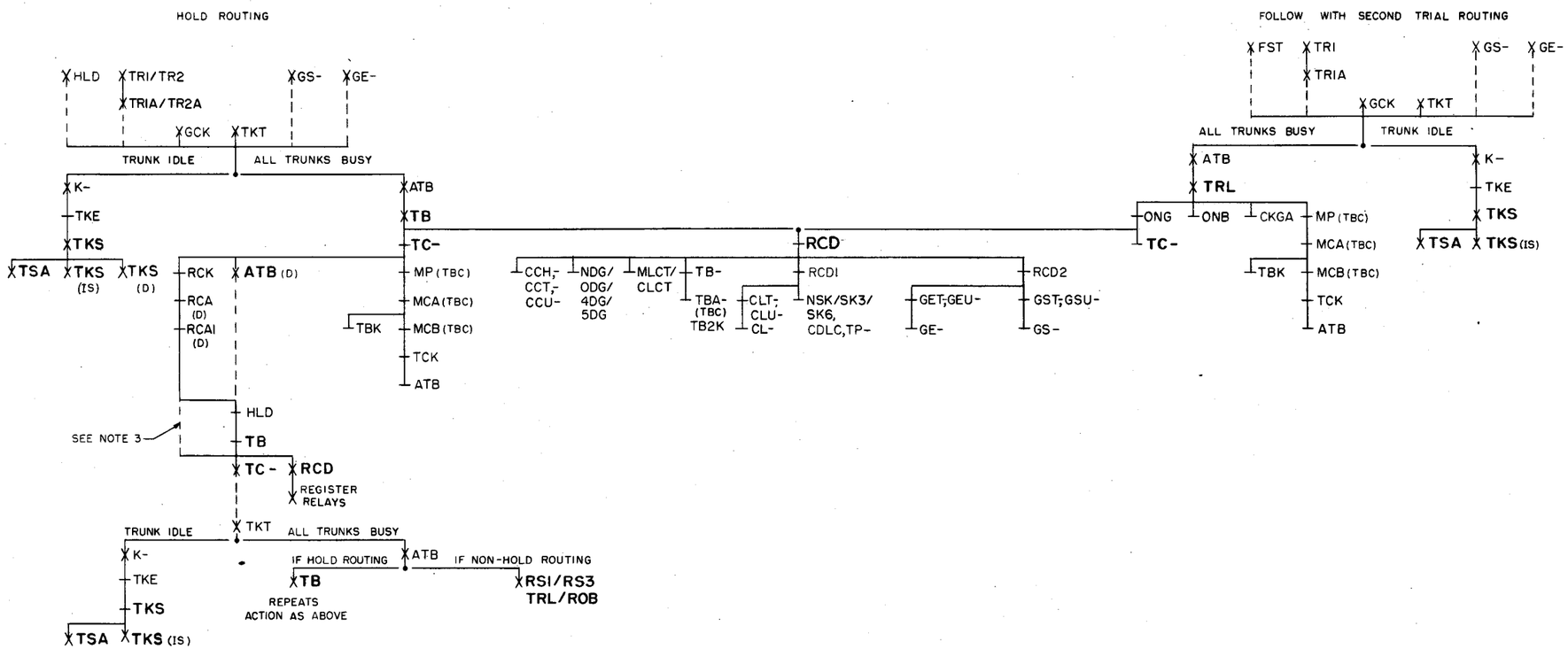

MARKER

ROUTE SWITCHING RELAY OPERATION

NO. 4A TOLL

3 SHEETS, SHEET 3

OS 202-1

MP-11691

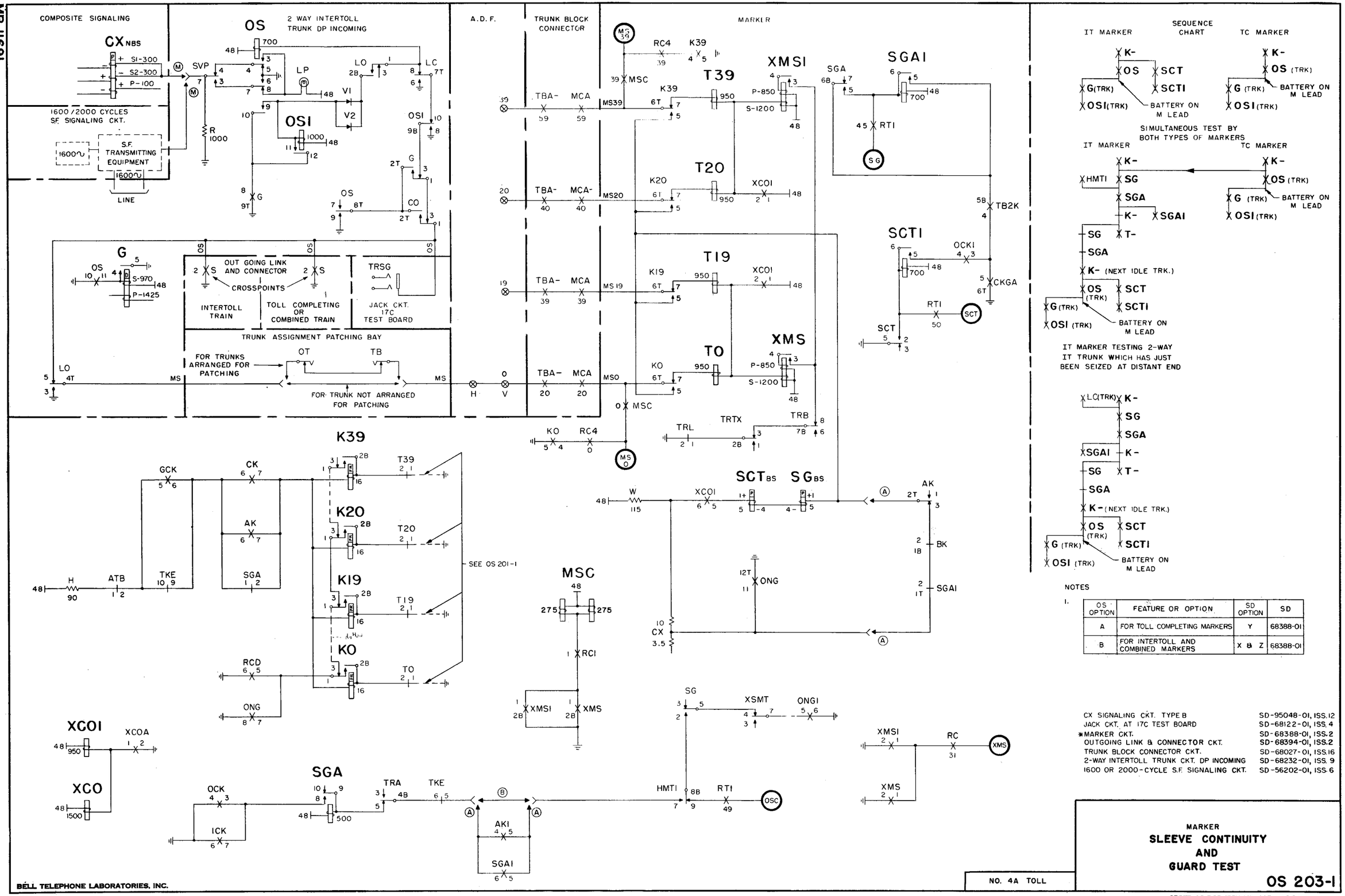

NOTES

1.

OS OPTION	FEATURE OR OPTION	SD OPTION	SD
A	FOR TOLL COMPLETING MARKERS	Y	68388-01
B	FOR INTERTOLL AND COMBINED MARKERS	X & Z	68388-01

CX SIGNALING CKT. TYPE B	SD-95048-01, ISS.12
JACK CKT. AT 17C TEST BOARD	SD-68122-01, ISS. 4
*MARKER CKT.	SD-68388-01, ISS.2
OUTGOING LINK & CONNECTOR CKT.	SD-68394-01, ISS.2
TRUNK BLOCK CONNECTOR CKT.	SD-68027-01, ISS.16
2-WAY INTERTOLL TRUNK CKT. DP INCOMING	SD-68232-01, ISS. 9
1600 OR 2000-CYCLE S.F. SIGNALING CKT.	SD-56202-01, ISS. 6

ISSUE		
DATE		
8-30-51	1	A.S.C. & B.B.

MARKER
SLEEVE CONTINUITY AND GUARD TEST

NO. 4A TOLL

OS 203-1

BELL TELEPHONE LABORATORIES, INC.
PRINTED IN U. S. A.
ORDER AS BSP ITEM MP-MP-11691

MP-11696

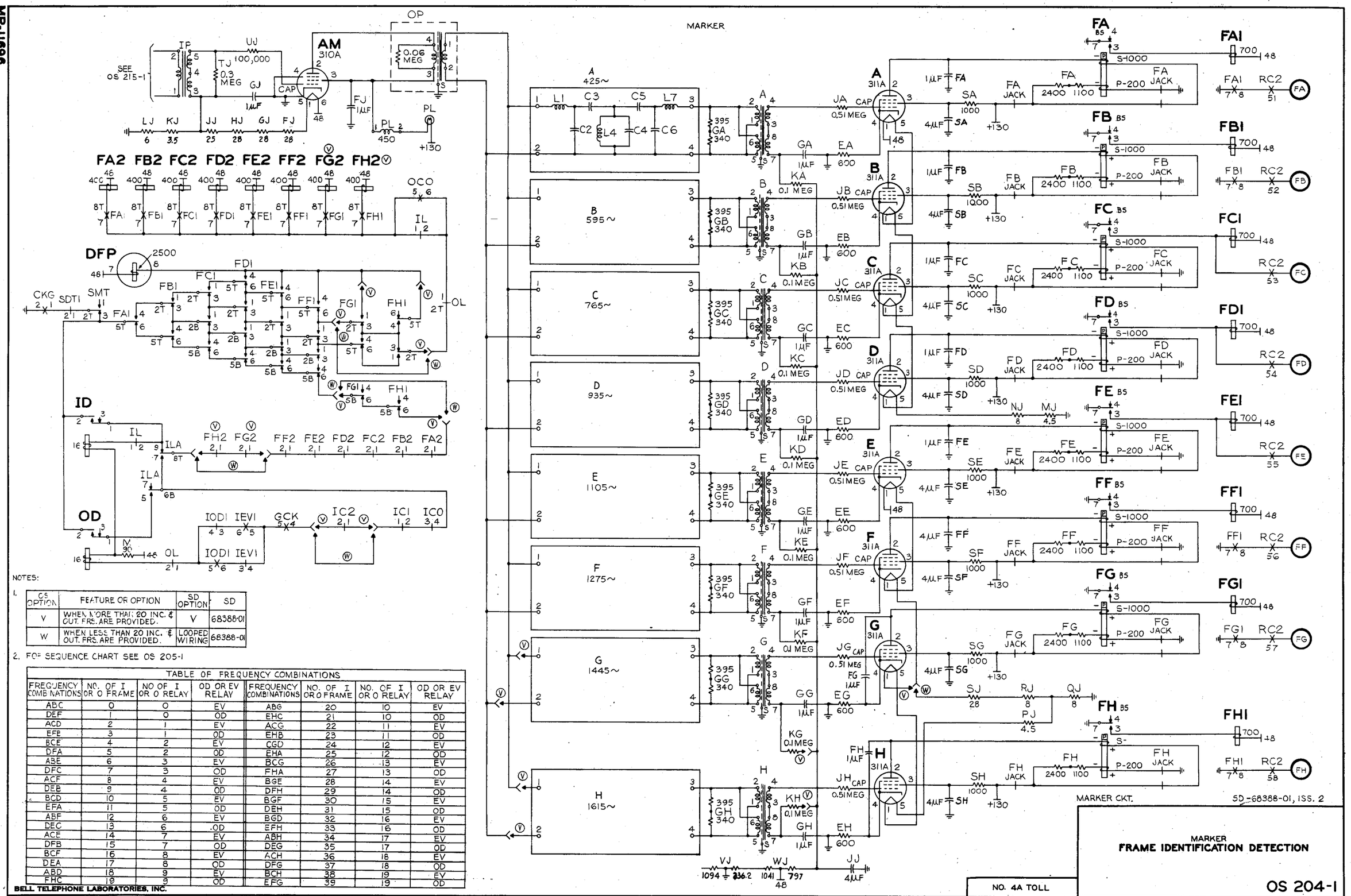

NOTES:

1.

CS OPTION	FEATURE OR OPTION	SD OPTION	SD
V	WHEN MORE THAN 20 INC. & OUT. FRS. ARE PROVIDED.	V	68388-01
W	WHEN LESS THAN 20 INC. & OUT. FRS. ARE PROVIDED.	LOOPED WIRING	68388-01

2. FOR SEQUENCE CHART SEE OS 205-1

TABLE OF FREQUENCY COMBINATIONS

FREQUENCY COMBINATIONS	NO. OF I OR O FRAME	NO OF I OR O RELAY	OD OR EV RELAY	FREQUENCY COMBINATIONS	NO. OF I OR O FRAME	NO. OF I OR O RELAY	OD OR EV RELAY
ABC	0	0	EV	ABG	20	10	EV
DEF	1	0	OD	EHC	21	10	OD
ACD	2	1	EV	ACG	22	11	EV
EFB	3	1	OD	EHB	23	11	OD
BCE	4	2	EV	CGD	24	12	EV
DFA	5	2	OD	EHA	25	12	OD
ABE	6	3	EV	BCG	26	13	EV
DFC	7	3	OD	FHA	27	13	OD
ACF	8	4	EV	BGE	28	14	EV
DEB	9	4	OD	DFH	29	14	OD
BCD	10	5	EV	BGF	30	15	EV
EFA	11	5	OD	DEH	31	15	OD
ABF	12	6	EV	BGD	32	16	EV
DEC	13	6	OD	EFH	33	16	OD
ACE	14	7	EV	ABH	34	17	EV
DFB	15	7	OD	DEG	35	17	OD
BCF	16	8	EV	ACH	36	18	EV
DEA	17	8	OD	DFG	37	18	OD
ABD	18	9	EV	BCH	38	19	EV
FHC	19	9	OD	EFG	39	19	OD

ISSUE	DATE
1	1-16-61
2	9-24-51

MARKER
FRAME IDENTIFICATION DETECTION

OS 204-1

BELL TELEPHONE LABORATORIES, INC.
PRINTED IN U. S. A.
ORDER AS BSP ITEM MP-11696

MP-11695

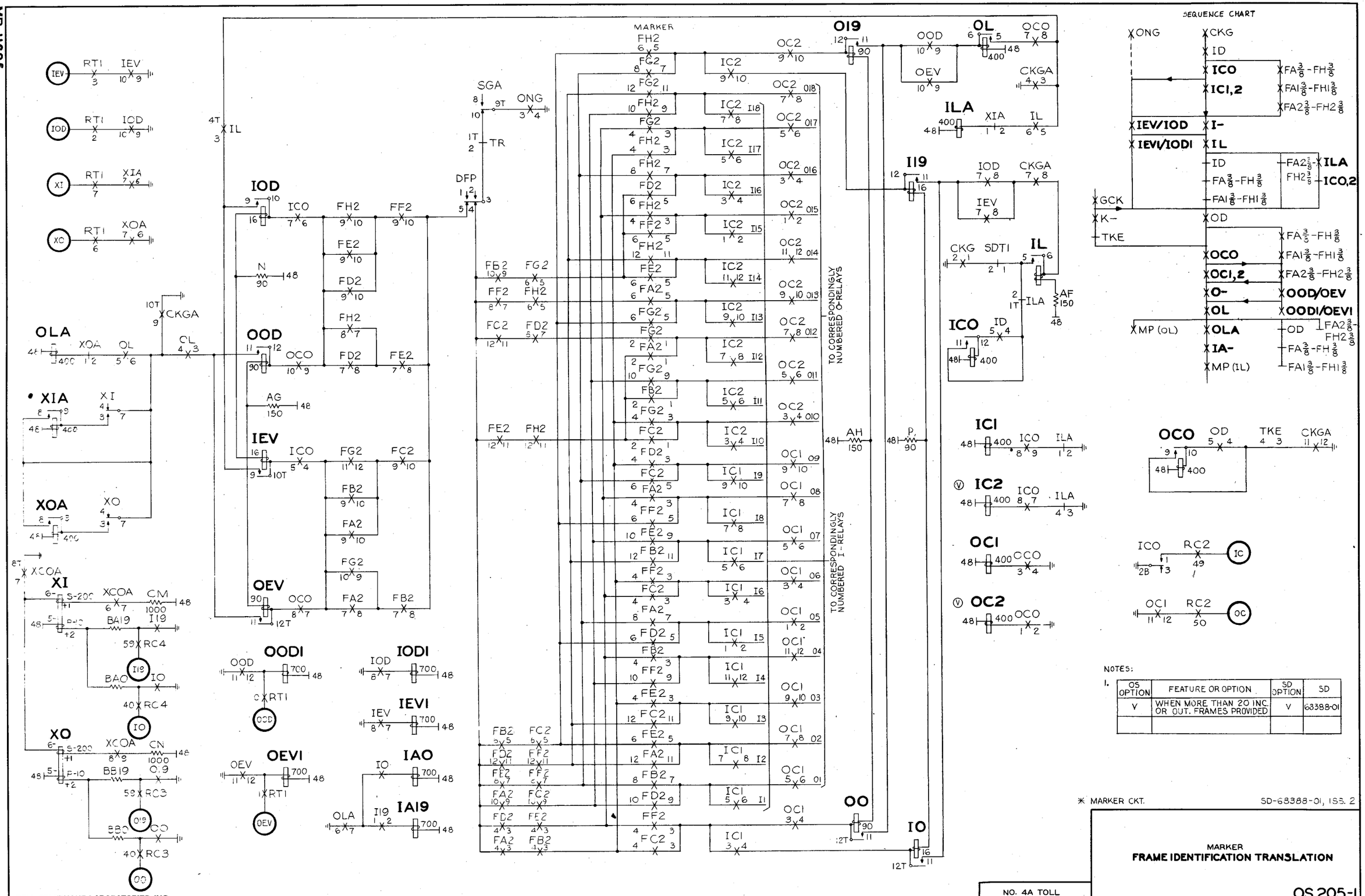

NOTES:

1.

OS OPTION	FEATURE OR OPTION	SD OPTION	SD
V	WHEN MORE THAN 20 INC. OR OUT. FRAMES PROVIDED	V	68388-01

✳ MARKER CKT.

SD-68388-01, ISS. 2

ISSUE	DATE
1	4-7-69

MARKER
FRAME IDENTIFICATION TRANSLATION

NO. 4A TOLL

OS 205-1

BELL TELEPHONE LABORATORIES, INC.
PRINTED IN U. S. A.
ORDER AS BSP ITEM MP-11695

SEQUENCE CHART

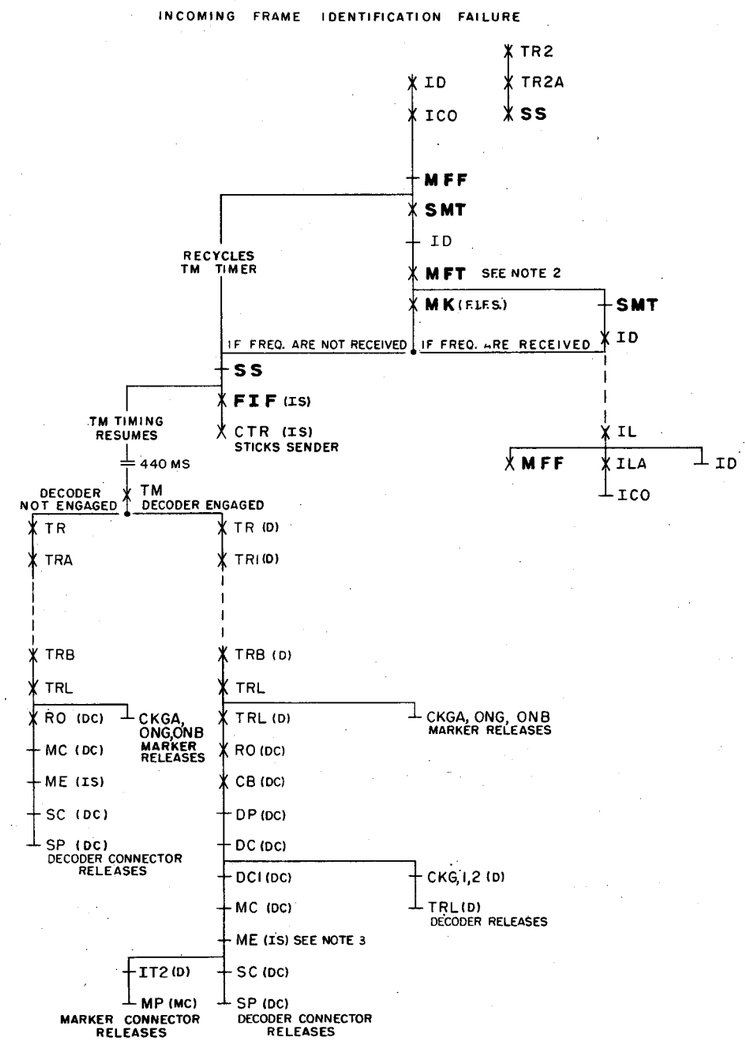

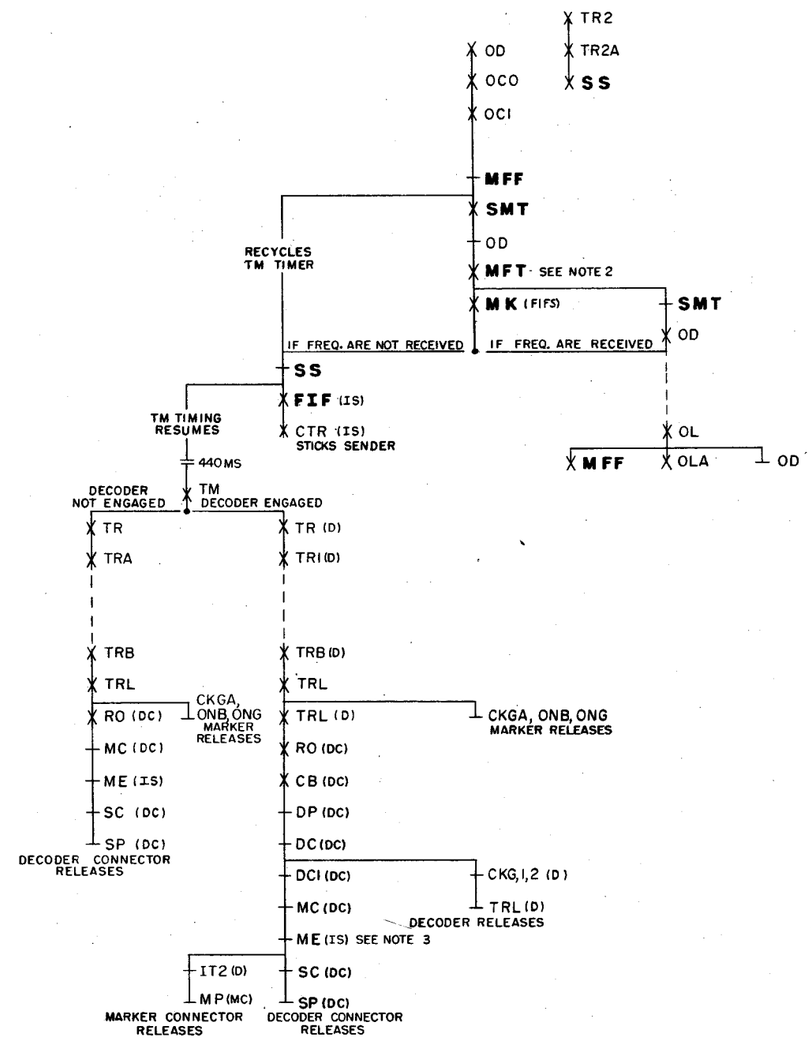

NOTES:

1.

OS OPTION	FEATURE OR OPTION	SD OPTION	SD
A	COMBINED MARKER	X	68388-01
B	TOLL COMPLETING MARKER	Y	68388-01
C	INTERTOLL MARKER	Z	68388-01

2. IF MFT FAILS TO OPERATE, IT INDICATES THE SEL. MAG. LEAD OPEN. THE TROUBLE CONDITION WILL BE TREATED THE SAME AS THE FREQ. SUPPLY FAILURE.

3. WITH THE ME RELAY NORMAL AND THE CTR RELAY OPERATED IN THE SENDER, THE INCOMING TRUNK WILL BE LEFT HIGH AND DRY, AND A STUCK SENDER WILL BE INDICATED.

MARKER
FRAME IDENTIFICATION FAILURE AND MULTIFREQUENCY THROWOVER

OS 206-1 2 SHEETS, SHEET 1

NO. 4A TOLL

ORDER AS BSP ITEM MP-11697

ISSUE	1	K.S.H. A.S.R.
DATE	9-24-51	

2 SHEETS, SHEET 1

MP-11697

BELL TELEPHONE LABORATORIES, INC.

PRINTED IN U. S. A.

MP-11697

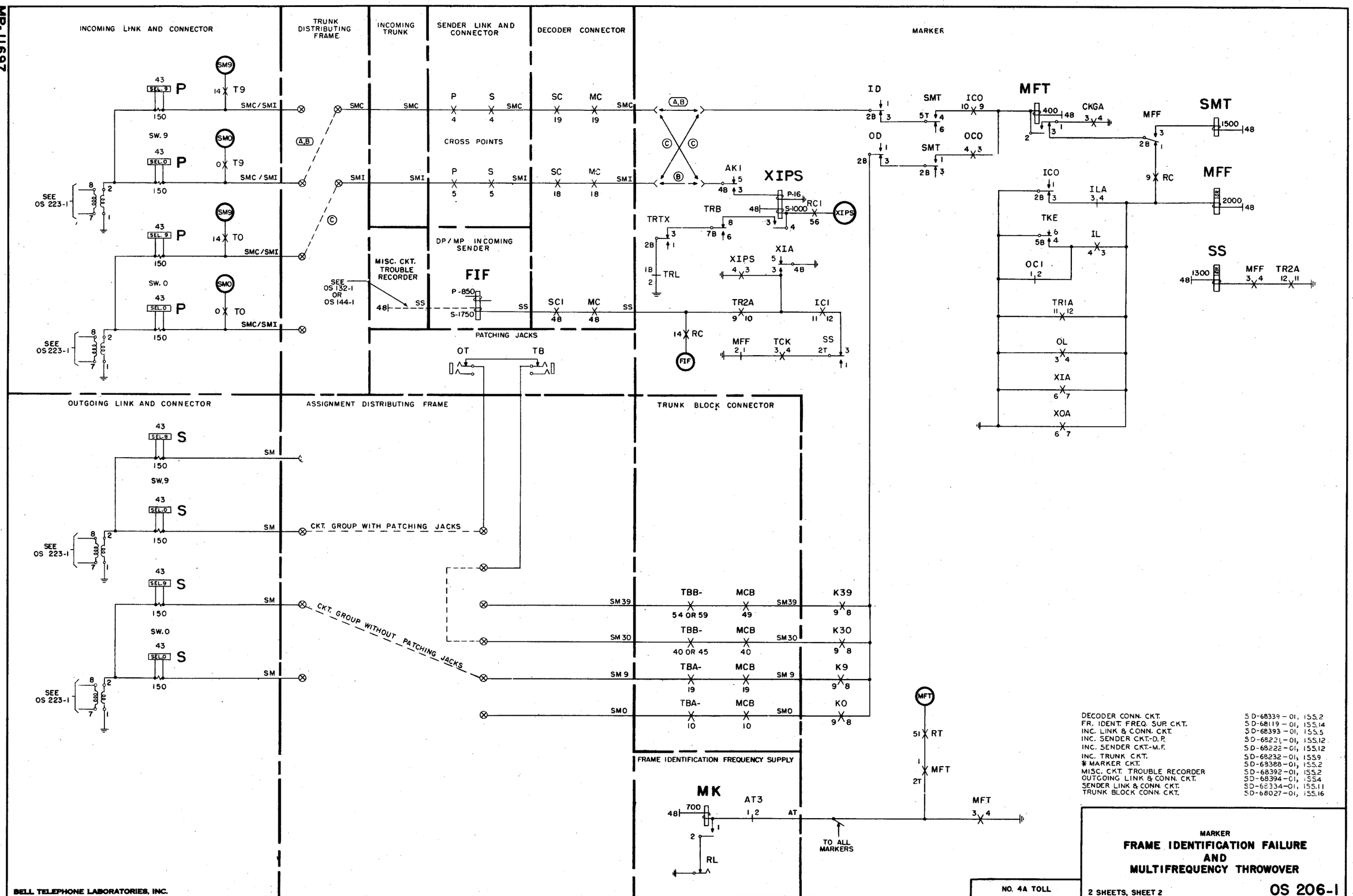

ISSUE	DATE
1	6-24-51

BELL TELEPHONE LABORATORIES, INC.

PRINTED IN U. S. A.

ORDER AS BSP ITEM MP-11697

NOTES:

1.

OS OPTION	FEATURE OR OPTION	SD OPTION	SD
A	OUTGOING PRIMARY EXTENSION FRAMES NOT PROVIDED.	Q	68394-01
B	OUTGOING PRIMARY EXTENSION FRAMES PROVIDED.	FIG. 18	68394-01

2. SEQUENCE CHART OPERATION SHOWS TWO MARKERS TRYING TO GAIN ACCESS TO THE SAME FRAME.

3. THIS DRAWING ASSUMES THE USE OF "F" AND "J" OPTIONS AND FIGS. B AND 18.

SEQUENCE CHART

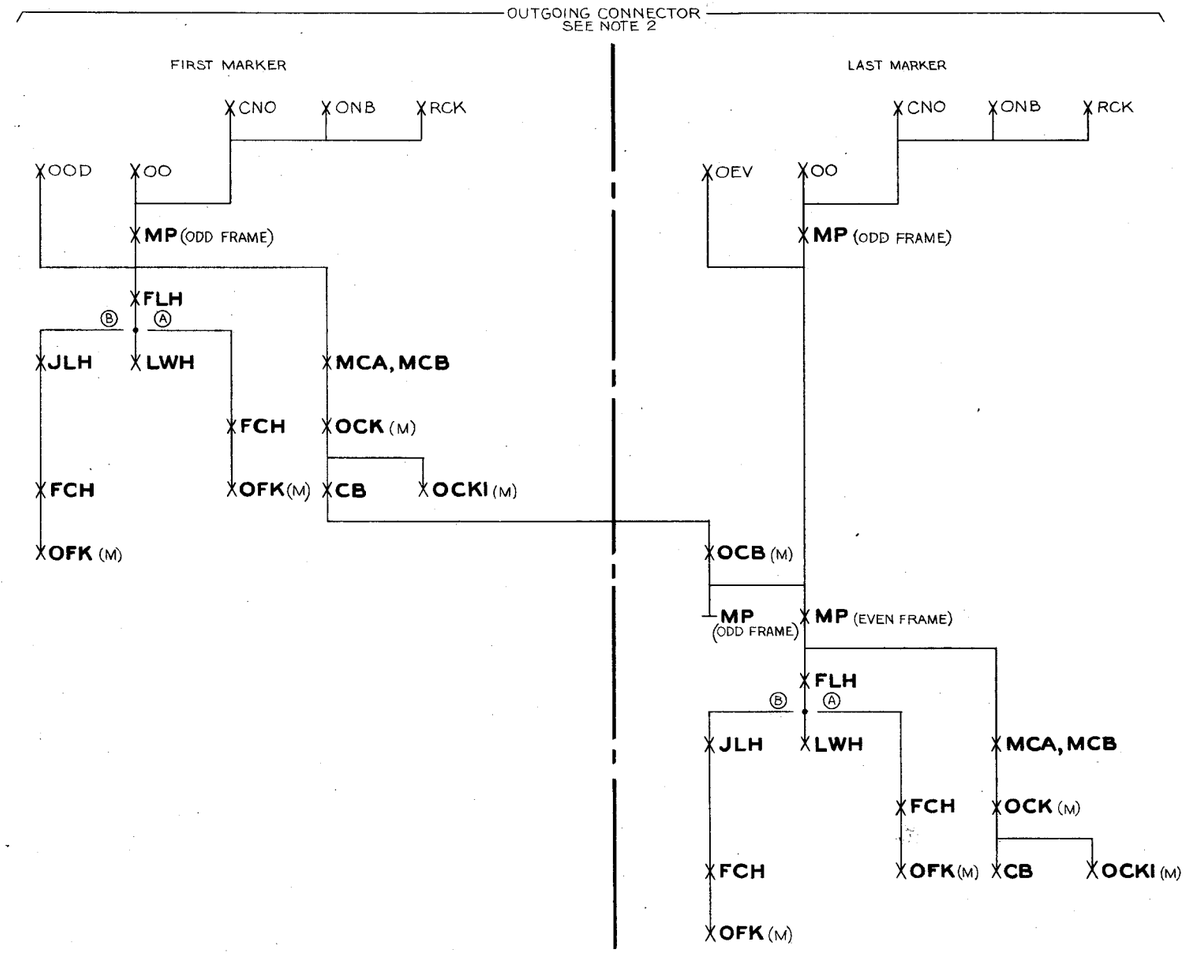

FIG. A
TO LIKE NUMBERED OUTGOING FRAMES

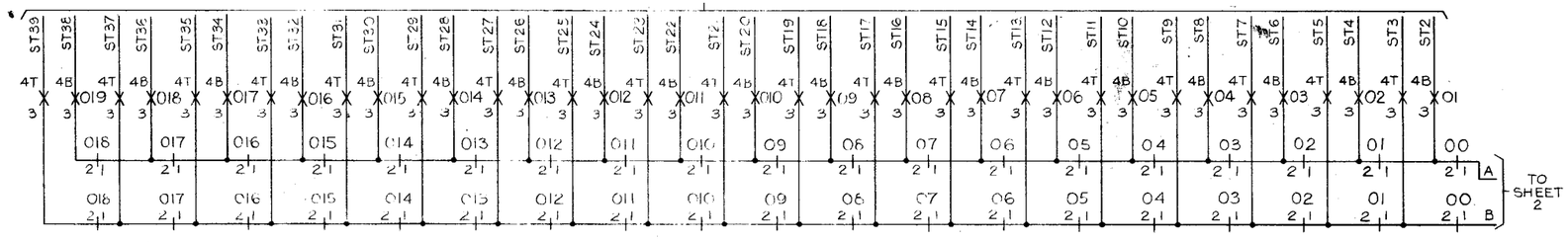

MARKER CKT.	SD-68388-01, ISS.2
MISC. CKT. TROUBLE RECORDER	SD-68392-01, ISS.3
* OUTGOING LINK AND CONNECTOR CKT.	SD-68394-01, ISS.4
TROUBLE RECORDER CKT.	SD-68389-01, ISS.2

MARKER
OUTGOING FRAME SEIZURE
HOME AND MATE OPERATION

OS 207-1

2 SHEETS, SHEET 1

NO. 4A TOLL

ORDER AS BSP ITEM MP-11702

ISSUE	1	A.S.P. R.R.R.
DATE	10-1-51	

2 SHEETS, SHEET 1

MP-11702

BELL TELEPHONE LABORATORIES, INC.

PRINTED IN U. S. A.

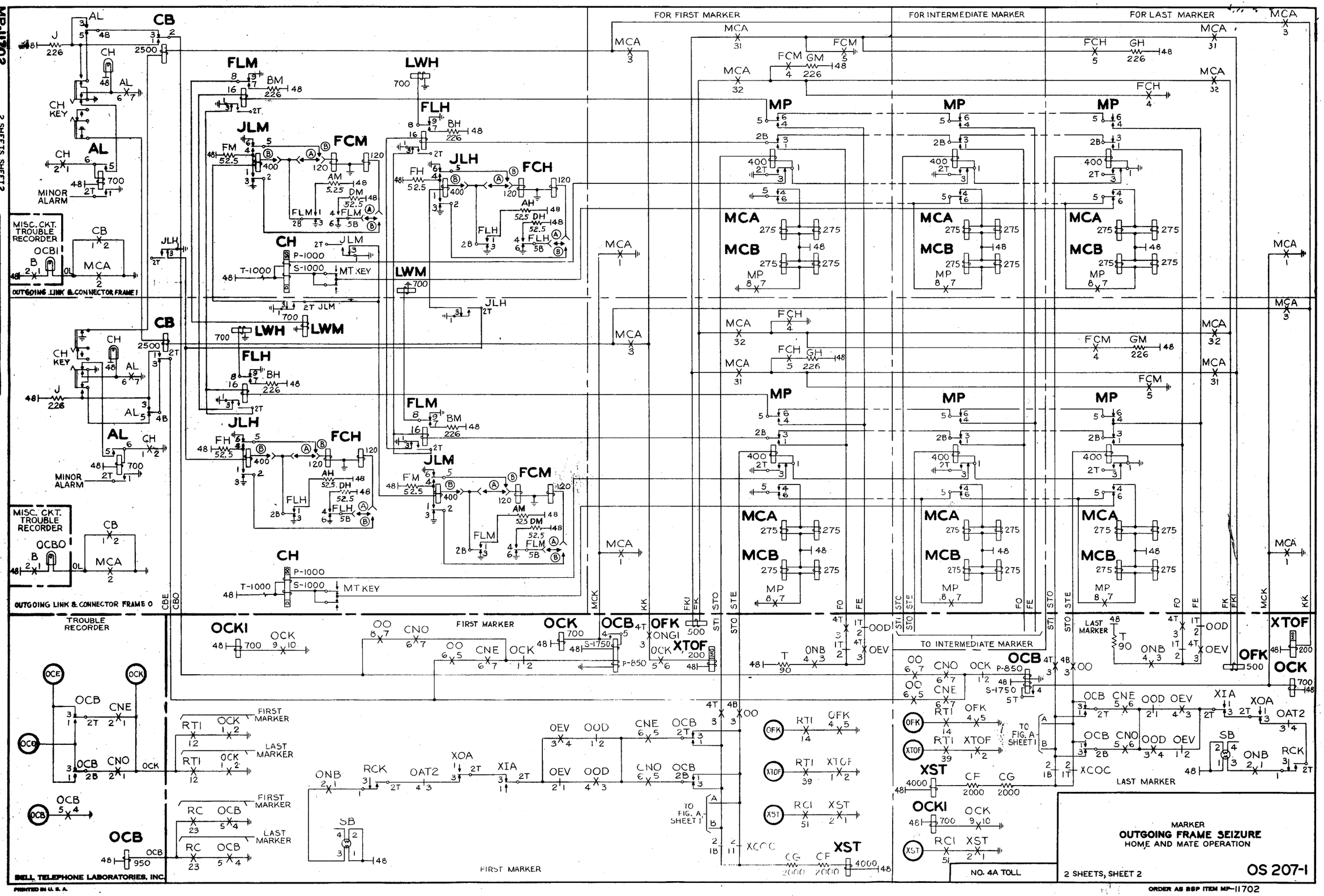
MP-11702
2 SHEETS, SHEET 2
FOR FIRST MARKER
FOR INTERMEDIATE MARKER
FOR LAST MARKER
OUTGOING LINK & CONNECTOR FRAME I
OUTGOING LINK & CONNECTOR FRAME O
MISC. CKT. TROUBLE RECORDER
MINOR ALARM
TROUBLE RECORDER
FIRST MARKER
LAST MARKER
TO INTERMEDIATE MARKER
TO FIG. A SHEET I
MARKER
OUTGOING FRAME SEIZURE
HOME AND MATE OPERATION
NO. 4A TOLL
2 SHEETS, SHEET 2
OS 207-1
BELL TELEPHONE LABORATORIES, INC.
PRINTED IN U. S. A.
ORDER AS BSP ITEM MP-11702

NOTES:

1.

OS OPTION	FEATURE OR OPTION	SD OPTION	SD
A	OUTGOING PRIMARY EXTENSION FRAMES NOT PROVIDED	FIG. B	68394-01
B	OUTGOING PRIMARY EXTENSION FRAMES PROVIDED.	FIG. 1B	68394-01

2. SEQUENCE CHART OPERATION SHOWS TWO MARKERS TRYING TO GAIN ACCESS TO THE SAME FRAME

3. THIS DRAWING ASSUMES THE USE OF N, J, & M OPTIONS.

SEQUENCE CHART

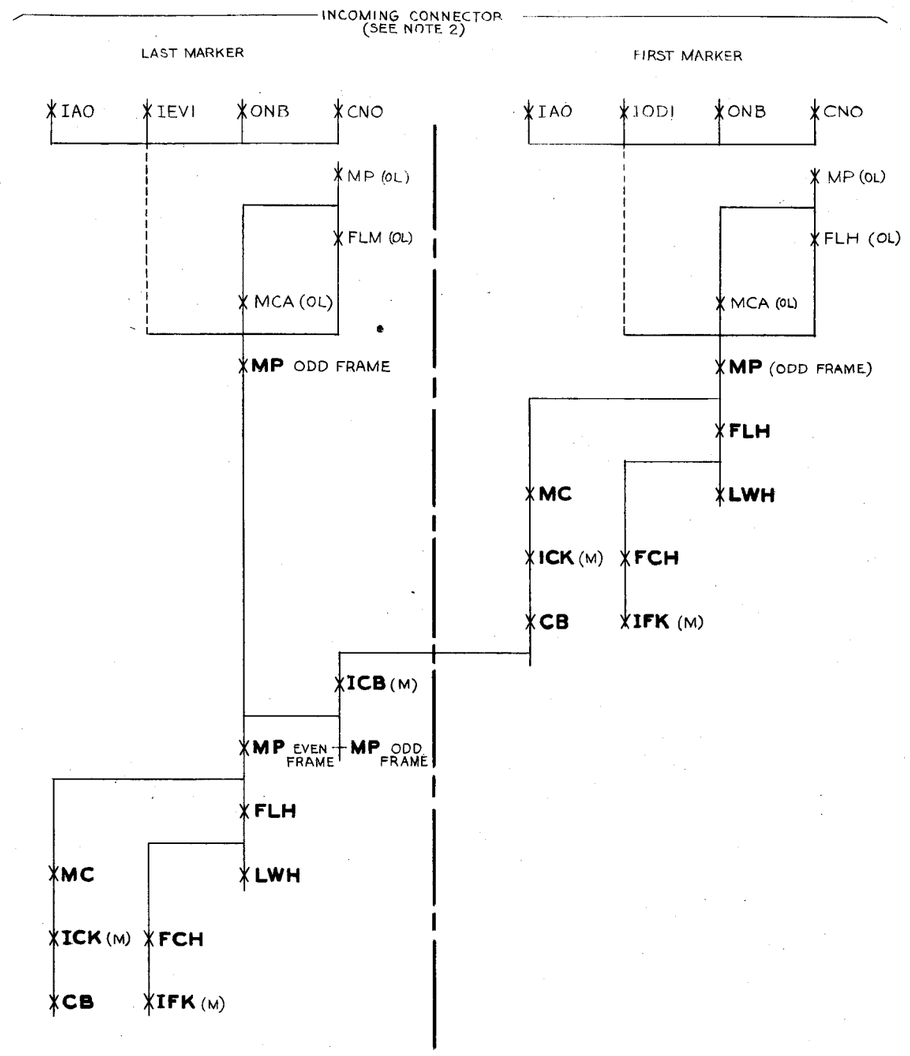

INCOMING LINK AND CONNECTOR CKT.	SD-68393-01, ISS. 5
MARKER CKT.	SD-68388-01, ISS. 2
MISCELLANEOUS CKT. TROUBLE RECORDER	SD-68392-01, ISS. 3
OUTGOING LINK AND CONNECTOR CKT.	SD-68394-01, ISS. 4
TROUBLE RECORDER CKT.	SD-68389-01, ISS. 2

MARKER
INCOMING FRAME SEIZURE
HOME AND MATE OPERATION

OS 208-1

2 SHEETS, SHEET 1

NO. 4A TOLL

ORDER AS BSP ITEM MP-11703

ISSUE	1	A.E.M. R.B.B.
DATE		10-1-51

2 SHEETS, SHEET 1

MP-11703

BELL TELEPHONE LABORATORIES, INC.

PRINTED IN U. S. A.

MP-11703

2 SHEETS, SHEET 2

ISSUE	DATE
1 & 2 & 3	10-1-51

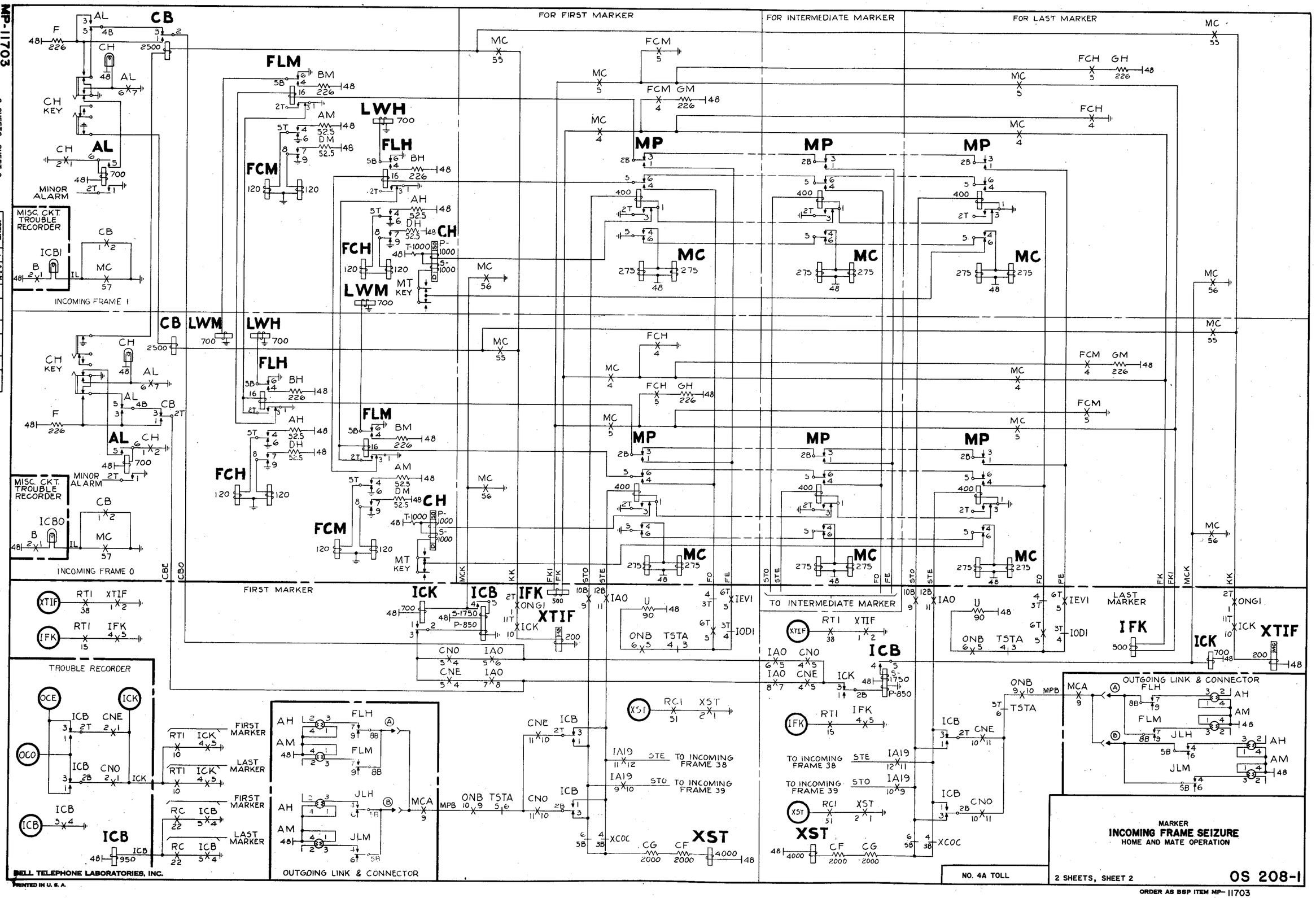

MARKER
INCOMING FRAME SEIZURE
HOME AND MATE OPERATION

NO. 4A TOLL

2 SHEETS, SHEET 2

OS 208-1

BELL TELEPHONE LABORATORIES, INC.
PRINTED IN U. S. A.

ORDER AS BSP ITEM MP-11703

MP-11704

ISSUE	DATE
1	5-24-51

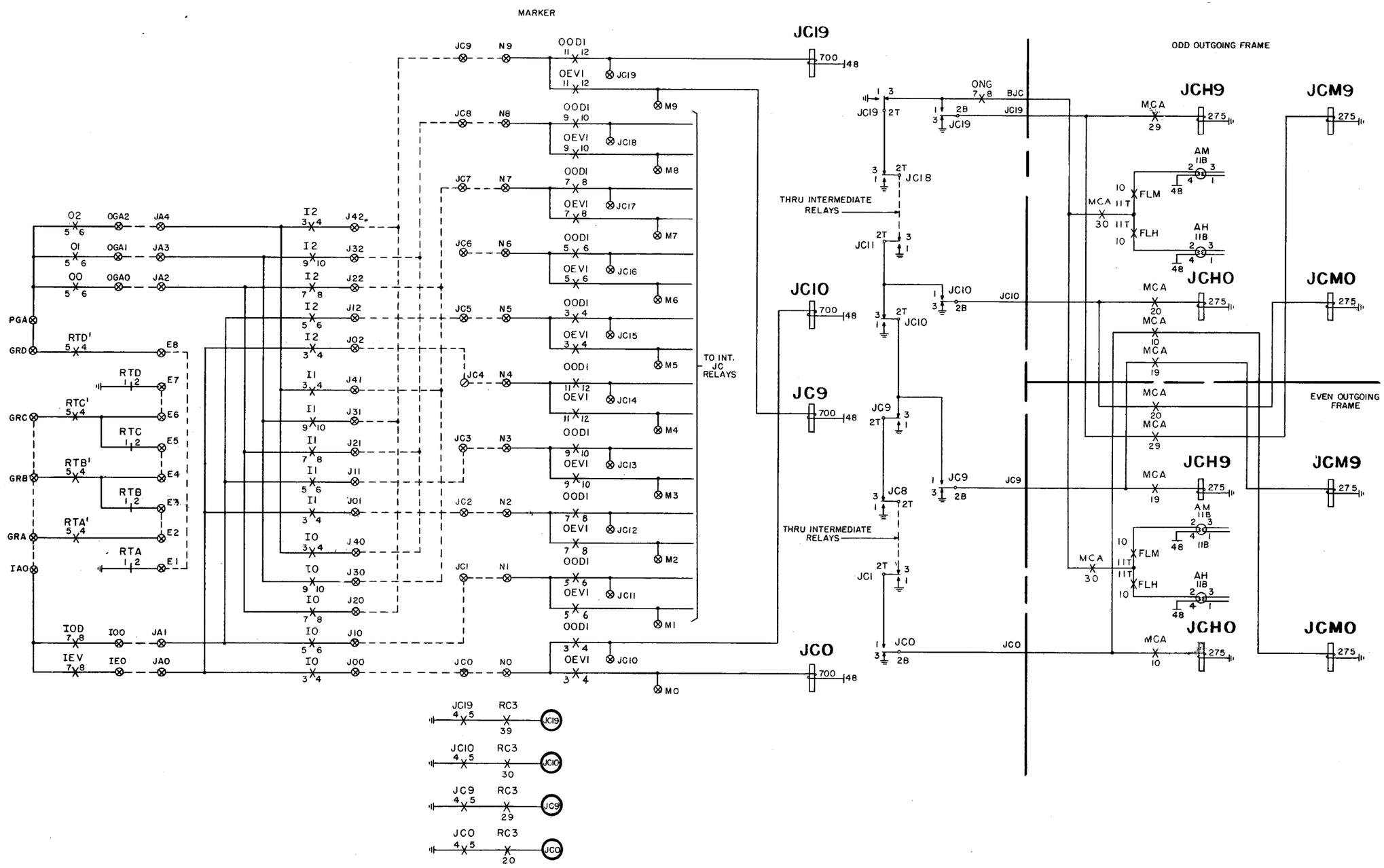

MARKER CKT. SD-68388-01, ISS. 2
OUTGOING LINK & CONNECTOR CKT. SD-68394-01, ISS. 4

MARKER
JUNCTOR GROUP CUT-IN
PLAN TA-6 INCOMING & 6 OUTGOING FRAMES

NO.4A TOLL

OS 209-1

BELL TELEPHONE LABORATORIES, INC.
PRINTED IN U. S. A.
ORDER AS BSP ITEM MP-11704

MP-11705

ISSUE	1	4	5
DATE	7-14-51	8-8-56	8-8-56

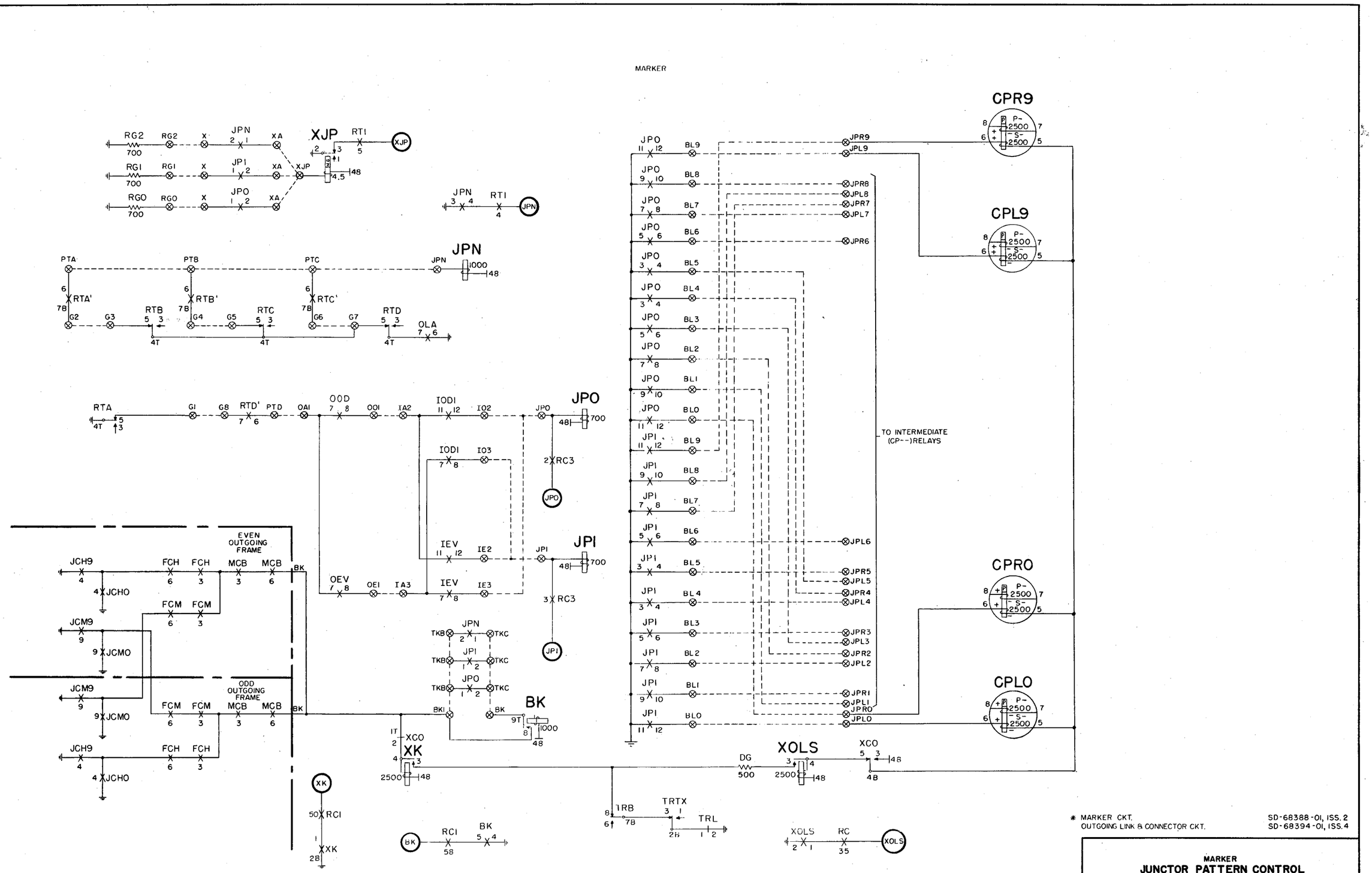

MP-11706

ISSUE	1	2	3	4
DATE	6-20-51			

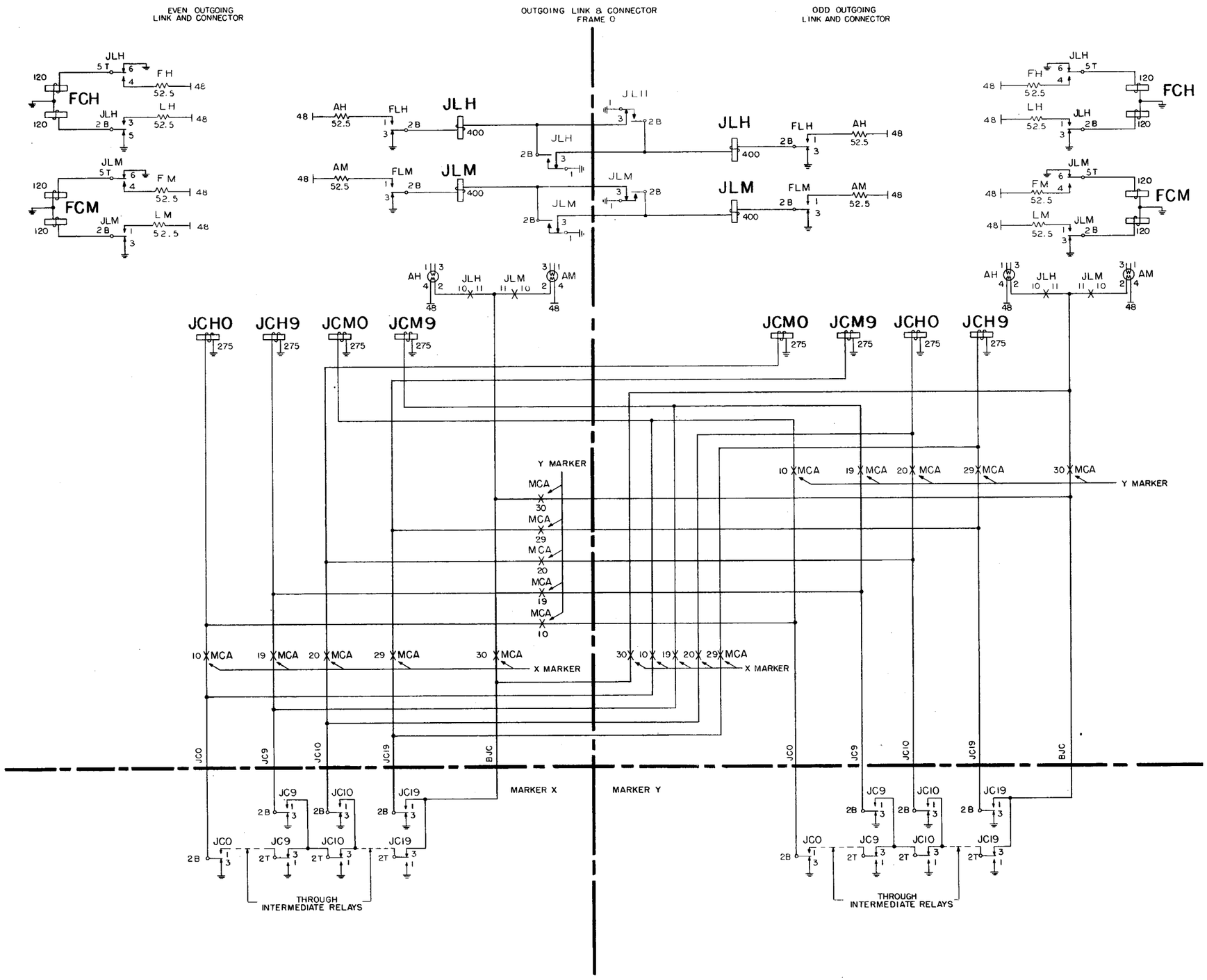

NOTES:
1. WHEN PRIMARY EXTENSIONS ARE PROVIDED, THE JCHO-9 AND JCMO-9 RELAYS ON THE ODD NUMBERED OUTGOING FRAMES ARE NUMBERED JCH 10-19 AND JCM 10-19.

* MARKER CKT. SD-68388-01, ISS. 2
OUTGOING LINK AND CONNECTOR CKT. SD-68394-01, ISS. 4

MARKER

JUNCTOR LOCKOUT FOR PAIRED OUTGOING FRAMES

NO. 4A TOLL

OS 211-1

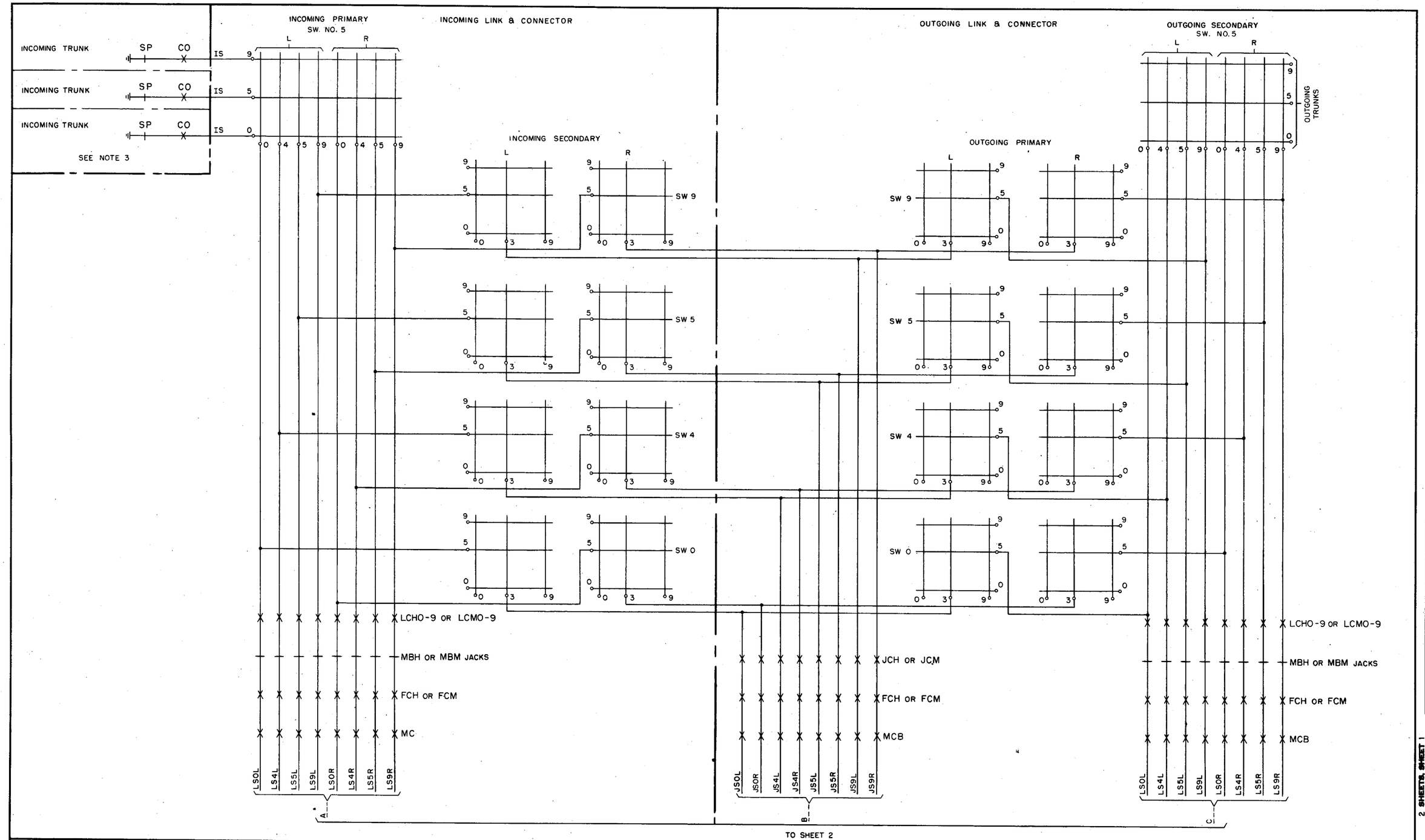

MARKER

CHANNEL SELECTION

OS 212-1

2 SHEETS, SHEET 1

NO. 4A TOLL

ORDER AS BSP ITEM MP-11698

ISSUE	1	A.S.H. R.B.B.
DATE	9-21-51	

2 SHEETS, SHEET 1

MP-11698

BELL TELEPHONE LABORATORIES, INC.

PRINTED IN U. S. A.

MP-11698

2 SHEETS, SHEET 2

ISSUE	DATE
1	4-28-54
6	11-12-56

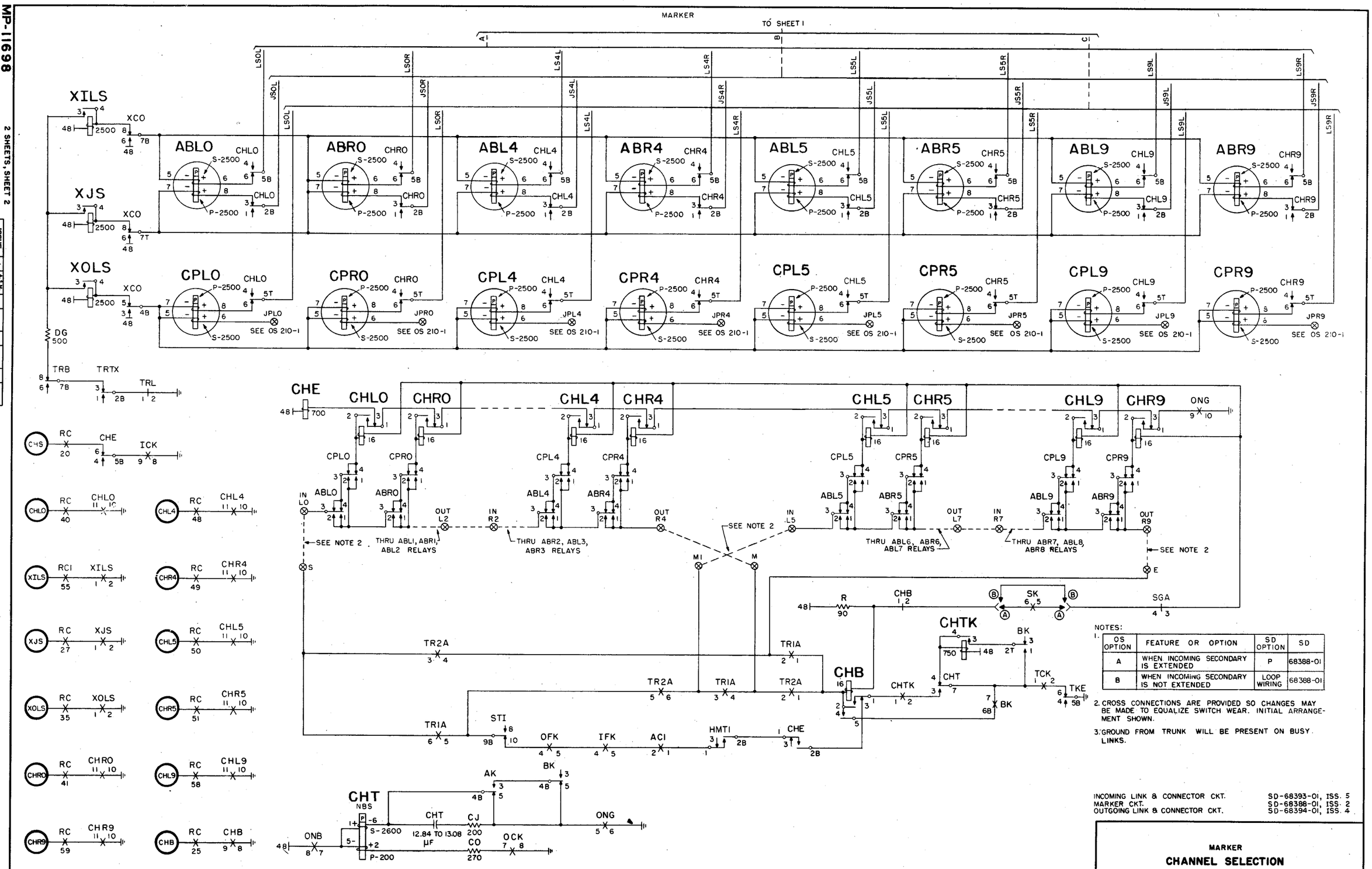

NOTES:

1.

OS OPTION	FEATURE OR OPTION	SD OPTION	SD
A	WHEN INCOMING SECONDARY IS EXTENDED	P	68388-01
B	WHEN INCOMING SECONDARY IS NOT EXTENDED	LOOP WIRING	68388-01

2. CROSS CONNECTIONS ARE PROVIDED SO CHANGES MAY BE MADE TO EQUALIZE SWITCH WEAR. INITIAL ARRANGEMENT SHOWN.

3. GROUND FROM TRUNK WILL BE PRESENT ON BUSY LINKS.

INCOMING LINK & CONNECTOR CKT.	SD-68393-01, ISS. 5
MARKER CKT.	SD-68388-01, ISS. 2
OUTGOING LINK & CONNECTOR CKT.	SD-68394-01, ISS. 4

MARKER

CHANNEL SELECTION

NO. 4A TOLL

2 SHEETS, SHEET 2

OS 212-1

BELL TELEPHONE LABORATORIES, INC.

PRINTED IN U. S. A.

ORDER AS BSP ITEM MP-11698

MP-11699

ISSUE	1	2
DATE	5-14-51	

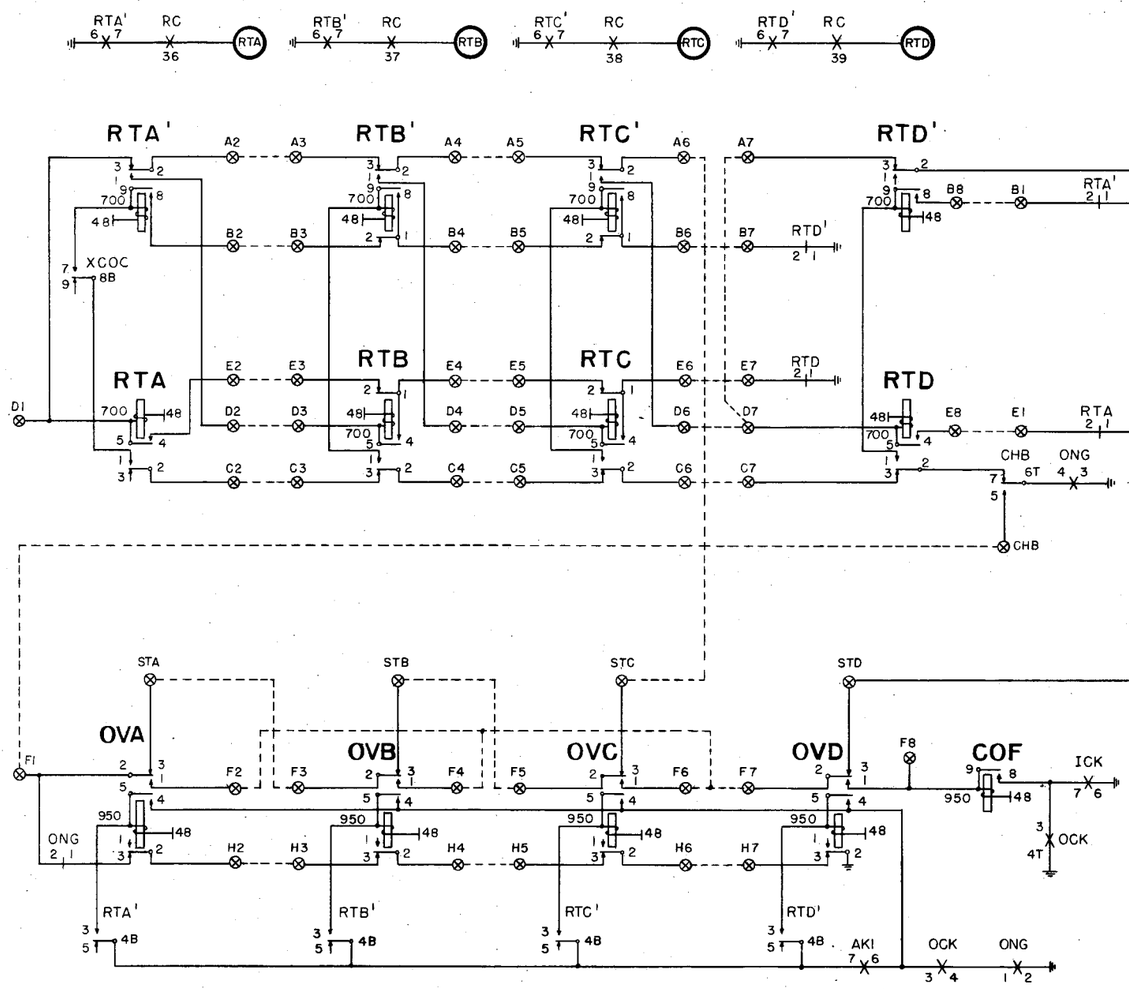

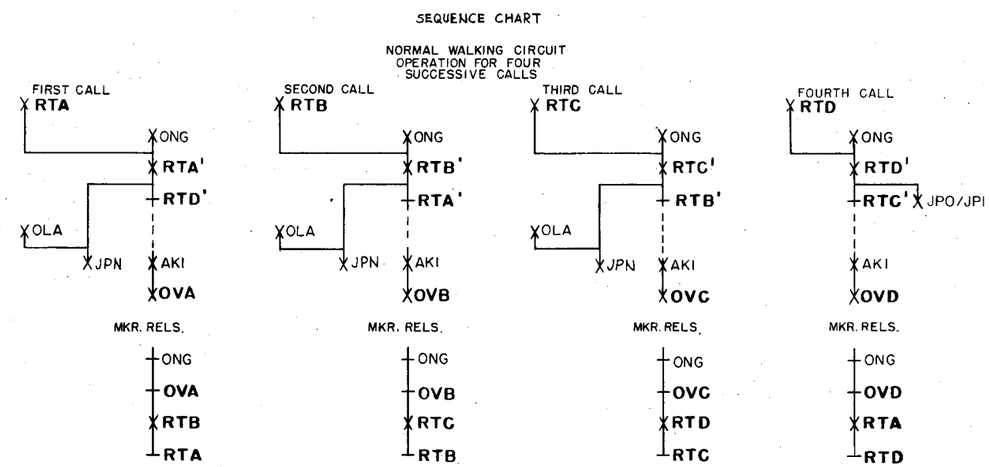

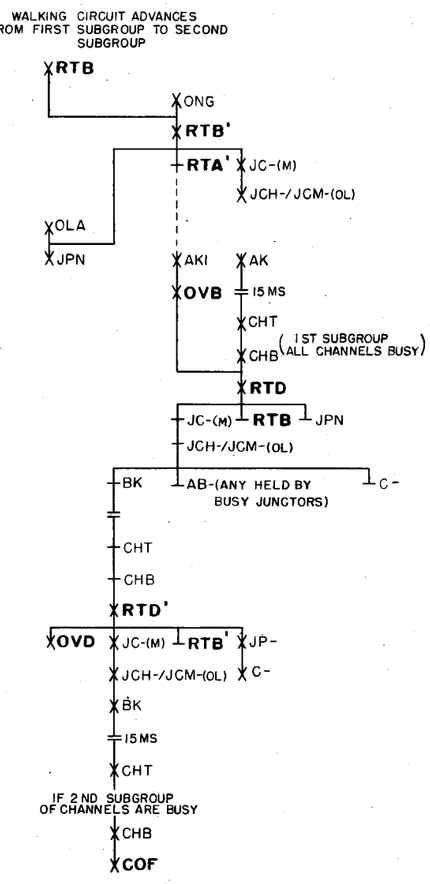

MARKER CKT.

SD-68388-01, ISS. 2

MARKER
CHANNELS BUSY JUNCTOR WALKING CIRCUIT 6 INCOMING AND 6 OUTGOING FRAMES

NO. 4A TOLL

OS 213-1

BELL TELEPHONE LABORATORIES, INC.
PRINTED IN U. S. A.

ORDER AS BSP ITEM MP-11699

MP-11707

ISSUE	DATE
1	9-17-51

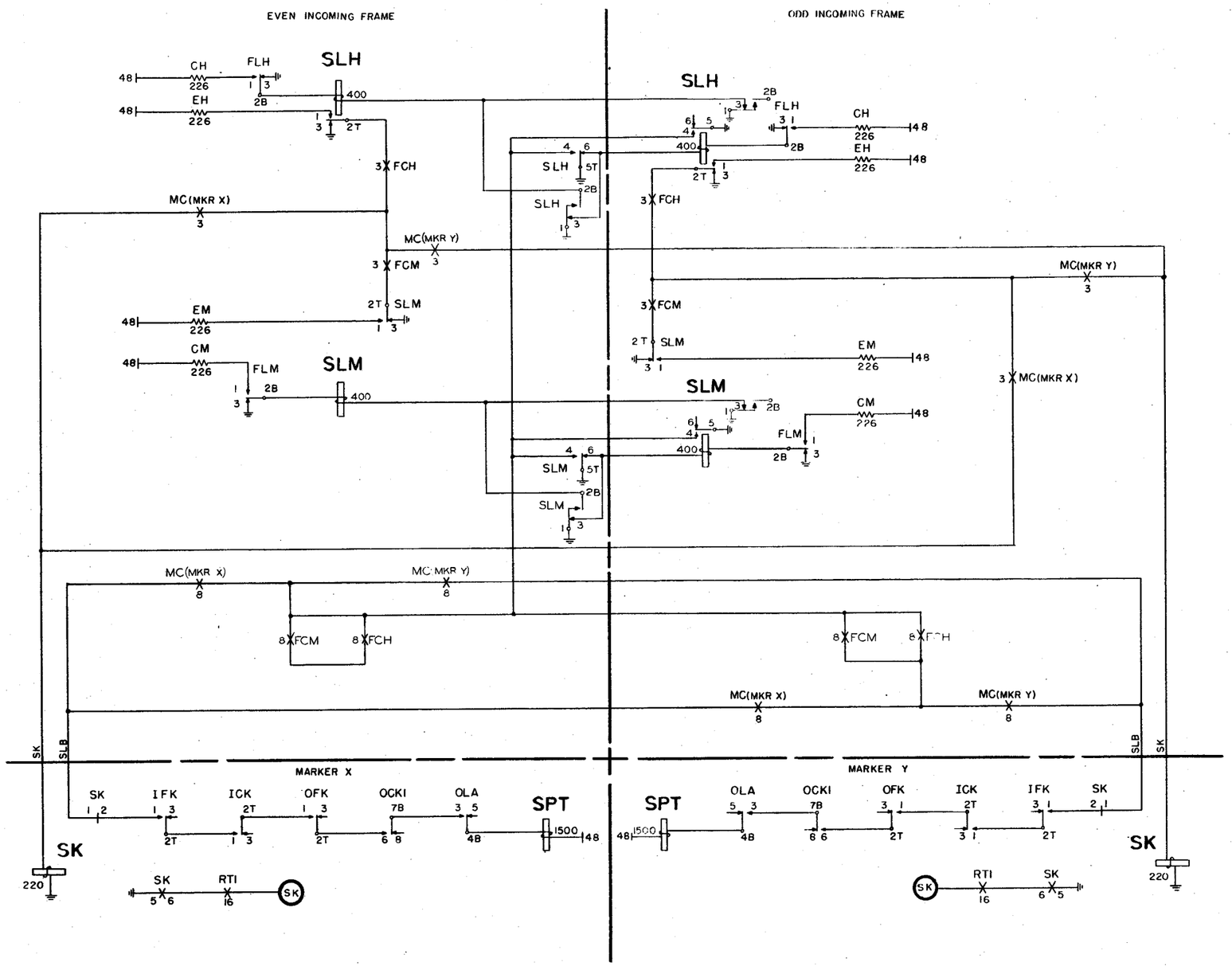

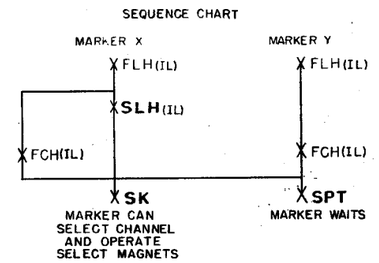

INCOMING LINK AND CONN. CKT. SD-68393-01, ISS. 5
* MARKER CKT. SD-68388-01, ISS. 2

MARKER
SELECT MAGNET LOCKOUT
PAIRED INCOMING FRAMES

NO. 4A TOLL

OS 214-1

BELL TELEPHONE LABORATORIES, INC.

PRINTED IN U.S.A.

ORDER AS BSP ITEM MP-11707

MP-11708

NOTES:

1.

OS OPTION	FEATURE OR OPTION	SD OPTION	SD
A	INC. SUPP. PRI. EXT. PROVIDED	FIG. 1	68393-01
D	OG. SUPP. SEC. EXT. PROVIDED	FIG. 4	68394-01
K	OG. PRI. EXT. NOT PROVIDED	K	68388-01
M	INC. SEC. EXT. PROVIDED	FIG. 4	68393-01
		M	68388-01
N	INC. SEC. EXT. NOT PROVIDED	N	68388-01
Q	OG. PRI. EXT. PROVIDED	FIG. 1	68394-01
		Q	68388-01
V	EVEN NUMBERED FRAMES	X	68393-01
		V	68394-01
W	ODD NUMBERED FRAMES	W	68393-01
			68394-01
X	COMBINED MARKERS	X	68388-01
Y	TOLL COMPLETION MARKERS	Y	68388-01
Z	INTERTOLL MARKERS	Z	68388-01

2. FOR SEQUENCE CHART SEE SC122-1

3. THIS DRAWING ASSUMES THE USE OF J, Q, N, M, E, R IN SD-68393-01 ISS. 5 AND F, M, J AND FIG. B IN SD-68394-01 ISS. 4.

ISSUE	1	2	3	4
DATE	07-1-71			

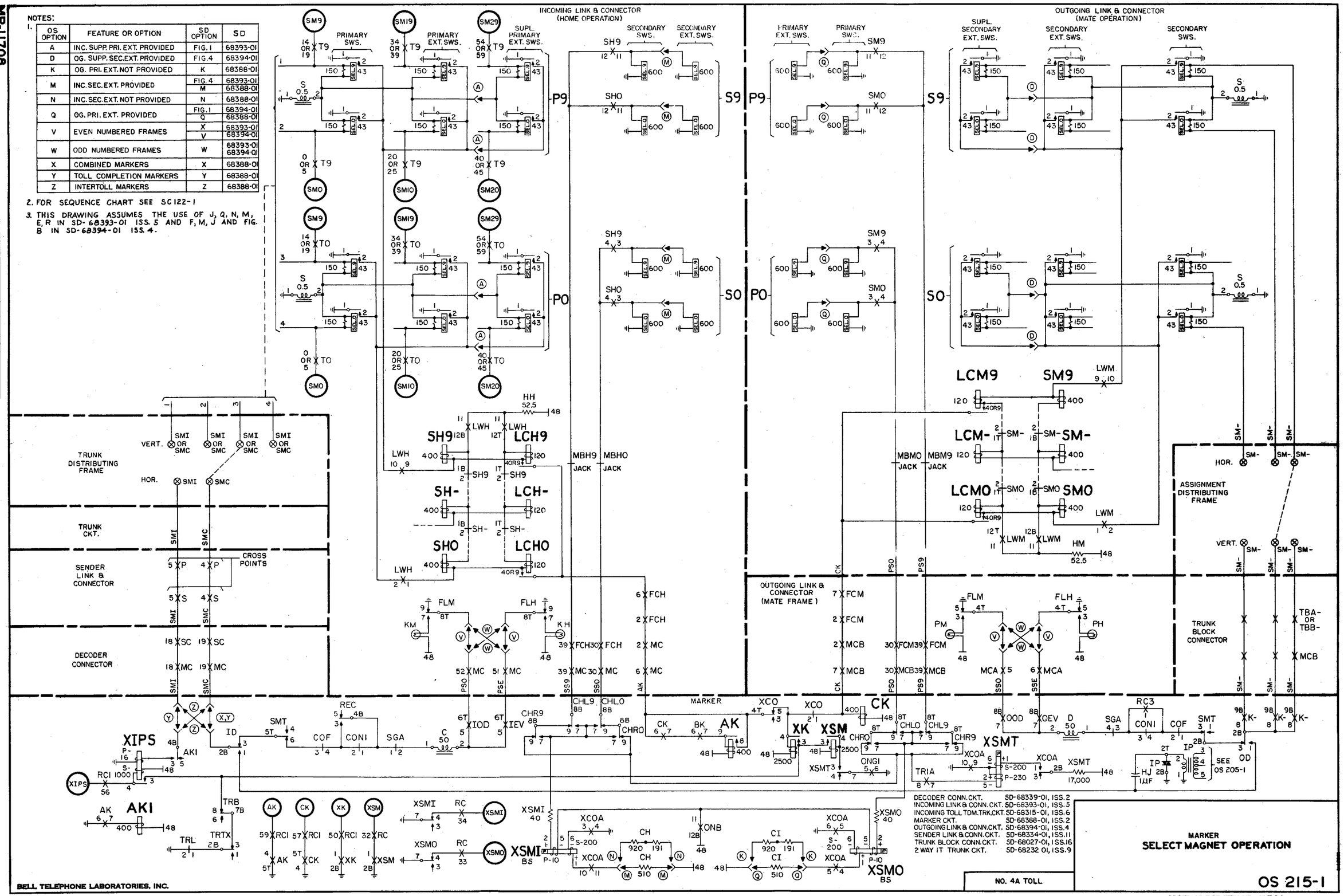

DECODER CONN. CKT.	SD-68339-01, ISS. 2
INCOMING LINK & CONN. CKT.	SD-68393-01, ISS. 5
INCOMING TOLL TDM. TRK. CKT.	SD-68315-01, ISS. 6
MARKER CKT.	SD-68388-01, ISS. 2
OUTGOING LINK & CONN. CKT.	SD-68394-01, ISS. 4
SENDER LINK & CONN. CKT.	SD-68334-01, ISS. 11
TRUNK BLOCK CONN. CKT.	SD-68027-01, ISS. 16
2 WAY IT TRUNK CKT.	SD-68232 01, ISS. 9

MARKER
SELECT MAGNET OPERATION

NO. 4A TOLL

OS 215-1

BELL TELEPHONE LABORATORIES, INC.

PRINTED IN U. S. A.

ORDER AS BSP ITEM MP-11708

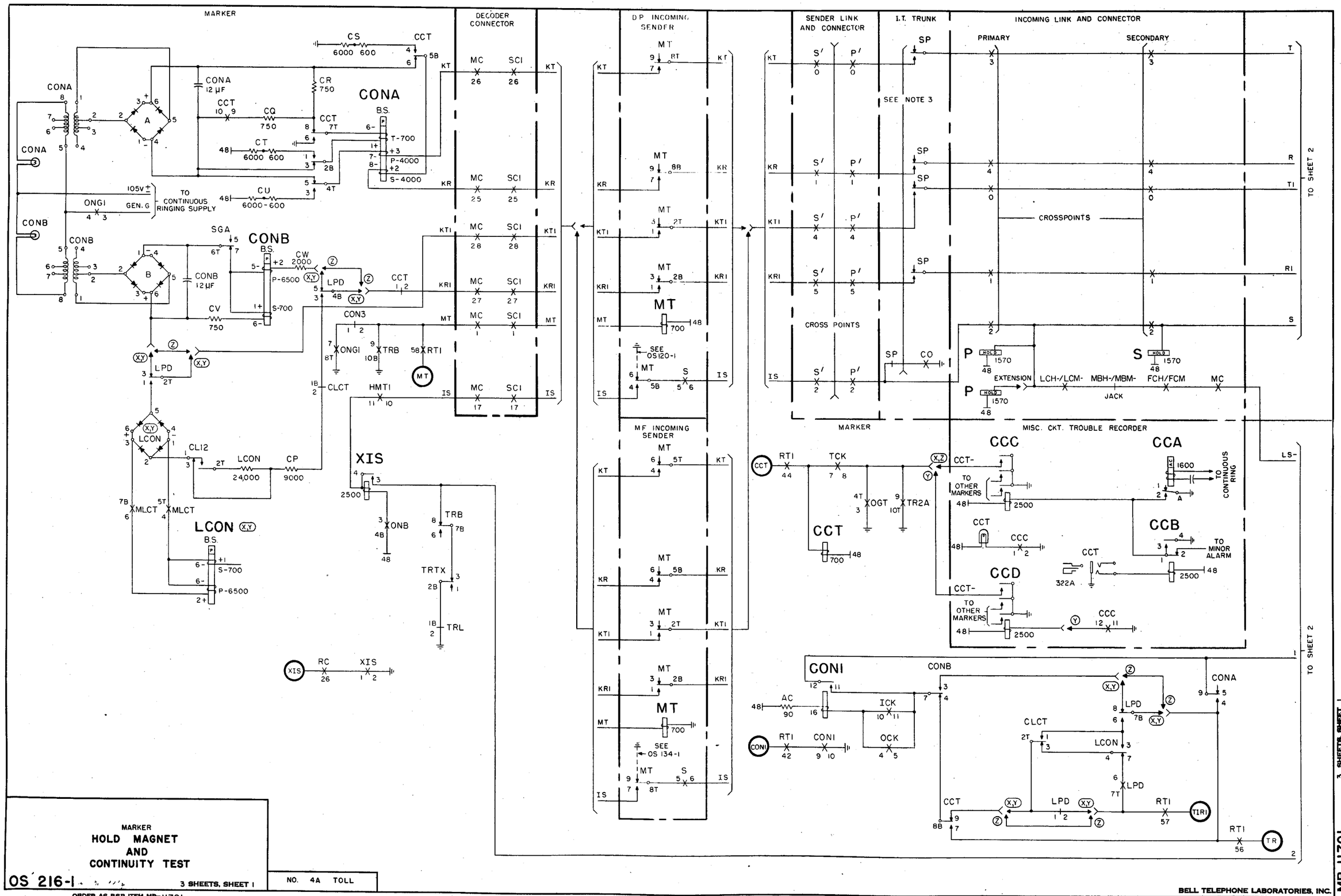

MARKER
HOLD MAGNET AND CONTINUITY TEST

OS 216-1 3 SHEETS, SHEET 1

NO. 4A TOLL

ORDER AS BSP ITEM MP-11701

BELL TELEPHONE LABORATORIES, INC.

PRINTED IN U. S. A.

MP-11701

3 SHEETS, SHEET 2

ISSUE	DATE
1	10-1-51
2 & 3	

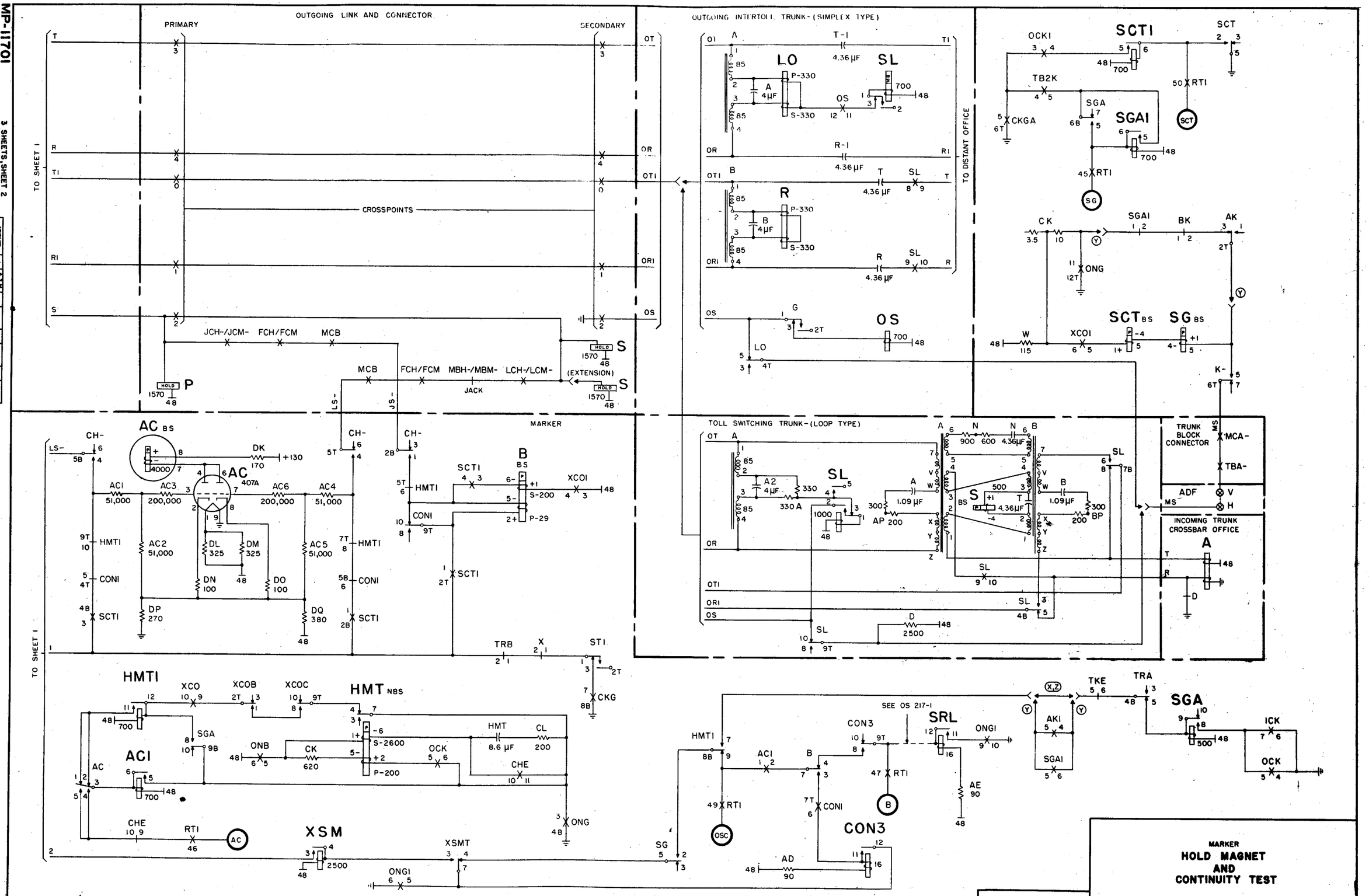

MP-11701

3 SHEETS, SHEET 3

ISSUE	1	A,S,R, & B
DATE	10-1-51	

SEQUENCE CHART

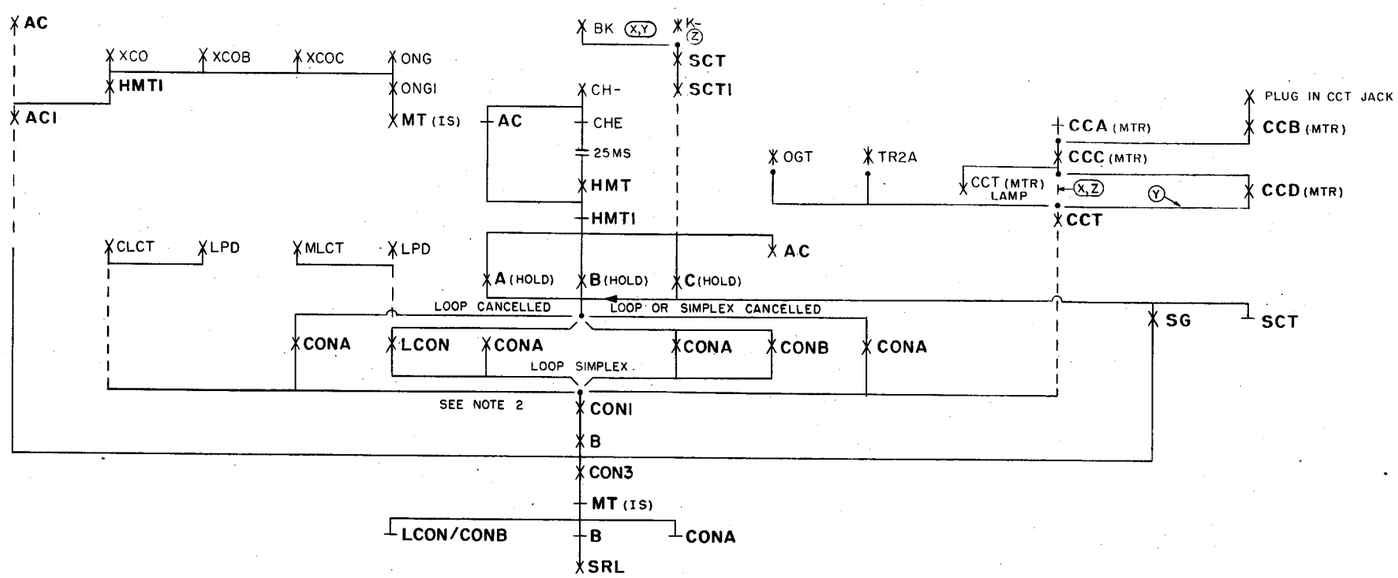

NOTES:

OS OPTION	FEATURE OR OPTION	SD OPTION	SD
X	FOR COMBINED MARKERS	X	68388-01
Y	FOR TOLL COMPLETING MARKERS	Y	68388-01
Z	FOR INTERTOLL MARKERS	Z	68388-01

2.

CONI RELAY OPERATING CONDITIONS				
CLASS RELAYS OPERATED	LPD RELAY OPERATED	TYPE OF OUTGOING TRUNK	CONDITIONS FOR CANCELLATION OF CONTINUITY TEST ON OTI-ORI	RELAY OPERATIONS REQUIRED TO OPERATE CONI RELAY
0-7 AND 14	NO	SIMPLEXED OT-OR & OTI-ORI	NONE-CONTINUITY TEST MADE	CONA AND CONB
			RINGING SUPPLY FAILURE, OUTGOING TRUNK TEST BY 17-C TESTBOARD, SECOND TRIAL, OR PLUG IN CC JACK	CONA AND CCT
8-13	YES	SIMPLEXED OT-OR AND LOOP OTI-ORI	NON-CONTINUITY TEST MADE	CONA AND LCON
			RINGING SUPPLY FAILURE, OUTGOING TRUNK TEST BY 17-C TESTBOARD, SECOND TRIAL, OR PLUG IN CC JACK	CONA AND CCT
			CANCEL LOOP CONTINUITY TEST INSTRUCTION FROM DECODER	CONA AND CLCT

3. CONTACT ARRANGEMENTS VARY DEPENDING ON TYPE OF INTERTOLL TRUNK

DECODER CONNECTOR CKT.	SD-68339-01, ISS. 2
INCOMING INTERTOLL TRK. CKT. DP	SD-68135-01, ISS. 13
INCOMING INTERTOLL TRK. CKT. MF	SD-68230-01, ISS. 4
INCOMING LINK & CONNECTOR CKT.	SD-68393-01, ISS. 5
INCOMING SENDER CKT. DP	SD-68221-01, ISS. 12
INCOMING SENDER CKT. MF	SD-68222-01, ISS. 12
* MARKER CKT.	SD-68388-01, ISS. 2
MISC. CKT. TROUBLE RECORDER	SD-68392-01, ISS. 3
OUTGOING IT TRUNK CKT DP OR MF CX SIGNAL	SD-68231-01, ISS. 5
OUTGOING LINK & CONNECTOR CKT.	SD-68394-01, ISS. 4
SENDER LINK & CONNECTOR CKT.	SD-68334-01, ISS. 11
TOLL SWITCHING TRUNK CKT.	SD-68242-01, ISS. 7
TRUNK BLOCK CONNECTOR CKT.	SD-68027-01, ISS. 16
2-WAY INTERTOLL TRK. CKT. DP	SD-68232-01, ISS. 9
2-WAY INTERTOLL TRK. CKT. MF	SD-68233-01, ISS. 11

MARKER

HOLD MAGNET AND CONTINUITY TEST

NO. 4A TOLL

3 SHEETS, SHEET 3

OS 216-1

MP-11700

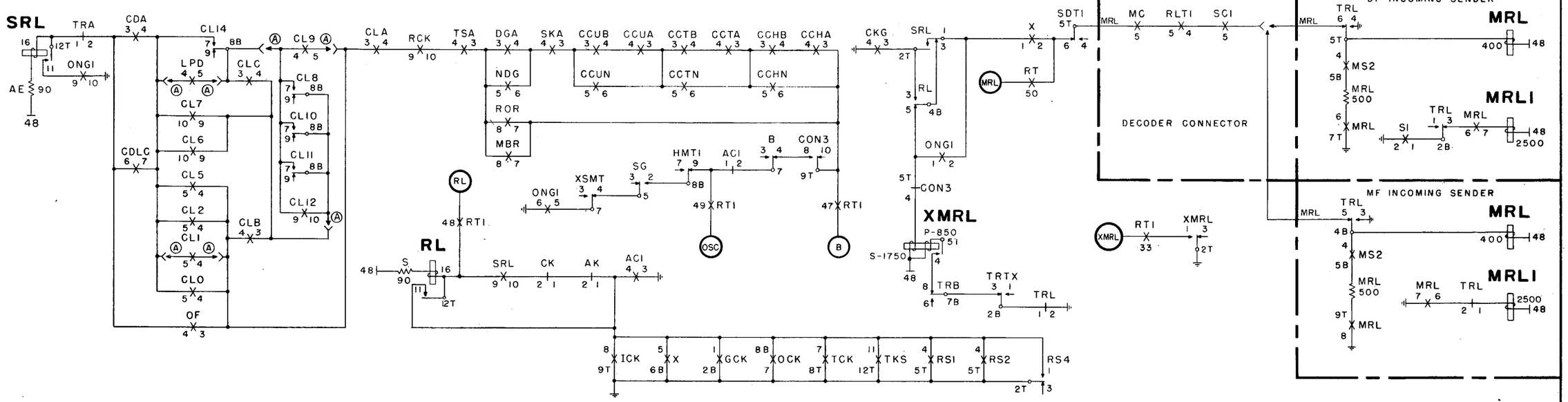

SEQUENCE CHART

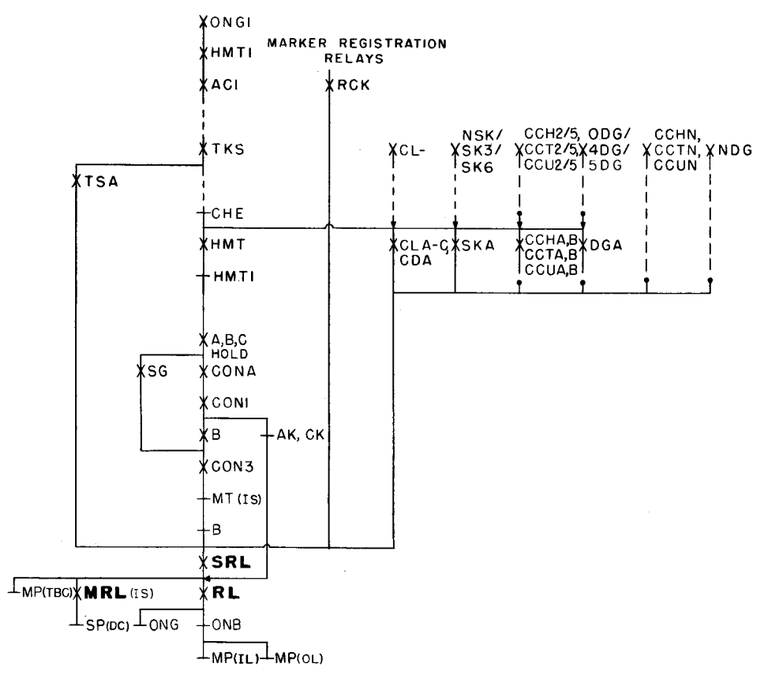

NOTES:

1.

OS OPTION	FEATURE OR OPTION	SD OPTION	SD
A	FOR COMBINED MARKERS	X	68388-01
	FOR TOLL COMPLETING MKRS.	Y	

DP INCOMING SDR. CKT.	SD-68221-01, ISS. 12
* MARKER CKT.	SD-68388-01, ISS. 2
DECODER CONNECTOR CKT.	SD-68339-01, ISS. 2
MF INCOMING SDR. CKT.	SD-68222-01, ISS. 12

ISSUE	DATE
1	5-21-57

MARKER

REGULAR RELEASE

NO. 4A TOLL

OS 217-1

BELL TELEPHONE LABORATORIES, INC.

PRINTED IN U. S. A.

ORDER AS BSP ITEM MP-11700

NOTES:

1.

OS OPTION	FEATURE OR OPTION	SD OPTION	SD
A	FOR TOLL COMPLETING & COMBINED MARKERS ONLY	X & Y	68388-01
B	FOR INTERTOLL OR COMBINED MARKERS	FIG. 5 & 11	68389-01 68392-01
C	FOR TOLL COMPLETING MARKERS	FIG. 6 & 11	68389-01 68392-01
D	FOR MARKER SHORT TIME-OUT WHEN OUTGOING PRIMARY EXTENSION FRAMES ARE PROVIDED	R R	68022-01 68394-01
E	WHEN INCOMING SECONDARIES ARE PAIRED	P	68388-01

2. IN CASES OF NO FACILITIES DUE TO HEAVY TRAFFIC, TIMING IS STOPPED UNTIL EITHER THE MARKER IS ABLE TO PROCEED OR TMI TIMER TIMES OUT. IF THE DECODER IS STILL ENGAGED, THE DECODER WILL CAUSE A TIME OUT AND RELEASE THE MARKER.

SEQUENCE CHARTS

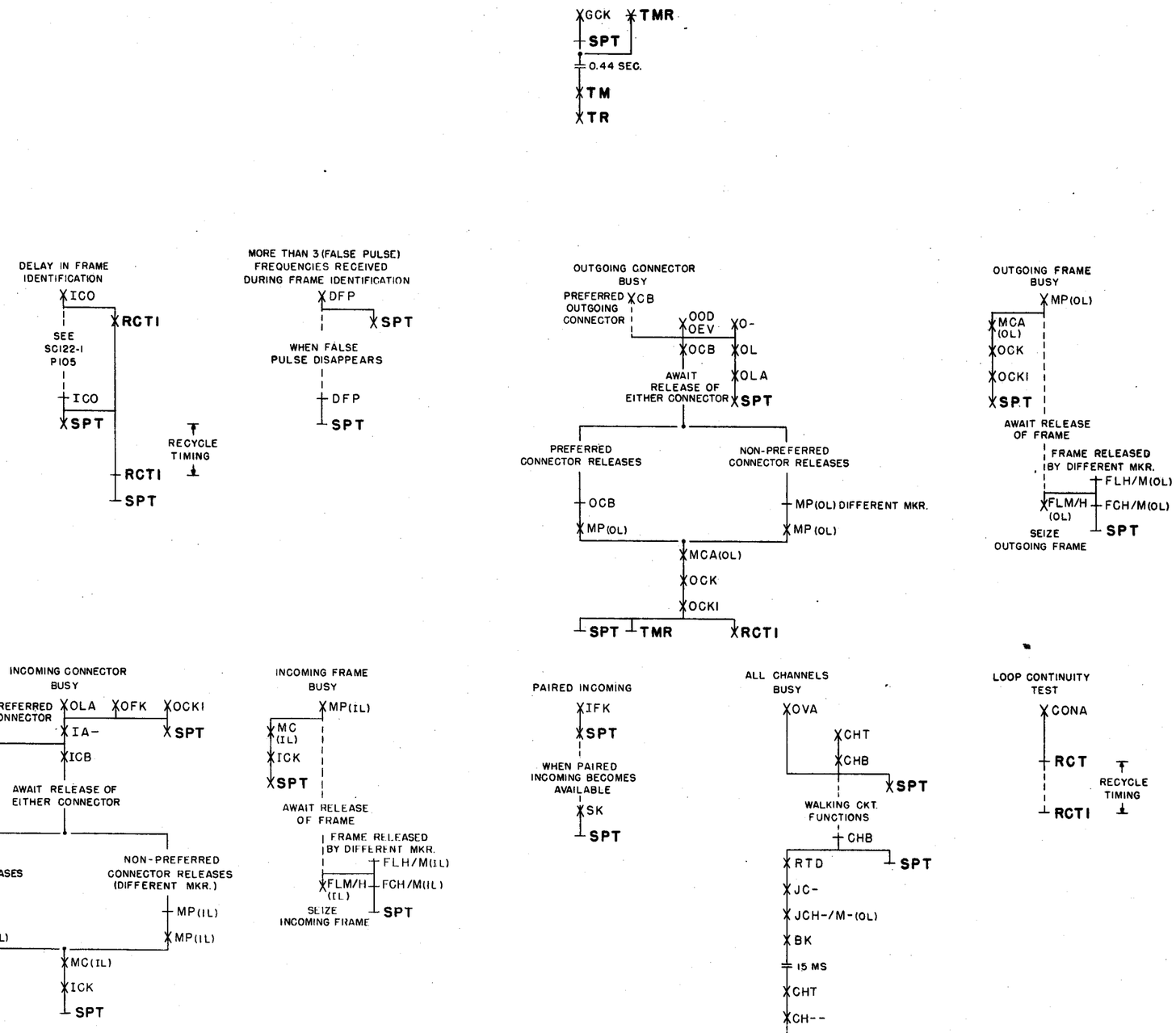

	DECODER CKT.	SD-68340-01, ISS. 2
	DECODER CONNECTOR CKT.	SD-68339-01, ISS. 2
	INCOMING LINK AND CONNECTOR CKT.	SD-68393-01, ISS. 4
*	MARKER CKT.	SD-68388-01, ISS. 2
	MARKER CONNECTOR CKT.	SD-68395-01, ISS. 2
	MARKER TROUBLE RECORDER CKT.	SD-68389-01, ISS. 2
	MISC. CKT. FOR MARKER FR.	SD-68410-01, ISS. 2
	MISC. CKT. TROUBLE RECORDER FR.	SD-68392-01, ISS. 2
	OUTGOING LINK AND CONNECTOR CKT.	SD-68394-01, ISS. 3
	TRUNK BLOCK CONNECTOR CKT.	SD-68027-01, ISS. 16

MARKER

WORK TIMER AND OVER-ALL TIMER

OS218-1 2 SHEETS, SHEET 1

NO. 4A TOLL

ORDER AS BSP ITEM MP-11766

ISSUE	1	A & B
DATE	1-18-52	

2 SHEETS, SHEET 1

MP-11766

BELL TELEPHONE LABORATORIES, INC.

PRINTED IN U. S. A.

MP-11766 2 SHEETS, SHEET 2

ISSUE	1	1	4	5	5
DATE	1-18-32				

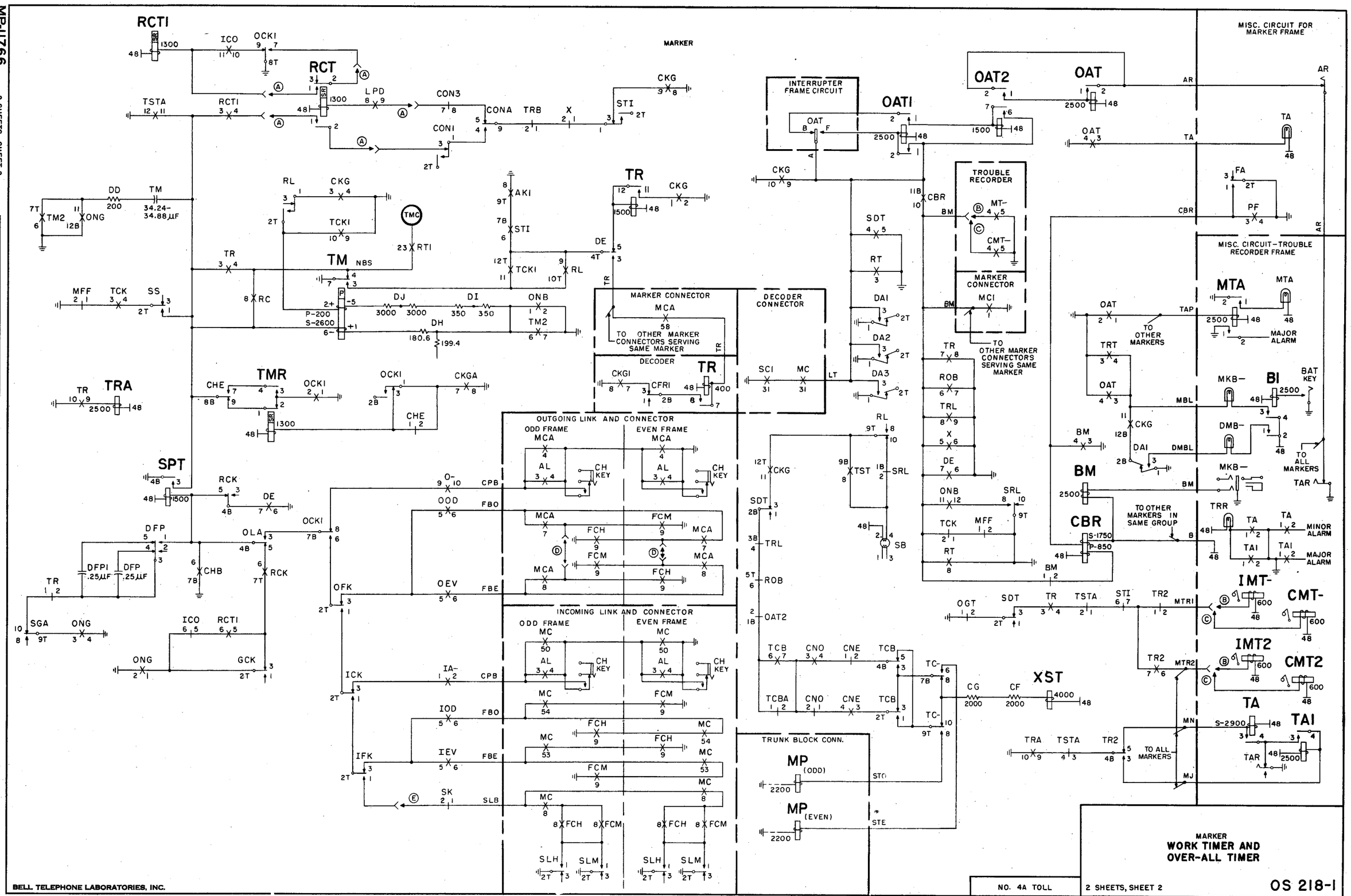

BELL TELEPHONE LABORATORIES, INC.

PRINTED IN U. S. A.

ORDER AS BSP ITEM MP-11766

NOTES:

1.

OS OPTION	FEATURE OR OPTION	SD OPTION	SD
A	WHEN INCOMING SECOND-ARIES ARE PAIRED	P	68388-01
B	OPTION A NOT USED	LOOP WIRING	68388-01
C	WHEN JUNCTOR PATTERNS ARE FURNISHED	U	68388-01

SEQUENCE CHART

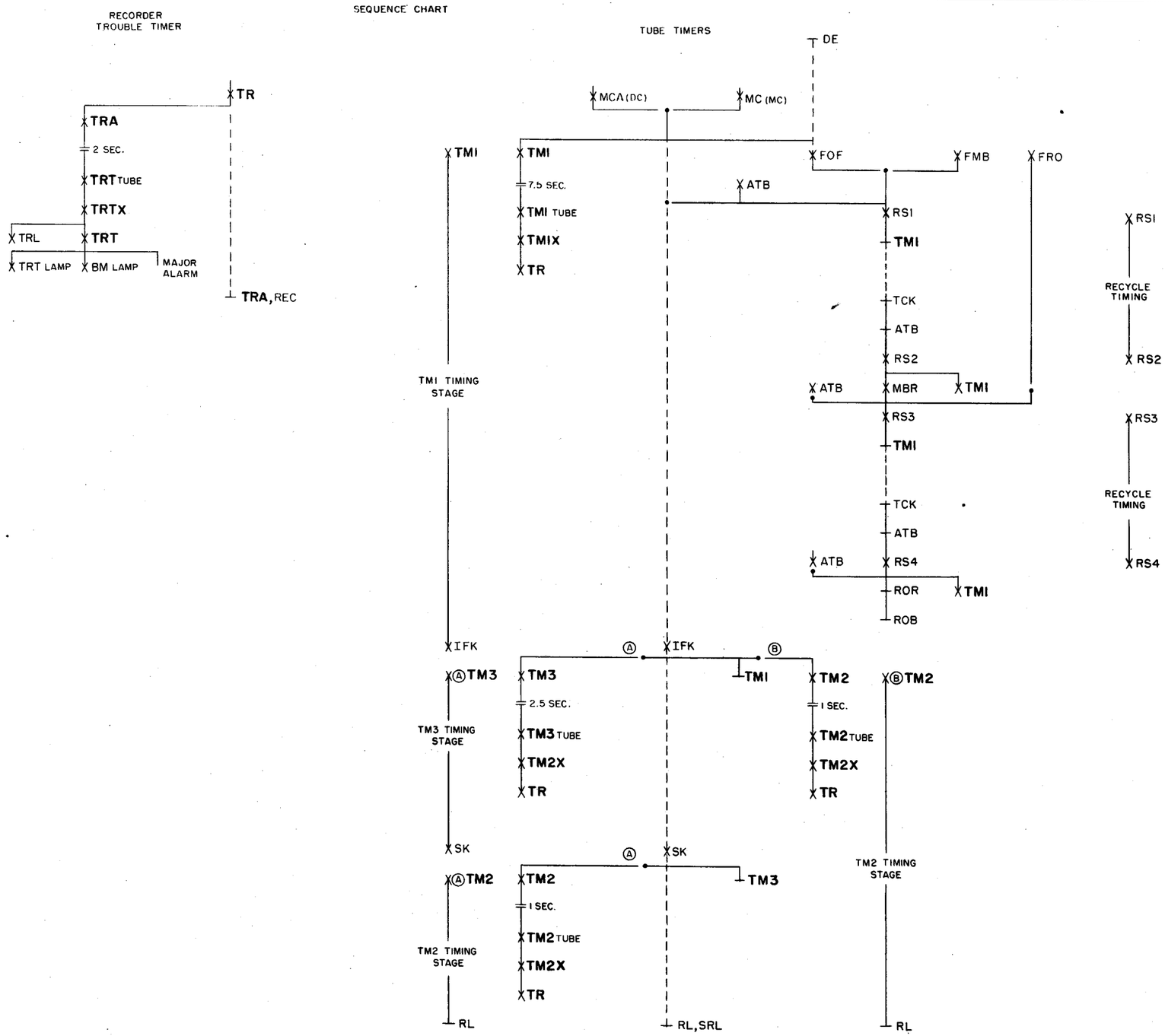

DECODER CKT.	SD-68340-01, ISS. 2
DECODER CONNECTOR CKT.	SD-68339-01, ISS. 3
*MARKER CKT.	SD-68388-01, ISS. 2
MARKER CONNECTOR CKT.	SD-68395-01, ISS. 2
MISC. CKT. MARKER FRAME	SD-68410-01, ISS. 2
MISC. CKT. TROUBLE RECORDER	SD-68392-01, ISS. 3
TRAFFIC REG. CKT.	SD-68412-01, ISS. 6

MARKER
TUBE TIMERS AND TROUBLE CROSS

OS 219-1

2 SHEETS, SHEET 1

NO. 4A TOLL

ORDER AS BSP ITEM MP-11764

ISSUE	1	WAY/AB
DATE		1-17-62

2 SHEETS, SHEET 1

MP-11764

BELL TELEPHONE LABORATORIES, INC.

PRINTED IN U. S. A.

MP-11764

2 SHEETS, SHEET 2

ISSUE	DATE
1	1-17-52

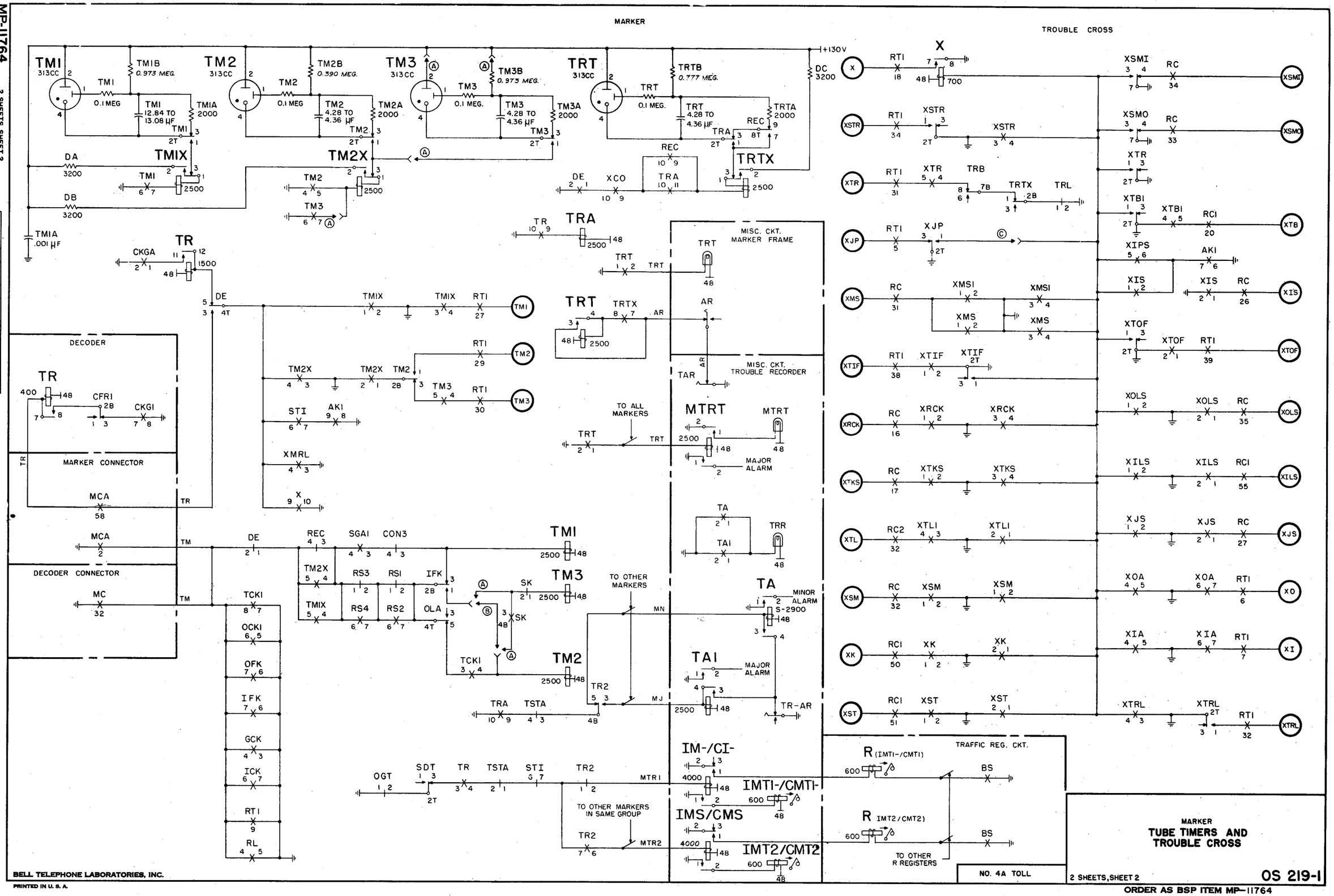

MARKER
TUBE TIMERS AND TROUBLE CROSS

NO. 4A TOLL

2 SHEETS, SHEET 2

OS 219-1

BELL TELEPHONE LABORATORIES, INC.
PRINTED IN U. S. A.

ORDER AS BSP ITEM MP-11764

MP-11760

ISSUE	1	1	
DATE	1-3-52		

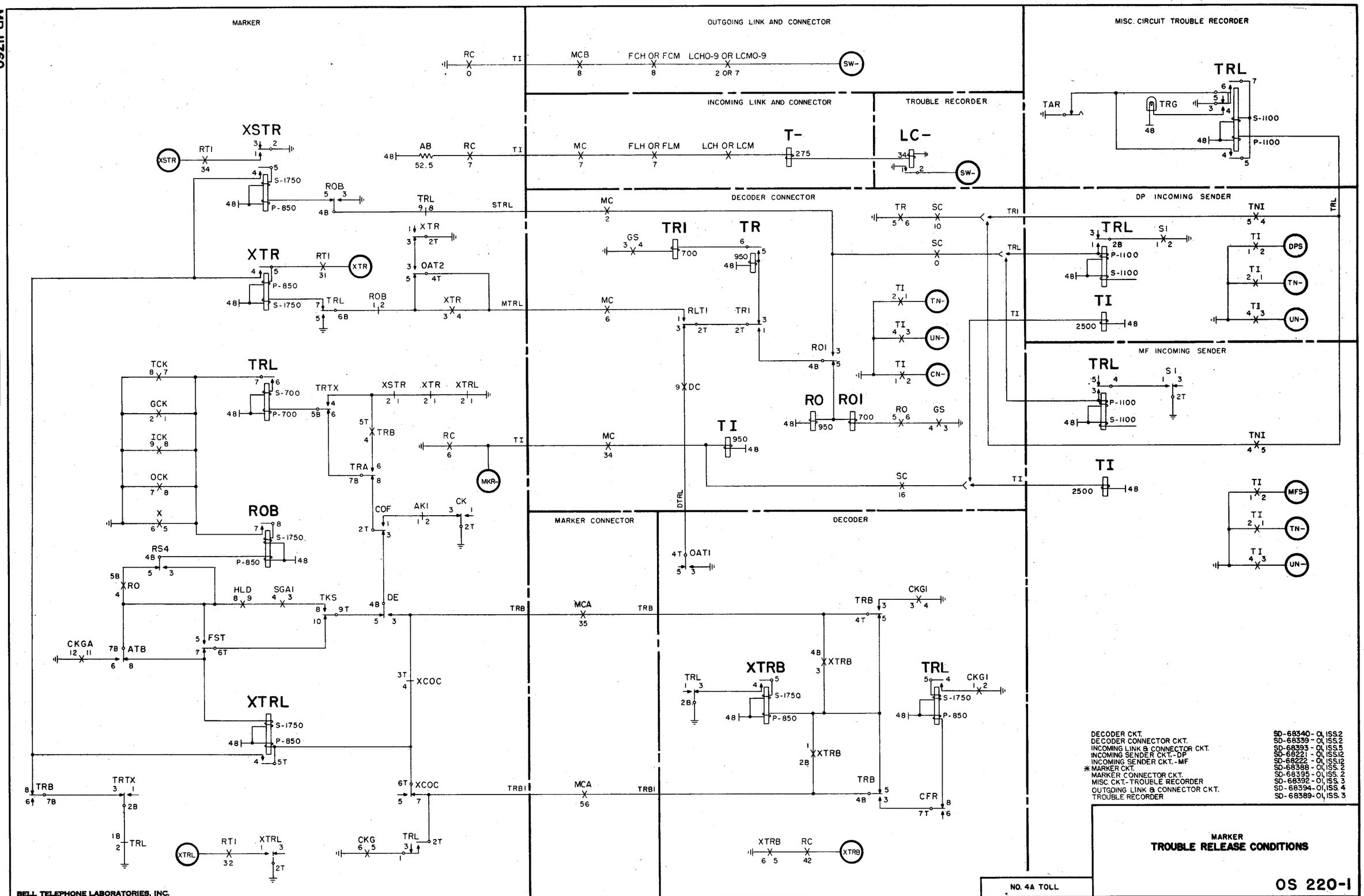

DECODER CKT. SD-68340-01, ISS.2
DECODER CONNECTOR CKT. SD-68339-01, ISS.2
INCOMING LINK & CONNECTOR CKT. SD-68393-01, ISS.5
INCOMING SENDER CKT.-DP SD-68221-01, ISS.12
INCOMING SENDER CKT.-MF SD-68222-01, ISS.12
* MARKER CKT. SD-68388-01, ISS. 2
MARKER CONNECTOR CKT. SD-68395-01, ISS. 2
MISC. CKT.-TROUBLE RECORDER SD-68392-01, ISS. 3
OUTGOING LINK & CONNECTOR CKT. SD-68394-01, ISS. 4
TROUBLE RECORDER SD-68389-01, ISS. 3

MARKER
TROUBLE RELEASE CONDITIONS

OS 220-1

ORDER AS BSP ITEM MP-11760

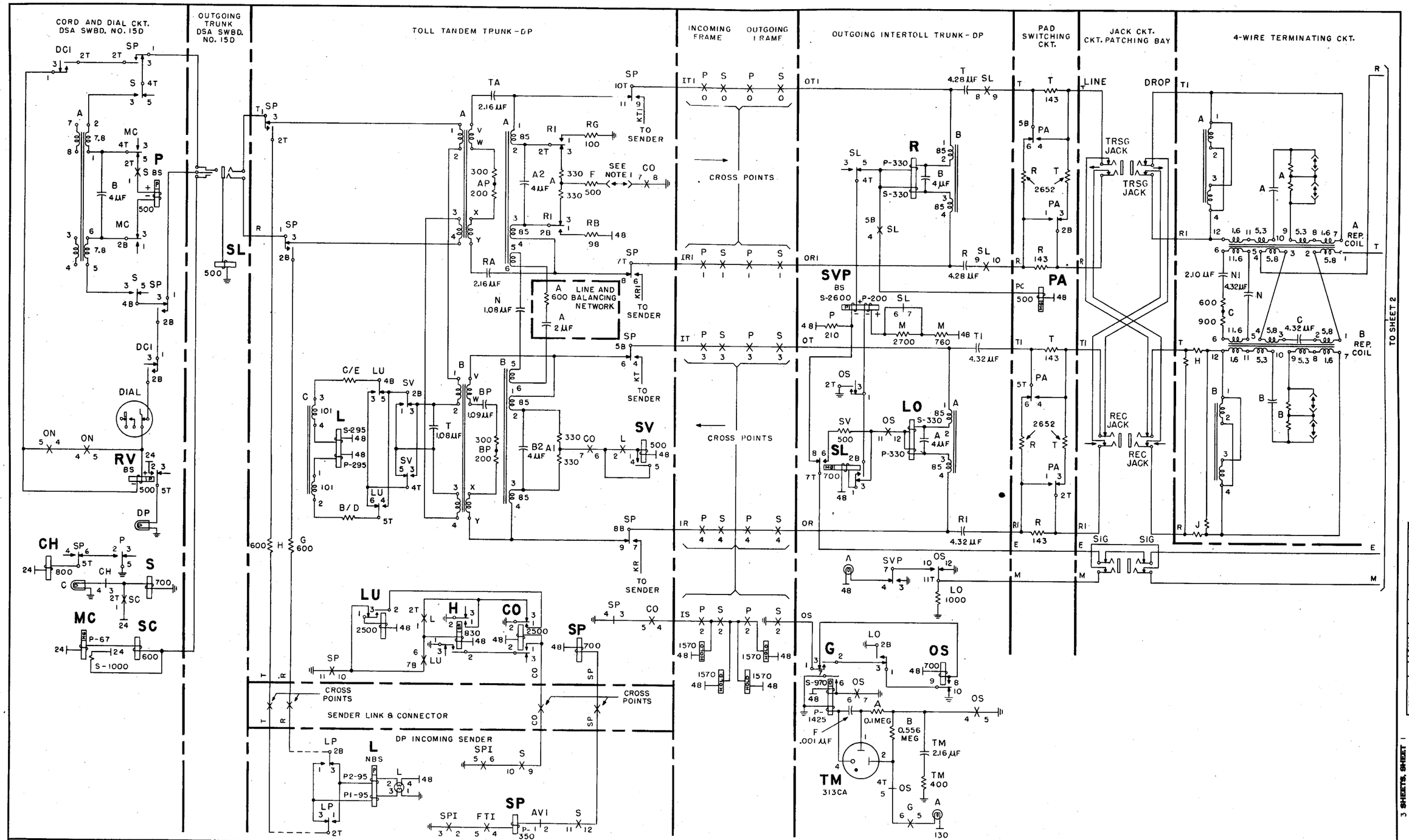
CORD AND DIAL CKT. DSA SWBD. NO. 15D
OUTGOING TRUNK DSA SWBD. NO. 15D
TOLL TANDEM TRUNK-DP
INCOMING FRAME
OUTGOING FRAME
OUTGOING INTERTOLL TRUNK-DP
PAD SWITCHING CKT.
JACK CKT. CKT. PATCHING BAY
4-WIRE TERMINATING CKT.
CROSS POINTS
LINE AND BALANCING NETWORK
TO SENDER
SEE NOTE 1
SENDER LINK & CONNECTOR
DP INCOMING SENDER
TRSG JACK
REC JACK
A REP. COIL
B REP. COIL
TO SHEET 2
ESTABLISHED CONNECTION
OUTWARD SWITCHBOARD TO STEP-BY-STEP SUBSCRIBER
OS 221-1
3 SHEETS, SHEET 1
NO. 4A TOLL
ORDER AS BSP ITEM MP-11688
BELL TELEPHONE LABORATORIES, INC.
PRINTED IN U. S. A.
MP-11688
3 SHEETS, SHEET 1
ISSUE 1
DATE 9-20-51

MP-11688 3 SHEETS, SHEET 2

ISSUE	DATE
1	9-20-35

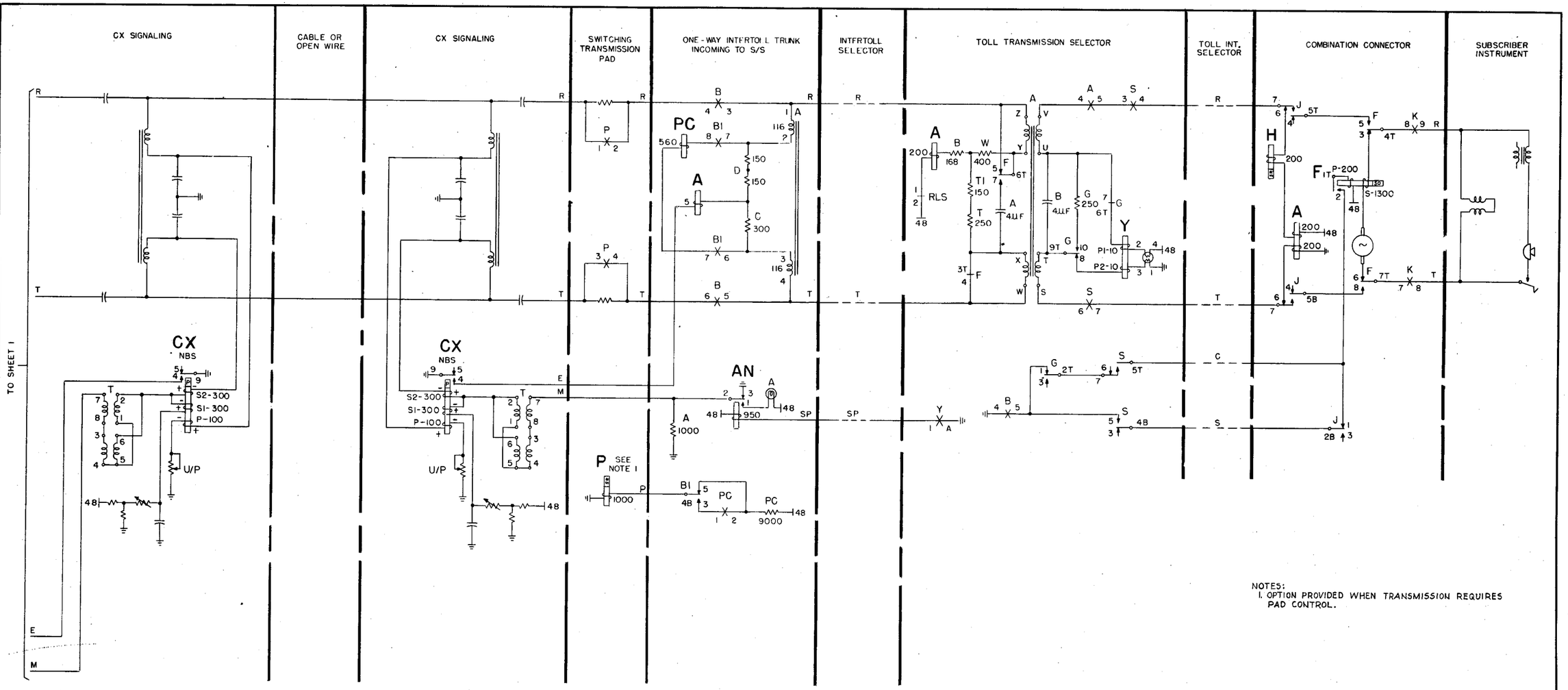

NOTES:
1. OPTION PROVIDED WHEN TRANSMISSION REQUIRES PAD CONTROL.

COMBINATION CONNECTOR CKT.	SD-30228-01, ISS. 25
CORD CKT. DSA SWBD. NO. 15D	SD-96131-01, ISS. 13
CX SIGNALING CKT. TYPE B	SD-95048-01, ISS. 12
DIAL CKT. DSA SWBD. NO. 15D	SD-96232-01, ISS. 5
DP INCOMING SENDER CKT.	SD-68221-01, ISS. 12
INCOMING LINK & CONN. CKT	SD-68393-01, ISS. 5
INTERTOLL SELECTOR CKT.	SD-64470-01, ISS. 5
JACK CKT.-CKT. PATCH BAY	SD-68327-01, ISS. 5
LINE & BALANCING NETWORK CKT.	SD-90517-01, ISS. 13
ONE-WAY IT TRUNK CKT. INCOMING TO S/S	SD-64590-01, ISS. 9
OUTGOING IT TRUNK-DP OR MF CX SIG.	SD-68231-01, ISS. 5
OUTGOING LINK & CONN. CKT.	SD-68394-01, ISS. 4
OUTGOING TRUNK CKT. SWBD. NO. 15D	SD-96164-01, ISS. 10
PAD SWITCHING CKT.	SD-68285-01, ISS. 6
SWITCHING TRANSMISSION PAD CKT.	SD-64565-01, ISS. 2
TOLL INTERMEDIATE SELECTOR CKT.	SD-31179-01, ISS. 20
TOLL TANDEM TRUNK CKT. DP	SD-68315-01, ISS. 6
TOLL TRANSMISSION SELECTOR CKT.	SD-31681-01, ISS. 8
4-WIRE TERMINATING SET (TYPICAL)	SD-95489-01, ISS. 1

ESTABLISHED CONNECTION

OUTWARD SWITCHBOARD TO STEP-BY-STEP SUBSCRIBER

3 SHEETS, SHEET 2

OS 221-1

NO. 4A TOLL

BELL TELEPHONE LABORATORIES, INC.

PRINTED IN U.S.A.

ORDER AS BSP ITEM MP-11688

MP-11688

3 SHEETS, SHEET 3

ISSUE	1	A.S.B.
DATE	9-20-51	

SEQUENCE CHART
RELEASE OF CALL AFTER SUBSCRIBER HANGS UP
FOR CIRCUIT BUILDUP SEE SC 127-1

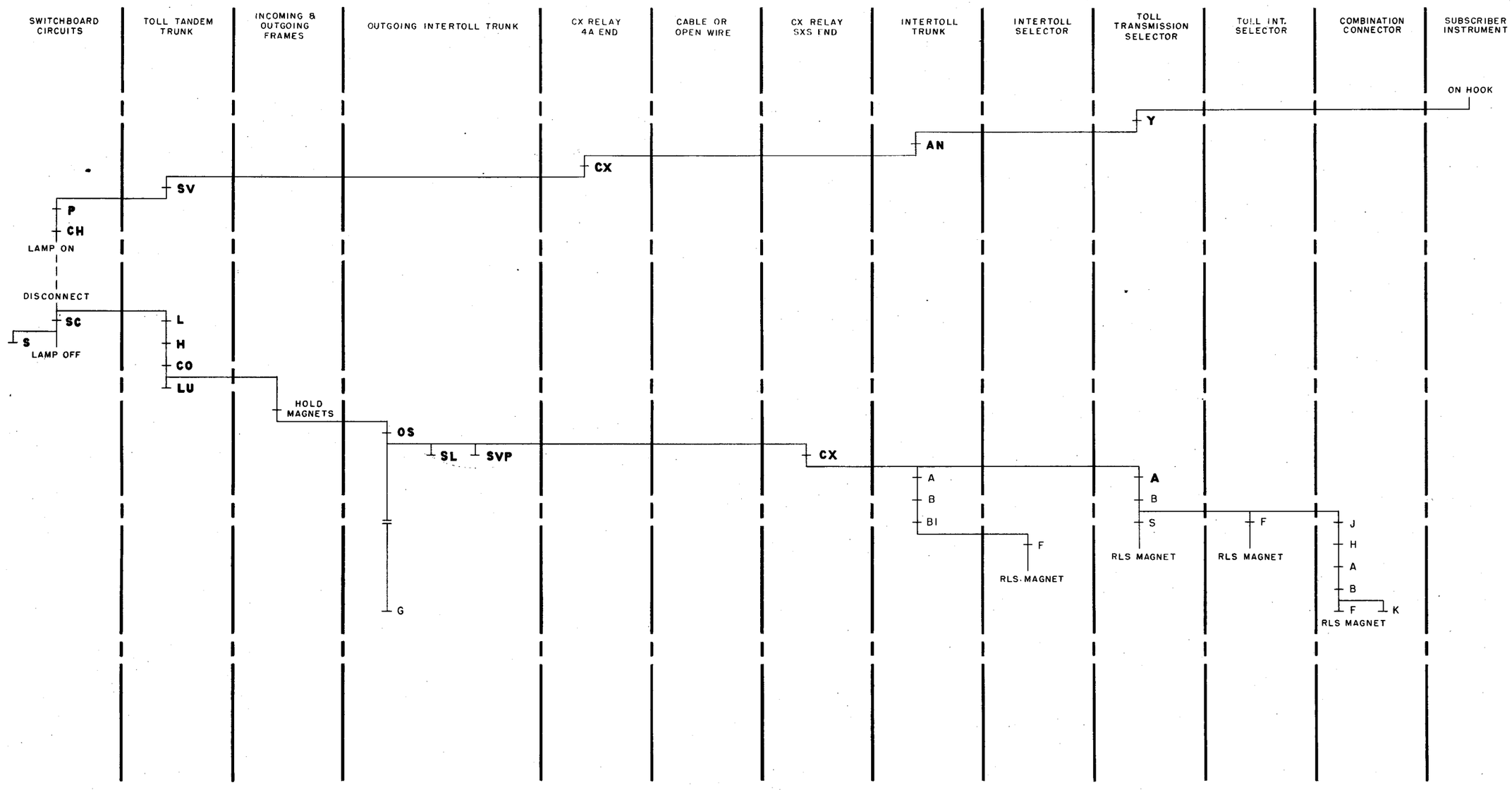

ESTABLISHED CONNECTION
OUTWARD SWITCHBOARD TO STEP-BY-STEP SUBSCRIBER

NO. 4A TOLL

3 SHEETS, SHEET 3

OS 221-1

BELL TELEPHONE LABORATORIES, INC.
PRINTED IN U.S.A.

ORDER AS BSP ITEM MP-11688

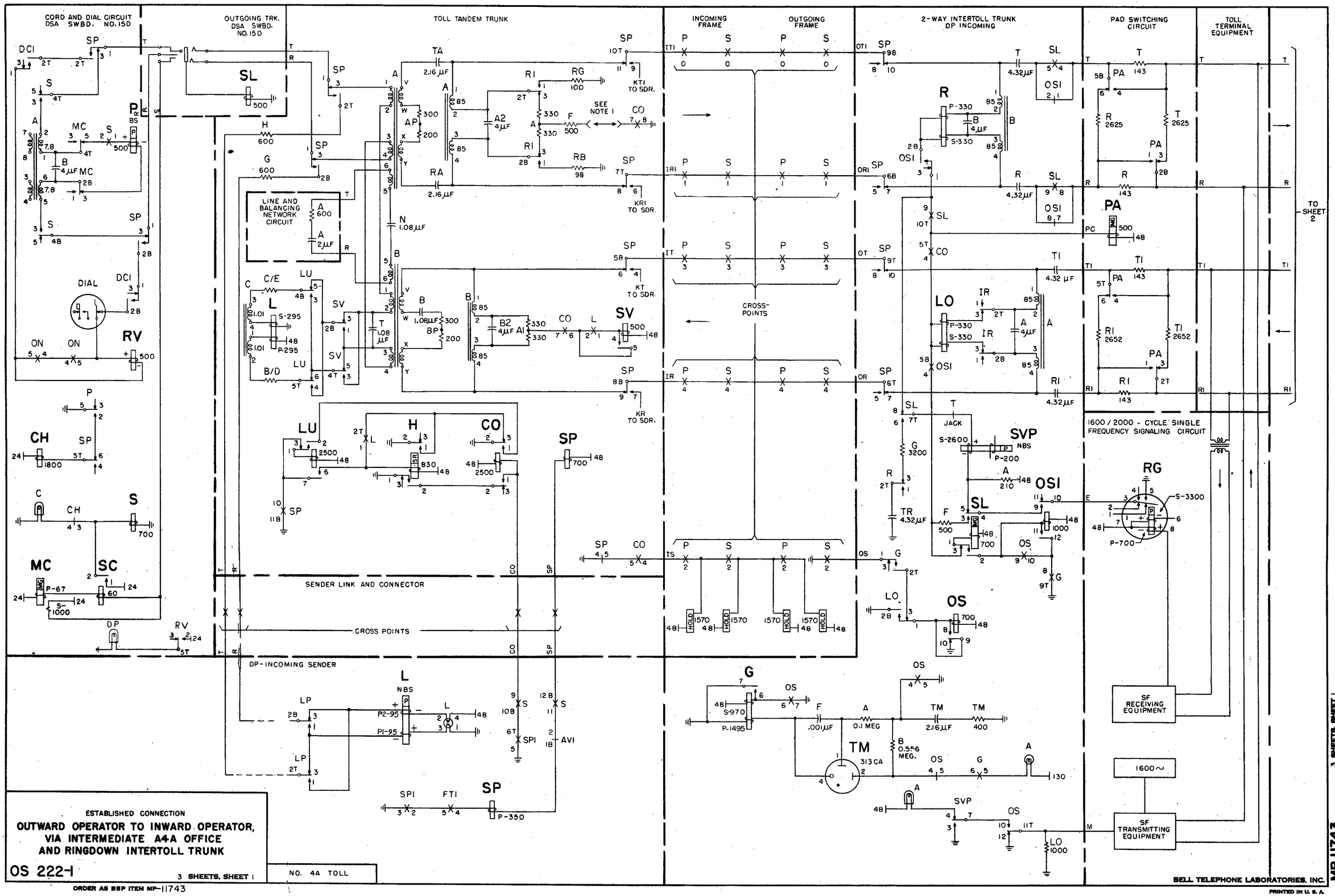
CORD AND DIAL CIRCUIT DSA SWBD. NO. 15D
OUTGOING TRK. DSA SWBD. NO. 15D
TOLL TANDEM TRUNK
INCOMING FRAME
OUTGOING FRAME
2-WAY INTERTOLL TRUNK DP INCOMING
PAD SWITCHING CIRCUIT
TOLL TERMINAL EQUIPMENT
TO SHEET 2
LINE AND BALANCING NETWORK CIRCUIT
CROSS-POINTS
SENDER LINK AND CONNECTOR
CROSS POINTS
DP-INCOMING SENDER
1600 / 2000 - CYCLE SINGLE FREQUENCY SIGNALING CIRCUIT
SF RECEIVING EQUIPMENT
SF TRANSMITTING EQUIPMENT
1600~
ESTABLISHED CONNECTION
OUTWARD OPERATOR TO INWARD OPERATOR, VIA INTERMEDIATE A4A OFFICE AND RINGDOWN INTERTOLL TRUNK
OS 222-1
3 SHEETS, SHEET 1
NO. 4A TOLL
ORDER AS BSP ITEM MP-11743
BELL TELEPHONE LABORATORIES, INC.
PRINTED IN U. S. A.
MP-11743
3 SHEETS, SHEET 1
ISSUE 1
DATE 12-6-57

MP-11743 3 SHEETS, SHEET 2

ISSUE	DATE
1	12-6-61

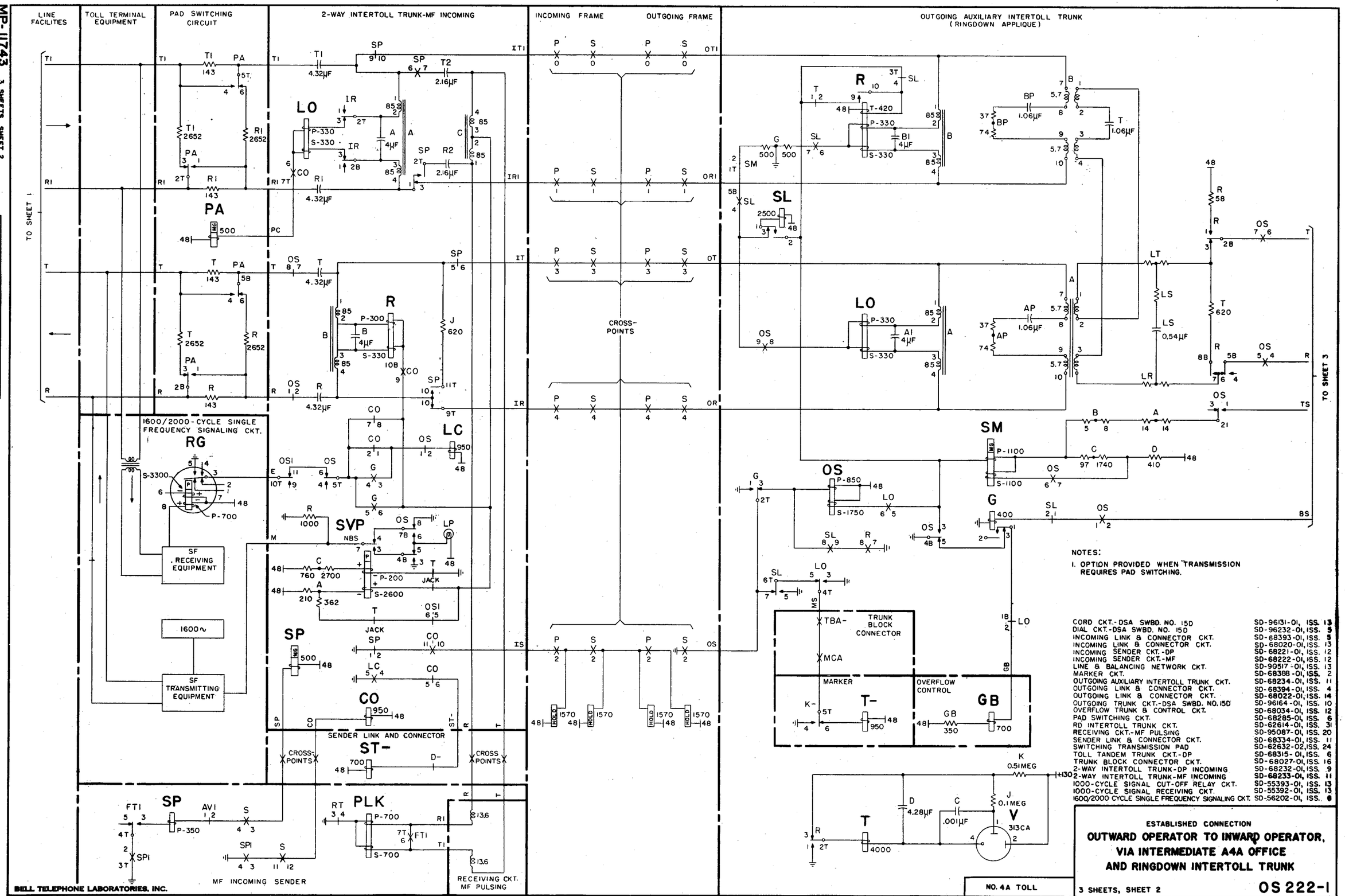

BELL TELEPHONE LABORATORIES, INC.

PRINTED IN U. S. A.

ORDER AS BSP ITEM MP-11743

MP-11743 3 SHEETS, SHEET 3

ISSUE	DATE
1	12-6-47

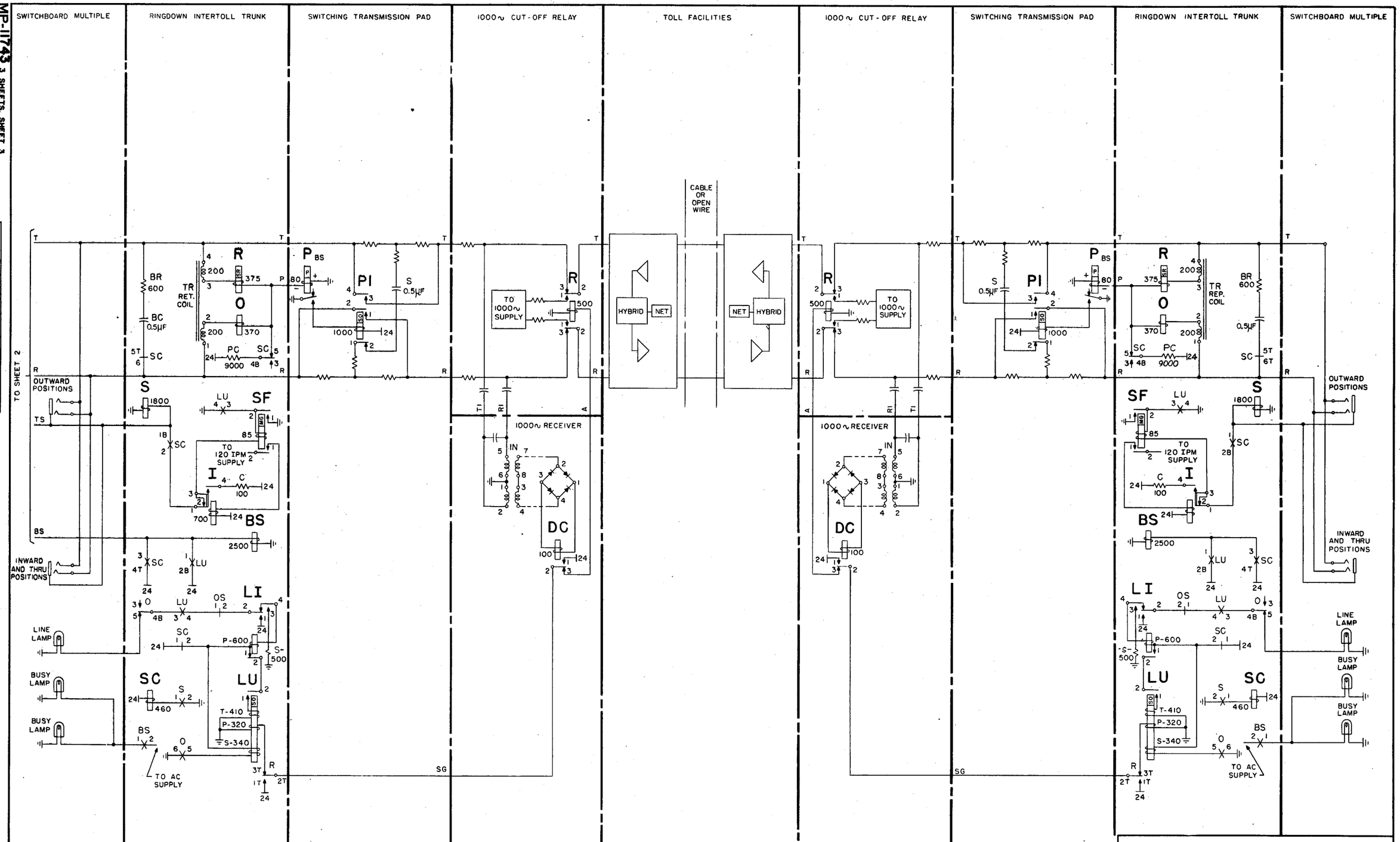

ESTABLISHED CONNECTION

OUTWARD OPERATOR TO INWARD OPERATOR, VIA INTERMEDIATE A4A OFFICE AND RINGDOWN INTERTOLL TRUNK

NO. 4A TOLL

3 SHEETS, SHEET 3

OS 222-1

BELL TELEPHONE LABORATORIES, INC.

PRINTED IN U. S. A.

ORDER AS BSP ITEM MP-11743

MP-11744 3 SHEETS, SHEET 3

ISSUE	DATE
1	11-9-66

FRAME IDENTIFICATION FREQUENCY SUPPLY

ALARM AND TRANSFER RELAYS

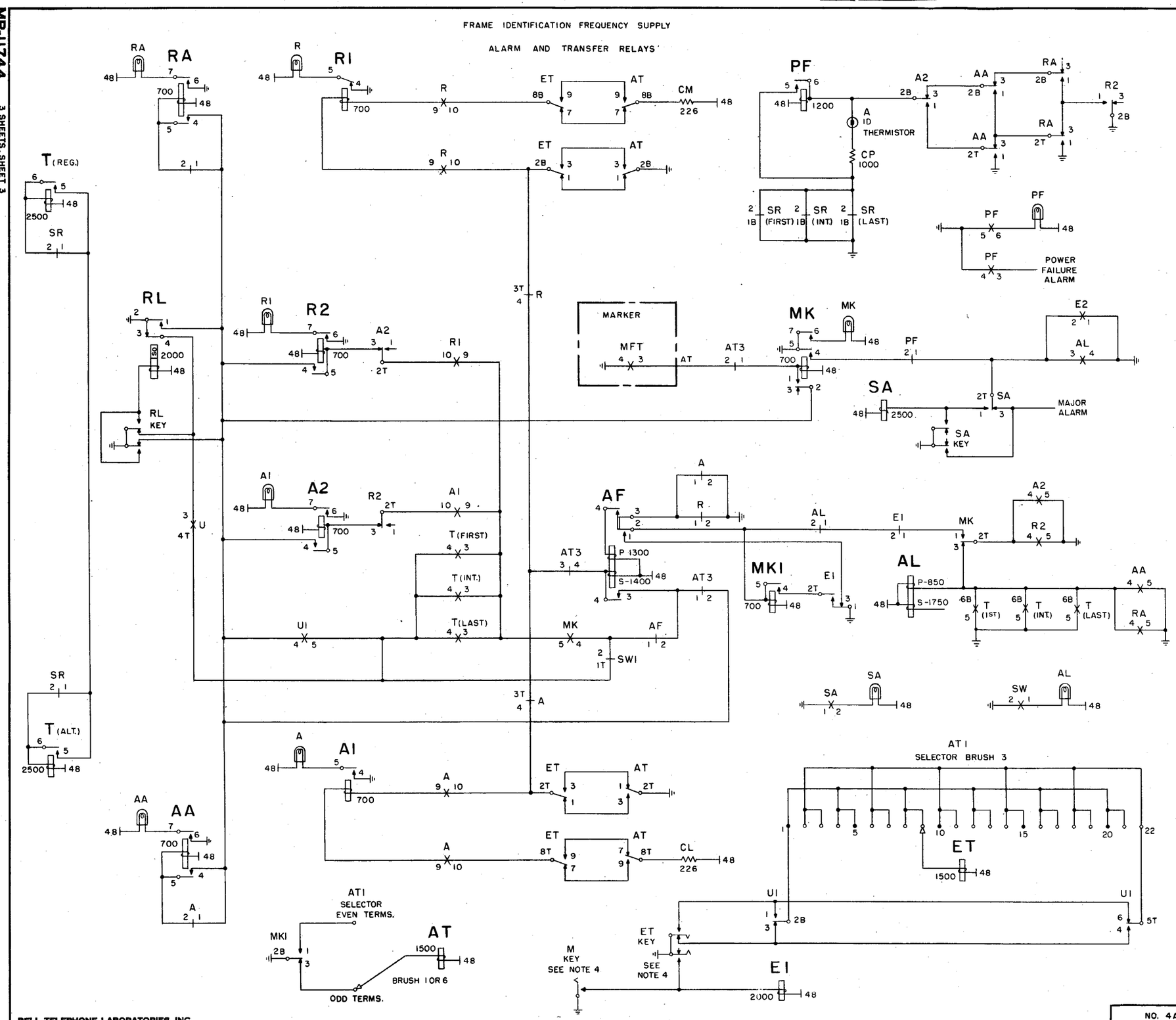

SEQUENCE CHART

AMPLIFIER FAILURE
(ASSUME REGULAR SUPPLY IN USE)

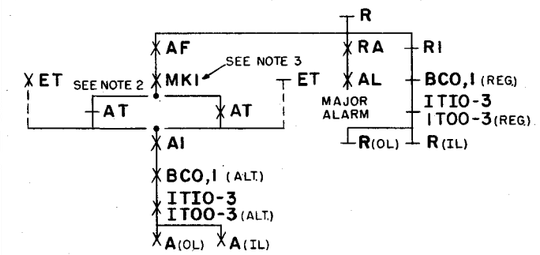

MARKER FAILURE
(ASSUME REGULAR SUPPLY IN USE)

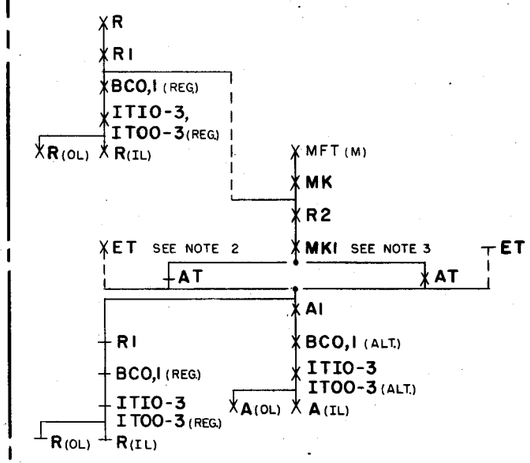

NOTES:

1.

OS OPTION	FEATURE OR OPTION	SD OPTION	SD
A	FOR TWO-TRAIN OFFICE	FIGS 19,20	68119-01
B	FOR COMBINED TRAIN OFFICE	FIG. 19, LOOPED WIRING	68119-01

2. IF MKI RELAY OPERATES WHEN ATI SELECTOR IS ON AN ODD TERM.
3. IF MKI RELAY OPERATES WHEN ATI SELECTOR IS ON AN EVEN TERM.
4. AUTOMATIC THROWOVER FROM ONE SUPPLY TO THE OTHER OCCURS EVERY 88 MINUTES. OPERATION OF ET KEY WILL CAUSE THROWOVER IN EMERGENCY. M KEY SHOULD BE USED TO BLOCK SUPPLY IN TROUBLE WHILE REPAIRS ARE MADE.
5. SR & T RELAYS FURNISHED ONE PER GROUP OF TEN INCOMING FRAMES, OR TEN OUTGOING FRAMES.

CHANNEL FREQUENCY OSCILLATOR CKT.	SD-70217-01, ISS. 12
*FRAME IDENTIFICATION FREQUENCY SUPPLY CKT.	SD-68119-01, ISS. 14
INCOMING LINK AND CONNECTOR CKT.	SD-68393-01, ISS. 5
MARKER CKT.	SD-68388-01, ISS. 2
OUTGOING LINK AND CONNECTOR CKT.	SD-68394-01, ISS. 4

FRAME IDENTIFICATION FREQUENCY SUPPLY

NO. 4A TOLL

3 SHEETS, SHEET 3

OS 223-1

BELL TELEPHONE LABORATORIES, INC.
PRINTED IN U. S. A.
ORDER AS BSP ITEM MP-11744

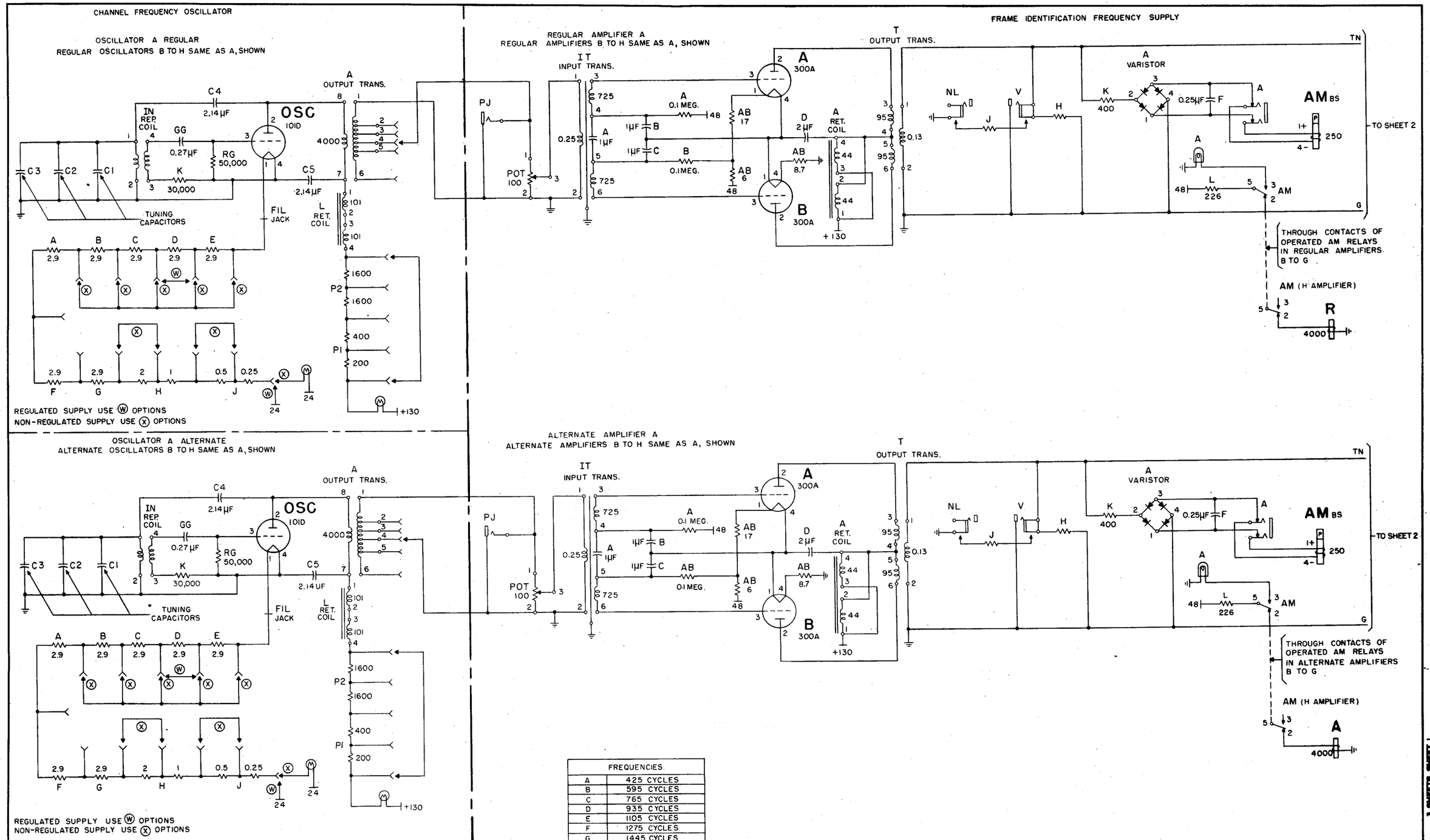

FREQUENCIES	
A	425 CYCLES
B	595 CYCLES
C	765 CYCLES
D	935 CYCLES
E	1105 CYCLES
F	1275 CYCLES
G	1445 CYCLES
H	1615 CYCLES

FRAME IDENTIFICATION FREQUENCY SUPPLY

OS 223-1 — 3 SHEETS, SHEET 1 — NO. 4A TOLL

ORDER AS BSP ITEM MP-11744

BELL TELEPHONE LABORATORIES, INC.

PRINTED IN U. S. A.

MP-11744

3 SHEETS, SHEET 1

ISSUE	1	12-9-47
DATE		

MP-11744

3 SHEETS, SHEET 2

ISSUE	DATE
1	12-6-41

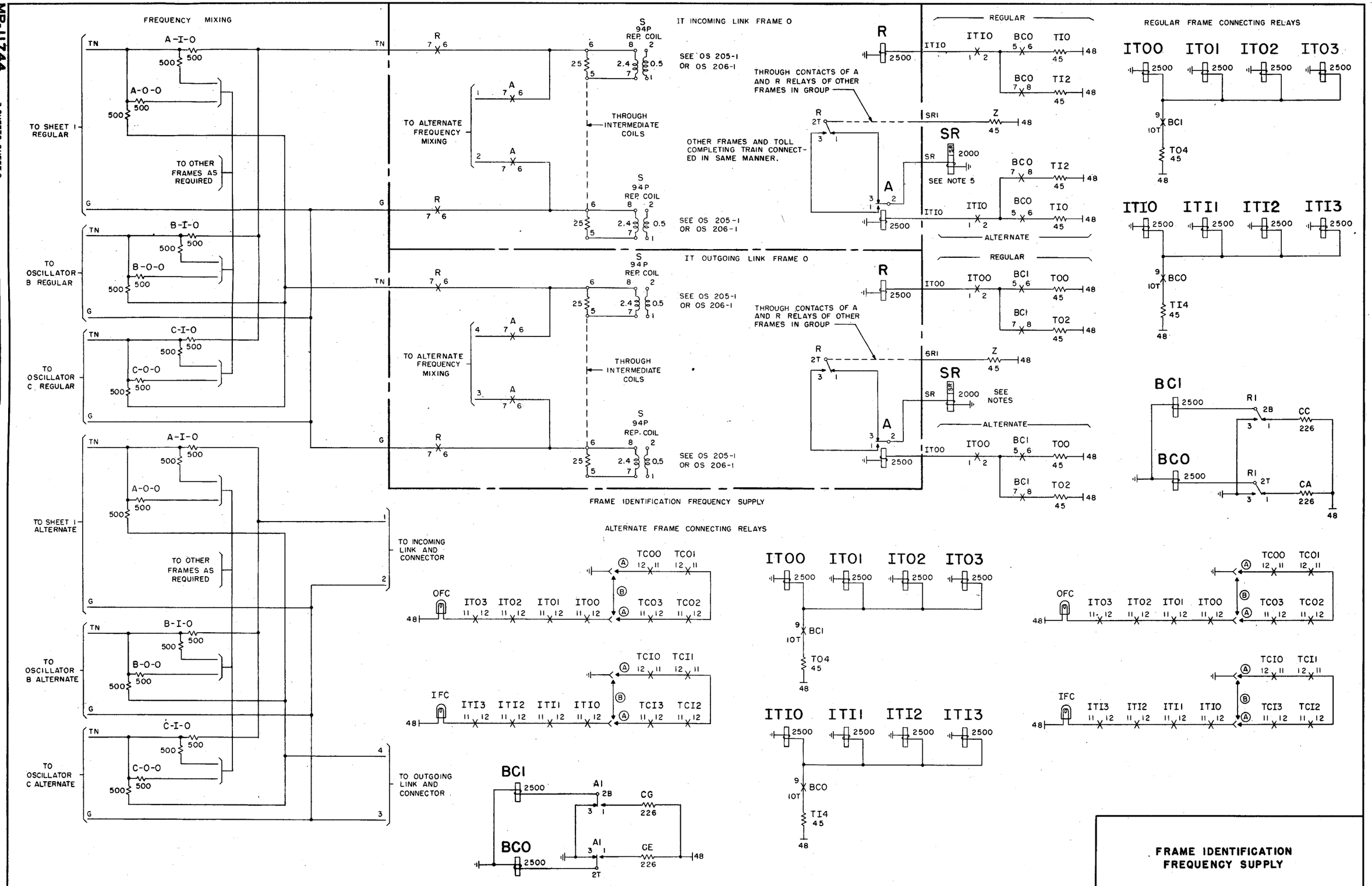

FRAME IDENTIFICATION FREQUENCY SUPPLY

NO. 4A TOLL

3 SHEETS, SHEET 2

OS 223-1

BELL TELEPHONE LABORATORIES, INC.

PRINTED IN U. S. A.

ORDER AS BSP ITEM MP-11744

MF CURRENT SUPPLY

ODD OSCILLATOR GROUP
SEE NOTES 1 & 2

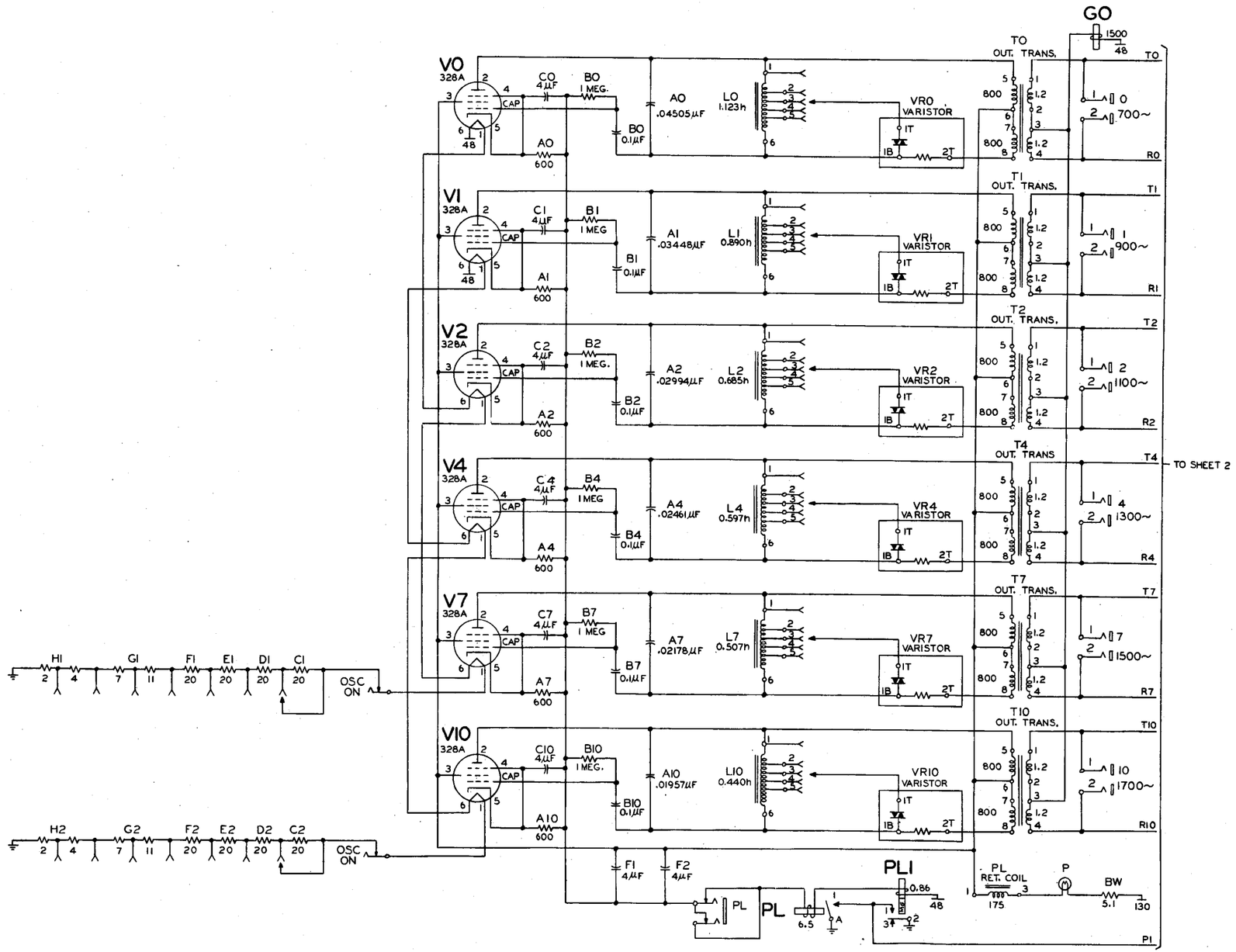

MF CURRENT SUPPLY
SENDERS AND KEYSETS

OS 224-1

3 SHEETS, SHEET 1

NO. 4A TOLL

ORDER AS BSP ITEM MP-11745

BELL TELEPHONE LABORATORIES, INC.

PRINTED IN U. S. A.

MP-11745

3 SHEETS, SHEET 1

ISSUE	1	2	3	4	5
DATE	12-5-41				

MP-11745 3 SHEETS, SHEET 2

ISSUE	1	2
DATE	12-8-67	

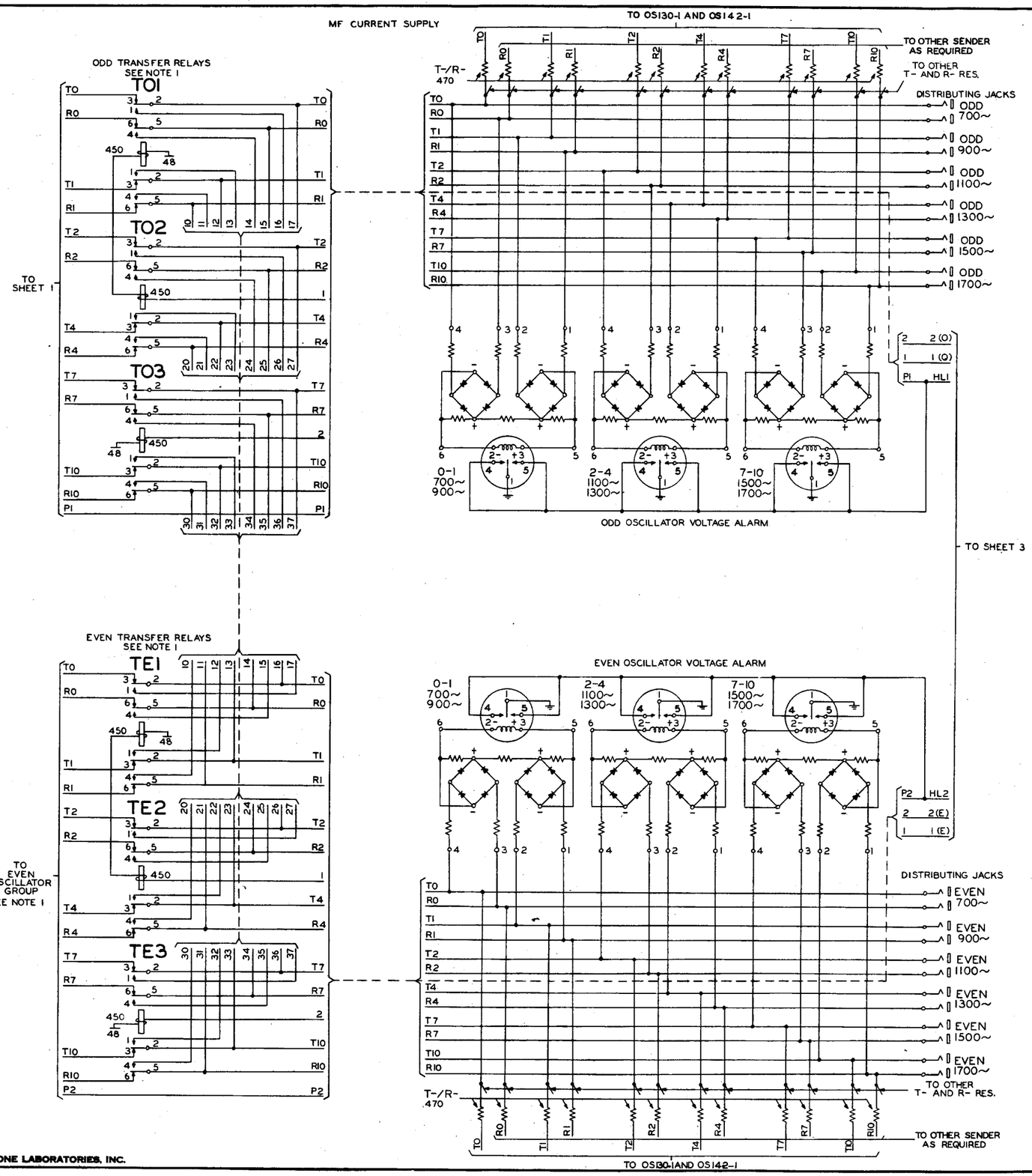

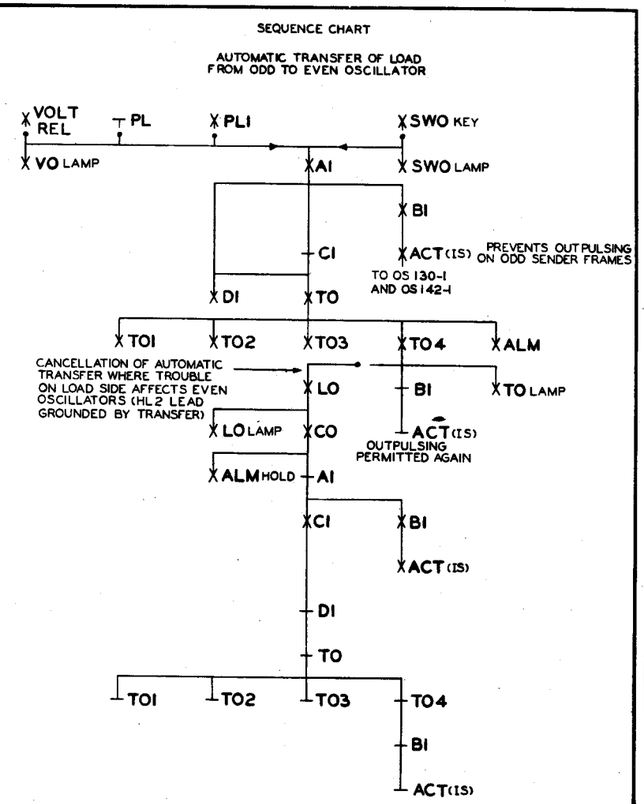

NOTES:

1. UNDER NORMAL OPERATING CONDITIONS THE LOAD IS DIVIDED BETWEEN THE ODD AND EVEN OSCILLATORS. UNDER TRANSFER CONDITIONS EITHER OSCILLATOR CAN CARRY THE ENTIRE LOAD, EVEN AND ODD OSCILLATOR EQUIPMENT ARRANGEMENTS ARE IDENTICAL.
2. DIRECT CURRENT SHOULD NOT BE USED TO TEST THIS CIRCUIT (EXCEPT RELAYS) BECAUSE THE APPARATUS MAY BE DAMAGED OR ITS CHARACTERISTICS PERMANENTLY ALTERED BY THE PASSAGE OF DIRECT CURRENT.

DP INCOMING SENDER CKT.	SD-68221-01,	ISS. 12
* MF CURRENT SUPPLY CKT.	SD-95391-01,	ISS. 12
MF INCOMING SENDER CKT.	SD-68222-01,	ISS. 12

MF CURRENT SUPPLY SENDERS AND KEYSETS

NO. 4A TOLL

3 SHEETS, SHEET 2

OS 224-1

BELL TELEPHONE LABORATORIES, INC.
PRINTED IN U. S. A.
ORDER AS BSP ITEM MP-11745

MP-11745 3 SHEETS, SHEET 3

ISSUE	1		
DATE	12-5-61	4-8-64	4-8-66

MF CURRENT SUPPLY
TRANSFER AND ALARM RELAYS

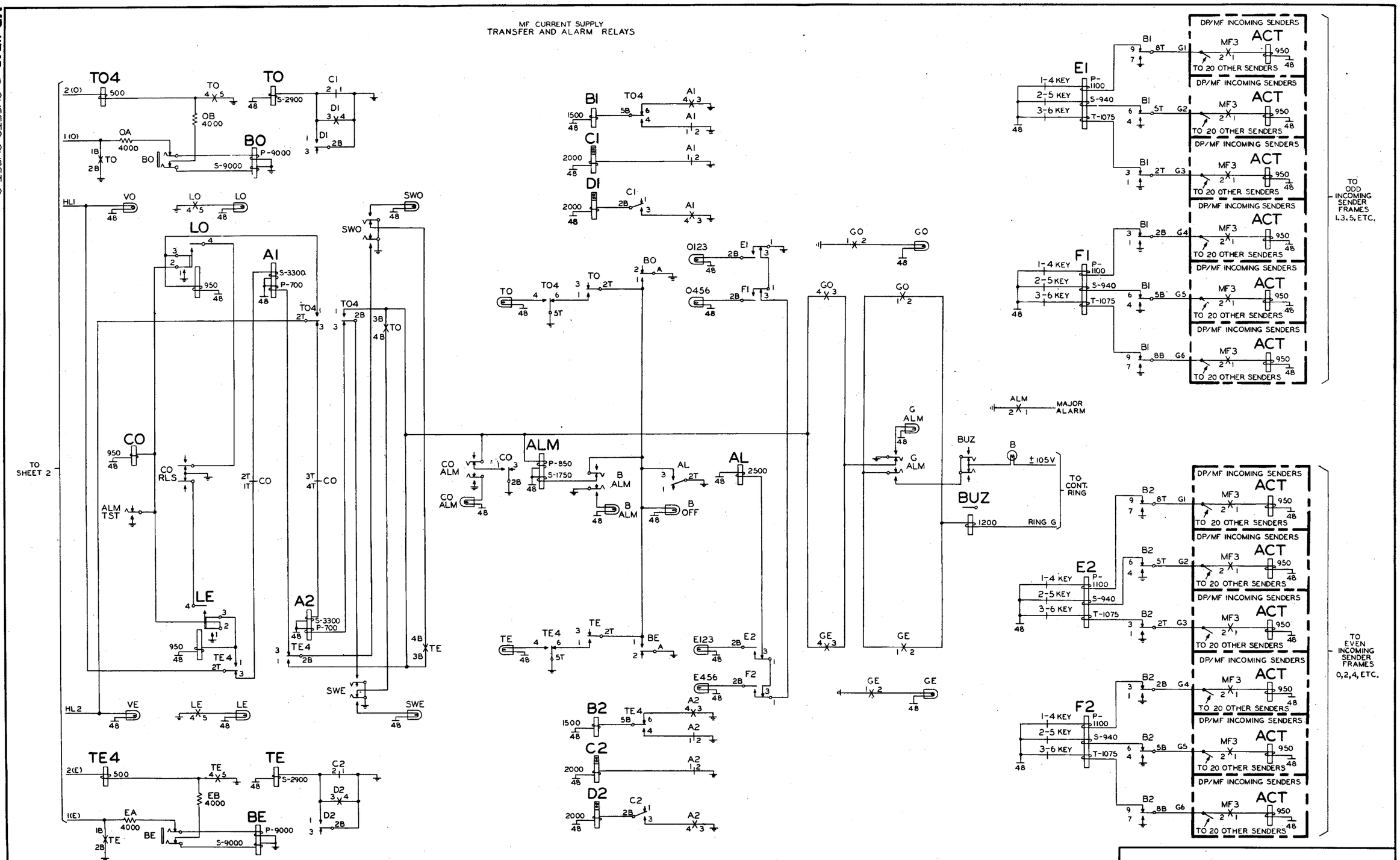

MF CURRENT SUPPLY
SENDERS AND KEYSETS

BELL TELEPHONE LABORATORIES, INC.

NO. 4A TOLL

3 SHEETS, SHEET 3

OS 224-1

PRINTED

ORDER AS BSP ITEM MP-11745

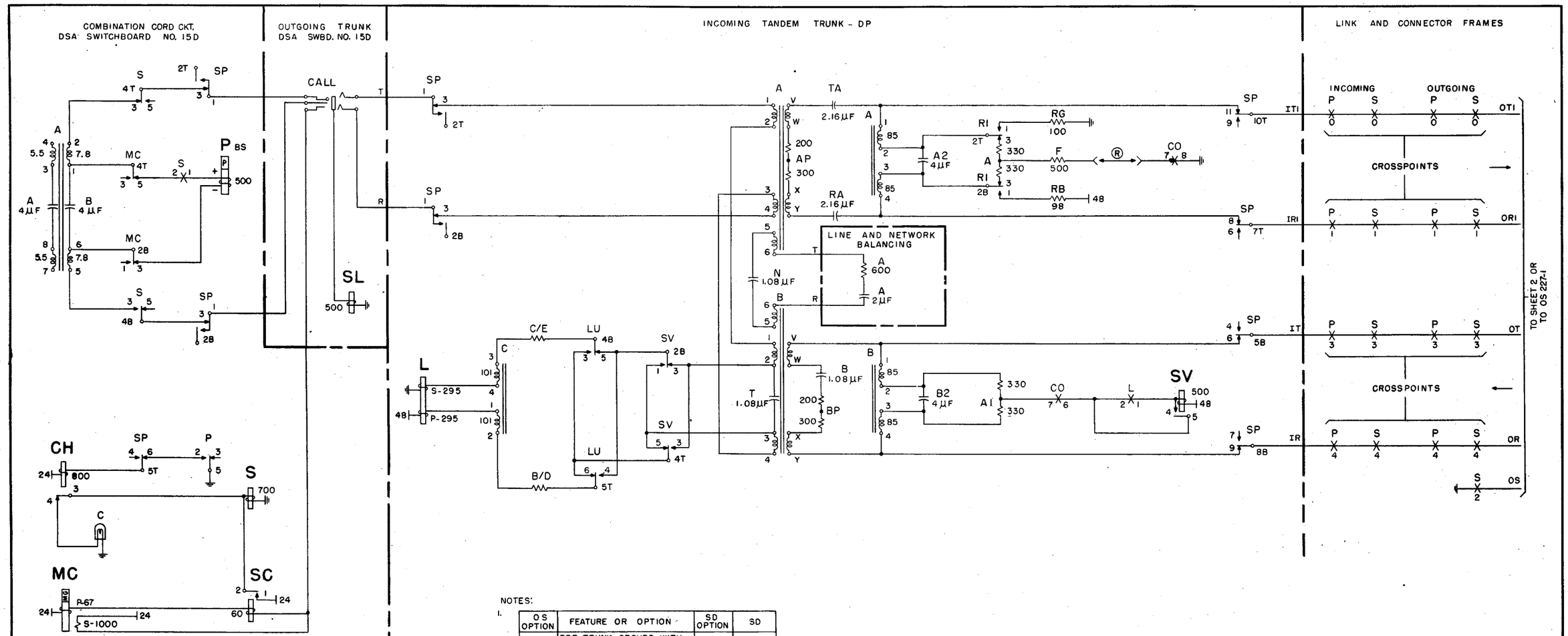

NOTES:

1.

OS OPTION	FEATURE OR OPTION	SD OPTION	SD
A	FOR TRUNK GROUPS WITH ASSOCIATED ROUTE RELAYS IN DECODER.	FIGS. 3, 4, 5	68420-01
B	FOR TRUNK GROUPS WITHOUT ASSOCIATED ROUTE RELAYS IN DECODER.	FIG. 6	68420-01
R	TO CUT OUT "A" PAD ASSOCIATED WITH CONNECTED I.T. TRUNK.	R	68315-01
X	REORDER FLASHING ONLY.	X	68420-01
Y	REORDER AND OVERFLOW FLASHING.	Y	68420-01

2. SEE OS 227-1

CORD CKT. DSA SWITCHBOARD	SD-96131-01, ISS. 13
DELAY QUOTATION TRUNK CKT.	SD-68056-01, ISS. 6
GROUP BUSY CHAIN RELAY CKT., OVERFLOW TRUNK CKT. AND OVERFLOW TRUNK CONTROL CKT.	SD-68420-01, ISS. 2
INCOMING LINK AND CONNECTOR CKT.	SD-68020-01, ISS. 12
INCOMING TANDEM TRUNK CKT.-DP	SD-68315-01, ISS. 6
INTERRUPTER FRAME CKT.	SD-68058-01, ISS. 15
LINE AND NETWORK BALANCING CKT.	SD-90517-01, ISS. 13
MISC. CKT. TRAFFIC SUPV. CABINET	SD-68195-01, ISS. 5
NO.5 BOARD JACK CKT.	SD-68053-01, ISS. 6
NO.5 BOARD OVERFLOW IND. CD. CKT.	SD-68055-01, ISS. 6
OUTGOING LINK AND CONNECTOR CKT.	SD-68022-01, ISS. 14
OUTGOING TRUNK CKT.—DSA SWBD.	SD-96164-01, ISS. 10

NO. 5 SWITCHBOARD
OVERFLOW TRUNK OPERATION AND DELAY QUOTATION

OS 226-1 3 SHEETS, SHEET 1

NO. 4A TOLL

ORDER AS BSP ITEM MP-11746

BELL TELEPHONE LABORATORIES, INC.

PRINTED IN U. S. A.

MP-11746

3 SHEETS, SHEET 1

ISSUE	1	J.E.K. J.E.B.
DATE		12-5-61

MP-11746 3 SHEETS, SHEET 2

ISSUE		
DATE	1	A.E.K. R.B.K.
12-5-47		

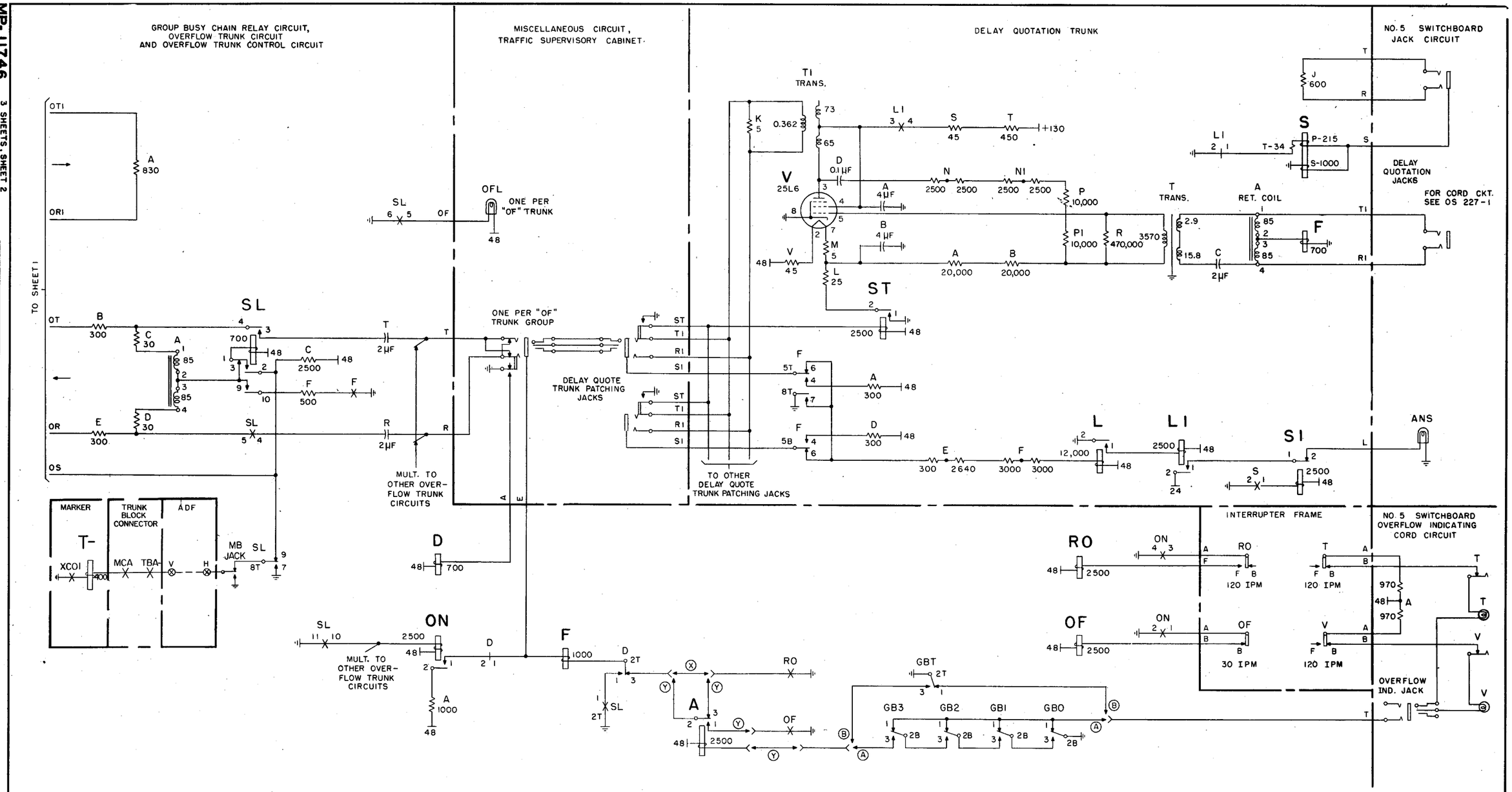

NO. 5 SWITCHBOARD

OVERFLOW TRUNK OPERATION & DELAY QUOTATION

NO. 4A TOLL

3 SHEETS, SHEET 2

OS 226-1

BELL TELEPHONE LABORATORIES, INC.
PRINTED IN U. S. A.
ORDER AS BSP ITEM MP-11746

MP-11746 3 SHEETS, SHEET 3

ISSUE	1	2	3
DATE	12-6-61	2-8-62	

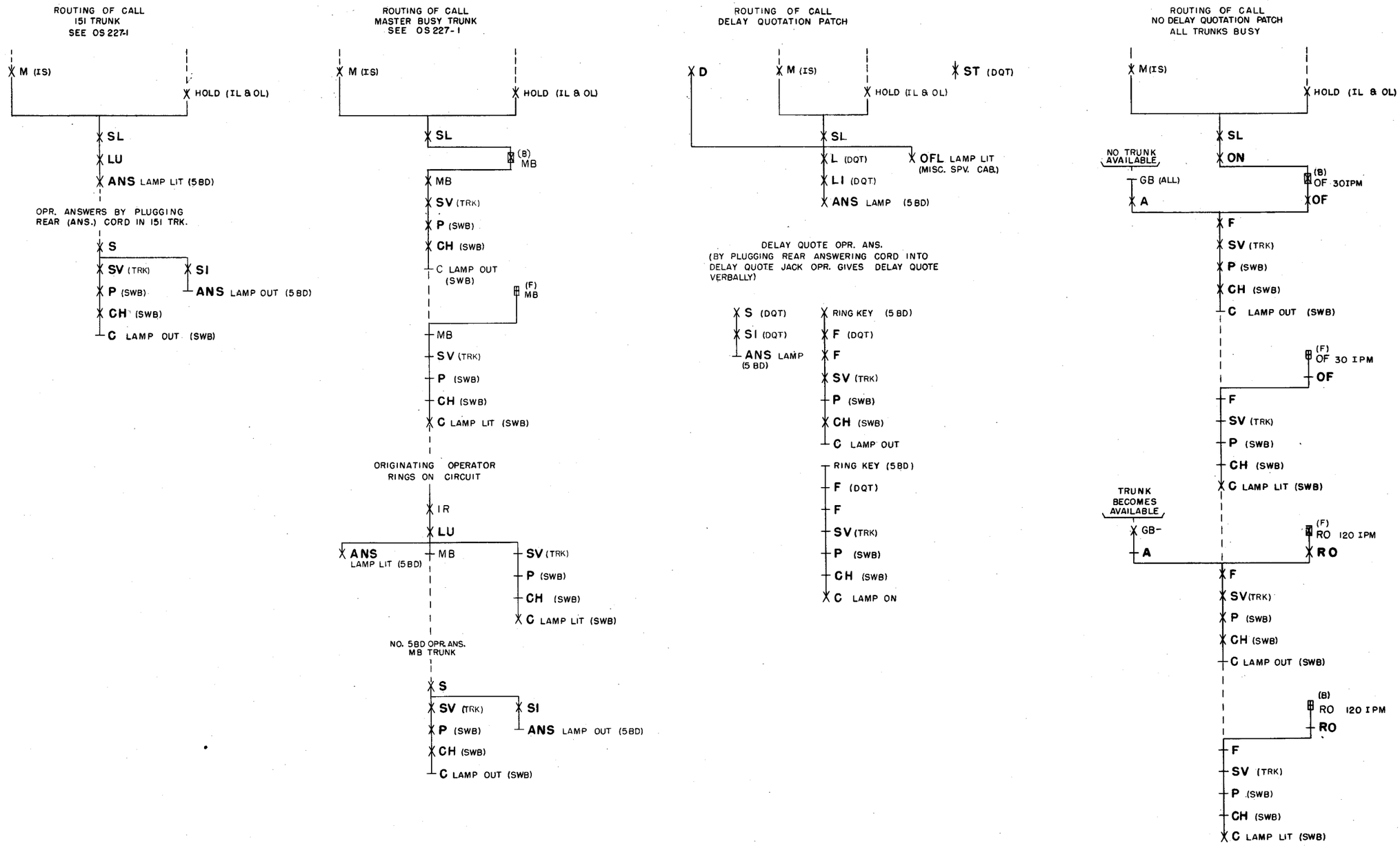

NO. 5 SWITCHBOARD
OVERFLOW TRUNK OPERATION & DELAY QUOTATION

NO. 4A TOLL

3 SHEETS, SHEET 3

OS 226-1

BELL TELEPHONE LABORATORIES, INC.
PRINTED IN U. S. A.
ORDER AS BSP ITEM MP- 11746

MP-11747

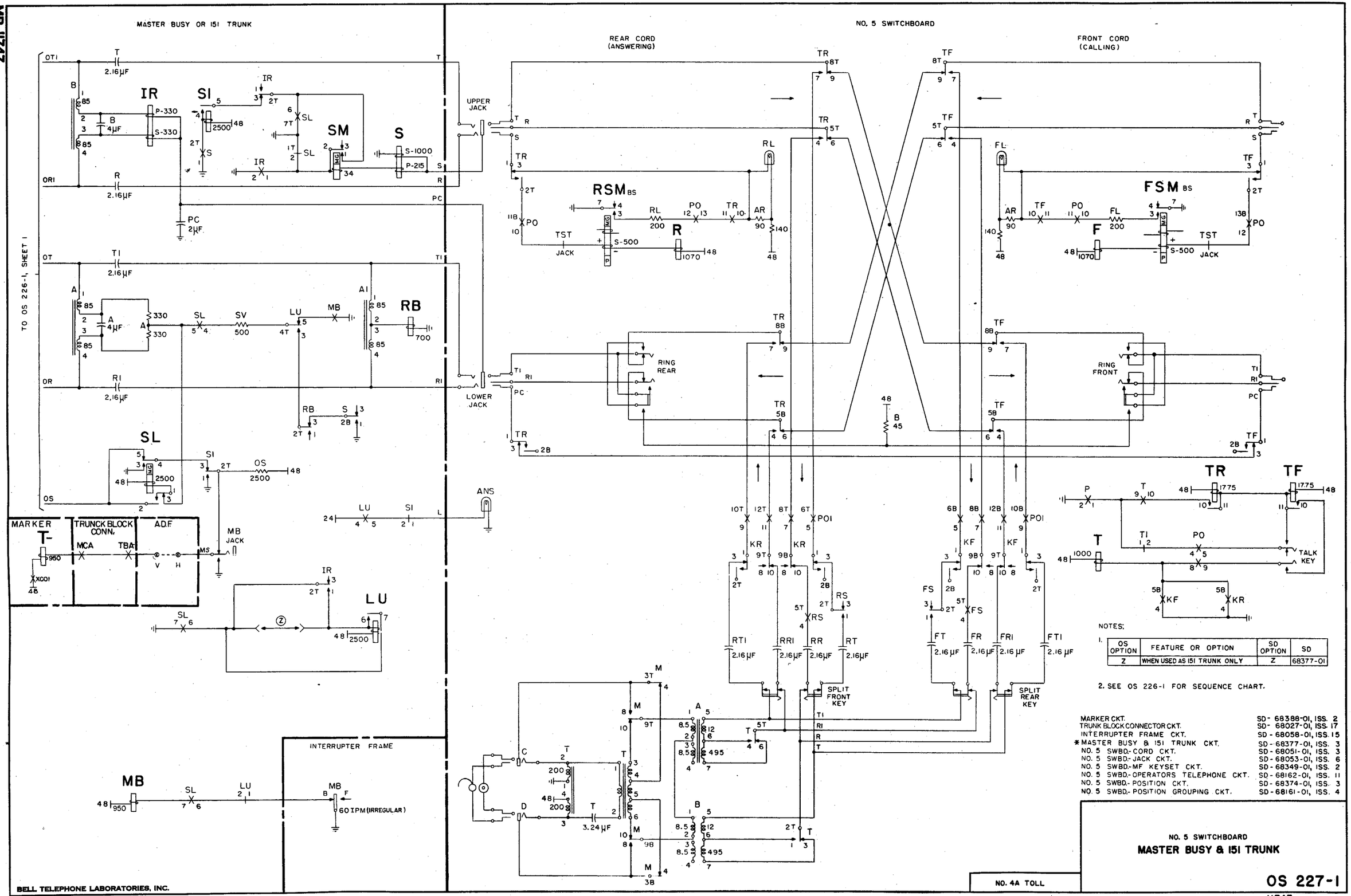

OS OPTION	FEATURE OR OPTION	SD OPTION	SD
Z	WHEN USED AS 151 TRUNK ONLY	Z	68377-01

ISSUE	DATE
1	12-8-51

BELL TELEPHONE LABORATORIES, INC.

PRINTED IN U. S. A.

ORDER AS BSP ITEM MP-11747

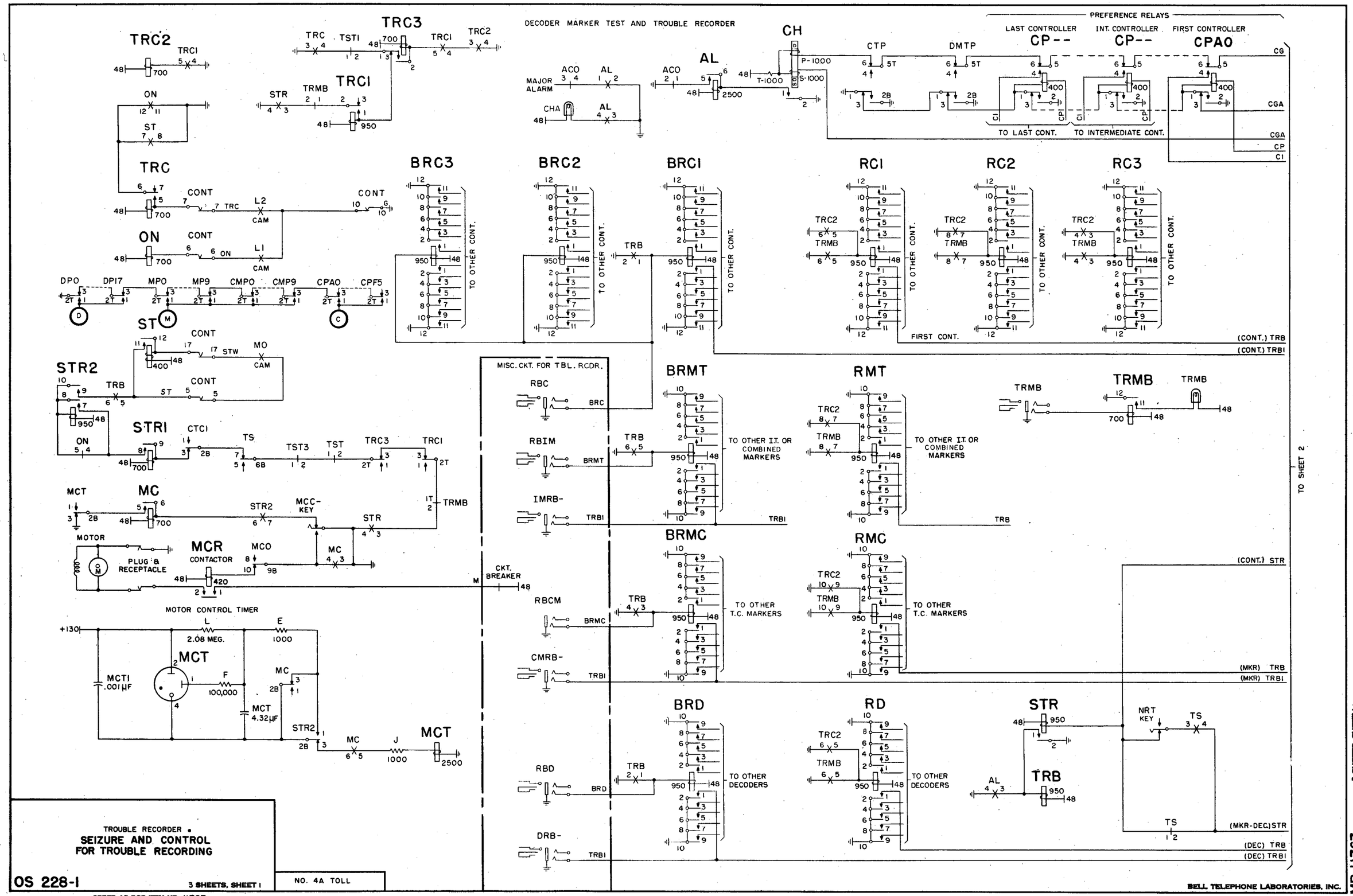

TROUBLE RECORDER •
SEIZURE AND CONTROL FOR TROUBLE RECORDING

OS 228-1

3 SHEETS, SHEET 1

NO. 4A TOLL

ORDER AS BSP ITEM MP-11767

BELL TELEPHONE LABORATORIES, INC.

PRINTED IN U. S. A.

MP-11767

3 SHEETS, SHEET 1

ISSUE	1	A.S.P. R.E.D.
DATE		1-16-52

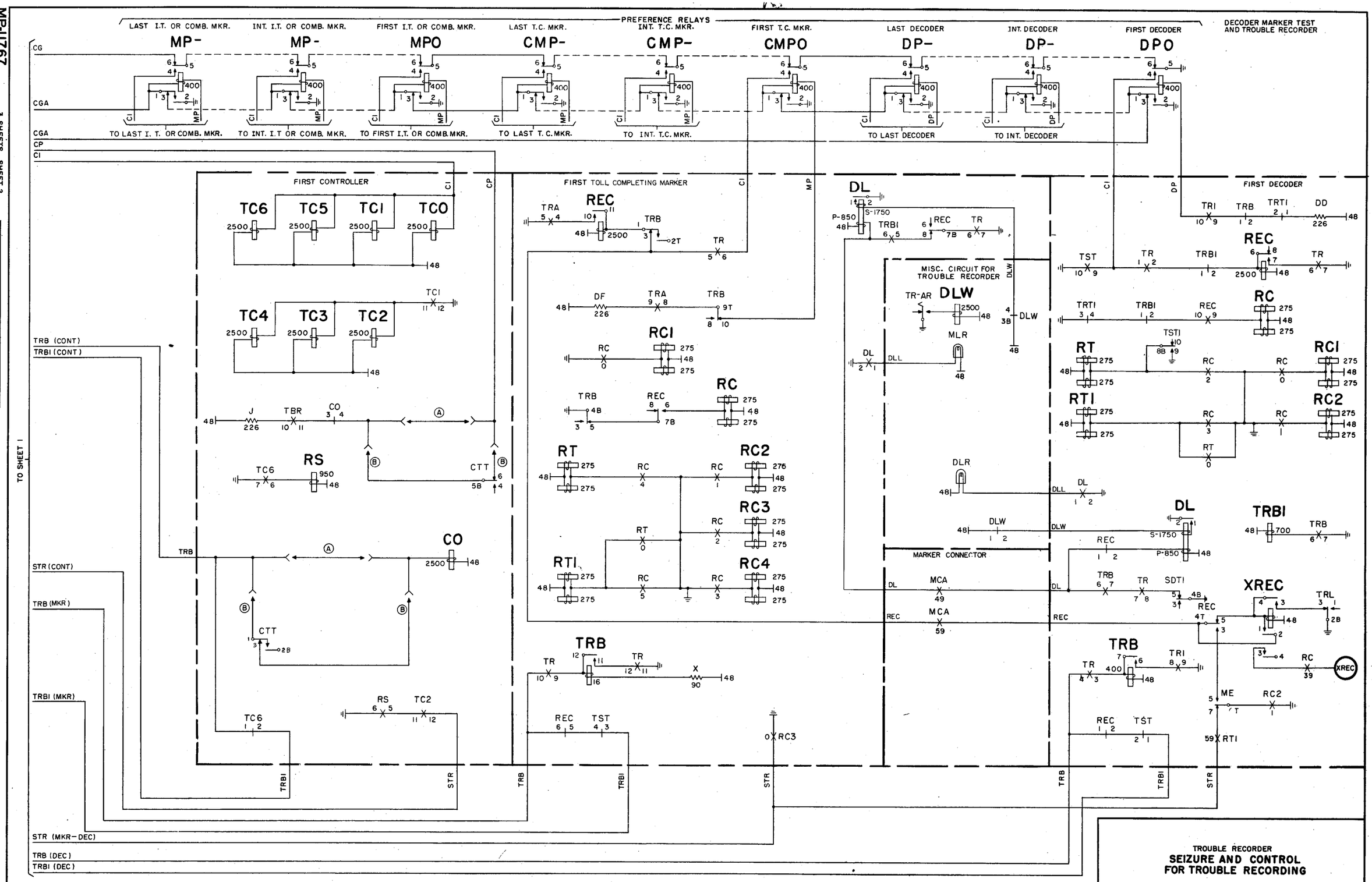
MP-11767
3 SHEETS, SHEET 2
ISSUE 1 A.S.N.
DATE 1-18-52
PREFERENCE RELAYS
LAST I.T. OR COMB. MKR.
INT. I.T. OR COMB. MKR.
FIRST I.T. OR COMB. MKR.
LAST T.C. MKR.
INT. T.C. MKR.
FIRST T.C. MKR.
LAST DECODER
INT. DECODER
FIRST DECODER
DECODER MARKER TEST AND TROUBLE RECORDER
MP-
MP-
MPO
CMP-
CMP-
CMPO
DP-
DP-
DPO
TO LAST I. T. OR COMB. MKR.
TO INT. I.T OR COMB. MKR.
TO FIRST I.T. OR COMB. MKR.
TO LAST T. C. MKR.
TO INT. T.C. MKR.
TO LAST DECODER
TO INT. DECODER
CG
CGA
CP
CI
FIRST CONTROLLER
TC6
TC5
TC1
TC0
TC4
TC3
TC2
RS
CO
CTT
FIRST TOLL COMPLETING MARKER
REC
RC1
RC
RT
RTI
RC2
RC3
RC4
TRB
DL
S-1750
P-850
MISC. CIRCUIT FOR TROUBLE RECORDER
TR-AR
DLW
MLR
DLR
MARKER CONNECTOR
MCA
FIRST DECODER
TRI
TRB
TRTI
DD
TST
TRBI
TSTI
SDTI
XREC
TRL
ME
TO SHEET 1
TRB (CONT)
TRBI (CONT)
STR (CONT)
TRB (MKR)
TRBI (MKR)
STR (MKR-DEC)
TRB (DEC)
TRBI (DEC)
TROUBLE RECORDER
SEIZURE AND CONTROL
FOR TROUBLE RECORDING
NO. 4A TOLL
3 SHEETS, SHEET 2
OS 228-1
BELL TELEPHONE LABORATORIES, INC.
PRINTED IN U. S. A.
ORDER AS BSP ITEM MP-11767

ISSUE	1	1
DATE	1-18-52	

SEQUENCE CHART

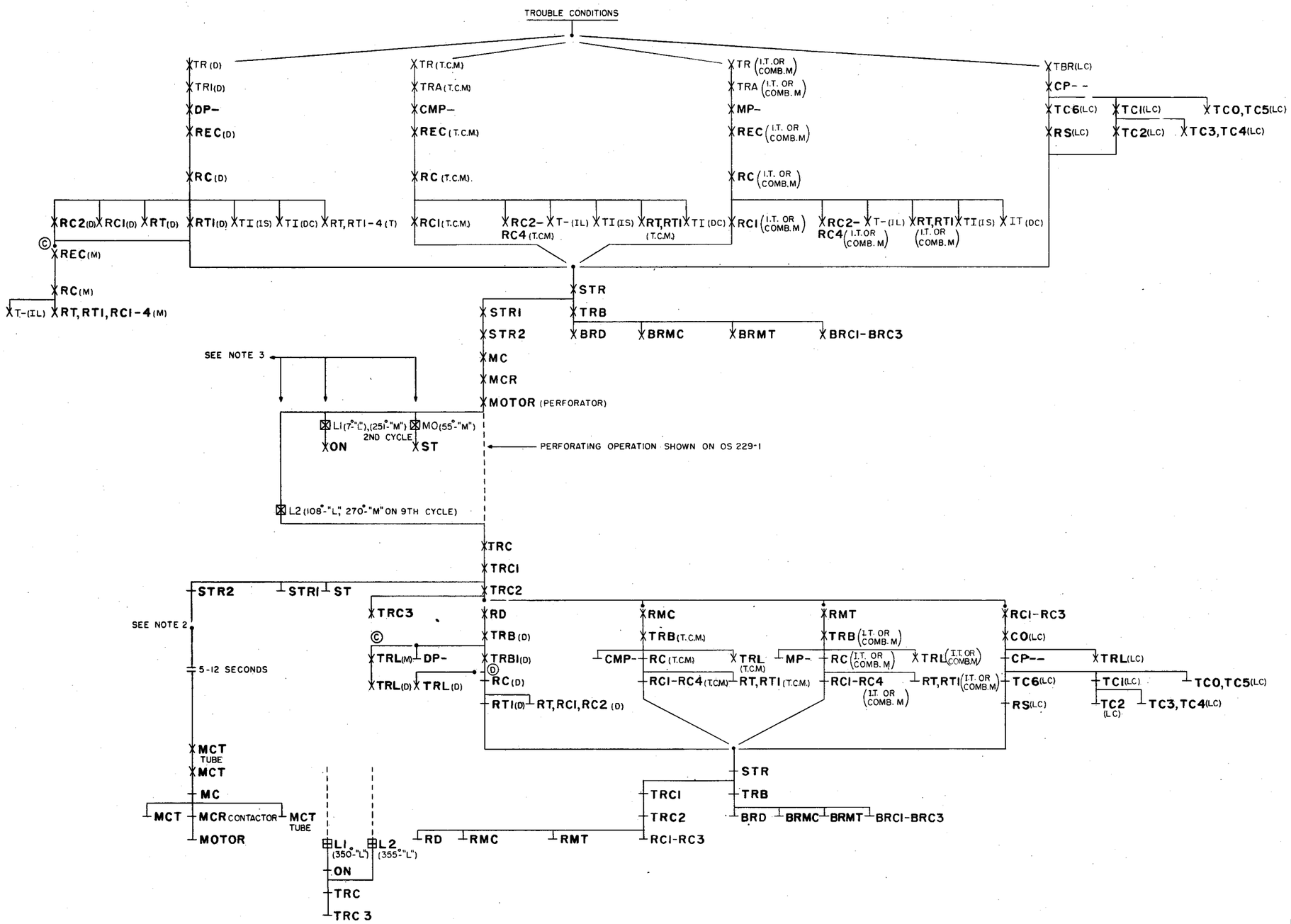

NOTES:

1.

OS OPTION	FEATURE OR OPTION	SD OPTION	SD
A	CONT. TEST CKT. IS NOT PROVIDED	YD	68028-01
B	CONT TEST CKT. IS PROVIDED	YC	
C	WHEN MARKER IS ATTACHED	NONE	68340-01
D	WHEN MARKER IS NOT ATTACHED	NONE	

2 IF THE RECORDER IS RESEIZED IN LESS THAN 5 SECONDS AFTER RELEASE OF STR2, THAT RELAY WILL REOPERATE AND PREVENT THE MOTOR FROM STOPPING.

3 "M" SHAFT MAKES 1 REVOLUTION PER PERFORATING CYCLE (9 CYCLES).
"L" SHAFT MAKES 1 REVOLUTION PER CARD.

DECODER CKT.	SD-68340-01, ISS. 2
*DECODER MARKER TEST AND TROUBLE RECORDER CKT.	SD-68389-01, ISS. 3
LINK CONTROLLER CKT.	SD-68028-01, ISS.24
MARKER CKT.	SD-68388-01, ISS. 2
MARKER CONNECTOR CKT.	SD-68395-01, ISS. 3
MISC. CKT. FOR TRBL. REC. FR.	SD-68392-01, ISS. 3

TROUBLE RECORDER
SEIZURE AND CONTROL FOR TROUBLE RECORDING

NO. 4A TOLL

3 SHEETS, SHEET 3

OS 228-1

BELL TELEPHONE LABORATORIES, INC.
PRINTED IN U. S. A.
ORDER AS BSP ITEM MP-11767

MP-11770

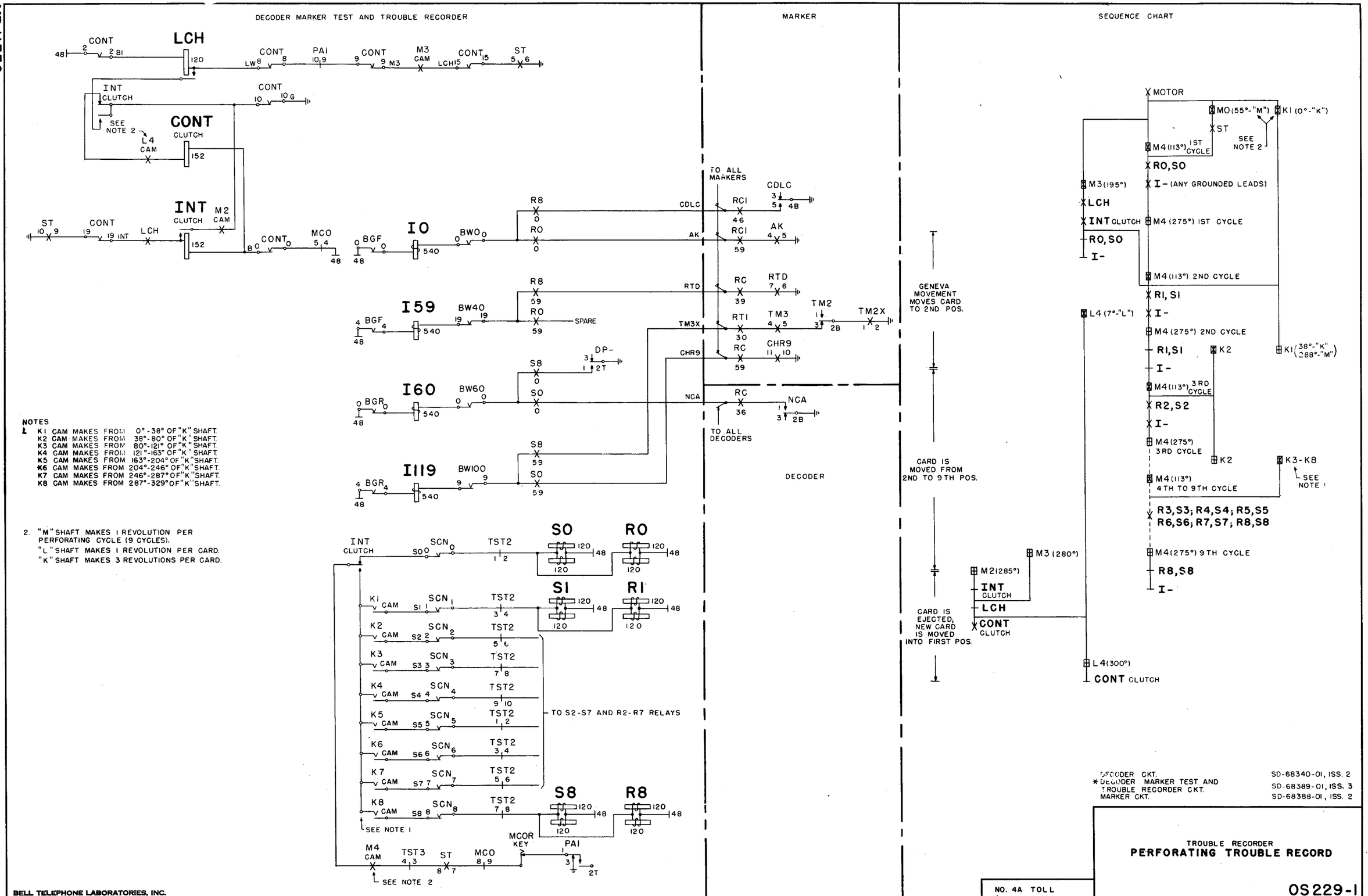

NOTES

1. K1 CAM MAKES FROM 0°-38° OF "K" SHAFT.
   K2 CAM MAKES FROM 38°-80° OF "K" SHAFT.
   K3 CAM MAKES FROM 80°-121° OF "K" SHAFT.
   K4 CAM MAKES FROM 121°-163° OF "K" SHAFT.
   K5 CAM MAKES FROM 163°-204° OF "K" SHAFT.
   K6 CAM MAKES FROM 204°-246° OF "K" SHAFT.
   K7 CAM MAKES FROM 246°-287° OF "K" SHAFT.
   K8 CAM MAKES FROM 287°-329° OF "K" SHAFT.

2. "M" SHAFT MAKES 1 REVOLUTION PER PERFORATING CYCLE (9 CYCLES).
   "L" SHAFT MAKES 1 REVOLUTION PER CARD.
   "K" SHAFT MAKES 3 REVOLUTIONS PER CARD.

ISSUE	DATE
1	1-18-52

DECODER CKT. SD-68340-01, ISS. 2
*DECODER MARKER TEST AND TROUBLE RECORDER CKT. SD-68389-01, ISS. 3
MARKER CKT. SD-68388-01, ISS. 2

TROUBLE RECORDER
PERFORATING TROUBLE RECORD

NO. 4A TOLL

OS229-1

BELL TELEPHONE LABORATORIES, INC.
PRINTED IN U. S. A.
ORDER AS BSP ITEM MP-11770

MP-11773

ISSUE	1	WAD
DATE	1-18-52	

R.B.B.

SD-12900-01
TYPE E TRUNK EQUIPMENT
INCOMING TRUNK CIRCUIT

DESIG.	OS
A	148-1, 150-1, 152-1
BR	
C	
C1	
GC	
I	
L	
L1	
LS	
R	
RC	
RP	
RV	
S	
SL	
ST	
TP	

SD-21115-01
INCOMING SELECTOR CIRCUIT

DESIG.	OS
A	
D	
L	148-1, 152-1, 153-1
R	
RS	
T	
TC	
TD	
TM	
TS	

SD-25302-01
INCOMING TRUNK CIRCUIT

DESIG.	OS
A	148-1, 152-1, 153-1
CN	
D	
D1	
F	
F1	
MC	
PU	
R	
R1-3	
RA	
RB	
RC	
RM	
RP	
RS	
RV	
T	
TC	

SD-30228-01
CONNECTOR CIRCUIT
COMBINATION TOLL AND LOCAL

DESIG.	OS
A	127-1, 139-1, 221-1
B	
C	
D	
E	
F	221-1
G	
H	127-1, 139-1, 221-1
J	
K	

SD-31681-01
INTERTOLL TRANSMISSION
SELECTOR CIRCUIT

DESIG.	OS
A	127-1, 139-1, 221-1
B	
C	
D	
E	
F	
G	
H	
K	
S	
T	127-1
Y	221-1

SD-31841-01
TOLL TRANSMISSION
SELECTOR CIRCUIT

DESIG.	OS
A	127-1, 139-1
B	
C	
D	
E	
F	
G	
H	
J	
K	
M	
P	
R	
T	139-1
Y	

INDEX OF RELAYS, ETC. ON SD'S & OS'S
SD-12900-01, ISSUE 19
SD-21115-01, ISSUE 24
SD-25302-01, ISSUE 20
SD-30228-01, ISSUE 25
SD-31681-01, ISSUE 8
SD-31841-01, ISSUE 6
RM 1-1

NO. 4A TOLL

MP-11773

SD-12900-01
TYPE E TRUNK EQUIPMENT
INCOMING TRUNK CIRCUIT

DESIG.	OS
A	148-1, 150-1, 152-1
BR	
C	
C1	
GC	
I	
L	
L1	
LS	
R	
RC	
RP	
RV	
S	
SL	
ST	
TP	

SD-21115-01
INCOMING SELECTOR CIRCUIT

DESIG.	OS
A	
D	
L	148-1, 152-1, 153-1
R	
RS	
T	
TC	
TD	
TM	
TS	

SD-25302-01
INCOMING TRUNK CIRCUIT

DESIG.	OS
A	148-1, 152-1, 153-1
CN	
D	
D1	
F	
F1	
MC	
PU	
R	
R1-3	
RA	
RB	
RC	
RM	
RP	
RS	
RV	
T	
TC	

SD-30228-01
CONNECTOR CIRCUIT
COMBINATION TOLL AND LOCAL

DESIG.	OS
A	127-1, 139-1, 221-1
B	
C	
D	
E	
F	221-1
G	
H	127-1, 139-1, 221-1
J	
K	

SD-31681-01
INTERTOLL TRANSMISSION
SELECTOR CIRCUIT

DESIG.	OS
A	127-1, 139-1, 221-1
B	
C	
D	
E	
F	
G	
H	
K	
S	
T	127-1
Y	221-1

SD-31841-01
TOLL TRANSMISSION
SELECTOR CIRCUIT

DESIG.	OS
A	127-1, 139-1
B	
C	
D	
E	
F	
G	
H	
J	
K	
M	
P	
R	
T	139-1
Y	

ISSUE	1	WAD
DATE	1-18-52	

R.B.B.

INDEX OF RELAYS, ETC. ON SD'S & OS'S
SD-12900-01, ISSUE 19
SD-21115-01, ISSUE 24
SD-25302-01, ISSUE 20
SD-30228-01, ISSUE 25
SD-31681-01, ISSUE 8
SD-31841-01, ISSUE 6

RM 1-1

NO. 4A TOLL

MP-11774

ISSUE	1	WAD
DATE	1-18-52	

R.B.B.

SD-55392-01
1000- CYCLE SIGNAL RECEIVING CIRCUIT

DESIG.	OS
DC	222-1

SD-55393-01
CUT-OFF RELAY CIRCUIT FOR 1000- CYCLE SIGNAL RECEIVING CIRCUIT

DESIG.	OS
A	
CO	
N	
R	222-1
T	

SD-56202-01
1600- OR 2000- CYCLE SINGLE FREQUENCY SIGNALING CIRCUIT

DESIG.	OS
CO	
F	
GR	
HL	
M	
R	
RF	
RG	122-1, 222-1
RR	
S	
SR	
T	

SD-62614-01
RD INTERTOLL TRUNK CIRCUIT

DESIG.	OS
BS	222-1
I	222-1
IA	
LI	222-1
LU	222-1
O	222-1
OS	
R	222-1
RS	
S	222-1
SC	222-1
SF	222-1
T	
TBT	
TCO	
TS	

SD-62632-01
AUXILIARY INTERTOLL TRUNK AND SWITCHING TRANSMISSION PAD CIRCUIT

DESIG.	OS
D	
P	222-1
P1	222-1

SD-64590-01
TRUNK CIRCUIT INCOMING TO INTERTOLL SELECTOR CIRCUIT

DESIG.	OS
A	127-1, 139-1, 221-1
AN	221-1
B	
B1	
PC	221-1

INDEX OF RELAYS, ETC. ON SD'S & OS'S
SD-55392-01, ISSUE 13
SD-55393-01, ISSUE 13
SD-56202-01, ISSUE 6
SD-62614-01, ISSUE 31
SD-62632-01, ISSUE 24
SD-64590-01, ISSUE 9
RM 1-2

BELL TELEPHONE LABORATORIES, INC.

NO. 4A TOLL

PRINTED IN U.S.A.

ORDER AS BSP ITEM MP- 11774

SD-68018-01

OUTGOING SENDER CIRCUIT - REVERTIVE AND PCI

DESIG.	LOCATION OS	LOCATION SD
0-6	149-1	J5-
1'-6'	149-1	I5-
AR	154-1, 154-2	A40, D40, A34
AV	149-1, 150-1, 151-1, 153-1	G9
AV1	149-1, 152-1, 153-1	F5
AV2	152-1, 153-1	F5
BO'	149-1, 152-1, 153-1	I9
CH	154-1	A41
CI	146-1	E29
CI1, 2	148-1	I29
CI3	148-1	A25
CIA	146-1	B30
CLA	146-1	D28
CLB	146-1	E27
CLF	153-1	E26
CLK	146-1	D27
CO	146-1	E28
CP	149-1	E7
CR	146-1	G29
CT	152-1	B28
CTR	154-1, 154-2	A42, E42
DR	129-1, 141-1, 147-1	I24
DT	146-1	F34
FC	147-1	K15
FL	147-1	K16
FO'	149-1, 152-1, 153-1	I9
FO1-3	152-1	G7-

DESIG.	LOCATION OS	LOCATION SD
FP	150-1, 151-1	J24
FS	148-1	F4
GCO	146-1	H29
GR	150-1	J25
H	151-1	E19
H'	151-1	E18
H1, 2, 4, 5	147-1	F11-
HC	147-1	E15
HL	147-1	E17
HLA	147-1	B29
HSS	154-2	A36, E41
IA	149-1, 153-1	F6
IG	147-1	D15
KC1	129-1, 141-1, 147-1	H25
KKC	147-1, 153-1	B24
KR	147-1, 153-1	H24
KR1	147-1, 153-1	H24
LR	146-1	B29
MB	114-1, 154-1, 154-2	A22
O	152-1, 153-1	J9
O5	146-1	G29
OF	148-1, 149-1, 152-1, 153-1	F7
OF1-3	149-1, 152-1, 153-1	G4-
ON	146-1	E22
ON1, 2	146-1	B28-
ONA	146-1	B26

DESIG.	LOCATION OS	LOCATION SD
OT	151-1	E16
OT1	151-1	K15
OT2	147-1	K16
PC	147-1	H22
PC1	147-1	H22
PG	150-1	I26
PG1-3	150-1	I24-
PR	151-1	J27
PS	150-1	I27
PT	151-1	J26
PX	146-1	G28
R	152-1, 153-1	J3
RC	149-1	J10
RC0-2	152-1, 153-1	I3
RCA	146-1	D29
RM	146-1, 147-1	G25
RO	153-1, 154-1, 154-2	B27
RP	146-1, 147-1	G26
RPT	153-1	E25
RS	146-1, 147-1	G26
S	106-1, 112-1, 112-2, 146-1	D22
S1-6	149-1	B5-
S1'-6'	149-1	D5-
SA	153-1	E23
SB	146-1	C22
SP	146-1	D24
SP1, 2	129-1, 141-1	D23
SPA	146-1	D26
SPK	146-1	D25
SSR	154-1, 154-2	A23
ST	147-1	E24

DESIG.	LOCATION OS	LOCATION SD
ST1, 2, 4, 5	147-1	I12-
STA	151-1	C19
STA'	151-1	C18
STB	151-1	I19
STB'	151-1	I18
STC	147-1	I15
STD	151-1	J14
STE	151-1	K12
STF	151-1	K14
STL	147-1	I17
STP	149-1, 152-1, 153-1	F8
T	151-1	G19
T'	151-1	G18
T1, 2, 4, 5	147-1	G12-
TC	147-1	G15
TG	148-1	F9
TG1-3	148-1	B27 I28
TH	151-1	D19
TH'	151-1	D18
TH1, 2, 4, 5	147-1	C12-
TH1', 2', 4', 5'	147-1	D12-
THC	146-1, 147-1	B15
THE	151-1	E11
THF	151-1	D17
THL	146-1, 147-1	B17
TL	147-1	G17
TM	129-1, 141-1, 146-1, 147-1	G24
TM1-10	154-1, 154-2	A24-
TP	129-1, 141-1 146-1, 147-1	G23

ISSUE	1	WAD	2	[illegible]
DATE	1-18-52		12-22-53	

R.B.B.

2 SHEETS, SHEET 1

MP-11775

INDEX OF RELAYS, ETC. ON SD'S & OS'S
SD-68018-01, ISSUE 28

RM 1 - 3 2 SHEETS, SHEET 1

NO. 4A OR 4M TOLL

BELL TELEPHONE LABORATORIES, INC.

ORDER AS BSP ITEM MP-11775

PRINTED IN U.S.A.

MP-11775

2 SHEETS, SHEET 2

ISSUE	1	WAD	2	
DATE	1-18-52	12-22-53		

R.B.B.

SD-68018-01

OUTGOING SENDER CIRCUIT - REVERTIVE AND PCI

DESIG.	LOCATION OS	LOCATION SD
TR	146-1	G22
TS	129-1, 141-1, 146-1, 147-1	G23
TST		K8
TST1		K9
U	151-1	H19
U'	151-1	H18
U1,2,4,5	147-1	H12-
UC	147-1	H15
UL	147-1	H17
WA	154-1,154-2	B25
WA1	154-1,154-2	B26
XBR	146-1	G28

INDEX OF RELAYS, ETC. ON SD'S & OS'S

SD-68018-01, ISSUE 2 8

BELL TELEPHONE LABORATORIES, INC.

NO. 4A OR 4M TOLL

2 SHEETS, SHEET 2

RM 1 - 3

PRINTED IN U.S.A.

ORDER AS BSP ITEM MP- 11775

MP- 11776

ISSUE	1	WAD
DATE	1-18-52	

R.B.B.

SD-68020-01
INCOMING LINK AND CONNECTOR CIRCUIT

DESIG.	OS
SEE SD-68393-01, ISSUE 4	

SD-68022-01
OUTGOING LINK AND CONNECTOR CIRCUIT

DESIG.	OS
SEE SD-68394-01, ISSUE 3	

SD-68027-01
TRUNK BLOCK CONNECTOR CIRCUIT

DESIG.	OS
A	
AL	198-1
CB	198-1
CH	198-1
GC0,1	200-1
JB	
JH	
JH1	
JR	
MCA	198-1
MCB	198-1
MP	198-1, 218-1
R	
TBA0-9	199-1
TBB0-9	199-1

INDEX OF RELAYS, ETC. ON SD'S & OS'S
SD-68020-01, ISSUE 12
SD-68022-01, ISSUE 13
SD-68027-01, ISSUE 16

RM 1 - 4

NO. 4A TOLL

MP- 11777

SD-68028-01

LINK CONTROLLER CIRCUIT

DESIG.	OS
A	109-1, 109-2
AA	109-1, 109-2
AL1	115-1
AP	104-1
AR	105-1
AR1	105-1
AS	107-1, 107-2
AT	109-1, 109-2
B	109-1, 109-2
BA	109-1, 109-2
BP	104-1
BS	107-1, 107-2
BT0-5	108-1, 108-2
C	109-1, 109-2
CA	109-1, 109-2
CK	107-1, 107-2
CL	107-1, 107-2
CL0	107-1, 107-2
CO	228-1
CP	104-1
CT	104-1
CTT	
CTT1	
D	109-1, 109-2
DA	109-1, 109-2
DA1,2	103-1, 104-1
DA3	104-1
DG	113-1, 114-1
DG1	113-1
DL	107-1, 107-2
DP	104-1
DR	110-1, 113-1
DT(Tube)	109-1, 109-2
DTC, DTCA	109-1, 109-2
DU	107-1, 107-2

DESIG.	OS
E	109-1, 109-2
EA	109-1, 109-2
EP	104-1
FR1-4	113-1
G	105-1
G0-9	105-1
GE	105-1
GR	106-1
GX	105-1
GX1	105-1
HA	108-1, 108-2
HB	108-1, 108-2
HM	112-1, 112-2, 121-1, 134-1
HO	112-1, 112-2
HP	104-1
HT	108-1, 108-2
HX	108-1, 108-2
L	106-1, 112-1, 112-2
L0-9	106-1, 112-1, 112-2
LC	107-1, 107-2
LE	106-1
LM	111-1
LN	106-1, 112-1, 112-2
LR	113-1
MA	115-1
MB	103-1, 104-1, 113-1
MCB	104-1
NX	104-1, 113-1
OD	106-1
ON	104-1
OT	107-1, 107-2

DESIG.	OS
P	110-1
P0-5	104-1
PA	107-1, 107-2
PAO	110-1
PB	107-1, 107-2
PBO	110-1
PC	107-1, 107-2
PCA	
PG	107-1, 107-2
PR	
PSA	110-1
PSB	110-1
PU	115-1
PX	110-1
PX1	110-1
R1	112-1, 112-2
R2	107-1, 107-2
RC	109-1, 109-2
RL	107-1, 107-2
RP	
RP1	
RS	228-1
RT	104-1, 107-1, 107-2
SAO	111-1
SBO	111-1
SC	106-1, 112-1, 112-2, 121-1, 134-1, 146-1
SD, SD1	
SMO	110-1
SSA	110-1
SSB	110-1
ST	106-1
SX	111-1
SX1	111-1

DESIG.	OS
T	109-1, 109-2
T0-29	108-1, 108-2
TBR	113-1, 228-1
TC	108-1, 108-2
TC0-5	228-1
TC6	228-1
TE	107-1, 107-2
TR	104-1, 113-1
TR1-3	113-1
TR4	
TRC	107-1, 107-2
TRL	115-1, 228-1
TST	109-1, 109-2
TT	113-1
TT(Tube)	113-1
UC	107-1, 107-2
UM	111-1

ISSUE	1	WAD
DATE	1-18-52	R.B.B.

INDEX OF RELAYS, ETC. ON SD'S & OS'S

SD-68028-01, ISSUE 24

NO. 4A TOLL

RM 1-5

MP- 11778

ISSUE	1	WAD
DATE	1-18-52	R.B.B.

SD-68056-01
DELAY QUOTATION TRUNK CIRCUIT
TOLL SWITCHBOARD NO. 5

DESIG.	OS
F	226-1
L	226-1
L1	226-1
S	226-1
S1	226-1
ST	226-1

SD-68060-01
TRAFFIC REGISTER CIRCUIT

DESIG.	OS
A	113-1, 153-1
A1	113-1
AL	113-1, 114-1
ALM	113-1
B	
B1	113-1
C	
D	
DA(M.R.)	
DL(M.R.)	113-1
F	
G	
GB(M.R.)	114-1
GBT(M.R.)	
H	

SD-68060-01(CONTD.)
TRAFFIC REGISTER CIRCUIT

DESIG.	OS
J	
K	
L	
LD	
LD(M.R.)	
M	
N	114-1
OFL(M.R.)	
P	114-1
PC(M.R.)	
PC(KS-7495 MAG. COUNTER)	
PD(M.R.)	153-1
PH	113-1
PS(M.R.)	
R(M.R.)	
SGB	114-1
TC	
TC(M.R.)	
TD	
W	113-1
Z	113-1

SD-68119-01
FRAME IDENTIFICATION
FREQUENCY SUPPLY CIRCUIT

DESIG.	OS
0-9	
A	223-1
A1-2	223-1
AA	223-1
AF	223-1
AL	223-1
AM	223-1
AT	223-1
AT(MAG.)	
AT1-3	
AT1(MAG.)	
B1-4	
BC0,1(Fig.19)	223-1
C0-4	
CK	
CK(MAG.)	
CK1,2	
E1,2	223-1
ET	223-1
F1-4	
ITI0-3	223-1
ITO0-3	223-1
MK	206-1, 223-1
MK1	223-1
PF	223-1
R	223-1

SD-68119-01(CONTD.)
FRAME IDENTIFICATION
FREQUENCY SUPPLY CIRCUIT

DESIG.	OS
R1,2	223-1
RA	223-1
RL	223-1
SA	223-1
SR	223-1
SW	
SW1	
T	223-1
TCI0-3	
TCO0-3	
U	
U1,2	

INDEX OF RELAYS, ETC. ON SD'S & OS'S
SD-68056-01, ISSUE 6
SD-68060-01, ISSUE 23
SD-68119-01, ISSUE 14
RM 1-6

BELL TELEPHONE LABORATORIES, INC.

NO. 4A TOLL

ORDER AS BSP ITEM MP- 11778

SD-68221-01

DIAL PULSE INCOMING SENDER CIRCUIT

DESIG.	LOCATION OS	LOCATION SD
5BD	121-1	D44
6DT	167-1	G32
20C	193-1	A88
20C1	131-1, 143-1	C89
A $\frac{2}{5}$	123-1	D52-
ACT	130-1, 224-1	F97
ADR	123-1	C32
AS	123-1	B52
ASO	126-1	C73
AV	126-1	E35
AV1	126-1	E35
B $\frac{2}{5}$	123-1	D52-
BD	125-1	C97
BS	123-1	B52
BSO	126-1	C74
C $\frac{2}{5}$	123-1	D53-
CA	125-1	A61
CA1	125-1	B61
CA4-6	124-1, 158-1	E33-
CA4A, 5A	124-1	G33-
CB	125-1	A62
CB1	125-1	B62
CC	125-1	A63

DESIG.	LOCATION OS	LOCATION SD
CC1	125-1	B63
CD	125-1	A65
CD1	125-1	B65
CE	125-1	A66
CE1	125-1	B66
CF	125-1	A66
CF1	125-1	B66
CH	132-1	C46
CH $\frac{2}{5}$	195-1	E61-
CM	121-1	B44
CP	121-1	B44
CRS	121-1	A44
CS	123-1	B53
CSO	126-1	C74
CT $\frac{2}{5}$	195-1	E62-
CTA	132-1, 132-2	D48
CTR	132-1, 132-2	E48
CTS	121-1	A44
CU $\frac{2}{5}$	195-1	E63-
CX	121-1	E38
D $\frac{2}{5}$	123-1	D54-
DC	193-1	B81
DC1, 2	130-1	G74-
DDR	123-1	C33
DE1, 2	125-1	D104-

DESIG.	LOCATION OS	LOCATION SD
DLC	193-1	C85
DP	125-1	F85
DP1	125-1	G76
DPS	194-1	A75
DRL	124-1, 158-1, 166-1	G103, G106
DRL1	121-1, 124-1	H102, H105
DS	123-1	B54
DSO	126-1	C75
DT		C121
E $\frac{2}{5}$	123-1	D55-
EDR	123-1	C33
EPS	194-1	A76
ES	123-1	B55
ESO	126-1	C76
EV	123-1	B51
EVO	126-1	C71
EX	123-1	B59
EX1	123-1	D59
F $\frac{2}{5}$	123-1	D55-
FDR	123-1	C34
FIF	132-1, 132-2, 178-1, 206-1	F47
FL	131-1	C95
FL1	131-1	E96
FP	126-1	F94
FPP	123-1	E38
FPS	194-1	A76
FS	123-1	B55
FSO	126-1	C76

DESIG.	LOCATION OS	LOCATION SD
FT	121-1	B45
FT1	121-1	C37
G $\frac{2}{5}$	123-1	D56-
GPS	194-1	A77
GS	123-1	B56
GSO	126-1	C77
H $\frac{2}{5}$	123-1	D56-
HPS	194-1	A77
HS	123-1	B56
HSO	126-1	C77
IS	133-1	F41, H41
IT(Tube)	133-1	F42, H42
ITC	133-1	G41, H41
J $\frac{2}{5}$	123-1	D57-
JPS	194-1	A78
JS	123-1	B57
JSO	126-1	C78
K $\frac{2}{5}$	123-1	D58
KD	129-1	B92
KP	125-1	F83
KS	123-1	B58
KSO	126-1	C78
L	123-1, 221-1, 222-1	B41
L $\frac{2}{5}$	123-1	D59-
LA-E	123-1	B41-

INDEX OF RELAYS, ETC. ON SD'S & OS'S
SD-68221-01, ISSUE 17

RM 1-7 2 SHEETS, SHEET 1

NO. 4A TOLL

BELL TELEPHONE LABORATORIES, INC.

ISSUE 2 GRS
DATE 10-5-63

2 SHEETS, SHEET 1

MP-11779

ORDER AS BSP ITEM MP-

PRINTED IN U.S.A.

ISSUE	GRS
2	

DATE 10-5-53

SD-68221-01

DIAL PULSE INCOMING SENDER CIRCUIT (CONT.)

DESIG.	LOCATION OS	LOCATION SD
LIT	121-1	D44
LP	121-1	E38
LPD	193-1	B84
LPS	194-1	A79
LR	123-1	E37
LS	123-1	B59
LSO	126-1	C79
LSS	131-1	B88
M	193-1	B80
MB	114-1	B34
ME	125-1, 132-1	E35
MF	193-1	B82
MF1-3	130-1	E83, F74-
MFT	128-1	D93
MRL	158-1, 178-1, 217-1	G104 H106
MRL1	178-1, 217-1	F32
MS	124-1, 132-1, 132-2	D31
MS1, 2	121-1, 124-1, 132-1, 132-2	C31-
MSO	126-1	C79
MT	216-1	E44
NSK	194-1	A67
NV	121-1	D44
NV1	121-1	D43
OD	123-1	B51
ODO	126-1	C80
OF	127-1, 128-1	C99
OF1	128-1, 131-1	C97
ON	121-1	G37
ON1	121-1	E37

DESIG.	LOCATION OS	LOCATION SD
OP	128-1, 129-1	C93
OP1, 2	128-1, 129-1	C94-
OSC	126-1	C80-
OT(Tube)	133-1	G123
OTC	133-1	G123
OTS	133-1	G123
P	125-1	B101
P1-6	123-1	A42-
P1A	123-1	A43
P6A	123-1	B42
PA	125-1	C103
PAO	126-1	C71
PB	125-1	C103
PBO	126-1	C72
PC	125-1	D107
PC1-6	125-1	A103-
PCK	125-1	A101
PCO	126-1	C73
PD	125-1	C104
PE	125-1	C104
PFX/PFXB	125-1	D78
PFX1/PFXA	125-1	C78
PFXC	125-1	B78
PG	125-1	E101 G101
PG1	125-1	C100
PP	126-1	C91
PP'	126-1	C90
PS	126-1, 129-1	F96
R	131-1	B89
R1	129-1	C93
RA	123-1	E41

DESIG.	LOCATION OS	LOCATION SD
RA1	121-1, 123-1	D40
RCG	132-1, 132-2	C48
RCT	128-1, 131-1, 132-2	B48
RO	132-1, 132-2	D46
ROR	128-1, 131-1	E47
RR $\frac{2}{5}$	125-1	G71-
RS	121-1	D45
RSS	132-2	C129
RT	121-1	C43
RT $\frac{2}{5}$	125-1	F71-
RTA	123-1	B43
S	106-1, 112-1, 112-2, 121-1	D36
S1	121-1	C36
SA	129-1	D92
SA1	129-1	E92
SAR		E81
SAR1, 2		F81
SG1, 2	131-1	C86-
SK3, 6	194-1	A61-
SL	127-1, 128-1, 129-1, 131-1	D93
SL1	128-1, 129-1	D92
SP	121-1, 221-1, 222-1	E36
SP1	121-1	D37
SR	123-1	A41
SR1	123-1	A41
SRM	132-2	C128
SST	127-1, 133-1	D31
SST1	127-1	C91
SXD	193-1	B83
SXR	193-1	A89

DESIG.	LOCATION OS	LOCATION SD
SXR1	131-1	C89
SY	126-1	F96
T1	129-1	C93
TC3, 5	125-1	E86
TCA	125-1	E85
TG	127-1, 128-1	C99
TG1	131-1	C98
TGT	131-1	E97
TGT1	131-1	E98
TI	178-1, 220-1	G121
TKS	125-1, 170-1, 172-1, 202-1	C87
TKS1, 2	125-1	D87-
TM0-6	132-2	E126
TM0-9	121-1, 132-1	A47-
TMA	132-2	E126
TMB	132-2	E126
TMR	132-2	E126
TMS	132-2	E126
TNI	114-1	G121
TR	132-2	C123
TRL	132-1, 132-2, 158-1, 178-1, 220-1	E33
TRM	121-1	C44
TRP	121-1	C44
TS	121-1	C45
TST		A35
TST1		A36
VO	121-1	D45
W	125-1	D104
WR	125-1	E103
XDD	193-1	C86
XSG	193-1	C87
Z	125-1	E103

INDEX OF RELAYS, ETC. ON SD'S & OS'S
SD-68221-01, ISSUE 17

2 SHEETS, SHEET 2

NO. 4A TOLL

RM 1-7

SD-68222-01

MF INCOMING SENDER CIRCUIT

DESIG.	LOCATION OS	LOCATION SD
5BD	134-1	F32
10A	135-1, 135-2	D41
20C	193-1	A78
20C1	143-1	C79
A 2/5	135-1, 135-2	E42-
ACT	142-1	F87
ADR	135-1, 135-2	C32
AS	135-1, 135-2	C42
ASO	138-1	B63
AV	138-1, 141-1	D33
AV1	138-1	D33
B 2/5	135-1, 135-2	E43-
BD	137-1	C87
BS	135-1, 135-2	C43
BSO	138-1	B64
C 2/5	135-1, 135-2	E43-
CA	137-1	A51
CA1	137-1	C51
CA4-6	136-1, 158-1	D30-
CA4A, 5A	136-1	E30-
CB	137-1	A52
CB1	137-1	C52
CC	137-1	A53
CC1	137-1	C53
CD	137-1	A54
CD1	137-1	C54
CE	137-1	A55
CE1	137-1	C55
CF	137-1	A56
CF1	137-1	C56
CH	144-1	B38
CH 2/5	195-1	F51-
CM	134-1	F37
CP	134-1	F37
CS	135-1, 135-2	C43
CSO	138-1	B64
CT 2/5	195-1	E52-
CTA	144-1, 144-2	B38
CTR	144-1, 144-2	C38
CTS	134-1	F36
CU 2/5	195-1	E53-
D 2/5	135-1, 135-2	E44-
DC	193-1	B71
DC1, 2	142-1	G56 G65
DDR	135-1, 135-2	C30
DE1, 2	137-1	D94-
DLC	193-1	C75
DP	137-1	F75
DP1	137-1	G67
DRL	136-1, 158-1, 166-1	G93 G96
DRL1	134-1, 136-1	H92 H95
DS	135-1, 135-2	C44
DSO	138-1	B65
DT		C108
E 2/5		E45-
EDR	135-1, 135-2	C31
ES	135-1, 135-2	C45
ESO	138-1	B65
EV	135-1, 135-2	B41
EV1	135-1, 135-2	C41
EVO	138-1	C61
F 2/5		E45-
FDR	135-1, 135-2	C31
FIF	144-1, 144-2, 178-1 206-1	C38
FKP	135-1, 135-2	E41
FL	143-1	C85
FL1	143-1	E86
FP	138-1	F84
FS	135-1, 135-2	C45
FSO	138-1	B66
FT	134-1	E37
FT1	134-1	E34
G 2/5		E46
GS	135-1, 135-2	C46
GSO	138-1	B66
H 2/5		E47-
HS	135-1, 135-2	C47
HSO	138-1	B67
J 2/5		E47-
JS	135-1, 135-2	C47
JSO	138-1	B67
K 2/5	135-2	E48-
KD	141-1	B82
KP	137-1	F73
KS	135-1, 135-2	C48
KSO	138-1	B68
L 2/5	135-1, 135-2	E49-
LIT	134-1	G37
LPD	193-1	B74
LS	135-1, 135-2	C49
LSO	138-1	B68
LSS	143-1	B78
M	193-1	B70
M7	135-1, 135-2	G49
MB	114-1	D34
ME	137-1, 144-1	F32
MF	193-1	B72
MF1-3	142-1	F66 F74
MFT	140-1	D83
MRL	144-1, 158-1, 178-1, 217-1	G94 H96

INDEX OF RELAYS, ETC. ON SD'S & OS'S
SD-68222-01, ISSUE 17

RM 1-8 2 SHEETS, SHEET 1

NO. 4A TOLL

ORDER AS BSP ITEM MP-11780

BELL TELEPHONE LABORATORIES, INC.

PRINTED IN U.S.A.

MP-11780 2 SHEETS, SHEET 1

ISSUE 2 GRS
DATE 10-5-59

ISSUE	2	GRS
DATE	10-5-53	

SD-68222-01

MF INCOMING SENDER CIRCUIT (CONT.)

DESIG.	LOCATION OS	LOCATION SD
MRL1	144-1, 178-1, 217-1	E32
MS	136-1, 144-1, 144-2	B33
MS1, 2	134-1, 136-1, 144-1, 144-2	C32-
MSO	138-1	B69
MT	216-1	C37
MX	135-1, 135-2	C49
NSK	194-1	B57
NV	134-1	G36
NV1	134-1	G37
OD	135-1, 135-2	B41
OD1	135-1, 135-2	D41
ODO	138-1	C60
OE	135-1, 135-2	B38
OF	139-1, 140-1	C89
OF1	140-1	C87
ON	134-1	D32
ON1	134-1	E34
OP	140-1, 141-1	C83
OP1, 2	140-1, 141-1	C84-
OSC	138-1	B60
OT(Tube)	145-1	H98
OTC	145-1	F98
OTS	145-1	G98
P	137-1	B91
PA	137-1	C93
PAO	138-1	B61
PB	137-1	C93
PBO	138-1	B62
PC	137-1	D95
PC1-6	137-1	B93-
PCK	137-1	A91

DESIG.	LOCATION OS	LOCATION SD
PCO	138-1	B62
PD	137-1	C94
PE	137-1	C94
PFX/PFXB	137-1	C57
PFX1/PFXA	137-1	D57
PFXC	137-1	D58
PG	137-1	G91
PG1	137-1	G90
PLK	128-1, 134-1, 140-1, 222-1	F39
PP	138-1	C81
PP'	138-1	C80
PS	138-1, 141-1	E86
R	143-1	B79
R1	141-1	C83
RA	135-1, 135-2	C41
RAR		E40
RAR1		E40
RCG	144-1, 144-2	B39
RCT	140-1	B39
RO	144-1, 144-2	E38
ROR	135-1, 135-2, 140-1	E38
ROR1	144-1, 144-2	F38
RR $\frac{2}{5}$	137-1	H62-
RSS	144-2	C101
RST	135-1, 135-2	F41
RST1, 2	135-1, 135-2	F40-
RT	134-1	D37
RT $\frac{2}{5}$	137-1	F62-
S	106-1, 112-1, 112-2, 134-1	D34

DESIG.	LOCATION OS	LOCATION SD
S1	134-1	D33
SA	141-1	D82
SA1	141-1	E82
SAR		E71
SAR1, 2		F71
SG1, 2	143-1	C76-
SK3, 6	194-1	B51 B54
SL	139-1, 140-1, 141-1	D83
SL1	140-1, 141-1	D82
SP	134-1, 222-1	E33
SP1	134-1	F33
SRM	144-2	D101
SST1	138-1	C81
SXD	193-1	B73
SXR	193-1	A79
SXR1	143-1	B79
SY	138-1	F86
SYN	135-1, 135-2	B41
T1	141-1	C83
TC3, 5	137-1	E76
TCA	137-1	E75
TEN	135-1, 135-2	C40
TG	139-1, 140-1	C89
TG1	143-1	C88
TGT	143-1	E87
TGT1	143-1	E88
TI	178-1, 220-1	A99
TKS	137-1, 170-1, 172-1, 202-1	C75
TKS1, 2	137-1	E76-
TM	134-1	E37

DESIG.	LOCATION OS	LOCATION SD
TMO-6	144-1, 144-2	G104
TMO-9	144-1	C39-
TMA	144-2	G104
TMB	144-2	G104
TMR	144-2	G104
TMS	144-2	G104
TNI	114-1	B98
TP	134-1	E37
TR	144-2	G80
TRL	144-1, 144-2, 158-1, 178-1, 220-1	E32
TS	134-1	E36
TST		B35
TST1		B34
VO	134-1	G36
W	137-1	E94
WR	137-1	E93
XDD	193-1	C76
XSG	193-1	C77
Z	137-1	E93

INDEX OF RELAYS, ETC, ON SD'S & OS&S
SD-68222-01, ISSUE 17

NO. 4A TOLL

2 SHEETS, SHEET 2 RM 1-8

MP- 11781

SD-68231-01
OUTGOING INTERTOLL TRUNK CIRCUIT
DP OR MF CX SIGNALING

DESIG.	OS
G	221-1
LO	127-1, 131-1, 139-1, 143-1, 216-1, 221-1
OS	127-1, 139-1, 216-1, 221-1
R	127-1, 139-1, 216-1 221-1
SL	127-1, 131-1, 139-1, 143-1, 216-1, 221-1
SVP	127-1, 139-1, 221-1

SD-68232-01
2-WAY INTERTOLL TRUNK CIRCUIT
DP INCOMING

DESIG.	OS
CO	121-1
G	101-1, 122-1, 203-1, 222-1
IR	
LC	101-1, 122-1
LO	128-1, 222-1
OS	128-1, 203-1, 222-1
OS1	128-1, 203-1, 222-1
R	128-1, 222-1
SL	128-1, 222-1
SP	121-1
SVP	101-1, 122-1, 128-1, 222-1
TM(Tube)	101-1, 222-1

SD-68233-01
2-WAY INTERTOLL TRUNK CIRCUIT
MF INCOMING

DESIG.	OS
CO	134-1, 222-1
G	
IR	
LC	128-1, 140-1, 222-1
LO	128-1, 140-1, 222-1
OS	140-1
OS1	140-1
R	128-1, 140-1, 222-1
SL	140-1
SP	134-1, 222-1
SVP	128-1, 134-1, 140-1, 222-1
TM(Tube)	

SD-68234-01
OUTGOING AUX. INTERTOLL TRUNK

DESIG.	OS
G	
LO	
OS	
R	222-1
SL	
SM	
T	
V(Tube)	

SD-68237-01
INCOMING TRUNK CIRCUIT
FROM NO. 3, 3C OR 3CL SWITCHBOARD

DESIG.	OS
CO	134-1
R	
S	134-1
S1	134-1
SP	134-1
SV	134-1

SD-68242-01
TOLL SWITCHING TRUNK CIRCUIT
DP OR MF

DESIG.	OS
S	127-1, 139-1, 216-1
SL	127-1, 139-1, 216-1

ISSUE	WAD
DATE 1-16-52	

R.B.B.

NO. 4A TOLL

INDEX OF RELAYS, ETC. ON SD'S & OS'S

SD-68231-01, ISSUE 6
SD-68232-01, ISSUE 9
SD-68233-01, ISSUE 11
SD-68234-01, ISSUE 11
SD-68237-01, ISSUE 3
SD-68242-01, ISSUE 7

RM 1- 9

MP- 11782

SD-68285-01
PAD SWITCHING CIRCUIT

DESIG.	OS
PA	221-1, 222-1
PB	
PC	

SD-68315-01
TOLL TANDEM TRUNK CIRCUIT - DP

DESIG.	OS
CO	121-1, 221-1, 222-1
H	101-1, 221-1, 222-1
L	101-1, 221-1, 222-1, 226-1
LU	221-1, 222-1
R	
R1	
SP	121-1, 221-1, 222-1
SV	221-1, 222-1, 226-1

SD-68326-01
TOLL SWITCHING TRUNK CIRCUIT
RP PCI OR DIAL PULSING

DESIG.	OS
CO	146-1
FD	
G	129-1, 141-1
OS	129-1, 141-1
RF	129-1, 141-1
RO	129-1, 141-1, 154-1
S	
S1	
SL	129-1, 141-1
SP	146-1

SD-68334-01
SENDER LINKAND CONNECTOR CIRCUIT

DESIG.	OS
A	101-1
AL	101-1
AR1,2	104-1
B	101-1
CA	103-1
CB	103-1
CC	103-1
D0-9	106-1
DT0-9	109-1, 109-2
EA	101-1
EB	101-1
FC0-9	105-1
L-	101-1, 102-1
LC-	102-1, 103-1
MC	102-1, 103-1
P(Hold)	106-1, 108-1, 108-2, 112-1, 112-2, 121-1, 134-1, 146-1
P'(Hold)	108-1, 108-2, 112-1, 112-2, 121-1, 134-1, 146-1
P(Sel)	110-1
P'(Sel)	
PC	101-1
PF	101-1
PU	101-1
RA	104-1
S(Hold)	106-1, 108-1, 108-2, 112-1, 112-2, 121-1, 134-1, 146-1
S'(Hold)	108-1, 108-2, 112-1, 112-2, 121-1, 134-1, 146-1
S(Sel)	111-1
S'(Sel)	111-1
SC0-9	105-1
SGB	113-1, 114-1
ST0-9	101-1, 106-1, 128-1, 140-1, 146-1
TC	101-1
TL-	107-1, 107-2
TM	101-1
TM1	101-1, 104-1
TU-	107-1, 107-2

SD-68336-01
CONTROLLER CONNECTOR CIRCUIT

DESIG.	OS
AL	104-1
B1,2	103-1, 104-1
CA1,2	103-1
CB1,2	103-1
CBR	104-1
CBT	103-1
CC1,2	103-1
CR	104-1
CS	103-1
CSA	103-1
LA1	102-1, 103-1
LA2	103-1
OC	104-1
PC1,2	104-1
PU	104-1
TC	

SD-68339-01
DECODER CONNECTOR CIRCUIT

DESIG.	OS
ADB	157-1
CA1	155-1
CA2-6	157-1
CB	155-1, 179-1
CF	158-1, 174-1
CHK	177-1
DC	155-1
DC1	155-1
DP	155-1, 156-1
GR	158-1
GR1	158-1
GR2-4	155-1, 158-1
GRA	155-1
GS	155-1
GT	156-1
GT1	156-1
MC	177-1, 188-1, 188-2
RLT	158-1, 177-1
RLT1	177-1
RO	174-1, 178-1, 220-1
RO1	174-1, 178-1, 220-1
SC	155-1
SC1	155-1
SMB	114-1
SP	124-1, 136-1, 155-1, 157-1
TI	178-1, 220-1
TR	158-1, 178-1, 220-1
TR1	174-1, 178-1, 220-1

ISSUE	1	WAD
DATE	1-18-52	R.B.B.

INDEX OF RELAYS, ETC. ON SD'S & OS'S

SD-68285-01,	ISSUE	6
SD-68315-01,	ISSUE	6
SD-68326-01,	ISSUE	7
SD-68334-01,	ISSUE	13
SD-68336-01,	ISSUE	7
SD-68339-01,	ISSUE	2

RM 1 - 10

BELL TELEPHONE LABORATORIES, INC.

NO. 4A TOLL

PRINTED IN

ORDER AS BSP ITEM MP- 11782

SD-68340-01

DECODER CIRCUIT

DESIG.	LOCATION OS	LOCATION SD
3D	136-1	D41
3DB	162-1	E85
5BD	160-1	F41
6D	136-1	C41
6DA	124-1, 136-1, 160-1	C42
6DB	162-1	E84
6DT	167-1	D47
AC	164-1	E92
AFA	164-1	E93
AHA	164-1	E92
ARB	162-1	E92
ARS	173-1	G53
ARST	171-1	E76
ART 2/5	164-1	A111-
ARU 2/5	164-1	A114-
ATB	170-1, 172-1, 202-1	G51
BD	179-1	B77-B71
BNA-F	165-1	A103-
BTO-1	164-1	C103
BU 2/5	165-1	D103-
BU 2'/5	165-1	G103-
CA	163-1	C43
CA4	164-1	A41
CA5	164-1	A42

DESIG.	LOCATION OS	LOCATION SD
CA6	164-1	A43
CAH	163-1	C42
CAK	166-1	F47
CBR-W	155-1, 179-1, 184-1	D167
CC	170-1	A51
CC1-5	161-1	B91-
CCA	161-1	C74
CCH 2/5	164-1	B95-
CCHN	164-1	B98
CCM	163-1	G93
CCT 2/5	164-1	D95
CCTN	164-1	D98
CCU 2/5	164-1	F95-
CCUN	164-1	F98
CDC 2/5	164-1	F170-
CFM	160-1, 174-1	D84
CFR	163-1, 174-1	H155
CFR1,2	174-1	H155-
CIO-5	171-1, 173-1	B74
CK1-3	160-1	E41-
CKG	155-1	G48
CKG1	155-1	E47
CKG2	155-1	G44
CO	173-1	C75
COP1,2	163-1, 185-1	E83-
CR	171-1	A52
CRO-9	171-1	E111-
CRA	, 171-1	B51
CRK	173-1	G73
CRP	171-1	C111

DESIG.	LOCATION OS	LOCATION SD
DA1,2	155-1	F166-G192
DA3	160-1	F166-F191
DBS	165-1	G108
DBS1-4	165-1	C101-C108-
DCB	170-1, 172-1	D55
DCB1,2	170-1, 172-1	D56-
DCBA	170-1, 172-1	D50
DFB	165-1, 184-1	A47
DFE	184-1	B47
DFTR	161-1	B138
DL	228-1	C153
DRL	166-1	G53
FAT	163-1	C43
FATH	163-1	C43
FC2-15	161-1	F131-
FMB	167-1	A54
FNT		F102
FOF	167-1	A54
FRO	167-1	A55
FST	167-1	A56
FTD	179-1	D143
FTD (Tube)	179-1	D143
FTD1	179-1	E143
GO-3	173-1	E74-
GB	173-1	E73
GPL	173-1	G75
HB	164-1	C44
HBA	167-1	E44
HBI	172-1	D54
HC1-16	161-1	E120-
HE	184-1	B47
HTK	161-1	B48

DESIG.	LOCATION OS	LOCATION SD
HTR	160-1, 161-1	B128
IT	164-1	B64-C197
IT1	168-1	D66-D197
IT2	168-1	D66-D197-E68
ITC	164-1	B65
MBU 2/5	164-1	C104-
MCCH	176-1	B95
MCCT	176-1	D95
MCCU	176-1	F95
MD	168-1, 179-1	D142
MD(Tube)	179-1	D142
MD1	179-1	E142
ME	168-1	F66 B68-G196
MKR	163-1	A62
NAC	164-1	E94
NC	174-1, 175-1	D85
NCA	164-1	A43
NCT	162-1, 175-1	C83
NCT1	174-1, 175-1	C86
NPCR	165-1	F102
NRO	132-1, 144-1, 160-1	D61
NSK	176-1	A94
NVO	162-1	A58
OAT	179-1	D146
OAT1	179-1	E146
OC	160-1, 163-1	F127
OC1-10	163-1	G120-
OCT		C163
OFCR	196-1	C75
OGT		D161
ORF	162-1	F61

ISSUE	1	WAD	2	R.E.C.
DATE	1-18-52	R.B.B.	12-22-53	

MP- 11783 2 SHEETS, SHEET 1

INDEX OF RELAYS, ETC. ON SD'S & OS'S

SD-68340-01, ISSUE 8

FM 1 - 11 2 SHEETS, SHEET 1

NO. 4A OR 4M TOLL

BELL TELEPHONE LABORATORIES, INC.

ORDER AS BSP ITEM MP- 11783

PRINTED IN U.S.A.

MP-11783

2 SHEETS, SHEET 2

ISSUE	1	2
DATE	7-18-52	12-22-53
	WAD	R.E.G.

R.B.B.

SD-68340-01
DECODER CIRCUIT

DESIG.	LOCATION OS	LOCATION SD
PCR	165-1	G102
PCR1	165-1	B108
PCR2	165-1	F108
PCR3	165-1	B101
PCR4	165-1	F101
PF	160-1	F42
R00-99	171-1, 173-1	A74
R6D	167-1	D46•
R6D1	167-1	D44
RA	160-1, 170-1	D51
RA1-3	170-1	D52-
RAMB	171-1, 173-1	G54
RARO	173-1	G55
RAV0-5	173-1	B76
RAV0'-5'	173-1	B76
RB0-5	173-1	B75
RC	228-1	A184
RC1	228-1	A186
RC2	228-1	A188
RCA	167-1, 170-1, 172-1	D57
RCA1	170-1, 172-1	D58
RCC	163-1	H47
RCD	167-1, 172-1	G52
RCRR	173-1	G76
REC	228-1	C152
RHC	167-1	E48
RI	163-1	D48
RI $\frac{2}{5}$	164-1	A170-
RIH	163-1	D47
RLS	173-1	D76
RLT	166-1, 177-1	G50
RO	132-1, 144-1, 160-1, 174-1	B61
ROIT	168-1	D65

DESIG.	LOCATION OS	LOCATION SD
ROMB	173-1, 191-1	G56
ROTC	168-1	E65, F195
RR	171-1	A53
RR0-9	171-1	F111-
RRA	171-1	A53
RRP	171-1	C112
RT	228-1	A181
RT1	228-1	A183
RTRF	171-1	G158
RYT	179-1	D145
RYT1	179-1	E145
SDT	158-1	G162-G164
SDT1		D163
SMC	168-1	D63
SMC1,2	168-1	D63
SMCO	168-1	C63-C195
SMI	168-1	D63
SMI1,2	168-1	D64
SS	179-1	C64
STI	132-1, 144-1, 160-1	D61
SWT	160-1, 168-1, 179-1	D144
SWT1	179-1	E144
TAL	179-1	E146
TB $\frac{2}{5}$	164-1	B174-
TBD	179-1	D143
TBD(Tube)	179-1	D142
TBD1	179-1	E143
TBY	165-1	D103
TBY1	165-1	E45
TC	164-1	B66 , C197
TC1,2	168-1	E66 , F197
TCD1,2	176-1	B92-
TCF	169-1	D179

DESIG.	LOCATION OS	LOCATION SD
TCK	161-1	C58
TCT0-2	164-1	D177-
TCU $\frac{2}{5}$	164-1	A176-
TGS		C75
TID	165-1	E102
TID1	165-1	E44
TKS	170-1, 172-1, 202-1	G54
TPC	164-1	F179
TR	174-1, 179-1, 218-1, 219-1	C154
TR1	179-1	C155
TR2A	160-1, 174-1	F42
TR2B	160-1, 174-1	A46
TR2C	160-1	H41
TRA	179-1	D146
TRB	228-1	C153
TRB1	228-1	C153
TRL	165-1, 174-1, 178-1, 220-1	D157
TRT	179-1	D145
TRT(Tube)	179-1	D145
TRT1	179-1	E145
TS0-2	164-1	F177-
TSA-C	160-1	F174
TSG1-4	180-1	F175-
TST		C156
TST1		C156
VCR1,2	175-1	D86-
VO	162-1	A57
WT(Tube)	179-1	D144
X6DT	167-1	F154
XCA	124-1, 136-1	F157
XCF	174-1	F153

DESIG.	LOCATION OS	LOCATION SD
XCO	160-1	F157
XDRL	124-1, 136-1, 166-1	F157
XIK	160-1	F156
XREC	228-1	F152
XRLT	177-1	F155
XTRB	178-1, 220-1	F154
XTRL	174-1, 178-1	F153
CB	179-1	E193
CBR1-W1	179-1	B193
CBR2-W2	179-1	B191
HVC	181-1	F86
PRO	181-1, 160-1	G71
RPRO	181-1	G71
RSR	181-1	E71
TR1A	160-1	G41

INDEX OF RELAYS, ETC. ON SD'S & OS'S
SD-68340-01, ISSUE 8

2 SHEETS, SHEET 2 RM 1 - 11

BELL TELEPHONE LABORATORIES, INC.

NO. 4A OR 4M TOLL

PRINTED IN U.S.A.

ORDER AS BSP ITEM MP- 11783

MP-11784

ISSUE	2	6
DATE	9-17-53	

SD-68341-01

TRANSLATOR CONNECTOR CIRCUIT

DESIG.	OS
C	183-1
CO-2	183-1
EMC	183-1
EME	184-1
EME[1]	184-1
EMO	184-1
EMC[1]	184-1
LO	183-1
LO[1]	183-1
P-	183-1

INDEX OF RELAYS, ETC. ON SD'S & OS'S

SD-68341-01, ISSUE 6

RM1 - 12

NO. 4A OR 4M TOLL

MP- 11785

ISSUE	GRS
DATE 10-26-53	
REC.	

SD-68342-01

CARD TRANSLATOR CIRCUIT

DESIG.	LOCATION OS	LOCATION SD
6DK	162-1	D50
A $\frac{2}{5}$	158-1, 162-1	F36
A $\frac{2}{5}$ (Magnets)	162-1	B38
AC(Tube)	164-1	F31
AFA(Tube)	164-1	F31
AHA(Tube)	164-1	F31
ALM	186-1	E40
ARC	166-1, 167-1, 170-1 172-1, 174-1, 175-1, 177-1	D43
ART $\frac{2}{5}$(Tubes)	164-1	F31
ARU $\frac{2}{5}$(Tubes)	164-1	F31
B $\frac{2}{5}$	158-1, 162-1	F36
B $\frac{2}{5}$ (Magnets)	162-1	B38
BTO, 1(Tubes)	164-1	F31
BU $\frac{2}{5}$(Tubes)	164-1	F31
BZ	186-1	H32
C $\frac{2}{5}$	158-1, 162-1	F36
C $\frac{2}{5}$ (Magnets)	162-1	B38
CA4-6(Tubes)	164-1	F31
CBK	162-1	E44
CCH $\frac{2}{5}$(Tubes)	164-1	F31
CCHN(Tube)	164-1	F31
CCT $\frac{2}{5}$(Tubes)	164-1	F31
CCTN(Tube)	164-1	F31

DESIG.	LOCATION OS	LOCATION SD
CCU $\frac{2}{5}$(Tubes)	164-1	F31
CCUN(Tube)	164-1	F31
CDC $\frac{2}{5}$(Tubes)	164-1	F31
CDLC(Tube)	164-1	F31
CGO, 1, 2, 4	162-1	F36
CGO, 1, 2, 4(Magnets)	162-1	B38
CKL		B32
CLTO, 1(Tubes)	164-1	F31
CLU $\frac{2}{5}$(Tubes)	164-1	F31
CON	161-1	D42
CS1, 2	162-1	F36-
CS1, 2(Magnets)	162-1	B38
CSL	161-1	C44
CSL1, 2(Lifts)	161-1	B34
D $\frac{2}{5}$	158-1, 162-1	F36
D $\frac{2}{5}$(Magnets)	162-1	B38
DIM		C40
E $\frac{2}{5}$	158-1, 162-1	F36
E $\frac{2}{5}$(Magnets)	162-1	B38
F $\frac{2}{5}$	158-1, 162-1	F36
F $\frac{2}{5}$(Magnets)	162-1	B38
GETO, 1(Tubes)	164-1	F31
GEU $\frac{2}{5}$(Tubes)	164-1	F31
GSTO, 1(Tubes)	164-1	F31

DESIG.	LOCATION OS	LOCATION SD
GSU $\frac{2}{5}$(Tubes)	164-1	F31
HB(Tube)	164-1	F31
HE	184-1	F42
IND1, 2	185-1	D41
IND1, 2(Tubes)	185-1	F34
IT(Tube)	164-1	F31
ITC(Tube)	164-1	F31
L1-4(Latches)	161-1	A37
LCH	161-1	C42
MOC		G48
MOC1-4		B48-
NAC(Tube)	164-1	F31
NCA(Tube)	164-1	F31
NSK(Tube)	164-1, 176-1	F31
NVO	158-1, 162-1	F36
NVO(Magnet)	162-1	B38
PD	161-1	C41
PD1-8(Magnets)	161-1	B35
PDS1-8	161-1	A40-
PU1, 2	161-1	C43
PU1-8(Magnets)	161-1	B30
PUS1-8	161-1	A42-
R1, 2(Tubes)	185-1	F35
RD	163-1, 185-1, 186-1	C41
RI $\frac{2}{5}$(Tubes)	164-1	F31
RT	178-1	G46
RT1-4	178-1	B46-
SA $\frac{2}{5}$	162-1	B51-
SB $\frac{2}{5}$	162-1	B54-
SC $\frac{2}{5}$	162-1	B56

DESIG.	LOCATION OS	LOCATION SD
SCGO, 1, 2, 4	162-1	G51-
SCS1, 2	162-1	G55
SD $\frac{2}{5}$	162-1	D51-
SE $\frac{2}{5}$	162-1	D54
SF $\frac{2}{5}$	162-1	D56-
SK3(Tube)	164-1, 176-1	F31
SK6(Tube)	164-1, 176-1	F31
SNVO	162-1	G54
SR	162-1, 166-1	E43
SVO	162-1	G53
TB $\frac{2}{5}$(Tubes)	164-1	F31
TC(Tube)	164-1	F31
TCTO-2(Tubes)	164-1	F31
TCU $\frac{2}{5}$(Tubes)	164-1	F31
TOS	184-1	H43
TPO-2(Tubes)	164-1	F31
TPC(Tube)	164-1	F31
TSO-2(Tubes)	164-1	F31
VO	158-1, 162-1	F36
VO(Magnet)	162-1	B38

INDEX OF RELAYS, ETC. ON SD'S & OS'S
SD-68342-01, ISSUE 7

MP-11786

SD-68386-01

MISCELLANEOUS CIRCUIT FOR
SENDER MAKE BUSY FRAME

DESIG.	OS
B	132-1,132-2,144-1,144-2
CHS	132-2,144-2,154-2
GB	114-1
HSS	154-2
SS (M.R.)	132-1,132-2,144-1,144-2, 154-1,154-2
SSE	132-1,132-2,144-1,144-2, 154-1,154-2
TB	154-1,154-2
TR (M.R.)	113-1
TRE	113-1
WA	154-1,154-2

ISSUE	1	WAD	2	J.B.K.	
DATE	1-18-52		1-5-54		

R.B.B.
R.E.C.

INDEX OF RELAYS,ETC.ON SD'S & OS'S

SD-68386-01, ISSUE 5

NO. 4A TOLL

RM 1-14

SD-68388-01

MARKER CIRCUIT

DESIG.	LOCATION OS	LOCATION SD
0DG	176-1	G85
4DG	176-1	G86
5DG	176-1	G86
ABL0-9	212-1	F161-
ABR0-9	212-1	F162-
AC	216-1	B171
AC1	216-1	C171
AK	215-1	C174
AK1	215-1	E173
ATB	197-1, 201-1	B113
B	216-1	D196
BK	210-1	E174
BM	188-1, 188-2, 218-1	G116
CBR	188-1, 188-2, 218-1	F117
CCH $\frac{2}{5}$	195-1	A84-
CCHA,B	195-1	A87
CCHN	195-1	A86
CCT	216-1	F193
CCT $\frac{2}{5}$	195-1	B84-
CCTA,B	195-1	B87-
CCTN	195-1	B86
CCU $\frac{2}{5}$	195-1	D84
CCUA,B	195-1	D87-
CCUN	195-1	D86
CDA	193-1	G96
CDLC	164-1	E98
CHB	212-1	C174
CHE	212-1	C173

DESIG.	LOCATION OS	LOCATION SD
CHL0-9	212-1	C161-
CHR0-9	212-1	C162-
CHT	212-1	E175
CHTK	212-1	E175
CK	215-1	F174
CKG	188-1, 188-2	F53
CKGA	190-1	F52
CL0-2	193-1	E91-
CL5-7	193-1	E93-
CL8-13	193-1	C94-
CL14	193-1	E97
CLA-C	193-1	G94-
CLCT	176-1	B193
CLT0,1	164-1	C95-
CLU $\frac{2}{5}$	164-1	B92-
CNE	190-1, 198-1	A116
CNO	190-1, 198-1	A117
COF	213-1	C195
CON1	216-1	D195
CON3	216-1	F195
CONA,B	216-1	D194-
CPL0-9	210-1, 212-1	E161-
CPR0-9	210-1, 212-1	E162-
DA1-3	188-1, 188-2	G117-
DE	190-1	B55
DFP	204-1	A131
DGA	194-1	G87
DL	228-1	B202
FA-FF	204-1	B126-
FA1-FF1	204-1	B131-
FA2-FF2	204-1	B133-
FG-FH	204-1	G126

DESIG.	LOCATION OS	LOCATION SD
FG1,FH1	204-1	G131-
FG2,FH2	204-1	G133-
FMB	191-1	C64
FOF	191-1	C63
FOFA	202-1	F63
FRO	191-1	C65
FST	191-1	C66
GCK	200-1	D183
GE1-39ODD	192-1, 202-1	B102-
GET0-1	164-1	F81-
GEU $\frac{2}{5}$	164-1	G80-
GS0-38EVEN	192-1, 202-1	B101-
GST0,1	164-1	A81-
GSU $\frac{2}{5}$	164-1	C80-
HLD	170-1, 172-1, 191-1	C67
HMT	216-1	E172
HMT1	216-1	C172
I0-19	205-1	C152
IA0-19	205-1	B152
ICB	208-1	C117
ICK	208-1	F184
ICO	205-1	C134
IC1,2	205-1	D136-
ID	204-1	A125
IEV	205-1	D146
IEV1	205-1	D145
IFK	208-1	G185
IL	205-1	B134
ILA	205-1	A135
IOD	205-1	B146
IOD1	205-1	B145
JC0-19	209-1	B143-

DESIG.	LOCATION OS	LOCATION SD
JP0-17	210-1	E155
JPN	210-1	F148
K0-39	200-1, 201-1, 203-1	F101
LCON	216-1	C192
LPD	193-1	B194
MB	190-1	C64
MBR	202-1	F67
MFF	206-1	D138
MFT	206-1	E138
MLCT	176-1	B192
MSC	203-1	E216
NDG	176-1	G85
NSK	164-1, 176-1	F85
O0-19	205-1	F150-
OAT	218-1	F202
OAT1,2	218-1	E202-
OC0	205-1	C135
OC1,2	205-1	D134
OCB	207-1	D117
OCK	207-1	C185
OCK1	207-1	E184
OD	204-1	A126
OEV	205-1	D144
OEV1	205-1	D142
OF	202-1	E91
OFK	207-1	D185
OGT		D57
OL	205-1	E144
OLA	205-1	F144
ONB	190-1	D187
ONG	190-1	C187
ONG1	190-1	F187

INDEX OF RELAYS, ETC. ON SD'S & OS'S

SD-68388-01, ISSUE 2

RM 1-15 2 SHEETS, SHEET 1

NO. 4A TOLL

ORDER AS BSP ITEM MP- 11787

BELL TELEPHONE LABORATORIES, INC.

PRINTED IN U.S.A.

MP- 11787 2 SHEETS, SHEET 1

ISSUE 1 WAT

DATE 1-16-72 R.B.B.

MP-11787

SD-68388-01

MARKER CIRCUIT

DESIG.	LOCATION OS	LOCATION SD
OOD	205-1	B144
OOD1	205-1	B142
OVA-D	213-1	D154-
PC	196-1	G114
PC1,2	196-1	F114
RC	228-1	C210
RC1-4	228-1	E210-
RCD	169-1, 173-1, 191-1, 197-1, 202-1	F57
RCD1,2	169-1	G55
RCK	197-1	D52
RCT	218-1	C195
RCT1	218-1	C195
REC	228-1	B203
RL	217-1	D183
RO	190-1	C65
ROB	202-1, 220-1	D205
ROR	202-1	F66
RS1-4	202-1	F64-
RT	228-1	E213
RT1	228-1	E213
RTA-D	213-1	C154-
RTA'-D'	213-1	A154-
SAR		F84
SCT	203-1, 216-1	E197
SCT1	203-1, 216-1	E196
SDT		D55
SDT1		D57
SG	203-1, 216-1	E197
SGA	203-1, 216-1	C196
SGA1	203-1	C196
SK	214-1	G186
SK3	164-1, 176-1	F86
SK6	164-1, 176-1	F86
SKA	194-1	F87
SMT	206-1	D137

DESIG.	LOCATION OS	LOCATION SD
SPT	214-1, 218-1	B206
SRL	216-1, 217-1	B182
SS	206-1	D137
STI	190-1	C66
T0-39	141-1, 203-1, 222-1, 227-1	E101
TB	202-1	B53
TB 2/5	192-1, 202-1	E75-
TB2K	192-1	E78
TBK	199-1	B111
TC0-29	169-1, 173-1, 191-1, 202-1	F71-
TCB	198-1	C116
TCBA	198-1	C116
TCK	198-1	C183
TCK1	198-1	B183
TKE	200-1, 201-1	A111
TKS	170-1, 172-1, 202-1	B52
TKT	201-1	B112
TKTK	201-1	B112
TM	218-1	C207
TM1	219-1	F207
TM1(Tube)	219-1	F207
TM1X	219-1	F206
TM2	219-1	F205
TM2(Tube)	219-1	F205
TM2X	219-1	F204
TM3	219-1	F206
TM3(Tube)	219-1	F206
TMR	218-1	D207
TP0-2	164-1	G112
TR	179-1, 218-1, 219-1	D204
TR1	190-1	C62
TR1A	190-1	F62
TR2	190-1	C62
TR2A	190-1	F62
TRA	218-1, 219-1	F204

DESIG.	LOCATION OS	LOCATION SD
TRB	228-1	D203
TRL	178-1, 202-1, 220-1	D205
TRT	219-1	G202
TRT(Tube)	219-1	F203
TRTX	219-1	F203
TSA	125-1, 137-1, 170-1, 172-1	B53
TST		B203
TSTA		B205
X	219-1	F183
XCO	190-1, 203-1	D175
XCO1	190-1, 203-1	B113
XCOA	190-1	C176
XCOB	190-1	C176
XCOC	190-1	F177
XI	205-1	G146
XIA	205-1	F146
XIS	216-1	E175
XILS	212-1	E177
XIPS	206-1, 215-1	G176
XJP	210-1	F147
XJS	212-1	E176
XK	210-1, 215-1	E177
XMRL	217-1	D207
XMS	203-1	B114
XMS1	203-1	B114
XO	205-1	G146
XOA	205-1	F146
XOLS	210-1, 212-1	E176
XRCK	167-1, 170-1, 172-1, 197-1	E53
XSM	215-1, 216-1	E177
XSM1	215-1	C177
XSMO	215-1	C177
XSMT	215-1	D177

DESIG.	LOCATION OS	LOCATION SD
XST	198-1, 207-1, 208-1, 218-1	G176
XSTR	220-1	C206
XTB	178-1, 199-1	F78
XTB1	199-1	F79
XTIF	208-1	G184
XTKS	170-1, 172-1, 202-1	D53
XTL	193-1, 194-1, 195-1	B88
XTL1	193-1, 194-1, 195-1	A88
XTOF	207-1	G184
XTR	220-1	D206
XTRL	202-1, 220-1	G206

ISSUE	1	WAD
DATE	1-18-52	R.B.B.

INDEX OF RELAYS, ETC. ON SD'S & OS'S
SD-68388-01, ISSUE 2

2 SHEETS, SHEET 2 RM 1 - 15

NO. 4A TOLL

SD68389-01

DECODER MARKER TEST AND TROUBLE RECORDER CIRCUIT

DESIG.	LOCATION OS	LOCATION SD
0DG		G143
3D		A146
3GS		D84
3DG		G143
4GS		D84
5DG		G143
5GS		D84
6D		A146
6DT		D146
6GS		D84
20C		G143
ACO		C56
AL	228-1	C55
AMS		D72
AMS1		F72
AR		A145
ARG		D154
ARG1		D155
BRC1-3	228-1	C95-
BRD	228-1	C91
BRMC	228-1	C92
BRMT	228-1	C94
CA		E152
CA4		D143
CA5		D143
CA6		D143
CBH		F151
CC1-4		A151-
CCH $\frac{2}{5}$		G143
CCT		B103
CCT $\frac{2}{5}$		G143
CCU $\frac{2}{5}$		G143
CDL		E154
CF		D145
CG0,1,2,4		G83
CGS		C85
CH	228-1	B55
CHK		C105
CKL		D152
CKR		C104
CL1,2		E153
CL12		D104
CLCT		F103
CMP0-7	228-1	B52
CMT0-7		D54
CNE	198-1	B140
CNO	198-1	A140
CON1		F105
CONT(Clutch)	229-1	H122
CPA0-5	228-1	B51
CPB0-5	228-1	B51
CPC0-5	228-1	B51
CPD0-5	228-1	B51
CPE0-5	228-1	B51
CPF0-5	228-1	B51
CR		E151
CR1,2		D151
CRC		D153
CTCI		G55
CTP	228-1	B55
DC		G143
DL		H147
DLC		G143
DMTP	228-1	B56
DP0-9	228-1	B53
DRL		D144
DT		D56
DT(Key release mag.)		A156
DT0-9		B53
DTRL		D144
DU		H147
ELT,ELT1		H93
ELT(Tube)		G93
ERL		H56
FTT(Key release mag.)		A155
FTU(Key release mag.)		A155
G0-3		A143
GMS		C75
GMS0-3		C75-
GR		H147
GSO-5		A142
GU0-3		F75-
HMG		D103
HMG1		D103
ICB		B141
IF0-3(Key release mag.)		E114-
IND		A150
INT(Clutch)	229-1	H122
ISB		C116
ISB1		C115
IT2		F106
KC		E64
KC1-8		C60-
KCD		C63
KCM		C64
KTR1		F147
LC0-9	220-1	A147
LCON		F104
LDT		F135
LCH(Latch)	229-1	G122
LK		E64
LMS		F75
LMS0-3		C73-
LPD		F103
M		G143
MBR		A145
MC	228-1	E96
MCO		B123
MCR	228-1	E121
MCT	228-1	D96
MCT(Tube)	228-1	F95
ME		C65
MF		G143
MFT		C113
MKT		E56
MOCK		E154
MP0-9		B52
MRL		F57
MS0-39		B72-
MSK		F74
MST		F73
MT		E105
MT0-9		E54
MTRL		D145

INDEX OF RELAYS, ETC. ON SD'S & OS'S

SD-68389-01, ISSUE 2

RM 1 - 16 2 SHEETS, SHEET 1

NO. 4A TOLL

ORDER AS BSP ITEM MP- 11788

BELL TELEPHONE LABORATORIES, INC.

PRINTED IN U.S.A.

MP- 11788 2 SHEETS, SHEET 1

ISSUE 1 WAD DATE 1-18-52 R.B.B.

MP-11788

SD-68389-01
DECODER MARKER TEST AND
TROUBLE RECORDER CIRCUIT

DESIG.	LOCATION OS	LOCATION SD
NCF		C105
NR(Tube)		F92
NRS		F92
NRS1		H92
NRT		G92
NRT(Tube)		F93
NSK		G143
OCB		B141
OEV		C114
OF		A145
ON		B124
OOD		C114
P1-3		D85-
PA		D134
PA1		G133
PFA-E		H147
R0-8	229-1	E141
RA1-3		A144
RAC		E86
RC1-3	228-1	C97-
RD	228-1	C92
RL		G57
RLM		E155
RLS		C86
RLT		F56
RLT1		H57
RMC	228-1	C93
RMT	228-1	C94
ROR		A145
RTI		C134
RTM		H95

DESIG.	LOCATION OS	LOCATION SD
RTOS		F91
RTR		E57
RTR1		E57
S0-8	229-1	E142
SCA		C83
SCT		C57
SG		C158
SK3		G143
SK6		G143
SLPD		G143
SMB		C116
SMB1		D116
SMG		C116
SMG1		D115
SM0-9		D147
SM10-19		D147
SM20-29		D147
SPC(Mess.Reg.)		C135
SPT		D72
SR		D72
SR1-3		G72-
SRA		E83
SS		C146
ST	228-1	D122
STR	228-1	E95
STR1	228-1	G91
STR2	228-1	F95
STRL		D145
SXD		G143
SXR		G143
T0-11		D136
TBS		C72
TC		G56

DESIG.	LOCATION OS	LOCATION SD
TC2		D106
TCB	198-1	B142
TCK	198-1	E84
TICB		A158
TKS		H72
TLC1-3		F143-
TM		G55
TM(Tube)		G94
TM1,2		F54-
TMC		F147
TOCB		A157
TON		F55
TRB	228-1	E91
TRC	228-1	B125
TRC1-3	228-1	C125-
TRMB		B125
TS		G55
TSR		B56
TST		E133
TST1-3		C132-
TTCB		A158
WAR		B122
XDD		G143
XJP		F147
XMS		F74
XPS		C115
XSG		G143
XSMI		F147
XSMO		F147

ISSUE	WAD
1	
DATE 1-18-52	
R.B.B.	

INDEX OF RELAYS, ETC. ON SD'S & OS'S
SD-68389-01, ISSUE 2

NO. 4A TOLL

2 SHEETS, SHEET 2 RM 1 - 16

BELL TELEPHONE LABORATORIES, INC.
PRINTED IN U.S.A.
ORDER AS BSP ITEM MP- 11788

ISSUE	1	WAD
DATE	1-18-52	R.B.B.

SD-68392-01

MISCELLANEOUS CIRCUIT - TROUBLE RECORDER FRAME

DESIG.	LOCATION OS	SD
AS	114-1	G24
B	104-1, 157-1, 158-1	C31
B1	218-1	D31
BAA-F	104-1	F31
BA1A-F	104-1	F31
C	156-1	G23
C1	156-1	H23
CCA-D	216-1	H20-
CM0-7		D23
CMS		D23
CMT1 0-7(M.R.)	218-1, 219-1	D23
CMT2(M.R.)	218-1, 219-1	D23
CT	157-1, 158-1	D24
CTA-F	107-1, 107-2	G31
D0-9	179-1	D23
DLW	114-1, 228-1	E22
DS	179-1	D23
DT1 0-9(M.R.)	179-1	D23
DT2(M.R.)	179-1	D23
DTA	179-1	A23
DTRT	179-1	A23
FBE1-19	165-1, 184-1	C27
FBE1'-16'	165-1, 184-1	D33
FBO1-19	165-1, 184-1	B27
FBO1'-16'	165-1, 184-1	D33
GT	157-1	D24
GTA	156-1	H23

DESIG.	LOCATION OS	SD
IM0-9		D23
IMS		D23
IMT1 0-9(M.R.)	218-1, 219-1	D23
IMT2(M.R.)	218-1, 219-1	D23
MG	184-1	G33
MG1	184-1	G33
MTA	218-1, 219-1	A23
MTRT		A23
OCB	207-1	A23
OR		A27
SMA	132-1, 144-1, 178-1	H25
SN	184-1	G33
TA	115-1, 179-1, 218-1, 219-1	F22
TA1	179-1, 218-1, 219-1	F22
TRE(M.R.)		H33
TRL	220-1	B25

INDEX OF RELAYS, ETC. ON SD'S & OS'S
SD-68392-01, ISSUE 2

NO. 4A TOLL

RM 1 - 17

MP- 11790

SD-68393-01
INCOMING LINK AND CONNECTOR CIRCUIT

DESIG.	OS
A	223-1
AL	208-1
CB	208-1
CH	208-1
FCH	208-1
FCM	208-1
FLH	208-1
FLM	208-1
LCH0-9	215-1
LCM0-9	
LWH	208-1
LWM	208-1
MC	208-1
MP	208-1
P(Hold)	216-1
P(Select)	168-1, 206-1, 215-1
R	223-1
S(Hold)	216-1
S(Select)	215-1
SH0-9	215-1
SLH	214-1
SLM	214-1
SM0-9	
T0-9	220-1

SD-68394-01
OUTGOING LINK AND CONNECTOR CIRCUIT

DESIG.	OS
A	223-1
AL	207-1
CB	207-1
CH	207-1
FCH	207-1, 211-1
FCM	207-1, 211-1
FLH	207-1
FLM	207-1
JCH0-9	209-1, 211-1
JCM0-9	209-1, 211-1
JLH	207-1, 211-1
JLM	207-1, 211-1
LCH0-9	
LCM0-9	215-1
LWH	207-1
LWM	207-1
MCA	207-1
MCB	207-1
MP	207-1
P(Hold)	216-1
P(Select)	215-1
R	223-1
S(Hold)	216-1
S(Select)	206-1
SH0-9	215-1
SM0-9	215-1

SD-68395-01
MARKER CONNECTOR CIRCUIT

DESIG.	OS
CB-	188-1, 188-2
MC1-3	188-1, 188-2
MCA	188-1, 188-2
MCB	188-1, 188-2
MP-	168-1, 188-1, 188-2
PMC	
PMI	

SD-68407-01
MISCELLANEOUS CIRCUIT
CARD TRANSLATOR

DESIG.	OS
AC	186-1
FA	186-1
FA1	186-1
LA	186-1
T	186-1

SD-68408-01
ALTERNATE ROUTE TRAFFIC CONTROL CIRCUIT

DESIG.	OS
L	171-1
RT00-99	171-1
RT'00-99	171-1
RTE	171-1
RTO	171-1

SD-68412-01
TRAFFIC REGISTER CIRCUIT

DESIG.	OS
A1	113-1
AL	114-1
ALM	113-1
B1	113-1
BS	180-1, 196-1
C	
DL	113-1
DPO	196-1
FO	
GB	
INC	
LD	
M	114-1
OG	
ORT	
PC(KS-14359 MAG.COUNTER)	
PH	113-1
R(M.R.)	113-1, 114-1, 153-1, 179-1, 180-1, 196-1
SGB	114-1
SO	
TC	
TD	
TW	
VC	
W	113-1
Z	113-1

ISSUE	1	WAD
DATE	1-18-52	

R.B.B

INDEX OF RELAYS, ETC. ON SD'S & OS'S
SD-68393-01, ISSUE 5
SD-68394-01, ISSUE 4
SD-68395-01, ISSUE 2
SD-68407-01, ISSUE 2
SD-68408-01, ISSUE 1
SD-68412-01, ISSUE 4
RM 1 - 18

NO. 4A TOLL

MP- 11791

ISSUE	1	WAD
DATE	1-18-52	R.B.B.

SD-68416-01
TIMING CONTROL CIRCUIT

DESIG.	OS
ADB	158-1
B	158-1
B1-3	158-1
F1-3	158-1

SD-68420-01
GROUP BUSY CHAIN RELAY CIRCUIT

DESIG.	OS
A	226-1
D	226-1
F	226-1
GB0-3	173-1
GBT	
OF	226-1
ON	226-1
RO	226-1
SL	226-1

SD-68429-01
MISCELLANEOUS CIRCUIT
EMERGENCY TRANSLATOR CONNECTOR
FIF CONTROL FRAME

DESIG.	OS
EA	184-1
FAA	
FAB	
FAE	
FAO	
FFA	
FFB	

SD-95048-01
COMPOSITE SIGNALING TYPE B
PHANTOM GROUP OR SINGLE CIRCUIT

DESIG.	OS
CX	101-1, 122-1, 203-1

SD-95087-01
RECEIVING CIRCUIT
MULTIFREQUENCY PULSING

DESIG.	OS
2/6	135-1
CK1-3	135-1
KP1-3	135-1
SP	135-1

SD-95391-01
MF CURRENT SUPPLY AND
DISTRIBUTION CIRCUIT

DESIG.	OS
A1,2	224-1
AL	224-1
ALM	224-1
B1,2	224-1
BE	224-1
BO	224-1
C1,2	224-1
CO	224-1
D1,2	224-1
E1,2	224-1
F1,2	224-1
GE	
GO	224-1
LE	224-1
LO	224-1
PL	224-1
PL1	224-1
TE	224-1
TE1-4	224-1
TO	224-1
TO1-4	224-1

INDEX OF RELAYS, ETC. ON SD'S & OS'S
SD-68416-01, ISSUE 1
SD-68420-01, ISSUE 1
SD-68429-01, ISSUE 2
SD-95048-01, ISSUE 12
SD-95087-01, ISSUE 20
SD-95391-01, ISSUE 12
RM 1-19

MP- 11792

SD-95536-01
RECEIVING CIRCUIT - MF PULSING

DESIG.	OS
0	135-2
1	135-2
2	135-2
4	135-2
7	135-2
10	135-2
CK2,3	135-2
FT	
KP	135-2
KP1	135-2
KP2	135-2
LK	135-2
SP	135-2

SD-96131-01
SWITCHBOARD NO. 15D
COMBINATION CORD CIRCUIT

DESIG.	OS
A	
AT	
C	
CH	122-1, 222-1, 226-1
CH1	
CN	
FL	
FR	
HL	
KA	
MA	
MC	122-1, 222-1, 226-1
P	122-1, 222-1, 226-1
PU	
RV	222-1
S	122-1, 222-1, 226-1
SA	
SC	122-1, 222-1, 226-1
SP	
TK	
TL	
TR	

SD-96164-01
SWITCHBOARD NO. 1, 11, 15C OR 15D
OUTGOING TRUNK AND IDLE
TRUNK INDICATING CIRCUITS

DESIG.	OS
L	
MB	
ML	
SL	122-1, 222-1, 226-1

SD-96232-01
SWITCHBOARD NO. 15D
DIAL CIRCUIT

DESIG.	OS
DA	
DC	
DC1	
DL	
DM	
ON	
ON1,2	
RV	122-1
TR	

ISSUE	WAD
DATE	1-18-52

R.B.B.

INDEX OF RELAYS, ETC. ON SD'S & OS'S
SD-95536-01, ISSUE 3
SD-96131-01, ISSUE 13
SD-96164-01, ISSUE 10
SD-96232-01, ISSUE 5
RM 1 - 20

BELL TELEPHONE LABORATORIES, INC.

NO. 4A TOLL

PRINTED IN U.S.A.

ORDER AS BSP ITEM MP-11792

MP-11652

ISSUE	1	GGS	2	4-8-61	3	7-22-63
DATE	6-20-51		12-22-53			

R.B.B.

SD-68018-01

OUTGOING SENDER CIRCUIT
REVERTING AND P.C.I.

DESIG.	FUNCTIONAL MEANING
0-6, 1'-6'	REVERTIVE PULSE COUNTING
AR	ALARM RELEASE
AV	SENDER ADVANCE
AV1, 2	SENDER ADVANCE AUXILIARIES
BO'	BREAK FUNDAMENTAL
CH	CHAIN HOLD
CI	CALL INDICATOR
CI1-3	CALL INDICATOR AUXILIARIES
CIA	CALL INDICATOR AUXILIARY
CLA, B	CLASS CONTROL
CLF	CLASS FAILURE
CLK	CLASS CHECK
CO	CLASS CONTROL
CP	CONTACT PROTECTION (STP relay contacts)
CR	CONTROL RINGING
CT	CUT-THROUGH
CTR	CANCEL TIMED RELEASE
DR	DISCONNECT REGISTRATION LEADS
DT	DOUBLE TEST
FC	FINAL CUT-THROUGH
FL	FINAL LOCK
FO'	FUNDAMENTAL OPEN
FO1-3	FUNDAMENTAL OPEN AUXILIARIES
FP	FINAL PULSE
FS	FULL SELECTOR
GCO	GROUND CUT-OFF
GR	GROUNDING
H, H'	HUNDREDS (Call indicator progress)
H1, 2, 4, 5	HUNDREDS REGISTER
HC	HUNDREDS PULSE CUT-THROUGH
HL	HUNDREDS PULSE LOCK
HLA	HUNDREDS PULSE LOCK AUXILIARY
HSS	HOLD STUCK SENDER
IA	INCOMING ADVANCE
IG	INCOMING GROUP
KC1	KEY CONNECTION
KKC	KEY KICK-OFF COMPLETION
KR	KEY RELEASE
KR1	KEY RELEASE AUXILIARY
LR	LINK RELEASE
MB	MAKE BUSY
O5	OVER FIVE (P.C.I. over 10,499)
OF	OVERFLOW
OF1-3	OVERFLOW AUXILIARIES
ON	OFF NORMAL

DESIG.	FUNCTIONAL MEANING
ON1, 2	OFF NORMAL AUXILIARIES
ONA	OFF NORMAL AUXILIARY
OT	OVER TEN
OT1, 2	OVER TEN AUXILIARIES
PC, PC1	PULSING COMPLETED
PG	PULSE GENERATOR
PG1-3	PULSE GENERATOR AUXILIARIES
PR	PULSE RING
PS	PULSING START
PT	PULSE TIP
PX	PANEL OR CROSSBAR
R	RING
RC	RELEASE COUNTER
RC1, 2	RING CONTROL
RCA	REGISTRATION CONTROL ADVANCE
RCO	RING CUT-OFF
RM	RING MARGINAL
RO	REORDER
RP	RING POLARIZED
RPT	RELEASE PULSE TIMING
RS	RING SENSITIVE
S	SLEEVE CONTROL
S1, S1'	INCOMING BRUSH
S2, S2'	INCOMING GROUP
S3, S3'	FINAL BRUSH
S4, S4'	FINAL TENS
S5, S5'	FINAL UNITS
S6, S6'	TRUNK TEST - INCOMING ADVANCE
SA	SENDER ABANDONED
SB	SENDER BUSY
SP	SPLITTING (Incoming trunk)
SP1, 2	SENDER CONTROL
SPA	SPLITTING AUXILIARY
SPK	SPLITTING CHECK
SSR	STUCK SENDER REGISTER
ST	START PULSE RECEIVED
ST1, 2, 4, 5	STATIONS REGISTER
STA, STA'	STATIONS - FINAL POSITION (Call indicator progress)
STB, STB'	STATIONS - FIRST POSITION (Call indicator progress)
STC	STATIONS PULSE CUT-THROUGH
STD	STATIONS OUTPULSING (First and second parts)

DESIG.	FUNCTIONAL MEANING
STE	STATIONS OUTPULSING (Third and fourth parts)
STF	STATIONS OUTPULSING (Final position)
STL	STATIONS PULSE LOCK
STP	STEPPER
T, T'	TENS (Call indicator progress)
T1, 2, 4, 5	TENS REGISTER
TC	TENS PULSE CUT-THROUGH
TG	TRUNK GUARD
TG1-3	TRUNK GUARD AUXILIARIES
TH, TH'	THOUSANDS (Call indicator progress)
TH1, 2, 4, 5	THOUSANDS REGISTER
TH1', 2', 4', 5'	THOUSANDS REGISTER
THC	THOUSANDS PULSE CUT-THROUGH
THE	THOUSANDS OUTPULSING (First and second parts)
THF	THOUSANDS OUTPULSING (Third and fourth parts)
THL	THOUSANDS PULSE LOCK
TL	TENS PULSE LOCK
TM	TIP MARGINAL
TM1-10	TIMING
TP	TIP POLARIZED
TR	TRANSFER (After class check)
TS	TIP SENSITIVE
TST, TST1	TEST CONNECTOR
U, U'	UNITS (Call indicator progress)
U1, 2, 4, 5	UNITS REGISTER
UC	UNITS PULSE CUT-THROUGH
UL	UNITS PULSE LOCK
WA	WAITING ASSIGNMENT
WA1	WAITING ASSIGNMENT AUXILIARY
XBR	CROSSBAR

FUNCTIONAL DESIGNATIONS
SD-68018-01, ISSUE 28

NO. 4A OR 4M TOLL

RM 2-1

MP-11653

SD-68020-01
INCOMING LINK AND CONNECTOR CIRCUIT

DESIG.	FUNCTIONAL MEANING
A	ALTERNATE (Frequency cut-in)
AL	ALARM
CB	CONNECTOR BUSY
CH	CHAIN GUARD
FCH	FRAME CONNECTOR (Home)
FCM	FRAME CONNECTOR (Mate)
FLH	FRAME LOCKOUT (Home)
FLM	FRAME LOCKOUT (Mate)
LCH0-9	LINK CONNECTOR CUT-IN (Home)
LCM0-9	LINK CONNECTOR CUT-IN (Mate)
LWH	LINK WANTED (Home)
LWM	LINK WANTED (Mate)
MC	MARKER CONNECTOR
MP	MARKER PREFERENCE
P(Hold)	PRIMARY HOLD MAGNETS
P(Sel)	PRIMARY SELECT MAGNETS
R	REGULAR (Frequency cut-in)
S(Hold)	SECONDARY HOLD MAGNET
S(Sel)	SECONDARY SELECT MAGNET
SH0-9	SELECT MAGNET (Home)
SLH	SELECT MAGNET LOCKOUT (Home)
SLM	SELECT MAGNET LOCKOUT (Mate)
SM0-9	SELECT MAGNET (Mate)
T0-9	TROUBLE INDICATOR (Cut-in)

SD-68022-01
OUTGOING LINK AND CONNECTOR CIRCUIT

DESIG.	FUNCTIONAL MEANING
A	ALTERNATE (Frequency cut-in)
AL	ALARM
CB	CONNECTOR BUSY
CH	CHAIN GUARD
FCH	FRAME CONNECTOR (Home)
FCM	FRAME CONNECTOR (Mate)
FLH	FRAME LOCKOUT (Home)
FLM	FRAME LOCKOUT (Mate)
JCH0-9	JUNCTOR CUT-IN (Home)
JCM0-9	JUNCTOR CUT-IN (Mate)
JLH	JUNCTOR LOCKOUT (Home)
JLM	JUNCTOR LOCKOUT (Mate)
LCH0-9	LINK CONNECTOR CUT-IN (Home)
LCM0-9	LINK CONNECTOR CUT-IN (Mate)
LWH	LINK WANTED (Home)
LWM	LINK WANTED (Mate)
MCA	MARKER CUT-IN
MCB	MARKER CUT-IN
MP	MARKER PREFERENCE
P(Hold)	PRIMARY HOLD MAGNETS
P(Sel)	PRIMARY SELECT MAGNETS
R	REGULAR (Frequency cut-in)
S(Hold)	SECONDARY HOLD MAGNETS
S(Sel)	SECONDARY SELECT MAGNETS
SH0-9	SELECT MAGNET (Home)
SM0-9	SELECT MAGNET (Mate)

SD-68027-01
TRUNK BLOCK CONNECTOR CIRCUIT

DESIG.	FUNCTIONAL MEANING
A	ALTERNATE (Frequency cut-in)
AL	ALARM
CB	CONNECTOR BUSY
CH	CHAIN GUARD
GC0,1	GROUP CONTROL
JB	JUMP HUNT GROUP BUSY
JH	JUMP HUNT
JH1	JUMP HUNT AUXILIARY
JR	JUMP HUNT ROUTE SIGNAL
MCA,B	MARKER CUT-IN
MP	MARKER PREFERENCE
R	REGULAR (Frequency cut-in)
TBA0-9	TRUNK BLOCK
TBB0-9	TRUNK BLOCK

ISSUE	1	GGS
DATE	6-20-51	

R.B.B.

FUNCTIONAL DESIGNATIONS
SD-68020-01, ISSUE 12
SD-68022-01, ISSUE 13
SD-68027-01, ISSUE 14

BELL TELEPHONE LABORATORIES, INC.

NO. 4A TOLL

RM 2-2

PRINTED IN U.S.A.

ORDER AS BSP ITEM MP-11653

MP-11654

ISSUE	1	GGS
DATE	6-20-51	R.B.B.

SD-68028-01
LINK CONTROLLER CIRCUIT

DESIG.	FUNCTIONAL MEANING
A	SECONDARY SWITCH LEVEL (Levels 0 & 5)
AA	A AUXILIARY
AL	CONTROLLER ALARM
AL1	CONTROLLER ALARM AUXILIARY
AP	TRUNK GROUP AND SENDER PREFERENCE (Starting with T0)
AR	AUXILIARY RELEASE
AR1	AUXILIARY RELEASE AUXILIARY
AS	"A" SENDER GROUP (Senders associated T0-T9)
AT	AUXILIARY TEST
B	SECONDARY SWITCH LEVEL (Levels 1 & 6)
BA	B AUXILIARY
BP	TRUNK GROUP AND SENDER PREFERENCE (Starting with T4)
BS	"B" SENDER GROUP (Senders associated T15 - T24)
BT0	BUSY TEST (1st link in A primary switch)
BT1	BUSY TEST (2nd link in A primary switch)
BT2	BUSY TEST
BT3	BUSY TEST (1st link in B primary switch)
BT4	BUSY TEST (2nd link in B primary switch)
BT5	BUSY TEST
C	SECONDARY SWITCH LEVEL (Levels 2 & 7)
CA	C AUXILIARY
CK	CLASS CHECK (CL1 or CL0 operated)
CL	CLASS
CL0	CLASS* (Sender type)
CL1	CLASS* (Sender type)(Z apparatus)
CO	CUT-OFF (Trouble indicator)
CP	TRUNK GROUP AND SENDER PREFERENCE (Starting with T8)
CT	CONNECT TEST (OF TST)
CTT	CONTROLLER TEST (Test call)
CTT1	CONTROLLER TEST (Test call) AUXILIARY
D	SECONDARY SWITCH LEVEL (Levels 3 & 8)
DA	D AUXILIARY
DA1-3	AUXILIARY START SHORT TIMING
DG	DISCONNECT GROUP
DG1	DISCONNECT GROUP AUXILIARY
DL	DOUBLE TEST LOWER (DT0 to DT4)
DP	TRUNK GROUP AND SENDER PREFERENCE (Starting with T17)

DESIG.	FUNCTIONAL MEANING
DR	DELAY REGISTER
DT(Tube)	DOUBLE TEST
DTC	DOUBLE TEST CONNECT
DTCA	DOUBLE TEST CONNECT AUXILIARY
DU	DOUBLE TEST UPPER (DT5 to DT9)
E	SECONDARY SWITCH LEVEL (Levels 4 & 9)
EA	E AUXILIARY
EP	TRUNK GROUP AND SENDER PREFERENCE (Starting with T21)
FR1-4	FRAME RELEASE (Long time-out)
G	TRUNK GROUP SELECTED (S option)
G0-9	TRUNK GROUP IDENTIFICATION
GE	TRUNK GROUP END (Locks out other groups)
GR	RELEASE PORTION OF GROUP NOT USED
GX	GROUP CROSS
GX1	GROUP CROSS AUXILIARY
HA	HOLD MAGNET "A" SUBGROUP EXCLUDED
HB	HOLD MAGNET "B" SUBGROUP EXCLUDED
HM	HOLD MAGNET LOCKED
HO	HOLD MAGNET OPERATED
HP	HOLD MAGNET PATHS CHECK TEST FEATURE WHILE CONTROLLER IS NORMAL
HT	HOLD MAGNET LEAD TRANSFER
HT1	HOLD MAGNET LEAD TRANSFER AUXILIARY
HX	HOLD MAGNET CROSS
L	TRUNK SELECTED
L0-9	PRIMARY SWITCH LEVEL
LC	LOWER CHOICE
LE	LINE END OR GATE RELAY
LM	LOWER MAGNETS
LN	L RELAYS NORMAL
LR	LINE RELEASE
MA	MAJOR ALARM
MB	MAKE BUSY
MCB	MAINTENANCE CENTER BUSY
NX	NORMAL CROSS TEST
OD	OPERATE LINK D (and GR)
ON	OFF NORMAL
OT	OPERATED TL- OR TU-
P	PRIMARY SELECT MAGNET LEADS CLOSED
P0-5	PREFERENCE CHAIN (See AP to EP)
PA	PREFERENCE AUXILIARY
PAO	PRIMARY SELECT MAGNET "A" SWITCH OPERATED

DESIG.	FUNCTIONAL MEANING
PB	PREFERENCE (See PA)
PBO	PRIMARY SELECT MAGNET "B" SWITCH OPERATED
PC	PREFERENCE CONTROL
PCA	PEG COUNT CONTROLLER ATTEMPTS
PG	PROGRESS (Stuck on T.I.)
PR	PRIMED RELEASE
PSA	PRIMARY SELECT MAGNET - "A" GROUP SWITCHES
PSB	PRIMARY SELECT MAGNET - "B" GROUP SWITCHES
PU	PICK UP
PX	PRIMARY SELECT MAGNET CROSS
PX1	PRIMARY CROSS AUXILIARY
R1,2	RELEASE AUXILIARIES
RC	RECYCLE DOUBLE TEST
RL	RELEASE
RP	REPEATER LINK
RP1	REPEATER LINK AUXILIARY
RS	RECORDER START
RT	RELAY TRANSFER OF PREFERENCE PA, PB
SAO	SECONDARY MAGNETS "A" - OPERATED
SBO	SECONDARY MAGNETS "B" - OPERATED
SC	SLEEVE CONTINUITY
SD	SENDER LINK
SD1	SENDER LINK AUXILIARY
SMO	SELECT MAGNET OPERATE
SSA	SECONDARY SELECT MAGNET - "A" SWITCH
SSB	SECONDARY SELECT MAGNET - "B" SWITCH
ST	START
SX	SECONDARY SELECT MAGNET CROSS
SX1	SECONDARY CROSS AUXILIARY
T	SENDER TESTED IDLE
T0-29	SENDER BUSY TEST
TBR	TROUBLE
TC	TEST COMPLETED
TC0-6	TROUBLE CONNECT
TE	TEST END
TL	TROUBLE INDICATOR LOCKOUT
TR	TIME RELEASE
TR1-4	TIME RELEASE AUXILIARIES
TRC	TIMING RECYCLE
TRL	TROUBLE RELEASE
TST	SENDER TEST
TT	TUBE TIMER

DESIG.	FUNCTIONAL MEANING
TT(Tube)	TUBE TIMER
UC	UPPER CHOICE
UM	UPPER SWITCH SELECT MAGNETS

* CL0 and CL1 may be used arbitrarily for any type of sender when two types of senders appear on one frame.

FUNCTIONAL DESIGNATIONS
SD-68028-01, ISSUE 24

NO. 4A TGLL

RM 2-3

MP-11655

SD-68056-01
DELAY QUOTATION TRUNK CIRCUIT
TOLL SWITCHBOARD NO. 5

DESIG.	FUNCTIONAL MEANING
F	FLASH
L	LINE
L1	LINE AUXILIARY
S	SLEEVE
S1	SLEEVE AUXILIARY
ST	START

SD-68135-01
INTERTOLL OR TOLL TANDEM
INCOMING TRUNK CIRCUIT - DP

DESIG.	FUNCTIONAL MEANING
CO	CUT-OFF
IN	INCOMING CALL
IR	INCOMING RING
LC	LINE CLOSURE
SP	SPLITTING
SV	SUPERVISORY
TM(Tube)	TIMING

SD-68162-01
OPERATORS TELEPHONE CIRCUIT
TOLL SWITCHBOARD NO. 5

DESIG.	FUNCTIONAL MEANING
BT	BUSY TEST
M	MONITOR
P	POSITION
T	TALK
T1	TALK AUXILIARY

ISSUE	1	GGS
DATE	6-20-51	

R.B.B.

FUNCTIONAL DESIGNATIONS
SD-68056-01, ISSUE 6
SD-68135-01, ISSUE 13
SD-68162-01, ISSUE 11
RM 2-4

NO. 4A TOLL

SD-68221-01

DIAL PULSE INCOMING SENDER CIRCUIT

DESIG.	FUNCTIONAL MEANING
5DB	NO. FIVE BOARD
6DT	SIX-DIGIT TRANSLATION
20C	20 CYCLE
20C1	20 CYCLE AUXILIARY
A $\frac{2}{5}$	'A' DIGIT REGISTER
AA0,1	'A' DIGIT TRANSLATION
AA4,7	'A' DIGIT ('V' option) TRANSLATION
AB0,1	'B' DIGIT TRANSLATION
AB4,7	'B' DIGIT ('V' option) TRANSLATION
ABC	ABC DIGITS CUT THROUGH
ABC1	ABC DIGITS CUT THROUGH AUXILIARY
AC0,1	'C' DIGIT ('V' option) TRANSLATION
ACT	A-C TRANSFER
ADR	'A' DIGIT REGISTERED
AS	'A' DIGIT INSTEERING
ASO	'A' DIGIT OUTSTEERING
AV	ADVANCE
AV1	ADVANCE AUXILIARY
B $\frac{2}{5}$	'B' DIGIT REGISTER
BD	BETWEEN DIGITS
BS	'B' DIGIT INSTEERING
BSO	'B' DIGIT OUTSTEERING
C $\frac{2}{5}$	'C' DIGIT REGISTER
CA	CONVERT 'A' DIGIT
CA1	CONVERT 'A' DIGIT AUXILIARY

DESIG.	FUNCTIONAL MEANING
CA4	COME AGAIN 4 ('X,B' option)
CA4A	COME AGAIN 4 AUXILIARY ('X,B' option)
CA5	COME AGAIN 5 ('W,B' option)
CA5A	COME AGAIN 5 AUXILIARY ('X,W,B' option)
CA6	COME AGAIN 6
CB	CONVERT 'B' DIGIT
CB1	CONVERT 'B' DIGIT AUXILIARY
CC	CONVERT 'C' DIGIT
CC1	CONVERT 'C' DIGIT AUXILIARY
CD	CONVERT 'D' DIGIT
CD1	CONVERT 'D' DIGIT AUXILIARY
CE	CONVERT 'E' DIGIT
CE1	CONVERT 'E' DIGIT AUXILIARY
CF	CONVERT 'F' DIGIT
CF1	CONVERT 'F' DIGIT AUXILIARY
CH	'C' HOLD
CH $\frac{2}{5}$	CODE CONVERSION HUNDREDS
CM	CLASS MARGINAL
CP	CLASS POLARIZED
CRS	CLASS RING SENSITIVE
CS	'C' DIGIT INSTEERING
CSO	'C' DIGIT OUTSTEERING
CT $\frac{2}{5}$	CODE CONVERSION TENS
CTA	CANCEL TIME ADVANCE
CTR	CANCEL TIME RELEASE
CTS	CLASS TIP SENSITIVE
CU $\frac{2}{5}$	CODE CONVERSION UNITS
CX	COMPOSITE

DESIG.	FUNCTIONAL MEANING
D $\frac{2}{5}$	'D' DIGIT REGISTER
DC	D-C KEY PULSE
DC1,2	D-C KEY PULSE AUXILIARY
DDR	'D' DIGIT REGISTERED
DE1,2	DIGIT END
DLC	DELAYED LOOP CLOSURE
DP	DIAL PULSE
DP1	DIAL PULSE AUXILIARY
DPS	'D' POSITION START
DRL	DECODER RELEASE
DRL1	DECODER RELEASE AUXILIARY
DS	'D' DIGIT INSTEERING
DSO	'D' DIGIT OUTSTEERING
DT	DOUBLE TEST
E $\frac{2}{5}$	'E' DIGIT REGISTER
EDR	'E' DIGIT REGISTERED
EPS	'E' POSITION START ('X,B' option)
ES	'E' DIGIT INSTEERING
ESO	'E' DIGIT OUTSTEERING
EV	EVEN INSTEERING
EVO	EVEN OUTSTEERING
EX	EXTRA DIGIT RECEIVED
EX1	EXTRA DIGIT RECEIVED AUXILIARY
F $\frac{2}{5}$	'F' DIGIT REGISTER
FDR	'F' DIGIT REGISTERED
FIF	FRAME IDENTIFICATION FAILURE
FL	FLASH
FL1	FLASH AUXILIARY
FP	FINAL PULSE

DESIG.	FUNCTIONAL MEANING
FPP	FALSE PULSE PROTECTION
FPS	'F' POSITION START ('W,B' option)
FS	'F' DIGIT INSTEERING
FSO	'F' DIGIT OUTSTEERING
FT	FUNDAMENTAL TRANSFER
FT1	FUNDAMENTAL TRANSFER AUXILIARY
G $\frac{2}{5}$	'G' DIGIT REGISTER
GPS	'G' POSITION START
GS	'G' DIGIT INSTEERING
GSO	'G' DIGIT OUTSTEERING
H $\frac{2}{5}$	'H' DIGIT REGISTER
HPS	'H' POSITION START
HS	'H' DIGIT INSTEERING
HSO	'H' DIGIT OUTSTEERING
IS	INTERDIGITAL TIMING START
IT(Tube)	INTERDIGITAL TIMING
ITC	INTERDIGITAL TIMING COMPLETED
J $\frac{2}{5}$	'J' DIGIT REGISTER
JPS	'J' POSITION START
JS	'J' DIGIT INSTEERING
JSO	'J' DIGIT OUTSTEERING
K $\frac{2}{5}$	'K' DIGIT REGISTER
KD	KEY CIRCUIT DETECTOR
KP	KEY PULSE
KS	'K' DIGIT INSTEERING
KSO	'K' DIGIT OUTSTEERING
L	LINE
L $\frac{2}{5}$	'L' DIGIT REGISTER

FUNCTIONAL DESIGNATIONS
SD-68221-01, ISSUE 17

RM 2-5 3 SHEETS, SHEET 1 NO. 4A TOLL

ORDER AS BSP ITEM MP-11656

BELL TELEPHONE LABORATORIES, INC.

PRINTED IN U.S.A.

ISSUE 2 GRS
DATE 10-5-53

3 SHEETS, SHEET 1

MP-11656

ISSUE	2	GRS
DATE	10-5-53	

SD-68221-01

DIAL PULSE INCOMING SENDER CIRCUIT (CONT.)

DESIG.	FUNCTIONAL MEANING
LA-E	LINE AUXILIARIES
LIT	LONG INCOMING TRUNK (Traffic separation)
LP	LOOP
LPD	LOOP DIAL
LPS	'L' POSITION START
LR	LINE RELEASE
LS	'L' DIGIT INSTEERING
LSO	'L' DIGIT OUTSTEERING
LSS	LINE SEIZURE SIGNAL
M	MANUAL
MB	MAKE BUSY
ME	MARKER ENGAGED
MF	MULTIFREQUENCY
MF1-3	MULTIFREQUENCY AUXILIARY
MFT	MULTIFREQUENCY TIMING (Before outpulsing)
MRL	MARKER RELEASE
MRL1	MARKER RELEASE AUXILIARY
MS	MARKER START
MS1,2	MARKER START AUXILIARY
MSO	'M' STEERING OUT
MT	MARKER TRANSFER
NSK	NO SKIP (All digits registered are to be outpulsed)
NV	NON VIA
NV1	NON VIA AUXILIARY
OD	ODD INSTEERING
ODO	ODD OUTSTEERING
OF	OVERFLOW (Off hook)
OF1	OVERFLOW AUXILIARY
ON	OFF NORMAL
ON1	OFF NORMAL AUXILIARY

DESIG.	FUNCTIONAL MEANING
OP	OUTPULSE
OP1,2	OUTPULSE AUXILIARY
OSC	OUTSTEERING COCK
OT(Tube)	OVERLOAD TIMING
OTC	OVERLOAD TIMING CONTROL
OTS	OVERLOAD TIMING START
P	PULSING
P1-6	PULSE COUNTING
P1A	PULSE COUNTING AUXILIARY
P6A	PULSE COUNTING AUXILIARY
PA	PULSE COUNTING AUXILIARY
PAO	PREFIX 'A' OUTSTEERING
PB	PULSE COUNTING
PBO	PREFIX 'B' OUTSTEERING
PC	PULSE COUNTING AUXILIARY
PC1-6	PULSE COUNTING
PCK	PULSE CHECK
PCO	PREFIX 'C' OUTSTEERING
PD	PULSE COUNTING AUXILIARY
PE	PULSE COUNTING AUXILIARY
PFX/PFXB	PREFIX (Code conversion digits)
PFX1/PFXA	PREFIX AUXILIARY
PFXC	PREFIX AUXILIARY
PG	PULSE GENERATING
PG1	PULSE GENERATING AUXILIARY
PP	PRELIMINARY PULSE A-C OUTPULSING
PP'	PRELIMINARY PULSE A-C OUTPULSING
PS	PULSE START
R	RING
R1	RING OUTPULSE
RA	REGISTER ADVANCE
RA1	REGISTER ADVANCE AUXILIARY

DESIG.	FUNCTIONAL MEANING
RCG	RECYCLE GO
RCT	RECYCLE TIME
RO	REORDER
ROA	REORDER AUXILIARY
RR $\frac{2}{5}$	RECAPTURE RING
RS	RING SENSITIVE
RSS	RECORD STUCK SENDER
RT	RELAY TRANSFER
RT $\frac{2}{5}$	RECAPTURE TIP
RTA	RELAY TRANSFER AUXILIARY
S	SLEEVE
S1	SLEEVE AUXILIARY
SA	SENDER ATTACHED
SA1	SENDER ATTACHED AUXILIARY
SAR	SEND ALTERNATE ROUTE
SAR1,2	SEND ALTERNATE ROUTE AUXILIARY
SG1,2	STOP-GO AUXILIARY
SK3	SKIP 3 (Outpulsing starts at 4th registered digit except on code conversion calls)
SK6	SKIP 6 (4A only)
SL	SLEEVE OUT
SL1	SLEEVE OUT AUXILIARY
SP	INCOMING TRUNK SPLIT
SP1	INCOMING TRUNK SPLIT AUXILIARY
SR	SLOW RELEASE
SR1	SLOW RELEASE AUXILIARY
SRM	SENDER RECORD MADE
SST	SEND START
SST1	SEND START AUXILIARY
SXD	SIMPLEX DIAL

DESIG.	FUNCTIONAL MEANING
SXR	SIMPLEX RING
SXR1	SIMPLEX RING AUXILIARY
SY	SYNCHRONIZING
T1	TIP OUTPULSE
TC3	TIMING COMPLETED 300 MS
TC5	TIMING COMPLETED 500 MS
TCA	TIMING COMPLETED (DLC timing)
TG	TRUNK GUARD (On-hook)
TG1	TRUNK GUARD AUXILIARY
TGT	TRUNK GUARD TIMING
TGT1	TRUNK GUARD TIMING AUXILIARY
TI	TROUBLE INDICATOR
TKS	TRUNK SELECTED
TKS1,2	TRUNK SELECTED AUXILIARY
TL	TOLL
TM0-9	TIMING
TN1	TRUNK NUMBER INDICATOR
TR	TROUBLE RECORD
TRL	TROUBLE RELEASE
TRM	TRUNK MARGINAL
TRP	TRUNK POLAR
TS	TIP SENSITIVE
TST	TEST
TST1	TEST AUXILIARY
TX	TX
TXA	TX AUXILIARY
VO	VIA ONLY
W	PART OF W-Z RELAY COMBINATION CIRCUIT
WR	PART OF W-Z RELAY COMBINATION CIRCUIT

FUNCTIONAL DESIGNATIONS
SD-68221-01, ISSUE 17

NO. 4A TOLL

3 SHEETS, SHEET 2 RM 2-5

ISSUE	2	GRS
DATE	10-6-73	

SD-68221-01

DIAL PULSE INCOMING SENDER CIRCUIT (CONT.)

DESIG.	FUNCTIONAL MEANING
XDD	EXPECT DELAY IN DIALING
XSG	EXPECT STOP-GO
Z	PART OF W-Z RELAY COMBINATION CIRCUIT

SD-68222-01

MF INCOMING SENDER CIRCUIT

DESIG.	FUNCTIONAL MEANING
5BD	NO. FIVE BOARD
10A	TEN AUXILIARY
20C	20 CYCLE
20C1	20 CYCLE AUXILIARY
A $\frac{2}{5}$	'A' DIGIT REGISTER
AA0,1	'A' DIGIT TRANSLATION
AA4,7	'A' DIGIT TRANSLATION
AB0,1	'B' DIGIT TRANSLATION
AB4,7	'B' DIGIT TRANSLATION
ABC	ABC DIGITS CUT THROUGH
ABC1	ABC DIGITS CUT THROUGH AUXILIARY
AC0,1	'C' DIGIT TRANSLATION
ACT	A-C TRANSFER
ADR	'A' DIGIT REGISTERED
AS	'A' DIGIT INSTEERING
ASO	'A' DIGIT OUTSTEERING
AV	ADVANCE
AV1	ADVANCE AUXILIARY
B $\frac{2}{5}$	'B' DIGIT REGISTER
BD	BETWEEN DIGITS
BS	'B' DIGIT INSTEERING
BSO	'B' DIGIT OUTSTEERING
C $\frac{2}{5}$	'C' DIGIT REGISTER
CA	CONVERT 'A' DIGIT
CA1	CONVERT 'A' DIGIT AUXILIARY
CA4	COME AGAIN 4
CA4A	COME AGAIN 4 AUXILIARY
CA5	COME AGAIN 5
CA5A	COME AGAIN 5 AUXILIARY
CA6	COME AGAIN 6
CB	CONVERT 'B' DIGIT
CB1	CONVERT 'B' DIGIT AUXILIARY
CC	CONVERT 'C' DIGIT
CC1	CONVERT 'C' DIGIT AUXILIARY
CD	CONVERT 'D' DIGIT
CD1	CONVERT 'D' DIGIT AUXILIARY
CE	CONVERT 'E' DIGIT

DESIG.	FUNCTIONAL MEANING
CE1	CONVERT 'E' DIGIT AUXILIARY
CF	CONVERT 'F' DIGIT
CF1	CONVERT 'F' DIGIT AUXILIARY
CH	'C' HOLD
CH $\frac{2}{5}$	CODE CONVERSION HUNDREDS
CM	CLASS MARGINAL
CP	CLASS POLARIZED
CS	'C' DIGIT INSTEERING
CSO	'C' DIGIT OUTSTEERING
CT $\frac{2}{5}$	CODE CONVERSION TENS
CTA	CANCEL TIME ADVANCE
CTR	CANCEL TIME RELEASE
CTS	CLASS TIP SENSITIVE
CU $\frac{2}{5}$	CODE CONVERSION UNITS
D $\frac{2}{5}$	'D' DIGIT REGISTER
DC	D-C KEY PULSE
DC1,2	D-C KEY PULSE AUXILIARY
DDR	'D' DIGIT REGISTERED
DE1,2	DIGIT END
DLC	DELAYED LOOP CLOSURE
DP	DIAL PULSE
DP1	DIAL PULSE AUXILIARY
DRL	DECODER RELEASE
DRL1	DECODER RELEASE AUXILIARY
DS	'D' DIGIT INSTEERING
DSO	'D' DIGIT OUTSTEERING
DT	DOUBLE TEST
E $\frac{2}{5}$	'E' DIGIT REGISTER
EDR	'E' DIGIT REGISTERED
ES	'E' DIGIT INSTEERING
ESO	'E' DIGIT OUTSTEERING
EV	EVEN INSTEERING
EV1	EVEN INSTEERING AUXILIARY
EVO	EVEN OUTSTEERING
F $\frac{2}{5}$	'F' DIGIT REGISTERED
FDR	'F' DIGIT REGISTERED

DESIG.	FUNCTIONAL MEANING
FIF	FRAME IDENTIFICATION FAILURE
FKP	FALSE KEY PULSE
FL	FLASH
FL1	FLASH AUXILIARY
FP	FINAL PULSE
FS	'F' DIGIT INSTEERING
FSO	'F' DIGIT OUTSTEERING
FT	FUNDAMENTAL TRANSFER
FT1	FUNDAMENTAL TRANSFER AUXILIARY
G $\frac{2}{5}$	'G' DIGIT REGISTER
GS	'G' DIGIT INSTEERING
GSO	'G' DIGIT OUTSTEERING
H $\frac{2}{5}$	'H' DIGIT REGISTER
HS	'H' DIGIT INSTEERING
HSO	'H' DIGIT OUTSTEERING
J $\frac{2}{5}$	'J' DIGIT REGISTER
JS	'J' DIGIT INSTEERING
JSO	'J' DIGIT OUTSTEERING
K $\frac{2}{5}$	'K' DIGIT REGISTER
KD	KEY CIRCUIT DETECTOR
KP	KEY PULSE
KS	'K' DIGIT INSTEERING
KSO	'K' DIGIT OUTSTEERING
L $\frac{2}{5}$	'L' DIGIT REGISTER
LIT	LONG INCOMING TRUNK (Traffic separation)
LPD	LOOP DIAL
LS	'L' DIGIT INSTEERING
LSO	'L' DIGIT OUTSTEERING
LSS	LINE SEIZURE SIGNAL
M	MANUAL
M7	'M' REGISTRATION NO. 7 FREQUENCY
MB	MAKE BUSY
ME	MARKER ENGAGED

DESIG.	FUNCTIONAL MEANING
MF	MULTIFREQUENCY
MF1-3	MULTIFREQUENCY AUXILIARY
MFT	MULTIFREQUENCY TIMING (Before outpulsing)
MRL	MARKER RELEASE
MRL1	MARKER RELEASE AUXILIARY
MS	MARKER START
MS1,2	MARKER START AUXILIARY
MSO	'M' DIGIT OUTSTEERING (Operates SST)
MT	MARKER TRANSFER
MX	'M' STEERING (Start signal)
NSK	NO SKIP (All digits registered are to be outpulsed)
NV	NON VIA
NV1	NON VIA AUXILIARY
OD	ODD INSTEERING
OD1	ODD INSTEERING AUXILIARY
ODO	ODD OUTSTEERING
OE	OPERATOR'S ERROR
OF	OVERFLOW (Off hook)
OF1	OVERFLOW AUXILIARY
ON	OFF NORMAL
ON1	OFF NORMAL AUXILIARY
OP	OUTPULSE
OP1,2	OUTPULSE AUXILIARY
OSC	OUTSTEERING COCK
OT(TUBE)	OVERLOAD TIMING
OTC	OVERLOAD TIMING CONTROL
OTS	OVERLOAD TIMING START
P	PULSING
PA	PULSE COUNTING AUXILIARY (Outgoing)
PAO	PREFIX 'A' OUTSTEERING
PB	PULSE COUNTING (Outgoing)
PBO	PREFIX 'B' OUTSTEERING
PC	PULSE COUNTING AUXILIARY (Outgoing)
PC1-6	PULSE COUNTING (Outgoing)
PCK	PULSE CHECK
PCO	PREFIX 'C' OUTSTEERING
PD	PULSE COUNTING AUXILIARY (Outgoing)
PE	PULSE COUNTING AUXILIARY (Outgoing)
PFX/PFXB	PREFIX (Code conversion digits)
PFX1/PFXA	PREFIX AUXILIARY
PFXC	PREFIX AUXILIARY
PG	PULSE GENERATING
PG1	PULSE GENERATING AUXILIARY
PLK	PULSE LEAD CHECK
PP	PRELIMINARY PULSE A-C OUTPULSING

FUNCTIONAL DESIGNATIONS
SD-68222-01, ISSUE 17

RM 2-6

2 SHEETS, SHEET 1

NO. 4A TOLL

ISSUE 2 GRS
DATE 9-2-53

2 SHEETS, SHEET 1

MP-11657

BELL TELEPHONE LABORATORIES, INC.

ORDER AS BSP ITEM MP-11657

PRINTED IN U.S.A.

ISSUE	2	GRS
DATE	9-2-53	

SD-68222-01

MF INCOMING SENDER CIRCUIT (CONT.)

DESIG.	FUNCTIONAL MEANING
PP'	PRELIMINARY PULSE A-C OUTPULSING
PS	PULSE START
R	RING
R1	RING OUTPULSE
RA	REGISTER ADVANCE
RAR	RECEIVING ALTERNATE ROUTE
RAR1	RECEIVING ALTERNATE ROUTE AUXILIARY
RCG	RECYCLE GO
RCT	RECYCLE TIME
RO	REORDER
ROR	REORDER REQUESTED
ROR1	REORDER REQUESTED AUXILIARY
RR $\frac{2}{5}$	RECAPTURE RING
RSS	RECORD STUCK SENDER
RST	RECEIVED START
RST1, 2	RECEIVED START AUXILIARY
RT	RELAY TRANSFER
RT $\frac{2}{5}$	RECAPTURE TIP
S	SLEEVE
S1	SLEEVE AUXILIARY
SA	SENDER ATTACHED
SA1	SENDER ATTACHED AUXILIARY
SAR	SEND ALTERNATE ROUTE
SAR1, 2	SEND ALTERNATE ROUTE AUXILIARY
SG1, 2	STOP-GO AUXILIARY
SK3	SKIP 3 (Outpulsing starts at 4th registered digit except on code conversion calls)
SK6	SKIP 6 (4A only)
SL	SLEEVE OUT
SL1	SLEEVE OUT AUXILIARY
SP	INCOMING TRUNK SPLIT
SP1	INCOMING TRUNK SPLIT AUXILIARY
SRM	SENDER RECORD MADE
SST1	SEND START AUXILIARY
SXD	SIMPLEX DIAL
SXR	SIMPLEX RING
SXR1	SIMPLEX RING AUXILIARY
SY	SYNCHRONIZING
SYN	SYNCHRONIZING
T1	TIP OUTPULSE
TC3	TIMING COMPLETED 300 MS
TC5	TIMING COMPLETED 500 MS
TCA	TIMING COMPLETED (DLC timing)
TEN	TEN

DESIG.	FUNCTIONAL MEANING
TG	TRUNK GUARD (On-hook)
TG1	TRUNK GUARD AUXILIARY
TGT	TRUNK GUARD TIMING
TGT1	TRUNK GUARD TIMING AUXILIARY
TI	TROUBLE INDICATOR
TKS	TRUNK SELECTED
TKS1, 2	TRUNK SELECTED AUXILIARY
TL	TOLL
TM	TIP MARGINAL
TM0-9	TIMING
TNI	TRUNK NUMBER INDICATOR
TP	TIP POLAR
TR	TROUBLE RECORD
TRL	TROUBLE RELEASE
TS	TIP SENSITIVE
TST	TEST
TST1	TEST AUXILIARY
TX	TX
TXA	TX AUXILIARY
VO	VIA ONLY
W	PART OF W-Z RELAY COMBINATION CIRCUIT
WR	PART OF W-Z RELAY COMBINATION CIRCUIT
XDD	EXPECT DELAY IN DIALING
XSG	EXPECT STOP-GO
Z	PART OF W-Z RELAY COMBINATION CIRCUIT

FUNCTIONAL DESIGNATIONS
SD-68222-01, ISSUE 17

NO. 4A TOLL

2 SHEETS, SHEET 2 RM 2-6

MP-11658

SD-68230-01
INTERTOLL OR TOLL TANDEM INCOMING TRUNK CIRCUIT - MF

DESIG.	FUNCTIONAL MEANING
CO	CUT-OFF
IN	INCOMING CALL
IR	INCOMING RING
LC	LINE CLOSURE
SP	SPLITTING
SV	SUPERVISORY
TM(Tube)	TIMING

SD-68232-01
2-WAY INTERTOLL TRUNK CIRCUIT - DP INCOMING

DESIG.	FUNCTIONAL MEANING
CO	CUT-OFF
G	GUARD
IR	INCOMING RINGING
LC	LINK CONTROL (Grounds start lead sender link and connector circuit)
LO	LOCKOUT
OS	OUT SEIZURE
OS1	OUT SEIZURE AUXILIARY
R	RINGING (Forward)
SL	SENDING LEAD CONTROL
SP	SPLITTING
SVP	SUPERVISORY AND PULSING - ALSO RINGING ON OUTGOING CALL, AUXILIARY TO R RELAY
TM(Tube)	TIMING

SD-68233-01
2-WAY INTERTOLL TRUNK CIRCUIT - MF INCOMING

DESIG.	FUNCTIONAL MEANING
CO	CUT-OFF
G	GUARD
IR	INCOMING RING
LC	LINE CLOSURE
LO	LOCKOUT
OS	OUT SEIZURE
OS1	OUT SEIZURE AUXILIARY
R	RINGING (Forward)
SL	SENDING LEAD CONTROL
SP	SPLITTING
SVP	SUPERVISORY AND PULSING
TM(Tube)	TIMING

SD-68334-01
SENDER LINK AND CONNECTOR CIRCUIT

DESIG.	FUNCTIONAL MEANING
A	"A" CHOICE CONNECTOR BUSY
AL	ALARM
AR1	CONNECTOR RELEASE, A SIDE
AR2	CONNECTOR RELEASE, B SIDE
B	"B" CHOICE CONNECTOR BUSY
CA-C	CONTROL (Connector control leads of link frame to controller connector circuit)
D-	DIVIDE START LEADS
DT-	DOUBLE TEST CONNECTOR
EA	EXERCISE A
EB	EXERCISE B
FC-	FIRST CONNECTOR
L	LOCKOUT
LC	CONNECTOR CHOICE LOCKOUT
MC	MULTICONTACT CUT-IN
P(Hold)	PRIMARY HOLD MAGNET
P'(Hold)	PRIMARY HOLD MAGNET
P(Sel)	PRIMARY SELECT MAGNET
P'(Sel)	PRIMARY SELECT MAGNET
PC	PREFERENCE CHAIN
PF	PREFERENCE
PU	PICK-UP (Alarm)
RA	RELEASE ALARMS
S(Hold)	SECONDARY HOLD MAGNET
S'(Hold)	SECONDARY HOLD MAGNET
S(Sel)	SECONDARY SELECT MAGNET
S'(Sel)	SECONDARY SELECT MAGNET
SC	SECOND CONNECTOR
SGB	SENDER GROUP BUSY
ST-	START
TC	TIMED PREFERENCE CHAIN
TL-	TEST LOWER LEVELS
TL0,1	TEST LOWER LEVELS
TM	TIMING
TM1	TIMING AUXILIARY
TU	TEST UPPER LEVELS
TU0,1	TEST UPPER LEVELS

SD-68336-01
CONTROLLER CONNECTOR CIRCUIT

DESIG.	FUNCTIONAL MEANING
AL	ALARM
B1,2	BUSY INDICATION
CA1,2	CONTROLLER CUT-IN
CB1,2	CONTROLLER CUT-IN
CBR	CONNECTOR BUSY (For maintenance purposes)
CBT	CONTROLLER BUSY TEST
CC1,2	CONTROLLER CUT-IN
CR	CONNECTOR RELEASE (Connector time-out)
CS	CONTROLLER SELECTED
CSA	CONNECTOR START
LA1,2	LINK FRAME LOCKOUT
OC	OCCUPIED CONNECTOR
PC1,2	PREFERENCE CHANGE
PU	PICK-UP (Alarm)
TC	TEST CALL

ISSUE	1	GGS
DATE	6-20-51	R.B.B.

FUNCTIONAL DESIGNATIONS
SD-68230-01, ISSUE 4
SD-68232-01, ISSUE 9
SD-68233-01, ISSUE 11
SD-68334-01, ISSUE 11
SD-68336-01, ISSUE 5

RM 2-7

NO. 4A TOLL

MP- 11659

ISSUE	2	4	5	6	3	4	5
DATE	7-15-53	1-15-54			10-5-53		

SD-68339-01

DECODER CONNECTOR CIRCUIT

DESIG.	FUNCTIONAL MEANING
ADB	ALL DECODERS BUSY
CA1-6	CONNECTOR ALARM
CB	CONNECTOR BUSY
CF	CARD FAILURE
CHK	CHECK
DC	DECODER CUT-IN
DC1	DECODER CUT-IN AUXILIARY
DP	DECODER PREFERENCE
GR	GROUND DETECTION
GR1	GROUND DETECTION
GR2-4	GROUND DETECTION AUXILIARIES
GRA	GROUND DETECTION AUXILIARY
GS	GROUND SUPPLY
GT	GATE
GT1	GATE AUXILIARY
MC	MARKER CUT-IN
MTA	MARKER TRAIN A
MTB	MARKER TRAIN B
RLT	RELEASE TRANSFER
RLT1	RELEASE TRANSFER AUXILIARY
RO	REORDER
RO1	REORDER AUXILIARY
SC	SENDER CUT-IN
SC1	SENDER CUT-IN AUXILIARY
SMB	SENDER GROUP MAKE BUSY
SP	SENDER PREFERENCE
TI	TROUBLE RECORDER
TR	TROUBLE RELEASE
TR1	TROUBLE RELEASE AUXILIARY

FUNCTIONAL DESIGNATIONS
SD-68339-01, ISSUE 6

NO. 4A OR 4M TOLL

RM 2-8

DECODER CIRCUIT

DESIG.	FUNCTIONAL MEANING
3D	3 DIGIT SIGNAL FROM SENDER
3DB	3 DIGIT CARD GROUP
5BD	NO. 5 BOARD SIGNAL FROM SENDER
6D	6 DIGIT SIGNAL FROM SENDER
6DA	6 DIGITS AVAILABLE IN SENDER
6DB	6 DIGIT CARD GROUP
6DT	6 DIGIT TRANSLATION
AC	AREA CODE
AFA	ALTERNATE, FOREIGN AREA
AHA	ALTERNATE, HOME AREA
ARB	ALTERNATE ROUTE CARD GROUP
ARS	ALTERNATE ROUTE SELECTED
ARST	ALTERNATE ROUTE START
ART $\frac{2}{5}$	ALTERNATE ROUTE TENS
ARU $\frac{2}{5}$	ALTERNATE ROUTE UNITS
ATB	ALL TRUNKS BUSY
BD	BUSY DECODER
BNA-C	BOX NUMBER START (0-9) LEADS
BND-F	BOX NUMBER START (10-19) LEADS
BTO, 1	BOX TENS NUMBER
BU $\frac{2}{5}$	BOX UNITS NUMBER
BU $\frac{2'}{5}$	BOX UNITS WORKS RELAYS
CA	COME AGAIN BATTERY SUPPLY
CA4-6	COME AGAIN 4, 5 OR 6 DIGITS
CAH	COME AGAIN HOLD
CAK	COME AGAIN CHECK
CB	CONNECTOR BUSY RELAY
CBR-W	CONNECTOR BUSY RELAYS
CBR1-W1	CONNECTOR BUSY RELAYS
CBR2-W2	CONNECTOR BUSY RELAYS
CC	CARD TO CARD
CCA	CODE CONNECTOR ALTERNATE
CCH $\frac{2}{5}$	CODE CONVERSION HUNDREDS
CCHN	NO CODE CONVERSION HUNDREDS
CC1-5	CODE CUT-IN RELAYS
CCM	CODE CONVERSION BATTERY SUPPLY
CCT $\frac{2}{5}$	CODE CONVERSION TENS
CCTN	NO CODE CONVERSION TENS
CCU $\frac{2}{5}$	CODE CONVERSION UNITS
CCUN	NO CODE CONVERSION UNITS
CDC $\frac{2}{5}$	CONTINUITY AND DIGIT CONTROL
CFM	CARD FAILURE MEMORY
CFR, CFR1, 2	CARD FAILURE RECORDING
CI0-5	GROUND SUPPLY CUT-IN RELAYS
CK1-3	INTEGRITY CHECK SENDER-DECODER LEADS
CKG, CKG1, 2	DECODER OFF-NORMAL GROUND SUPPLY AND START CIRCUIT
CO	CUT-OFF TRUNK SUBGROUP TEST
COP1, 2	CARD OPERATED INDICATION
CR	CARD TO RELAY
CR0-4	'CARD TO RELAY' ROUTE RELAY TENS (00-49)
CR5-9	'CARD TO RELAY' ROUTE RELAY TENS (50-99)
CRA	CR RELAY AUXILIARY
CRK	CROSS RELAY CHECK
CRP	'CARD TO RELAY' PREFERENCE
DA1-3	DECODER PREFERENCE CHAIN ALARM
DBS, DBS1-4	DUPLICATE BOX SHIFT
DCB, DCB1, 2	DISCONNECT CODE BARS
DCBA	DCB AUXILIARY
DFB	DECODER FOREIGN BOX
DFE	DECODER FOREIGN EMERGENCY
DFTR	DECODER FOREIGN TRANSLATOR CONNECTOR
DL	DISPLAY LOST
DRL	DECODER RELEASE
FAT	FOREIGN AREA TRANSLATOR BATTERY SUPPLY
FATH	FOREIGN AREA TRANSLATOR HOLD
FC2-15	DECODER FOREIGN CONNECTOR RELAYS
FMB	FOLLOW WITH MASTER BUSY
FNT	FOREIGN TRANSLATION NO TEST FEATURE
FOF	FOLLOW WITH OVERFLOW
FRO	FOLLOW WITH REORDER
FST	FOLLOW WITH SECOND TRIAL
*FTD	FOREIGN AREA DELAY TIMING
FTD1	FOREIGN AREA DELAY TIMING AUXILIARY
G0-3	SUBGROUP CHAIN TEST RELAYS
GB	ALL SUBGROUPS BUSY
GPL	SUBGROUP LOCK
HB	HOME BOX - 6 DIGIT TRANSLATION IN HOME BOX
HBA	HOME BOX AUXILIARY
HBI	HOME BOX INDICATED
HC1-16	HOME CONNECTOR CUT-IN
HE	HOME EMERGENCY
HTK	HOME TRANSLATOR CHECK
HTR	HOME TRANSLATOR CONNECTOR
HVC	HOLD CARD ON VACANT CODE ROUTING
IT	INTERTOLL MARKER
IT1, 2	INTERTOLL MARKER AUXILIARIES
ITC	INTERTOLL OR TOLL COMPLETING MARKER
MBU $\frac{2}{5}$	BOX NUMBER MERCURY UNITS
MCCH	MATCH CODE CONVERSION HUNDREDS
MCCT	MATCH CODE CONVERSION TENS
MCCU	MATCH CODE CONVERSION UNITS
*MD	MARKER DELAY TIMING
MD1	MARKER DELAY TIMING AUXILIARY
ME	MARKER ENGAGED
MKR	BATTERY SUPPLY - MARKER SELECTION RELAYS
NAC	NO AREA CODE
NC	NO CARD DROPPED
NCA	NO COME AGAIN
NCT, NCT1	NO CARD TIMING
NPCR	NO PRINCIPAL CITY ROUTE
NRO	NO REORDER SIGNAL
NSK	NO SKIP SIGNAL TO MARKER
NVO	NVO CODE BAR OPERATED
OAT, OAT1	OVER-ALL TIMING
OC, OC1-10	OUTPUT CONTROL
OCT	OUTPUT CHANNEL TEST
OFCR	OVERFLOW TRAFFIC REGISTER CONTROL - CARD TO RELAY OPERATION
ORF	OVER REGISTRATION FAILURE
OGT	OUTGOING TRUNK TEST
PCR, PCR1-4	PRINCIPAL CITY ROUTING
PF	PREFERENCE - CONNECTOR
PRO	OVERLOAD ANNOUNCEMENT SIGNAL FROM SENDER
R00-99	ROUTE RELAYS
R6D, R6D1	6D CARD
RA, RA1-3	ROUTE ADVANCE
RAMB	ROUTE ADVANCE TO MASTER BUSY
RARO	ROUTE ADVANCE TO REORDER
RAV0-5	ROUTE ADVANCE TO SUCCEEDING GROUND SUPPLY
RAVO'-5'	ROUTE ADVANCE TO SUCCEEDING GROUND SUPPLY
RB0-5	ROUTE BUSY
RC, RC1, 2	TROUBLE RECORDER CUT-IN
RCA, RCA1	RESTORE CARD AND ADVANCE
RCC	BATTERY SUPPLY FOR ALTERNATE ROUTE PATTERN RELAYS
RCD	RESTORE CARD AND DISCONNECT
RCRR	RESTORE CARD - 'RELAY TO RELAY'
REC	RECORDING SIGNAL FROM TROUBLE RECORDER
RHC	RESTORE HOME CONNECTOR
RI	BATTERY SUPPLY FOR ROUTING INSTRUCTION RELAYS
RI $\frac{2}{5}$	ROUTING INSTRUCTION
RIH	ROUTING INSTRUCTION HOLD
RLS	RELEASE OF SUBGROUP CI-RELAY
RLT	RELEASE AFTER TRANSLATION
RO	REORDER SIGNAL
ROIT	REORDER 'IT'
ROMB	REORDER OR MASTER BUSY
ROTC	REORDER 'TC'
RPRO	RECORD OVERLOAD ANNOUNCEMENT
RR	'RELAY TO RELAY'
RR0-4	'RELAY TO RELAY' ROUTE RELAY SELECTION (00-49)
RR5-9	'RELAY TO RELAY' ROUTE RELAY SELECTION (50-99)
RRA	RR RELAY AUXILIARY
RRP	'RELAY TO RELAY' PREFERENCE
RSR	RECORD SENDER REORDERS
RT, RT1	TROUBLE RECORD AND TEST RELAYS
RTRF	ROUTE TRANSFER OPERATION
RYT, RYT1	RECYCLE WORK TIME
SDT, SDT1	DECODER OPERATION ON SENDER TEST
SMC, SMC1, 2	INCOMING TRUNK ON 'TC' TRAIN
SMCO	'SM' LEAD CUT-OFF
SMI, SMI1, 2	INCOMING TRUNK ON 'IT' TRAIN
SS	STUCK SENDER REQUEST
STI	START TROUBLE RECORDER
SWT	START WORK TIME
SWT1	WORK TIME ELAPSED

*RELAY AND TUBE

FUNCTIONAL DESIGNATIONS
SD-68340-01, ISSUE 8

RM 2-9 2 SHEETS, SHEET 1 | NO. 4A OR 4M TOLL

ORDER AS BSP ITEM MP- 11660

BELL TELEPHONE LABORATORIES, INC.

PRINTED IN U.S.A.

ISSUE 2 12-2-53
DATE 12-31-53

2 SHEETS, SHEET 1

MP-11660

ISSUE	2	2
DATE	12-31-53	

SD-68340-01

DECODER CIRCUIT (CONT.)

DESIG.	FUNCTIONAL MEANING
TAL	TIME ALARM
TB 2/5	TRUNK BLOCK
*TBD	TRUNK BLOCK DELAY TIMING
TBD1	TRUNK BLOCK DELAY TIMING AUXILIARY
TBY, TBY1	FOREIGN AREA TRANSLATOR PLUGGED BUSY
TC, TC1, 2	TOLL COMPLETING MARKER
TCD1, 2	TRANSFER CODE DIGITS
TCF	TRUNK BLOCK CONNECTOR FAILURE
TCK	TRANSLATOR CONNECTOR CHECK
TCT0-2	TRUNK BLOCK CONNECTOR TENS
TCU 2/5	TRUNK BLOCK CONNECTOR UNITS
TGS	'G' LEADS TRANSFER RELAY FOR TROUBLE RECORDER TEST
TID, TID1	TRANSLATOR IDLE INDICATION
TKS	TRUNK SELECTED
TPC	THROUGH TRAFFIC PEG COUNT
TR, TR1	TROUBLE RECORDER CONTROL
TR1A	DECODER INDICATES FIRST TRIAL
TR2A, B, C	DECODER INDICATES SECOND TRIAL
TRA	TROUBLE RECORDER TIME-OUT ALARM
TRB, TRB1	TROUBLE RECORDER BUSY OR COMPLETION
TRL	TROUBLE RELEASE
*TRT	TROUBLE RECORDER TIMING
TRT1	TROUBLE RECORDER TIMING AUXILIARY
TS0-2	TRAFFIC SEPARATION PEG COUNT (Outgoing trunk group)
TSA-C	TRAFFIC SEPARATION PEG COUNT (Incoming trunk group)
TSG1-4	TRAFFIC SEPARATION PEG COUNT CONTROL
TST, TST1	TROUBLE RECORDER TEST CALL
VCR1, 2	VACANT CODE ROUTING
VO	'VO' CODE BAR OPERATED
WT(Tube)	WORK TIMING
X6DT	CROSS CHECK ON '6DT' LEAD
XCA	CROSS CHECK ON 'CA' LEADS
XCF	CROSS CHECK ON 'CF' LEAD
XCO	CROSS CHECK CUT-OFF RELAY FOR 'XDRL' AND 'XCA'
XDRL	CROSS CHECK ON 'DRL' LEAD
XIK	CROSS CHECK INTEGRITY OF '5BD' 'CFM' 'PF', 'TSA' 'TSB' AND 'TSC' LEADS
XREC	CROSS CHECK ON 'REC' LEAD
XRLT	CROSS CHECK ON 'RLT' LEAD
XTRB	CROSS CHECK ON 'TRB' LEAD
XTRL	CROSS CHECK ON 'TRL' LEAD

*RELAY AND TUBE

FUNCTIONAL DESIGNATIONS
SD-68340-01, ISSUE 8

MP-11661

SD-68341-01
TRANSLATOR CONNECTOR CIRCUIT

DESIG.	FUNCTIONAL MEANING
C	CONNECTOR
CO-2	CONNECTOR AUXILIARIES
EMC	EMERGENCY CONNECTOR
EME, EME	EMERGENCY (Even)
EMO, EMO	EMERGENCY (Odd)
LO, LO	LOCKOUT
P-	DECODER PREFERENCE

SD-68342-01
CARD TRANSLATOR CIRCUIT

DESIG.	FUNCTIONAL MEANING
6DK	6 DIGITS CHECK
**A $\frac{2}{5}$	'A' DIGIT
AC(Tube)	AREA CODE
AFA(Tube)	ALTERNATE, FOREIGN AREA
AHA(Tube)	ALTERNATE, HOME AREA
ALM	ALARM
ARC	AUTOMATIC RESTORE OF CARD
ART$\frac{2}{5}$ (Tube)	ALTERNATE ROUTE TENS
ARU$\frac{2}{5}$ (Tube)	ALTERNATE ROUTE UNITS
**B $\frac{2}{5}$	'B' DIGIT
BTO, 1(Tubes)	BOX TENS NUMBER
BU $\frac{2}{5}$ (Tubes)	BOX UNITS NUMBER
BZ	BUZZER CONTROL
**C $\frac{2}{5}$	'C' DIGIT
CA4-6(Tubes)	COME AGAIN 4, 5 OR 6 DIGITS
CBK	CODE BAR CHECK
CCH $\frac{2}{5}$ (Tubes)	CODE CONVERSION HUNDREDS
CCHN(Tube)	NO CODE CONVERSION HUNDREDS
CCT $\frac{2}{5}$ (Tubes)	CODE CONVERSION TENS
CCTN (Tube)	NO CODE CONVERSION TENS
CCU$\frac{2}{5}$ (Tubes)	CODE CONVERSION UNITS

SD-68342-01 (CONTD.)
CARD TRANSLATOR CIRCUIT

DESIG.	FUNCTIONAL MEANING
CCUN (Tube)	NO CODE CONVERSION UNITS
CDC $\frac{2}{5}$ (Tubes)	CONTINUITY AND DIGIT CONTROL
CDLC (Tube)	CANCEL DELAYED LOOP CLOSURE
**CGO, 1, 2, 4	CARD GROUP
CKL(Crank Lock)	CRANK LOCK
CLTO, 1(Tubes)	CLASS TENS
CLU$\frac{2}{5}$ (Tubes)	CLASS UNITS
CON	CONNECTOR OFF NORMAL
***CS1, 2	CARD SUPPORT CONTROL
CSL	CARD SUPPORT LIFT
CSL1, 2(Mag's)	CARD SUPPORT LIFT
**D$\frac{2}{5}$	'D' DIGIT
DIM	DIM EXCITER LAMP
**E$\frac{2}{5}$	'E' DIGIT
**F$\frac{2}{5}$	'F' DIGIT
GETO, 1 (Tubes)	GROUP END TENS
GEU$\frac{2}{5}$(Tubes)	GROUP END UNITS
GSTO, 1(Tubes)	GROUP START TENS
GSU$\frac{2}{5}$ (Tubes)	GROUP START UNITS
HB(Tube)	HOME BOX
HE	HOME EMERGENCY
*IND1, 2	INDEX CHANNEL
IT (Tube)	INTERTOLL
ITC(Tube)	TOLL COMPLETING
L1-4 (Latches)	LATCH
LCH	LATCH
MOC	MANUAL OPERATIONS CONTROL
MOC1-4	MANUAL OPERATIONS CONTROL AUXILIARIES
NAC(Tube)	NO AREA CODE
NCA (Tube)	NO COME AGAIN
NSK(Tube)	NO SKIP
**NVO	NON-VIA ONLY
PD	PULL DOWN
PD1-8(Magnets)	PULL DOWN
PDS1-8	PULL DOWN SLAVE
PU1, 2	PULL UP
PU1-8 (Magnets)	PULL UP
PUS1-8	PULL UP SLAVE

SD-68342-01 (CONTD.)
CARD TRANSLATOR CIRCUIT

DESIG.	FUNCTIONAL MEANING
R1, 2(Tubes)	RECTIFIERS
RD	READ CARDS
RI $\frac{2}{5}$ (Tubes)	ROUTING INSTRUCTION
RT	RECORD AND TEST
RT1-4	RECORD AND TEST AUXILIARIES
SA $\frac{2}{5}$	SLAVE RELAYS - 'A' DIGIT
SB $\frac{2}{5}$	SLAVE RELAYS - 'B' DIGIT
SC $\frac{2}{5}$	SLAVE RELAYS - 'C' DIGIT
SCGO, 1, 2, 4	SLAVE RELAYS - CARD GROUP
SCS1, 2	SLAVE RELAYS - CARD SUPPORT
SD $\frac{2}{5}$	SLAVE RELAYS - 'D' DIGIT
SE $\frac{2}{5}$	SLAVE RELAYS - 'E' DIGIT
SF $\frac{2}{5}$	SLAVE RELAYS - 'F' DIGIT
SK3 (Tube)	SKIP 3 DIGITS
SK6(Tube)	SKIP 6 DIGITS
SNVO	SLAVE RELAY - NON-VIA ONLY
SR	SLOW RELEASE
SVO	SLAVE RELAY - VIA ONLY
TB $\frac{2}{5}$ (Tubes)	TRUNK BLOCK
TC(Tube)	TOLL COMPLETING MARKER
TCTO-2(Tubes)	TRUNK BLOCK CONNECTOR TENS
TCU $\frac{2}{5}$(Tubes)	TRUNK BLOCK CONNECTOR UNITS
TOS	TRANSLATOR OUT OF SERVICE
TPO-2(Tubes)	TRAFFIC PEG COUNT
TPC (Tube)	THROUGH TRAFFIC PEG COUNT
TSO-2(Tubes)	TRAFFIC SEPARATION PEG COUNT
**VO	VIA ONLY

*Relay and Tube
**Relay and Code Bar Magnet
***Relay and Card Support Magnet

ISSUE	2	GRS
DATE	10-26-53	R.E.C.

FUNCTIONAL DESIGNATIONS
SD-68341-01, ISSUE 6
SD-68342-01, ISSUE 7

NO. 4A OR 4M TOLL

RM 2-10

MARKER CIRCUIT

DESIG.	FUNCTIONAL MEANING
0DG	NO NUMERICAL DIGITS
4DG	4 NUMERICAL DIGITS
5DG	5 NUMERICAL DIGITS
ABL0-9	"A" AND "B" LINK NUMBER - LEFT
ABR0-9	"A" AND "B" LINK NUMBER - RIGHT
AC	"A" AND "C" CHANNEL TEST
AC1	"A" AND "C" CHANNEL TEST AUXILIARY
AK	"A" LINK CHECK
AK1	"A" LINK CHECK AUXILIARY
ATB	ALL TRUNKS BUSY
B	"B" LINK CONTINUITY AND FALSE GROUND TEST
BK	"B" LINK (Junctor) CHECK
BM	BUSY MARKER
CBR	CONNECTOR BUSY
CCH $\frac{2}{5}$	CODE CONVERSION HUNDREDS
CCHA,B	CODE CONVERSION HUNDREDS CHECK
CCHN	NO CODE CONVERSION HUNDREDS
CCT	CHANGE AND CANCEL CONTINUITY TEST
CCT $\frac{2}{5}$	CODE CONVERSION TENS
CCTA,B	CODE CONVERSION TENS CHECK
CCTN	NO CODE CONVERSION TENS
CCU $\frac{2}{5}$	CODE CONVERSION UNITS
CCUA,B	CODE CONVERSION UNITS CHECK
CCUN	NO CODE CONVERSION UNITS
CDA	CONTINUITY AND DIGIT "A" CHECK
CDLC	CANCEL DELAYED LOOP CLOSURE
CHB	ALL CHANNELS BUSY
CHE	CHANNEL END (Selected)
CHL0-9	CHANNEL NUMBER - LEFT
CHR0-9	CHANNEL NUMBER - RIGHT
CHT	CHANNEL TIMING
CHTK	CHANNEL TIMING CHECK
CK	"C" LINK CHECK
CKG	CIRCUIT GROUNDING
CKGA	CIRCUIT GROUNDING AUXILIARY

DESIG.	FUNCTIONAL MEANING
CL0-2	CLASS
CL5-7	CLASS
CL8-13	CLASS (X and Y options)
CL14	CLASS
CLA-C	CLASS CHECK
CLCT	CANCEL LOOP CONTINUITY TEST
CLT0,1	CLASS TENS
CLU $\frac{2}{5}$	CLASS UNITS
CNE	CONNECTOR EVEN
CNO	CONNECTOR ODD
COF	CHANNEL OVERFLOW
CON1,3	CONTINUITY
CONA,B	CONTINUITY TEST
CPL0-9	"C" LINK NUMBER - LEFT
CPR0-9	"C" LINK NUMBER - RIGHT
DA1-3	PREFERENCE CHAIN ALARM
DE	DECODER ENGAGED
DFP	DETECT FALSE PULSE FREQUENCY
DGA	DIGIT CONTROL CHECK
DL	DELAY
FA-FF	FREQUENCY DETECTED
FA1-FF1	FREQUENCY CHECKED
FA2-FF2	FREQUENCY TRANSLATED
FG,FH	FREQUENCY DETECTED (V option)
FG1,FH1	FREQUENCY CHECKED (V option)
FG2,FH2	FREQUENCY TRANSLATED (V option)
FMB	FOLLOW WITH MASTER BUSY
FOF	FOLLOW WITH OVERFLOW
FOFA	FOLLOW WITH OVERFLOW AUXILIARY
FRO	FOLLOW WITH REORDER
FST	FOLLOW WITH SECOND TRIAL
GCK	TRUNK GROUP CUT-OFF CHECK
GE1-39 (Odd)	GROUP END
GET0,1	GROUP END TENS RECEIVING LEADS CUT-IN
GEU $\frac{2}{5}$	GROUP END UNITS RECEIVING LEADS CUT-IN
GS0-38 (Even)	GROUP START
GST0,1	GROUP START TENS RECEIVING LEADS CUT-IN
GSU $\frac{2}{5}$	GROUP START UNITS RECEIVING LEADS CUT-IN

DESIG.	FUNCTIONAL MEANING
HLD	HOLD (For other route information)
HMT	HOLD MAGNET TIMING
HMT1	HOLD MAGNET TIMING AUXILIARY
I0-19	INCOMING FRAME
IA0-19	INCOMING FRAME AUXILIARIES
ICB	INCOMING CONNECTOR BUSY
ICK	INCOMING CONNECTOR CHECK
ICO	INCOMING FRAME IDENTIFICATION CUT-IN
IC1,2	INCOMING FRAME IDENTIFICATION CUT-IN AUXILIARIES
ID	INCOMING FRAME IDENTIFICATION
IEV	INCOMING FRAME EVEN
IEV1	INCOMING FRAME EVEN AUXILIARY
IFK	INCOMING FRAME CHECK
IL	INCOMING IDENTIFIER LOCK
ILA	INCOMING IDENTIFIER LOCK AUXILIARY
IOD	INCOMING FRAME ODD
IOD1	INCOMING FRAME ODD AUXILIARY
JC0-19	JUNCTOR CUT-IN
JP0-17	JUNCTOR PATTERN
JPN	NORMAL JUNCTOR PATTERN (U option)
K0-39	TRUNK SELECTED
LCON	LOOP CONTINUITY (X and Y options)
LPD	LOOP DIAL (X and Y options)
MB	MASTER BUSY
MBR	MASTER BUSY ROUTE
MFF	MULTIFREQUENCY FAILURE
MFT	MULTIFREQUENCY TRANSFER
MLCT	MAKE CONTINUITY TEST (X and Y options)
MSC	MARKER SLEEVE CONTROL
NDG	NO DIGIT CONTROL
NSK	NO SKIP
O0-19	OUTGOING FRAME
OAT	OVER-ALL TIMER
OAT1,2	OVERALL TIMER AUXILIARIES
OC0	OUTGOING FRAME IDENTIFICATION CUT-IN
OC1,2	OUTGOING FRAME IDENTIFICATION CUT-IN AUXILIARIES
OCB	OUTGOING CONNECTOR BUSY
OCK	OUTGOING CONNECTOR CHECK
OCK1	OUTGOING CONNECTOR CHECK AUXILIARY
OD	OUTGOING FRAME IDENTIFICATION

DESIG.	FUNCTIONAL MEANING
OEV	OUTGOING FRAME EVEN
OEV1	OUTGOING FRAME EVEN AUXILIARY (W option)
OF	OVERFLOW
OFK	OUTGOING FRAME CHECK
OGT	OUTGOING TRUNK TEST
OL	OUTGOING FRAME LOCK
OLA	OUTGOING FRAME LOCK AUXILIARY
ONB	OFF NORMAL BATTERY
ONG	OFF NORMAL GROUND
ONG1	OFF NORMAL GROUND AUXILIARY
OOD	OUTGOING FRAME ODD
OOD1	OUTGOING FRAME ODD AUXILIARY (W option)
OVA-D	JUNCTOR SUBGROUP OVERFLOW AUXILIARIES
PC	PEG COUNT
PC1,2	PEG COUNT AUXILIARIES
RC	DECODER-MARKER TEST AND TROUBLE RECORDER CUT-IN
RC1-4	DECODER-MARKER TEST AND TROUBLE RECORDER CUT-IN AUXILIARIES
RCD	READ CARD
RCD1,2	READ CARD AUXILIARIES
RCK	REGISTRATION CHECK
RCT	RECYCLE TIMING
RCT1	RECYCLE TIMING AUXILIARY
REC	TROUBLE RECORDER SEIZED
RL	RELEASE
RO	REORDER
ROB	REORDER TRUNKS BUSY
ROR	REORDER ROUTE
RS1-4	ROUTE SWITCHING
RT,RT1	TROUBLE RECORDER CUT-IN
RTA-D	ROTATE JUNCTOR SUBGROUP CHOICE
RTA'-D'	ROTATE JUNCTOR SUBGROUP CHOICE
SAR	SEND AS RECEIVED
SCT	SLEEVE CONTINUITY TEST
SCT1	SLEEVE CONTINUITY TEST AUXILIARY
SG	SLEEVE GUARD
SGA	SLEEVE GUARD AUXILIARY
SGA1	SLEEVE GUARD AUXILIARY
SK	SELECT MAGNET LOCKOUT CHECK
SK3	SKIP AREA CODE - SPILL OFFICE CODE
SK6	SKIP 6 - NO OFFICE CODE DIGITS
SKA	SKIP CHECK
SMT	SELECT MAGNET TRANSFER

FUNCTIONAL DESIGNATIONS
SD-68388-01, ISSUE 2

RM 2-11 2 SHEETS, SHEET 1

NO. 4A TOLL

ORDER AS BSP ITEM MP-11662

BELL TELEPHONE LABORATORIES, INC.

PRINTED IN U.S.A.

MP-11662 2 SHEETS, SHEET 1

ISSUE 1 GGS
DATE 6-20-51
R.B.B.

ISSUE	1	GGS
DATE	6-20-51	R.B.B.

DESIG.	FUNCTIONAL MEANING
SPT	STOP TIMING
SRL	SENDER RELEASE
SS	STUCK SENDER
STI	SEIZE TROUBLE RECORDER
T0-39	TRUNK BUSY TEST
TB	TRUNKS BUSY (Alternate available)
TB $\frac{2}{5}$	TRUNK BLOCK RELAY
TB2K	TWO "TB" RELAY CHECK
TBK	TRUNK BLOCK CHECK
TC0-29	TRUNK BLOCK CONNECTOR
TCB	TRUNK BLOCK CONNECTOR BUSY
TCBA	TRUNK BLOCK CONNECTOR BUSY AUXILIARY
TCK	TRUNK BLOCK CONNECTOR CHECK
TCK1	TRUNK BLOCK CONNECTOR CHECK AUXILIARY
TKE	TRUNK "K" RELAY STABILIZER, TRUNK END
TKS	TRUNK SELECTED
TKT	TRUNK TEST TIMING
TKTK	TRUNK TEST TIMING CHECK
TM	TIME MEASURE
*TM1	TIME MEASURE AUXILIARY
TM1X	TIME MEASURE AUXILIARY
*TM2	TIMING - (Marker release after incoming frame check) - INCOMING FRAMES NOT EXTENDED
TM2X	TIMING - (Marker release after incoming frame check) - INCOMING FRAME NOT EXTENDED - AUXILIARY
*TM3	TIMING - (Marker release after incoming frame check) INCOMING FRAMES EXTENDED
TMR	TIME MEASURE RELEASE
TP0-2	TRUNK PEG COUNT AND OVERFLOW REGISTER CONTROL
TR	TROUBLE RECORDER
TR1	FIRST TRIAL
TR1A	FIRST TRIAL AUXILIARY
TR2	SECOND TRIAL
TR2A	SECOND TRIAL AUXILIARY
TRA	TROUBLE RECORDER ALARM
TRB	TROUBLE RECORDER INDICATES BUSY OR COMPLETION
TRL	TROUBLE RELEASE
*TRT	TROUBLE RECORDER TIMING

DESIG.	FUNCTIONAL MEANING
TRTX	TROUBLE RECORDER TIMING CROSS
TSA	TRUNK SELECTED CHECK
TST	TROUBLE RECORDER INDICATES TEST CALL
TSTA	TROUBLE RECORDER INDICATES TEST CALL AUXILIARY
X	MASTER CROSS
XCO	CROSS CUT-OFF
XCO1	CROSS CUT-OFF AUXILIARY
XCOA-C	CROSS CUT-OFF AUXILIARIES
XI	CROSS "I" RELAYS
XIA	CROSS "I" RELAYS AUXILIARY
XIS	CROSS INCOMING TRUNK SLEEVE
XILS	CROSS INCOMING LINK SLEEVE
XIPS	CROSS INCOMING PRIMARY SELECT MAGNET
XJP	CROSS JUNCTOR PATTERN (U option)
XJS	CROSS JUNCTOR SLEEVE
XK	CROSS CHECK RELAYS
XMRL	CROSS MARKER RELEASE LEAD
XMS	CROSS MARKER SLEEVE
XMS1	CROSS MARKER SLEEVE AUXILIARY
XO	CROSS "O" RELAYS
XOA	CROSS "O" RELAYS AUXILIARY
XOLS	CROSS OUTGOING LINK SLEEVE
XRCK	CROSS RCK LEAD
XSM	CROSS SELECT MAGNET LEAD
XSM1	CROSS SELECT MAGNET INCOMING SECONDARY
XSMO	CROSS SELECT MAGNET OUTGOING PRIMARY
XSMT	CROSS SELECT MAGNET TEST
XST	CROSS START LEAD
XSTR	CROSS STRL LEAD
XTB	CROSS TRUNK BLOCK RELAY
XTB1	CROSS TRUNK BLOCK RELAY AUXILIARY
XTIF	CROSS INCOMING START LEAD
XTKS	CROSS TKS LEAD
XTL	CROSS TRANSMITTING LEAD
XTL1	CROSS TRANSMITTING LEAD AUXILIARY
XTOF	CROSS OUTGOING START LEAD
XTR	CROSS MTRL LEAD
XTRL	CROSS TRL RELAY OPERATING PATH

*Relay and Tube

BELL TELEPHONE LABORATORIES, INC.

NO. 4A TOLL

PRINTED IN U.S.A.

ORDER AS BSP ITEM MP-11662

SD-68389-01

DECODER MARKER TEST AND TROUBLE RECORDER CIRCUIT

DESIG.	FUNCTIONAL MEANING
0DG	NO DIGITS (Beyond code)
3D	3 DIGIT CARD
3GS	THIRD GROUND SUPPLY
4DG	4 DIGITS (Not more than 4 digits beyond code)
4GS	FOURTH GROUND SUPPLY
5DG	5 DIGITS (Not more than 5 digits beyond code)
5GS	FIFTH GROUND SUPPLY
6D	6 DIGIT CARD
6DT	6 DIGIT TRANSLATION
6GS	SIXTH GROUND SUPPLY
20C	20 CYCLE RINGING
ACO	ALARM CUT-OFF
AL	ALARM
AMS	ALL MS RELAYS
AMS1	ALL MS RELAYS AUXILIARY
AR	ALTERNATE ROUTE
ARG	AUTOMATIC RELEASE GROUND
ARG1	AUTOMATIC RELEASE GROUND AUXILIARY
BRC1-3	BUSY RECORDER TO CONTROLLERS
BRD	BUSY RECORDER TO DECODERS
BRMC	BUSY RECORDER TO MARKERS (Toll completing)
BRMT	BUSY RECORDER TO MARKERS (Intertoll)
CA	CARD ACCESS
CA4-6	COME AGAIN 4, 5 OR 6
CBH	CODE BAR HOLD
CC1-4	CODE CONNECTOR AUXILIARY
CCH $\frac{2}{5}$	CODE CONVERSION HUNDREDS
CCT	CANCEL CONTINUITY TEST
CCT $\frac{2}{5}$	CODE CONVERSION TENS
CCU $\frac{2}{5}$	CODE CONVERSION UNITS
CDL	CARD LIFT
CF	CARD FAILURE
CG0, 1, 2, 4	CARD GROUP
CGS	CONTROL GROUND SUPPLIES
CH	CHAIN
CHK	CHECK

DESIG.	FUNCTIONAL MEANING
CKL	CRANK LOCK (Translator)
CKR	CHECK RESISTANCE
CL1, 2	CARD LIFT (Translator)
CL12	CLASS 12
CLCT	CANCEL LOOP CONTINUITY TEST
CMP0-7	TOLL COMPLETING MARKER PREFERENCE
CMT0-7	TOLL COMPLETING MARKER TEST
CNE	CONNECTOR EVEN
CNO	CONNECTOR ODD
CON1	CONTINUITY
CONT(Clutch)	CONTINUOUS CARD ADVANCE (Ejection)
CPA0-5 To CPF0-5	CONTROLLER PREFERENCE FOR CONTROLLER GROUPS A TO F
CR, CR1, 2	CARD REMOVAL
CRC	CARD REMOVAL CONTROL
CTCI	CONTROLLER TEST CUT-IN
CTP	CONTROLLER TEST PREFERENCE
DC	DC OUTPULSING
DU	DIRECTED TO UPPER LEVELS
DL	DIRECTED TO LOWER LEVELS
DLC	DELAYED LOOP CLOSURE
DMTP	DECODER MARKER TEST PREFERENCE
DP0-9	DECODER PREFERENCE
DRL	DECODER RELEASE
DT	DECODER TEST CLASS
DT(Mag)	KEY RELEASE MAGNET
DT0-9	DECODER TEST
DTRL	DECODER TROUBLE RELEASE
*ELT	EXCITER LAMP TIMING (Start)
ELT1	EXCITER LAMP TIMING (End)
ERL	END RESULT LOCK
FTT(Mag)	KEY RELEASE MAGNET
FTU(Mag)	KEY RELEASE MAGNET
HMG	HOLD MAGNET GROUND
HMG1	HOLD MAGNET GROUND AUXILIARY
G0-3	GROUPS 0-3
GMS	GROUND MARKER SLEEVE LEADS
GMS0-3	GROUND MARKER SLEEVE LEADS AUXILIARY
GR	GROUP RELEASE
GS0-5	GROUND SUPPLIES 0-5
GU0-3	GROUND UNITS

*Relay and Tube

DESIG.	FUNCTIONAL MEANING
ICB	INCOMING CONNECTOR BUSY
IF0-3(Mag)	KEY RELEASE MAGNETS
IND	INDEX CHANNEL
INT(Clutch)	INTERMITTENT CARD ADVANCE (Through steps of recording)
ISB	INCOMING CONNECTOR START BATTERY
ISB1	INCOMING CONNECTOR START BATTERY AUXILIARY
IT2	INTERTOLL
KC	KEY CONTROL
KC1-8	KEY CONTROL AUXILIARIES
KCD	KEY CONTROL (Decoder stage)
KCM	KEY CONTROL (Marker stage)
KTR1	CHECK T1 AND R1
LC0-9	LINK CONNECTOR
LCH(Latch)	LATCH (Controls card advance mechanism)
LCON	LOOP CONTINUITY
LDT	LOAD TEST
LK	LOCK
LMS	LOCK MS RELAYS
LMS0-3	LOCK MS RELAYS AUXILIARIES
LPD	LOOP DIAL
M	MANUAL
MBR	MASTER BUSY ROUTE
MC	MOTOR CONTROL
MCO	MOTOR CUT-OFF
MCR	MASTER CONTROL
*MCT	MOTOR CONTROL TIMING
ME	MARKER ENGAGED
MF	MULTIFREQUENCY OUTPULSING
MFT	MULTIFREQUENCY TRANSFER
MKT	MARKER TEST
MOCK	MANUAL OPERATIONS CONTROL CHECK
MP0-9	MARKER PREFERENCE
MRL	MARKER RELEASE
MS0-39	MARKER SLEEVE
MSK	MARKER SLEEVE CHECK
MST	MARKER SLEEVE TEST
MT	MARKER TRANSFER
MT0-9	MARKER TEST
MTRL	MARKER TROUBLE RELEASE
NCF	NON-OPERATE CONTINUITY FAILURE
NR(Tube)	NUMBER OF RECORDS TIMING
NRS	NUMBER OF RECORDS START

DESIG.	FUNCTIONAL MEANING
NRS1	NUMBER OF RECORDS START AUXILIARY
*NRT	NUMBER OF RECORDS TIME-OUT
NSK	NO SKIP
OCB	OUTGOING CONNECTOR BUSY
OEV	OUTGOING FRAME EVEN
OF	OVERFLOW
ON	OFF-NORMAL
OOD	OUTGOING FRAME ODD
P1-3	PULSE
PA	PATTERN (Test)
PA1	PATTERN (Test) AUXILIARY
PFA-E	PREFERENCE A TO E
R0-8	SCANNING CONNECTOR (0-59 Rows R0 to R8)
RA1-3	ROUTE ADVANCE
RAC	ROUTE ADVANCE CONTROL
RC1-3	RELEASE CONTROLLER
RD	RELEASE DECODER
RL	RELEASE
RLM	RELEASE MANUAL OPERATIONS
RLS	RELEASE
RLT	RELEASE AFTER TRANSLATION
RLT1	RELEASE AFTER TRANSLATION AUXILIARY
RMC	RELEASE MARKER (Toll completing)
RMT	RELEASE MARKER (Intertoll)
ROR	REORDER ROUTE
RTI	RELEASE TEST (Interposers)
RTM	REORDER TIME-OUT
RTOS	RECORDER TEMPORARILY OUT OF SERVICE
RTR	RECORD TEST RESULTS
RTR1	RECORD TEST RESULTS AUXILIARY
S0-8	SCANNING CONNECTOR (0-59 Rows S0 to S8)
SCA	STOP CHAIN ADVANCE
SCT	SEIZE CHAIN FOR TEST
SG	SLEEVE GUARD
SK3, 6	SKIP 3, SKIP 6
SLPD	SENDER LOOP DIALING
SMB	SELECT MAGNET LEADS BATTERY
SMB1	SELECT MAGNET LEADS BATTERY AUXILIARY
SMG	SELECT MAGNET LEADS GROUND
SMG1	SELECT MAGNET LEADS GROUND AUXILIARY
SM0-29	SELECT MAGNET NUMBER

FUNCTIONAL DESIGNATIONS

SD-68389-01, ISSUE 2

RM 2-12 2 SHEETS, SHEET 1

NO. 4A TOLL

ISSUE 1 GGS
DATE 6-20-51 R.B.B.

MP-11663 2 SHEETS, SHEET 1

BELL TELEPHONE LABORATORIES, INC.

ORDER AS BSP ITEM MP-11663

PRINTED IN U.S.A.

ISSUE	1	GGS
DATE	6-20-51	R.B.B.

SD-68389-01

DECODER MARKER TEST
AND TROUBLE RECORDER CIRCUIT

DESIG.	FUNCTIONAL MEANING
SPC(M.R.)	SPEED CHECK (Perforator motor)
SPT	SELECT PARTICULAR TRUNK
SR	SLOW RELEASE
SR1-3	SLOW RELEASE 1, 2, 3
SRA	STOP ROUTE ADVANCE
SS	STUCK SENDER
ST	START
STR	START
STR1,2	START 1,2
STRL	SENDER TROUBLE RELEASE
SXD	SIMPLEX DIALING
SXR	SIMPLEX RINGING
T0-11	TENS NUMBER
TBS	TRUNK BLOCK SIMULATED
TC	TEST COMPLETE
TC2	TOLL COMPLETING
TCB	TRUNK BLOCK CONNECTOR BUSY
TCK	TRUNK BLOCK CONNECTOR CHECK
TICB	TEST INCOMING CONNECTOR BUSY
TKS	TRUNK SELECTED
TOCB	TEST OUTGOING CONNECTOR BUSY
TLC1-3	TRANSMITTING LEAD CONNECTOR 1-3
*TM	TIMING
TM1,2	TIMING 1,2
TMC	TM (Relay) CONTACT
TON	TEST OFF-NORMAL
TRB	TROUBLE RECORDER BUSY
TRC	TROUBLE RECORD COMPLETE
TRC1-3	TROUBLE RECORD COMPLETE 1,2,3
TRMB	TROUBLE RECORDER MADE BUSY
TS	TEST START
TSR	TRAFFIC SEPARATION REGISTER
TST	TEST
TST1-3	TEST 1,2,3
TTCB	TEST TRUNK BLOCK CONNECTOR BUSY
WAR	WARNING (Low supply of unused cards in bin)
XDD	EXPECT DIAL DELAY
XJP	CROSSED JUNCTOR PATTERN

DESIG.	FUNCTIONAL MEANING
XMS	CROSSED MARKER SLEEVE
XPS	CROSSED PRIMARY SELECT MAGNET
XSG	EXPECT STOP-GO
XSMI	CROSSED SECONDARY SELECT MAGNET INCOMING
XSMO	CROSSED PRIMARY SELECT MAGNET OUTGOING

*Relay and Tube

FUNCTIONAL DESIGNATIONS
SD-68389-01, ISSUE 2

MP-11664

SD-68393-01
INCOMING LINK AND CONNECTOR CIRCUIT

DESIG.	FUNCTIONAL MEANING
A	ALTERNATE (Frequency cut-in)
AL	ALARM
CB	CONNECTOR BUSY
CH	CHAIN GUARD
FCH	FRAME CONNECTOR (Home)
FCM	FRAME CONNECTOR (Mate)
FLH	FRAME LOCKOUT (Home)
FLM	FRAME LOCKOUT (Mate)
LCH0-9	LINK CONNECTOR CUT-IN (Home)
LCM0-9	LINK CONNECTOR CUT-IN (Mate)
LWH	LINK WANTED (Home)
LWM	LINK WANTED (Mate)
MC	MARKER CONNECTOR
MP	MARKER PREFERENCE
P(Hold)	PRIMARY HOLD MAGNETS
P(Select)	PRIMARY SELECT MAGNETS
R	REGULAR (Frequency cut-in)
S(Hold)	SECONDARY HOLD MAGNETS
S(Select)	SECONDARY SELECT MAGNETS
SH0-9	SELECT MAGNET (Home)
SLH	SELECT MAGNET LOCKOUT (Home)
SLM	SELECT MAGNET LOCKOUT (Mate)
SM0-9	SELECT MAGNET (Mate)
T0-9	TROUBLE RECORDER OR TROUBLE INDICATOR (Cut-in)

SD-68394-01
OUTGOING LINK AND CONNECTOR CIRCUIT

DESIG.	FUNCTIONAL MEANING
A	ALTERNATE (Frequency cut-in)
AL	ALARM
CB	CONNECTOR BUSY
CH	CHAIN GUARD
FCH	FRAME CONNECTOR (Home)
FCM	FRAME CONNECTOR (Mate)
FLH	FRAME LOCKOUT (Home)
FLM	FRAME LOCKOUT (Mate)
JCH0-9	JUNCTOR CUT-IN (Home)
JCM0-9	JUNCTOR CUT-IN (Mate)
JLH	JUNCTOR LOCKOUT (Home)
JLM	JUNCTOR LOCKOUT (Mate)
LCH0-9	LINK CONNECTOR CUT-IN (Home)
LCM0-9	LINK CONNECTOR CUT-IN (Mate)
LWH	LINK WANTED (Home)
LWM	LINK WANTED (Mate)
MCA	MARKER CUT-IN
MCB	MARKER CUT-IN
MP	MARKER PREFERENCE
P(Hold)	PRIMARY HOLD MAGNETS
P(Select)	PRIMARY SELECT MAGNETS
R	REGULAR (Frequency cut-in)
S(Hold)	SECONDARY HOLD MAGNETS
S(Select)	SECONDARY SELECT MAGNETS
SH0-9	SELECT MAGNET (Home)
SM0-9	SELECT MAGNET (Mate)

SD-68395-01
MARKER CONNECTOR CIRCUIT

DESIG.	FUNCTIONAL MEANING
CB-	CONNECTOR BUSY
MC1-3	MARKER CUT-IN AUXILIARIES
MCA, B	MARKER CUT-IN
MP-	MARKER PREFERENCE
PMC	PARTICULAR MARKER (Toll completing) - TEST CALL
PMI	PARTICULAR MARKER (Intertoll)- TEST CALL

SD-68420-01
GROUP BUSY CHAIN RELAY CIRCUIT - OVERFLOW TRUNK CIRCUIT AND OVERFLOW TRUNK CONTROL CIRCUIT

DESIG.	FUNCTIONAL MEANING
A	FLASH CONTROL
D	DELAY QUOTATION
F	FLASH
GB0-3	GROUP BUSY
GBT	GROUP BUSY TERMINAL
OF	OVERFLOW
ON	OFF NORMAL
RO	REORDER
SL	SENDING LEAD CONTROL

ISSUE	1	GGS
DATE	6-20-51	R.B.B.

FUNCTIONAL DESIGNATIONS
SD-68393-01, ISSUE 4
SD-68394-01, ISSUE 3
SD-68395-01, ISSUE 2
SD-68420-01, ISSUE 1
RM 2-13

NO. 4A TOLL

MP-11665

SD-95087-01
SIGNALING RECEIVING CIRCUIT MULTIFREQUENCY PULSING

DESIG.	FUNCTIONAL MEANING
2/6	CHANNEL
CK1-3	CHECK
KP1-3	KEY PULSE
SP	SIGNAL PRESENT

SD-95536-01
SIGNALING RECEIVING CIRCUIT MULTIFREQUENCY PULSING

DESIG.	FUNCTIONAL MEANING
2/6	CHANNEL
CK2,3	CHECK
FT	FILAMENT TRANSFER
KP	KEY PULSE
KP1,2	KEY PULSE AUXILIARIES
LK	LOCK
SP	SIGNAL PRESENT

ISSUE	1	GGS
DATE	6-20-51	

R.B.B.

FUNCTIONAL DESIGNATIONS
SD-95087-01, ISSUE 20
SD-95536-01, ISSUE 3
RM 2-14

NO. 4A TOLL

MP-12057

ISSUE	1	2	3	4
DATE	11-28-50			

COLOR CODES FOR CAPACITORS AND RESISTORS

JAN* COLOR CODES FOR FIXED CAPACITORS

(CAPACITANCE VALUES IN MICROMICROFARADS)

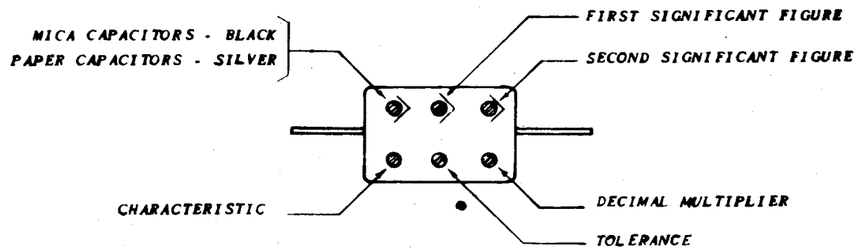

COLOR	SIGNIFICANT FIGURE	DECIMAL MULTIPLIER	TOLERANCE	CHARACTERISTIC (SEE TABLE A)
BLACK	0	1	20%	A
BROWN	1	10	-	B
RED	2	100	2%	C
ORANGE	3	1000	-	D
YELLOW	4	-	-	E
GREEN	5	-	-	F
BLUE	6	-	-	G
VIOLET	7	-	-	
GRAY	8	-	-	
WHITE	9	-	-	
GOLD	-	0.1	5%	
SILVER	-	0.01	10%	

JAN* AND RMA+ COLOR CODES FOR FIXED COMPOSITION RESISTORS

(RESISTANCE VALUES IN OHMS)

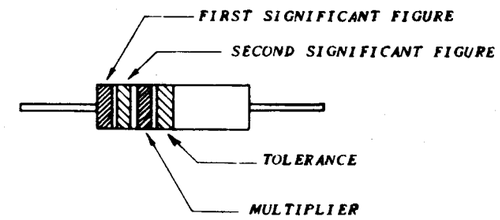

COLOR	SIGNIFICANT FIGURE	MULTIPLIER	TOLERANCE
BLACK	0	1.0	-
BROWN	1	10	-
RED	2	100	-
ORANGE	3	1,000	-
YELLOW	4	10,000	-
GREEN	5	100.000	-
BLUE	6	1,000,000	-
VIOLET	7	10,000,000	-
GRAY	8	100,000,000	-
WHITE	9	1,000,000,000	-
GOLD	-	0.1	± 5 per cent
SILVER	-	0.01	± 10 per cent
NO COLOR	-	-	± 20 per cent

TABLE A

CHARACTERISTIC	Q	TEMPERATURE COEFFICIENT PARTS/MILLION/DEGREE C	MAXIMUM CAPACITANCE DRIFT
A	NOT SPECIFIED	NOT SPECIFIED	NOT SPECIFIED
B	SPECIFIED	NOT SPECIFIED	NOT SPECIFIED
C	SPECIFIED	-200 to +200	0.5 per cent
D	SPECIFIED	-100 to +100	0.2 per cent
E	SPECIFIED	0 to +100	0.05 per cent
F	SPECIFIED	0 to +50	0.025 per cent
G	SPECIFIED	0 to +50	0.025 per cent

* JOINT ARMY-NAVY + RADIO MANUFACTURERS ASSOCIATION

COLOR CODES FOR CAPACITORS AND RESISTORS

RM 3-1

MP-12058

ISSUE	DATE

DATA FOR COLD-CATHODE TUBES

CODE	NUMBER OF ELEMENTS	STARTER GAP		MAIN GAP		MAXIMUM TRANSFER CURRENT	FORWARD CURRENT MILLIAMPERES DC FOR LIFE OF				PEAK INVERSE CURRENT	NOMINAL DEIONIZATION TIME MILLISECONDS		MAXIMUM DIMENSIONS INCHES		WESTERN ELECTRIC SOCKET	SCHEMATIC DIAGRAM NUMBER	CODE
		Nominal Breakdown Volts DC	Nominal Sustaining Volts DC (At 20 Ma.)	Minimum Breakdown Volts DC	Nominal Sustaining Volts DC (At 20 Ma.)	μA. DC (Anode at 130V)	10 Hrs.	100 Hrs.	1000 Hrs.	10000 Hrs.	Ma. DC.	Main Gap	Starter Gap	Height	Diam.			
313C	3	70	60	150	75	5	100	35	20	10	5	10	3	3-13/32	1-3/16	143B	1	313C
313CA	3	72	60	200	75	5	72	25	14	7	5	10	3	3-13/32	1-3/16	143B	1	313CA
313CB	3	70	60	185	76	5	72	25	14	7	5	10	3	3-13/32	1-3/16	143B	1	313CB
313CC	3	72	60	170	75	5	72	25	14	7	5	10	3	3-13/32	1-3/16	143B	1	313CC
313CD	3	72	60	-	-	5	72	25	14	7	5	10	3	3-13/32	1-3/16	143B	1	313CD
333A	3	70	60	150	75	5	100	35	20	10	5	10	3	3-3/32	1-3/16	Bkt.Mtg.	2	333A
346B	3	70	60	225	80	200†	100	35	20	10	5	8	2	3-15/32	1-3/16	Bkt.Mtg.	3	346B
353B	3	70	60	165	75	5	100	35	20	10	5	10	3	3-3/32	1-3/16	Bkt.Mtg.	3	353B
358A	2	70	60	-	-	-	50	18	10	5	-	-	-	1-13/16	3/4	None	4	358A
359A	3	75	60*	180	75*	50	40	15	8	4	1	8*	2*	2-21/32	1/2	None	5	359A
372A	3	70	60	150	75	5	100	35	20	10	5	10	3	3-3/32	1-3/16	Bkt.Mtg.	2	372A
376B	3	80	60	275	65	200	100	60	35	17	5	5	1	4-1/8	1-3/16	Octal	6	376B
395A	3	77	60*	155	75*	5	35	13	7	4	1	10*	3*	3-1/4	1/2	None	5	395A
OA3/VR75	3	100	75	-	-	-	-	-	-	-	-	-	-	-	-	Octal	7	OA3/VR75
OC3/VR105	3	115	105	-	-	-	-	-	-	-	-	-	-	-	-	Octal	7	OC3/VR105
OD3/VR150	3	160	150	-	-	-	-	-	-	-	-	-	-	-	-	Octal	7	OD3/VR150

KEY TO SYMBOLS AND ABBREVIATIONS:

Bkt.Mtg. - Bracket Mounting
DC - Direct Current
Diam. - Diameter
Hrs. - Hours
Ma. - Milliamperes
μA - Microamperes
***** - At 10 Milliamperes DC
† - Anode at 110V

SCHEMATIC DIAGRAMS

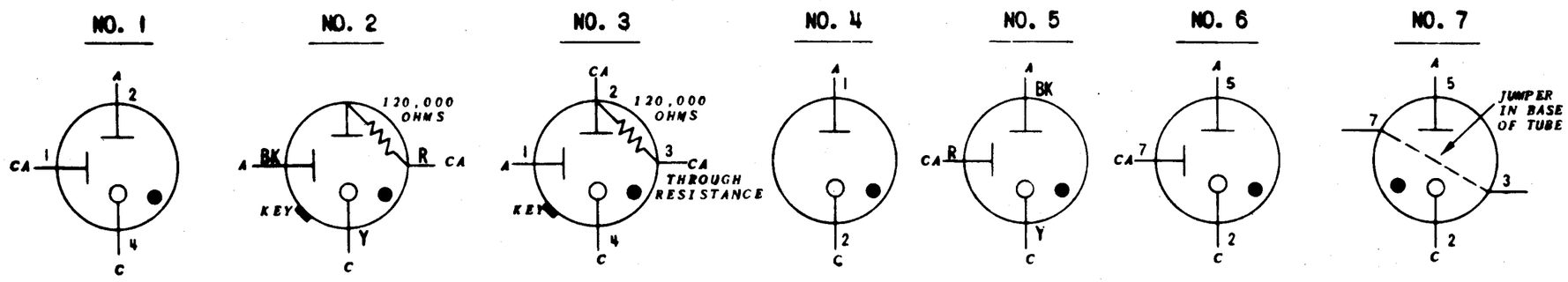

KEY TO ABBREVIATIONS:

- C - Cathode
- CA - Control Anode
- A - Main Anode
- Y - Lead Out Wire - Yellow
- R - Lead Out Wire - Red
- BK - Lead Out Wire - Black

DATA FOR COLD-CATHODE TUBES

RM 3-2

ITEM NO.	OUTGOING TRUNK* TYPE	OUTGOING TRUNK* GUARDED OR UNGUARDED	CLASS OF OUTPULSING FROM I.S.	OUTPULSE CLASS RELAYS OPERATED M	MF	DC	DP LPD	DP SXD	DLC	XDD	XSG	START PULSING SIGNAL REQUIRED	START PULSING SIGNAL	STOP PULSING SIGNAL	TIMING INTERVALS RTT	DLC	MFT	TGT	NOTES	TYPE OF EQUIPMENT RECEIVING SIGNALS OR PULSES
1	INTERTOLL-MANUAL	GUARDED	NONE	X								NO			**NONE				UPON MARKER RELEASE THE SENDER MAKES "SL" CHECK AND RELEASES.	MANUAL SWITCHBOARD AT DISTANT TOLL OFFICE.
2	TOLL COMPLETING-MANUAL	UNGUARDED	NONE	X					X			NO				575 MS			UPON MARKER RELEASE THE SENDER TIMES FOR DLC, MAKES "SL" CHECK AND RELEASES.	SERVICE TRUNKS SUCH AS 121, 101; TX TRUNKS, 11EX; REORDER, OVERFLOW AND MASTER BUSY.
3	TOLL COMPLETING PCI OR REVERTIVE	GUARDED	DC KEY PULSING			X						YES	BATTERY ON KT1 LEAD FROM OUTGOING SENDER	NO BATTERY ON KT1 LEAD FROM OUTGOING SENDER	***NONE				UPON MARKER RELEASE THE INCOMING SENDER MAKES "SL" CHECK. A CHECK IS THEN MADE BETWEEN THE INCOMING AND OUTGOING SENDERS VIA THE KT1 AND KR1 LEAD WHICH RESULTS IN A START PULSING SIGNAL TO THE INCOMING SENDER.	OUTGOING SENDER AT SAME 4A INSTALLATION.
4	INTERTOLL-MF PULSING	GUARDED	MF PULSING		X							YES	NO GROUND ON SIMPLEXED KT1 & KR1 LEADS	GROUND ON SIMPLEXED KT1 & KR1 LEADS	375 MS		50 MS		SENDER CHECKS FOR START PULSING SIGNAL PRIOR TO "SL" CHECK, MAKES "SL" CHECK AND TRANSFERS SUPERVISORY CIRCUIT FROM KT1 AND KR1 LEADS TO KT AND KR LEADS. IF INITIAL SIGNAL IS STOP PULSING AND PERSISTS FOR DURATION OF SENDER TIMING (30-40 SEC.) A DOUBLE CONNECTION IS INDICATED AND SENDER SENDS FLASH AHEAD. IF STOP PULSING SIGNAL IS RECEIVED DURING OUTPULSING THE CALL IS ROUTED TO REORDER.	INCOMING MF SENDER AT DISTANT TOLL OFFICE.
5	TOLL COMPLETING-MF PULSING	UNGUARDED	MF PULSING		X				X			YES	NO GROUND ON SIMPLEXED KT & KR LEADS	GROUND ON SIMPLEXED KT & KR LEADS		575 MS	50 MS		SENDER DOES NOT WAIT FOR START PULSING SIGNAL TO MAKE "SL" CHECK. RECEIVES STOP PULSING SIGNAL PRIOR TO START PULSING SIGNAL. ABSENCE OF INITIAL STOP PULSING SIGNAL INDICATES AN OPEN TRUNK AND SENDER WILL TIME OUT.	1. MF TERMINATING SENDER AT NO. 1 CROSSBAR OFFICE. 2. MF SENDER AT CROSSBAR TANDEM OFFICE. 3. MF INCOMING REGISTER AT NO. 5 CROSSBAR OFFICE.
6	INTERTOLL-SIMPLEX DIALING	GUARDED	SX DIALING					X				YES	BATTERY ON SIMPLEXED KT1 & KR1 LEADS	GROUND ON SIMPLEXED KT1 & KR1 LEADS	375 MS				START PULSING SIGNAL IS WAITING WHILE ROUND TRIP TRANSIT TIMING TAKES PLACE. IF STOP PULSING SIGNAL IS RECEIVED INITIALLY THIS INDICATES TROUBLE; FOR EXAMPLE, A DOUBLE CONNECTION ON A 2-WAY TRUNK OR A REVERSED 1-WAY TRUNK.	INTERTOLL S/S EQUIPMENT IN DISTANT TOLL OFFICE.
7	INTERTOLL-SIMPLEX DIALING	GUARDED	SX DIALING					X		X		YES	BATTERY ON SIMPLEXED KT1 & KR1 LEADS	GROUND ON SIMPLEXED KT1 & KR1 LEADS	375 MS				PRELIMINARY STOP PULSING SIGNAL IS ACCEPTED WITHOUT INDICATING TROUBLE, BECAUSE OF EXPECTED DIAL DELAY (XDD).	1. DP INCOMING SENDER AT DISTANT TOLL OFFICE. 2. INTERTOLL S/S TRUNK FINDING EQUIPMENT.
8	INTERTOLL-SIMPLEX DIALING	GUARDED	SX DIALING					X			X	YES	BATTERY ON SIMPLEXED KT1 & KR1 LEADS	GROUND ON SIMPLEXED KT1 & KR1 LEADS	375 MS				DURING OUTPULSING THE SENDER EXPECTS ONE STOP PULSING SIGNAL FROM THE EQUIPMENT AHEAD. OUTPULSING CONTINUES AFTER START PULSING SIGNAL IS AGAIN RECEIVED.	INTERTOLL S/S EQUIPMENT WHICH CONNECTS TO LINK TYPE OFFICES.
9	INTERTOLL-SIMPLEX DIALING	GUARDED	SX DIALING					X		X	X	YES	BATTERY ON SIMPLEXED KT1 & KR1 LEADS	GROUND ON SIMPLEXED KT1 & KR1 LEADS	375 MS				PRELIMINARY STOP PULSING SIGNAL ACCEPTED (XDD), AND IN ADDITION, ONE STOP PULSING SIGNAL IS EXPECTED DURING OUTPULSING. OUTPULSING IS RESUMED UPON RECEIPT OF A START PULSING SIGNAL.	INTERTOLL S/S TRUNK FINDING EQUIPMENT WHICH CONNECTS TO LINK TYPE OFFICES.
10	TOLL COMPLETING-LOOP DIALING	UNGUARDED	LOOP DIALING				X		X			YES	GROUND ON KT1 LEAD, BATTERY ON KR1 LEAD	BATTERY ON KT1 LEAD, GROUND ON KR1 LEAD		775 MS			START PULSING SIGNAL IS RECOGNIZED BY OPERATION OF TG AND TG1 RELAYS IN THE SENDER AFTER DLC TIMING. A STOP PULSING SIGNAL INDICATES A REVERSED TRUNK, AND THE SENDER WILL TIME OUT.	LOCAL S/S OFFICE WHERE CONTROLLED RING (20 CYCLE) MAY BE REQUIRED.
11	TOLL COMPLETING-LOOP DIALING	UNGUARDED	LOOP DIALING				X		X		X	YES	GROUND ON KT1 LEAD, BATTERY ON KR1 LEAD	BATTERY ON KT1 LEAD, GROUND ON KR1 LEAD		775 MS			START PULSING SIGNAL IS RECOGNIZED BY THE OPERATION OF THE TG AND TG1 RELAYS AFTER DLC TIMING. THE SENDER EXPECTS ONE STOP PULSING SIGNAL DURING OUTPULSING. OUTPULSING IS RESUMED UPON RECEIPT OF A START PULSING SIGNAL.	LOCAL S/S OFFICE WHICH CONNECTS TO LINK TYPE OFFICES.
12	TOLL COMPLETING-LOOP DIALING	UNGUARDED	LOOP DIALING				X		X	X		YES	GROUND ON KT1 LEAD, BATTERY ON KR1 LEAD	BATTERY ON KT1 LEAD, GROUND ON KR1 LEAD		775 MS		75 MS	SUPERVISION TO THE SENDER MAY CHANGE RAPIDLY DURING SEIZURE OF THE TRUNK AT THE DISTANT END. SINCE THE SENDER IS UNABLE TO RECOGNIZE SOME OF THESE CHANGES, THE START PULSING SIGNAL IS TIMED WHEN RECEIVED (TGT).	LOCAL LINK TYPE OFFICE.
13	TOLL COMPLETING-LOOP DIALING	UNGUARDED	LOOP DIALING				X		X	X	X	YES	GROUND ON KT1 LEAD, BATTERY ON KR1 LEAD	BATTERY ON KT1 LEAD, GROUND ON KR1 LEAD		775 MS		75 MS	SAME AS ABOVE EXCEPT THAT THE SENDER EXPECTS ONE STOP PULSING SIGNAL DURING OUTPULSING. OUTPULSING IS RESUMED UPON RECEIPT OF A START PULSING SIGNAL.	LINK TYPE OFFICE WHICH CONNECTS TO OTHER LINK TYPE OFFICES.
14	TOLL COMPLETING-LOOP DIALING	GUARDED	LOOP DIALING				X			X		YES	GROUND ON KT1 LEAD, BATTERY ON KR1 LEAD	BATTERY ON KT1 LEAD, GROUND ON KR1 LEAD		175 MS		75 MS	SUPERVISION TO THE SENDER MAY CHANGE RAPIDLY DURING SEIZURE OF THE TRUNK AT THE DISTANT END. SINCE THE SENDER IS UNABLE TO RECOGNIZE SOME OF THESE CHANGES, THE START PULSING SIGNAL IS TIMED WHEN RECEIVED (TGT).	C.D.O. TYPE OFFICE.

X = OPERATED RELAY.
* = 1-WAY OUTGOING TRUNK OR OUTGOING PORTION OF 2-WAY TRUNK.
** = THE INCOMING SENDER DOES NOT EXPECT RETURN SUPERVISION, THEREFORE NO RTT TIMING IS REQUIRED.
*** = THE NATURE OF THE CHECK BETWEEN THE INCOMING AND OUTGOING SENDERS MAKES RTT TIMING UNNECESSARY.

INCOMING SENDER CKT.-DP SD-68221-01, ISS.18
INCOMING SENDER CKT.-MF SD-68222-01, ISS.18

INCOMING SENDER-OUTPULSING

NO. 4A TOLL

RM 3-3

MP-11684

ISSUE	1	2
DATE	8-30-51	12-17-53

ISSUE	1	2
	A.S.M.	G.F.S.
DATE	1-18-52	10-8-52

TYPICAL CARDS FOR CALL REQUIRING

TAB DESIGNATION	TRANSLATION OF AN AREA CODE ONLY	TRANSLATION OF AN AREA CODE REQUIRING TRANSLATION OF BOTH AREA AND NATIONAL OFFICE CODE (PRINCIPAL CITY ROUTE AVAILABLE)	TRANSLATION OF AN AREA CODE REQUIRING TRANSLATION OF BOTH AREA AND NATIONAL OFFICE CODE (NO PRINCIPAL CITY ROUTE AVAILABLE)	TRANSLATION OF A NATIONAL OFFICE CODE ONLY	TRANSLATION OF A SERVICE CODE OR A 1 DIGIT TX CODE ONLY	TRANSLATION OF A HOME TOLL CENTER CODE ONLY	TRANSLATION OF THE 1ST THREE DIGITS OF A 2 DIGIT TX CODE	TRANSLATION OF THE 1ST THREE DIGITS OF A 3 DIGIT TX CODE	TRANSLATION OF AN ALTERNATE ROUTE CARD	TRANSLATION OF A 2 DIGIT OR 3 DIGIT TX CODE	TRANSLATION OF A HOME TOLL CENTER + SERVICE OR 1 DIGIT TX CODES	TRANSLATION OF A HOME TOLL CENTER CODE AND 1ST THREE DIGITS OF A 2 DIGIT OR 3 DIGIT TX CODE	TRANSLATION OF AREA AND NATIONAL OFFICES CODES
A 2/5	YES	YES	YES	YES	YES	YES	YES	YES	YES	YES	YES	YES	YES
B 2/5	YES	YES	YES	YES	YES	YES	YES	YES	YES	YES	YES	YES	YES
C 2/5	YES	YES	YES	YES	YES	YES	SEE NOTE 1	SEE NOTE 1	YES	YES	YES	YES	YES
D 2/5	NO	NO	NO	NO	NO	NO	NO	NO	NO	YES	YES	YES	YES
E 2/5	NO	NO	NO	NO	NO	NO	NO	NO	NO	SEE NOTE 7	YES	YES	YES
F 2/5	NO	NO	NO	NO	NO	NO	NO	NO	NO	NO	YES	YES	YES
CG 0 & 2 (AR)	NO	NO	NO	NO	NO	NO	NO	NO	YES	NO	NO	NO	NO
CG 0 + 1 (RA1)	←				SEE NOTE 2				NO	←	SEE NOTE 2		→
CG 1 + 2 (RA2)	←				SEE NOTE 3				NO	←	SEE NOTE 3		→
CG 0 + 4 (RA3)	←				SEE NOTE 4				NO	←	SEE NOTE 4		→
CG 1 + 4 (3D)	YES	YES	YES	YES	YES	YES	YES	YES	NO	NO	NO	NO	NO
CG 2 + 4 (6D)	NO	NO	NO	NO	NO	NO	NO	NO	NO	YES	YES	YES	YES
VO	SEE NOTE 6	SEE NOTE 6	NO	SEE NOTE 5	NO	NO	NO	NO	NO	NO	NO	NO	SEE NOTE 5
NVO			NO		NO	NO	NO	NO	NO	NO	NO	NO	
CARD LOCATED IN	HB	HB	HB	HB	HB	HB	HB	HB	HB	HB OR DFAT OR FAT	HB OR DFAT OR FAT	HB OR DFAT OR FAT	HB OR DFAT OR FAT
EXHIBIT NO.	1	2	3	4	5	6	7	8	9	10	11	12	13

SEE NOTE 6

YES= TABS RETAINED

NO= TABS REMOVED

NOTES

1. NO WHEN OFFICE HAS EITHER 2- OR 3-DIGIT TX CODES.
   YES WHEN OFFICE HAS BOTH 2- AND 3-DIGIT TX CODES.
2. YES WHEN ROUTING INSTRUCTION ON THE FIRST CARD IS CARD TO CARD AND TRUNK GROUP CONTAINS MORE THAN 40 TRUNKS; OTHERWISE NO.
3. YES WHEN ROUTING INSTRUCTION ON THE SECOND CARD IS CARD TO CARD AND TRUNK GROUP CONTAINS MORE THAN 80 TRUNKS; OTHERWISE NO.
4. YES WHEN ROUTING INSTRUCTION ON THE THIRD CARD IS CARD TO CARD AND TRUNK GROUP CONTAINS MORE THAN 120 TRUNKS; OTHERWISE NO.
5. ROUTING WITH BOTH COMMON AND TERMINAL GRADE TRUNKS. RETAIN VO TAB ON CARDS FOR CODES REQUIRING COMMON GRADE TRUNKS AND NVO TAB FOR TERMINAL GRADE TRUNKS. OTHERWISE REMOVE BOTH TABS.
6. NO IN THESE POSITIONS MEANS TABS NOT CODED I.E. FOR ANY GIVEN CARD THE REMAINING TABS ARE REMOVED.
7. NO FOR TWO DIGIT TX CODE.
   YES FOR THREE DIGIT TX CODE.

TRANSLATOR CARD CODING

INPUT INFORMATION

NO 4A OR 4M TOLL

RM3-4

TRAFFIC SEPARATION
REGISTER LEADS GROUNDED

TS POSITIONS PUNCHED	TRAFFIC SEPARATION REGISTER GROUP (FROM INCOMING TRUNKS, SEE OS 120-1)			
	1	2	3	4
0	A1	A2	A3	A4
1	B1	B2	B3	B4
2	C1	C2	C3	C4
0 AND 1	D1	D2	D3	D4
0 AND 2	E1	E2	E3	E4
1 AND 2	F1	F2	F3	F4
0,1, AND 2	G1	G2	G3	G4

PEG COUNT AND OVERFLOW

TP POSITIONS PUNCHED	PEG COUNT REGISTER GROUP SEE OS 196-1	OVERFLOW REGISTER GROUP SEE OS 196-1
0	0	0
1	1	1
2	2	2
0 AND 1	3	3
0 AND 2	4	4
1 AND 2	0	NONE
0,1,AND 2	NONE	0

CLASS AND CANCEL DELAY LOOP CLOSURE

CL POSITIONS PUNCHED		OUTPULSE CLASS INFORMATION	CDLC POSITION PUNCHED
TENS	UNITS		
0	4,7	MANUAL	NOTE 10
0	0,1	DC KEY PULSE	YES
0	0,2	MULTIFREQUENCY	NOTE 10
0	1,4	SX DIAL	YES
0	2,4	SX DIAL, EXPECT DELAY DIAL	YES
0	0,7	SX DIAL, EXPECT STOP-GO	YES
0	1,7	LOOP DIAL, SIMPLEX RING	NO
0	2,7	LOOP DIAL, C.D.O. OFFICE	YES
1	4,7	LOOP DIAL, EXPECT STOP-GO	NO
1	0,1	LOOP DIAL, 20 CYCLE RING	NO
1	0,2	LOOP DIAL, EXPECT DELAY DIAL	NO
1	1,2	LOOP DIAL, EXPECT DELAY DIAL, EXPECT STOP-GO	NO
1	0,4	SX DIAL, EXPECT DELAY DIAL, EXPECT STOP-GO	YES

ROUTING INSTRUCTIONS

RI POSITIONS PUNCHED	INSTRUCTION	
4, 7	CARD TO CARD	ALSO INDICATES PRINCIPAL CITY ROUTING ON 3D CARD USED IN PRETRANSLATION
0, 1	CARD TO RELAY	
0, 2	RELAY TO RELAY	
1, 2	FOLLOW WITH OVERFLOW	
0, 4	FOLLOW WITH REORDER	
1, 4	FOLLOW WITH MASTER BUSY	
2, 4	FOLLOW WITH SECOND TRIAL	
0, 7	NO PRINCIPAL CITY ROUTING	

CONTINUITY AND DIGIT CONTROL

CDC POSITION PUNCHED	NUMBER OF NUMERICAL DIGITS EXPECTED	LOOP CONTINUITY TEST
4 AND 7	VARIABLE	CANCELLED
0 AND 1	VARIABLE	MADE
0 AND 2	NONE	CANCELLED
1 AND 2	NONE	MADE
0 AND 4	4	CANCELLED
1 AND 4	4	MADE
2 AND 4	5	CANCELLED
0 AND 7	5	MADE

ISSUE	1	A.S.M. A.B.B.	2	A.B.C. A.E.C.		
DATE	1-18-52		10-15-53			

2 SHEETS, SHEET 1

MP-11713

TRANSLATOR CARD CODING
OUTPUT INFORMATION

RM3-5

2 SHEETS, SHEET 1

NO. 4A OR 4M TOLL

ORDER AS BSP ITEM MP-11713

BELL TELEPHONE LABORATORIES, INC.

PRINTED IN U. S. A.

ISSUE	1	2
DATE	1-19-52	10-15-53
	A.E.B.	G.R.S.

TYPICAL CARDS

		IN HOME BOX									IN HOME BOX, DECODER F.A. BOX OR F.A.T. BOX			
EXHIBIT NO.		1	2	3	4	5	6	7	8	9	10	11	12	13
OUTPUT INFORMATION	HOLE DESIGNATION	AREA CODES-3D - 3-DIGIT TRANSLATION	AREA CODES-3D - PRIN. CITY ROUTING	AREA CODES-3D - NO PRIN. CITY ROUTING	NAT. OFF. CODES-3D - 3 DIGIT TRANSLATION	SERVICE CODE-3D - 3-DIGIT TRANSLATION	HOME TOLL CEN. CODE-3D	TX CODE 3D - 2-DIGIT TX CODES	TX CODES 3D - 3-DIGIT TX CODES	ALTERNATE ROUTE AR	TX CODES 6D - 4- OR 5-DIGIT TRANSLATION	HOME TC + SERVICE OR 1-D TX CODE - 6-DIGIT TRANSLATION	TC CODES 6D - 2-& 3-DIGIT TX CODES	FOREIGN AREA 6D - 6 DIGIT TRANSLATION
PRETRANSLATION	NCA	YES	NO	NO	YES	YES	NO	NO	NO	NO	NO	NO	NO	NO
	CA-4	NO	NO	NO	NO	NO	NO	YES	NO	NO	NO	NO	NO	NO
	CA-5	NO	NO	NO	NO	NO	NO	NO	YES	NO	NO	NO	NO	NO
	CA-6	NO	YES	YES	NO	NO	YES	NO	NO	NO	NO	NO	NO	NO
OGT APPEARANCE (TWO TRAIN OFFICES ONLY)	IT SEE NOTE 1	YES	YES	NO	YES	YES	NO	NO	NO	YES	YES	YES	YES	YES
	TC SEE NOTE 1													
	ITC SEE NOTE 2	NO	NO	NO	NO	YES						YES		
AREA CODE CONTROL	NAC	NO	NO	NO	YES	YES	YES	YES	YES	NO	NO	NO	NO	NO
	AC	YES	YES	YES	NO	NO	NO	NO	NO	NO	NO	NO	NO	NO
	AHA	NO	NO	NO	NO	NO	NO	NO	NO	SEE NOTE 3	NO	NO	NO	NO
	AFA	NO	NO	NO	NO	NO	NO	NO	NO		NO	NO	NO	NO
ALTERNATE ROUTE PATTERN NUMBERS	ART-2/5 AND ARU-2/5	SEE NOTE 4	SEE NOTE 4	NO	SEE NOTE 4	NO	NO	NO	NO	NO	YES - IF REACHED THROUGH TANDEM	NO	NO	SEE NOTE 4
ROUTING INSTRUCTIONS SEE SH. 1	RI-2/5	YES	YES	YES	YES	YES	YES	YES	YES	YES	YES	YES	YES	YES
CODE CONVERSION	CCHN	SEE NOTE 5	YES	NO	SEE NOTE 5	YES	NO	NO	NO	NO	YES	YES	YES	SEE NOTE 5
	CCTN													
	CCUN													
	CCH-2/5 CCT-2/5 CCU-2/5	SEE NOTE 6	NO	NO	SEE NOTE 6	NO	NO	NO	NO	YES - FOR CODE MATCHING	NO	NO	NO	SEE NOTE 6
VARIABLE SPILLING CONTROL	NSK	AS REQ.	AS REQ.	NO	AS REQ.	NO	NO	NO	NO	NO	NO	NO	NO	AS REQ.
	SK-3			NO		YES	NO	NO	NO	NO	NO	NO	YES	
	SK-6	NO	NO	NO	NO	NO	NO	NO	NO	NO	YES	YES	NO	
TBC GROUP START GROUP END	TCT-1/3	YES	YES	NO	YES	YES	NO	NO	NO	YES	YES	YES	YES	YES
	TB-2/5													
	GST-1/2													
	GST-2/5													
	GET-1/2													
	GET-2/5													
TRANSLATOR BOX NUMBER	HB	NO	YES	YES	NO	NO	SEE NOTE 7	SEE NOTE 7	SEE NOTE 7	NO	NO	NO	NO	NO
	BT-1/2													
	BU-2/5													
CLASS	CLT-1/2	YES	YES	NO	YES	YES	NO	NO	NO	YES	YES	YES	YES	YES
	CLU-2/5													
	CDLC													
CONTINUITY AND DIGIT CONTROL	CDC-2/5	YES	YES	NO	YES	YES	NO	NO	NO	NO	YES	YES	YES	YES
TRAFFIC SEPARATION PEG COUNT	TS-0	YES	YES	SEE NOTE 8	YES	YES	NO	NO	NO	NO	YES	YES	YES	SEE NOTE 9
	TS-2													
THROUGH TRAFFIC PEG COUNT SEE SH. 1	TPC	YES	YES	YES	YES - EXCEPT WHEN CODE IS IN LOCAL SERVICE AREA OF CSP	NO	NO	NO	NO	NO	NO	NO	NO	NO
TRK. GROUP PEG & COUNT OVERFLOW	TP-0	YES	YES	NO	YES	YES	NO	NO	NO	YES	YES	YES	YES	YES
	TP-2													

YES= HOLE PUNCHED
NO = HOLE NOT PUNCHED

NOTES:

1. IT OR TC PUNCHED DEPENDING UPON TRAIN LOCATIONS OF OG TRUNK.
2. ITC PUNCHED WHEN SERVICE TRUNKS APPEAR ON BOTH TRAINS.
3. USE AFA WHEN TRUNKS TERMINATE IN A FOREIGN AREA. USE AHA WHEN TRUNKS TERMINATE IN THE HOME AREA.
4. YES WHEN RR OR CR ROUTING INSTRUCTION IS USED; OTHERWISE NO.
5. NO FOR DIGITS REQUIRING CODE CONVERSION OR PREFIXING; OTHERWISE YES.
6. YES FOR DIGITS REQUIRING CODE CONVERSION OR PREFIXING; OTHERWISE NO.
   1, 2, OR 3 DIGITS MAY BE CONVERTED OR PREFIXED.
7. HB OR DFA PUNCHED DEPENDING ON LOCATION OF 6D CARD.
8. YES IF ONLY ONE TRAFFIC SEPARATION IS REQUIRED FOR THE CALLED AREA.
   NO IF TWO OR MORE TRAFFIC SEPARATIONS ARE REQUIRED FOR THE CALLED AREA.
9. NO IF ONLY ONE TRAFFIC SEPARATION IS REQUIRED FOR THE CALLED AREA.
   YES IF TWO OR MORE TRAFFIC SEPARATIONS ARE REQUIRED FOR THE CALLED AREA.
10. CDLC POSITION IS PUNCHED IF OUTGOING TRUNK IS GUARDED.
    CDLC POSITION IS NOT PUNCHED IF OUTGOING TRUNK IS UNGUARDED.
    FOR #4M OUTGOING TRUNK TOLL COMPLETING MF REQUIRES CDLC PUNCH.

TRANSLATOR CARD CODING
OUTPUT INFORMATION

NO. 4A OR 4M TOLL

2 SHEETS, SHEET 2

RM3-5

MP-11685

ISSUE	DATE
1	10-1-51
2	

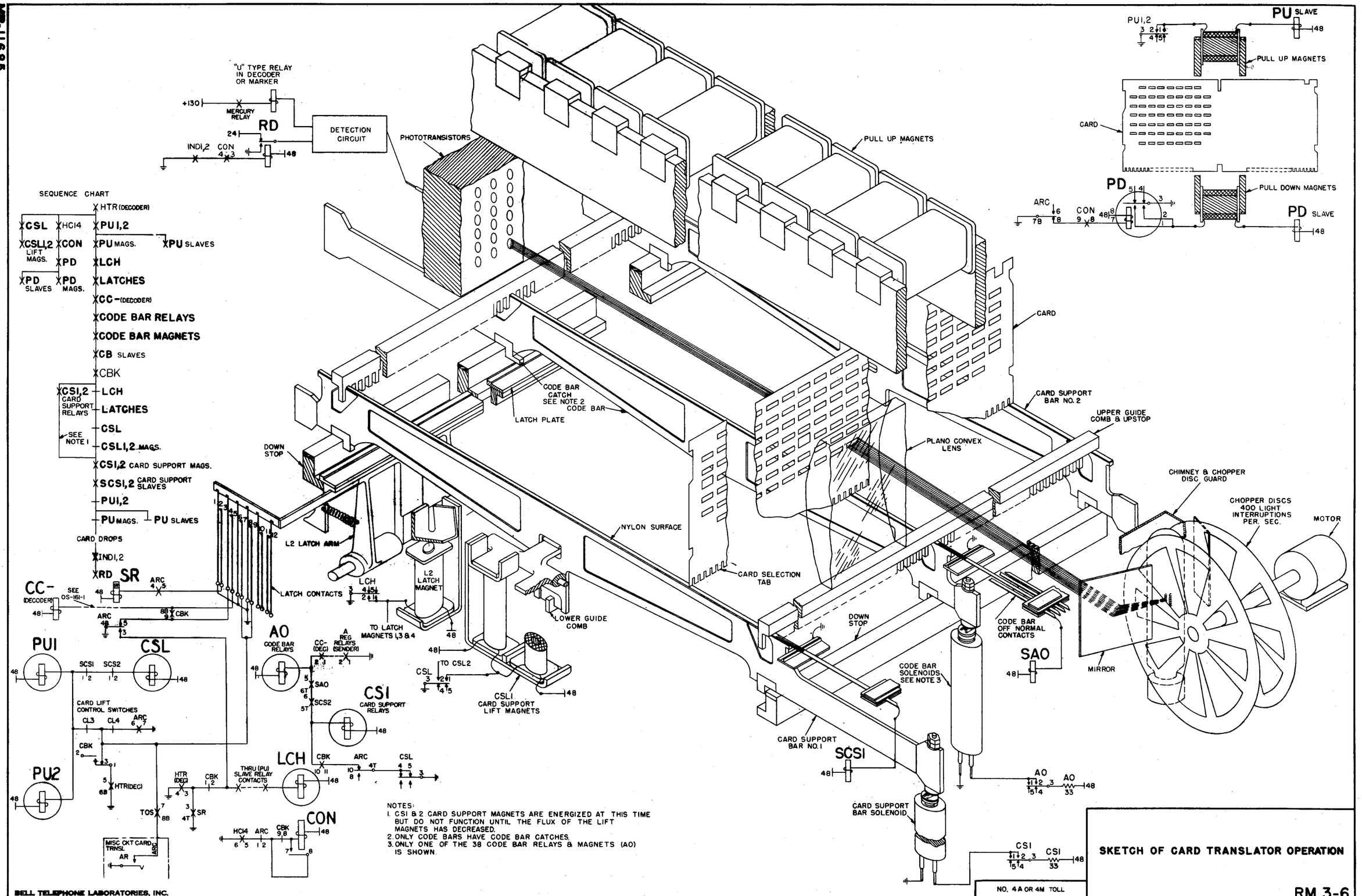

BELL TELEPHONE LABORATORIES, INC.

PRINTED IN U. S. A.

ORDER AS BSP ITEM MP-11685

TYPE OF INFORMATION	HOLE DESIGNATION	+130 VOLT BATTERY SUPPLIED BY RELAY	OS NO.	INFORMATION READ BY CIRCUIT	OS NO.	INFORMATION SENT TO CIRCUIT	OS NO.	INFORMATION USED BY CIRCUIT	OS NO.
PRETRANSLATION	NCA	CA	163-1	DECODER	164-1			DECODER	166-1
	CA4	CA	163-1	DECODER	164-1			SENDER	124-1
	CA5	CA	163-1	DECODER	164-1			SENDER	124-1
	CA6	CA	163-1	DECODER	164-1			SENDER	124-1
OUTGOING TRUNK APPEARANCE	IT	MKR	163-1	DECODER	164-1			DECODER	168-1
	TC	MKR	163-1	DECODER	164-1			DECODER	168-1
	ITC	MKR	163-1	DECODER	164-1			DECODER	168-1
TRAFFIC SEPARATION PEG COUNT	TS-	FAT	163-1	DECODER	164-1			DECODER	180-1
	TPC	FAT	163-1	DECODER	164-1			DECODER	180-1
TRUNK GROUP PEG COUNT AND OVER FLOW	TP-	RCD1	169-1	MARKER	164-1			MARKER	196-1
TRANSLATOR BOX NUMBER	HB	FAT	163-1	DECODER	164-1			DECODER	183-1
	BT-	FAT	163-1	DECODER	164-1			DECODER	183-1
	BU-	FAT	163-1	DECODER	164-1			DECODER	183-1
INDEX CHANNELS	INDI.2	ALWAYS PRESENT	185-1	DECODER	185-1			DECODER	163-1
				DECODER	185-1			DECODER	163-1
CLASS	CLT-	RCD1	169-1	MARKER	164-1			SENDER	193-1
	CLU-	RCD1	169-1	MARKER	164-1			SENDER	193-1
	CDLC	RCD1	169-1	MARKER	164-1			SENDER	193-1
ALTERNATE ROUTE PATTERN NUMBER	ART-	RCC	163-1	DECODER	164-1			DECODER	171-1
	ARU-	RCC	163-1	DECODER	164-1			DECODER	171-1
AREA CODE CONTROL	NAC	FAT	163-1	DECODER	164-1			DECODER	176-1
	AC	FAT	163-1	DECODER	164-1			DECODER	176-1
	AHA	FAT	163-1	DECODER	164-1			DECODER	176-1
	AFA	FAT	163-1	DECODER	164-1			DECODER	176-1
ROUTING INSTRUCTIONS	RI-	RI	163-1	DECODER	164-1			DECODER	167-1
									170-1
									171-1
CONTINUITY AND DIGIT CONTROL	CDC-	RCC	163-1	DECODER	164-1	MARKER	176-1	SENDER	194-1
CODE CONVERSION	CCHN	CCM	163-1	DECODER	164-1	MARKER	195-1	SENDER	195-1
	CCTN	CCM	163-1	DECODER	164-1	MARKER	195-1	SENDER	195-1
	CCUN	CCM	163-1	DECODER	164-1	MARKER	195-1	SENDER	195-1
	CCH-	CCM	163-1	DECODER	164-1	MARKER	195-1	SENDER	195-1
	CCT-	CCM	163-1	DECODER	164-1	MARKER	195-1	SENDER	195-1
	CCU-	CCM	163-1	DECODER	164-1	MARKER	195-1	SENDER	195-1
VARIABLE SPILL CONTROL	NSK	RCD1	169-1	MARKER	164-1			SENDER	194-1
	SK3	RCD1	169-1	MARKER	164-1			SENDER	194-1
	SK6	RCD1	169-1	MARKER	164-1			SENDER	194-1
TRUNK BLOCK CONNECTOR NUMBER	TCT-	MKR	163-1	DECODER	164-1			MARKER	191-1
	TCU-	MKR	163-1	DECODER	164-1			MARKER	191-1
TRUNK BLOCK RELAY NUMBER	TB-	MKR	163-1	DECODER	164-1	MARKER	192-1	MARKER	192-1
GROUP START	GST-	RCD2	169-1	MARKER	164-1			MARKER	192-1
	GSU-	RCD2	169-1	MARKER	164-1			MARKER	192-1
GROUP END	GET-	RCD2	169-1	MARKER	164-1			MARKER	192-1
	GEU-	RCD2	169-1	MARKER	164-1			MARKER	192-1

TRANSLATOR CARD CODING
READING AND USING INFORMATION

NO. 4A OR 4M TOLL

RM 3-7

MP-11714

ISSUE	1	2		
DATE	9-18-51	10-15-52		

BELL TELEPHONE LABORATORIES, INC.
PRINTED IN U. S. A.

ORDER AS BSP ITEM MP-11714

TABLE I: ARRANGEMENT FOR EACH DECODER AT A PRIMARY OUTLET (PO1)
(GROUND SUPPLY CIRCUITS 0,1,2,4,5 PROVIDED)

	ROUTE RELAYS ASSOCIATED WITH GROUND SUPPLY 0		ROUTE RELAYS ASSOCIATED WITH GROUND SUPPLY 1		ROUTE RELAYS ASSOCIATED WITH GROUND SUPPLY 2		ROUTE RELAY ASSOCIATED WITH GROUND SUPPLY 4		ROUTE RELAY ASSOCIATED WITH GROUND SUPPLY 5
ITEM 1	ROUTE RELAY FOR TRUNK GROUP TO PO IN DISTANT REGION (PO1 TO PO2)	(SEE NOTE 1) CROSS-CONNECT TO	ROUTE RELAY FOR TRUNK GROUP TO SC OTHER THAN HOME SC (PO1 TO SC2)	CROSS-CONNECT TO	ROUTE RELAY FOR TRUNK GROUP TO RC IN DISTANT REGION (PO1 TO RC2)	CROSS-CONNECT TO	ROUTE RELAY FOR TRUNK GROUP TO RC IN HOME REGION (PO1 TO RC1)	CROSS-CONNECT TO	ROUTE RELAY FOR TRUNK GROUP TO HOME SC (PO1 TO SC1)
ITEM 2	ROUTE RELAY FOR TRUNK GROUP TO PO IN HOME REGION. THIS PO HOMES ON A DIFFERENT SC THAN PO1 (PO1 TO PO3)	CROSS-CONNECT TO	ROUTE RELAY FOR TRUNK GROUP TO SC OTHER THAN HOME SC (PO1 TO SC3)	CROSS-CONNECT TO					
ITEM 3	ROUTE RELAY FOR TRUNK GROUP TO PO IN HOME REGION. THIS PO HOMES ON THE RC IN THE REGION (PO1 TO RO4)	CROSS-CONNECT TO							
ITEM 4	ROUTE RELAY FOR TRUNK GROUP TO PO HOMING ON SAME SC AS PO1 (PO1 TO PO5)	CROSS-CONNECT TO							

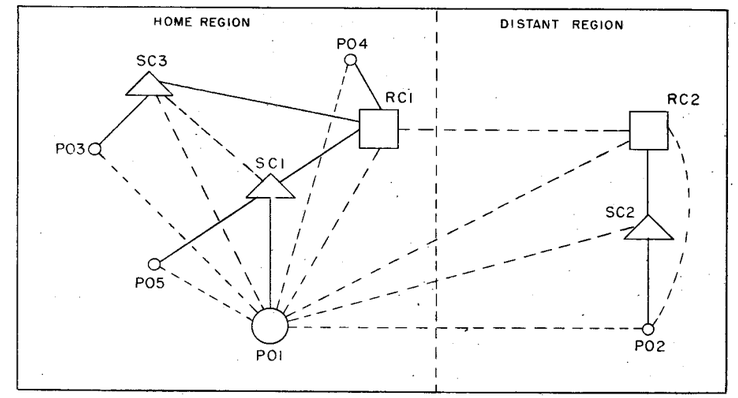

TABLE III: ARRANGEMENT FOR EACH DECODER AT A REGIONAL CENTER (RC1)
(GROUND SUPPLY CIRCUITS 0,1,2,3 PROVIDED)

	ROUTE RELAYS ASSOCIATED WITH GROUND SUPPLY 0		ROUTE RELAYS ASSOCIATED WITH GROUND SUPPLY 1		ROUTE RELAYS ASSOCIATED WITH GROUND SUPPLY 2		ROUTE RELAY ASSOCIATED WITH GROUND SUPPLY 3
ITEM 9	ROUTE RELAY FOR TRUNK GROUP TO PO IN DISTANT REGION (RC1 TO PO2)	(SEE NOTE 1) CROSS-CONNECT TO	ROUTE RELAY FOR TRUNK GROUP TO SC IN DISTANT REGION (RC1 TO SC2)	CROSS-CONNECT TO	ROUTE RELAY FOR TRUNK GROUP TO RC IN DISTANT REGION (RC1 TO RC2)	CROSS-CONNECT TO	ROUTE RELAY FOR TRUNK GROUP TO NC (RC1 TO NC)
ITEM 10	ROUTE RELAY FOR TRUNK GROUP TO PO IN HOME REGION, NOT HOMING ON RC1 (RC1 TO PO1)	CROSS-CONNECT TO	ROUTE RELAY FOR TRUNK GROUP TO SC IN HOME REGION (RC1 TO SC1)				
ITEM 11	ROUTE RELAY FOR TRUNK GROUP TO PO HOMING ON RC1 (RC1 TO PO3)						

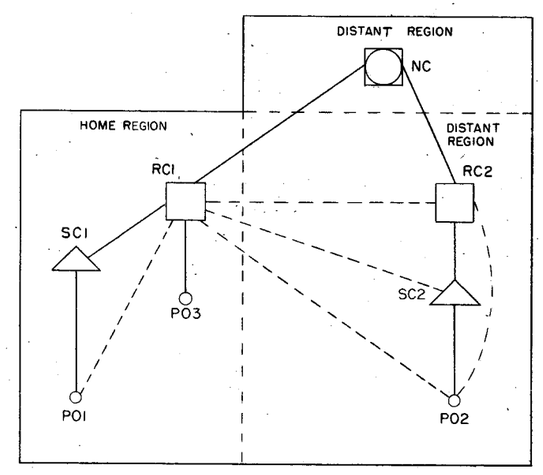

ASSOCIATION OF ROUTE RELAYS AND GROUND SUPPLY CIRCUITS, AND TYPICAL CROSS-CONNECTIONS BETWEEN ROUTE RELAYS ACCORDING TO DIFFERENT ORDERS OF CSP'S

RM 3-8

2 SHEETS, SHEET 1

NO. 4A OR 4M TOLL

ORDER AS BSP ITEM MP-11666

ISSUE	1	2
DATE	8-27-51	9-30-53

2 SHEETS, SHEET 1

MP-11666

BELL TELEPHONE LABORATORIES, INC.

PRINTED IN U. S. A.

MP-11666 2 SHEETS, SHEET 2

ISSUE	1	2		
DATE	8-27-51	9-10-53		

TABLE II: ARRANGEMENT FOR EACH DECODER AT A SECTIONAL CENTER (SCI)
(GROUND SUPPLY CIRCUITS 0,1,2,4 PROVIDED)

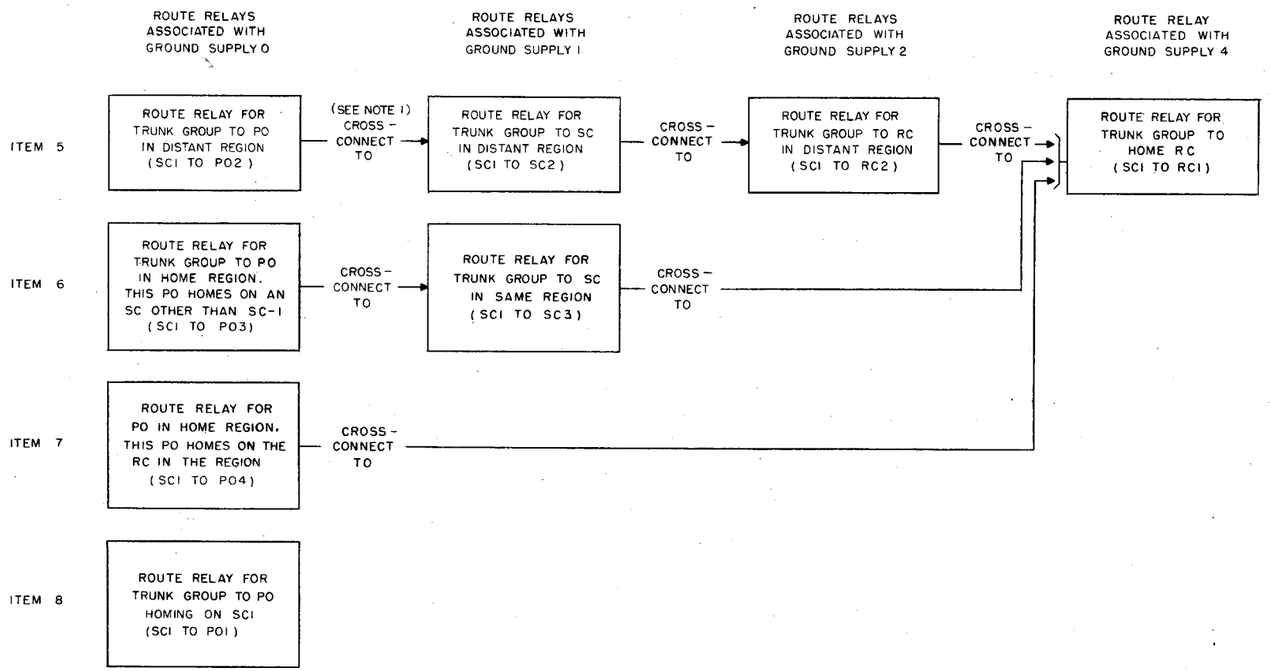

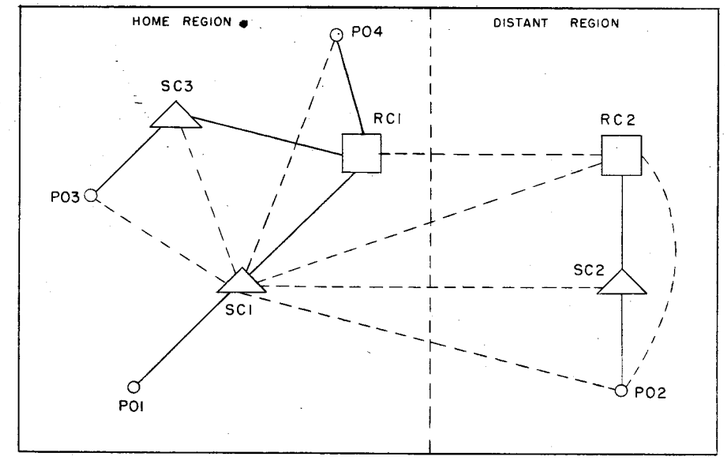

TABLE IV: ARRANGEMENT FOR EACH DECODER AT THE NATIONAL CENTER (NC)
(GROUND SUPPLY CIRCUITS 0,1,2 PROVIDED)

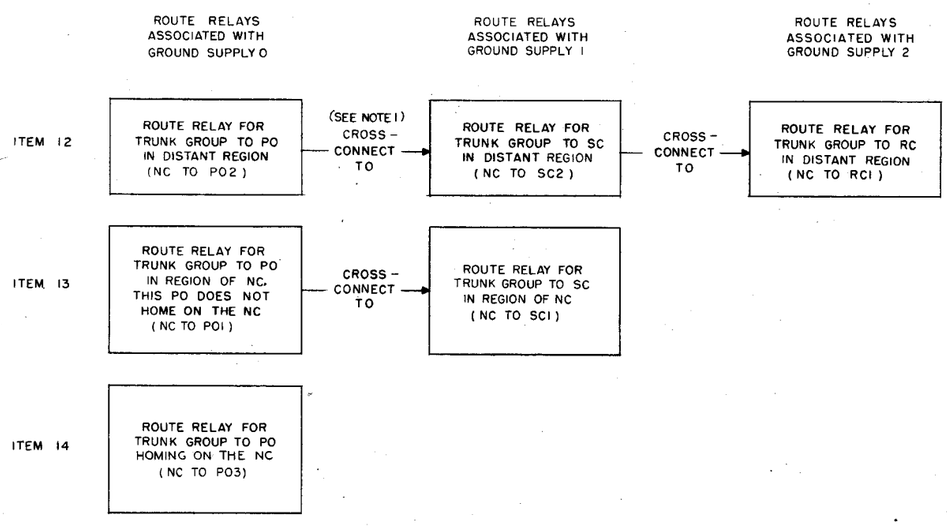

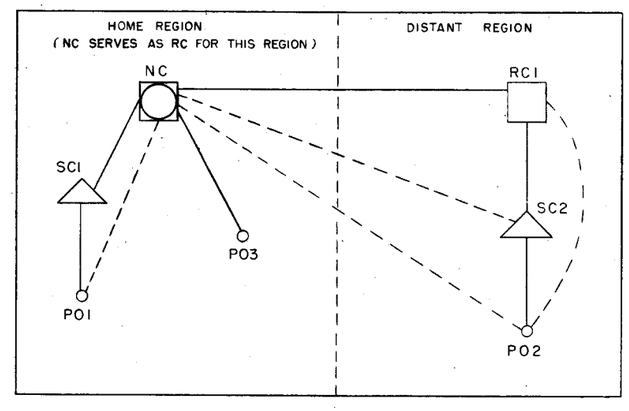

NOTES:

1 ALL CROSS-CONNECTIONS INDICATED ON THIS RM. REFER TO CROSS CONNECTIONS AT THE ALTERNATE ROUTE TRAFFIC CONTROL FRAME.

ASSOCIATION OF ROUTE RELAYS AND GROUND SUPPLY CIRCUITS, AND TYPICAL CROSS-CONNECTIONS BETWEEN ROUTE RELAYS ACCORDING TO DIFFERENT ORDERS OF CSP'S

NO. 4A OR 4M TOLL

2 SHEETS, SHEET 2

RM 3-8

BELL TELEPHONE LABORATORIES, INC.
PRINTED IN U. S. A.
ORDER AS BSP ITEM MP-11666

ALARM DATA

EQUIPMENT	TYPE OF ALARM	LAMPS: FRAME	LAMPS: AISLE	LAMPS: TROUBLE RECORDER FRAME	OS	ALARM RELEASE	EXPLANATION
SENDER LINK AND CONNECTOR	MAJOR	AL (RED)	GREEN		101-1	AR KEY	CALL NOT SERVED IN ONE TO TWO SECONDS WITH AN IDLE LINK CONTROLLER AND AN IDLE CONTROLLER CONNECTOR AVAILABLE.
SENDER LINK AND CONNECTOR	MAJOR	DLG (AT SENDER MAKE-BUSY)	GREEN		113-1	DL KEY	SENDER LINK NOT SERVED DUE TO LACK OF FACILITIES.
CONTROLLER CONNECTOR	MINOR	CB (WHITE)	GREEN		104-1	AR KEY	ALL LINK CONTROLLERS BUSY FOR 28 TO 58 SECONDS; OR CONTROLLER CONNECTOR FAILED TO RESTORE TO NORMAL.
CONTROLLER CONNECTOR	MAJOR	B (WHITE)	GREEN	BA:S-	104-1	BA KEY	TWO OR MORE CONNECTORS MADE BUSY IN THE SAME GROUP; OR A MAKE-BUSY PLUG IN AN EA OR EB JACK OF A LINK AND CONNECTOR FRAME WHEN A MAKE-BUSY PLUG IS IN THE ASSOCIATED CONNECTOR CBR JACK.
LINK CONTROLLER	MINOR		AMBER	TRR, CLR-	115-1	TR-AR KEY	CONTROLLER REQUESTED A TROUBLE RECORD WHILE RECORDER WAS BUSY.
LINK CONTROLLER	MAJOR	TA (WHITE)	GREEN		115-1	AR KEY	CONTROLLER FAILED TO RELEASE FROM THE TROUBLE RECORDER.
INCOMING SENDER	MINOR	SS (AT SENDER MAKE-BUSY)	GREEN		132-1 144-1	SSA KEY	STUCK SENDER.
OUTGOING SENDER	MINOR	SS (AT SENDER MAKE-BUSY)	AMBER		154-1	SSA KEY	STUCK SENDER.
INCOMING AND OUTGOING SENDERS	MINOR	GB (AT SENDER MAKE-BUSY)	NONE		114-1	GB KEY	ALL SENDERS IN GROUP BUSY.
INCOMING AND OUTGOING SENDERS	MAJOR		GREEN	GGB-	114-1	TR-AR KEY	FALSELY GROUNDED SENDER GROUP BUSY LEAD.
DECODER CONNECTOR	MAJOR		GREEN	DGR,CT,DCB-	158-1	DCA KEY	FALSE GROUND ON LEADS DRL, MRL, DTRL, MTRL, TRL, RLT, CF, CA4, CA5, OR CA6.
DECODER CONNECTOR	MAJOR		GREEN	DGR1,CT, DCB-	158-1	DCA KEY	FALSE GROUND ON LEADS A-, B-, C-, D-, E-, F-, SDTI, VO OR NVO.
DECODER CONNECTOR	MAJOR		GREEN	CT, DCB-	157-1	GT KEY	CONNECTOR HAS TIMED OUT.
DECODER CONNECTOR	MINOR		GREEN	GT, DCB-	157-1	GT KEY	CONNECTOR HAS TIMED OUT AND ITS TRAFFIC SEQUENCE FEATURE IS CANCELLED.
DECODER CONNECTOR	MINOR		GREEN	CGT	156-1	GT KEY	TRAFFIC SEQUENCE FEATURE CANCELLED IN ALL DECODER CONNECTORS.
DECODER	MAJOR	TA	GREEN	DTA, DB- DTRT	179-1	TR-AR KEY	A) DECODER HAS TIMED OUT AND FAILED IN ONE OF THESE FUNCTIONS: 1. TO SUMMON THE TROUBLE RECORDER. 2. TO SEND A TROUBLE RELEASE SIGNAL. 3. TO RESTORE TO NORMAL. B) THE DECODER BD LEAD IS FALSELY GROUNDED.

ALARM DATA

RM 3-9 4 SHEETS,SHEET 1

NO. 4A TOLL

BELL TELEPHONE LABORATORIES, INC.

ORDER AS BSP ITEM MP-11769

PRINTED IN U.S.A.

MP-11769 4 SHEETS, SHEET 1

ISSUE 1 ASM
DATE 1-18-52
R.B.B.

ISSUE	1	ASM
DATE	1-18-52	

R.B.B.

ALARM DATA

EQUIPMENT	LAMPS: TYPE OF ALARM	LAMPS: FRAME	LAMPS: AISLE	LAMPS: TROUBLE RECORDER FRAME	OS	ALARM RELEASE	EXPLANATION
DECODER	MINOR		AMBER	TRR	179-1	TR-AR KEY	DECODER REQUESTED A TROUBLE RECORD ON 1ST TRIAL.
DECODER	MAJOR			TRR	179-1	TR-AR KEY	DECODER REQUESTED A TROUBLE RECORD ON 2ND TRIAL.
DECODER	MINOR		GREEN	DBA	158-1	ADB KEY	ALL DECODERS IN GROUP BUSY FOR 41 TO 60 SECONDS.
INCOMING LINK AND CONNECTOR	MINOR	CH (WHITE)	GREEN		208-1	CH KEY	OPEN OR CROSS IN MP- RELAY CHAIN CIRCUITS; IF ALARM PERSISTS AFTER OPERATING CH KEY, OPERATE MT KEY TO DETERMINE WHICH CHAIN CIRCUIT IS DEFECTIVE.
OUTGOING LINK AND CONNECTOR	MINOR	CH (WHITE)	GREEN		207-1	CH KEY	SAME AS INCOMING LINK AND CONNECTOR.
TRUNK BLOCK CONNECTOR	MINOR	CH (WHITE)	GREEN		198-1	CH KEY	SAME AS INCOMING LINK AND CONNECTOR.
CARD TRANSLATOR	MAJOR	AL		ETB/HTB/ FTB/DFTB	186-1	AR KEY	CARD TRANSLATOR HAS ONE OF FOLLOWING TROUBLES: 1. LAMP SWITCH IN INCORRECT POSITION. 2. TRANSLATOR RESTORED TO SERVICE WITH CRANK, OR CARD LIFTS OFF-NORMAL, OR GUIDE BAR NOT PROPERLY SEATED. 3. EITHER INDEX CHANNEL OPERATES WHILE TRANSLATOR IS IDLE. THIS INDICATES EITHER A MOTOR OR LAMP FAILURE.
MARKER	MAJOR	TA	GREEN	MTA, MB-, DMB-, MTRT	218-1	TAR KEY	A) MARKER HAS TIMED OUT AND FAILED IN ONE OF THESE FUNCTIONS: 1. TO SUMMON THE TROUBLE RECORDER. 2. TO SEND A TROUBLE RELEASE SIGNAL. 3. TO RESTORE TO NORMAL. B) THE MARKER BM LEAD IS FALSELY GROUNDED.
MARKER	MINOR			TRR	218-1 219-1	TAR KEY	MARKER REQUESTED A TROUBLE RECORD ON 1ST TRIAL.
MARKER	MAJOR			TRR	218-1 219-1	TAR KEY	MARKER REQUESTED A TROUBLE RECORD ON 2ND TRIAL.
MARKER	MINOR		GREEN	MBA		AMB KEY	ALL MARKERS IN GROUP BUSY FOR 41 TO 60 SECONDS.
OVERFLOW TRUNKS	MINOR		AMBER	ORA		ORA KEY	OVERFLOW REGISTER SCORED ON OVERFLOW OR REORDER TRUNK GROUPS.
REORDER TRUNKS	MINOR	RO (AT SENDER MAKE-BUSY)	AMBER			ROA KEY	REORDER TRUNK HELD TOO LONG.

ALARM DATA

EQUIPMENT	LAMPS: TYPE OF ALARM	LAMPS: FRAME	LAMPS: AISLE	LAMPS: TROUBLE RECORDER FRAME	OS	ALARM RELEASE	EXPLANATION
FRAME IDENTIFICATION FREQUENCY SUPPLY	MAJOR	RED	GREEN		223-1	SA KEY	FRAME IDENTIFICATION FREQUENCY SUPPLY FAILURE. CAUSE OF TROUBLE CAN BE DETERMINED BY RED LAMPS AS EXPLAINED IN THE B.S.P.
FUSES	MINOR	FA(RED)	RED				1-1/3 AMPERE FUSE BLOWN.
FUSES	MAJOR	20A (RED)	RED				20 AMPERE FUSE BLOWN.
CARD TRANSLATOR	MAJOR			TTB	184-1		TWO OR MORE TRANSLATORS PLUGGED BUSY FOR SUBSTITUTION OF EMERGENCY TRANSLATOR.

ISSUE 1 ASM
DATE 1-18-52
R.B.B.

MP-11769 4 SHEETS, SHEET 3

ALARM DATA

RM 3-9 4 SHEETS, SHEET 3 NO. 4A TOLL

ORDER AS BSP ITEM MP-11769

BELL TELEPHONE LABORATORIES, INC.

PRINTED IN U.S.A.

ISSUE	1	ASM
DATE	1-18-52	

R.B.B.

ALARM DATA

IN USE LAMPS

LAMP DESIGNATION	OS	FUNCTIONAL MEANING
DB0-17	179-1	DECODER BUSY.
DCB0-19:0-2	157-1, 158-1	DECODER CONNECTOR.
DFTB0-17	186-1	DECODER FOREIGN AREA TRANSLATOR BUSY.
DFTS0-17	186-1	DECODER FOREIGN AREA TRANSLATOR EMERGENCY A-C SUPPLY.
DMB0-19	190-1	DECODER-MARKER BUSY.
ETB	186-1	EMERGENCY TRANSLATOR BUSY.
ETS	186-1	EMERGENCY TRANSLATOR EMERGENCY A-C SUPPLY.
FTB1-19	186-1	FOREIGN AREA TRANSLATOR BUSY.
FTS1-19	186-1	FOREIGN AREA TRANSLATOR EMERGENCY A-C SUPPLY.
HTB0-17	186-1	HOME TRANSLATOR BUSY.
HTS0-17	186-1	HOME TRANSLATOR EMERGENCY A-C SUPPLY.
ICB0-19	208-1	INCOMING CONNECTOR.
MKB IT OR C0-9 TC0-7	190-1, 218-1, 219-1	MARKER BUSY.
OCB0-19	207-1	OUTGOING CONNECTOR.
RO (AT SENDER MAKE-BUSY)		REORDER TRUNK.
RTO0-99	171-1	ALTERNATE TRUNK ROUTE.
S0-4	155-1	SENDER.
SLD0-29:A-F	101-1	SENDER LINK DELAY.
TBB0-14	198-1	TRUNK BLOCK CONNECTOR.

MISCELLANEOUS LAMPS

LAMP DESIGNATION	OS	FUNCTIONAL MEANING
ADB	158-1	ALL DECODERS BUSY.
AMB		ALL MARKERS BUSY.
BLC0-5:A-F	101-1	LINK AND CONNECTOR MADE BUSY.
CCB0-5:A-F	103-1	CONTROLLER CONNECTOR BUSY.
DLR0-17	228-1	DECODER LOST TROUBLE RECORD.
GBG (AT SENDER MAKE-BUSY)	114-1	GB KEY THROWN TO SILENCE GB ALARM.
LCB0-5:A-F	104-1	LINK CONTROLLER BUSY.
LF0-29:A-F (AT SENDER MAKE-BUSY)	114-1	LF PLUG IN SENDER MB JACK.
MLR IT OR C0-9 TC0-7	228-1	MARKER LOST TROUBLE RECORD.
ORG		ORA KEY THROWN TO SILENCE OR ALARM.
SMA	178-1, 132-1, 144-1	OPEN OR CROSSED SELECT MAGNET LEAD.
SSG	132-1, 144-1, 154-1	SS KEY THROWN TO SILENCE SS ALARM.
TRG	178-1, 220-1	RELEASE AFTER TRUNK NUMBER IDENTIFICATION.
WAG (AT SENDER MAKE-BUSY)	154-1	WA KEY THROWN TO CANCEL WAITING ASSIGNMENT FEATURE IN OUTGOING SENDERS.

BELL TELEPHONE LABORATORIES, INC.
PRINTED IN U.S.A.
ORDER AS BSP ITEM MP-11769

ISSUE	DATE
1	1-18-62

TABLE A
TRAFFIC SEPARATION REGISTERS

TRAFFIC SEPARATION RELAYS OPERATED DECODER INPUT ROW S2 11,12,13 OS 180-1	GROUP RELAYS OPERATED IN DECODER	TS RELAYS OPERATED FROM CARD ROW S0 7,8, AND 9 OS 180-1						
		TS0	TS1	TS2	TS0 AND TS1	TS0 AND TS2	TS1 AND TS2	TS0, TS1, TS2
		REGISTER LEADS GROUNDED						
TSA	TSG1	A1	B1	C1	D1	E1	F1	G1
TSB	TSG2	A2	B2	C2	D2	E2	F2	G2
TSA AND TSB	TSG3	A3	B3	C3	D3	E3	F3	G3
TSA AND TSC	TSG4	A4	B4	C4	D4	E4	F4	G4

TABLE B
TRUNK GROUP PEG COUNT AND OVERFLOW REGISTER CONTROL

TP RELAY OPERATED ROW S0 11, 12, 13 OS 196-1	PEG COUNT REGISTER LEAD GRD. - OS 196-1	OVERFLOW REGISTER LEAD GRD. - OS 196-1
0	PC0	OF0
1	PC1	OF1
2	PC2	OF2
0 AND 1	PC3	OF3
0 AND 2	PC4	OF4
1 AND 2	PC0	NONE
0,1 AND 2	NONE	OF0

TABLE C
CLASS INFORMATION

CLASS RECEIVING RELAYS READ BY MARKER FROM CARD T. ROW S0 22-29 OS 193-1 AND OS 164-1		CLASS REL.OPR. BY REC. RELAYS - OS-193-1	CLASS SIG. TO SDR. TYPE OF PULSING ROW R3 0-4 OS-193-1	CLASS CHECK ROW R0 16 OS-193-1	CLASS SIG. TO SDR. TRUNK CONDITION ROW R3 5-9 OS 193-1	CLASS CHECK ROW R0 17 OS 193-1	CLASS SIG. TO SDR. TRUNK CONDITION ROW R3 6 OS 193-1	CLASS CHECK ROW R0 18 OS 193-1	CDLC RELAY READ BY MKR.FROM C.T. ROW R8 0 OS 193-1	DLC CLASS SIG. TO SDR. ROW R3 7 OS 193-1
CLT	CLU									
T0	U4 AND U7	CL0	M	CLA					*	SEE NOTE
T0	U0 AND U1	CL1	DC	CLA					CDLC	-
T0	U0 AND U2	CL2	MF	CLA					*	SEE NOTE
T0	U1 AND U2	-	- NOT USED	-						
T0	U0 AND U4	-	-	-						
T0	U1 AND U4	CL5	SXD	CLA					CDLC	-
T0	U2 AND U4	CL6	SXD	CLA	XDD	CLB			CDLC	-
T0	U0 AND U7	CL7	SXD	CLA	XSG	CLB			CDLC	-
T0	U1 AND U7	CL8	LPD	CLA	SXR	CLB			*	SEE NOTE
T0	U2 AND U7	CL9	LFD	CLA					*	SEE NOTE
T1	U4 AND U7	CL10	LPD	CLA	XSG	CLB			*	SEE NOTE
T1	U0 AND U1	CL11	LFD	CLA	2DC	CLB			*	SEE NOTE
T1	U0 AND U2	CL12	LPD	CLA	XDDD	CLB			*	SEE NOTE
T1	U1 AND U2	CL13	LFD	CLA	XDD	CLB	XSG	CLC	*	SEE NOTE
T1	U0 AND U4	CL14	SXD	CLA	XDD	CLB	XSG	CLC	CDLC	-

TOLL COMPLETING MARKERS

NOTE- THE MARKER NORMALLY GROUNDS THE DLC LEAD TO THE SENDER TO OPERATE DLC RELAY, IF CDLC IS OPERATED - DLC WILL BE NORMAL FOR CLASSES MARKED * CDLC OPERATION IS OPTIONAL

TABLE D
CONTINUITY AND DIGIT CONTROL

CDC - CONTINUITY AND DIGIT CONTROL RECORDED IN DEC. FROM CARD TRNSL. TBL. REC. CARD ROW R8 25-29 OS 164-1	DIGIT CONT. RECORDED IN MARKER FROM DECODER TBL.REC.CARD ROW R4 11-14 OS 176-1	CONTINUITY CONTROL RECORDED IN MKR. FROM DECODER TBL. REC. CARD ROW R4 9-10 OS 176-1	DIGIT CONT. TRANSMITTED FROM MARKER TO SENDER TBL.REC.CARD ROW R3 11-13 OS 194-1	DIGIT CONT. CHECK MKR. - SDR. TRANSMITTING TBL.REC.CARD ROW R0 28 OS 194-1
CDC4 AND CDC7	NDG	CLCT	-	-
CDC0 AND CDC1	NDG	MLCT	-	-
CDC0 AND CDC2	ODG	CLCT	ODG	DGA
CDC1 AND CDC2	ODG	MLCT	ODG	DGA
CDC0 AND CDC4	4DG	CLCT	4DG	DGA
CDC1 AND CDC4	4DG	MLCT	4DG	DGA
CDC2 AND CDC4	5DG	CLCT	5DG	DGA
CDC0 AND CDC7	5DG	MLCT	5DG	DGA
CDC1 AND CDC7	NOT USED	CLCT	-	-
CDC2 AND CDC7	NOT USED	CLCT	-	-

NOTE - NDG OR DGA MUST BE INDICATED FOR REGULAR MARKER RELEASE

TABLE E
ROUTING INSTRUCTION

ROUTING INSTRUCTION READING RELAYS AS READ BY DECODER ROW R8 20-25 OS 164-1	DECODER ROUTING RELAYS OPERATED ROW R5 0-10 OS 167-1	PRINCIPAL CITY ROUTING TAKEN FROM 3D CARD ROW R5 9, 10 OS 165-1
RI4 AND RI7	CC	PCR
RI0 AND RI1	CR	PCR
RI0 AND RI2	RR	PCR
RI1 AND RI2	FOF	PCR
RI0 AND RI4	FRO	PCR
RI1 AND RI4	FMB	PCR
RI2 AND RI4	FST	PCR
RI0 AND RI7	NPCR	NPCR
RI1 AND RI7	SPARE	
RI2 AND RI7	SPARE	

TABLE F
VARIABLE SPILLING CONTROL

VARIABLE SPILLING CONTROL AS READ BY MARKER OR BY CODE MATCHING ROW R7 9-11 OS 176-1	VARIABLE SPILLING CONTROL LEADS GROUNDED TO SENDER ROW R3 15-17 OS 194-1	VARIABLE SPILL CONTROL CHECK RELAY OPERATED ROW R0 20 OS 194-1
NSK	NSK	SKA
SK3	SK3	SKA
SK6	SK6	SKA

TABLE G
FRAME IDENTIFICATION AND SELECTION

FRAME IDENTIFICATION FREQUENCY COMBINATIONS ROW R3 22-29 OS 204-1			FRAME NUMBER	INC. FRAME GROUP ROW S4 30-49 OS 205-1	INC. FRAME ODD OR EVEN ROW S1 30-31 OS 205	OUT. FRAME GROUP ROW S2 30-49 OS 205-1	OUT. FRAME ODD OR EVEN ROW S1 32,33 OS 205
FA	FB	FC	0	0	E	0	E
FA	FB	FD	18	9	E	9	E
FA	FB	FE	6	3	E	3	E
FA	FB	FF	12	6	E	6	E
FA	FB	FG	20	10	E	10	E
FA	FB	FH	34	17	E	17	E
FA	FC	FD	2	1	E	1	E
FA	FC	FE	14	7	E	7	E
FA	FC	FF	8	4	E	4	E
FA	FC	FG	22	11	E	11	E
FA	FC	FH	36	18	E	18	E
FA	FD	FE	17	8	0	8	0
FA	FD	FF	5	2	0	2	0
FA	FE	FF	11	5	0	5	0
FA	FE	FH	25	12	0	12	0
FA	FF	FH	27	13	0	13	0
FB	FC	FD	10	5	E	5	E
FB	FC	FE	4	2	E	2	E
FB	FC	FF	16	8	E	8	E
FB	FC	FG	26	13	E	13	E
FB	FC	FH	38	19	E	19	E
FB	FD	FE	9	4	0	4	0
FB	FD	FF	15	7	0	7	0
FB	FD	FG	32	16	E	16	0
FB	FE	FF	3	1	0	1	0
FB	FE	FG	28	14	E	14	E
FB	FE	FH	23	11	0	11	0
FB	FF	FG	30	15	E	15	E
FC	FD	FE	13	6	0	6	0
FC	FD	FF	7	3	0	3	0
FC	FD	FG	24	12	E	12	E
FC	FE	FF	19	9	0	9	0
FC	FE	FH	21	10	0	10	0
FD	FE	FF	1	0	0	0	0
FD	FE	FG	35	17	0	17	0
FD	FE	FH	31	15	0	15	0
FD	FF	FG	37	18	0	18	0
FD	FF	FH	29	14	0	14	0
FE	FF	FG	39	19	0	19	0
FE	FF	FH	33	16	0	16	0

TROUBLE ANALYSIS DATA
CHARTS

NO. 4A TOLL

RM3-10

TROUBLE ANALYSIS DATA

INDEX OF DECODER AND MARKER PUNCHES

PUNCH DESIGNATION	OS	CARD COORDINATES	PUNCH SOURCE	FUNCTIONAL MEANING
6D TRANSLATOR				
H	164-1	S0 14	D	HOME BOX
T0,1	164-1	S0 15	D	TRANSLATOR TENS
U $\frac{2}{5}$	165-1	S0 17	D	TRANSLATOR UNITS
AC				
AC	164-1	R8 2	D	AREA CODE
AFA				
AFA	164-1	R8 4	D	ALTERNATE FOREIGN AREA
AHA				
AHA	164-1	R8 3	D	ALTERNATE HOME AREA
ALTERNATE ROUTE				
T $\frac{2}{5}$	164-1	R8 5	D	TENS
U $\frac{2}{5}$	164-1	R8 10	D	UNITS
CA4				
CA4	124-1,136-1	S0 1	D	COME AGAIN - 4 DIGITS
CA5				
CA5	124-1,136-1	S0 2	D	COME AGAIN - 5 DIGITS
CA6				
CA6	124-1,136-1	S0 3	D	COME AGAIN - 6 DIGITS
CDC				
CDC $\frac{2}{5}$	164-1	R8 25	D	CONTINUITY AND DIGIT CONTROL
CDLC				
CDLC	164-1	R8 0	M	CANCEL DELAY LOOP CLOSURE
CHANNEL				
L0-9	212-1	S0 50	M	LEFT
R0-9	212-1	R8 50	M	RIGHT
CHK				
CHK	177-1	R1 12	DC	CHECK
CLASS				
T0,1	164-1	S0 22	M	CLASS TENS
$\frac{2}{5}$	164-1	S0 25	M	CLASS UNITS

PUNCH DESIGNATION	OS	CARD COORDINATES	PUNCH SOURCE	FUNCTIONAL MEANING
CODE BARS				
A $\frac{2}{5}$	162-1	S3 0	CT	"A" DIGIT
B $\frac{2}{5}$	162-1	S3 5	CT	"B" DIGIT
C $\frac{2}{5}$	162-1	S3 10	CT	"C" DIGIT
D $\frac{2}{5}$	162-1	S3 15	CT	"D" DIGIT
E $\frac{2}{5}$	162-1	S3 20	CT	"E" DIGIT
F $\frac{2}{5}$	162-1	S3 25	CT	"F" DIGIT
CODE BARS				
CG $\frac{2}{4}$	162-1	S2 22	CT	CARD GROUP
NVO	162-1	S2 21	CT	NOT VIA ONLY
VO	162-1	S2 20	CT	VIA ONLY
CODE CONVERSION				
HN	164-1	R7 12	D	NO CODE CONVERSION HUNDREDS
TN	164-1	R7 13	D	NO CODE CONVERSION TENS
UN	164-1	R7 14	D	NO CODE CONVERSION UNITS
H $\frac{2}{5}$	164-1	R7 15	D	CODE CONVERSION HUNDREDS
T $\frac{2}{5}$	164-1	R7 20	D	CODE CONVERSION TENS
U $\frac{2}{5}$	164-1	R7 25	D	CODE CONVERSION UNITS
CONNECTOR PREFERENCE CONTROL				
CNE	190-1,198-1	S2 51	M	CONNECTOR EVEN
CNO	190-1,198-1	S2 50	M	CONNECTOR ODD
ICB	208-1	S2 54	M	INCOMING CONNECTOR BUSY
OCB	207-1	S2 53	M	OUTGOING CONNECTOR BUSY
TCB	198-1	S2 52	M	TRUNK BLOCK CONNECTOR BUSY
CS1,2				
CS1,2	162-1	S2 28	CT	CARD SUPPORT

TROUBLE ANALYSIS DATA
INDEX OF DECODER AND MARKER PUNCHES
RM 3-11 8 SHEETS, SHEET 1

NO.: 4A OR 4M TOLL

ORDER AS BSP ITEM MP- 11771

BELL TELEPHONE LABORATORIES, INC.

PRINTED IN U.S.A.

MP-11771 8 SHEETS, SHEET 1

ISSUE 1 WAD 2 2-2-54
DATE 1-18-52 1-6-54
R.B.B.

ISSUE	1	WAD	2
DATE	1-18-52	1-6-54	

R.B.B.

TROUBLE ANALYSIS DATA

INDEX OF DECODER AND MARKER PUNCHES

PUNCH DESIGNATION	OS	CARD COORDINATES	PUNCH SOURCE	FUNCTIONAL MEANING
DIM				
DIM		R6 0	CT	DIM EXCITER LAMP
D				
TR1	160-1, 174-1	S8 8	D	DECODER FIRST TRIAL
TR2	160-1, 174-1	S8 9	D	DECODER SECOND TRIAL
DECODER				
0-17	178-1	S8 12	D	DECODER NUMBER
DECODER CONNECTOR				
C0-2	178-1, 220-1	S5 27	DC	CONNECTOR
T0-2	178-1, 220-1	S5 14	DC	TENS
U0-9	178-1, 220-1	S5 17	DC	UNITS
DECODER CROSS				
X 6DT	167-1, 179-1	S8 34	D	CROSS 6 DIGIT TRANSLATION
X CA	124-1, 136-1, 179-1	S8 30	D	CROSS COME AGAIN
X CF	174-1, 179-1	S8 36	D	CROSS CARD FAILURE
X CRK	173-1	S8 33	D	CROSS RELAY CHECK
X DRL	124-1, 136-1, 166-1, 179-1	S8 38	D	CROSS DECODER RELEASE
X IK	160-1, 179-1	S8 32	D	CROSS INTEGRITY CHECK
X REC	179-1	S8 31	D	CROSS RECORDING SIGNAL
X RLT	177-1, 179-1	S8 39	D	CROSS RELEASE AFTER TRANSLATION
X TRB	178-1, 179-1, 220-1	S8 35	D	CROSS TROUBLE RECORDER BUSY
X TRL	178-1, 179-1	S8 37	D	CROSS TROUBLE RELEASE
DECODER INPUT				
3D	124-1, 136-1	S2 0	D	3 DIGIT
5BD	160-1	S2 14	D	NO. 5 BOARD
6D	124-1, 136-1	S2 1	D	6 DIGITS
6DA	124-1, 136-1, 160-1	S2 2	D	6 DIGITS AVAILABLE
CFM	160-1, 175-1	S2 8	D	CARD FAILURE MEMORY
CK1	160-1	S2 7	D	INTEGRITY CHECK
NR0	160-1	S2 6	D	NO REORDER
NV0	162-1	S2 4	D	NOT VIA ONLY

PUNCH DESIGNATION	OS	CARD COORDINATES	PUNCH SOURCE	FUNCTIONAL MEANING
DECODER INPUT (Contd.)				
PF	160-1	S2 9	D	SENDER PREFERENCE
TSA	160-1, 202-1	S2 11	D	TRAFFIC SEPARATION
TSB	160-1	S2 12	D	TRAFFIC SEPARATION
TSC	160-1	S2 13	D	TRAFFIC SEPARATION
VO	162-1	S2 3	D	VIA ONLY
DECODER INPUT CODE				
A $\frac{2}{5}$	162-1	S4 0	D	"A" DIGIT
B $\frac{2}{5}$	162-1	S4 5	D	"B" DIGIT
C $\frac{2}{5}$	162-1	S4 10	D	"C" DIGIT
D $\frac{2}{5}$	162-1	S4 15	D	"D" DIGIT
E $\frac{2}{5}$	162-1	S4 20	D	"E" DIGIT
F $\frac{2}{5}$	162-1	S4 25	D	"F" DIGIT
DECODER PROGRESS				
6DK	162-1	R2 22	CT	6 DIGIT CHECK
ATB	170-1, 172-1	R1 2	D	ALL TRUNKS BUSY
ARS	173-1	R1 4	D	ALTERNATE ROUTE SELECTED
ARST	171-1	R2 12	D	ALTERNATE ROUTE START
CAK	166-1	R2 13	D	COME AGAIN CHECK
CBK	162-1	R2 6	CT	CODE BAR CHECK
CCK	161-1	R2 5	D	CODE CUT-IN CHECK
CK3	160-1	R2 4	D	INTEGRITY CHECK
CKG	155-1, 177-1	R2 0	D	CIRCUIT GROUNDING
COP1	163-1	R2 10	D	CARD OPERATED INDICATION
COP2	163-1	R2 11	D	CARD OPERATED INDICATION

TROUBLE ANALYSIS DATA
INDEX OF DECODER AND MARKER PUNCHES
8 SHEETS, SHEET 2 RM 3-11

NO. 4A OR 4M TOLL

TROUBLE ANALYSIS DATA

INDEX OF DECODER AND MARKER PUNCHES

PUNCH DESIGNATION	OS	CARD COORDINATION	PUNCH SOURCE	FUNCTIONAL MEANING
DECODER PROGRESS (Contd.)				
DBS	165-1	R2 18	D	DUPLICATE F.A.T. BOX SHIFT
DCB	170-1,172-1	R1 0	D	DISCONNECT CODE BARS
DCB2	170-1,172-1	R1 1	D	DISCONNECT CODE BARS AUXILIARY
DRL	124-1,136-1,166-1	R1 8	D	DECODER RELEASE
GPL	173-1	R1 3	D	SUBGROUP LOCK
HBA	167-1	R2 14	D	HOME BOX AUXILIARY
HBI	172-1	R2 29	D	HOME BOX INDICATED
HTK	161-1	R2 1	D	HOME TRANSLATOR CHECK
IT	188-1,188-2	R2 23	D	INTERTOLL MARKER
ME	168-1	R2 26	D	MARKER ENGAGED
NC	174-1,175-1	R2 8	D	NO CARD
NCT	162-1,174-1,175-1	R2 7	D	NO CARD TIMING
R6D	167-1	R2 20	D	READ 6 DIGITS
RCA	167-1,170-1,172-1	R2 28	D	RESTORE CARD ADVANCE
RCD	167-1,172-1	R2 27	D	RESTORE CARD AND DISCONNECT DECODER
RCRR	173-1	R2 25	D	RESTORE CARD RELAY-TO-RELAY OPERATION
RDRL	166-1	R1 7	D	RESTORE AND DECODER RELEASE
RHC	167-1	R2 19	D	RESTORE HOME CONNECTOR
RLT	177-1	R1 9	D	RELEASE AFTER TRANSLATION
SMC	168-1	R2 3	D	INCOMING TRUNK ON "TC" TRAIN
SMC0	168-1	R2 15	D	SELECT MAGNET CUT-OFF
SMI	168-1	R2 2	D	INCOMING TRUNK ON "IT" TRAIN
TBY	165-1	R2 17	D	TRANSLATOR BUSY
TC	188-2	R2 24	D	TOLL COMPLETING MARKER
TID	165-1	R2 16	D	TRANSLATOR IDLE
TCD	176-1	R1 5	D	TRANSFER CODE DIGITS
TCK	161-1	R2 21	D	TRANSLATOR CONNECTOR CHECK

PUNCH DESIGNATION	OS	CARD COORDINATES	PUNCH SOURCE	FUNCTIONAL MEANING
DECODER PROGRESS (Contd.)				
TKS	170-1,172-1	R1 6	D	TRUNK SELECTED
VCR	175-1	R2 9	D	VACANT CODE ROUTING
DECODER ROUTE ADVANCE				
G0-3	173-1	S1 10	D	SUBGROUP CHAIN TEST
GB	173-1	S1 14	D	SUBGROUP BUSY
GS0-5	173-1	S1 4	D	TRUNK GROUP GROUND SUPPLY
MB	173-1	S1 16	D	MASTER BUSY
RA	160-1,170-1	S1 0	D	ROUTE ADVANCE
RA1-3	170-1	S1 1	D	ROUTE ADVANCE CARD TO CARD
RLS	173-1	S1 15	D	CHECK RELEASE OF SUBGROUP "GB" RELAY
RO	173-1	S1 17	D	REORDER
ROIT	168-1	S1 18	D	REORDER REQUEST ON "IT" TRAIN
ROTC	168-1	S1 19	D	REORDER REQUEST ON "TC" TRAIN
DECODER ROUTING INSTRUCTIONS				
CC	170-1	R5 0	D	CARD-TO-CARD
CR	171-1	R5 1	D	CARD-TO-RELAY
FOF	167-1,191-1	R5 3	D	FOLLOW-WITH-OVERFLOW
FMB	167-1,191-1	R5 4	D	FOLLOW-WITH-MASTER BUSY
FRO	167-1,191-1	R5 5	D	FOLLOW-WITH-REORDER
FST	167-1,191-1	R5 6	D	FOLLOW-WITH-SECOND TRIAL
NPCR	165-1	R5 10	D	NO PRINCIPAL CITY ROUTING
PCR	165-1	R5 9	D	PRINCIPAL CITY ROUTING
RR	171-1	R5 2	D	RELAY-TO-RELAY
DECODER TIME-OUT				
FTD	179-1	S8 52	D	FOREIGN TRANSLATOR DELAY TIMING
MD	179-1	S8 53	D	MARKER DELAY TIMING
TBD	179-1	S8 54	D	TRUNK BLOCK DELAY TIMING
WT	179-1	S8 51	D	WORK TIMER

TROUBLE ANALYSIS DATA
INDEX OF DECODER AND MARKER PUNCHES
RM 3-11 8 SHEETS, SHEET 3

NO. 4A OR 4M TOLL

ORDER AS BSP ITEM MP-11771

BELL TELEPHONE LABORATORIES, INC.

PRINTED IN U.S.A.

MP-11771 8 SHEETS, SHEET 3

ISSUE	1	WAD	2
DATE	1-18-52	1-6-54	

R.B.B.

ISSUE	1	2
DATE	1-18-52	1-6-54
	WAD	R.B.B.

TROUBLE ANALYSIS DATA

INDEX OF DECODER AND MARKER PUNCHES

PUNCH DESIGNATION	OS	CARD COORDINATION	PUNCH SOURCE	FUNCTIONAL MEANING
DP SDR				
0-2	178-1, 220-1	S6 24	DPS	DIAL PULSE SENDER
FRAME IDENTIFICATION				
FA-FH	204-1	R3 22	M	FRAME IDENTIFICATION FREQUENCIES LOCKED-IN
IC	205-1	R3 20	M	INCOMING FRAME CUT-IN
OC	205-1	R3 21	M	OUTGOING FRAME CUT-IN
GROUP END				
T0, 1	164-1	R6 23	M	GROUP END TENS
U $\frac{2}{5}$	164-1	R6 25	M	GROUP END UNITS
GROUP START				
T0, 1	164-1	R6 16	M	GROUP START TENS
U $\frac{2}{5}$	164-1	R6 18	M	GROUP START UNITS
INCOMING FRAME GROUP				
I 0-19	205-1	S4 30	M	INCOMING FRAME GROUP
INCOMING FRAME-OUTGOING FRAME				
EV	205-1	S2 40	M	EVEN
OD	205-1	S2 41	M	ODD
EV	205-1	S2 42	M	EVEN
OD	205-1	S2 43	M	ODD
INCOMING SWITCH				
SW 0-9	220-1	S4 50	IL	INCOMING SWITCH
JUNCTOR CONTROL				
JC 0-19	209-1	SO 30	M	JUNCTOR CUT-IN
JUNCTOR PATTERN				
JP 0-17	210-1	R8 30	M	JUNCTOR PATTERN
JPN	210-1	R8 49	M	NORMAL JUNCTOR PATTERN

PUNCH DESIGNATION	OS	CARD COORDINATION	PUNCH SOURCE	FUNCTIONAL MEANING
JUNCTOR WALKING				
CHB	212-1	S 2 55	M	ALL CHANNELS BUSY
RTA-RTD	213-1	S2 56	M	CHANNEL RETEST
LATCH MAGNETS				
L 1-4	161-1	S2 15	CT	LATCH MAGNETS
M				
M TR1	190-1	S8 10	M	MARKER FIRST TRIAL
M TR2	190-1	S8 11	M	MARKER SECOND TRIAL
MARKER CROSS				
X	219-1	S7 30	M	MASTER CROSS
XI	205-1, 219-1	S7 38	M	CROSS INCOMING FRAME
XILS	212-1, 219-1	S7 40	M	CROSS INCOMING LINK SLEEVE
XIPS	206-1, 215-1	S7 32	M	CROSS INCOMING PRIMARY SELECT MAGNET
XIS	216-1, 219-1	S7 31	M	CROSS INCOMING TRUNK SLEEVE
XJP	210-1, 219-1	S7 39	M	CROSS JUNCTOR PATTERN
XJS	212-1, 219-1	S7 42	M	CROSS JUNCTOR SLEEVE
XK	210-1, 215-1, 219-1	S7 36	M	CROSS CHECK
XMRL	217-1	S7 53	M	CROSS MARKER RELEASE LEAD
XMS	203-1, 219-1	S7 35	M	CROSS MARKER SLEEVE
XO	205-1, 219-1	S7 37	M	CROSS OUTGOING FRAME
XOLS	210-1, 212-1, 219-1	S7 41	M	CROSS OUTGOING LINK SLEEVE
XRCK	167-1, 170-1, 172-1, 197-1, 219-1	S7 47	M	CROSS REGISTER CHECK LEAD
XSM	215-1, 219-1	S7 43	M	CROSS SELECT MAGNET
XSMI	215-1, 219-1	S7 44	M	CROSS SELECT MAGNET INCOMING
XSMO	215-1, 219-1	S7 45	M	CROSS SELECT MAGNET OUTGOING
XST	198-1, 207-1, 208-1, 219-1	S7 34	M	CROSS START LEAD
XSTR	219-1, 220-1	S7 52	M	CROSS SENDER TROUBLE RELEASE

BELL TELEPHONE LABORATORIES, INC.
PRINTED IN U.S.A.
NO. 4A OR 4M TOLL
ORDER AS BSP ITEM MP-11771

TROUBLE ANALYSIS DATA

INDEX OF DECODER AND MARKER PUNCHES

PUNCH DESIGNATION	OS	CARD COORDINATION	PUNCH SOURCE	FUNCTIONAL MEANING
MARKER CROSS (Contd.)				
XTB	199-1, 219-1	S7 33	M	CROSS TRUNK BLOCK
XTIF	208-1, 219-1	S7 54	M	CROSS TWO INCOMING FRAMES
XTKS	170-1, 172-1, 202-1, 219-1	S7 48	M	CROSS TRUNK SELECTED LEAD
XTL	193-1, 194-1, 195-1, 219-1	S7 46	M	CROSS TRANSMITTING LEAD
XTOF	207-1, 219-1	S7 55	M	CROSS TWO OUTGOING FRAMES
XTR	219-1, 220-1	S7 50	M	CROSS MARKER TROUBLE RELEASE LEAD
XTRL	174-1, 202-1, 219-1, 220-1	S7 51	M	CROSS TROUBLE RELEASE RELAY OPERATE PATH
MARKER - IT OR COMB.				
0-9	220-1	S7 10	M	MARKER "IT" OR "COMB"
MARKER PROGRESS				
A	216-1	R0 4	M	"A" CHANNEL TEST
AK	215-1	R0 0	M	"A" LINK CHECK
ATB	201-1, 202-1	R1 22	M	ALL TRUNKS BUSY
B	216-1, 217-1	R0 12	M	"B" LINK CONTINUITY AND FALSE GROUND TEST
BK	210-1	R0 1	M	"B" LINK CHECK
C	216-1	R0 5	M	"C" CHANNEL TEST
CCT	216-1	R0 7	M	CHANGE AND CANCEL CONTINUITY TEST
CHS	212-1	R0 3	M	CHANNEL SELECTED
CK	215-1	R0 2	M	"C" LINK CHECK
CKG	190-1	R1 15	M	CHECKING GROUND
CON1	216-1	R0 10	M	CONTINUITY
GCK	200-1	R1 19	M	TRUNK GROUP CUT-OFF CHECK
HMG	216-1	R0 6	M	HOLD MAGNETS GROUNDED
ICK	208-1	R1 26	M	INCOMING CONNECTOR CHECK
IFK	208-1	R1 28	M	INCOMING FRAME CHECK

PUNCH DESIGNATION	OS	CARD COORDINATION	PUNCH SOURCE	FUNCTIONAL MEANING
MARKER PROGRESS (Contd.)				
MRL	217-1	R0 14	M	MARKER RELEASE
MT	216-1	R0 11	M	MARKER TRANSFER
OCK	207-1	R1 25	M	OUTGOING CONNECTOR CHECK
OFK	207-1	R1 27	M	OUTGOING FRAME CHECK
OSC	203-1, 216-1, 217-1	R0 13	M	OUT SLEEVE CONTINUITY
RCK	197-1	R1 16	M	ROUTE REGISTRATION CHECK
RL	217-1	R0 15	M	RELEASE
SCT	203-1, 216-1	R1 21	M	SLEEVE CONTINUITY TEST
SG	203-1, 216-1	R1 24	M	SLEEVE GUARD
SK	214-1	R1 29	M	SELECT MAGNET LOCK-OUT CHECK
T1R1	216-1	R0 9	M	"T1" AND "R1" CONTINUITY TEST "OK"
TB	202-1	R1 23	M	TRUNKS BUSY
TBK	199-1	R1 18	M	TRUNK BLOCK CHECK
TCK	198-1	R1 17	M	TRUNK BLOCK CONNECTOR CHECK
TKS	170-1, 172-1, 202-1	R1 20	M	TRUNK SELECTED
TR	216-1	R0 8	M	"T" AND "R" CONTINUITY TEST "OK"
MARKER REGISTRATION				
0DG	176-1	R4 11	M	"0" DIGITS
4DG	176-1	R4 12	M	"4" DIGITS
5DG	176-1	R4 13	M	"5" DIGITS
CLCT	176-1	R4 10	M	CANCEL LOOP CONTINUITY TEST
FOF	191-1	R4 3	M	FOLLOW-WITH-OVERFLOW
FMB	191-1	R4 4	M	FOLLOW-WITH-MASTER BUSY
FRO	191-1	R4 5	M	FOLLOW-WITH-REORDER
FST	191-1	R4 6	M	FOLLOW-WITH-SECOND TRIAL
HLD	170-1, 172-1, 191-1	R4 7	M	HOLD
MB	171-1, 190-1	R4 0	M	MASTER BUSY
MLCT	176-1	R4 9	M	MAKE LOOP CONTINUITY TEST
NDG	176-1	R4 14	M	NO DIGITS
PRO	181-1	R4 2	M	OVERLOAD ANNOUNCEMENT

TROUBLE ANALYSIS DATA
INDEX OF DECODER AND MARKER PUNCHES
RM 3-11 8 SHEETS, SHEET 5

NO. 4A OR 4M TOLL

BELL TELEPHONE LABORATORIES, INC.

ISSUE 1 WAD 2 R.E.C. DATE 1-18-52 1-6-54 R.B.B.

MP-11771 8 SHEETS, SHEET 5

ISSUE	1	WAD	2	R.E.K.
DATE	1-18-52		1-6-54	

R.B.B.

TROUBLE ANALYSIS DATA

INDEX OF DECODER AND MARKER PUNCHES

PUNCH DESIGNATION	OS	CARD COORDINATION	PUNCH SOURCE	FUNCTIONAL MEANING
MARKER REGISTRATION (Contd.)				
RO	190-1	R4 1	M	REORDER
MARKER REGISTRATION CODE CONVERSION				
CC H $\frac{2}{5}$	195-1	R5 15	M	CODE CONVERSION HUNDREDS
CC HN	195-1	R5 12	M	NO CODE CONVERSION HUNDREDS
CC T $\frac{2}{5}$	195-1	R5 20	M	CODE CONVERSION TENS
CC TN	195-1	R5 13	M	NO CODE CONVERSION TENS
CC U $\frac{2}{5}$	195-1	R5 25	M	CODE CONVERSION UNITS
CC UN	195-1	R5 14	M	NO CODE CONVERSION UNITS
MARKER ROUTE ADVANCE				
OF	202-1	S1 27	M	OVERFLOW
MBR	202-1	S1 28	M	MASTER BUSY ROUTE
ROR	202-1	S1 29	M	REORDER ROUTE
RS1	202-1	S1 25	M	ROUTE SWITCHING
RS3	202-1	S1 26	M	ROUTE SWITCHING
MARKER-SENDER TRANSMITTED CODE CONVERSION				
CC H $\frac{2}{5}$	195-1	R4 15	M	CODE CONVERSION HUNDREDS
CC T $\frac{2}{5}$	195-1	R4 20	M	CODE CONVERSION TENS
CC U $\frac{2}{5}$	195-1	R4 25	M	CODE CONVERSION UNITS
MARKER-SENDER TRANSMITTING				
CDA	193-1	R0 19	M	CONTINUITY AND DIGIT "A" CHECK
CLA	193-1	R0 16	M	FIRST CLASS CHECK
CLB	193-1	R0 17	M	SECOND CLASS CHECK
CLC	193-1	R0 18	M	THIRD CLASS CHECK
DGA	194-1	R0 28	M	DIGIT CONTROL CHECK
HA	195-1	R0 21	M	CODE CONVERSION HUNDREDS CHECK
HB	195-1	R0 22	M	CODE CONVERSION HUNDREDS CHECK

PUNCH DESIGNATION	OS	CARD COORDINATION	PUNCH SOURCE	FUNCTIONAL MEANING
MARKER-SENDER TRANSMITTING (Contd.)				
SKA	194-1	R0 20	M	SKIP CHECK
TA	195-1	R0 23	M	CODE CONVERSION TENS CHECK
TB	195-1	R0 24	M	CODE CONVERSION TENS CHECK
TSA	170-1, 172-1	R0 27	M	TRUNK SELECTED CHECK
UA	195-1	R0 25	M	CODE CONVERSION UNITS CHECK
UB	195-1	R0 26	M	CODE CONVERSION UNITS CHECK
MARKER TIME-OUT				
TM1	219-1	S8 57	M	TIME MEASURE "1"
TM2	219-1	S8 58	M	TIME MEASURE "2"
TM3	219-1	S8 59	M	TIME MEASURE "3"
TMC	218-1	S8 56	M	TIMING CONTROL
MARKER - TC				
0-9	220-1	S7 20	M	MARKER "TC"
MFP SENDER				
0-2	178-1, 220-1	S6 27	MFS	MULTIFREQUENCY SENDER
MS				
MS 0-19	203-1	S6 40	M	MARKER SLEEVE
MS 20-39	203-1	S5 40	M	MARKER SLEEVE
NAC				
NAC	164-1	R8 1	D	NO AREA CODE
NCA				
NCA	166-1	S0 0	D	NO COME AGAIN
NSK				
NSK	164-1, 176-1	R7 9	M	NO SKIP

TROUBLE ANALYSIS DATA

INDEX OF DECODER AND MARKER PUNCHES

PUNCH DESIGNATION	OS	CARD COORDINATION	PUNCH SOURCE	FUNCTIONAL MEANING
OGT APP.				
IT	164-1	S0 4	D	INTERTOLL
ITC	164-1	S0 6	D	INTERTOLL AND TOLL COMPLETING
TC	164-1	S0 5	D	TOLL COMPLETING
OUTGOING FRAME GROUP				
O 0-19	205-1	S1 30	M	OUTGOING FRAME GROUP
OUTGOING SWITCH				
SW 0-9	220-1	S1 50	OL	OUTGOING SWITCH
R6DT				
R6DT	167-1	R0 29	D	RECORDED 6 DIGIT TRANSLATION
RD				
RD	185-1	R6 1	CT	READ RELAY
ROUTING INST.				
RI $\frac{2}{5}$	164-1	R8 20	D	ROUTING INSTRUCTION
SDR. FR. TENS				
TO-9	178-1, 220-1	S6 4	DPS MFS	SENDER FRAME TENS
SDR. FR. UNITS				
UO-9	178-1, 220-1	S6 14	DPS MFS	SENDER FRAME UNITS
SELECT MAGNET				
0-9	206-1, 215-1	S3 30	M	SELECT MAGNET INCOMING PRIMARY BAY
10-19	206-1, 215-1	S3 40	M	SELECT MAGNET INCOMING FIRST PRIMARY EXTENSION BAY
20-29	206-1, 215-1	S3 50	M	SELECT MAGNET INCOMING SECOND PRIMARY EXTENSION BAY
30-39		S2 30	M	SELECT MAGNET INCOMING THIRD PRIMARY EXTENSION BAY

PUNCH DESIGNATION	OS	CARD COORDINATION	PUNCH SOURCE	FUNCTIONAL MEANING
SK3				
SK3	164-1, 176-1	R7 10	M	SKIP "3"
SK6				
SK6	164-1, 176-1	R7 11	M	SKIP "6"
SOURCE OF RECORD				
C	228-1	S8 2	TR	CONTROLLER
CT		S8 6	TR	CONTROLLER TESTING
D	228-1	S8 0	TR	DECODER
DT		S8 3	TR	DECODER TEST
M	228-1	S8 1	TR	MARKER
MT		S8 4	TR	MARKER TEST
TV		S8 5	TR	TRANSLATION VERIFICATION
TB				
TB $\frac{2}{5}$	192-1	S6 35	M	TRUNK BLOCK RELAY
T.B. CONN. OUT. CONN. INC. CONN.				
IC E	208-1	S2 48	M	EVEN
IC O	208-1	S2 49	M	ODD
OC E	207-1	S2 46	M	EVEN
OC O	207-1	S2 47	M	ODD
TBC E	198-1	S2 44	M	EVEN
TBC O	198-1	S2 45	M	ODD
TC				
T 0-2	191-1	S6 30	M	TRUNK BLOCK CONNECTOR TENS
U 0-9	191-1	S5 30	M	TRUNK BLOCK CONNECTOR UNITS
TP				
TP 0-2	164-1	S0 11	M	TRUNK PEG COUNT AND OVERFLOW REGISTER CONTROL

TROUBLE ANALYSIS DATA
INDEX OF DECODER AND
MARKER PUNCHES

RM 3-11 8 SHEETS, SHEET 7

NO. 4A OR 4M TOLL

ORDER AS BSP ITEM MP- 11771

BELL TELEPHONE LABORATORIES, INC.

PRINTED IN U.S.A.

ISSUE 1 | DATE 1-18-52 | DRAWN W.A.D. | CHECKED 2 1-6-54 | R.B.B.

8 SHEETS, SHEET 7

MP-11771

ISSUE	1	WAD	2	[illegible]
DATE	1-18-52	R.B.B.	1-6-54	

TROUBLE ANALYSIS DATA

INDEX OF DECODER AND MARKER PUNCHES

PUNCH DESIGNATION	OS	CARD COORDINATION	PUNCH SOURCE	FUNCTIONAL MEANING
TPC				
TPC	164-1	S0 10	D	THROUGH TRAFFIC PEG COUNT
TRANSLATOR ENGAGED				
EM	178-1	S5 1	CT	TRANSLATOR EMERGENCY
H	178-1	S5 0	CT	TRANSLATOR HOME
T0,1	178-1	S5 2	CT	TRANSLATOR TENS
U0-9	178-1	S5 4	CT	TRANSLATOR UNITS
TRANSMITTED MARKER TO SENDER				
0DG	194-1	R3 11	M	"0" DIGITS
4DG	194-1	R3 12	M	"4" DIGITS
5DG	194-1	R3 13	M	"5" DIGITS
20C	193-1	R3 9	M	20 CYCLE RING (TOLL COMPLETING)
DC	193-1	R3 1	M	DC KEY PULSE
DLC	193-1	R3 7	M	DELAYED LOOP CLOSURE
LPD	193-1	R3 4	M	LOOP DIAL
M	193-1	R3 0	M	MANUAL
MF	193-1	R3 2	M	MULTIFREQUENCY PULSE
NSK	194-1	R3 15	M	NO SKIP
SK3	194-1	R3 16	M	SKIP 3
SK6	194-1	R3 17	M	SKIP 6
SXD	193-1	R3 3	M	SIMPLEX DIAL
SXR	193-1	R3 8	M	SIMPLEX (TOLL COMPLETING)
XDD	193-1	R3 5	M	EXPECT DELAY DIAL
XSG	193-1	R3 6	M	EXPECT STOP-GO

PUNCH DESIGNATION	OS	CARD COORDINATION	PUNCH SOURCE	FUNCTIONAL MEANING
TRUNK BLOCK				
TB $\frac{2}{5}$	164-1	R6 11	D	TRUNK BLOCK RELAY NUMBER
TRUNK BLOCK CONNECTOR				
T0-2	164-1	R6 3	D	TRUNK BLOCK CONNECTOR TENS
U $\frac{2}{5}$	164-1	R6 6	D	TRUNK BLOCK CONNECTOR UNITS
TS				
TS 0-2	164-1	S0 7	D	TRAFFIC SEPARATION
TYPE OF RECORD				
CFR	163-1, 174-1, 179-1	S7 2	D	CARD FAILURE
DSTI	160-1	S7 3	D	SENDER REQUEST FOR TRUNK INDICATION
FIF	206-1, 220-1	S7 0	DM	FRAME IDENTIFICATION FAILURE
MFT	206-1	S7 1	M	MULTIFREQUENCY TRANSFER
MSTI	190-1	S7 4	M	SENDER REQUEST FOR TRUNK INDICATION OR OVER REGISTRATION OF INCOMING CODE.
OGT		S7 9	DM	OUTGOING TRUNK TEST
PRO	181-1	S6 1	D	OVERLOAD ANNOUNCEMENT
RO	160-1, 175-1	S6 0	D	RECORDER
RTRF	171-1	S7 5	D	ROUTE TRANSFER
SDT		S7 7	DM	SENDER TEST
TST		S7 6	M	TEST

TROUBLE ANALYSIS DATA

INDEX OF CONTROLLER PUNCHES

PUNCH DESIGNATION	OS	CARD COORDINATES	PUNCH SOURCE	FUNCTIONAL MEANING
CONTROLLER GROUP				
CG A-F	115-1	R4 30	C	CONTROLLER GROUP
CONTROLLER				
C 0-5	115-1	R4 36	C	CONTROLLER
CONTROLLER CONNECTOR				
CC 0-5	115-1	R4 42	CC	CONTROLLER CONNECTOR
CONTROLLER PROGRESS				
CL 0,1	107-1,107-2	R1 33	C	CL0,1 OPERATED
DTC	109-1,109-2	R1 37	C	DOUBLE TEST CONNECT
FR	113-1	R1 31	C	FRAME RELEASE
GR	106-1	R1 32	C	GROUP RELEASE
HO	112-1,112-2	R1 44	C	HO OPERATED
HM	112-1,112-2	R1 45	C	HM OPERATED
OT	107-1,107-2	R1 35	C	OPERATED TL- OR TU-
OTC	108-1,108-2	R1 38	C	OPERATED TC
PA	110-1	R1 39	C	PRIMARY "A"
PB	110-1	R1 40	C	PRIMARY "B"
PC	107-1,107-2	R1 36	C	PREFERENCE CHANGE
SA	111-1	R1 41	C	SECONDARY "A"
SB	111-1	R1 42	C	SECONDARY "B"
SC	106-1,112-1,112-2	R1 43	C	SLEEVE CONTINUITY
TT	113-1	R1 30	C	TUBE TIMER
CROSS				
GX	105-1	R1 47	C	GROUP LEAD CROSS
HX	108-1,108-2	R1 50	C	HOLD MAGNET LEAD CROSS
PX	110-1	R1 48	C	PRIMARY SELECT LEAD CROSS
SX	111-1	R1 49	C	SECONDARY SELECT LEAD CROSS
DL				
DL	107-1,107-2	R2 59	C	DOUBLE TEST LOWER
DU				
DU	107-1,107-2	R2 58	C	DOUBLE TEST UPPER

PUNCH DESIGNATION	OS	CARD COORDINATES	PUNCH SOURCE	FUNCTIONAL MEANING
LK.FR.-TENS				
LFT $\frac{2}{5}$	115-1	R4 48	SL	LINK FRAME TENS
LK.FR.-UNITS				
LFU $\frac{2}{5}$	115-1	R4 53	SL	LINK FRAME UNITS
PREFERENCE				
PF A	104-1	R2 30	C	PREFERENCE "A"
PF B	104-1	R2 32	C	PREFERENCE "B"
PF C	104-1	R2 34	C	PREFERENCE "C"
PF D	104-1	R2 36	C	PREFERENCE "D"
PF E	104-1	R2 38	C	PREFERENCE "E"
SDR. TYPE				
DP	115-1	R3 56	SL	DIAL PULSE INCOMING SENDER
MFP	115-1	R3 57	SL	MULTIFREQUENCY INCOMING SENDER
OS	115-1	R3 58	SL	OUTGOING SENDER
SEC. SWITCH				
SS A0,1	107-1,107-2	R3 50	C	SECONDARY SWITCH
SS B0,1	107-1,107-2	R3 53	C	SECONDARY SWITCH
SEC. SW. LEVEL				
SSL 0-4	109-1,109-2	R2 50	C	SECONDARY SWITCH LEVEL
TRUNK GROUP				
TG 0-9	105-1	R3 30	C	TRUNK GROUP
TRUNK LEVEL				
TL 0-9	106-1	R3 40	C	TRUNK LEVEL

ISSUE	1	WAD
DATE	1-18-52	

R.B.B.

TROUBLE ANALYSIS DATA

INDEX OF CONTROLLER PUNCHES

NO. 4A TOLL

RM 3-12

MP- 11794

ISSUE	1	ASM
DATE	1-18-52	

R.B.B.

LIST OF ABBREVIATIONS FOR MAJOR CIRCUITS AS USED ON SEQUENCE CHARTS AND OPERATIONAL SKETCHES

ABBREVIATION	CIRCUIT	SD-DRAWING
CC	CONTROLLER CONNECTOR CIRCUIT	68336-01
D	DECODER CIRCUIT	68340-01
DC	DECODER CONNECTOR CIRCUIT	68339-01
ETC	EMERGENCY TRANSLATOR CONNECTOR CIRCUIT	68429-01
GBC	GROUP BUSY CHAIN RELAY CIRCUIT	68420-01
IL	INCOMING LINK AND CONNECTOR CIRCUIT	68393-01
IS) IS-DP)	INCOMING SENDER CIRCUIT - DIAL PULSING	68221-01
IS) IS-MF)	INCOMING SENDER CIRCUIT - MULTIFREQUENCY	68222-01
LC	LINK CONTROLLER CIRCUIT	68028-01
M	MARKER CIRCUIT	68388-01
MC	MARKER CONNECTOR CIRCUIT	68395-01
MTR	MISCELLANEOUS CIRCUIT TROUBLE RECORDER FRAME	68392-01
OL	OUTGOING LINK AND CONNECTOR CIRCUIT	68394-01
OS	OUTGOING SENDER CIRCUIT	68018-01
SL	SENDER LINK AND CONNECTOR CIRCUIT	68334-01
SMB	SENDER MAKE BUSY FRAME CIRCUIT	68386-01
T	CARD TRANSLATOR CIRCUIT	68342-01
DFAT	CARD TRANSLATOR WHEN USED AS DECODER FOREIGN AREA TRANSLATOR	
ET	CARD TRANSLATOR WHEN USED AS EMERGENCY TRANSLATOR	
FAT	CARD TRANSLATOR WHEN USED AS FOREIGN AREA TRANSLATOR	
HT	CARD TRANSLATOR WHEN USED AS HOME TRANSLATOR	
TBC	TRUNK BLOCK CONNECTOR CIRCUIT	68027-01
TRK	TRUNK CIRCUIT	68232-01, 68233-01, etc.

LIST OF ABBREVIATIONS FOR MAJOR CIRCUITS AS USED ON SEQUENCE CHARTS AND OPERATIONAL SKETCHES

NO. 4A TOLL

RM 3-13

TRUNK DESIGNATIONS

CODE	TITLE	CIRCUIT
2IA	TWO-WAY INTERTOLL TRUNK - INCOMING DP, OUTGOING DP, MFP, OR AUTOMATIC - CX SUPERVISION TYPE B	SD-68232-01
2IB	TWO-WAY INTERTOLL TRUNK - INCOMING MFP, OUTGOING DP, MFP, OR AUTOMATIC - CX SUPERVISION TYPE B	SD-68233-01
121A OR 151A	121 OR 151 TRUNK - TOLL SWITCHBOARD NO.3, 3C, OR 3CL	SD-68282-01
121B	121 OR 151 TRUNK - TOLL SWITCHBOARD NO.5	SD-68291-01
131, 141, 181 OR 191	INFORMATION AND ROUTE OPERATOR	SD-68304-01
151B	MB OR 151 TRUNK - TOLL SWITCHBOARD NO.5	SD-68377-01
151C	MB OR 151 TRUNK - TOLL SWITCHBOARD NO.3, 3C, OR 3CL	SD-68441-01
IIA	INCOMING INTERTOLL TRUNK - DIAL PULSING - CX SUPERVISION TYPE B	SD-68135-01
IIB	INCOMING INTERTOLL TRUNK - MF PULSING - CX SUPERVISION TYPE B	SD-68230-01
ITA	INCOMING TRUNK FROM TOLL SWITCHBOARD NO.3, 3C, OR 3CL IN SAME BUILDING - MF PULSING	SD-68237-01
ITB	INCOMING TRUNK FROM TOLL SWITCHBOARD NO.3, 3C, OR 3CL THROUGH POSITION IN SAME BUILDING - MF PULSING	SD-68238-01
ITC	INCOMING TANDEM TRUNK 4-WIRE TALKING - MF PULSING - REVERSE BATTERY SUPERVISION AND SIMPLEX D-C RINGING ON SIGNALING PHANTOM	SD-68290-01
ITD	INCOMING TANDEM TRUNK FROM SWITCHBOARD NO.1, 11, 15C, OR 15D - DIAL PULSING - REVERSE BATTERY SUPERVISION WITH 20-CYCLE RINGING	SD-68315-01
ITE	INCOMING TANDEM TRUNK FROM TOLL SWITCHBOARD NO.1 IN SAME BUILDING - MF PULSING SLEEVE SUPERVISION	SD-68317-01
ITF	INCOMING TANDEM TRUNK FROM NO. 13D, 15C, OR 15D SWITCHBOARD - MF PULSING - REVERSE BATTERY SUPERVISION WITH 20-CYCLE RINGING	SD-68318-01
ITG	INCOMING TRUNK FROM TOLL SWITCHBOARD NO.1 IN SAME BUILDING - MF PULSING, WET-DRY SUPERVISION WITH TRANSMISSION SWITCHING PAD	SD-68322-01
ITJ	INCOMING TRUNK FROM TOLL SWITCHBOARD NO.5 - MF PULSING	SD-68348-01
ITK	INCOMING TRUNK FROM TOLL TEST BOARD NO.17C TO THE INCOMING LINK FRAMES	SD-68141-01
ITL	INCOMING TANDEM TRUNK FROM NO.1 SWITCHBOARD - THROUGH TYPE - DIAL PULSING	SD-68375-01
ITM	INCOMING TANDEM TRUNK FROM NO.1 SWITCHBOARD - TERMINAL TYPE - DIAL PULSING	SD-68376-01
ITR	INCOMING TANDEM TRUNK FROM NO.1 SWITCHBOARD - MF PULSING - TYPE A CORDS	SD-68369-01
ITS	INCOMING TANDEM TRUNK FROM NO.1 SWITCHBOARD - REVERSE BATTERY SUPERVISION	SD-68358-01
ITT	INCOMING TRUNK FROM NO.5 SWITCHBOARD - MF OR DC PULSING	SD-68292-01
ITU	INCOMING TANDEM TRUNK - DIAL PULSING - REVERSE BATTERY SUPERVISION	SD-68357-01
ITW	INCOMING TOLL TANDEM TRUNK - DIAL PULSING - CX SUPERVISION TYPE B	SD-68135-01

TRUNK DESIGNATIONS

RM 3-14 3 SHEETS, SHEET 1

NO. 4A TOLL

ORDER AS BSP ITEM MP- 11793

BELL TELEPHONE LABORATORIES, INC.

PRINTED IN U.S.A.

MP- 11793 3 SHEETS, SHEET 1

ISSUE 1 ASM
DATE 1-18-52
R.B.B.

MP- 11793

ISSUE	1	ASM
DATE	1-18-52	

R.8.8

TRUNK DESIGNATIONS

CODE	TITLE	CIRCUIT
ITY	INCOMING INTERTOLL TRUNK - MF PULSING - CX SUPERVISION TYPE B	SD-68230-01
ODA	OUTGOING TRUNK TO DESKS	SD-68332-01
OIA	OUTGOING INTERTOLL TRUNK - DP, MFP, OR AUTOMATIC - CX SUPERVISION TYPE B	SD-68231-01
OIB	OUTGOING INTERTOLL TRUNK AUXILIARY FOR USE WITH RINGDOWN INTERTOLL TRUNK CIRCUIT IN TOLL SWITCHBOARD NO. 3, 3C, OR 3CL	SD-68234-01
OIC	OUTGOING INTERTOLL TRUNK - RINGDOWN	SD-68260-01
OID	OUTGOING INTERTOLL TRUNK AUXILIARY FOR USE WITH RINGDOWN INTERTOLL TRUNK CIRCUIT IN TOLL SWITCHBOARD NO.1	SD-68364-01
OSA	OUTGOING TRUNK - TOLL SWITCHING DP, WET-DRY SUPERVISION - AUTOMATIC START RINGING TO REPEATED DIAL TOLL TRAIN OR COMBINATION LOOP AND REPEATED DIAL TOLL TRAIN	SD-68240-01
OSB	OUTGOING TRUNK TOLL SWITCHING - DP, MFP, OR SF WET-DRY, HIGH-LOW OR REVERSE BATTERY SUPERVISION	SD-68242-01
OSC	OUTGOING TRUNK TOLL SWITCHING - RP, PCI, OR DP, WET-DRY OR REVERSE BATTERY SUPERVISION	SD-68326-01
OSD	OUTGOING TRUNK TOLL SWITCHING - EQUIPPED WITH REPEATER, RP OR PCI PULSING, WET-DRY OR REVERSE BATTERY SUPERVISION	SD-68366-01
OSE	OUTGOING TRUNK AUXILIARY - REVERSE BATTERY SUPERVISION FOR USE WITH 2-WAY OPERATOR'S OFFICIAL TRUNK IN SAME BUILDING	SD-68371-01
OSF	OUTGOING TRUNK AUXILIARY - CX SUPERVISION FOR USE WITH 2-WAY OPERATOR'S OFFICIAL TRUNK IN SAME BUILDING	SD-68378-01

CODE	TITLE	CIRCUIT
OTA	OUTGOING TRUNK TO TOLL TANDEM SWITCHBOARD NO.1 IN SAME BUILDING - TOLL TANDEM STRAIGHTFORWARD	SD-68320-01
OTB	OUTGOING TRUNK TOLL TANDEM, MFP OR SF 4-WIRE TALKING - REVERSE BATTERY SUPERVISION AND SIMPLEX D-C RINGING ON SIGNALING PHANTOM	SD-68309-01
OTC	OUTGOING TRUNK TOLL TANDEM SWITCHBOARD IN SAME BUILDING - TOLL TANDEM STRAIGHTFORWARD	SD-68321-01
OTD	OUTGOING TRUNK TOLL TANDEM TO TOLL SWITCHBOARD NO.1B OR 3B IN SAME BUILDING	SD-68367-01
OXA	OUTGOING TRUNK TO TOLL SWITCHBOARD NO.3, 3C, OR 3CL IN SAME BUILDING - TX WITH TRANSMISSION SWITCHING PAD	SD-68282-01
OXB	OUTGOING TRUNK - TX OR COMBINED TX AND TOLL SWITCHING DP, MFP, OR AUTOMATIC - REVERSE BATTERY SUPERVISION - ARRANGED FOR SIMPLEX D-C RERING	SD-68239-01
OXC	OUTGOING TRUNK TX - 4-WIRE TALKING - REVERSE BATTERY SUPERVISION AND SIMPLEX D-C RINGING ON SIGNALING PHANTOM	SD-68289-01
OXD	OUTGOING TRUNK TO TOLL SWITCHBOARD NO.3, 3C, OR 3CL IN SAME BUILDING - TX	SD-68304-01
OXE	OUTGOING TRUNK TO TOLL SWITCHBOARD NO.1, IN SAME BUILDING - TX - SLEEVE SUPERVISION	SD-68305-01
OXF	OUTGOING TRUNK TO TOLL SWITCHBOARD NO.1 IN SAME BUILDING - TX WITH TRANSMISSION SWITCHING PAD, WET-DRY SUPERVISION	SD-68306-01
OXG	OUTGOING TRUNK - TX, WET-DRY SUPERVISION TO TOLL SWITCHBOARD NO.1 IN SAME BUILDING EQUIPPED WITH A CORDS	SD-68368-01
OXK	OUTGOING TRUNK - TX, RINGDOWN SUPERVISION TO TOLL SWITCHBOARD NO.1 IN SAME BUILDING	SD-68417-01

MP- 11793

TRUNK DESIGNATIONS

CODE	TITLE	CIRCUIT
	MISCELLANEOUS	
100	TEST LINE (BALANCE AND NOISE)	SD-68299-01
101	OUTGOING TRUNK TO 17C TESTBOARD	SD-68299-01
102 OR 959	TEST LINE TO MILLIWATT SUPPLY	SD-68095-01
103	TEST LINE TRUNK (RINGING FEATURE)	SD-68399-01
DQ	DELAY QUOTE TRUNK	SD-68056-01
MB	MASTER BUSY	SD-68083-01
MBT	MASTER BUSY TRAINING	SD-68083-01
OFLA	OVERFLOW TRUNK AND OVERFLOW TRUNK CONTROL CIRCUIT	SD-68420-01
OFLT	OVERFLOW TRAINING	SD-68083-01
RO	REORDER TRUNK	SD-68247-01
ROM	REORDER MONITOR AT TOLL SWITCHBOARD NO.5	SD-68249-01
ROMB	REORDER MONITOR AT TOLL SWITCHBOARD NO.3, 3C, OR 3CL	SD-68438-01

NOTES:

1. THE FIRST LETTER OR NUMERAL INDICATES DIRECTION, AS FOLLOWS:
   - I - INCOMING
   - O - OUTGOING
   - 2 - TWO-WAY
2. THE SECOND LETTER INDICATES THE TYPE OF TRUNK, AS FOLLOWS:
   - I - INTERTOLL
   - T - TANDEM
   - X - TX
   - S - TOLL SWITCHING
3. THE THIRD LETTER INDICATES A PARTICULAR SD NUMBER IN ORDER TO DIFFERENTIATE BETWEEN SIMILAR TYPES OF TRUNKS.

ISSUE	1	ASM
DATE	1-18-52	R.B.B.

ABBREVIATIONS FOR CLASS 1 OFFICES

ABBR.	OFFICE
ABER	Aberdeen, S.D.
AKR	Akron, O.
ALBY	Albany, N.Y.
ALBQ	Albuquerque, N.M.
ALTWN	Allentown, Pa.
ALNC	Alliance, O.
ATOON	Altoona, Pa.
AMAR	Amarillo, Tex.
AND	Anderson, Ind.
ANNP	Annapolis, Md.
ANN	Ann Arbor, Mich.
APPL	Appleton, Wis.
A PK	Asbury Park, N.J.
ASVL	Asheville, N.C.
ASHD	Ashland, Ky.
ASHTA	Ashtabula, O.
ATLA	Atlanta, Ga.
A CY	Atlantic City, N.J.
AUB-I	Auburn, Ind.
AUB-N	Auburn, N.Y.
AUG	Augusta, Ga.
BALT	Baltimore, Md.
BANG	Bangor, Me.
BT RU	Baton Rouge, La.
B CK	Battle Creek, Mich.
B HR	Benton Harbor, Mich.
BLG	Billings, Mont.
BNGTN	Binghamton, N.Y.
BHAM	Birmingham, Ala.
BIS	Bismarck, N.D.
BLM-IL	Bloomington, Ill.
BLM-IN	Bloomington,
BLUE	Bluefield, W.Va.
BSE	Boise, Ida.
BOS	Boston, Mass.
BRFD	Bradford, Pa.
BPT	Bridgeport, Conn.
BRIS-C	Bristol, Conn.
BRIS-T	Bristol, Tenn.
BUF	Buffalo, N.Y.
BURL-I	Burlington, Ia.
BURL-V	Burlington, Vt.
BTE	Butte, Mont.

ABBR.	OFFICE
CAL	Calgary, Alta.
C T S	*Cambridge, T.S.,O.
CNAN	Canaan, Conn.
CANT	Canton, O.
CPR	Casper, Wyo.
CED R	Cedar Rapids, Ia.
CENT	Centralia, Ill.
CHAM	Champaign, Ill.
CHAS-S	Charleston, S.C.
CHAS-W	Charleston,W.Va.
CHLOT	Charlotte, N.C.
CHARVL	Charlottesville,Va.
CHATT	Chattanooga, Tenn.
CGO	Chicago, Ill.
CIN	Cincinnati, O.
CLKSBG	Clarksburg, W.Va.
CLEV	Cleveland, O.
CLIN	Clinton, Ia.
CLBA	Columbia, S.C.
COLS	Columbus, O.
C CH	Corpus Christi,Tex.
COVI	Covington, Va.
CUMB	Cumberland, Md.
DLS	Dallas, Tex.
DANB	Danbury, Conn.
DANV-I	Danville, Ill.
DANV-V	Danville, Va.
DVPT	Davenport, Ia.
DAYT	Dayton, O.
DEC	Decatur, Ill.
DNVR	Denver, Colo.
DES M	Des Moines, Ia.
DET	Detroit, Mich.
DODGE	Dodge City,Kans.
DBQ	Dubuque, Ia.
DULH	Duluth, Minn.
DNK	Dunkirk, N.Y.
DHAM	Durham, N.C.
ESTN	Easton, Pa.
EU CL	Eau Claire, Wis.
ELK	Elkhart, Ind.

ABBR.	OFFICE
ELMI	Elmira, N.Y.
EL P	El Paso, Tex.
ERIE	Erie, Pa.
EVSVL	Evansville, Ind.
FRMT	Fairmont, W.Va.
F RIV	Fall River, Mass.
FGO	Fargo, N.D.
FDLY	Findlay, O.
FLT	Flint, Mich.
FLRC	Florence, S.C.
F DU L	Fond du Lac, Wis.
FT D	Fort Dodge, Ia.
FT SM	Fort Smith, Ark.
FT WN	Fort Wayne, Ind.
FT WH	Fort Worth, Tex.
FRED	Frederick, Md.
FR LK	French Lick, Ind.
GALES	Galesburg, Ill.
G CY	Garden City, N.Y.
GARY	Gary, Ind.
GL F	Glens Falls, N.Y.
GLBO	Goldsboro, N.C.
G IS	Grand Island, Neb.
G RPS	Grand Rapids, Mich.
GT BN	Great Barrington, Mass.
GT FS	Great Falls, Mont.
GN BY	Green Bay, Wis.
GNFD	Greenfield, Mass.
GNBO	Greensboro, N.C.
GNVL	Greenville, S.C.
HGRSTN	Hagerstown, Md.
HFX	Halifax, N.S.
HAM-O	Hamilton, O.
HAM-ON	Hamilton, Ont.
HAMD	Hammond, Ind.
HBG	Harrisburg, Pa.
HFD	Hartford, Conn.
HZTN	Hazelton, Pa.

ABBR.	OFFICE
HLN	Helena, Mont.
H PK	Highland Park, Ill.
HLND	Holland, Mich.
H S	Hot Springs, Ark.
HOUS	Houston, Tex.
HTGTN	Huntington, W.Va.
IPLS	Indianapolis, Ind.
IA CY	Iowa City, Ia.
ITH	Ithaca, N.Y.
JKN-MH	Jackson, Mich.
JKN-MS	Jackson, Miss.
JKVL	Jacksonville, Fla.
JMTN	Jamestown, N.Y.
JNVL	Janesville, Wis.
JNTN	Johnstown, Pa.
JOL	Joliet, Ill.
KZOO	Kalamazoo, Mich.
KANE	Kane, Pa.
K C	Kansas City, Mo.
KENO	Kenosha, Wis.
KEO	Keokuk, Ia.
KGTN	Kingston, N.Y.
KXVL	Knoxville, Tenn.
KOK	Kokomo, Ind.
L CRS	La Crosse, Wis.
LA F	La Fayette, Ind.
LANC	Lancaster, Pa.
LANS	Lansing, Mich.
LEX	Lexington, Ky.
LIMA	Lima, O.
LINC	Lincoln, Neb.
L R	Little Rock, Ark.
LGPT	Logansport, Ind.
LOR	Lorain, O.
L A	Los Angeles, Calif.
LSVL	Louisville, Ky.
LYNCH	Lynchburg, Va.

ABBR.	OFFICE
MCN	Macon, Ga.
MDSN	Madison, Wis.
MANS	Mansfield, O.
MRETA	Marietta, O.
MRON-I	Marion, Ind.
MRON-O	Marion, O.
MARQ	Marquette, Mich.
MTOWN	Marshalltown, Ia.
MA CY	Mason City, Ia.
MDVL	Meadville, Pa.
MEMP	Memphis, Tenn.
MERD	Meriden, Conn.
MMI	Miami, Fla.
MICH CY	Michigan City, Ind.
MDTN-C	Middletown, Conn.
MDTN-N	Middletown, N.Y.
MILW	Milwaukee, Wis.
MPLS	Minneapolis, Minn.
MINOT	Minot, N.D.
MOBI	Mobile, Ala.
MRO-L	Monroe, La.
MRO-M	Monroe, Mich.
MTG	Montgomery, Ala.
MONTI	Monticello, N.Y.
MTRL	Montreal, Que.
MORGN	Morgantown, W.Va.
MRSTN	Morristown, N.J.
MT V	Mount Vernon, N.Y.
MUN	Muncie, Ind.
MUSK	Muskegon, Mich.
MSKGE	Muskogee, Okla.
NHVL	Nashville, Tenn.
NWRK	Newark, N.J.
N BED	New Bedford, Mass.
N BTN	New Britain, Conn.
N BWK	New Brunswick, N.J.
NWB	Newburgh, N.Y.
N CAS	New Castle, Pa.
N HN	New Haven, Conn.
N LN	New London, Conn.
N O	New Orleans, La.
NEWP	Newport, R.I.
N NEWS	Newport News, Va.
N.Y	New York, N.Y.
NIA	Niagara Falls, N.Y.

*Test Station

ISSUE 1 ASM
DATE 1-18-52
R.B.B.

2 SHEETS, SHEET 1

MP- 11711

ABBREVIATIONS FOR
CLASS 1 OFFICES

RM 3-15 2 SHEETS, SHEET 1

NO. 4A TOLL

BELL TELEPHONE LABORATORIES, INC.

ORDER AS BSP ITEM MP- 11711

PRINTED IN U.S.A.

ISSUE	1	ASM
DATE	1-18-52	
	R.B.B.	

ABBREVIATIONS FOR CLASS 1 OFFICES (Contd.)

ABBR.	OFFICE
NORF-N	Norfolk, Neb.
NORF-V	Norfolk, Va.
N AD	North Adams, Mass.
NHAM	Northampton, Mass.
NORT	Norton, Va.
NWLK	Norwalk, Conn.
NWCH	Norwich, Conn.
OAK	Oakland, Calif.
OIL C	Oil City, Pa.
OK CY	Oklahoma City, Okla.
OLEAN	Olean, N.Y.
OMA	Omaha, Neb.
ORL	Orlando, Fla.
OTWA	Ottawa, Ont.
OTUM	Ottumwa, Ia.
PDUC	Paducah, Ky.
PKBG	Parkersburg, W.Va.
PAT	Paterson, N.J.
PEEK	Peekskill, N.Y.
PEOR	Peoria, Ill.
PTRBG	Petersburg, Va.
PTKY	Petoskey, Mich.
PHLA	Philadelphia, Pa.
PNX	Phoenix, Ariz.
PITB	Pittsburgh, Pa.
PTFD	Pittsfield, Mass.
PLAT	Plattsburg, N.Y.
POCA	Pocatello, Ida.
PON	Pontiac, Mich.
PT HN	Port Huron, Mich.
PTLD-M	Portland, Me.
PTLD-O	Portland, Ore.
PORTS	Portsmouth, O.
POUGH	Poughkeepsie, N.Y.
PRCT	Prescott, Ariz.
PROV	Providence, R.I.
QUE	Quebec, Que.
QCY	Quincy, Ill.

ABBR.	OFFICE
RAC	Racine, Wis.
RLGH	Raleigh, N.C.
RPD CY	Rapid City, S.D.
RDG	Reading, Pa.
REG	Regina, Sask.
RENO	Reno, Nev.
RHINE	Rhinelander, Wis.
RICH-I	Richmond, Ind.
RICH-V	Richmond, Va.
ROAN	Roanoke, Va.
ROCH-M	Rochester, Minn.
ROCH-N	Rochester, N.Y.
ROCH-P	Rochester, Pa.
RKFD	Rockford, Ill.
R I	Rock Island, Ill.
RUTL	Rutland, Vt.
SAC	Sacramento, Calif.
SAG	Saginaw, Mich.
ST J	Saint John, N.B.
ST JO	St. Joseph, Mo.
ST L	St. Louis, Mo.
ST P	St Paul, Minn.
ST PBG	St. Petersburg, Fla.
SAL	Salem, Mass.
SLNA	Salina, Kans.
SALIS	Sallisbury, Md.
S LK	Salt Lake City, Utah
S A	San Antonio, Tex.
S D	San Diego, Calif.
SDKY	Sandusky, O.
S F	San Francisco, Calif.
ST S	Saratoga Springs, N.Y.
SVAN	Savannah, Ga.
SAYB	Saybrook, Conn.
SCDY	Schenectady, N.Y.
SCRN	Scranton, Pa.
SEAT	Seattle, Wash.
SHRN	Sharon, Pa.
SHRV	Shreveport, La.
SID	Sidney, Neb.
SX CY	Sioux City, Ia.

ABBR	OFFICE
SX FS	Sioux Falls, S.D.
S BD	South Bend, Ind.
SPBG	Spartanburg, S.C.
SPO	Spokane, Wash.
SPFD-I	Springfield, Ill.
SPFD-M	Springfield, Mass.
SPFD-MO	Springfield, Mo.
SPFD-O	Springfield, O.
STAM	Stamford, Conn.
STN	Staunton, Va.
STEUB	Steubenville, O.
S PT	Stevens Point, Wis.
SDBG	Stroudsburg, Pa.
SYR	Syracuse, N.Y.
TPA	Tampa, Fla.
T HT	Terre Haute, Ind.
TOL	Toledo, O.
TOP	Topeka, Kans.
TORO	Toronto, Ont.
TORR	Torrington, Conn.
TREN	Trenton, N.J.
TRND	Trinidad, Colo.
TROY	Troy, N.Y.
TSN	Tucson, Ariz.
TULSA	Tulsa, Okla.
UTI	Utica, N.Y.
VAN	Vancouver, B.C.
VICK	Vicksburg, Miss.
VINC	Vincennes, Ind.
WRN-O	Warren, O.
WRN-P	Warren, Pa.
WASH-DC	Washington, D.C.
WASH-P	Washington, Pa.
WBY	Waterbury, Conn.
WLOO	Waterloo, Ia.
WTWN	Watertown, N.Y.

ABBR.	OFFICE
WKN	Waukegan, Ill.
W P B	West Palm Beach, Fla.
WHLG	Wheeling, W. Va.
WH P	White Plains, N.Y.
W R JC	White River Jct., Vt.
WICH	Wichita, Kans.
WC FS	Wichita Falls, Tex.
WK BR	Wilkes Barre, Pa.
WMPT	Williamsport, Pa.
WMTC	Willimantic, Conn.
WILM	Wilmington, Del.
WPG	Winnipeg, Man.
W SAL	Winston-Salem, N.C.
WORC	Worcester, Mass.
YORK	York, Pa.
YGTN	Youngstown, O.
ZAN	Zanesville, O.

NOTE: The above abbreviations are for class 1 offices and are assigned by the Long Lines Department. Abbreviations for other offices are assigned by the associated companies who keep the Long Lines Department informed.

BELL TELEPHONE LABORATORIES, INC.

NO. 4A TOLL

ABBREVIATIONS FOR CLASS 1 OFFICES

2 SHEETS, SHEET 2 RM 3-15

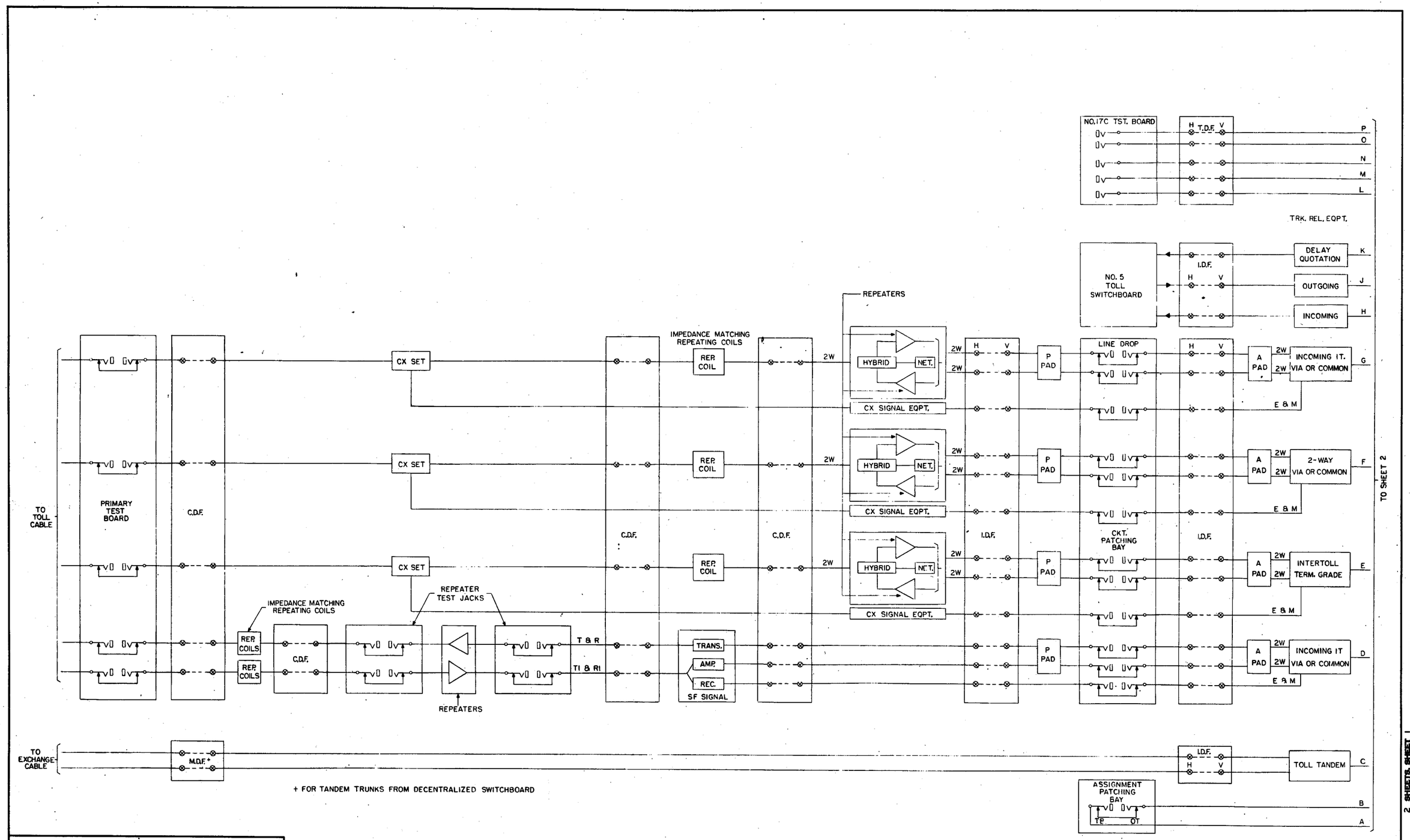

+ FOR TANDEM TRUNKS FROM DECENTRALIZED SWITCHBOARD

ISSUE	1	A.S.A. & R.S.
DATE		2-21-52

2 SHEETS, SHEET 1

MP-11795

TYPICAL EQUIPMENT LAYOUT
TWO-TRAIN OFFICE WITH
INTERTOLL AND TOLL COMPLETING TRAINS

RM 3-16

2 SHEETS, SHEET 1

NO. 4A TOLL

ORDER AS BSP ITEM MP-11795

BELL TELEPHONE LABORATORIES, INC.

PRINTED IN U. S. A.

MP-11795

2 SHEETS, SHEET 2

ISSUE	DATE
1	2-21-58

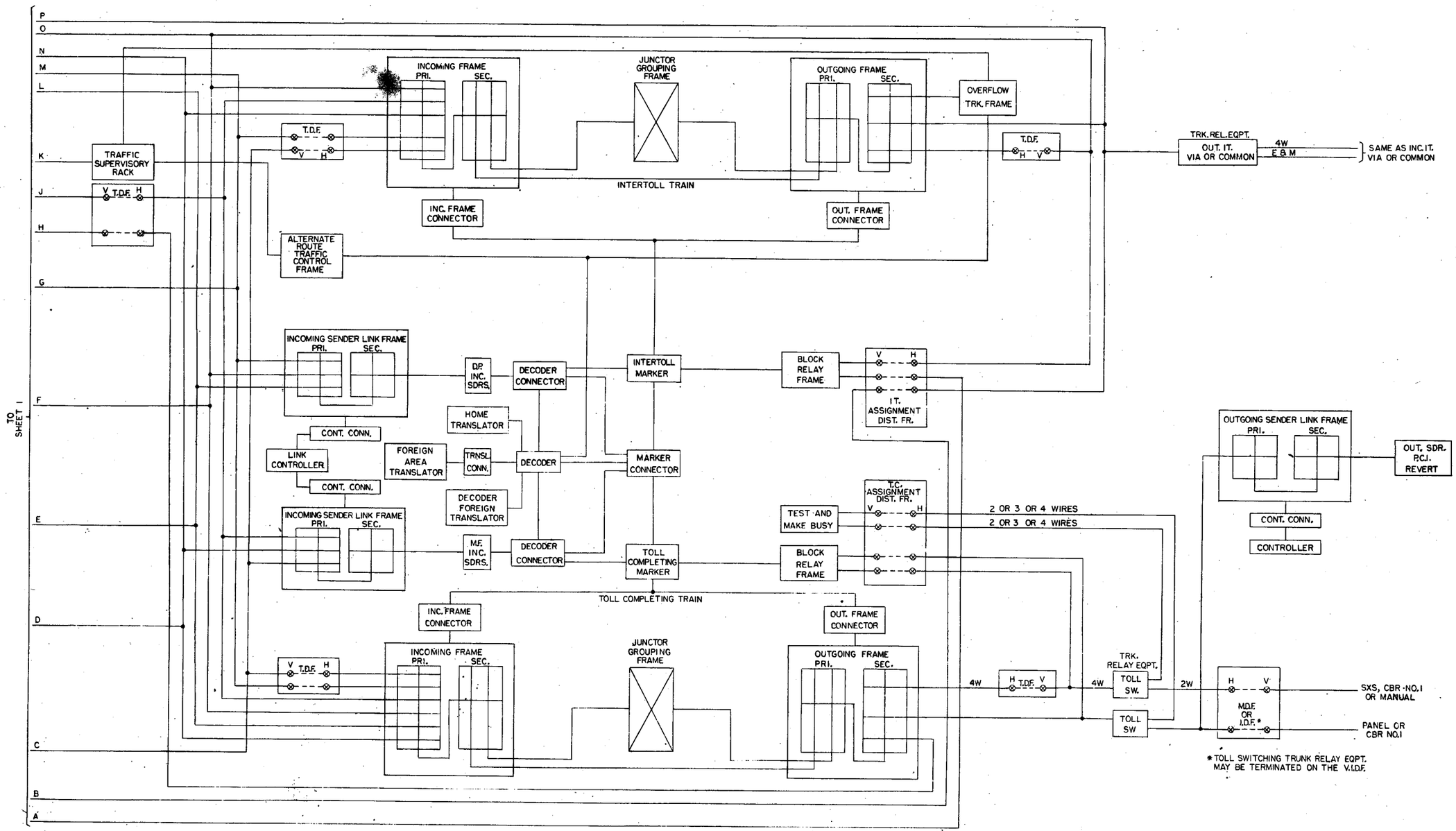

TYPICAL EQUIPMENT LAYOUT TWO TRAIN-OFFICE WITH INTERTOLL AND TOLL COMPLETING TRAINS

NO. 4A TOLL

2 SHEETS, SHEET 2

RM 3-16

BELL TELEPHONE LABORATORIES, INC.
PRINTED IN U. S. A.

ORDER AS BSP ITEM MP-11795