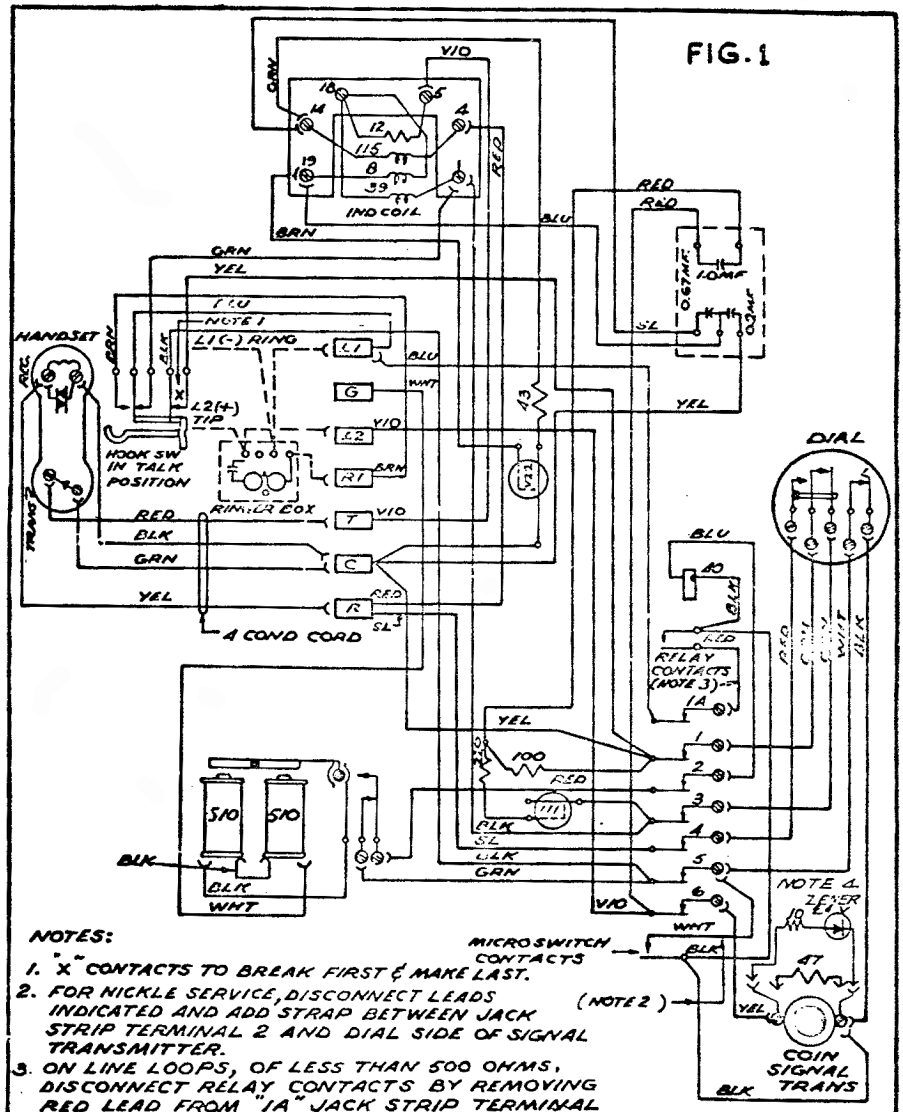

NOTES:

1. "X" CONTACTS TO BREAK FIRST & MAKE LAST.
2. FOR NICKLE SERVICE, DISCONNECT LEADS INDICATED AND ADD STRAP BETWEEN JACK STRIP TERMINAL 2 AND DIAL SIDE OF SIGNAL TRANSMITTER.
3. ON LINE LOOPS, OF LESS THAN 500 OHMS, DISCONNECT RELAY CONTACTS BY REMOVING RED LEAD FROM "1A" JACK STRIP TERMINAL AND TAPING.
4. THE RESISTOR-ZENER DIODE ASS'Y IS OPTIONAL IN PLACE OF THE 47Ω RES.

6262	GENERAL TELEPHONE COMPANY OF CALIFORNIA	DR. LLK DATE 11-9-61	WIRING DIAG., TYPE LF3 82-55	
		APP. DATE 11-22-61	SH. NO. 4 SED 4087	SH. 15